CONTRACT DOCUMENTS

AND

TECHNICAL SPECIFICATIONS

FOR THE

CAESARS LANE
WASTEWATER TREATMENT PLANT EXPANSION
PHASE 2 PROJECT

TOWN OF NEW WINDSOR
ORANGE COUNTY, NEW YORK

PREPARED FOR:
Town of New Windsor
555 Union Avenue
New Windsor, NY 12553

PREPARED BY:
MHE Engineering, D.P.C.
111 Wheatfield Drive, Suite 1
Milford, PA 18337

NOTE: ANY UNAUTHORIZED ALTERATION OR ADDITION TO THIS DOCUMENT IS A VIOLATION OF SECTION 7209(2) OF THE NEW YORK STATE EDUCATION LAW.

DATE: 18 April 2025
JOB #: 18-732

NEW YORK OFFICE
33 Airport Center Drive, Suite 202, New Windsor, NY 12553
845-567-3100 | F: 845-567-3232 | mheny@mhepc.com

PENNSYLVANIA OFFICE
111 Wheatfield Drive, Suite 1, Milford, PA 18337
570-296-2765 | F: 570-296-2767 | mhepa@mhepc.com

TABLE OF CONTENTS

TITLE	DOCUMENT NUMBER
ADVERTISEMENT FOR BIDS	C-111
INSTRUCTION TO BIDDERS	C-200
BID FORM: CONTRACT GC-1 GENERAL CONSTRUCTION	C-410
AFFIDAVIT OF COMPLIANCE WITH NEW YORK STATE ANTI-SEXUAL HARASSMENT LAWS	C-410A
WICKS LAW FORM	
NEW YORK PREVAILING WAGE RATES	
BID BOND	C-430
QUALIFICATION STATEMENT	C-451
NOTICE OF AWARD	C-510
AGREEMENT BETWEEN OWNER AND CONTRACTOR	C-520
PERFORMANCE BOND	C-610
PAYMENT BOND	C-615
NOTICE TO PROCEED	C-550
STANDARD GENERAL CONDITIONS	C-700
SUPPLEMENTARY CONDITIONS	C-800
CONTRACTOR'S APPLICATION FOR PAYMENT	C-620
WORK CHANGE DIRECTIVE	C-940
CHANGE ORDER	C-941
FIELD ORDER	C-942
CERTIFICATE OF SUBSTANTIAL COMPLETION	C-625
NOTICE OF ACCEPTABILITY OF WORK	C-626

EXHIBITS:

EXHIBIT A: EFC Mandatory State Financial Assistance Terms and Conditions

EXHIBIT B: Pre-Construction Survey Report for Asbestos-Containing Materials (ACM) Lead-Based Paints (LBP) Polychlorinated Biphenyl (PCB) Prepared By QuES&T and Pre-Demolition/Pre-Renovation Inspection for Asbestos-Containing Materials (ACM) Prepared By QuES&T

EXHIBIT C: Section 028300 Lead Safe Work Practices Specification and Section 028200 Asbestos Abatement Specification

EXHIBIT D: Geotechnical Investigation Proposed Improvements To Caesars Lane Waste Water Treatment Plant Prepared by Tectonic

EXHIBIT E: Stormwater Pollution Prevention Plan (SWPPP) for Caesars Lane Wastewater Treatment Plant Expansion Project Prepared by MHE Engineering

EXHIBIT F: Bid Plans For Caesars Lane WWTP Expansion Project: Phase 1

EXHIBIT G: Project Labor Agreement Covering Construction of the Caesars Lane WWTP Expansion Project Phase II

EXHIBIT H: Aqualogics Proposal

EXHIBIT I: Assigned Procurement Contract – Veolia Water Technologies & Solutions (F.K.A. Suez WTS USA, Inc.)

EXHIBIT J: Additional Scope Change Order Proposal – Veolia Water Technologies & Solutions (F.K.A. Suez WTS USA, Inc.)

EXHIBIT K: Veolia Water Technologies & Solutions (F.K.A. Suez WTS USA, Inc.) Contract Escalation Package

EXHIBIT L: D-BEN Security Systems, Inc. – List of Equipment and Quote

EXHIBIT M: NYSDEC Existing Outfall Abandonment Permit

EXHIBIT N: NYSDEC New Outfall Permit

EXHIBIT O: NYSDEC SPDES Discharge Permit

EXHIBIT P : Veolia Design Package

SPECIFICATIONS TABLE OF CONTENTS

Division	Section Title

SPECIFICATIONS GROUP

General Requirements Subgroup

DIVISION 01 - GENERAL REQUIREMENTS

011000 SUMMARY
013000 ADMINISTRATIVE REQUIREMENTS
013100 PROJECT MANAGEMENT AND COORDINATION
013233 PHOTOGRAPHIC DOCUMENTATION
013300 SUBMITTAL PROCEDURES
014000 QUALITY REQUIREMENTS
014535 CODE-REQUIRED SPECIAL INSPECTIONS AND PROCEDURES (NY)
015000 TEMPORARY FACILITIES AND CONTROLS
015500 MAINTENANCE AND PROTECTION OF TRAFFIC
015800 NEW YORK STATE ENVIRONMENTAL FACILITIES CORPORATION FINANCING SIGNAGE
016000 PRODUCT REQUIREMENTS
017300 EXECUTION
017419 CONSTRUCTION WASTE MANAGEMENT AND DISPOSAL
017700 CLOSEOUT PROCEDURES
017823 OPERATION AND MAINTENANCE DATA
017839 PROJECT RECORD DOCUMENTS
017900 DEMONSTRATION AND TRAINING

Facility Construction Subgroup

DIVISION 02 – EXISTING CONDITIONS

024116 STRUCTURE DEMOLITION
024119 SELECTIVE DEMOLITION

DIVISION 03 – CONCRETE

030130 MAINTENANCE OF CAST-IN-PLACE CONCRETE
031000 CONCRETE FORMING AND ACCESSORIES
032000 CONCRETE REINFORCING
033000 CAST-IN-PLACE CONCRETE
033110 CONTROLLED DENSITY FILL
034100 PRECAST STRUCTURAL CONCRETE
034110 PRESTRESSED HOLLOW-CORE PLANK
035300 CONCRETE TOPPING
036200 GROUT

DIVISION 04 - MASONRY

040110	MASONRY CLEANING
040120.64	BRICK AND UNIT MASONRY REPOINTING
042000	UNIT MASONRY
042613	MASONRY VENEER

DIVISION 05 – METALS

051200	STRUCTURAL STEEL
052100	STEEL JOIST FRAMING
053100	STEEL DECKING
054000	COLD-FORMED METAL FRAMING
054400	COLD-FORMED METAL TRUSSES
055000	METAL FABRICATIONS
055119	METAL GRATING STAIRS
055210	ALUMINUM HANDRAILS
055213	PIPE AND TUBE RAILINGS
055901	STANDARD-DUTY ALUMINUM INTERLOCKING FLAT PANEL TANK COVER
055902	HEAVY DUTY ALUMINUM TANK COVERS

DIVISION 06 – WOOD, PLASTICS AND COMPOSITES

061000	ROUGH CARPENTRY
061600	SHEATHING
062023	INTERIOR FINISH CARPENTRY
064113	WOOD-VENEER-FACED ARCHITECTURAL CABINETS
066400	PLASTIC PANELING

DIVISION 07 - THERMAL AND MOISTURE PROTECTION

071616	CRYSTALLINE WATERPROOFING
072100	THERMAL INSULATION
072119	FOAMED-IN-PLACE INSULATION
072500	WEATHER BARRIERS
074113.16	STANDING-SEAM METAL ROOF PANELS
074213.13	FORMED METAL WALL PANELS
074293	SOFFIT PANELS
074646	FIBER-CEMENT SIDING
075323	ETHYLENE-PROPYLENE-DIENE-MONOMER
076200	SHEET METAL FLASHING AND TRIM
077100	ROOF SPECIALTIES
077200	ROOF ACCESSORIES
077253	SNOW GUARDS
078413	PENETRATION FIRESTOPPING
079100	PERFORMED JOINT SEALS

079200	JOINT SEALANTS

DIVISION 08 - OPENINGS

081113	HOLLOW METAL DOORS AND FRAMES
081416	FLUSH WOOD DOORS
081613	FIBERGLASS DOORS AND FRAMES
083113	ACCESS DOORS AND FRAMES
083323	OVERHEAD COILING DOORS
083613	SECTIONAL DOORS
084113	ALUMINUM-FRAMED ENTRANCES AND STOREFRONTS
085113	ALUMINUM WINDOWS
087100	DOOR HARDWARE
088000	GLAZING
088113.1	DECORATIVE GLAZING FILM
089119	FIXED LOUVERS

DIVISION 09 - FINISHES

092900	GYPSUM BOARD
093013	CERAMIC TILING
095123	ACOUSTICAL TILE CEILINGS
096513	RESILIENT BASE AND ACCESSORIES
096519	RESILIENT TILE FLOORING
098116	ACOUSTIC BLANKET INSULATION
099113	EXTERIOR PAINTING
099123	INTERIOR PAINTING
099600	HIGH PERFORMANCE COATINGS

DIVISION 10 - SPECIALTIES

101423.16	ROOM-IDENTIFICATION PANEL SIGNAGE
102113.19	PLASTIC TOILET COMPARTMENTS
102123	CUBICLE CURTAINS AND TRACK
102800	TOILET, BATH, AND LAUNDRY ACCESSORIES
104413	FIRE PROTECTION CABINETS
104416	FIRE EXTINGUISHERS
105113	METAL LOCKERS
107316	CANOPIES

DIVISION 12 - FURNISHINGS

123553.13	METAL LABORATORY CASEWORK
123640	STONE COUNTERTOPS
124813	ENTRANCE FLOOR MATS AND FRAMES

DIVISION 13 – SPECIAL CONSTRUCTION

133419 METAL BUILDING SYSTEMS

DIVISION 14 – CONVEYING EQUIPMENT

146001 CRANES & HOISTS

DIVISION 22 - PLUMBING

220510 BASIC PLUMBING REQUIREMENTS
220515 PLUMBING FIRESTOPPING
220516 EXPANSION FITTINGS AND LOOPS FOR PLUMBING PIPING
220553 PLUMBING IDENTIFICATION
220719 PLUMBING PIPING INSULATION
221005 PLUMBING PIPING
221006 PLUMBING PIPING SPECIALTIES
221319.13 SANITARY TRENCH DRAIN
223000 PLUMBING EQUIPMENT
224000 PLUMBING FIXTURES

Division 23 – HEATING, VENTILATING AND AIR CONDITIONING (HVAC)

230510 BASIC MECHANICAL REQUIREMENTS
230515 MECHANICAL FIRESTOPPING
230553 IDENTIFICATION FOR HVAC PIPING AND EQUIPMENT
230593 TESTING, ADJUSTING, AND BALANCING FOR HVAC
230713 DUCT INSULATION
230719 PIPING AND EQUIPMENT INSULATION
232113 HYDRONIC PIPING
232114 HYDRONIC SPECIALTIES
232123 HYDRONIC PUMPS
232300 REFRIGERANT PIPING
233100 HVAC DUCTS AND CASINGS
233300 AIR DUCT ACCESSORIES
233416 CENTRIFUGAL HVAC FANS
233700 AIR OUTLETS AND INLETS
235100 BREECHINGS, CHIMNEYS AND STACKS
235216 CONDENSING BOILERS
235400 FURNACES
235533 UNIT HEATERS
236313 AIR COOLED REFRIGERANT CONDENSERS
238124 ROOM AIR CONDITIONERS
238200 CONVECTION HEATING AND COOLING UNITS

DIVISION 26 – ELECTRICAL

260501	MINOR ELECTRICAL DEMOLITION
260510	BASIC ELECTRICAL REQUIREMENTS
260513	MEDIUM-VOLTAGE CABLES
260515	ELECTRICAL FIRESTOPPING
260519	LOW-VOLTAGE ELECTRICAL POWER CONDUCTORS AND CABLES
260526	GROUNDING AND BONDING FOR ELECTRICAL SYSTEMS
260529	HANGERS AND SUPPORTS FOR ELECTRICAL SYSTEMS
260534	CONDUIT
260537	BOXES
260543	UNDERGROUND ELECTRICAL WORK
260553	IDENTIFICATION FOR ELECTRICAL SYSTEMS
260573	POWER SYSTEM ANALYSIS
260910	HVAC MONITORING PANELS
260911	GAS DETECTION
260912	CONTROL PANELS AND INTEGRATION
260913	FIRE DETECTION AND ALARM
260914	HEAT TRACING CABLES
260915	FIBER OPTIC CABLING
260922	LIGHTING CONTROL DEVICES
262100	LOW-VOLTAGE ELECTRICAL SERVICE ENTRANCE
262200	LOW-VOLTAGE TRANSFORMERS
262413	SWITCHBOARDS
262416	PANELBOARDS
262419	MOTOR CONTROL CENTERS
262717	EQUIPMENT WIRING
262726	WIRING DEVICES
262727	EQUIPMENT FOR HAZARDOUS LOCATIONS
262813	FUSES
262818	ENCLOSED SWITCHES
262913	ENCLOSED CONTROLLERS
262923	VARIABLE-FREQUENCY MOTOR CONTROLLER
263213	ENGINE GENERATORS
263600	TRANSFER SWITCHES
264113	LIGHTNING PROTECTION
264300	SURGE PROTECTIVE DEVICES
265100	INTERIOR LIGHTING
265600	EXTERIOR LIGHTING

Site and Infrastructure Subgroup

DIVISION 31 - EARTHWORK

310000	EARTHWORK
311100	CLEARING AND GRUBBING
312213	ROUGH GRADING (NY)
312219	FINISH GRADING (NY)
312316	ROCK REMOVAL (ROCK EXCAVATION) (NY)
312319	DEWATERING
312323.13.01	BACKFILL (CRUSHED STONE FOUNDATION) (NY)
312323.13.02	BACKFILL (SELECTED BORROW BACKFILL)
312323.13.03	BACKFILL (SUBBASE MATERIAL) (NY)
312333	TRENCHING, BACKFILLING AND COMPACTION WORK (NY)
312334	STRUCTURAL EXCAVATION BACKFILL AND COMPACTION (NY)
312500	EROSION AND SEDIMENTATION CONTROL (NY)

DIVISION 32 - EXTERIOR IMPROVEMENTS

321000	ASPHALT CONCRETE ROADWAY CONSTRUCTION
323100	HEAVY DUTY CANTILEVER SLIDE GATE SYSTEM (CHAIN LINK)
323113	CHAIN LINK FENCES
323216	PRE-CAST MODULE BLOCK RETAINING WALL SYSTEM
329119.13	TOPSOIL PLACEMENT AND GRADING (TOPSOIL) (NY)
329219	SEEDING (NY)

DIVISION 33 – UTILITIES

330110.13	PRESSURE AND LEAKAGE TESTING OF PIPELINES
330505.41	LOW PRESSURE AIR TEST – SANITARY SEWER LINES
330531.11	POLYVINYL CHLORIDE (PVC) PIPE FOR NON-PRESSURE SEWER SERVICE
330598	TRACER WIRE
331050	POLYETHYLENE PRESSURE PIPE
331113.13	DUCTILE IRON (DI) WATER PIPE AND SPECIALS
331113.23	POLYVINYL CHLORIDE (PVC) PIPE FOR WATER SERVICE
331216.01	RESILIENT-DISC GATE VALVES
331216.02	BUTTERFLY VALVES, AIR SERVICE
331216.03	BUTTERFLY VALVES, WATER/SEWAGE SERVICE
331219	HYDRANT AND VALVE ASSEMBLY
331301	DISINFECTION TESTING OF PIPELINES
333113	POLYVINYL CHLORIDE (PVC) PIPE FOR PRESSURE SEWER SERVICE
333113.14	DUCTILE IRON (DI) PRESSURE SEWER PIPE
333213	PLANT WATER PUMP STATION
333217	HORIZONTAL DRY INSTALLED WASTEWATER PUMP FOR SEWAGE LIFT STATION
333913.01	PRECAST CONCRETE MANHOLES (SANITARY SEWAGE)

334100	HIGH DENSITY POLYETHYLENE DRAINAGE PIPE
334413.13	PRECAST CONCRETE CATCH BASINS
334913	PRECAST CONCRETE MANHOLES (STORM DRAINAGE)
335133.10	PLUG VALVES

DIVISION 40 – PROCESS INTERCONNECTIONS

400507	HANGERS & SUPPORTS
400508	PROCESS PIPING IDENTIFICATION
400523	STAINLESS STEEL PIPE AND FITTINGS
400551	COMMON REQUIREMENTS FOR PROCESS VALVES
400552	PROCESS VALVES
400557	ACTUATORS FOR PROCESS VALVES AND GATES
400559.23	STAINLESS STEEL GATES
400561.43	KNIFE GATE VALVES
400565	BALL CHECK VALVES
402301	STAINLESS STEEL AND CARBON STEEL PROCESS AIR PIPING
402323	PVC PROCESS PIPING
402400	CHEMICAL FEED PIPING
404213	PROCESS PIPING INSULATION
404213.1	PROCESS HOT AIR PIPING INSULATION
409123.23	PARSHALL FLUME

DIVISION 41 – MATERIAL PROCESSING AND HANDLING EQUIPMENT

414010	REMOTE FILL STATION

DIVISION 43 – PROCESS GAS AND LIQUID HANDLING, PURIFICATION AND STORAGE EQUIPMENT

431133	POSITIVE DISPLACEMENT ROTARY LOBE BLOWER PACKAGE
432313.27	PRIMARY SLUDGE PUMPS
432613	CHOPPER PUMP
432618.10	SUBMERSIBLE SEWAGE PUMPS
432618.20	SUBMERSIBLE SEWAGE PUMPS (RDT FILTRATE)
432618.21	RDT FILTRATE DUPLEX PUMP CONTROL SYSTEM
434183	LIQUID CHEMICAL STORAGE TANKS

DIVISION 46 – WATER AMD WASTEWATER EQUIPMENT

462100	FINE SCREENING EQUIPMENT
462113	MECHANICALLY CLEANED BAR SCREEN
462113.1	MECHANICAL BS WASHER COMPACTOR
462323	VORTEX GRIT REMOVAL SYSTEM EQUIPMENT
463366	LIQUID CHEMICAL TRANSFER PUMPS
464321	PRIMARY CLARIFIER CONSTRUCTION
465136.22	AERATION DIFFUSER SYSTEM
467133	ROTARY DRUM THICKENER

467321 ATAD SYSTEM SPECIFICATION
467621 BELT DEWATERING PRESS

END OF TABLE OF CONTENTS

ADVERTISEMENT FOR BIDS

Town of New Windsor
Orange County, New York

CAESARS LANE WASTEWATER TREATMENT PLANT EXPANSION PHASE 2 PROJECT

General Notice

Town of New Windsor (Owner) is requesting Bids for the construction of the following Project:

Caesars Lane Wastewater Treatment Plant Expansion Phase 2 Project

Bids for the construction of the Project will be received at the **Town of New Windsor Clerk's Office** located at **555 Union Avenue, New Windsor, NY 12553** until **July 10, 2025 10:00 AM** local time. At that time the Bids received will be **publicly** opened and read.

The Project includes the following Work:

General Construction of new WWTP infrastructure including buildings, tanks, equipment, and various process structures, improvements and modifications to existing plant infrastructure, and complete or partial demolition of portions of existing plant infrastructure.

Separate Bids will be received for the following Contracts:

Contract GC-1 – General Construction

Obtaining the Bidding Documents

The Issuing Office for the Bidding Documents is:

MHE Engineering, D.P.C.
111 Wheatfield Drive, Suite 1
Milford, PA 18337

Prospective Bidders may obtain or examine the Bidding Documents at the Issuing Office on Monday through Friday between the hours of **8:30 am and 5:00 pm** and may obtain copies of the Bidding Documents from the Issuing Office as described above and becoming available on **April 18, 2025. The information for Bidders, Drawings, Specifications and other Contract Documents may be examined at no expense on line by contacting MHE at (570) 296-2765 or email same at mhepa@mhepc.com**

Partial sets of Bidding Documents will not be available from the Issuing Office. Neither Owner nor Engineer will be responsible for full or partial sets of Bidding Documents, including addenda, if any, obtained from sources other than the Issuing Office. Only those persons whose name and address are on record of having obtained the Contract Documents will be permitted to bid and issued the Addendums, if any.

Copyright© 2018 National Society of Professional Engineers, American Council of Engineering Companies, and American Society of Civil Engineers. All rights reserved.

Digital copies of the contract documents may be obtained online as a download by a secured electronic link for a non-refundable fee of fifty dollars ($50.00) upon payment with a check made payable to MHE Engineering, D.P.C. by contacting the Issuing Office at (570) 296-2765 or by email at mhepa@mhepc.com

Hard copies of the contract documents may be obtained from MHE Engineering, D.P.C. by special request for an additional fee.

Each bid shall be accompanied by an acceptable form of Bid Guarantee in an amount equal to at least five (5) percent of the amount of the Bid payable to the **Town of New Windsor** as a guarantee that if the Bid is accepted, the Bidder will, within fifteen (15) days after the award of the Contract, execute the Contract and file acceptable Performance and Labor and Material Payment Bonds and Certificate(s) of Insurance.

Pre-Bid Conference

A pre-bid conference for the Project will be held on **Thursday May 22, 2025** at **10:00 AM** at the **project site, 145 Caesars Lane, New Windsor, NY 12553.** Attendance at the pre-bid conference is encouraged, but not required.

OWNERS RIGHTS RESERVED: **Town of New Windsor** hereinafter called the Owner, reserves the right to reject any or all Bids and to waive any informality or technicality in any Bid in the interest of the Owner.

PROJECT LABOR AGREEMENT: Bidders are advised that the Town of New Windsor has completed a Project Labor Agreement (PLA), which is a part of the Contract Documents. The Wicks Law Provisions of Multiple Prime Contracts is exempted due to the PLA, as such, the Project is being bid as a Single Prime Contract.

No bidder may withdraw his bid within forty-five (45) days after the actual date of the opening thereof.

STATEMENT OF NON-COLLUSION: Bidders on Contracts are required to execute a non-collusive bidding affidavit pursuant to Section 103(d) of the General Municipal Law of the State of New York.

IRAN DIVESTMENT ACT: By submission of this bid, each bidder and each person signing on behalf of any bidder certifies, and in the case of a joint bid, each party thereto certifies as to its own organization, under penalty of perjury, that to the best of its knowledge and belief, each bidder is not on the list created pursuant to paragraph (b) of Subdivision 3 of Section 165-a of the State Finance Law.

Subject to the provisions of Article 28, Part III of the New York State Tax Law and the provisions of the Contract Documents, the Owner is exempt from any payment of sales and compensating use taxes of the State of New York and cities and counties on all materials supplied to the Owner pursuant to this contract.

The location of the bid opening is accessible to persons with disabilities. If special accommodations are needed for persons with disabilities, those with hearing impairments, or those in need of translation from English, those individuals should contact Patricia A. Clarino, Town Clerk, at (845) 563-4611 or pclarino@newwindsor-ny.gov at least two weeks in advance of the bid opening date to allow for necessary arrangements.

Copyright© 2018 National Society of Professional Engineers, American Council of Engineering Companies, and American Society of Civil Engineers. All rights reserved.

The **Town of New Windsor,** an equal opportunity employer and affirmative action employer, hereby notifies all bidders that it will affirmatively ensure that in regard to any contract entered into pursuant to this advertisement, minority business enterprises will be afforded full opportunity to submit bids in response to this invitation and will not be discriminated against on the ground of race, gender, color or national origin in consideration of an award. The Bidders/offerors must submit documentary evidence of minority and women business enterprises who have been contracted and to whom commitments shall be submitted concurrently with the bid.

This Advertisement is issued by:

Owner: **Town of New Windsor**
By: **Patricia A. Clarino**
Title: **Town Clerk**
Date: **April 18, 2025**

Copyright© 2018 National Society of Professional Engineers, American Council of Engineering Companies, and American Society of Civil Engineers. All rights reserved.

INSTRUCTIONS TO BIDDERS FOR CONSTRUCTION CONTRACT

TABLE OF CONTENTS

Page

Article 1— Defined Terms 1

Article 2— Bidding Documents 1

Article 3— Qualifications of Bidders 2

Article 4— Pre-Bid Conference 2

Article 5— Site and Other Areas; Existing Site Conditions; Examination of Site; Owner's Safety Program; Other Work at the Site 3

Article 6— Bidder's Representations and Certifications 5

Article 7— Interpretations and Addenda 5

Article 8— Bid Security 6

Article 9— Contract Times 6

Article 10— Substitute and "Or Equal" Items 6

Article 11— Subcontractors, Suppliers, and Others 7

Article 12— Preparation of Bid 7

Article 13— Basis of Bid 8

Article 14— Submittal of Bid 8

Article 15— Modification and Withdrawal of Bid 9

Article 16— Opening of Bids 9

Article 17— Bids to Remain Subject to Acceptance 9

Article 18— Evaluation of Bids and Award of Contract 9

Article 19— Bonds and Insurance 11

Article 20— Signing of Agreement 11

Article 21— Sales and Use Taxes 11

Article 22— Additional Requirements 11

Copyright© 2018 National Society of Professional Engineers, American Council of Engineering Companies, and American Society of Civil Engineers. All rights reserved.

ARTICLE 1—DEFINED TERMS

1.01 Terms used in these Instructions to Bidders have the meanings indicated in the General Conditions and Supplementary Conditions. Additional terms used in these Instructions to Bidders have the meanings indicated below:

A. *Issuing Office*—The office from which the Bidding Documents are to be issued, and which registers plan holders.

ARTICLE 2—BIDDING DOCUMENTS

2.01 Bidder shall obtain a complete set of Bidding Requirements and proposed Contract Documents (together, the Bidding Documents). See the Agreement for a list of the Contract Documents. It is Bidder's responsibility to determine that it is using a complete set of documents in the preparation of a Bid. Bidder assumes sole responsibility for errors or misinterpretations resulting from the use of incomplete documents, by Bidder itself or by its prospective Subcontractors and Suppliers.

2.02 Bidding Documents are made available for the sole purpose of obtaining Bids for completion of the Project and permission to download or distribution of the Bidding Documents does not confer a license or grant permission or authorization for any other use. Authorization to download documents, or other distribution, includes the right for plan holders to print documents solely for their use, and the use of their prospective Subcontractors and Suppliers, provided the plan holder pays all costs associated with printing or reproduction. Printed documents may not be re-sold under any circumstances.

2.03 Bidder may register as a plan holder and obtain complete sets of Bidding Documents, in the number and format stated in the Advertisement or invitation to bid, from the Issuing Office. Bidders may rely that sets of Bidding Documents obtained from the Issuing Office are complete, unless an omission is blatant. Registered plan holders will receive Addenda issued by Owner.

2.04 Partial sets of Bidding Documents will not be available from the Issuing Office. Neither Owner nor Engineer will be responsible for full or partial sets of Bidding Documents, including addenda, if any, obtained from sources other than the Issuing Office. Only those persons whose name and address are on record of having obtained the Contract Documents will be permitted to bid and issued the Addendums, if any.

2.05 *Electronic Documents*

A. When the Bidding Requirements indicate that electronic (digital) copies of the Bidding Documents are available, such documents will be made available to the Bidders as Electronic Documents in the manner specified.

1. Bidding Documents will be provided in Adobe PDF (Portable Document Format) (.pdf) that is readable by Adobe Acrobat Reader Version **2017** or later. It is the intent of the Engineer and Owner that such Electronic Documents are to be exactly representative of the paper copies of the documents. However, because the Owner and Engineer cannot totally control the transmission and receipt of Electronic Documents nor the Contractor's means of reproduction of such documents, the Owner and Engineer cannot and do not guarantee that Electronic Documents and reproductions prepared from those versions are identical in every manner to the paper copies.

Copyright© 2018 National Society of Professional Engineers, American Council of Engineering Companies, and American Society of Civil Engineers. All rights reserved.

B. Unless otherwise stated in the Bidding Documents, the Bidder may use and rely upon complete sets of Electronic Documents of the Bidding Documents, described in Paragraph 2.05.A above. However, Bidder assumes all risks associated with differences arising from transmission/receipt of Electronic Documents versions of Bidding Documents and reproductions prepared from those versions and, further, assumes all risks, costs, and responsibility associated with use of the Electronic Documents versions to derive information that is not explicitly contained in printed paper versions of the documents, and for Bidder's reliance upon such derived information.

ARTICLE 3—QUALIFICATIONS OF BIDDERS

3.01 Bidder is to submit the following information with its Bid to demonstrate Bidder's qualifications to perform the Work:

A. Written evidence establishing its qualifications such as financial data, previous experience, and present commitments.

B. A written statement that Bidder is authorized to do business in the state where the Project is located, or a written certification that Bidder will obtain such authority prior to the Effective Date of the Contract.

C. Bidder's state or other contractor license number, if applicable.

D. Subcontractor and Supplier qualification information.

E. Other required information regarding qualifications.

3.02 A Bidder's failure to submit required qualification information within the times indicated may disqualify Bidder from receiving an award of the Contract.

3.03 No requirement in this Article 3 to submit information will prejudice the right of Owner to seek additional pertinent information regarding Bidder's qualifications.

ARTICLE 4—PRE-BID CONFERENCE

4.01 A pre-bid conference will be held for this Project on **May 22, 2025 at 10:00 AM at the project site, Caesars Lane WWTP, 145 Caesars Lane, New Windsor, NY 12553.**

4.02 A non-mandatory pre-bid conference will be held at the time and location indicated in the Advertisement or invitation to bid. Representatives of Owner and Engineer will be present to discuss the Project. Bidders are encouraged to attend and participate in the conference; however, attendance at this conference is not required to submit a Bid.

4.03 Information presented at the pre-Bid conference does not alter the Contract Documents. Owner will issue Addenda to make any changes to the Contract Documents that result from discussions

Copyright© 2018 National Society of Professional Engineers, American Council of Engineering Companies, and American Society of Civil Engineers. All rights reserved.

at the pre-Bid conference. Information presented, and statements made at the pre-bid conference will not be binding or legally effective unless incorporated in an Addendum.

ARTICLE 5—SITE AND OTHER AREAS; EXISTING SITE CONDITIONS; EXAMINATION OF SITE; OWNER'S SAFETY PROGRAM; OTHER WORK AT THE SITE

5.01 *Site and Other Areas*

A. The Site is identified in the Bidding Documents. By definition, the Site includes rights-of-way, easements, and other lands furnished by Owner for the use of the Contractor. Any additional lands required for temporary construction facilities, construction equipment, or storage of materials and equipment, and any access needed for such additional lands, are to be obtained and paid for by Contractor.

5.02 *Existing Site Conditions*

A. *Subsurface and Physical Conditions; Hazardous Environmental Conditions*

1. The Supplementary Conditions identify the following regarding existing conditions at or adjacent to the Site:

a. Those reports of explorations and tests of subsurface conditions at or adjacent to the Site that contain Technical Data.

b. Those drawings known to Owner of existing physical conditions at or adjacent to the Site, including those drawings depicting existing surface or subsurface structures at or adjacent to the Site (except Underground Facilities), that contain Technical Data.

c. Reports and drawings known to Owner relating to Hazardous Environmental Conditions that have been identified at or adjacent to the Site.

d. Technical Data contained in such reports and drawings.

2. Owner will make copies of reports and drawings referenced above available to any Bidder on request. These reports and drawings are not part of the Contract Documents, but the Technical Data contained therein upon whose accuracy Bidder is entitled to rely, as provided in the General Conditions, has been identified and established in the Supplementary Conditions. Bidder is responsible for any interpretation or conclusion Bidder draws from any Technical Data or any other data, interpretations, opinions, or information contained in such reports or shown or indicated in such drawings.

3. If the Supplementary Conditions do not identify Technical Data, the default definition of Technical Data set forth in Article 1 of the General Conditions will apply.

4. *Geotechnical Baseline Report/Geotechnical Data Report:* The Bidding Documents contain a Geotechnical Engineering Report (GER).

a. As set forth in the Supplementary Conditions, the GER describes certain select subsurface conditions that are anticipated to be encountered by Contractor during construction in specified locations ("Baseline Conditions"). The GER is a Contract Document.

b. The Baseline Conditions in the GER are intended to reduce uncertainty and the degree of contingency in submitted Bids. However, Bidders cannot rely solely on

Copyright© 2018 National Society of Professional Engineers, American Council of Engineering Companies, and American Society of Civil Engineers. All rights reserved.

the Baseline Conditions. Bids should be based on a comprehensive approach that includes an independent review and analysis of the GER, all other Contract Documents, Technical Data, other available information, and observable surface conditions. Not all potential subsurface conditions are baselined.

c. Nothing in the GER is intended to relieve Bidders of the responsibility to make their own determinations regarding construction costs, bidding strategies, and Bid prices, nor of the responsibility to select and be responsible for the means, methods, techniques, sequences, and procedures of construction, and for safety precautions and programs incident thereto.

d. As set forth in the Supplementary Conditions, the GER is a Contract Document containing data prepared by or for the Owner in support of the GER.

B. *Underground Facilities:* Underground Facilities are shown or indicated on the Drawings, pursuant to Paragraph 5.05 of the General Conditions, and not in the drawings referred to in Paragraph 5.02.A of these Instructions to Bidders. Information and data regarding the presence or location of Underground Facilities are not intended to be categorized, identified, or defined as Technical Data.

5.03 *Other Site-related Documents*

A. In addition to the documents regarding existing Site conditions referred to in Paragraph 5.02.A, the following other documents relating to conditions at or adjacent to the Site are known to Owner and made available to Bidders for reference:

1. **No additional site related documents.**

Owner will make copies of these other Site-related documents available to any Bidder on request.

B. Owner has not verified the contents of these other Site-related documents, and Bidder may not rely on the accuracy of any data or information in such documents. Bidder is responsible for any interpretation or conclusion Bidder draws from the other Site-related documents.

C. The other Site-related documents are not part of the Contract Documents.

D. Bidders are encouraged to review the other Site-related documents, but Bidders will not be held accountable for any data or information in such documents. The requirement to review and take responsibility for documentary Site information is limited to information in (1) the Contract Documents and (2) the Technical Data.

E. No other Site-related documents are available.

5.04 *Site Visit and Testing by Bidders*

A. Bidder is required to visit the Site and conduct a thorough visual examination of the Site and adjacent areas. During the visit the Bidder must not disturb any ongoing operations at the Site.

B. A Site visit is scheduled following the pre-bid conference.

C. Bidders visiting the Site are required to arrange their own transportation to the Site.

Copyright© 2018 National Society of Professional Engineers, American Council of Engineering Companies, and American Society of Civil Engineers. All rights reserved.

D. All access to the Site other than during a regularly scheduled Site visit must be coordinated through the Owner or Engineer. Bidder must conduct any Site visit during normal working hours.

E. Bidder is not required to conduct any subsurface testing, or exhaustive investigations of Site conditions.

5.05 *Owner's Safety Program*

A. Site visits and work at the Site may be governed by an Owner safety program. If an Owner safety program exists, it will be noted in the Supplementary Conditions.

5.06 *Other Work at the Site*

A. Reference is made to Article 8 of the General Conditions for the identification of the general nature of other work of which Owner is aware (if any) that is to be performed at the Site by Owner or others (such as utilities and other prime contractors) and relates to the Work contemplated by these Bidding Documents. If Owner is party to a written contract for such other work, then on request, Owner will provide to each Bidder access to examine such contracts (other than portions thereof related to price and other confidential matters), if any.

ARTICLE 6—BIDDER'S REPRESENTATIONS AND CERTIFICATIONS

6.01 *Express Representations and Certifications in Bid Form, Agreement*

A. The Bid Form that each Bidder will submit contains express representations regarding the Bidder's examination of Project documentation, Site visit, and preparation of the Bid, and certifications regarding lack of collusion or fraud in connection with the Bid. Bidder should review these representations and certifications, and assure that Bidder can make the representations and certifications in good faith, before executing and submitting its Bid.

B. If Bidder is awarded the Contract, Bidder (as Contractor) will make similar express representations and certifications when it executes the Agreement.

ARTICLE 7—INTERPRETATIONS AND ADDENDA

7.01 Owner on its own initiative may issue Addenda to clarify, correct, supplement, or change the Bidding Documents.

7.02 Bidder shall submit all questions about the meaning or intent of the Bidding Documents to Engineer in writing. Contact information and submittal procedures for such questions are as follows:

A. **Email: mhepa@mhepc.com**

7.03 Interpretations or clarifications considered necessary by Engineer in response to such questions will be issued by Addenda delivered to all registered plan holders. Questions received less than seven (7) working days prior to the date for opening of Bids will not be answered. Addenda will be issued no later than five (5) working days prior to the date for opening bids.

7.04 Only responses set forth in an Addendum will be binding. Oral and other interpretations or clarifications will be without legal effect. Responses to questions are not part of the Contract

Copyright© 2018 National Society of Professional Engineers, American Council of Engineering Companies, and American Society of Civil Engineers. All rights reserved.

Documents unless set forth in an Addendum that expressly modifies or supplements the Contract Documents.

ARTICLE 8—BID SECURITY

8.01 A Bid must be accompanied by Bid security made payable to Owner in an amount of **five** percent of Bidder's maximum Bid price (determined by adding the base bid and all alternates) and in the form of a Bid bond issued by a surety meeting the requirements of Paragraph 6.01 of the General Conditions. Such Bid bond will be issued in the form included in the Bidding Documents. **Bid security must be at least 5% of the Bidder's maximum Bid price.**

8.02 The Bid security of the apparent Successful Bidder will be retained until Owner awards the contract to such Bidder, and such Bidder has executed the Contract, furnished the required Contract security, and met the other conditions of the Notice of Award, whereupon the Bid security will be released. If the Successful Bidder fails to execute and deliver the Contract and furnish the required Contract security within 15 days after the Notice of Award, Owner may consider Bidder to be in default, annul the Notice of Award, and the Bid security of that Bidder will be forfeited, in whole in the case of a penal sum bid bond, and to the extent of Owner's damages in the case of a damages-form bond. Such forfeiture will be Owner's exclusive remedy if Bidder defaults.

8.03 The Bid security of other Bidders that Owner believes to have a reasonable chance of receiving the award may be retained by Owner until the earlier of 7 days after the Effective Date of the Contract or 61 days after the Bid opening, whereupon Bid security furnished by such Bidders will be released.

8.04 Bid security of other Bidders that Owner believes do not have a reasonable chance of receiving the award will be released within 7 days after the Bid opening.

ARTICLE 9—CONTRACT TIMES

9.01 The number of days within which, or the dates by which, the Work is to be (a) substantially completed and (b) ready for final payment, and (c) Milestones (if any) are to be achieved, are set forth in the Agreement.

9.02 Provisions for liquidated damages, if any, for failure to timely attain a Milestone, Substantial Completion, or completion of the Work in readiness for final payment, are set forth in the Agreement.

ARTICLE 10—SUBSTITUTE AND "OR EQUAL" ITEMS

10.01 The Contract for the Work, as awarded, will be on the basis of materials and equipment specified or described in the Bidding Documents without consideration during the bidding and Contract award process of possible substitute or "or-equal" items. In cases in which the Contract allows the Contractor to request that Engineer authorize the use of a substitute or "or-equal" item of material or equipment, application for such acceptance may not be made to and will not be considered by Engineer until after the Effective Date of the Contract.

10.02 All prices that Bidder sets forth in its Bid will be based on the presumption that the Contractor will furnish the materials and equipment specified or described in the Bidding Documents, as

Copyright© 2018 National Society of Professional Engineers, American Council of Engineering Companies, and American Society of Civil Engineers. All rights reserved.

supplemented by Addenda. Any assumptions regarding the possibility of post-Bid approvals of "or-equal" or substitution requests are made at Bidder's sole risk.

ARTICLE 11—SUBCONTRACTORS, SUPPLIERS, AND OTHERS

11.01 The Contractor shall not award work to Subcontractor(s) in excess of the 50% of the contract value.

ARTICLE 12—PREPARATION OF BID

12.01 The Bid Form is included with the Bidding Documents.

A. All blanks on the Bid Form must be completed in ink and the Bid Form signed in ink. Erasures or alterations must be initialed in ink by the person signing the Bid Form. A Bid price must be indicated for each section, Bid item, alternate, adjustment unit price item, and unit price item listed therein.

B. If the Bid Form expressly indicates that submitting pricing on a specific alternate item is optional, and Bidder elects to not furnish pricing for such optional alternate item, then Bidder may enter the words "No Bid" or "Not Applicable."

12.02 If Bidder has obtained the Bidding Documents as Electronic Documents, then Bidder shall prepare its Bid on a paper copy of the Bid Form printed from the Electronic Documents version of the Bidding Documents. The printed copy of the Bid Form must be clearly legible, printed on 8½ inch by 11-inch paper and as closely identical in appearance to the Electronic Document version of the Bid Form as may be practical. The Owner reserves the right to accept Bid Forms which nominally vary in appearance from the original paper version of the Bid Form, providing that all required information and submittals are included with the Bid.

12.03 A Bid by a corporation must be executed in the corporate name by a corporate officer (whose title must appear under the signature), accompanied by evidence of authority to sign. The corporate address and state of incorporation must be shown.

12.04 A Bid by a partnership must be executed in the partnership name and signed by a partner (whose title must appear under the signature), accompanied by evidence of authority to sign. The official address of the partnership must be shown.

12.05 A Bid by a limited liability company must be executed in the name of the firm by a member or other authorized person and accompanied by evidence of authority to sign. The state of formation of the firm and the official address of the firm must be shown.

12.06 A Bid by an individual must show the Bidder's name and official address.

12.07 A Bid by a joint venture must be executed by an authorized representative of each joint venturer in the manner indicated on the Bid Form. The joint venture must have been formally established prior to submittal of a Bid, and the official address of the joint venture must be shown.

12.08 All names must be printed in ink below the signatures.

12.09 The Bid must contain an acknowledgment of receipt of all Addenda, the numbers of which must be filled in on the Bid Form.

12.10 Postal and e-mail addresses and telephone number for communications regarding the Bid must be shown.

Copyright© 2018 National Society of Professional Engineers, American Council of Engineering Companies, and American Society of Civil Engineers. All rights reserved.

12.11 The Bid must contain evidence of Bidder's authority to do business in the state where the Project is located, or Bidder must certify in writing that it will obtain such authority within the time for acceptance of Bids and attach such certification to the Bid.

12.12 If Bidder is required to be licensed to submit a Bid or perform the Work in the state where the Project is located, the Bid must contain evidence of Bidder's licensure, or Bidder must certify in writing that it will obtain such licensure within the time for acceptance of Bids and attach such certification to the Bid. Bidder's state contractor license number, if any, must also be shown on the Bid Form.

ARTICLE 13—BASIS OF BID

13.01 *Lump Sum*

A. Bidders must submit a Bid on a lump sum basis as set forth in the Bid Form.

13.02 *Base Bid with Alternates*

A. Bidders must submit a Bid on a lump sum basis for the base Bid and include a separate price for each alternate described in the Bidding Documents and as provided for in the Bid Form. The price for each alternate will be the amount added to or deleted from the base Bid if Owner selects the alternate.

B. In the comparison of Bids, alternates will be applied in the same order of priority as listed in the Bid Form.

13.03 *Unit Price*

A. Bidders must submit a Bid on a unit price basis for each item of Work listed in the unit price section of the Bid Form.

B. The "Bid Price" (sometimes referred to as the extended price) for each unit price Bid item will be the product of the "Estimated Quantity", which Owner or its representative has set forth in the Bid Form, for the item and the corresponding "Bid Unit Price" offered by the Bidder. The total of all unit price Bid items will be the sum of these "Bid Prices"; such total will be used by Owner for Bid comparison purposes. The final quantities and Contract Price will be determined in accordance with Paragraph 13.03 of the General Conditions.

C. Discrepancies between the multiplication of units of Work and unit prices will be resolved in favor of the unit prices. Discrepancies between the indicated sum of any column of figures and the correct sum thereof will be resolved in favor of the correct sum.

13.04 *Allowances*

A. For allowances the Bid price must include such amounts as the Bidder deems proper for Contractor's overhead, costs, profit, and other expenses on account of cash allowances, if any, named in the Contract Documents, in accordance with Paragraph 13.02.B of the General Conditions.

ARTICLE 14—SUBMITTAL OF BID

14.01 The Bidding Documents include one separate unbound copy of the Bid Form, and, if required, the Bid Bond Form. The unbound copy of the Bid Form is to be completed and submitted with the Bid

Copyright© 2018 National Society of Professional Engineers, American Council of Engineering Companies, and American Society of Civil Engineers. All rights reserved.

security and the other documents required to be submitted under the terms of Article 2 of the Bid Form.

14.02 A Bid must be received no later than the date and time prescribed and at the place indicated in the Advertisement or invitation to bid and must be enclosed in a plainly marked package with the Project title, and, if applicable, the designated portion of the Project for which the Bid is submitted, the name and address of Bidder, and must be accompanied by the Bid security and other required documents. If a Bid is sent by mail or other delivery system, the sealed envelope containing the Bid must be enclosed in a separate package plainly marked on the outside with the notation "BID ENCLOSED." A mailed Bid must be addressed to the location designated in the Advertisement.

14.03 Bids received after the date and time prescribed for the opening of bids, or not submitted at the correct location or in the designated manner, will not be accepted and will be returned to the Bidder unopened.

ARTICLE 15—MODIFICATION AND WITHDRAWAL OF BID

15.01 An unopened Bid may be withdrawn by an appropriate document duly executed in the same manner that a Bid must be executed and delivered to the place where Bids are to be submitted prior to the date and time for the opening of Bids. Upon receipt of such notice, the unopened Bid will be returned to the Bidder.

15.02 If a Bidder wishes to modify its Bid prior to Bid opening, Bidder must withdraw its initial Bid in the manner specified in Paragraph 15.01 and submit a new Bid prior to the date and time for the opening of Bids.

ARTICLE 16—OPENING OF BIDS

16.01 Bids will be opened at the time and place indicated in the advertisement or invitation to bid and, unless obviously non-responsive, read aloud publicly. An abstract of the amounts of the base Bids and major alternates, if any, will be made available to Bidders after the opening of Bids.

ARTICLE 17—BIDS TO REMAIN SUBJECT TO ACCEPTANCE

17.01 All Bids will remain subject to acceptance for the period of time stated in the Bid Form, but Owner may, in its sole discretion, release any Bid and return the Bid security prior to the end of this period.

ARTICLE 18—EVALUATION OF BIDS AND AWARD OF CONTRACT

18.01 Owner reserves the right to reject any or all Bids, including without limitation, nonconforming, nonresponsive, unbalanced, or conditional Bids. Owner also reserves the right to waive all minor Bid informalities not involving price, time, or changes in the Work.

18.02 Owner will reject the Bid of any Bidder that Owner finds, after reasonable inquiry and evaluation, to not be responsible.

18.03 If Bidder purports to add terms or conditions to its Bid, takes exception to any provision of the Bidding Documents, or attempts to alter the contents of the Contract Documents for purposes of

Copyright© 2018 National Society of Professional Engineers, American Council of Engineering Companies, and American Society of Civil Engineers. All rights reserved.

the Bid, whether in the Bid itself or in a separate communication to Owner or Engineer, then Owner will reject the Bid as nonresponsive.

18.04 If Owner awards the contract for the Work, such award will be to the responsible Bidder submitting the lowest responsive Bid.

18.05 *Evaluation of Bids*

A. In evaluating Bids, Owner will consider whether the Bids comply with the prescribed requirements, and such alternates, unit prices, and other data, as may be requested in the Bid Form or prior to the Notice of Award.

B. In the comparison of Bids, alternates will be applied in the same order of priority as listed in the Bid Form. To determine the Bid prices for purposes of comparison, Owner will announce to all bidders a "Base Bid plus alternates" budget after receiving all Bids, but prior to opening them. For comparison purposes alternates will be accepted, following the order of priority established in the Bid Form, until doing so would cause the budget to be exceeded. After determination of the Successful Bidder based on this comparative process and on the responsiveness, responsibility, and other factors set forth in these Instructions, the award may be made to said Successful Bidder on its base Bid and any combination of its additive alternate Bids for which Owner determines funds will be available at the time of award.

C. For determination of the apparent low Bidder(s) when sectional bids are submitted, Bids will be compared on the basis of the aggregate of the Bids for separate sections and the Bids for combined sections that result in the lowest total amount for all of the Work.

D. For the determination of the apparent low Bidder when unit price bids are submitted, Bids will be compared on the basis of the total of the products of the estimated quantity of each item and unit price Bid for that item, together with any lump sum items.

18.06 In evaluating whether a Bidder is responsible, Owner will consider the qualifications of the Bidder and may consider the qualifications and experience of Subcontractors and Suppliers proposed for those portions of the Work for which the identity of Subcontractors and Suppliers must be submitted as provided in the Bidding Documents.

18.07 Owner may conduct such investigations as Owner deems necessary to establish the responsibility, qualifications, and financial ability of Bidders and any proposed Subcontractors or Suppliers.

The Contract will be awarded to that responsible Bidder or Bidders whose Bid, so determined within the Base Bid or Alternate Bids, totals the lowest number of dollars, if said Bidder or Bidders are otherwise satisfactory to the Owner. The Owner reserves the right to waive any informalities in or reject any or all Bids.

In the event that there is a discrepancy between the unit prices and the extended totals, unit prices shall govern. In the event that there is a discrepancy between the unit prices or the extended totals written in words and written in figures, the unit prices or extended totals written in words shall govern. No Bid will be accepted which does not contain a unit price for every item in the proposal form.

Copyright© 2018 National Society of Professional Engineers, American Council of Engineering Companies, and American Society of Civil Engineers. All rights reserved.

ARTICLE 19—BONDS AND INSURANCE

19.01 Article 6 of the General Conditions, as may be modified by the Supplementary Conditions, sets forth Owner's requirements as to performance and payment bonds, other required bonds (if any), and insurance. When the Successful Bidder delivers the executed Agreement to Owner, it must be accompanied by required bonds and insurance documentation.

19.02 Article 8, Bid Security, of these Instructions, addresses any requirements for providing bid bonds as part of the bidding process.

ARTICLE 20—SIGNING OF AGREEMENT

20.01 When Owner issues a Notice of Award to the Successful Bidder, it will be accompanied by the unexecuted counterparts of the Agreement along with the other Contract Documents as identified in the Agreement. Within 15 days thereafter, Successful Bidder must execute and deliver the required number of counterparts of the Agreement and any bonds and insurance documentation required to be delivered by the Contract Documents to Owner. Within 10 days thereafter, Owner will deliver one fully executed counterpart of the Agreement to Successful Bidder, together with printed and electronic copies of the Contract Documents as stated in Paragraph 2.02 of the General Conditions.

ARTICLE 21—SALES AND USE TAXES

21.01 Owner is exempt from **New York** state sales and use taxes on materials and equipment to be incorporated in the Work. Said taxes must not be included in the Bid.

ARTICLE 22—ADDITIONAL REQUIREMENTS

22.01 **Agreement to be Assigned**. Bidder acknowledges the provisions of the Agreement as to the assignment of the specified contract for procurement of goods and special services for Suez WTS USA, Inc.

The contract between Owner as "Buyer" and Suez WTS USA, Inc. as "Seller" for procurement of goods and special services ("Procurement Contract") for MBR equipment will be assigned to Contractor by Owner, and Contractor will accept such assignment. A form documenting the assignment is attached as an exhibit to this Agreement.

This assignment will occur on **[the Effective Date of the Agreement]** and will relieve the Owner as Buyer from all further obligations and liabilities under the Procurement Contract. Contractor, as Buyer (Contractor/Assignee) following assignment, will assume full responsibility to Owner for the performance of obligations by Seller, which will be Contractor's Subcontractor or Supplier. Notwithstanding this assignment, all performance guarantees and warranties required by the Procurement Contract will continue to run for the benefit of the Owner and, in addition, for the benefit of the Contractor. Except as noted in the Procurement Contract, all rights, duties, and obligations of Engineer to Buyer and Seller under the Procurement Contract will cease upon assignment.

A copy of the assigned Procurement Contract is attached as Exhibit I.

Copyright© 2018 National Society of Professional Engineers, American Council of Engineering Companies, and American Society of Civil Engineers. All rights reserved.

BID FORM FOR CONSTRUCTION CONTRACT

The terms used in this Bid with initial capital letters have the meanings stated in the Instructions to Bidders.

ARTICLE 1—OWNER AND BIDDER

1.01 This Bid is submitted to: Town of New Windsor**, 555 Union Avenue, New Windsor, NY 12553**

1.02 The undersigned Bidder proposes and agrees, if this Bid is accepted, to enter into an Agreement with Owner in the form included in the Bidding Documents to perform all Work as specified or indicated in the Bidding Documents for the prices and within the times indicated in this Bid and in accordance with the other terms and conditions of the Bidding Documents.

ARTICLE 2—ATTACHMENTS TO THIS BID

2.01 The following documents are submitted with and made a condition of this Bid:

A. Required Bid security;

B. Required Bidder Qualification Statement with supporting data (Instructions to Bidders – Article 2);

C. Affidavit of Compliance with New York State Anti-Sexual Harassment Laws;

D. Wicks Law Form;

E. EEO Policy Statement – EFC Terms and Conditions Packet

ARTICLE 3—BASIS OF BID—LUMP SUM BID AND UNIT PRICES

3.01 Refer to Article 7 for Description of Bid Items.

3.02 *Lump Sum Bids:*

A. Bidder will complete the Work in accordance with the Contract Documents for the following lump sum (stipulated) price(s), together with any Unit Prices indicated in Paragraph 3.02:

1. Lump Sum Price (Single Lump Sum)

Item No.	Description	Bid Amount
LS-1	Site Work (100 Series)	$
LS-2	Headworks (200 Series)	$
LS-3	Primary Settling Tanks (300 Series)	$
LS-4	Solids Handling (400 Series)	$
LS-5a	MBR (500 Series) – General Construction (Excludes LS-5b)	$

Copyright© 2018 National Society of Professional Engineers, American Council of Engineering Companies, and American Society of Civil Engineers. All rights reserved.

LS-5b	Assigned Procurement Contract – Veolia Water Technologies & Solutions (F.K.A. Suez WTS USA, Inc.) (See Exhibit I)	**$3,826,000.00**
LS-6	Post-Aeration and Backpulse (600 Series)	$
LS-7	Dewatering Building (700 Series)	$
LS-8	Existing Plant Infrastructure Demolition Work (800 Series)	$
LS-9	New Workshop Garage Building (900 Series)	$
LS-10	Hazardous Material Abatement: (Excludes Demolition of Transite Pipe)	$
LS-11	Mobilization and General Conditions	$
Total of All Lump Sum Price Bid Items		$

3.03 *Contingency Items*

A. Contingency Items – These items will only be paid to the Contractor if approved by the Engineer and Owner. However, they will be used in the comparison of bids.

Item No.	Description	Unit	Estimated Quantity	Bid Unit Price	Bid Amount
C-1	Rock Excavation	CY	200		$
C-2	Roadway Subbase Material	CY	200		$
C-3	Select Backfill	CY	200		$
C-4	Crushed Stone	CY	500		$
C-5	Additional CIP Concrete	CY	50		$
C-6	Controlled Density Fill	CY	50		$
C-7	Bituminous Concrete Pavement	SY	100		$
C-8	Stabilization Woven Geotextile Fabric	SY	100		$
C-9	Liquid Sludge Disposal	GALLON	100,000		$
C-10	Concrete Repair Type 1	SF	5000		$
C-11	Concrete Repair Type 2	SF	1500		$

Copyright© 2018 National Society of Professional Engineers, American Council of Engineering Companies, and American Society of Civil Engineers. All rights reserved.

C-12	Concrete Repair Type 3	SF	500		$
C-13	Demolition of Transite Pipe	LF	500		$
C-14	Bollard	EA	5		$
Total of All Unit Price Contingency Items					$

B. Allowance - All specified cash allowance(s) are included in the price(s) set forth below, and have been computed in accordance with Paragraph 13.02 of the General Conditions.

Lump Sum for Allowance A-1: General Construction Allowance	**$350,000.00**
Lump Sum for Allowance A-2: Aqualogics Systems, Inc	**$650,000.00**
Lump Sum Allowance A-3: Veolia Contract Escalation and Additional Scope Change Order	**$500,000.00**
Lump Sum Allowance A-4: D-BEN Security Systems, Inc.	**$100,000.00**
Total for all Lump Sum for Allowance:	**$1,600,000.00**

C. Bidder acknowledges that:

1. each Bid Unit Price (Unit Price Bids and Contingency) includes an amount considered by Bidder to be adequate to cover Contractor's overhead and profit for each separately identified item, and
2. estimated quantities are not guaranteed, and are solely for the purpose of comparison of Bids, and final payment for all Unit Price Work will be based on actual quantities, determined as provided in the Contract Documents.

3.04 *Alternate Bid (Unused)*

3.05 *Total Base Bid Price (Lump Sum, Unit Price, Contingency and Allowance)*

Total Base Bid Price (Total of all Lump Sum, Unit Price, Contingency and Allowance)	$

ARTICLE 4—TIME OF COMPLETION

4.01 Bidder agrees that the Work will be substantially complete and will be completed and ready for final payment in accordance with Article 4 of the Agreement Between Owner and Contractor on or before the dates or within the number of calendar days indicated in the Agreement.

4.02 Bidder accepts the provisions of the Agreement as to liquidated damages.

Copyright© 2018 National Society of Professional Engineers, American Council of Engineering Companies, and American Society of Civil Engineers. All rights reserved.

ARTICLE 5—BIDDER'S ACKNOWLEDGEMENTS: ACCEPTANCE PERIOD, INSTRUCTIONS, ASSIGNMENT AND RECEIPT OF ADDENDA

5.01 *Bid Acceptance Period*

A. This Bid will remain subject to acceptance for 45 days after the Bid opening, or for such longer period of time that Bidder may agree to in writing upon request of Owner.

5.02 *Instructions to Bidders*

A. Bidder accepts all of the terms and conditions of the Instructions to Bidders, including without limitation those dealing with the disposition of Bid security.

5.03 *Receipt of Addenda*

A. Bidder hereby acknowledges receipt of the following Addenda: **[Add rows as needed. Bidder is to complete table.]**

Addendum Number	Addendum Date

5.04 *Procurement Contract Assignment*

A. Bidder acknowledges the provisions of the Agreement as to the assignment of the specified contract for procurement of goods and special services for Veolia Water Technologies & Solutions (F.K.A. Suez WTS USA, Inc.).

B. The contract between Owner as "Buyer" and Veolia Water Technologies & Solutions (F.K.A. Suez WTS USA, Inc.) as "Seller" for procurement of goods and special services ("Procurement Contract") for MBR equipment will be assigned to Contractor by Owner, and Contractor accepts such assignment. A form documenting the assignment is attached as an exhibit to this Agreement.

C. This assignment will occur on **[the Effective Date of the Agreement**] and will relieve the Owner as Buyer from all further obligations and liabilities under the Procurement Contract. Contractor, as Buyer (Contractor/Assignee) following assignment, will assume full responsibility to Owner for the performance of obligations by Seller, which will be Contractor's Subcontractor or Supplier. Notwithstanding this assignment, all performance guarantees and warranties required by the Procurement Contract will continue to run for the benefit of the Owner and, in addition, for the benefit of the Contractor. Except as noted in the Procurement Contract, all rights, duties, and obligations of Engineer to Buyer and Seller under the Procurement Contract will cease upon assignment.

D. A copy of the assigned Procurement Contract is attached as Exhibit I.

ARTICLE 6—BIDDER'S REPRESENTATIONS AND CERTIFICATIONS

6.01 *Bidder's Representations*

A. In submitting this Bid, Bidder represents the following:

1. Bidder has examined and carefully studied the Bidding Documents, including Addenda.

Copyright© 2018 National Society of Professional Engineers, American Council of Engineering Companies, and American Society of Civil Engineers. All rights reserved.

2. Bidder has visited the Site, conducted a thorough visual examination of the Site and adjacent areas, and become familiar with the general, local, and Site conditions that may affect cost, progress, and performance of the Work.

3. Bidder is familiar with all Laws and Regulations that may affect cost, progress, and performance of the Work.

4. Bidder has carefully studied the reports of explorations and tests of subsurface conditions at or adjacent to the Site and the drawings of physical conditions relating to existing surface or subsurface structures at the Site that have been identified in the Supplementary Conditions, with respect to the Technical Data in such reports and drawings.

5. Bidder has carefully studied the reports and drawings relating to Hazardous Environmental Conditions, if any, at or adjacent to the Site that have been identified in the Supplementary Conditions, with respect to Technical Data in such reports and drawings.

6. Bidder has considered the information known to Bidder itself; information commonly known to contractors doing business in the locality of the Site; information and observations obtained from visits to the Site; the Bidding Documents; and the Technical Data identified in the Supplementary Conditions or by definition, with respect to the effect of such information, observations, and Technical Data on (a) the cost, progress, and performance of the Work; (b) the means, methods, techniques, sequences, and procedures of construction to be employed by Bidder, if selected as Contractor; and (c) Bidder's (Contractor's) safety precautions and programs.

7. Based on the information and observations referred to in the preceding paragraph, Bidder agrees that no further examinations, investigations, explorations, tests, studies, or data are necessary for the performance of the Work at the Contract Price, within the Contract Times, and in accordance with the other terms and conditions of the Contract.

8. Bidder is aware of the general nature of work to be performed by Owner and others at the Site that relates to the Work as indicated in the Bidding Documents.

9. Bidder has given Engineer written notice of all conflicts, errors, ambiguities, or discrepancies that Bidder has discovered in the Bidding Documents, and of discrepancies between Site conditions and the Contract Documents, and the written resolution thereof by Engineer is acceptable to Contractor.

10. The Bidding Documents are generally sufficient to indicate and convey understanding of all terms and conditions for performance and furnishing of the Work.

11. The submission of this Bid constitutes an incontrovertible representation by Bidder that without exception the Bid and all prices in the Bid are premised upon performing and furnishing the Work required by the Bidding Documents.

6.02 *Bidder's Certifications*

A. The Bidder certifies the following:

1. This Bid is genuine and not made in the interest of or on behalf of any undisclosed individual or entity and is not submitted in conformity with any collusive agreement or rules of any group, association, organization, or corporation.

Copyright© 2018 National Society of Professional Engineers, American Council of Engineering Companies, and American Society of Civil Engineers. All rights reserved.

2. Bidder has not directly or indirectly induced or solicited any other Bidder to submit a false or sham Bid.
3. Bidder has not solicited or induced any individual or entity to refrain from bidding.
4. Bidder has not engaged in corrupt, fraudulent, collusive, or coercive practices in competing for the Contract. For the purposes of this Paragraph 8.02.A:
    a. Corrupt practice means the offering, giving, receiving, or soliciting of anything of value likely to influence the action of a public official in the bidding process.
    b. Fraudulent practice means an intentional misrepresentation of facts made (a) to influence the bidding process to the detriment of Owner, (b) to establish bid prices at artificial non-competitive levels, or (c) to deprive Owner of the benefits of free and open competition.
    c. Collusive practice means a scheme or arrangement between two or more Bidders, with or without the knowledge of Owner, a purpose of which is to establish bid prices at artificial, non-competitive levels.
    d. Coercive practice means harming or threatening to harm, directly or indirectly, persons or their property to influence their participation in the bidding process or affect the execution of the Contract.

ARTICLE 7—DESCRIPTION OF BID ITEMS

7.01 *LS-1 – Site Work*

A. Generally, the work as shown in the 100-series project drawings, including but not limited to: clearing and grubbing, rough grading, final grading, restoration and seeding, paving and driveway install, asphalt sidewalk, perimeter fencing, guiderail, entrance gates, E&S measures, compliance with project SWPPP, stormwater piping and infrastructure, drainage improvement work, site retaining walls, relocated plant influent sewer piping and manholes, includes all site process piping (install or demo) not within 5’ of associated structures, plant water site piping, potable water site piping, all necessary piping valves, fittings, couplings, etc. for a complete system, primary electrical service, site electrical, stand-by generators, all site piping installation or demolition not included in other bid items, installation of new plant outfall, abandonment work for existing outfall system, any necessary temporary facilities, maintenance of all plant operations, shoring, and work measures for project site work sequencing, etc. New outfall construction and existing outfall abandonment work shall be completed in accordance with NYSDEC permit requirements, included as Exhibit N and Exhibit M in the contract, respectively.

7.02 *LS-2 – Headworks*

A. Generally, the work as shown in the 200-series project drawings including, but not limited to: new influent collection box and Parshall flume structure, influent distribution boxes, new headworks building addition including all associated equipment, renovations to the existing headworks building, new grit chamber, modifications to the existing grit chamber, new primary distribution box, demolition of existing grit classifier building and existing Parshall flume and collection boxes, and any necessary temporary work measures for Headworks construction sequencing, etc. Includes all mechanical, electrical, and plumbing for completed work. Includes process piping within 5’ of building and structures.

Copyright© 2018 National Society of Professional Engineers, American Council of Engineering Companies, and American Society of Civil Engineers. All rights reserved.

7.03 *LS-3- Primary Settling Tanks*

A. Generally, the work as shown in the 300-series project drawings, including but not limited to: furnish and install new primary settling tank mechanisms and control panels, modifications and repairs to existing primary settling tanks and scum pits, construction of a new primary settling tank (Primary Tank #4) and sludge valve vault, modifications to the existing sludge valve pit, existing sludge wet well, and existing sludge pump pit, and any necessary temporary work measures for Primary construction sequencing, etc. Includes all mechanical and electrical for completed work. Includes process piping within 5' of structures.

7.04 *LS-4- Solids Handling*

A. Generally, the work as shown in the 400-series project drawings, including but not limited to: construction of new ATAD system (new sludge holding tank, ThermAer Reactor, SDNR Reactor, biofilter tank, scrubber unit), ATAD equipment building and equipment, sludge thickening equipment, chemical feed equipment, filtrate pump station and cooling water pump system, and any necessary temporary work measures for Solids Handling construction sequencing, etc. Includes all mechanical, electrical, and plumbing for completed work. Includes process piping within 5' of building and structures.

7.05 *LS-5a- MBR - General Construction (excludes LS-5b)*

A. Generally, the work as shown in the 500-series project drawings, including but not limited to: microscreen building, influent wet well, influent dry well and pumps, bio tank splitter box, anoxic tanks, aeration tanks, MBR distribution channel, MBR Basin, MBR Basin Building Enclosure (including bridge crane system, operator space, and laydown area), MBR Control Building (including RAS Pump Room, chemical storage rooms, equipment rooms, electrical rooms, and 2nd floor), installation of all equipment furnished under the MBR procurement contract to be assigned (See LS-5b). Coordination with MBR Vendor, Owner and Operator for startup of MBR system, and any necessary temporary work measures for MBR construction sequencing, etc. Includes all mechanical, electrical, and plumbing for completed work. Includes process piping within 5' of buildings and structures.

7.06 *LS-5b- Assigned Procured Contract – Veolia Water Technologies & Solutions (F.K.A. Suez WTS USA, Inc.)*

A. Contractor shall assume the executed contract between the Town of New Windsor and Veolia Water Technologies & Solutions (F.K.A. Suez WTS USA, Inc.) for the furnishing materials and equipment, supply, start-up, commissioning, performance testing, and operator training of the proposed membrane bioreactor (MBR) system. Assumed contract is attached to this contract as Exhibit I.

7.07 *LS-6-Post-Aeration and Backpulse*

A. Generally, the work as shown in the 600-series project drawings including, but not limited to: Modifications to existing disinfection tank (diffusers, air piping, probes and sensors, baffle wall extensions, weirs, gates, valves, etc.), install of new post-aeration platform and post-aeration blowers, construction of new backpulse tank, valve vault and associated pumps and piping, install of plant water system equipment (not inclusive of site plant water piping), and any necessary temporary work measures for Post-Aeration construction sequencing, etc. Includes all electrical for completed work. Includes process piping within 5' of structures.

Copyright© 2018 National Society of Professional Engineers, American Council of Engineering Companies, and American Society of Civil Engineers. All rights reserved.

7.08 *LS-7- Dewatering Building*

A. Generally, the work as shown in the 700-series project drawings, including but not limited to: Modifications and renovations to the existing plant control building for conversion to plant dewatering building, furnish and install of new dewatering belt press and associated equipment, new joint sludge conveyance system, new belt press chemical feed system, modifications to existing dewatering equipment to coordinate with new installation, ground floor demolition and slab work to accommodate second sludge storage dumpster bay, overall building interior and exterior renovations and repairs, and any necessary temporary work measures for Dewatering Building construction sequencing, etc. Includes all mechanical, electrical, and plumbing for completed work. Includes process piping within 5' of building.

7.09 *LS-8- Existing Plant Infrastructure Demolition Work*

A. Generally, the work as shown in the 800-series project drawings, including but not limited to: Complete or partial demolition work to existing secondary settling tanks, trickling filter tanks and distribution chamber, secondary pump pit, and sludge thickener tanks, any necessary temporary work measures for proposed construction sequencing, and proper disposal of all materials. Includes all associated piping within 5' of structure. Includes all mechanical, electrical, and plumbing for completed work. Includes required coordination for Engineer submission of NYSDEC Closure Report(s).

7.10 *LS-9- New Workshop Garage Building*

A. Generally, the work as shown in the 900-series project drawings including, but not limited to: Construction of a new pre-engineered metal building, associated concrete foundation, and associated site work, etc. This item also includes electrical modifications in the Plant Control Building as shown on Sheet E-900. Includes all mechanical, electrical, and plumbing for completed work.

7.11 *LS-10- Hazardous Material Abatement (Excludes Demolition of Transite Pipe)*

A. Abatement of all hazardous materials including asbestos and lead for all items identified in the Asbestos and Lead Reports which are included as part of this document. Included in this bid items are all controls for handling and disposal. Demolition and/or removal of transite pipe is not included.

7.12 *LS-11 Mobilization and General Conditions*

A. Including, but not limited to, submittals, bonds, insurance, permits and fees, coordination with Engineer, Owner, Utility Owners and private Property Owners, project layout, mark outs, maintenance and protection of traffic needed to protect the public from damage to person and property within the limits of and the duration of the contract, general restoration, clean up and demobilization, general conditions compliance, Division 0 & 1 Specification Contract Requirements, temporary facilities, record drawings, EFC Terms and Conditions for funding. Contractor is permitted to bill equal monthly payments based on designated contract completion time.

7.13 *C-1 – Rock Excavation*

A. Rock Excavation, including Removal, Disposal, Select Fill Backfill Material, Compaction, Compaction Testing, complete. Including:

Minimum Bid Price - $100.00 per cubic yard

Maximum Bid Price - $200.00 per cubic yard

Copyright© 2018 National Society of Professional Engineers, American Council of Engineering Companies, and American Society of Civil Engineers. All rights reserved.

7.14 *C-2 –Roadway Subbase Material*

A. Additional Roadway Subbase Material, including material, excavation, disposal, compaction, compaction testing, in-place, complete.

7.15 *C-3 – Select Backfill*

A. Additional Select Backfill material per specifications, including excavation, disposal, placement, compaction, testing, in place, complete.

7.16 *C-4 – Crushed Stone*

A. Additional crushed stone foundation material, including excavation, disposal in-place, complete.

7.17 *C-5 – Additional CIP Concrete*

A. Additional cast-in-place concrete per Specification 033000 as directed by the engineer, including removal of deleterious material, disposal, forms, steel reinforcement, curing, testing, in place, complete.

7.18 *C-6 – Controlled Density Fill*

A. Furnish and place controlled density fill as directed by engineer, in place, complete.

7.19 *C-7 – Bituminous Concrete Pavement*

A. Additional bituminous concrete pavement replacement, thickeners per pavement restoration detail, including fine grading, tack coat, in place, complete.

7.20 *C-8 –Stabilization Woven Geotextile Fabric*

A. Additional Subgrade Stabilization Woven Geosynthetic**,** including furnish and install geosynthetic fabric typical of Tencate Mirafi 1100N, or acceptable equal.

7.21 *C-9 – Liquid Sludge Disposal*

A. Contractor to pump, haul and properly dispose of sludge contained in existing secondary settling tanks and gravity thickeners prior to demolition. Coordination with operator.

7.22 *C-10 – Concrete Repair Type 1*

A. Removal and patching of unsound concrete up to a depth of 1.5” or no exposed reinforcing steel, in place, complete. Install per Detail 2 on Plan Sheet C-301. Limits as determined by Engineer.

7.23 *C-11 – Concrete Repair Type 2*

A. Removal, reinforcing, and patching of unsound concrete in areas exceeding 1.5” depth or having exposed reinforcing steel, in place, complete. Install per Detail 3 on Plan Sheet C-301. Limits as determined by Engineer.

7.24 *C-12 – Concrete Repair Type 3*

A. Full depth concrete repairs at damaged locations along tops of existing tank walls, in place, complete. Install per Detail 4 on Plan Sheet C-301. Limits as determined by Engineer.

Copyright© 2018 National Society of Professional Engineers, American Council of Engineering Companies, and American Society of Civil Engineers. All rights reserved.

7.25 *C-13 – Demolition of Transite Pipe*

A. Demolition of Transite Pipe: Removal of pipe identified as containing hazardous materials, including proper handling and disposal in accordance with all Federal, State and Local Laws and Regulations, and hazardous materials specifications and drawings.

7.26 *C-14 – Bollard*

A. Additional bollards installed per Detail 13 on Plan Sheet C-142. Including excavation, concrete, bollard column sleeve installation, finishing, in place, complete.

7.27 *A-1 – Contingency Allowance: General Construction Allowance*

A. For use as directed by the Owner for unforeseen conditions related to the work.

7.28 *A-2 – Cash Allowance: Aqualogics Systems, Inc: Controls Integration and Equipment*

A. Contractor shall enter into a contract with Aqualogics Systems, Inc for the furnishing and installation of equipment in conjunction with the Town's SCADA monitoring system as called for in the Contract Documents. This would generally include the site I/O panels, main control panel, desktop computer, remote access tablet, all hardware, software, programming, screen development, integration, start-up and training services. The contract is attached to this contract as Exhibit I.

7.29 *A-3 – Cash Allowance: Veolia Contract Escalation and Additional Scope Change Order*

A. Allowance to cover anticipated escalation costs in accordance with the executed Veolia Water Technologies & Solutions (F.K.A. Suez WTS USA, Inc.) contract to be assumed by the Contractor. A cost escalation package provided by Veolia is attached to this contract as Exhibit K. This allowance will also cover anticipated scope changes to Veolia's contract. A list of additional scope items and approximate costs are attached to this contract as Exhibit J.

7.30 *A-4 – Cash Allowance:* D-BEN Security Systems, Inc.

A. Contractor shall enter into a contract with the Town's selected vendor (D-Ben Security Systems, Inc) for furnishing of equipment for security access control, cameras and fire alarm system. A list of equipment and quote is attached to this contract as Exhibit L. The allowance includes the equipment cost ONLY. Installation is to be performed by the contractor and included within their base bid. To clarify, the fire alarm system, control panel, and all associated equipment, components, and devices (horns, strobes, pull stations, smoke detectors, heat detectors, carbon monoxide detectors, annunciators, control relays, power supplies, etc.), and security system (access control equipment and cameras) as shown on the contract drawings are to be furnished (supplied) by the owner's preferred vendor (D-Ben Security Systems, Inc) thru the allowance stated above. The contractor is responsible for all circuitry (conduit and conductors) between devices as shown and specified on the contract drawings, as well as the installation and termination of these devices per the manufacturer's requirements and included in their base bid.

Copyright© 2018 National Society of Professional Engineers, American Council of Engineering Companies, and American Society of Civil Engineers. All rights reserved.

BIDDER hereby submits this Bid as set forth above:

Bidder:

_____

(typed or printed name of organization)

By: _____

(individual's signature)

Name: _____

(typed or printed)

Title: _____

(typed or printed)

Date: _____

(typed or printed)

If Bidder is a corporation, a partnership, or a joint venture, attach evidence of authority to sign.

Attest: _____

(individual's signature)

Name: _____

(typed or printed)

Title: _____

(typed or printed)

Date: _____

(typed or printed)

Address for giving notices:

_____

_____

Bidder's Contact:

Name: _____

(typed or printed)

Title: _____

(typed or printed)

Phone: _____

Email: _____

Address:

_____

_____

_____

Bidder's Contractor License No.: (if applicable) _____

Copyright© 2018 National Society of Professional Engineers, American Council of Engineering Companies, and American Society of Civil Engineers. All rights reserved.

AFFIDAVIT OF COMPLIANCE WITH
NEW YORK STATE ANTI-SEXUAL HARASSMENT LAWS

State of NEW YORK)
) SS. :
COUNTY OF _____)

I,_____ of the (Town, Village, City) of _____ in the County of _____ and the State of _____ of full age, being duly sworn according to law on my oath depose and say that:

I am _____, an officer of the firm of _____ the bidder making the Proposal for the above named work, and that I executed the said Proposal with full authority to do so; that by submission of this bid, each bidder and each person signing on behalf of any bidder certifies, and in the case of a joint bid each party thereto certifies as to its own organization, under penalty of perjury, that the bidder has and has implemented a written policy addressing sexual harassment prevention in the workplace and provides annual sexual harassment prevention training to all of its employees, and made with the full knowledge that_____, as Owner relies upon the truth of the statements herein. Such policy shall, at a minimum, meet the requirements of section two hundred one-g of the labor law. I further agree and attest that I will also comply with the provisions of the Owner's Anti-Sexual Harassment Policy (as applicable, if attached herein this document in the Instructions to Bidders)

_____.
(Name of Contractor)

Subscribed and sworn to

_____
(Also type or print name and title of
affiant under signature)-+

before me this _____ day

of_____2025.

_____
Notary Public of

My commission expires _____, 20__

THIS AFFIDAVIT MUST BE COMPLETED BY ALL BIDDERS

WICKS LAW FORM

Pursuant to the 2008 Wicks Law Reforms, each Bidder must submit this form in a sealed envelope with their bid complete the following Subcontractor Identification Form:

The sealed envelope submitted by the "low bidder" shall be opened and read aloud as part of the bid opening procedure. The sealed envelopes submitted by other than the "low bidder" will be returned to the respective bidders unopened after award of the contract by the Owner.

TRADE	SUB-CONTRACTOR NAME	AMOUNT TO BE PAID TO SUB-CONTRACTOR
PLUMBING		
HEATING, VENTILATION AND AIR CONDITIONING		
ELECTRICAL		

NEW YORK STATE WAGE RATES

Town of New Windsor

Michael Weeks
111 Wheatfield Drive
Sutie 1
Milford PA 18337

Schedule Year 2024 through 2025
Date Requested 04/11/2025
PRC# 2025004453

Location Town of New Windsor
Project ID#
Project Type Construction of new WWTP infrastructure including buildings, tanks, equipment, and various process structures, improvements and modifications to existing plant infrastructure, and complete/partial

PREVAILING WAGE SCHEDULE FOR ARTICLE 8 PUBLIC WORK PROJECT

Attached is the current schedule(s) of the prevailing wage rates and prevailing hourly supplements for the project referenced above. A unique Prevailing Rate Case Number (PRC#) has been assigned to the schedule(s) for your project.

The schedule is effective from July 2024 through June 2025. All updates, corrections, posted on the 1st business day of each month, and future copies of the annual determination are available on the Department's website www.labor.ny.gov. Updated PDF copies of your schedule can be accessed by entering your assigned PRC# at the proper location on the website.

It is the responsibility of the contracting agency or its agent to annex and make part, the attached schedule, to the specifications for this project, when it is advertised for bids and /or to forward said schedules to the successful bidder(s), immediately upon receipt, in order to insure the proper payment of wages.

Please refer to the "General Provisions of Laws Covering Workers on Public Work Contracts" provided with this schedule, for the specific details relating to other responsibilities of the Department of Jurisdiction.

Upon completion or cancellation of this project, enter the required information and mail **OR** fax this form to the office shown at the bottom of this notice, **OR** fill out the electronic version via the NYSDOL website.

NOTICE OF COMPLETION / CANCELLATION OF PROJECT

Date Completed: _____ Date Cancelled: _____

Name & Title of Representative: _____

Phone: (518) 457-5589 Fax: (518) 485-1870
W. Averell Harriman State Office Campus, Bldg. 12, Room 130, Albany, NY 12240

General Provisions of Laws Covering Workers on Article 8 Public Work Contracts

Introduction

The Labor Law requires public work contractors and subcontractors to pay laborers, workers, or mechanics employed in the performance of a public work contract not less than the prevailing rate of wage and supplements (fringe benefits) in the locality where the work is performed.

Responsibilities of the Department of Jurisdiction

A Department of Jurisdiction (Contracting Agency) includes a state department, agency, board or commission: a county, city, town or village; a school district, board of education or board of cooperative educational services; a sewer, water, fire, improvement and other district corporation; a public benefit corporation; and a public authority awarding a public work contract.

The Department of Jurisdiction (Contracting Agency) awarding a public work contract MUST obtain a Prevailing Rate Schedule listing the hourly rates of wages and supplements due the workers to be employed on a public work project. This schedule may be obtained by completing and forwarding a "Request for wage and Supplement Information" form (PW 39) to the Bureau of Public Work. The Prevailing Rate Schedule MUST be included in the specifications for the contract to be awarded and is deemed part of the public work contract.

Upon the awarding of the contract, the law requires that the Department of Jurisdiction (Contracting Agency) furnish the following information to the Bureau: the name and address of the contractor, the date the contract was let and the approximate dollar value of the contract. To facilitate compliance with this provision of the Labor Law, a copy of the Department's "Notice of Contract Award" form (PW 16) is provided with the original Prevailing Rate Schedule.

The Department of Jurisdiction (Contracting Agency) is required to notify the Bureau of the completion or cancellation of any public work project. The Department's PW 200 form is provided for that purpose.

Both the PW 16 and PW 200 forms are available for completion online.

Hours

No laborer, worker, or mechanic in the employ of a contractor or subcontractor engaged in the performance of any public work project shall be permitted to work more than eight hours in any day or more than five days in any week, except in cases of extraordinary emergency. The contractor and the Department of Jurisdiction (Contracting Agency) may apply to the Bureau of Public Work for a dispensation permitting workers to work additional hours or days per week on a particular public work project.

Wages and Supplements

The wages and supplements to be paid and/or provided to laborers, workers, and mechanics employed on a public work project shall be not less than those listed in the current Prevailing Rate Schedule for the locality where the work is performed. If a prime contractor on a public work project has not been provided with a Prevailing Rate Schedule, the contractor must notify the Department of Jurisdiction (Contracting Agency) who in turn must request an original Prevailing Rate Schedule form the Bureau of Public Work. Requests may be submitted by: mail to NYSDOL, Bureau of Public Work, State Office Bldg. Campus, Bldg. 12, Rm. 130, Albany, NY 12226; Fax to Bureau of Public Work (518) 485-1870; or electronically at the NYSDOL website www.labor.ny.gov.

Upon receiving the original schedule, the Department of Jurisdiction (Contracting Agency) is REQUIRED to provide complete copies to all prime contractors who in turn MUST, by law, provide copies of all applicable county schedules to each subcontractor and obtain from each subcontractor, an affidavit certifying such schedules were received. If the original schedule expired, the contractor may obtain a copy of the new annual determination from the NYSDOL website www.labor.ny.gov.

The Commissioner of Labor makes an annual determination of the prevailing rates. This determination is in effect from July 1st through June 30th of the following year. The annual determination is available on the NYSDOL website www.labor.ny.gov.

Payrolls and Payroll Records

Every contractor and subcontractor MUST keep original payrolls or transcripts subscribed and affirmed as true under penalty of perjury. As per Article 6 of the Labor law, contractors and subcontractors are required to establish, maintain, and preserve for not less than six (6) years, contemperaneous, true, and accurate payroll records. At a minimum, payrolls must show the following information for each person employed on a public work project: Name, Address, Last 4 Digits of Social Security Number, Classification(s) in which the worker was employed, Hourly wage rate(s) paid, Supplements paid or provided, and Daily and weekly number of hours worked in each classification.

The filing of payrolls to the Department of Jurisdiction is a condition of payment.Every contractor and subcontractor shall submit to the Department of Jurisdiction (Contracting Agency), within thirty (30) days after issuance of its first payroll and every thirty (30) days thereafter, a transcript of the original payrolls, subscribed and affirmed as true under penalty of perjury. The Department of Jurisdiction (Contracting Agency) shall collect, review for facial validity, and maintain such payrolls.

In addition, the Commissioner of Labor may require contractors to furnish, with ten (10) days of a request, payroll records sworn to as their validity and accuracy for public work and private work. Payroll records include, but are not limited to time cards, work description sheets, proof that supplements were provided, cancelled payroll checks and payrolls. Failure to provide the requested information within the allotted ten (10) days will result in the withholding of up to 25% of the contract, not to exceed $100,000.00. If the contractor or subcontractor does not maintain a place of business in New York State and the amount of the contract exceeds $25,000.00, payroll records and certifications must be kept on the project worksite.

The prime contractor is responsible for any underpayments of prevailing wages or supplements by any subcontractor.

All contractors or their subcontractors shall provide to their subcontractors a copy of the Prevailing Rate Schedule specified in the public work contract as well as any subsequently issued schedules. A failure to provide these schedules by a contractor or subcontractor is a violation of Article 8, Section 220-a of the Labor Law.

All subcontractors engaged by a public work project contractor or its subcontractor, upon receipt of the original schedule and any subsequently issued schedules, shall provide to such contractor a verified statement attesting that the subcontractor has received the Prevailing Rate Schedule and will pay or provide the applicable rates of wages and supplements specified therein. (See NYS Labor Laws, Article 8 . Section 220-a).

Determination of Prevailing Wage and Supplement Rate Updates Applicable to All Counties

The wages and supplements contained in the annual determination become effective July 1st whether or not the new determination has been received by a given contractor. Care should be taken to review the rates for obvious errors. Any corrections should be brought to the Department's attention immediately. It is the responsibility of the public work contractor to use the proper rates. If there is a question on the proper classification to be used, please call the district office located nearest the project. Any errors in the annual determination will be corrected and posted to the NYSDOL website on the first business day of each month. Contractors are responsible for paying these updated rates as well, retroactive to July 1st.

When you review the schedule for a particular occupation, your attention should be directed to the dates above the column of rates. These are the dates for which a given set of rates is effective. To the extent possible, the Department posts rates in its possession that cover periods of time beyond the July 1st to June 30th time frame covered by a particular annual determination. Rates that extend beyond that instant time period are informational ONLY and may be updated in future annual determinations that actually cover the then appropriate July 1st to June 30th time period.

Withholding of Payments

When a complaint is filed with the Commissioner of Labor alleging the failure of a contractor or subcontractor to pay or provide the prevailing wages or supplements, or when the Commissioner of Labor believes that unpaid wages or supplements may be due, payments on the public work contract shall be withheld from the prime contractor in a sufficient amount to satisfy the alleged unpaid wages and supplements, including interest and civil penalty, pending a final determination.

When the Bureau of Public Work finds that a contractor or subcontractor on a public work project failed to pay or provide the requisite prevailing wages or supplements, the Bureau is authorized by Sections 220-b and 235.2 of the Labor Law to so notify the financial officer of the Department of Jurisdiction (Contracting Agency) that awarded the public work contract. Such officer MUST then withhold or cause to be withheld from any payment due the prime contractor on account of such contract the amount indicated by the Bureau as sufficient to satisfy the unpaid wages and supplements, including interest and any civil penalty that may be assessed by the Commissioner of Labor. The withholding continues until there is a final determination of the underpayment by the Commissioner of Labor or by the court in the event a legal proceeding is instituted for review of the determination of the Commissioner of Labor.

The Department of Jurisdiction (Contracting Agency) shall comply with this order of the Commissioner of Labor or of the court with respect to the release of the funds so withheld.

Summary of Notice Posting Requirements

The current Prevailing Rate Schedule must be posted in a prominent and accessible place on the site of the public work project. The prevailing wage schedule must be encased in, or constructed of, materials capable of withstanding adverse weather conditions and be titled "PREVAILING RATE OF WAGES" in letters no smaller than two (2) inches by two (2) inches.

The "Public Work Project" notice must be posted at the beginning of the performance of every public work contract, on each job site.

Every employer providing workers. compensation insurance and disability benefits must post notices of such coverage in the format prescribed by the Workers. Compensation Board in a conspicuous place on the jobsite.

Every employer subject to the NYS Human Rights Law must conspicuously post at its offices, places of employment, or employment training centers, notices furnished by the State Division of Human Rights.

Employers liable for contributions under the Unemployment Insurance Law must conspicuously post on the jobsite notices furnished by the NYS Department of Labor.

Apprentices

Employees cannot be paid apprentice rates unless they are individually registered in a program registered with the NYS Commissioner of Labor. The allowable ratio of apprentices to journeyworkers in any craft classification can be no greater than the statewide building trade ratios promulgated by the Department of Labor and included with the Prevailing Rate Schedule. An employee listed on a payroll as an apprentice who is not registered as above or is performing work outside the classification of work for which the apprentice is indentured, must be paid the prevailing journeyworker's wage rate for the classification of work the employee is actually performing.

NYSDOL Labor Law, Article 8, Section 220-3, require that only apprentices individually registered with the NYS Department of Labor may be paid apprenticeship rates on a public work project. No other Federal or State Agency of office registers apprentices in New York State.

Persons wishing to verify the apprentice registration of any person must do so in writing by mail, to the NYSDOL Office of Employability Development / Apprenticeship Training, State Office Bldg. Campus, Bldg. 12, Albany, NY 12226 or by Fax to NYSDOL Apprenticeship Training (518) 457-7154. All requests for verification must include the name and social security number of the person for whom the information is requested.

The only conclusive proof of individual apprentice registration is written verification from the NYSDOL Apprenticeship Training Albany Central office. Neither Federal nor State Apprenticeship Training offices outside of Albany can provide conclusive registration information.

It should be noted that the existence of a registered apprenticeship program is not conclusive proof that any person is registered in that program. Furthermore, the existence or possession of wallet cards, identification cards, or copies of state forms is not conclusive proof of the registration of any person as an apprentice.

Interest and Penalties

In the event that an underpayment of wages and/or supplements is found:

- Interest shall be assessed at the rate then in effect as prescribed by the Superintendent of Banks pursuant to section 14-a of the Banking Law, per annum from the date of underpayment to the date restitution is made.
- A Civil Penalty may also be assessed, not to exceed 25% of the total of wages, supplements, and interest due.

Debarment

Any contractor or subcontractor and/or its successor shall be ineligible to submit a bid on or be awarded any public work contract or subcontract with any state, municipal corporation or public body for a period of five (5) years when:

- Two (2) willful determinations have been rendered against that contractor or subcontractor and/or its successor within any consecutive six (6) year period.
- There is any willful determination that involves the falsification of payroll records or the kickback of wages or supplements.

Criminal Sanctions

Willful violations of the Prevailing Wage Law (Article 8 of the Labor Law) may be a felony punishable by fine or imprisonment of up to 15 years, or both.

Discrimination

No employee or applicant for employment may be discriminated against on account of age, race, creed, color, national origin, sex, disability or marital status.

No contractor, subcontractor nor any person acting on its behalf, shall by reason of race, creed, color, disability, sex or national origin discriminate against any citizen of the State of New York who is qualified and available to perform the work to which the employment relates (NYS Labor Law, Article 8, Section 220-e(a)).

No contractor, subcontractor, nor any person acting on its behalf, shall in any manner, discriminate against or intimidate any employee on account of race, creed, color, disability, sex, or national origin (NYS Labor Law, Article 8, Section 220-e(b)).

The Human Rights Law also prohibits discrimination in employment because of age, marital status, or religion.

There may be deducted from the amount payable to the contractor under the contract a penalty of $50.00 for each calendar day during which such person was discriminated against or intimidated in violation of the provision of the contract (NYS Labor Law, Article 8, Section 220-e(c)).

The contract may be cancelled or terminated by the State or municipality. All monies due or to become due thereunder may be forfeited for a second or any subsequent violation of the terms or conditions of the anti-discrimination sections of the contract (NYS Labor Law, Article 8, Section 220-e(d)).

Every employer subject to the New York State Human Rights Law must conspicuously post at its offices, places of employment, or employment training centers notices furnished by the State Division of Human Rights.

Workers' Compensation

In accordance with Section 142 of the State Finance Law, the contractor shall maintain coverage during the life of the contract for the benefit of such employees as required by the provisions of the New York State Workers' Compensation Law.

A contractor who is awarded a public work contract must provide proof of workers' compensation coverage prior to being allowed to begin work.

The insurance policy must be issued by a company authorized to provide workers' compensation coverage in New York State. Proof of coverage must be on form C-105.2 (Certificate of Workers' Compensation Insurance) and must name this agency as a certificate holder.

If New York State coverage is added to an existing out-of-state policy, it can only be added to a policy from a company authorized to write workers' compensation coverage in this state. The coverage must be listed under item 3A of the information page.

The contractor must maintain proof that subcontractors doing work covered under this contract secured and maintained a workers' compensation policy for all employees working in New York State.

Every employer providing worker's compensation insurance and disability benefits must post notices of such coverage in the format prescribed by the Workers' Compensation Board in a conspicuous place on the jobsite.

Unemployment Insurance

Employers liable for contributions under the Unemployment Insurance Law must conspicuously post on the jobsite notices furnished by the New York State Department of Labor.

Kathy Hochul, Governor

Roberta Reardon, Commissioner

Town of New Windsor

Michael Weeks
111 Wheatfield Drive
Sutie 1
Milford PA 18337

Schedule Year 2024 through 2025
Date Requested 04/11/2025
PRC# 2025004453

Location Town of New Windsor
Project ID#
Project Type Construction of new WWTP infrastructure including buildings, tanks, equipment, and various process structures, improvements and modifications to existing plant infrastructure, and complete/partial

Notice of Contract Award

New York State Labor Law, Article 8, Section 220.3a requires that certain information regarding the awarding of public work contracts, be furnished to the Commissioner of Labor. One "Notice of Contract Award" (PW 16, which may be photocopied), **MUST** be completed for **EACH** prime contractor on the above referenced project.

Upon notifying the successful bidder(s) of this contract, enter the required information and mail **OR** fax this form to the office shown at the bottom of this notice, **OR** fill out the electronic version via the NYSDOL website.

Contractor Information
All information must be supplied

Federal Employer Identification Number: _____

Name: _____

Address: _____

_____

City: _____ State: _____ Zip: _____

Amount of Contract: $_____

Approximate Starting Date: ____/____/____

Approximate Completion Date: ____/____/____

Contract Type:
[ ] (01) General Construction
[ ] (02) Heating/Ventilation
[ ] (03) Electrical
[ ] (04) Plumbing
[ ] (05) Other : _____

Phone: (518) 457-5589 Fax: (518) 485-1870
W. Averell Harriman State Office Campus, Bldg. 12, Room 130, Albany, NY 12226

Social Security Numbers on Certified Payrolls:

The Department of Labor is cognizant of the concerns of the potential for misuse or inadvertent disclosure of social security numbers. Identity theft is a growing problem and we are sympathetic to contractors' concern regarding inclusion of this information on payrolls if another identifier will suffice.

For these reasons, the substitution of the use of the last four digits of the social security number on certified payrolls submitted to contracting agencies on public work projects is now acceptable to the Department of Labor. This change does not affect the Department's ability to request and receive the entire social security number from employers during its public work/ prevailing wage investigations.

Construction Industry Fair Play Act: Required Posting for Labor Law Article 25-B § 861-d

Construction industry employers must post the "Construction Industry Fair Play Act" notice in a prominent and accessible place on the job site. Failure to post the notice can result in penalties of up to $1,500 for a first offense and up to $5,000 for a second offense. The posting is included as part of this wage schedule. Additional copies may be obtained from the NYS DOL website, https://dol.ny.gov/public-work-and-prevailing-wage
If you have any questions concerning the Fair Play Act, please call the State Labor Department toll-free at 1-866-435-1499 or email us at: dol.misclassified@labor.ny.gov .

Worker Notification: (Labor Law §220, paragraph a of subdivision 3-a)

Effective June 23, 2020

This provision is an addition to the existing wage rate law, Labor Law §220, paragraph a of subdivision 3-a. It requires contractors and subcontractors to provide written notice to all laborers, workers or mechanics of the *prevailing wage and supplement rate* for their particular job classification *on each pay stub**. It also requires contractors and subcontractors to *post a notice* at the beginning of the performance of every public work contract *on each job site* that includes the telephone number and address for the Department of Labor and a statement informing laborers, workers or mechanics of their right to contact the Department of Labor if he/she is not receiving the proper prevailing rate of wages and/or supplements for his/her job classification. The required notification will be provided with each wage schedule, may be downloaded from our website *www.labor.ny.gov* or be made available upon request by contacting the Bureau of Public Work at 518-457-5589. *In the event the required information will not fit on the pay stub, an accompanying sheet or attachment of the information will suffice.

(12.20)

To all State Departments, Agency Heads and Public Benefit Corporations
IMPORTANT NOTICE REGARDING PUBLIC WORK ENFORCEMENT FUND

Budget Policy & Reporting Manual

B-610

Public Work Enforcement Fund

effective date December 7, 2005

---

1. Purpose and Scope:

This Item describes the Public Work Enforcement Fund (the Fund, PWEF) and its relevance to State agencies and public benefit corporations engaged in construction or reconstruction contracts, maintenance and repair, and announces the recently-enacted increase to the percentage of the dollar value of such contracts that must be deposited into the Fund. This item also describes the roles of the following entities with respect to the Fund:

- New York State Department of Labor (DOL),
- The Office of the State of Comptroller (OSC), and
- State agencies and public benefit corporations.

2. Background and Statutory References:

DOL uses the Fund to enforce the State's Labor Law as it relates to contracts for construction or reconstruction, maintenance and repair, as defined in subdivision two of Section 220 of the Labor Law. State agencies and public benefit corporations participating in such contracts are required to make payments to the Fund.

Chapter 511 of the Laws of 1995 (as amended by Chapter 513 of the Laws of 1997, Chapter 655 of the Laws of 1999, Chapter 376 of the Laws of 2003 and Chapter 407 of the Laws of 2005) established the Fund.

3. Procedures and Agency Responsibilities:

The Fund is supported by transfers and deposits based on the value of contracts for construction and reconstruction, maintenance and repair, as defined in subdivision two of Section 220 of the Labor Law, into which all State agencies and public benefit corporations enter.

Chapter 407 of the Laws of 2005 increased the amount required to be provided to this fund to .10 of one-percent of the total cost of each such contract, to be calculated at the time agencies or public benefit corporations enter into a new contract or if a contract is amended. The provisions of this bill became effective August 2, 2005.

To all State Departments, Agency Heads and Public Benefit Corporations
IMPORTANT NOTICE REGARDING PUBLIC WORK ENFORCEMENT FUND

OSC will report to DOL on all construction-related ("D") contracts approved during the month, including contract amendments, and then DOL will bill agencies the appropriate assessment monthly. An agency may then make a determination if any of the billed contracts are exempt and so note on the bill submitted back to DOL. For any instance where an agency is unsure if a contract is or is not exempt, they can call the Bureau of Public Work at the number noted below for a determination. Payment by check or journal voucher is due to DOL within thirty days from the date of the billing. DOL will verify the amounts and forward them to OSC for processing.

For those contracts which are not approved or administered by the Comptroller, monthly reports and payments for deposit into the Public Work Enforcement Fund must be provided to the Administrative Finance Bureau at the DOL within 30 days of the end of each month or on a payment schedule mutually agreed upon with DOL.

Reports should contain the following information:

- Name and billing address of State agency or public benefit corporation;
- State agency or public benefit corporation contact and phone number;
- Name and address of contractor receiving the award;
- Contract number and effective dates;
- Contract amount and PWEF assessment charge (if contract amount has been amended, reflect increase or decrease to original contract and the adjustment in the PWEF charge); and
- Brief description of the work to be performed under each contract.

Checks and Journal Vouchers, payable to the "New York State Department of Labor" should be sent to:

Department of Labor
Administrative Finance Bureau-PWEF Unit
Building 12, Room 464
State Office Campus
Albany, NY 12226

Any questions regarding billing should be directed to NYSDOL's Administrative Finance Bureau-PWEF Unit at (518) 457-3624 and any questions regarding Public Work Contracts should be directed to the Bureau of Public Work at (518) 457-5589.

NEW YORK STATE OF OPPORTUNITY. Department of Labor

Required Notice under Article 25-B of the Labor Law

Attention All Employees, Contractors and Subcontractors: You are Covered by the Construction Industry Fair Play Act

The law says that you are an employee unless:

- You are free from direction and control in performing your job, **and**
- You perform work that is not part of the usual work done by the business that hired you, **and**
- You have an independently established business.

Your employer cannot consider you to be an independent contractor unless all three of these facts apply to your work.

It is against the law for an employer to misclassify employees as independent contractors or pay employees off the books.

Employee Rights: If you are an employee, you are entitled to state and federal worker protections. These include:

- Unemployment Insurance benefits, if you are unemployed through no fault of your own, able to work, and otherwise qualified,
- Workers' compensation benefits for on-the-job injuries,
- Payment for wages earned, minimum wage, and overtime (under certain conditions),
- Prevailing wages on public work projects,
- The provisions of the National Labor Relations Act, and
- A safe work environment.

It is a violation of this law for employers to retaliate against anyone who asserts their rights under the law. Retaliation subjects an employer to civil penalties, a private lawsuit or both.

Independent Contractors: If you are an independent contractor**, you must pay all taxes and Unemployment Insurance contributions required by New York State and Federal Law.**

Penalties for paying workers off the books or improperly treating employees as independent contractors:

• **Civil Penalty**	First offense: Up to $2,500 per employee Subsequent offense(s): Up to $5,000 per employee
• **Criminal Penalty**	First offense: Misdemeanor - up to 30 days in jail, up to a $25,000 fine and debarment from performing public work for up to one year. Subsequent offense(s): Misdemeanor - up to 60 days in jail or up to a $50,000 fine and debarment from performing public work for up to 5 years.

If you have questions about your employment status or believe that your employer may have violated your rights and you want to file a complaint, call the Department of Labor at (866) 435-1499 or send an email to dol.misclassified@labor.ny.gov. All complaints of fraud and violations are taken seriously. You can remain anonymous.

Employer Name:

IA 999 (09/16)

WE ARE YOUR DOL

NEW YORK STATE Department of Labor

New York State Department of Labor
Bureau of Public Work

Attention Employees

THIS IS A:

PUBLIC WORK PROJECT

If you are employed on this project as a **worker, laborer, or mechanic** you are entitled to receive the **prevailing wage and supplements rate** for the classification at which you are working.

Your pay stub and wage notice received upon hire must clearly state your wage rate and supplement rate.

Chapter 629 of the Labor Laws of 2007:

These wages are set by law and must be posted at the work site. They can also be found at: https://dol.ny.gov/bureau-public-work

If you feel that you have not received proper wages or benefits, please call our nearest office.*

Albany	(518) 457-2744	Patchogue	(631) 687-4882
Binghamton	(607) 721-8005	Rochester	(585) 258-4505
Buffalo	(716) 847-7159	Syracuse	(315) 428-4056
Garden City	(516) 228-3915	Utica	(315) 793-2314
New York City	(212) 932-2419	White Plains	(914) 997-9507
Newburgh	(845) 568-5287		

* For New York City government agency construction projects, please contact the Office of the NYC Comptroller at (212) 669-4443, or www.comptroller.nyc.gov – click on Bureau of Labor Law.

Contractor Name: _____

Project Location: _____

Requirements for OSHA 10 Compliance

Article 8 §220-h requires that when the advertised specifications, for every contract for public work, is $250,000.00 or more the contract must contain a provision requiring that every worker employed in the performance of a public work contract shall be certified as having completed an OSHA 10 safety training course. The clear intent of this provision is to require that all employees of public work contractors, required to be paid prevailing rates, receive such training "prior to the performing any work on the project."

The Bureau will enforce the statute as follows:

All contractors and sub contractors must attach a copy of proof of completion of the OSHA 10 course to the first certified payroll submitted to the contracting agency and on each succeeding payroll where any new or additional employee is first listed.

Proof of completion may include but is not limited to:

- Copies of bona fide course completion card (*Note: Completion cards do not have an expiration date.)*
- Training roster, attendance record of other documentation from the certified trainer pending the issuance of the card.
- Other valid proof

**A certification by the employer attesting that all employees have completed such a course is not sufficient proof that the course has been completed.

Any questions regarding this statute may be directed to the New York State Department of Labor, Bureau of Public Work at 518-457-5589.

WICKS

Public work projects are subject to the Wicks Law requiring separate specifications and bidding for the plumbing, heating and electrical work, when the total project's threshold is $3 million in Bronx, Kings, New York, Queens and, Richmond counties; $1.5 million in Nassau, Suffolk and Westchester counties; and $500,000 in all other counties.

For projects below the monetary threshold, bidders must submit a sealed list naming each subcontractor for the plumbing, HVAC and electrical and the amount to be paid to each. The list may not be changed unless the public owner finds a legitimate construction need, including a change in specifications or costs or the use of a Project Labor Agreement (PLA), and must be open to public inspection.

Allows the state and local agencies and authorities to waive the Wicks Law and use a PLA if it will provide the best work at the lowest possible price. If a PLA is used, all contractors shall participate in apprentice training programs in the trades of work it employs that have been approved by the Department of Labor (DOL) for not less than three years. They shall also have at least one graduate in the last three years and use affirmative efforts to retain minority apprentices. PLA's would be exempt from Wicks, but deemed to be public work subject to prevailing wage enforcement.

The Commissioner of Labor shall have the power to enforce separate specification requirement s on projects, and may issue stop-bid orders against public owners for non-compliance.

Other new monetary thresholds, and similar sealed bidding for non-Wicks projects, would apply to certain public authorities including municipal housing authorities, NYC Construction Fund, Yonkers Educational Construction Fund, NYC Municipal Water Finance Authority, Buffalo Municipal Water Finance Authority, Westchester County Health Care Association, Nassau County Health Care Corp., Clifton-Fine Health Care Corp., Erie County Medical Center Corp., NYC Solid Waste Management Facilities, and the Dormitory Authority.

Contractors must pay subcontractors within a 7 days period.

(07.19)

Introduction to the Prevailing Rate Schedule

Information About Prevailing Rate Schedule

This information is provided to assist you in the interpretation of particular requirements for each classification of worker contained in the attached Schedule of Prevailing Rates.

Classification

It is the duty of the Commissioner of Labor to make the proper classification of workers taking into account whether the work is heavy and highway, building, sewer and water, tunnel work, or residential, and to make a determination of wages and supplements to be paid or provided. It is the responsibility of the public work contractor to use the proper rate. If there is a question on the proper classification to be used, please call the district office located nearest the project. District office locations and phone numbers are listed below.

Prevailing Wage Schedules are issued separately for "General Construction Projects" and "Residential Construction Projects" on a county-by-county basis.

General Construction Rates apply to projects such as: Buildings, Heavy & Highway, and Tunnel and Water & Sewer rates.

Residential Construction Rates generally apply to construction, reconstruction, repair, alteration, or demolition of one family, two family, row housing, or rental type units intended for residential use.

Some rates listed in the Residential Construction Rate Schedule have a very limited applicability listed along with the rate. Rates for occupations or locations not shown on the residential schedule must be obtained from the General Construction Rate Schedule. Please contact the local Bureau of Public Work office before using Residential Rate Schedules, to ensure that the project meets the required criteria.

Payrolls and Payroll Records

Contractors and subcontractors are required to establish, maintain, and preserve for not less that six (6) years, contemporaneous, true, and accurate payroll records.

Every contractor and subcontractor shall submit to the Department of Jurisdiction (Contracting Agency), within thirty (30) days after issuance of its first payroll and every thirty (30) days thereafter, a transcript of the original payrolls, subscribed and affirmed as true under penalty of perjury.

Paid Holidays

Paid Holidays are days for which an eligible employee receives a regular day's pay, but is not required to perform work. If an employee works on a day listed as a paid holiday, this remuneration is in addition to payment of the required prevailing rate for the work actually performed.

Overtime

At a minimum, all work performed on a public work project in excess of eight hours in any one day or more than five days in any workweek is overtime. However, the specific overtime requirements for each trade or occupation on a public work project may differ. Specific overtime requirements for each trade or occupation are contained in the prevailing rate schedules.

Overtime holiday pay is the premium pay that is required for work performed on specified holidays. It is only required where the employee actually performs work on such holidays.

The applicable holidays are listed under HOLIDAYS: OVERTIME. The required rate of pay for these covered holidays can be found in the OVERTIME PAY section listings for each classification.

Supplemental Benefits

Particular attention should be given to the supplemental benefit requirements. Although in most cases the payment or provision of supplements is straight time for all hours worked, some classifications require the payment or provision of supplements, or a portion of the supplements, to be paid or provided at a premium rate for premium hours worked. Supplements may also be required to be paid or provided on paid holidays, regardless of whether the day is worked. The Overtime Codes and Notes listed on the particular wage classification will indicate these conditions as required.

Effective Dates

When you review the schedule for a particular occupation, your attention should be directed to the dates above the column of rates. These are the dates for which a given set of rates is effective. The rate listed is valid until the next effective rate change or until the new annual determination which takes effect on July 1 of each year. All contractors and subcontractors are required to pay the current prevailing rates of wages and supplements. If you have any questions please contact the Bureau of Public Work or visit the New York State Department of Labor website (www.labor.ny.gov) for current wage rate information.

Apprentice Training Ratios

The following are the allowable ratios of registered Apprentices to Journey-workers.

For example, the ratio 1:1,1:3 indicates the allowable initial ratio is one Apprentice to one Journeyworker. The Journeyworker must be in place on the project before an Apprentice is allowed. Then three additional Journeyworkers are needed before a second Apprentice is allowed. The last ratio repeats indefinitely. Therefore, three more Journeyworkers must be present before a third Apprentice can be hired, and so on.

Please call Apprentice Training Central Office at (518) 457-6820 if you have any questions.

Title (Trade)	Ratio
Boilermaker (Construction)	1:1,1:4
Boilermaker (Shop)	1:1,1:3
Carpenter (Bldg.,H&H, Pile Driver/Dockbuilder)	1:1,1:4
Carpenter (Residential)	1:1,1:3
Electrical (Outside) Lineman	1:1,1:2
Electrician (Inside)	1:1,1:3
Elevator/Escalator Construction & Modernizer	1:1,1:2
Glazier	1:1,1:3
Insulation & Asbestos Worker	1:1,1:3
Iron Worker	1:1,1:4
Laborer	1:1,1:3
Mason	1:1,1:4
Millwright	1:1,1:4
Op Engineer	1:1,1:5
Painter	1:1,1:3
Plumber & Steamfitter	1:1,1:3
Roofer	1:1,1:2
Sheet Metal Worker	1:1,1:3
Sprinkler Fitter	1:1,1:2

If you have any questions concerning the attached schedule or would like additional information, please contact the nearest BUREAU of PUBLIC WORK District Office or write to:

New York State Department of Labor
Bureau of Public Work
State Office Campus, Bldg. 12
Albany, NY 12226

District Office Locations:	Telephone #	FAX #
Bureau of Public Work - Albany	518-457-2744	518-485-0240
Bureau of Public Work - Binghamton	607-721-8005	607-721-8004
Bureau of Public Work - Buffalo	716-847-7159	716-847-7650
Bureau of Public Work - Garden City	516-228-3915	516-794-3518
Bureau of Public Work - Newburgh	845-568-5287	845-568-5332
Bureau of Public Work - New York City	212-932-2419	212-775-3579
Bureau of Public Work - Patchogue	631-687-4882	631-687-4902
Bureau of Public Work - Rochester	585-258-4505	585-258-4708
Bureau of Public Work - Syracuse	315-428-4056	315-428-4671
Bureau of Public Work - Utica	315-793-2314	315-793-2514
Bureau of Public Work - White Plains	914-997-9507	914-997-9523
Bureau of Public Work - Central Office	518-457-5589	518-485-1870

Orange County General Construction

Boilermaker — 04/01/2025

JOB DESCRIPTION Boilermaker **DISTRICT** 4

ENTIRE COUNTIES
Bronx, Dutchess, Kings, Nassau, New York, Orange, Putnam, Queens, Richmond, Rockland, Suffolk, Sullivan, Ulster, Westchester

WAGES

Per Hour:	07/01/2024	01/01/2025
Boilermaker	$ 67.38	$ 68.88
Repairs & Renovations	67.38	68.88

Repairs & Renovation: Includes Repairing, Renovating replacement of parts to an existing unit(s).

SUPPLEMENTAL BENEFITS
Per Hour:

Boilermaker Repair & Renovations	33.5% of hourly Wage Paid + $ 26.85	33.5% of Hourly Wage Paid + $26.85

NOTE: "Hourly Wage Paid" shall include any and all premium(s) pay.

Repairs & Renovation Includes replacement of parts and repairs & renovation of existing unit.

OVERTIME PAY
See (*B, O, **U) on OVERTIME PAGE
Note:* Includes 9th & 10th hours, double for 11th or more.
** Labor Day ONLY, if worked.

Repairs & Renovation see (B,E,Q) on OT Page

HOLIDAY
Paid: See (1) on HOLIDAY PAGE
Overtime: See (5, 6, 11, 12, 15, 25, 26, 29) on HOLIDAY PAGE

REGISTERED APPRENTICES
Wage per hour:
(1/2) Year Terms at the following percentage of Boilermaker's Wage

1st	2nd	3rd	4th	5th	6th	7th
65%	70%	75%	80%	85%	90%	95%

Supplemental Benefits Per Hour:

	33.5% of Hourly Wage Paid Plus Amount Below	33.5% of Hourly Wage Paid Plus Amount Below
1st Term	$ 20.36	$ 20.36
2nd Term	21.28	21.28
3rd Term	22.22	22.22
4th Term	23.12	23.12
5th Term	24.07	24.07
6th Term	25.00	25.00
7th Term	25.93	25.93

NOTE: "Hourly Wage Paid" shall include any and all premium(s)

4-5

Carpenter — 04/01/2025

JOB DESCRIPTION Carpenter **DISTRICT** 8

ENTIRE COUNTIES
Dutchess, Orange

WAGES
Per hour: 07/01/2024

Building:
Millwright $ 46.35
+ 8.44*

*This portion of the benefit is NOT subject to the SAME PREMIUM as shown for overtime.

SUPPLEMENTAL BENEFITS
Per hour:

Journeyman $ 34.94

OVERTIME PAY
See (B, E, E2, Q) on OVERTIME PAGE

HOLIDAY
Paid: See (18, 19) on HOLIDAY PAGE
Paid: See (5,6,11,13,16,18,19,25) for 1st & 2nd yr. Apprentices
Overtime: See (5,6,11,13,16,18,19,25) on HOLIDAY PAGE.

REGISTERED APPRENTICES
Wages per hour:
One (1) year terms:

1st	2nd	3rd	4th
$ 28.18	$ 30.51	$ 34.84	$ 43.50
+ 4.40*	+ 5.19*	+ 5.94*	+ 7.44*

*This portion of the benefit is NOT subject to the SAME PREMIUM as shown for overtime.

Supplemental benefits per hour:

1st	2nd	3rd	4th
$ 23.00	$ 24.79	$ 26.90	$ 29.63

Carpenter 04/01/2025

JOB DESCRIPTION Carpenter **DISTRICT** 8

ENTIRE COUNTIES
Dutchess

PARTIAL COUNTIES
Orange: : The territory west demarcated by a line drawn from the Bear Mountain Bridge continuing east to the Bear Mountain Circle. The territory south demarcated by a line continuing north on 9W to the town of Cornwall where County Road 107 (also known as Quaker Rd) crosses under 9W to the centerline of Route 32, The territories south and east heading north on Route 32 to Orrs Mills Rd, then west on Orrs Mills Rd to Route 94, continue west and south on Route 94 to the Town of Chester, to the intersection of Kings Highway, continue south on Kings Highway to Bellvale Rd, west on Bellvale Rd to Bellvale Lakes Rd, then south on Bellvale Lakes Rd to Kain Rd, southeast on Kain Rd to Route 17A, then north and southeast along Route 17A to Route 210, then follow Route 210 to NJ Border.

WAGES
Per hour: 07/01/2024

Carpet/Resilient
Floor Coverer $ 34.45
+ 3.25*

*This portion of the benefit is NOT subject to the SAME PREMIUM as shown for overtime.

INCLUDES HANDLING & INSTALLATION OF ARTIFICIAL TURF AND SIMILAR TURF INDOORS/OUTDOORS.

SUPPLEMENTAL BENEFITS
Per hour:
$ 28.33

OVERTIME PAY
See (B, E, Q) on OVERTIME PAGE

HOLIDAY
Paid: See (18, 19) on HOLIDAY PAGE
Paid for 1st & 2nd yr.
Apprentices: See (5, 6, 11, 13, 16, 18, 19, 25)
Overtime: See (5, 6, 11, 13, 16, 18, 19, 25) on HOLIDAY PAGE.

REGISTERED APPRENTICES
Wage per hour - (1) year terms:

1st	2nd	3rd	4th
$15.75	$18.87	$23.55	$28.23
+ 2.48*	+ 2.48*	+ 2.48*	+ 2.48*

*This portion of the benefit is NOT subject to the SAME PREMIUM as shown for overtime.

Supplemental Benefits per hour - All apprentice terms:

$ 20.87

8-2287D&O

Carpenter — 04/01/2025

JOB DESCRIPTION Carpenter **DISTRICT** 8

ENTIRE COUNTIES
Bronx, Dutchess, Kings, Nassau, New York, Orange, Putnam, Queens, Richmond, Rockland, Suffolk, Westchester

WAGES
Per Hour: 07/01/2024

Marine Construction:

Marine Diver $ 75.46
+ 10.00*

Marine Tender $ 55.00
+ 10.00*

*This portion of the benefit is NOT subject to the SAME PREMIUM as shown for overtime

SUPPLEMENTAL BENEFITS
Per Hour:

Journeyworker $ 45.65

OVERTIME PAY
See (B, E, E2, Q) on OVERTIME PAGE

HOLIDAY
Paid: See (18, 19) on HOLIDAY PAGE
Overtime: See (5, 6, 11, 13, 16, 18, 19, 25) on HOLIDAY PAGE

REGISTERED APPRENTICES
Wages per hour:
One (1) year terms.

1st year $ 26.98
+ 5.50*
2nd year 32.58
+ 5.50*
3rd year 40.96
+ 5.50*
4th year 49.35
+ 5.50*

*This portion of the benefit is NOT subject to the SAME PREMIUM as shown for overtime.

Supplemental Benefits
Per Hour:

All terms $ 32.20

8-1456MC

Carpenter — 04/01/2025

JOB DESCRIPTION Carpenter **DISTRICT** 8

ENTIRE COUNTIES
Bronx, Kings, Nassau, New York, Queens, Richmond, Rockland, Westchester

PARTIAL COUNTIES
Orange: South of but including the following, Waterloo Mills, Slate Hill, New Hampton, Goshen, Blooming Grove, Mountainville, east to the Hudson River.
Putnam: South of but including the following, Cold Spring, TompkinsCorner, Mahopac, Croton Falls, east to Connecticut border.
Suffolk: West of Port Jefferson and Patchogue Road to Route 112 to the Atlantic Ocean.

WAGES

Per hour:	07/01/2024
Core Drilling:	
Driller	$ 46.25 + 3.25*
Driller Helper	$ 36.28 + 3.25*

Note: Hazardous Waste Pay Differential:
For Level C, an additional 15% above wage rate per hour
For Level B, an additional 15% above wage rate per hour
For Level A, an additional 15% above wage rate per hour
Note: When required to work on water: an additional $ 3.00 per hour.

*This portion of the benefit is NOT subject to the SAME PREMIUM as shown for overtime.

SUPPLEMENTAL BENEFITS

Per hour:	
Driller and Helper	$ 30.24

OVERTIME PAY
See (B, G, P) on OVERTIME PAGE

HOLIDAY
Paid: See (5, 6) on HOLIDAY PAGE
Overtime: See (5, 6) on HOLIDAY PAGE

8-1536-CoreDriller

Carpenter - Building / Heavy&Highway — 04/01/2025

JOB DESCRIPTION Carpenter - Building / Heavy&Highway **DISTRICT** 2

ENTIRE COUNTIES
Albany, Allegany, Broome, Cattaraugus, Cayuga, Chautauqua, Chemung, Chenango, Clinton, Columbia, Cortland, Delaware, Erie, Essex, Franklin, Fulton, Genesee, Greene, Hamilton, Herkimer, Jefferson, Lewis, Livingston, Madison, Monroe, Montgomery, Niagara, Oneida, Onondaga, Ontario, Orleans, Oswego, Otsego, Rensselaer, Saratoga, Schenectady, Schoharie, Schuyler, Seneca, St. Lawrence, Steuben, Sullivan, Tioga, Tompkins, Ulster, Warren, Washington, Wayne, Wyoming, Yates

PARTIAL COUNTIES
Orange: The area lying on Northern side of Orange County demarcated by a line drawn from the Bear Mountain Bridge continuing west to the Bear Mountain Circle, continue North on 9W to the town of Cornwall where County Road 107 (also known as Quaker Rd) crosses under 9W, then east on County Road 107 to Route 32, then north on Route 32 to Orrs Mills Rd, then west on Orrs Mills Rd to Route 94, continue west and south on Route 94 to the Town of Chester, to the intersection of Kings Highway, continue south on Kings Highway to Bellvale Rd, west on Bellvale Rd to Bellvale Lakes Rd, then south on Bellvale Lakes Rd to Kain Rd, southeast on Kain Rd to Route 17A, then north and southeast along Route 17A to Route 210, then follow Route 210 to NJ Border.

WAGES

Wages per hour:	07/01/2024
Carpenter - ONLY for Artificial Turf/Synthetic Sport Surface	$ 36.48

Note - Does not include the operation of equipment. Please see Operating Engineers rates.

SUPPLEMENTAL BENEFITS

Per hour:	
Journeyworker	$ 26.55

OVERTIME PAY
See (B, E, Q, X) on OVERTIME PAGE

HOLIDAY
Paid: See (5) on HOLIDAY PAGE
Overtime: See (5, 6, 16) on HOLIDAY PAGE

Notes:
When a holiday falls upon a Saturday, it shall be observed on the preceding Friday. Whan a holiday falls upon a Sunday, it shall be observed on the following Monday.
An employee taking an unexcused day off the regularly scheduled day before or after a paid Holiday shall not receive Holiday pay.

REGISTERED APPRENTICES
Wages per hour (1300 hour terms at the following percentage of Journeyworker's wage):

1st	2nd	3rd	4th
65%	70%	75%	80%

Supplemental Benefits per hour:

$18.58	$19.14	$21.24	$21.79

2-42AtSS

Carpenter - Building / Heavy&Highway — 04/01/2025

JOB DESCRIPTION Carpenter - Building / Heavy&Highway **DISTRICT** 11

ENTIRE COUNTIES
Columbia, Dutchess, Orange, Sullivan, Ulster

WAGES
WAGES (per hour)

Applies to Carpenter (Building/Heavy & Highway/Tunnel), Dockbuilder, Piledriver, Dive Tender, and Diver (Dry):

	07/01/2024	07/01/2025 Additional	07/01/2026 Additional
Base Wage	$ 37.19 + 6.31*	$ 2.23**	$ 2.30**

Applies to Diver (Wet):

Base Wage	$ 50.00 + 6.31*

*For all hours paid straight or premium.
**To be allocated at a later date.

SHIFT WORK
SHIFT DIFFERENTIAL: When mandated by a Government Agency irregular or off shift can be worked. The Carpenter shall receive an additional fifteen percent (15%) of the base wage.

SUPPLEMENTAL BENEFITS
Per hour:

Journeyworker	$ 30.65

OVERTIME PAY
See (B, E, Q) on OVERTIME PAGE

HOLIDAY
BUILDING:
Paid: See (1) on HOLIDAY PAGE.
Overtime: See (5, 6, 16, 25) on HOLIDAY PAGE.
- Holidays that fall on Sunday will be observed Monday.

HEAVY&HIGHWAY/TUNNEL:
Paid: See (5, 6, 25) on HOLIDAY PAGE
Overtime: See (5, 6) on HOLIDAY PAGE
- Holidays that fall on Sunday will be observed Monday
- Must be employed during the five (5) work days immediately preceding a holiday or during the five (5) work days following the paid holiday to receive holiday pay
- If Employee is entitled to a paid holiday, the Employee is paid the Holiday wage and supplemental benefits whether they work or not. If Employee works the Holiday, the Employee will receive holiday pay (including supplemental benefits), plus the applicable premium wage for working the Holiday. If Employee works in excess of 8 hours on Holiday, then benefits will be paid for any hours in excess of 8 hours.

REGISTERED APPRENTICES
1 Year terms at the following wage rates.

1st	2nd	3rd	4th
$ 18.60 +3.09*	$ 22.31 +3.09*	$ 26.03 +3.09*	$ 29.75 +3.09*

*For all hours paid straight or premium

SUPPLEMENTAL BENEFITS per hour:

All Terms $ 16.30

11-279.2B/H&H

Carpenter - Floor Coverer 04/01/2025

JOB DESCRIPTION Carpenter - Floor Coverer **DISTRICT** 11

ENTIRE COUNTIES
Columbia, Sullivan, Ulster

PARTIAL COUNTIES
Orange: The area lying on Northern side of Orange County demarcated by a line drawn from the Bear Mountain Bridge continuing west to the Bear Mountain Circle, continue North on 9W to the town of Cornwall where County Road 107 (also known as Quaker Rd) crosses under 9W, then east on County Road 107 to Route 32, then north on Route 32 to Orrs Mills Rd, then west on Orrs Mills Rd to Route 94, continue west and south on Route 94 to the Town of Chester, to the intersection of Kings Highway, continue south on Kings Highway to Bellvale Rd, west on Bellvale Rd to Bellvale Lakes Rd, then south on Bellvale Lakes Rd to Kain Rd, southeast on Kain Rd to Route 17A, then north and southeast along Route 17A to Route 210, then follow Route 210 to NJ Border.

WAGES
WAGES:(per hour)

	07/01/2024	07/01/2025 Additional
Carpet/Resilient Floor Coverer	$ 37.19 +6.31*	$ 2.23**

* For all hours paid straight or premium
** To be allocated at a later date.

SHIFT WORK
SHIFT DIFFERENTIAL: When mandated by a Government Agency irregular or off shift can be worked. The Carpenter shall receive an additional fifteen (15) percent of wage plus applicable benefits.

SUPPLEMENTAL BENEFITS
Per hour:

Journey worker $ 30.65

OVERTIME PAY
See (B, E, Q) on OVERTIME PAGE

HOLIDAY
BUILDING:
Paid: See (1) on HOLIDAY PAGE.
Overtime: See (5, 6, 16, 25) on HOLIDAY PAGE.
- Holidays that fall on Sunday will be observed Monday.

HEAVY&HIGHWAY/TUNNEL:
Paid: See (5, 6, 25) on HOLIDAY PAGE
Overtime: See (5, 6) on HOLIDAY PAGE
- Holidays that fall on Sunday will be observed Monday
- Must be employed during the five (5) work days immediately preceding a holiday or during the five (5) work days following the paid holiday to receive holiday pay
- If Employee is entitled to a paid holiday, the Employee is paid the Holiday wage and supplemental benefits whether they work or not. If Employee works the Holiday, the Employee will receive holiday pay (including supplemental benefits), plus the applicable premium wage for working the Holiday. If Employee works in excess of 8 hours on Holiday, then benefits will be paid for any hours in excess of 8 hours.

REGISTERED APPRENTICES
1 Year terms at the following wage rates.

1st	2nd	3rd	4th
$ 18.60 +3.09*	$ 22.31 +3.09*	$ 26.03 +3.09*	$ 29.75 +3.09*

*For all hours paid straight or premium

SUPPLEMENTAL BENEFITS per hour:

All terms $ 16.30

11-279.2Floor

Electrician 04/01/2025

JOB DESCRIPTION Electrician **DISTRICT** 11

ENTIRE COUNTIES
Orange, Putnam, Rockland

PARTIAL COUNTIES
Dutchess: Towns of Fishkill, East Fishkill, and Beacon.

WAGES
Per hour:

	07/01/2024	04/01/2025
Electrician Wireman/Technician	$ 50.50	$ 51.50
	+ 9.50*	+ 10.00*

*For all hours paid straight or premium, not to be included in 3% calculation for supplemental benefits.

NOTE ADDITIONAL AMOUNTS PAID FOR THE FOLLOWING WORK LISTED BELOW (subject to overtime premiums):
- On jobs where employees are required to work from boatswain chairs, swinging scaffolds, etc., forty (40) feet or more above the ground, or under compressed air, using Scottair packs, or gas masks, they shall receive an additional $2.00 per hour above the regular straight time rate.
- Journeyman Wireman working in Shafts, Tunnels or on Barges: $5.00 above the Journeyman Wireman rate of pay
- Journeyman Wireman when performing welding or cable splicing: $3.00 above the Journeyman Wireman rate of pay
- Journeyman Wireman required to have a NYS Asbestos Certificate: $3.00 above the Journeyman Wireman rate of pay
- Journeyman Wireman required to have a CDL: $3.00 above the Journeyman Wireman rate of pay.

SHIFT WORK
SHIFT DIFFERENTIAL: On Public Work in New York State when shift work is mandated either in the job specifications or by the contracting agency, the following rates apply when shift is worked:

Between 4:30pm & 12:30am	$ 59.30	$ 60.43
	+ 9.50*	+ 10.00*
Between 12:30am & 8:30am	$ 66.35	$ 67.69
	+ 9.50*	+ 10.00*

SUPPLEMENTAL BENEFITS

Per hour:	07/01/2024	04/01/2025
Journeyman	$ 29.68 plus 3% of straight or premium wage	$ 30.69 plus 3% of straight or premium wage

OVERTIME PAY
See (B, E, Q) on OVERTIME PAGE

HOLIDAY
Paid: See (1) on HOLIDAY PAGE
Overtime: See (5, 6, 13, 15, 16, 25) on HOLIDAY PAGE
When the holiday falls on a Saturday it is observed the Friday before. When the holiday falls on a Sunday it is observed on the Monday after.

REGISTERED APPRENTICES
WAGES:
(1)year terms at the following rates

07/01/2024	1st	2nd	3rd	4th	5th	6th
1st Shift	$ 16.01	$ 19.40	$ 24.25	$ 29.10	$ 33.95	$ 36.38
	+1.00*	+1.00*	+1.50*	+2.00*	+2.50*	+2.50*
2nd Shift	18.78	22.76	28.45	34.13	39.82	42.67
	+1.00*	+1.00*	+1.50*	+2.00*	+2.50*	+2.50*
3rd Shift	21.04	25.49	31.86	38.24	44.61	47.80
	+1.00*	+1.00*	+1.50*	+2.00*	+2.50*	+2.50*

09/01/2024	1st	2nd	3rd	4th	5th	6th
1st Shift	$ 16.01	$ 19.40	$ 24.25	$ 29.10	$ 33.95	$ 36.38
	+1.00*	+1.00*	+1.00*	+2.00*	+2.50*	+2.50*
2nd Shift	18.78	22.76	28.45	34.13	39.82	42.67
	+1.00*	+1.00*	+1.00*	+2.00*	+2.50*	+2.50*
3rd Shift	21.04	25.49	31.86	38.24	44.61	47.80
	+1.00*	+1.00*	+1.00*	+2.00*	+2.50*	+2.50*

04/01/2025	1st	2nd	3rd	4th	5th	6th
1st Shift	$ 17.00	$ 20.60	$ 25.75	$ 33.48	$ 36.05	$ 38.63
	+1.00*	+1.00*	+1.00*	+2.00*	+2.50*	+2.50*
2nd Shift	19.94	24.17	30.22	39.28	42.30	45.32
	+1.00*	+1.00*	+1.00*	+2.00*	+2.50*	+2.50*

3rd Shift	22.34 +1.00*	27.08 +1.00*	33.85 +1.00*	44.00 +2.00*	47.38 +2.50*	50.77 +2.50*

*For all hours paid straight or premium, not to be included in 3% calculation for supplemental benefits.

SUPPLEMENTAL BENEFITS per hour:

07/01/2024

1st term	$ 16.28 plus 3% of straight or premium wage
2nd term	$ 16.28 plus 3% of straight or premium wage
3rd term	$ 18.28 plus 3% of straight or premium wage
4th term	$ 18.78 plus 3% of straight or premium wage
5th term	$ 20.28 plus 3% of straight or premium wage
6th term	$ 20.28 plus 3% of straight or premium wage

09/01/2024

1st term	$ 16.28 plus 3% of straight or premium wage
2nd term	$ 17.78 plus 3% of straight or premium wage
3rd term	$ 18.78 plus 3% of straight or premium wage
4th term	$ 19.78 plus 3% of straight or premium wage
5th term	$ 21.28 plus 3% of straight or premium wage
6th term	$ 21.28 plus 3% of straight or premium wage

11-363/1

Elevator Constructor — 04/01/2025

JOB DESCRIPTION Elevator Constructor **DISTRICT** 1

ENTIRE COUNTIES
Columbia, Dutchess, Greene, Orange, Putnam, Sullivan, Ulster

PARTIAL COUNTIES
Delaware: Towns of Andes, Bovina, Colchester, Davenport, Delhi, Harpersfield, Hemdon, Kortright, Meredith, Middletown, Roxbury, Hancock & Stamford
Rockland: Only the Township of Stony Point.
Westchester: Only the Townships of Bedford, Lewisboro, Cortland, Mt. Kisco, North Salem, Pound Ridge, Somers and Yorktown.

WAGES

Per Hour	07/01/2024	01/01/2025
Mechanic	$ 70.15	$ 73.07
Helper	70% of Mechanic Wage Rate	70% of Mechanic Wage Rate

SUPPLEMENTAL BENEFITS
Per hour

	07/01/2024	01/01/2025
Journeyworker/Helper	$ 37.885*	$ 38.435*

(*)Plus 6% of regular hourly if less than 5 years of service. Plus 8% of regular hourly rate if more than 5 years of service.

OVERTIME PAY
See (D, O) on OVERTIME PAGE

HOLIDAY
Paid: See (5, 6, 15, 16) on HOLIDAY PAGE
Overtime: See (5, 6, 15, 16) on HOLIDAY PAGE
Note: When a paid holiday falls on Saturday, it shall be observed on Friday. When a paid holiday falls on Sunday, it shall be observed on Monday.

REGISTERED APPRENTICES
Wages per hour:

0-6 mo*	6-12 mo	2nd yr	3rd yr	4th yr
50 %	55 %	65 %	70 %	80 %

(*)Plus 6% of the hourly rate, no additional supplemental benefits.

Supplemental Benefits per hour worked:

Same as Journeyperson/Helper

1-138

Glazier 04/01/2025

JOB DESCRIPTION Glazier **DISTRICT** 8

ENTIRE COUNTIES
Bronx, Dutchess, Kings, Nassau, New York, Orange, Putnam, Queens, Richmond, Rockland, Suffolk, Sullivan, Ulster, Westchester

WAGES
Per hour:

	07/01/2024	05/01/2025 Additional
Glazier, Glass Tinting and Window Film	$ 63.28	$ 1.11***
Scaffolding, including swing scaffold	67.28	
*Mechanical Equipment	64.28	
**Repair & Maintenance	30.76	

*Mechanical equipment, scissor jacks, man lifts, booms & buckets 30' or more, but not pipe scaffolding.
**Repair & Maintenance- All repair & maintenance work on a particular building whenever performed, where the total cumulative Repair & Maintenance contract value is under $193,000.

***To be allocated at a later date.

SUPPLEMENTAL BENEFITS
Per hour:

	7/01/2024
Glazier, Glass Tinting Window Film, Scaffolding and Mechanical Equipment	$ 42.13
Repair & Maintenance	24.62

OVERTIME PAY
See (B, E, Q, V) on OVERTIME PAGE
For 'Repair & Maintenance' see (B, B2, I, S) on overtime page.

HOLIDAY
Paid: See (5, 6, 16, 25) on HOLIDAY PAGE
Overtime: See (5, 6, 16, 25) on HOLIDAY PAGE
For 'Repair & Maintenance'
Paid: See(5, 6, 16, 25)
Overtime: See(5, 6, 16, 25)

REGISTERED APPRENTICES
Wage per hour:
(1) year terms at the following wage rates:

	7/01/2024
1st term	$ 22.34
2nd term	30.64
3rd term	40.87
4th term	50.14

Supplemental Benefits:
(Per hour)

1st term	$ 19.27
2nd term	27.34
3rd term	32.85
4th term	36.01

8-1087 (DC9 NYC)

Insulator - Heat & Frost 04/01/2025

JOB DESCRIPTION Insulator - Heat & Frost **DISTRICT** 8

ENTIRE COUNTIES
Dutchess, Orange, Putnam, Rockland, Westchester

WAGES
Per hour: 07/01/2024

Insulator	$ 60.85
Discomfort & Additional Training**	63.92
Fire Stop Work*	32.97

* Applies on all exclusive Fire Stop Work (When contract is for Fire Stop work only). No apprentices on these contracts only.

**Applies to work requiring; garb or equipment worn against the body not customarily worn by insulators; psychological evaluation ;special training, including but not limited to "Yellow Badge" radiation training

Note: Additional $0.50 per hour for work 30 feet or more above floor or ground level.

SUPPLEMENTAL BENEFITS
Per hour:

Journeyworker	$ 38.25
Discomfort & Additional Training	40.32
Fire Stop Work:	
Journeyworker	19.48

OVERTIME PAY
See (B, E, E2, Q, *T) on OVERTIME PAGE

HOLIDAY
Paid: See (1) on HOLIDAY PAGE
Note: Last working day preceding Christmas and New Years day, workers shall work no later than 12:00 noon and shall receive 8 hrs pay.

Overtime: See (2*, 4, 6, 16, 25) on HOLIDAY PAGE.
*Note: Labor Day triple time if worked.

REGISTERED APPRENTICES
(1) year terms:

Insulator Apprentices:

1st	2nd	3rd	4th
$ 32.97	$ 38.54	$ 44.12	$ 49.70

Discomfort & Additional Training Apprentices:

1st	2nd	3rd	4th
$ 34.51	$ 40.38	$ 46.27	$ 52.16

Supplemental Benefits paid per hour:

Insulator Apprentices:

1st term	$ 19.48
2nd term	23.23
3rd term	26.98
4th term	30.74

Discomfort & Additional Training Apprentices:

1st term	$ 20.50
2nd term	24.47
3rd term	28.43
4th term	32.39

8-91

Ironworker 04/01/2025

JOB DESCRIPTION Ironworker **DISTRICT** 11

ENTIRE COUNTIES
Dutchess, Orange, Putnam, Rockland, Sullivan, Ulster

WAGES
Per hour:

	07/01/2024	07/01/2025 Additional	07/01/2026 Additional
Structural	$ 51.38	$ 2.00*	$2.00*

Reinforcing	51.38	2.00*	2.00*
Ornamental	51.38	2.00*	2.00*
Chain Link Fence	51.38	2.00*	2.00*

* To be allocated at a later date.

NOTE: For Reinforcing classification ONLY, Ironworker 4-46Reinf rates apply in Rockland County's southern section (south of Convent Road and east of Blue Hills Road).

SHIFT WORK
On Government Mandated Irregular Workdays or Shift Work, the following wage will be paid:

1st Shift	$ 51.38
2nd Shift	66.39
3rd Shift	71.39

Note- Any shift that works past 12:00 midnight shall receive the 3rd shift differential.

SUPPLEMENTAL BENEFITS
Per hour:

Journeyman	$ 45.56

OVERTIME PAY
See (B1, Q, V) on OVERTIME PAGE

HOLIDAY
Paid: See (1) on HOLIDAY PAGE
Overtime: See (5, 6, 16) on HOLIDAY PAGE
If a holiday falls on Saturday, it will be observed Friday. If a holiday falls on Sunday, it will be observed Monday.

REGISTERED APPRENTICES
Wages:

(1) year terms at the following wage:

	1st yr	2nd yr	3rd yr	4th yr
1st Shift	$ 25.69	$ 30.83	$ 35.97	$ 41.10
2nd Shift	36.15	42.20	48.25	54.29
3rd Shift	39.64	45.99	52.35	58.69

Supplemental Benefits per hour:

	07/01/2024
1st year	$ 40.94
2nd year	41.86
3rd year	42.79
4th year	43.71

11-417

Laborer - Building — 04/01/2025

JOB DESCRIPTION Laborer - Building **DISTRICT** 11

ENTIRE COUNTIES
Orange, Sullivan, Ulster

PARTIAL COUNTIES
Delaware: Only the Townships of Andes, Bovina, Davenport, Delhi, Franklin, Hamden, Harpersfield, Kortright, Meredith, Middletown, Roxbury, and Stamford.
Greene: Only the Township of Catskill.

WAGES
Class 1: Custodial and janitorial work, general cleanup, and flag person.

Class 2: Concrete laborer, mason tending, hod carrier, signal person, pressure blasting and washing, chainsaw, demo saw, jackhammers, general labor.

Class 3: Jumping jack, air track drills, grading, explosive handler and blaster, grade checker. When OSHA requires negative pressure respirator.

Class 4: Environmental work including but not limited to asbestos abatement, toxic and hazardous abatement, lead abatement work, mold remediation and biohazards.

WAGES: (per hour)	07/01/2024	06/01/2025 Additional	06/01/2026 Additional
Class 1	$ 43.15	$ 2.69*	$ 2.79*
Class 2	43.95	2.72*	2.82*

Class 3	45.90	2.79*	2.89*
Class 4	49.00	2.90*	3.00*

*To be allocated at a later date.

These rates will cover all work within five feet of the building foundation line.

SHIFT WORK
Shift Differential: On all Governmental mandated irregular or off shift work, an additional 25% of wage is required. The 25% shift differential will be paid on public works contract for shifts or irregular workdays outside the normal working hours for 2nd and 3rd shifts or irregular workday or when mandated or required by state, federal, county, local or other governmental agency contracts.

SUPPLEMENTAL BENEFITS
Per hour:

Journeyman	$ 33.50
Shift	40.84

OVERTIME PAY
See (B, *E, E5, **Q) on OVERTIME PAGE
*For first 8 hours on Saturday
**When an employee is required to work on a holiday which falls on a Sunday the employee shall be paid three (3) times the hourly rate and one (1) hour benefits for every hour worked. When an employee is required to work on a holiday which falls on a Saturday the employee shall be paid two and a half (2.5) times the hourly rate and one hour benefits for every hour worked.

HOLIDAY
Paid: See (1) on HOLIDAY PAGE
Overtime: See (5, 6, 16, 25) on HOLIDAY PAGE
Holidays that fall on Saturday shall be observed on Friday, when holidays fall on Sunday they shall be observed on Monday.

REGISTERED APPRENTICES
(1000) hour terms at the following wages.

	07/01/2024
1st term	$ 28.05
2nd term	32.35
3rd term	36.70
4th term	41.00

Supplemental Benefits per hour:

All Terms Regular	$ 29.23
All Terms Shift Rate	35.39

11-17.BA

Laborer - Heavy&Highway — 04/01/2025

JOB DESCRIPTION Laborer - Heavy&Highway **DISTRICT** 11

ENTIRE COUNTIES
Orange, Sullivan, Ulster

PARTIAL COUNTIES
Delaware: Only the Townships of Andes, Bovina, Middletown, Roxbury,Franklin, Hamden, Stamford, Delhi, Kortright, Harpersfield,Meredith, and Davenport.
Greene: Only the Township of Catskill.

WAGES
CLASS 1: Flag person, gate person.

CLASS 2: General laborer, chuck tender, nipper, powder carrier, magazine tender, concrete men, vibrator men, mason tender, mortar men, traffic control, custodial work, temporary heat, pump men, pit men, dump men, asphalt men, joint setter, signalman, pipe men, riprap, dry stone layers, jack hammer, bush hammer, pavement breaker, men on mulching & seeding machines, all seeding & sod laying, landscape work, walk behind self-propelled power saws, grinder, walk behind rollers and tampers of all types, burner men, filling and wiring of baskets for gabion walls, chain saw operator, railroad track laborers, power buggy, plaster & acoustic pump, power brush cutter, retention liners, walk behind surface planer, chipping hammer, manhole, catch basin or inlet installing, mortar mixer, laser men. *Micro paving and crack sealing.

CLASS 3: Asbestos, toxic, bioremediation and Phyto-remediation, lead or hazardous materials abatement when certification or license is required, Drilling Equipment Only Where a Separate Air Compressor Unit Supplies Power.

CLASS 4: Asphalt screed man, blaster, all laborers involved in pipejacking and boring operations not exceeding more than 10 feet into pipe, boring or drilled area.

WAGES: (per hour)	07/01/2024
Class 1	$ 42.35
Class 2	46.05

Class 3	50.75
Class 4	55.80

* When laborers are performing micro paving, crack sealing or slurry application when not part of asphalt prep operations laborers shall receive an additional $2.50 per hour over rate.

**To be allocated at a later date.

SHIFT WORK
SHIFT DIFFERENTIAL: Night work and irregular shift require 20% increase on wages for all Government mandated night and irregular shift work.

SUPPLEMENTAL BENEFITS
Per hour:

Journeyman	$ 33.38
Shift	39.18

OVERTIME PAY
See (B, E, P, *R, **S, ***T, X) on OVERTIME PAGE
*For Mon-Fri Holidays, Double Benefits to be paid for all hours worked.
**For Saturday Holidays, Two- and one-half Benefits for all hours worked.
***For Sunday Holidays, Triple Benefits for all hours worked.

HOLIDAY
Paid: See (5, 6, 15, 25) on HOLIDAY PAGE
Overtime: See (5, 6, 15, 25) on HOLIDAY PAGE
To be eligible for a paid holiday, an employee must work at least two (2) days in the calendar week or payroll week in which the holiday falls.

REGISTERED APPRENTICES
(1000) hour terms at the following wages.

	07/01/2024
1st term	$ 28.05
2nd term	32.35
3rd term	36.70
4th term	41.00

Supplemental Benefits per hour:

All Terms Regular	$ 29.23
All Terms Shift Rate	34.16

11-17.1H/H

Laborer - Tunnel — 04/01/2025

JOB DESCRIPTION Laborer - Tunnel **DISTRICT** 11

ENTIRE COUNTIES
Columbia, Dutchess, Greene, Orange, Otsego, Putnam, Rockland, Sullivan, Ulster, Westchester

PARTIAL COUNTIES
Chenango: Townships of Columbus, Sherburne and New Berlin.
Delaware: Townships of Andes, Bovina, Middletown, Roxbury, Franklin, Hamden, Stamford, Delhi, Kortright, Harpersfield, Merideth and Davenport.

WAGES
Class 1: All support laborers/sandhogs working above the shaft or tunnel.

Class 2: All laborers/sandhogs working in the shaft or tunnel.

Class 4: Safety Miners

Class 5: Site work related to Shaft/Tunnel

WAGES: (per hour)

	07/01/2024	06/01/2025
Class 1	$ 57.05	$ 58.55
Class 2	59.20	60.70
Class 4	65.60	67.10
Class 5	49.90	51.40

Toxic and hazardous waste, lead abatement and asbestos abatement work will be paid an additional $ 3.00 an hour.

SHIFT WORK
SHIFT DIFFERENTIAL...On all Government mandated irregular shift work:

- Employee shall be paid at time and one half the regular rate Monday through Friday.
- Saturday shall be paid at 1.65 times the regular rate.
- Sunday shall be paid at 2.15 times the regular rate.

SUPPLEMENTAL BENEFITS
Per hour:

Benefit 1	$ 36.98	$ 38.23
Benefit 2	55.39	59.99
Benefit 3	74.58	76.73

Benefit 1 applies to straight time hours, paid holidays not worked.
Benefit 2 applies to over 8 hours in a day (M-F), irregular shift work hours worked, and Saturday hours worked.
Benefit 3 applies to Sunday and Holiday hours worked.

OVERTIME PAY
See (B, E, Q, X) on OVERTIME PAGE

HOLIDAY
Paid: See (5, 6, 15, 25) on HOLIDAY PAGE
Overtime: See (5, 6, 15, 16, 25) on HOLIDAY PAGE
When a recognized Holidays falls on Saturday or Sunday, holidays falling on Saturday shall be recognized or observed on Friday and holidays falling on Sunday shall be recognized or observed on Monday. Employees ordered to work on the Saturday or Sunday of the holiday or on the recognized or the observed Friday or Monday for those holidays falling on Saturday or Sunday shall receive double time the established rate and benefits for the holiday.

REGISTERED APPRENTICES
FOR APPRENTICE RATES, refer to the appropriate Laborer Heavy & Highway wage rate contained in the wage schedule for the County and location where the work is to be performed.

11-17/60/235/754Tun

Lineman Electrician — 04/01/2025

JOB DESCRIPTION Lineman Electrician **DISTRICT** 6

ENTIRE COUNTIES
Albany, Allegany, Broome, Cattaraugus, Cayuga, Chautauqua, Chemung, Chenango, Clinton, Columbia, Cortland, Delaware, Dutchess, Erie, Essex, Franklin, Fulton, Genesee, Greene, Hamilton, Herkimer, Jefferson, Lewis, Livingston, Madison, Monroe, Montgomery, Niagara, Oneida, Onondaga, Ontario, Orange, Orleans, Oswego, Otsego, Putnam, Rensselaer, Rockland, Saratoga, Schenectady, Schoharie, Schuyler, Seneca, St. Lawrence, Steuben, Sullivan, Tioga, Tompkins, Ulster, Warren, Washington, Wayne, Wyoming, Yates

WAGES
A Lineman/Technician shall perform all overhead aerial work. A Lineman/Technician on the ground will install all electrical panels, connect all grounds, install and connect all electrical conductors, assembly of all electrical materials, conduit, pipe, or raceway; placing of fish wire; pulling of cables, wires or fiber optic cable through such raceways; splicing of conductors; dismantling of such structures, lines or equipment.

Crane Operators: Operation of any type of crane on line projects.
Crawler Backhoe: Operation of tracked excavator/crawler backhoe with 1/2 yard bucket or larger on line projects.
Digging Machine Operator: All other digging equipment and augering on line projects.

A Groundman/Truck Driver shall: Build and set concrete forms, handle steel mesh, set footer cages, transport concrete in a wheelbarrow, hand or machine concrete vibrator, finish concrete footers, mix mortar, grout pole bases, cover and maintain footers while curing in cold weather, operate jack hammer, operate hand pavement breaker, tamper, concrete and other motorized saws, as a drill helper, operate and maintain generators, water pumps, chainsaws, sand blasting, operate mulching and seeding machine, air tools, electric tools, gas tools, load and unload materials, hand shovel and/or broom, prepare and pour mastic and other fillers, assist digger operator/equipment operator in ground excavation and restoration, landscape work and painting. Only when assisting a lineman technician, a groundman/truck driver may assist in installing conduit, pipe, cables and equipment.

NOTE: Includes Teledata Work within ten (10) feet of High Voltage Transmission Lines. Also includes digging of holes for poles, anchors, footer, and foundations for electrical equipment.

Below rates applicable on all overhead and underground distribution and maintenance work, and all overhead and underground transmission line work and the installation of fiber optic cable where no other construction trades are or have been involved. Includes access matting for line work.

Per hour:	07/01/2024
Group A:	
Lineman, Technician	$ 58.90
Crane, Crawler Backhoe	58.90
Welder, Cable Splicer	58.90

Group B:	
Digging Mach. Operator	53.01
Tractor Trailer Driver	50.07
Groundman, Truck Driver	47.12
Equipment Mechanic	47.12
Flagman	35.34

Additional $1.00 per hour for entire crew when a helicopter is used.

Below rates applicable on all electrical sub-stations, switching structures, fiber optic cable and all other work not defined as "Utility outside electrical work." Includes access matting for line work.

Group A:	
Lineman, Technician	$ 58.90
Crane, Crawler Backhoe	58.90
Cable Splicer	64.79
Certified Welder, Pipe Type Cable	61.85

Group B:	
Digging Mach. Operator	53.01
Tractor Trailer Driver	50.07
Groundman, Truck Driver	47.12
Equipment Mechanic	47.12
Flagman	35.34

Additional $1.00 per hour for entire crew when a helicopter is used.

Below rates applicable on all switching structures, maintenance projects, railroad catenary install/maintenance third rail installation, bonding of rails and pipe type cable and installation of fiber optic cable. Includes access matting for line work.

Group A:	
Lineman, Tech, Welder	$ 60.22
Crane, Crawler Backhoe	60.22
Cable Splicer	66.24
Certified Welder, Pipe Type Cable	63.23

Group B:	
Digging Mach. Operator	54.20
Tractor Trailer Driver	51.19
Groundman, Truck Driver	48.18
Equipment Mechanic	48.18
Flagman	36.13

Additional $1.00 per hour for entire crew when a helicopter is used.

Below rates applicable on all overhead and underground transmission line work & fiber optic cable where other construction trades are or have been involved. This applies to transmission line work only, not other construction. Includes access matting for line work.

Group A:	
Lineman, Tech, Welder	$ 61.41
Crane, Crawler Backhoe	61.41

Group B:	
Digging Mach. Operator	55.27
Tractor Trailer Driver	52.20
Groundman, Truck Driver	49.13
Equipment Mechanic	49.13
Flagman	36.85

Additional $1.00 per hour for entire crew when a helicopter is used.

SHIFT WORK

THE FOLLOWING RATES WILL APPLY ON ALL CONTRACTING AGENCY MANDATED MULTIPLE SHIFTS OF AT LEAST FIVE (5) DAYS DURATION WORKED BETWEEN THE HOURS LISTED BELOW:

1ST SHIFT	8:00 AM to 4:30 PM	REGULAR RATE

2ND SHIFT	4:30 PM to 1:00 AM REGULAR RATE PLUS 17.3 %
3RD SHIFT	12:30 AM to 9:00 AM REGULAR RATE PLUS 31.4 %

SUPPLEMENTAL BENEFITS
Per hour:

	07/01/2024
Group A	$ 30.90 *plus 7% of the hourly wage paid
Group B	$ 26.90 *plus 7% of the hourly wage paid

*The 7% is based on the hourly wage paid, straight time or premium time.

OVERTIME PAY
See (B, E, Q, X) on OVERTIME PAGE. NOTE: Double time for all emergency work designated by the Dept. of Jurisdiction.
WAGE CAP - Double the straight time hourly base wage shall be the maximum hourly wage compensation for any hour worked. Contractor is still responsible to pay the hourly benefit amount for each hour worked.

HOLIDAY

Paid	See (5, 6, 8, 13, 25) on HOLIDAY PAGE plus Governor of NYS Election Day.
Overtime	See (5, 6, 8, 13, 25) on HOLIDAY PAGE plus Governor of NYS Election Day.

NOTE: All paid holidays falling on Saturday shall be observed on the preceding Friday. All paid holidays falling on Sunday shall be observed on the following Monday. Supplements for holidays paid at straight time.

REGISTERED APPRENTICES
WAGES per hour: 1000 hour terms at the following percentage of the applicable Journeyworker's Lineman wage.

1st	2nd	3rd	4th	5th	6th	7th
60%	65%	70%	75%	80%	85%	90%

SUPPLEMENTAL BENEFITS per hour:

07/01/2024
$ 26.90 *plus 7% of the hourly wage paid

*The 7% is based on the hourly wage paid, straight time or premium time.

6-1249a

Lineman Electrician - Teledata — 04/01/2025

JOB DESCRIPTION Lineman Electrician - Teledata **DISTRICT** 6

ENTIRE COUNTIES
Albany, Allegany, Broome, Cattaraugus, Cayuga, Chautauqua, Chemung, Chenango, Clinton, Columbia, Cortland, Delaware, Dutchess, Erie, Essex, Franklin, Fulton, Genesee, Greene, Hamilton, Herkimer, Jefferson, Lewis, Livingston, Madison, Monroe, Montgomery, Niagara, Oneida, Onondaga, Ontario, Orange, Orleans, Oswego, Otsego, Putnam, Rensselaer, Rockland, Saratoga, Schenectady, Schoharie, Schuyler, Seneca, St. Lawrence, Steuben, Sullivan, Tioga, Tompkins, Ulster, Warren, Washington, Wayne, Westchester, Wyoming, Yates

WAGES
Per hour:

For outside work, stopping at first point of attachment (demarcation).

	07/01/2024	01/01/2025
Cable Splicer	$ 39.24	$ 40.81
Installer, Repairman	$ 37.24	$ 38.73
Teledata Lineman	$ 37.24	$ 38.73
Tech., Equip. Operator	$ 37.24	$ 38.73
Groundman	$ 19.74	$ 20.53

NOTE: EXCLUDES Teledata work within ten (10) feet of High Voltage (600 volts and over) transmission lines. For this work please see LINEMAN.

SHIFT WORK
THE FOLLOWING RATES APPLY WHEN THE CONTRACTING AGENCY MANDATES MULTIPLE SHIFTS OF AT LEAST FIVE (5) DAYS DURATION ARE WORKED. WHEN TWO (2) OR THREE (3) SHIFTS ARE WORKED THE FOLLOWING RATES APPLY:

1ST SHIFT	REGULAR RATE
2ND SHIFT	REGULAR RATE PLUS 10%
3RD SHIFT	REGULAR RATE PLUS 15%

SUPPLEMENTAL BENEFITS

Per hour:	07/01/2024	01/01/2025
Journeyworker	$ 5.70 *plus 3% of the hour wage paid	$ 5.70 *plus 3% of the hour wage paid

*The 3% is based on the hourly wage paid, straight time rate or premium rate.

OVERTIME PAY
See (B, E, Q) on OVERTIME PAGE
WAGE CAP - Double the straight time hourly base wage shall be the maximum hourly wage compensation for any hour worked. Contractor is still responsible to pay the hourly benefit amount for each hour worked.

HOLIDAY
Paid: See (1) on HOLIDAY PAGE
Overtime: See (5, 6, 16) on HOLIDAY PAGE

6-1249LT - Teledata

Lineman Electrician - Traffic Signal, Lighting — 04/01/2025

JOB DESCRIPTION Lineman Electrician - Traffic Signal, Lighting **DISTRICT** 6

ENTIRE COUNTIES
Columbia, Dutchess, Orange, Putnam, Rockland, Ulster

WAGES
Lineman/Technician shall perform all overhead aerial work. A Lineman/Technician on the ground will install all electrical panels, connect all grounds, install and connect all electrical conductors which includes, but is not limited to road loop wires; conduit and plastic or other type pipes that carry conductors, flex cables and connectors, and to oversee the encasement or burial of such conduits or pipes.

Crane Operators: Operation of any type of crane on Traffic Signal/Lighting projects.
Crawler Backhoe: Operation of tracked excavator/crawler backhoe with 1/2 yard bucket or larger on Traffic Signal/Lighting projects.
Digging Machine Operator: All other digging equipment and augering on Traffic Signal/Lighting projects.

A Groundman/Truck Driver shall: Build and set concrete forms, handle steel mesh, set footer cages, transport concrete in a wheelbarrow, hand or machine concrete vibrator, finish concrete footers, mix mortar, grout pole bases, cover and maintain footers while curing in cold weather, operate jack hammer, operate hand pavement breaker, tamper, concrete and other motorized saws, as a drill helper, operate and maintain generators, water pumps, chainsaws, sand blasting, operate mulching and seeding machine, air tools, electric tools, gas tools, load and unload materials, hand shovel and/or broom, prepare and pour mastic and other fillers, assist digger operator/equipment operator in ground excavation and restoration, landscape work and painting. Only when assisting a lineman technician, a groundman/truck driver may assist in installing conduit, pipe, cables and equipment.

A flagger's duties shall consist of traffic control only.

Per hour:	07/01/2024
Group A:	
Lineman, Technician	$ 51.82
Crane, Crawler Backhoe	51.82
Certified Welder	54.41
Group B:	
Digging Machine	46.64
Tractor Trailer Driver	44.05
Groundman, Truck Driver	41.46
Equipment Mechanic	41.46
Flagman	31.09

Above rates are applicable for installation, testing, operation, maintenance and repair on all Traffic Control (Signal) and Illumination (Lighting) projects, Traffic Monitoring Systems, and Road Weather Information Systems. Includes digging of holes for poles, anchors, footer foundations for electrical equipment; assembly of all electrical materials or raceway; placing of fish wire; pulling of cables, wires or fiber optic cable through such raceways; splicing of conductors; dismantling of such structures, lines or equipment.

SHIFT WORK

THE FOLLOWING RATES WILL APPLY ON ALL CONTRACTING AGENCY MANDATED MULTIPLE SHIFTS OF AT LEAST FIVE (5) DAYS DURATION WORKED BETWEEN THE HOURS LISTED BELOW:

1ST SHIFT	8:00 AM TO 4:30 PM REGULAR RATE
2ND SHIFT	4:30 PM TO 1:00 AM REGULAR RATE PLUS 17.3%
3RD SHIFT	12:30 AM TO 9:00 AM REGULAR RATE PLUS 31.4%

SUPPLEMENTAL BENEFITS

Per hour worked:

	07/01/2024
Group A:	$ 30.90 *plus 7% of the hourly wage paid
Group B	$ 26.90 *plus 7% of the hourly wage paid

*The 7% is based on the hourly wage paid, straight time or premium time.

OVERTIME PAY

See (B, E, Q, X) on OVERTIME PAGE. NOTE: Double time for all emergency work designated by the Dept. of Jurisdiction.
WAGE CAP - Double the straight time hourly base wage shall be the maximum hourly wage compensation for any hour worked. Contractor is still responsible to pay the hourly benefit amount for each hour worked.

HOLIDAY

Paid: See (5, 6, 8, 13, 25) on HOLIDAY PAGE and Governor of NYS Election Day.
Overtime: See (5, 6, 8, 13, 25) on HOLIDAY PAGE and Governor of NYS Election Day.

NOTE: All paid holidays falling on Saturday shall be observed on the preceding Friday. All paid holidays falling on Sunday shall be observed on the following Monday. Supplements for holidays paid at straight time.

REGISTERED APPRENTICES

WAGES per hour: 1000 hour terms at the following percentage of the applicable Journeyworker's Lineman wage.

1st	2nd	3rd	4th	5th	6th	7th
60%	65%	70%	75%	80%	85%	90%

SUPPLEMENTAL BENEFITS per hour:

07/01/2024
$ 26.90 *plus 7% of the hourly wage paid

*The 7% is based on the hourly wage paid, straight time or premium time.

6-1249aReg8LT

Lineman Electrician - Tree Trimmer — 04/01/2025

JOB DESCRIPTION Lineman Electrician - Tree Trimmer **DISTRICT** 6

ENTIRE COUNTIES

Albany, Allegany, Broome, Cattaraugus, Cayuga, Chautauqua, Chemung, Chenango, Clinton, Columbia, Cortland, Delaware, Dutchess, Erie, Essex, Franklin, Fulton, Genesee, Greene, Hamilton, Herkimer, Jefferson, Lewis, Livingston, Madison, Monroe, Montgomery, Niagara, Oneida, Onondaga, Ontario, Orange, Orleans, Oswego, Otsego, Putnam, Rensselaer, Rockland, Saratoga, Schenectady, Schoharie, Schuyler, Seneca, St. Lawrence, Steuben, Sullivan, Tioga, Tompkins, Ulster, Warren, Washington, Wayne, Wyoming, Yates

WAGES

Applies to line clearance, tree work and right-of-way preparation on all new or existing energized overhead or underground electrical, telephone and CATV lines. This also includes stump removal near underground energized electrical lines including telephone and CATV lines.

Per hour:	07/01/2024
Tree Trimmer	$ 31.44
Equipment Operator	27.80
Equipment Mechanic	27.80
Truck Driver	23.15
Groundman	19.07
Flag person	15.00*

*NOTE-Rate effective on 01/01/2025 - $15.50 due to minimum wage increase.

SUPPLEMENTAL BENEFITS
Per hour:

	07/01/2024
Journeyworker	$ 10.48 *plus 4.5% of the hourly wage paid

* The 4.5% is based on the hourly wage paid, straight time rate or premium rate.

OVERTIME PAY
See (B, E, Q, X) on OVERTIME PAGE
WAGE CAP - Double the straight time hourly base wage shall be the maximum hourly wage compensation for any hour worked. Contractor is still responsible to pay the hourly benefit amount for each hour worked.

HOLIDAY
Paid: See (5, 6, 8, 15) on HOLIDAY PAGE
Overtime: See (5, 6, 8, 15, 16, 25) on HOLIDAY PAGE
NOTE: All paid holidays falling on a Saturday shall be observed on the preceding Friday. All paid holidays falling on a Sunday shall be observed on the following Monday.

6-1249TT

Mason - Building — 04/01/2025

JOB DESCRIPTION Mason - Building **DISTRICT** 11

ENTIRE COUNTIES
Dutchess, Sullivan, Ulster

PARTIAL COUNTIES
Orange: Entire county except the Township of Tuxedo.

WAGES
Per hour:

	07/01/2024
Bricklayer	$ 46.45
Cement Mason	46.45
Plasterer/Stone Mason	46.45
Pointer/Caulker	46.45

Additional $1.00 per hour for power saw work
Additional $0.50 per hour for swing scaffold or staging work

SHIFT WORK
SHIFT WORK: When shift work or an irregular workday is mandated or required by state, federal, county, local or other governmental agency contracts, the following premiums apply:
Irregular workday requires 15% premium
Second shift an additional 15% of wage plus benefits to be paid
Third shift an additional 25% of wage plus benefits to be paid

SUPPLEMENTAL BENEFITS
Per hour:

Journeyman	$ 38.00

OVERTIME PAY
Cement Mason: See (B, E, Q, W) on OVERTIME PAGE.
All Others: See (B, E, Q) on OVERTIME PAGE.

HOLIDAY
Paid: See (1) on HOLIDAY PAGE
Overtime: See (5, 6, 16, 25) on HOLIDAY PAGE
Whenever any of the above holidays fall on Sunday, they will be observed on Monday. Whenever any of the above holidays fall on Saturday, they will be observed on Friday.

REGISTERED APPRENTICES
Wages per hour:

750 hour terms at the following percentage of Journeyman's wage

1st	2nd	3rd	4th	5th	6th	7th	8th
50%	55%	60%	65%	70%	75%	80%	85%

Supplemental Benefits per hour

750 hour terms at the following percentage of journeyman supplements

1st	2nd	3rd	4th	5th	6th	7th	8th
50%	55%	60%	65%	70%	75%	80%	85%

Apprentices indentured before June 1st, 2011 receive full journeyman benefits

11-5du-b

Mason - Building — 04/01/2025

JOB DESCRIPTION Mason - Building **DISTRICT** 9

ENTIRE COUNTIES
Dutchess, Orange, Putnam, Sullivan, Ulster

WAGES
Per hour:

	07/01/2024	12/02/2024
Tile, Marble,& Terrazzo Mechanic/Setter	$ 58.06	$ 58.23

SUPPLEMENTAL BENEFITS
Per Hour:

Journeyworker:	$ 25.11*	$ 25.56*
	+6.14	+6.15

* This portion of benefits subject to same premium rate as shown for overtime wages.

OVERTIME PAY
See (B, E, Q) on OVERTIME PAGE
Double time rate applies after 10 hours

HOLIDAY
Paid: See (1) on HOLIDAY PAGE
Overtime: See (5, 6, 11, 15, 16, 25) on HOLIDAY PAGE

REGISTERED APPRENTICES
Wage per hour:
(Counties of Orange & Putnam)
750 hour terms at the following wage rate:

	1st	2nd	3rd	4th	5th	6th	7th	8th	9th	10th
	1-	751-	1501-	2251-	3001-	3751-	4501-	5251-	6001-	6751-
	750	1500	2250	3000	3750	4500	5250	6000	6750	7500
07/01/2024	$22.19	$27.21	$34.45	$39.46	$43.07	$46.58	50.23	$55.24	$57.71	$62.00
12/02/2024	$22.29	$27.35	$34.36	$39.41	$43.05	$46.60	$50.29	$55.33	$57.84	$62.20

Supplemental Benefits per hour:
(Counties of Orange & Putnam)

1st	2nd	3rd	4th	5th	6th	7th	8th	9th	10th

07/01/2024									
$12.55*	$12.55*	$15.36*	$15.36*	$16.36*	$17.86*	$18.86*	$18.86*	$18.86*	$24.11*
+ 0.76	+ 0.81	+ 0.91	+ 0.96	+ 1.43	+ 1.48	+ 1.91	+ 1.97	+ 4.57	+ 5.18
12/02/2024									
$12.70*	$12.70*	$15.81*	$15.81*	$16.81*	$18.31*	$19.31*	$19.31*	$19.31*	$24.56*
+ 0.76	+ 0.81	+ 0.91	+ 0.96	+ 1.43	+ 1.48	+ 1.91	+ 1.97	+ 4.57	+ 5.18

Wages per hour:
(Counties of Dutchess, Sullivan, Ulster)

750 hour terms at the following wage rate:

1st	2nd	3rd	4th	5th	6th	7th	8th	9th	10th
1-	751-	1501-	2251-	3001-	3751-	4501-	5251-	6001-	6751-
750	1500	2250	3000	3750	4500	5250	6000	6750	7500
07/01/2024									
$22.06	$26.44	$28.50	$32.88	$35.84	$39.71	$43.21	$46.59	$47.95	$51.44
12/02/2024									
$22.06	$26.44	$28.50	$32.88	$35.84	$39.71	$43.21	$46.59	$47.95	$51.94

Supplemental Benefits per hour:
(Counties of Dutchess, Sullivan, Ulster)

1st	2nd	3rd	4th	5th	6th	7th	8th	9th	10th
07/01/2024									
$12.55*	$12.55*	$14.86*	$14.86*	$15.86*	$16.36*	$16.86*	$17.86*	$17.86*	$22.61*
+ 0.76	+ 0.80	+ 0.85	+ 0.89	+ 1.35	+ 1.40	+ 1.82	+ 1.87	+ 4.93	+ 5.02
12/02/2024									
$12.55*	$12.55*	$14.86*	$14.86*	$15.86*	$16.36*	$16.86*	$17.86*	$17.86*	$22.61*
+ 0.76	+ 0.80	+ 0.85	+ 0.89	+ 1.35	+ 1.40	+ 1.82	+ 1.87	+ 4.93	+ 5.02

* This portion of benefits subject to same premium rate as shown for overtime wages.

9-7/52B

Mason - Building — 04/01/2025

JOB DESCRIPTION Mason - Building **DISTRICT** 9

ENTIRE COUNTIES
Dutchess, Orange, Putnam, Sullivan, Ulster

WAGES

Per hour:	07/01/2024	12/02/2024
Building Tile, Marble, & Terrazzo Finisher	$ 47.74	$ 47.82

*To be allocated at a later date.

SUPPLEMENTAL BENEFITS
Journeyworker:

Per Hour	$ 22.11*	$ 22.56*
	+ 6.01	+ 6.02

*This portion of benefits subject to same premium rate as shown for overtime wages

OVERTIME PAY
See (A, *E, Q) on OVERTIME PAGE
Double time rate applies after 10 hours on Saturdays.

HOLIDAY
Paid: See (1) on HOLIDAY PAGE
Overtime: See (5, 6, 11, 15, 16, 25) on HOLIDAY PAGE

9-7/88B-tf

Mason - Building 04/01/2025

JOB DESCRIPTION Mason - Building **DISTRICT** 11

ENTIRE COUNTIES
Putnam, Rockland, Westchester

PARTIAL COUNTIES
Orange: Only the Township of Tuxedo.

WAGES
Per hour:

	07/01/2024
Bricklayer	$ 47.44
Cement Mason	47.44
Plasterer/Stone Mason	47.44
Pointer/Caulker	47.44

Additional $1.00 per hour for power saw work
Additional $0.50 per hour for swing scaffold or staging work

SHIFT WORK
SHIFT WORK: When shift work or an irregular workday is mandated or required by state, federal, county, local or other governmental agency contracts, the following premiums apply:
Irregular workday requires 15% premium
Second shift an additional 15% of wage plus benefits to be paid
Third shift an additional 25% of wage plus benefits to be paid

SUPPLEMENTAL BENEFITS
Per hour:

Journeyman	$ 38.50

OVERTIME PAY
OVERTIME:

Cement Mason	See (B, E, Q, W) on OVERTIME PAGE.
All Others	See (B, E, Q) on OVERTIME PAGE.

HOLIDAY

Paid:	See (1) on HOLIDAY PAGE
Overtime:	See (5, 6, 16, 25) on HOLIDAY PAGE

Whenever any of the above holidays fall on Sunday, they will be observed on Monday. Whenever any of the above holidays fall on Saturday, they will be observed on Friday.

REGISTERED APPRENTICES
Wages per hour:

750 hour terms at the following percentage of Journeyman's wage

1st	2nd	3rd	4th	5th	6th	7th	8th
50%	55%	60%	65%	70%	75%	80%	85%

Supplemental Benefits per hour

750 hour terms at the following percentage of journeyman supplements

1st	2nd	3rd	4th	5th	6th	7th	8th
50%	55%	60%	65%	70%	75%	80%	85%

Apprentices indentured before June 1st, 2011 receive full journeyman benefits

11-5wp-b

Mason - Building 04/01/2025

JOB DESCRIPTION Mason - Building **DISTRICT** 9

ENTIRE COUNTIES
Bronx, Dutchess, Kings, Nassau, New York, Orange, Putnam, Queens, Richmond, Rockland, Suffolk, Sullivan, Ulster, Westchester

WAGES
Per Hour:

	07/01/2024	01/06/2025

Marble Cutters & Setters	$ 63.92	$ 64.21

SUPPLEMENTAL BENEFITS
Per Hour:

Journeyworker	$ 40.05	$ 40.51

OVERTIME PAY
See (B, E, Q, V) on OVERTIME PAGE

HOLIDAY
Paid: See (1) on HOLIDAY PAGE
Overtime: See (5, 6, 8, 11, 15, 16, 25) on HOLIDAY PAGE

REGISTERED APPRENTICES
Wage Per Hour:

750 hour terms at the following wage

1st	2nd	3rd	4th	5th	6th	7th	8th
0-3000	3001-3750	3751-4500	4501-5250	5251-6000	6001-6750	6751-7500	7500+
07/01/2024							
$ 27.01	$ 40.52	$ 43.88	$ 47.26	$ 50.64	$ 54.32	$ 60.71	$ 63.92
01/06/2025							
$ 27.24	$ 40.84	$ 44.25	$ 47.63	$ 51.05	$ 54.58	$ 60.99	$ 64.21

Supplemental Benefits per hour:

1st	2nd	3rd	4th	5th	6th	7th	8th
07/01/2024							
$ 26.42	$ 29.76	$ 30.61	$ 31.44	$ 32.28	$ 37.55	$ 39.23	$ 40.05
01/06/2025							
$ 26.88	$ 30.14	$ 30.95	$ 31.78	$32.59	$38.07	$ 39.71	$ 40.51

9-7/4

Mason - Heavy&Highway — 04/01/2025

JOB DESCRIPTION Mason - Heavy&Highway **DISTRICT** 11

ENTIRE COUNTIES
Dutchess, Sullivan, Ulster

PARTIAL COUNTIES
Orange: Entire county except the Township of Tuxedo.

WAGES
Per hour:

	07/01/2024
Bricklayer	$ 46.95
Cement Mason	46.95
Marble/Stone Mason	46.95
Plasterer	46.95
Pointer/Caulker	46.95

Additional $1.00 per hour for power saw work
Additional $0.50 per hour for swing scaffold or staging work

SHIFT WORK
When shift work or an irregular workday is mandated or required by state, federal, county, local or other governmental contracts, the following rates apply:

Irregular workday requires 15% premium
Second shift an additional 15% of wage plus benefits to be paid
Third shift an additional 25% of wage plus benefits to be paid

SUPPLEMENTAL BENEFITS
Per hour:
Journeyman $ 38.00

OVERTIME PAY
Cement Mason See (B, E, Q, W)
All Others See (B, E, Q)

HOLIDAY

Paid: See (5, 6, 16, 25) on HOLIDAY PAGE
Overtime: See (5, 6, 16, 25) on HOLIDAY PAGE

- Whenever any of the above holidays fall on Sunday, they will be observed on Monday. Whenever any of the above holidays fall on Saturday, they will be observed on Friday.
- Supplemental Benefits are not paid for paid Holiday
- If Holiday is worked, Supplemental Benefits are paid for hours worked.
- Whenever an Employee works within three (3) calendar days before a holiday, the Employee shall be paid for the Holiday.

REGISTERED APPRENTICES

Wages per hour:

750 hour terms at the following percentage of Journeyman's wage

1st	2nd	3rd	4th	5th	6th	7th	8th
50%	55%	60%	65%	70%	75%	80%	85%

Supplemental Benefits per hour

750 hour terms at the following percentage of journeyman supplements

1st	2nd	3rd	4th	5th	6th	7th	8th
50%	55%	60%	65%	70%	75%	80%	85%

Apprentices indentured before June 1st, 2011 receive full journeyman benefits

11-5du-H/H

Mason - Heavy&Highway — 04/01/2025

JOB DESCRIPTION Mason - Heavy&Highway **DISTRICT** 11

ENTIRE COUNTIES

Putnam, Rockland, Westchester

PARTIAL COUNTIES

Orange: Only the Township of Tuxedo.

WAGES

Per hour:

	07/01/2024
Bricklayer	$ 47.94
Cement Mason	47.94
Marble/Stone Mason	47.94
Plasterer	47.94
Pointer/Caulker	47.94

Additional $1.00 per hour for power saw work
Additional $0.50 per hour for swing scaffold or staging work

SHIFT WORK

When shift work or an irregular workday is mandated or required by state, federal, county, local or other governmental contracts, the following rates apply:

Irregular workday requires 15% premium
Second shift an additional 15% of wage plus benefits to be paid
Third shift an additional 25% of wage plus benefits to be paid

SUPPLEMENTAL BENEFITS

Per hour:

Journeyman	$ 38.50

OVERTIME PAY

Cement Mason See (B, E, Q, W)
All Others See (B, E, Q,)

HOLIDAY

Paid: See (5, 6, 16, 25) on HOLIDAY PAGE
Overtime: See (5, 6, 16, 25) on HOLIDAY PAGE

- Whenever any of the above holidays fall on Sunday, they will be observed on Monday. Whenever any of the above holidays fall on Saturday, they will be observed on Friday.
- Supplemental Benefits are not paid for paid Holiday
- If Holiday is worked, Supplemental Benefits are paid for hours worked.
- Whenever an Employee works within three (3) calendar days before a holiday, the Employee shall be paid for the Holiday.

REGISTERED APPRENTICES

Wages per hour:

750 hour terms at the following percentage of Journeyman's wage

1st	2nd	3rd	4th	5th	6th	7th	8th
50%	55%	60%	65%	70%	75%	80%	85%

Supplemental Benefits per hour

750 hour terms at the following percentage of journeyman supplements

1st	2nd	3rd	4th	5th	6th	7th	8th
50%	55%	60%	65%	70%	75%	80%	85%

Apprentices indentured before June 1st, 2011 receive full journeyman benefits

11-5WP-H/H

Operating Engineer - Building / Heavy&Highway 04/01/2025

JOB DESCRIPTION Operating Engineer - Building / Heavy&Highway **DISTRICT** 11

ENTIRE COUNTIES
Delaware, Orange, Rockland, Sullivan, Ulster

WAGES
CLASS A5: Cranes, Derricks and Pile Drivers 100 tons or more and Tower Cranes, with 140ft boom and over.
CLASS A4: Cranes, Derricks and Pile Drivers 100 tons or more and Tower Cranes, with 100ft to 139ft boom.
CLASS A3: Cranes, Derricks and Pile Drivers 100 tons or more and Tower Cranes with a boom under 100ft.
CLASS A2: Cranes, Derricks and Pile Drivers less than 100 tons with 140ft boom and over.
CLASS A1: Cranes, Derricks and Pile Drivers less than 100 tons with a 100ft to 139ft boom.

CLASS A: Cranes, Derricks and Pile Drivers less than 100 tons with a boom under 100ft.; Autograde Combination Subgrader, Base Material Spreader and Base Trimmer (CMI and Similar Types); Autograde Pavement profiler (CMI and Similar Types); Autograde Pavement Profiler and Recycle type (CMI and Similar Type); Autograde Placer-Trimmer-Spreader Comb. (CMI & Similar types); Autograde Slipform Paver (CMI & Similar Types); Central Power Plants (all types); Chief of Party; Concrete Paving Machines; Drill (Bauer, AMI and Similar Types); Drillmaster, Quarrymaster (Down the Hole Drill), Rotary Drill, Self-Propelled Hydraulic Drill, Self-Powered Drill; Draglines; Elevator Graders; Excavator; Front End Loaders (5 yds. and over); Gradall's; Grader-Rago; Helicopters (Co-Pilot); Helicopters (Communications Engineer);Juntann Pile Driver; Locomotive (Large); Mucking Machines; Pavement & Concrete Breaker, i.e., Superhammer & Hoe Ram; Roadway Surface Grinder; Prentice Truck; Scooper (Loader and Shovel); Shovels; Tree Chopper with Boom; Trench Machines (Cable Plow); Tunnel Boring Machine; Vacuum Truck

CLASS B: "A" Frame; Backhoe (Combination); Boom Attachment on Loaders (Rate based on size of Bucket) not applicable to Pipehook; Boring and Drilling Machines; Brush Chopper, Shredder and Tree Shredder, Tree Shearer; Bulldozer(Fine Grade); Cableways; Carryalls; Concrete Pump; Concrete Pumping System, Pump Concrete and Similar Types; Conveyors (125 ft. and over); Drill Doctor (duties incl. Dust Collector Maintenance); Front End Loaders (2 yds. but less than 5 yds.); Graders (Finish); Groove Cutting Machine (Ride on Type); Heater Planer; Hoists (all type Hoists, shall also include Steam, Gas, Diesel, Electric, Air Hydraulic, Single and Double Drum, Concrete, Brick Shaft Caisson, Snorkel Roof, and/or any other Similar Type Hoisting Machines, portable or stationary, except Chicago Boom Type); Long Boom Rate to be applied if Hoist is "Outside Material Tower Hoist"**; Hydraulic Cranes-10 tons and under; Hydraulic Dredge; Hydro-Axe; Hydro Blaster; Jacks-Screw Air Hydraulic Power Operated Unit or Console Type (not hand Jack or Pile Load Test Type); Log Skidder; Pans; Pavers (all) concrete; Plate and Frame Filter Press; Pumpcrete Machines, Squeezecrete & Concrete Pumping (regardless of size); Scrapers; Side Booms; "Straddle"Carrier-Ross and similar types; Winch Trucks (Hoisting); Whip Hammer

CLASS C: Asphalt Curbing Machine; Asphalt Plant Engineer; Asphalt Spreader; Autograde Tube Finisher and Texturing Machine (CMI & Similar types); Autograde Curecrete Machine (CMI & Similar Types); Autograde Curb Trimmer & Sidewalk, Shoulder, Slipform (CMI & Similar Types); Bar Bending Machines (Power); Barrier Moving Machine-Zipper; Batchers, Batching Plant and Crusher on Site; Belt Conveyor Systems; Boom Type Skimmer Machines; Bridge Deck Finisher; Bulldozer(except fine grade); Car Dumpers (Railroad); Compressor and Blower Type Units (used independently or mounted on dual purpose Trucks, on Job Site or in conjunction with jobsite, in Loading and Unloading of Concrete, Cement, Fly Ash, Instantcrete, or Similar Type Materials); Compressors (2 or 3 in Battery); Concrete Finishing Machines; Concrete cleaning decontamination machine operator; Concrete Saws and Cutters (Ride-on type); Concrete Spreaders (Hetzel, Rexomatic and Similar Types); Concrete Vibrators; Conveyors (under 125 feet); Crushing Machines; Directional Boring Machines; Ditching Machine-small (Ditch-witch, Vermeer, or Similar type); Dope Pots (Mechanical with or without pump); Dumpsters; Elevator; Fireman; Fork Lifts (Economobile, Lull and Similar Types of Equipment); Front End Loaders (1 yd. and over but under 2 yds.); Generators (2 or 3 in Battery); Giraffe Grinders; Grout Pump; Gunnite Machines (excluding nozzle); Hammer Vibrator (in conjunction with Generator); Heavy Equipment Robotics Operator Technician; Hoists-Roof, Tugger, Aerial Platform Hoist & House Cars; Hoppers; Hopper Doors (power operated); Hydro Blaster; Hydraulic Jacking Trailer; Ladders (motorized); Laddervator; Locomotive-dinky type; Maintenance -Utility Man; Master Environmental Maintenance Technician; Mechanics; Mixers (Excepting Paving Mixers); Motor Patrols; Pavement Breakers (small self - propelled ride on type-also maintains compressor hydraulic unit); Pavement Breaker-truck mounted; Pipe Bending Machine (Power); Pitch Pump; Plaster Pump (regardless of size); Post Hole Digger (Post Pounder & Auger); Pot Hole Killer Trucks or equivalent; Rod Bending Machines (Power); Roller-Black Top; Scales (Power); Seaman pulverizing mixer; Shoulder widener; Silos; Skidsteer (all attachments); Skimmer Machines (boom-type); Steel Cutting Machine (service & maintain); Tam Rock Drill; Tractors; Transfer Machine; Captain (Power Boats); Tug Master (powerboats); Ultra High Pressure Waterjet Cutting Tool System operator/maintenance technician; Vacuum Blasting Machine; Vibrating Plants (used in conjunction with unloading); Welder and Repair Mechanics

CLASS D: Brooms and Sweepers; Chippers; Compressor (single); Concrete Spreaders (small type); Conveyor Loaders (not including Elevator Graders); Engines-large diesel (1620 HP) and Staging Pump; Farm Tractors; Fertilizing Equipment (Operation & Maintenance of); Fine Grade Machine (small type); Form Line Graders (small type); Front End Loader (under 1 yard); Generator (single); Grease, Gas, Fuel and Oil supply trucks; Heaters (Nelson or other type incl. Propane, Natural Gas or Flow type Units); Lights, Portable Generating Light Plants; Mixers (Concrete, small); Mulching Equipment (Operation and Maintenance of); Pumps (2 or less than 4 inch suction); Pumps (4 inch suction and over incl. submersible pumps); Pumps (Diesel Engine and Hydraulic-immaterial of power); Road Finishing Machines (small type); Rollers-grade, fill or stone base; Seeding Equip. (Operation and Maintenance of); Sprinkler & Water Pump Trucks (used on jobsite or in conjunction with jobsite); Steam Jennies and Boilers-irrespective of use; Stone Spreader; Tamping Machines, Vibrating Ride-on; Temporary Heating Plant (Nelson or other type, incl. Propane, Natural Gas or Flow Type Units); Water & Sprinkler Trucks (used on or in conjunction with jobsite); Welding Machines (Gas, Diesel, and/or Electric Converters of any type, single, two, or three in a battery); Wellpoint Systems (including installation by Bull Gang and Maintenance of)

CLASS E: Assistant Engineer/Oiler; Drillers Helper; Maintenance Apprentice (Deck Hand); Maintenance Apprentice (Oiler); Mechanics' Helper; Tire Repair and Maintenance; Transit/Instrument Man

WAGES:(per hour)

	07/01/2024	07/01/2025 Additional
Class A5	$ 66.97 plus 5.00*	$ 2.50***
Class A4	65.97 plus 5.00*	2.50***
Class A3	64.97 plus 5.00*	2.50***
Class A2	62.47 plus 5.00*	2.50***
Class A1	61.47 plus 5.00*	2.50***
Class A	60.47 plus 5.00*	2.50***
Class B	58.88 plus 5.00*	2.50***
Class C	56.97 plus 5.00*	2.50***
Class D	55.34 plus 5.00*	2.50***
Class E	51.63 plus 5.00*	2.50***
Safety Engineer	61.21 plus 5.00*	2.50***
Helicopter:		
Pilot/Engineer	62.29 plus 5.00*	2.50***
Co Pilot	60.47 plus 5.00*	2.50***
Communications Engineer	60.47 plus 5.00*	2.50***
Surveying:		
Chief of Party	60.47 plus 5.00*	2.50***
Transit/Instrument Man	51.63 plus 5.00*	2.50***
Rod/Chainman	51.05 plus 5.00*	2.50***

Additional $0.75 for Survey work Tunnel under compressed air.
Additional $0.50 for Hydrographic work.

*The $5.00 is added to the Class Base Wage for all hours worked. Additionally, the $5.00 is subject to the V-Code listed on the OVERTIME CODE Sheet.

**Outside Material Hoist (Class B) receives additional $ 1.00 per hour on 110 feet up to 199 feet total height, $ 2.00 per hour on 200 feet and over total height.

***To be allocated at a later date

- On HAZARDOUS WASTE REMOVAL or ASBESTOS REMOVAL work, or any state or federally DESIGNATED HAZARDOUS WASTE SITE:

For projects bid on or before April 1, 2020...Where the Operating Engineer is in direct contact with hazardous material and when personal protective equipment is required for respiratory, skin and eye protection, the Operating Engineer shall receive the hourly wage plus an additional twenty percent (20%) of that wage for the entire shift.

For projects bid after April 1, 2020...On hazardous waste removal work of any kind, including state or federally designated site where the operating engineer is required to wear level A, B, or C personal protection the operating engineer shall receive an hourly wage rate of his regular hourly wage plus $5.00 per hour. An operating engineer working at a hazardous waste removal project or site at a task requiring hazardous waste related certification, but who is not working in a zone requiring level A, B, or C personal protection, shall receive an hourly wage rate of his regular rate plus $ 1.00 per hour. This shall also apply to sites where the level D personal protection is required.

SHIFT WORK
- SHIFT WORK: On all Government mandated irregular or off shift work, an additional 15% on straight time hours.

SUPPLEMENTAL BENEFITS
Per hour:

Journeyman	$ 34.00*

*15% premium is also required on shift work benefits

OVERTIME PAY
See (B, E, Q, *V, X) on OVERTIME PAGE
*15% premium is also required on shift work benefits

HOLIDAY
Paid: See (5, 6, 10, 13, 15) on HOLIDAY PAGE
Overtime: See (5, 6, 10, 13, 15) on HOLIDAY PAGE
Holidays falling on Sunday will be celebrated on Monday.

REGISTERED APPRENTICES
(1) year terms at the following percentage of journeyman's wage:

1st year	60% of Class base wage plus $5.00*
2nd year	70% of Class base wage plus $5.00*
3rd year	80% of Class base wage plus $5.00*
4th year	90% of Class base wage plus $5.00*

*The $5.00 is added to the Class Base Wage for all hours worked. Additionally, the $5.00 is subject to the V-Code listed on the OVERTIME CODE Sheet.

Supplemental Benefits per hour:

Apprentices	$ 34.00

11-825

Operating Engineer - Marine Dredging — 04/01/2025

JOB DESCRIPTION Operating Engineer - Marine Dredging **DISTRICT** 4

ENTIRE COUNTIES
Albany, Bronx, Cayuga, Clinton, Columbia, Dutchess, Essex, Franklin, Greene, Jefferson, Kings, Monroe, Nassau, New York, Orange, Oswego, Putnam, Queens, Rensselaer, Richmond, Rockland, St. Lawrence, Suffolk, Ulster, Washington, Wayne, Westchester

WAGES
These wages do not apply to Operating Engineers on land based construction projects. For those projects, please see the Operating Engineer Heavy/Highway Rates. The wage rates below for all equipment and operators are only for marine dredging work in navigable waters found in the counties listed above.

Per Hour:	07/01/2024
CLASS A1 Deck Captain, Leverman, Mechanical Dredge Operator, Licensed Tug Operator 1000HP or more.	$ 45.26

CLASS A2 Crane Operator (360 swing)	40.33
CLASS B Dozer, Front Loader Operator on Land	To conform to Operating Engineer Prevailing Wage in locality where work is being performed including benefits.
CLASS B1 Derrick Operator (180 swing) Spider/Spill Barge Operator Operator II, Fill Placer, Engineer Chief Mate, Electrician,Chief Welder, Maintenance Engineer,Licensed Boat, Crew Boat Operator	39.14
CLASS B2 Certified Welder	36.84
CLASS C1 Drag Barge Operator, Steward, Mate, Assistant Fill Placer	35.83
CLASS C2 Boat Operator	34.68
CLASS D Shoreman, Deckhand, Oiler, Rodman, Scowman, Cook, Messman, Porter/Janitor	28.81

SUPPLEMENTAL BENEFITS
Per Hour:
THE FOLLOWING SUPPLEMENTAL BENEFITS APPLY TO ALL CATEGORIES

All Classes A & B	$ 12.00 plus 7% of straight time wage, Overtime hours add $ 0.63
All Class C & D	$ 11.75 plus 7% of straight time wage, Overtime hours add $ 0.50

OVERTIME PAY
See (B2, F, R) on OVERTIME PAGE

HOLIDAY
Paid: See (1) on HOLIDAY PAGE
Overtime: See (5, 6, 8, 15, 26) on HOLIDAY PAGE

4-25a-MarDredge

Operating Engineer - Steel Erectors — 04/01/2025

JOB DESCRIPTION Operating Engineer - Steel Erectors **DISTRICT** 11

ENTIRE COUNTIES
Delaware, Orange, Rockland, Sullivan, Ulster

WAGES
CLASS A3: Cranes, Derricks and Pile Drivers 100 tons or more and Tower Cranes, with a 140 ft. boom and over.

CLASS A2: Cranes, Derricks and Pile Drivers 100 tons or more and Tower Cranes, with up to a 139 ft. boom and under.

CLASS A1: Cranes, Derricks and Pile Drivers less than 100 tons with a 140 ft. boom and over.

CLASS A: Cranes, Derricks and Pile Drivers less than 100 tons with up to a 139 ft. boom and under.

CLASS B: "A" Frame; Cherry Pickers(10 tons and under); Hoists (all type Hoists, shall also include Steam, Gas, Diesel, Electric, Air Hydraulic, Single and Double Drum, Concrete, Brick Shaft Caisson, Snorkel Roof, and/or any other Similar Type Hoisting Machines, portable or stationary, except Chicago Boom Type); Jacks-Screw Air Hydraulic Power Operated Unit or Console Type (not hand Jack or Pile Load Test Type); Side Booms; Straddle Carrier

CLASS C: Aerial Platform used as Hoist; Compressors (2 or 3 in Battery); Concrete cleaning/ decontamination machine operator; Directional Boring Machines; Elevator or House Cars; Conveyers and Tugger Hoists; Fireman; Fork Lifts; Generators (2 or 3 in Battery); Heavy Equipment Robotics Operator/Technician; Master Environmental Maintenance Technician; Maintenance -Utility Man; Rod Bending Machines (Power); Captain(powerboat); Tug Master; Ultra High Pressure Waterjet Cutting Tool System; Vacuum Blasting Machine; Welding Machines(gas or electric,2 or 3 in battery, including diesels); Transfer Machine; Apprentice Engineer/Oiler with either one compressor or one welding machine when used for decontamination and remediation

CLASS D: Compressor (single); Welding Machines (Gas, Diesel, and/or Electric Converters of any type); Welding System Multiple (Rectifier Transformer type)

CLASS E: Assistant Engineer/Oiler; Maintenance Apprentice (Deck Hand);Drillers Helper; Maintenance Apprentice (Oiler); Mechanics' Helper; Transit/Instrument Man

WAGES:(per hour)

	07/01/2024	07/01/2025 Additional
Class A3	$ 68.99 plus 5.00*	$ 2.50**
Class A2	67.33 plus 5.00*	2.50**
Class A1	64.49 plus 5.00*	2.50**
Class A	62.83 plus 5.00*	2.50**
Class B	60.04 plus 5.00*	2.50**
Class C	57.38 plus 5.00*	2.50**
Class D	55.85 plus 5.00*	2.50**
Class E	52.09 plus 5.00*	2.50**
Vacuum Truck	60.80 plus 5.00*	2.50**
Safety Engineer	61.66 plus 5.00*	2.50**
Helicopter:		
Pilot/Engineer	64.49 plus 5.00*	2.50**
Co Pilot	64.10 plus 5.00*	2.50**
Communications Engineer	64.10 plus 5.00*	2.50**
Surveying:		
Chief of Party	60.80 plus 5.00*	2.50**
Transit/Instrument man	52.09 plus 5.00*	2.50**
Rod/Chainman	51.05 plus 5.00*	2.50**

Additional $0.75 for Survey work Tunnels under compressed air.
Additional $0.50 for Hydrographic work.

*The $5.00 is added to the Class Base Wage for all hours worked. Additionally, the $5.00 is subject to the V-Code listed on the OVERTIME CODE Sheet.

**To be allocated at a later date

- On HAZARDOUS WASTE REMOVAL or ASBESTOS REMOVAL work, or any state or federally DESIGNATED HAZARDOUS WASTE SITE:

For projects bid on or before April 1, 2020...Where the Operating Engineer is in direct contact with hazardous material and when personal protective equipment is required for respiratory, skin and eye protection, the Operating Engineer shall receive the hourly wage plus an additional twenty percent (20%) of that wage for the entire shift.

For projects bid after April 1, 2020...On hazardous waste removal work of any kind, including state or federally designated site where the operating engineer is required to wear level A, B, or C personal protection the operating engineer shall receive an hourly wage rate of his regular hourly wage plus $5.00 per hour. An operating engineer working at a hazardous waste removal project or site at a task requiring hazardous waste related certification, but who is not working in a zone requiring level A, B, or C personal protection, shall receive an hourly wage rate of his regular rate plus $ 1.00 per hour. This shall also apply to sites where the level D personal protection is required.

SHIFT WORK

- SHIFT WORK: On all Government mandated irregular or off shift work, an additional 15% on straight time hours.

SUPPLEMENTAL BENEFITS

Per hour:

Journeyman	$ 34.00*

*15% premium is also required on shift work benefits

OVERTIME PAY
See (B, E, Q, *V, X) on OVERTIME PAGE
*15% premium is also required on shift work benefits

HOLIDAY
Paid: See (5, 6, 10, 13, 15) on HOLIDAY PAGE
Overtime: See (5, 6, 10, 13, 15) on HOLIDAY PAGE
Holidays falling on Sunday will be celebrated on Monday.

REGISTERED APPRENTICES
(1) year terms at the following percentage of journeyman's wage.

1st year	60% of Class base wage plus $5.00*
2nd year	70% of Class base wage plus $5.00*
3rd year	80% of Class base wage plus $5.00*
4th year	90% of Class base wage plus $5.00*

*The $5.00 is added to the Class Base Wage for all hours worked. Additionally, the $5.00 is subject to the V-Code listed on the OVERTIME CODE Sheet.

Supplemental Benefits per hour:

Apprentices	$ 34.00

11-825SE

Painter — 04/01/2025

JOB DESCRIPTION Painter **DISTRICT** 1

ENTIRE COUNTIES
Columbia, Dutchess, Greene, Orange, Sullivan, Ulster

WAGES
Per hour

	07/01/2024	05/01/2025 Additional
Brush/Paper Hanger	$ 38.81	$ 1.99*
Dry Wall Finisher	38.81	1.99*
Lead Abatement	38.81	1.99*
Sandblaster-Painter	38.81	1.99*
Spray Rate	39.81	1.99*

(*) To be allocated at later date.

See Bridge Painting rates for the following work:
Structural Steel, all work performed on tanks, ALL BRIDGES, towers, smoke stacks, flag poles. Rate shall apply to all of said areas from the ground up.

SUPPLEMENTAL BENEFITS
Per hour

Journeyworker	$ 27.37

OVERTIME PAY
See (B, E, E2, Q) on OVERTIME PAGE

HOLIDAY
Paid: See (1) on HOLIDAY PAGE
Overtime: See (5, 6) on HOLIDAY PAGE

REGISTERED APPRENTICES
Wages per hour

Six (6) month terms at the following percentage of Journeyperson's wage

1st	2nd	3rd	4th	5th	6th
50%	55%	65%	75%	85%	95%

Supplemental Benefits per hour worked

1st term	$ 11.39
All others	27.37

1-155

Painter - Bridge & Structural Steel 04/01/2025

JOB DESCRIPTION Painter - Bridge & Structural Steel **DISTRICT** 8

ENTIRE COUNTIES
Albany, Bronx, Clinton, Columbia, Dutchess, Essex, Franklin, Fulton, Greene, Hamilton, Kings, Montgomery, Nassau, New York, Orange, Putnam, Queens, Rensselaer, Richmond, Rockland, Saratoga, Schenectady, Schoharie, Suffolk, Sullivan, Ulster, Warren, Washington, Westchester

WAGES
Per Hour:
STEEL:

Bridge Painting:	07/01/2024
	$ 56.00
	+ 10.35*

ADDITIONAL $7.00 per hour for POWER TOOL/SPRAY, whether straight time or overtime.

NOTE: All premium wages are to be calculated on base rate per hour only.

* For the period of May 1st to November 15th, this amount is payable up to 40 hours. For the period of Nov 16th to April 30th, this amount is payable up to 50 hours. EXCEPTION: First and last week of employment, and for the weeks of Memorial Day, Independence Day and Labor Day, where the amount is paid for the actual number of hours worked (50 hour cap).

NOTE: Generally, for Bridge Painting Contracts, ALL WORKERS on and off the bridge (including Flagmen) are to be paid Painter's Rate; the contract must be ONLY for Bridge Painting.

SHIFT WORK
When directly specified in public agency or authority contract documents for an employer to work a second shift and works the second shift with employees other than from the first shift, all employees who work the second shift will be paid 10% of the base wage shift differential in lieu of overtime for the first eight (8) hours worked after which the employees shall be paid at time and one half of the regular wage rate. When a single irregular work shift is mandated in the job specifications or by the contracting agency, wages shall be paid at time and one half for single shifts between the hours of 3pm-11pm or 11pm-7am.

SUPPLEMENTAL BENEFITS
Per Hour:
Journeyworker:

	$ 12.43
	+ 31.55*

* For the period of May 1st to November 15th, this amount is payable up to 40 hours. For the period of Nov 16th to April 30th, this amount is payable up to 50 hours. EXCEPTION: First and last week of employment, and for the weeks of Memorial Day, Independence Day and Labor Day, where the amount is paid for the actual number of hours worked (50 hour cap).

OVERTIME PAY
See (B, F, R) on OVERTIME PAGE

HOLIDAY

Paid:	See (1) on HOLIDAY PAGE
Overtime:	See (4, 6) on HOLIDAY PAGE

REGISTERED APPRENTICES
Wage - Per hour:
Apprentices: (1) year terms.

1st year	$ 22.40
	+ 4.14
2nd year	$ 33.60
	+ 6.21
3rd year	$ 44.80
	+ 8.28

Supplemental Benefits - Per hour:

1st year	$ 1.16
	+ 12.62
2nd year	$ 7.46

	+ 18.93
3rd year	$ 9.94
	+ 25.24

NOTE: All premium wages are to be calculated on base rate per hour only.

8-DC-9/806/155-BrSS

Painter - Line Striping — 04/01/2025

JOB DESCRIPTION Painter - Line Striping **DISTRICT** 8

ENTIRE COUNTIES
Albany, Clinton, Columbia, Dutchess, Essex, Franklin, Fulton, Greene, Hamilton, Montgomery, Nassau, Orange, Putnam, Rensselaer, Rockland, Saratoga, Schenectady, Schoharie, Suffolk, Sullivan, Ulster, Warren, Washington, Westchester

WAGES
Per hour:

Painter (Striping-Highway):	07/01/2024	04/01/2025	04/01/2026
Striping-Machine Operator*	$ 34.12	$ 35.49	$ 36.93
Linerman Thermoplastic	41.12	42.74	44.44

Note: * Includes but is not limited to: Positioning of cones and directing of traffic using hand held devices. Excludes the Driver/Operator of equipment used in the maintenance and protection of traffic safety.

SHIFT WORK
When directly specified in public agency or authority contract documents there shall be a 30% night shift premium pay differential for all work performed after 9:00pm and before 5:00am.

SUPPLEMENTAL BENEFITS
Per hour paid:
Journeyworker:

Striping Machine Operator:	$23.65	$ 24.30	$ 24.95
Linerman Thermoplastic:	23.65	24.30	24.95

OVERTIME PAY
See (B, B2, E2, F, S) on OVERTIME PAGE

HOLIDAY
Paid: See (5, 20) on HOLIDAY PAGE
Overtime: See (5, 20) on HOLIDAY PAGE

REGISTERED APPRENTICES
One (1) year terms at the following wage rates:

	07/01/2024	01/01/2025	04/01/2025	04/01/2026
1st Term:	$ 16.00	$ 16.50	$ 16.50	$ 16.50
2nd Term:	20.47	20.47	21.29	22.16
3rd Term:	27.30	27.30	28.39	29.54

Supplemental Benefits per hour:

All terms:	$ 23.65	$ 23.65	$ 24.30	$ 24.95

8-1456-LS

Painter - Metal Polisher — 04/01/2025

JOB DESCRIPTION Painter - Metal Polisher **DISTRICT** 8

ENTIRE COUNTIES
Albany, Allegany, Bronx, Broome, Cattaraugus, Cayuga, Chautauqua, Chemung, Chenango, Clinton, Columbia, Cortland, Delaware, Dutchess, Erie, Essex, Franklin, Fulton, Genesee, Greene, Hamilton, Herkimer, Jefferson, Kings, Lewis, Livingston, Madison, Monroe, Montgomery, Nassau, New York, Niagara, Oneida, Onondaga, Ontario, Orange, Orleans, Oswego, Otsego, Putnam, Queens, Rensselaer, Richmond, Rockland, Saratoga, Schenectady, Schoharie, Schuyler, Seneca, St. Lawrence, Steuben, Suffolk, Sullivan, Tioga, Tompkins, Ulster, Warren, Washington, Wayne, Westchester, Wyoming, Yates

WAGES

	07/01/2024
Metal Polisher	$ 39.33
Metal Polisher*	40.43

Metal Polisher**	43.33

*Note: Applies on New Construction & complete renovation
** Note: Applies when working on scaffolds over 34 feet.

SUPPLEMENTAL BENEFITS

Per Hour:	07/01/2024
Journeyworker:	
All classification	$ 12.79

OVERTIME PAY
See (B, E, P, T) on OVERTIME PAGE

HOLIDAY

Paid:	See (5, 6, 11, 15, 16, 25, 26) on HOLIDAY PAGE
Overtime:	See (5, 6, 11, 15, 16, 25, 26) on HOLIDAY PAGE

REGISTERED APPRENTICES
Wages per hour:
One (1) year term at the following wage rates:

	07/01/2024
1st year	$ 19.67
2nd year	21.63
3rd year	23.60
1st year*	$ 22.06
2nd year*	22.07
3rd year*	24.14
1st year**	$ 22.17
2nd year**	24.13
3rd year**	26.10

*Note: Applies on New Construction & complete renovation
** Note: Applies when working on scaffolds over 34 feet.

Supplemental benefits:
Per hour:

1st year	$ 8.69
2nd year	8.69
3rd year	8.69

8-8A/28A-MP

Plumber — 04/01/2025

JOB DESCRIPTION Plumber **DISTRICT** 11

ENTIRE COUNTIES
Orange, Rockland, Sullivan

PARTIAL COUNTIES
Ulster: Only the Townships of Plattekill, Marlboro, Wawarsing, and Shawangunk (except for Wallkill and Shawangunk Prisons).

WAGES
REFRIGERATION: For commercial and industrial refrigeration which means service, maintenance, and installation work where the combined compressor tonnage does not exceed 40 tons.
AIR CONDITIONING: Air conditioning to be installed that is water cooled shall not exceed 25 tons. This will include the piping of the component system and erection of water tower. Air conditioning that is air cooled shall not exceed 50 tons.

WAGES: (per hour)

	07/01/2024	05/01/2025 Additional
Plumber	$ 40.09	$ 2.50*

*To be allocated at a later date

Star Certification: an additional $ 1.00 per hour over scale will be paid to all those who have Star Certification.

SHIFT WORK

Shift Differential: When mandated by the governmental agency, an additional 15% premium will be paid for irregular workday or for 2nd and 3rd shift.

SUPPLEMENTAL BENEFITS
Per hour:
Journeyman $ 36.78*

*For overtime or shift differential work, $0.10 is paid at straight time, the remaining balance is paid at the same premium as the wages.

OVERTIME PAY
See (B, G, P, *V) on OVERTIME PAGE
* A portion of the benefit amount is subject to the V code for overtime and shift differential work.

HOLIDAY
Paid: See (5, 6, 13, 15, 25) on HOLIDAY PAGE
Overtime: See (5, 6, 13, 15, 25) on HOLIDAY PAGE

REGISTERED APPRENTICES
(1)year terms at the following wage.

	07/01/2024
1st term	$ 18.04
2nd term	22.05
3rd term	26.06
4th term	30.07
5th term	34.08

Supplemental Benefits per hour:
Apprentices

1st term	$ 16.62*
2nd term	20.29*
3rd term	23.95*
4th term	27.63*
5th term	31.19*

*For overtime or shift differential work, $0.10 is paid at straight time, the remaining balance is paid at the same premium as the wages.
11-373 Refrig

Plumber — 04/01/2025

JOB DESCRIPTION Plumber **DISTRICT** 11

ENTIRE COUNTIES
Orange, Rockland, Sullivan

PARTIAL COUNTIES
Ulster: Only the Townships of Plattekill, Marlboro, Wawarsing, and Shawangunk (except for Wallkill and Shawangunk Prisons).

WAGES
WAGES:(per hour) 07/01/2024

Plumber/Steamfitter $ 51.20

Note: For all work 40-60 feet above ground add $ 0.25 per hour, over 60 feet add $ 0.50 per hour.

SHIFT WORK
Shift Differential: When mandated by the governmental agency, an additional 15% premium will be paid for irregular workday or for 2nd and 3rd shift.

SUPPLEMENTAL BENEFITS
Per hour:

Journeyman $ 45.57

*For overtime or shift differential work, $0.10 is paid at straight time, the remaining balance is paid at the same premium as the wages.

OVERTIME PAY
See (B, E, Q, *V) on OVERTIME PAGE
* A portion of the benefit amount is subject to the V code for overtime and shift differential work.

HOLIDAY
Paid: See (1) on HOLIDAY PAGE
Overtime: See (5, 6, 15, 16) on HOLIDAY PAGE
When a holiday falls on a Saturday, the day prior shall be considered and recognized as the holiday. When a holiday falls on a Sunday, the day proceeding shall be considered and recognized as the holiday to be observed.

REGISTERED APPRENTICES
(1) year terms at the following wages.

	07/01/2024
1st term	$ 17.92
2nd term	23.04
3rd term	28.16
4th term	33.28
5th term	40.96

Supplemental Benefits per hour:

1st term	$ 16.03*
2nd term	20.58*
3rd term	25.12*
4th term	29.68*
5th term	36.48*

*For overtime or shift differential work, $0.10 is paid at straight time, the remaining balance is paid at the same premium as the wages.

11-373 SF

Roofer — 04/01/2025

JOB DESCRIPTION Roofer **DISTRICT** 9

ENTIRE COUNTIES
Bronx, Dutchess, Kings, New York, Orange, Putnam, Queens, Richmond, Rockland, Sullivan, Ulster, Westchester

WAGES
Per Hour: 07/01/2024

Roofer/Waterproofer $ 48.50
+ $7.00*

* This portion is not subjected to overtime premiums.

Note: Abatement/Removal of Asbestos containing roofs and roofing material is classified as Roofer.

SUPPLEMENTAL BENEFITS
Per Hour: $ 31.87

OVERTIME PAY
See (B, H) on OVERTIME PAGE
Note: An observed holiday that falls on a Sunday will be observed the following Monday.

HOLIDAY
Overtime: See (5, 6) on HOLIDAY PAGE

REGISTERED APPRENTICES
(1) year term apprentices indentured prior to 01/01/2023

1st	2nd	3rd	4th
$ 16.97	$ 24.25	$ 29.10	$ 36.37
	+ 3.50*	+ 4.20*	+ 5.26*

Supplements:

1st	2nd	3rd	4th
$ 4.10	$ 16.17	$ 19.31	$ 24.02

* This portion is not subjected to overtime premiums.

(1) year term apprentices indentured after 01/01/2023

1st	2nd	3rd	4th	5th
$ 18.43	$ 21.82	$ 24.25	$ 29.10	$ 36.37
	+ 3.16*	+ 3.50*	+ 4.20*	+ 5.26

Supplements:

1st	2nd	3rd	4th	5th
$ 7.73	$ 14.59	$ 16.17	$ 19.31	$ 24.02

* This portion is not subjected to overtime premiums.

9-8R

Sheetmetal Worker — 04/01/2025

JOB DESCRIPTION Sheetmetal Worker **DISTRICT** 8

ENTIRE COUNTIES
Dutchess, Orange, Putnam, Rockland, Sullivan, Ulster, Westchester

WAGES

	07/01/2024
SheetMetal Worker	$ 49.51
	+ 3.71*

*This portion of the benefit is NOT subject to the SAME PREMIUM as shown for overtime.

SHIFT WORK
For all NYS D.O.T. and other Governmental mandated off-shift work:
10% increase for additional shifts for a minimum of five (5) days

SUPPLEMENTAL BENEFITS
Journeyworker $ 46.20

OVERTIME PAY
OVERTIME:.. See (B, E, Q,) on OVERTIME PAGE.

HOLIDAY
Paid: See (1) on HOLIDAY PAGE
Overtime: See (5, 6, 8, 15, 16, 23) on HOLIDAY PAGE

REGISTERED APPRENTICES

1st	2nd	3rd	4th	5th	6th	7th	8th
$ 20.20	$ 20.81	$ 23.12	$ 25.42	$ 27.74	$ 30.08	$ 32.86	$ 35.63
+ 1.48*	+ 1.67*	+ 1.86*	+ 2.04*	+ 2.23*	+ 2.41*	+ 2.60*	+ 2.78*

*This portion of the benefit is NOT subject to the SAME PREMIUM as shown for overtime.

Supplemental Benefits per hour:

Apprentices	
1st term	$ 18.07
2nd term	22.24
3rd term	24.71
4th term	27.21
5th term	29.67
6th term	32.12
7th term	34.12
8th term	36.15

Sprinkler Fitter — 04/01/2025

JOB DESCRIPTION Sprinkler Fitter **DISTRICT** 1

ENTIRE COUNTIES
Dutchess, Orange, Putnam, Rockland, Sullivan, Ulster, Westchester

WAGES
Per hour 07/01/2024

Sprinkler Fitter $ 53.34

SUPPLEMENTAL BENEFITS
Per hour

Journeyworker $ 30.77

OVERTIME PAY
See (B, E, Q) on OVERTIME PAGE

HOLIDAY
Paid: See (1) on HOLIDAY PAGE
Overtime: See (5, 6) on HOLIDAY PAGE
Note: When a holiday falls on Sunday, the following Monday shall be considered a holiday and all work performed on either day shall be at the double time rate. When a holiday falls on Saturday, the preceding Friday shall be considered a holiday and all work performed on either day shall be at the double time rate.

REGISTERED APPRENTICES
Wages per hour

One Half Year terms at the following wage.

1st	2nd	3rd	4th	5th	6th	7th	8th	9th	10th
$ 25.89	$ 28.77	$ 31.39	$ 34.27	$ 37.14	$ 40.02	$ 42.90	$ 45.77	$ 48.65	$ 51.53

Supplemental Benefits per hour

1st	2nd	3rd	4th	5th	6th	7th	8th	9th	10th
$ 9.18	$ 9.18	$ 20.90	$ 20.90	$ 21.15	$ 21.15	$ 21.15	$ 21.15	$ 21.15	$ 21.15

1-669.2

Teamster - Building / Heavy&Highway 04/01/2025

JOB DESCRIPTION Teamster - Building / Heavy&Highway **DISTRICT** 11

ENTIRE COUNTIES
Dutchess, Orange, Rockland, Sullivan, Ulster

WAGES
GROUP 1: LeTourneau Tractors, Double Barrel Euclids, Athney Wagons and similar equipment (except when hooked to scrapers), I-Beam and Pole Trailers, Tire Trucks, Tractor and Trailers with 5 axles and over, Articulated Back Dumps and Road Oil Distributors, Articulated Water Trucks and Fuel Trucks/Trailers, positions requiring a HAZMAT CDL endorsement.

GROUP 1A: Drivers on detachable Gooseneck Low Bed Trailers rated over 35 tons.

GROUP 2: All equipment 25 yards and up to and including 30-yard bodies and cable Dump Trailers and Powder and Dynamite Trucks.

GROUP 3: All Equipment up to and including 24-yard bodies, Mixer Trucks, Dump Crete Trucks and similar types of equipment, Fuel Trucks, Batch Trucks and all other Tractor Trailers, Hi-Rail Truck.

GROUP 4: Tri-Axles, Ten Wheelers, Grease Trucks, Tillerman, Pattern Trucks, Attenuator Trucks, Water Trucks, Bus.

GROUP 5: Straight Trucks.

GROUP 6: Pick-up Trucks for hauling materials and parts, and Escort Man over-the-road.

WAGES: (per hour)	07/01/2024
GROUP 1	$ 34.58
GROUP 1A	35.72
GROUP 2	34.02
GROUP 3	33.80
GROUP 4	33.69
GROUP 5	33.57
GROUP 6	33.57

NOTE ADDITIONAL PREMIUMS:

- Employees engaged in hazardous/toxic waste removal, on a State or Federally designated hazardous/toxic waste site, where the employee comes in contact with hazardous/toxic waste material and when personal protective equipment is required for respiratory, skin, or eye protection, the employee shall receive an additional 20% premium above the hourly wage.

SHIFT WORK
- On projects requiring an irregular shift a premium of 10% will be paid on wages. The premium will be paid for off-shift or irregular shift work when mandated by Governmental Agency.

SUPPLEMENTAL BENEFITS
Per hour:

First 40 hours	$ 44.59
Over 40 hours	36.99

OVERTIME PAY
See (*B, E, **E2, ***P, X) on OVERTIME PAGE
*Holidays worked Monday through Friday receive Double Time (2x) after 8 hours.
**Makeup day limited to the employees who were working on the site that week.
***Sunday Holidays are paid at a rate of double time and one half (2.5x) for all hours worked.

HOLIDAY
Paid: See (5, 6, 15, 25) on HOLIDAY PAGE
Overtime: See (*1) on HOLIDAY PAGE
- Any employee working two (2) days in any calendar week during which a holiday occurs shall receive a days pay for each holiday occurring during said week. This provision shall also apply if a holiday falls on a Saturday or Sunday.
*See OVERTIME PAY section for when additional premium is applicable on Holiday hours worked.

Teamster - Delivery - Building / Heavy&Highway 04/01/2025

JOB DESCRIPTION Teamster - Delivery - Building / Heavy&Highway **DISTRICT** 11

ENTIRE COUNTIES
Dutchess, Orange, Rockland, Sullivan, Ulster

WAGES
THESE RATES ARE ONLY TO BE USED FOR DELIVERY OF AGGREGATE MATERIALS TO THE JOB SITE. FOR ALL ONSITE WORK AND HAULING OF SPOILS SEE THE TEAMSTER BUILDING/HEAVY & HIGHWAY RATES.

Group 1	Tractor Trailer Drivers
Group 2	Tri- Axle

Wages:	07/01/2024
Group 1	$ 33.70
Group 2	29.70

Hazardous/Toxic Waste Removal additional 20% when personal protective equipment is required.

SUPPLEMENTAL BENEFITS
Per hour paid:

First 40 hours	$ 32.30
Over 40 hours	0.00

OVERTIME PAY
See (B, E, Q, X) on OVERTIME PAGE

HOLIDAY
Paid: See (5, 13, 15, 16, 20, 22, 25, 26) on HOLIDAY PAGE
Overtime: See (5, 13, 15, 16, 20, 22, 25, 26) on HOLIDAY PAGE
- Employee must work either the scheduled day of work before or the scheduled day of work after the holiday in the workweek.
- Any employee working one (1) day in the calendar week during which a holiday occurs shall receive a day's pay for each holiday occurring during said week. This provision shall also apply if a holiday falls on a Saturday.
- When any of the recognized holidays occur on Sunday and are celebrated any day before or after the holiday Sunday, such days shall be considered as the holiday and paid for as such.

11-445 B/HH Delivery

Welder 04/01/2025

JOB DESCRIPTION Welder **DISTRICT** 1

ENTIRE COUNTIES
Albany, Allegany, Bronx, Broome, Cattaraugus, Cayuga, Chautauqua, Chemung, Chenango, Clinton, Columbia, Cortland, Delaware, Dutchess, Erie, Essex, Franklin, Fulton, Genesee, Greene, Hamilton, Herkimer, Jefferson, Kings, Lewis, Livingston, Madison, Monroe, Montgomery, Nassau, New York, Niagara, Oneida, Onondaga, Ontario, Orange, Orleans, Oswego, Otsego, Putnam, Queens, Rensselaer, Richmond, Rockland, Saratoga, Schenectady, Schoharie, Schuyler, Seneca, St. Lawrence, Steuben, Suffolk, Sullivan, Tioga, Tompkins, Ulster, Warren, Washington, Wayne, Westchester, Wyoming, Yates

WAGES
Per hour 07/01/2024

Welder: To be paid the same rate of the mechanic performing the work.*

*EXCEPTION: If a specific welder certification is required, then the 'Certified Welder' rate in that trade tag will be paid.

OVERTIME PAY

HOLIDAY

1-As Per Trade

Overtime Codes

Following is an explanation of the code(s) listed in the OVERTIME section of each classification contained in the attached schedule. Additional requirements may also be listed in the HOLIDAY section.

NOTE: Supplemental Benefits are 'Per hour worked' (for each hour worked) unless otherwise noted

(AA)	Time and one half of the hourly rate after 7 and one half hours per day
(A)	Time and one half of the hourly rate after 7 hours per day
(B)	Time and one half of the hourly rate after 8 hours per day
(B1)	Time and one half of the hourly rate for the 9th & 10th hours week days and the 1st 8 hours on Saturday. Double the hourly rate for all additional hours
(B2)	Time and one half of the hourly rate after 40 hours per week
(B3)	Time and one half of the hourly rate after 40 straight hours per week
(C)	Double the hourly rate after 7 hours per day
(C1)	Double the hourly rate after 7 and one half hours per day
(D)	Double the hourly rate after 8 hours per day
(D1)	Double the hourly rate after 9 hours per day
(E)	Time and one half of the hourly rate on Saturday
(E1)	Time and one half 1st 4 hours on Saturday; Double the hourly rate all additional Saturday hours
(E2)	Saturday may be used as a make-up day at straight time when a day is lost during that week due to inclement weather
(E3)	Between November 1st and March 3rd Saturday may be used as a make-up day at straight time when a day is lost during that week due to inclement weather, provided a given employee has worked between 16 and 32 hours that week
(E4)	Saturday and Sunday may be used as a make-up day at straight time when a day is lost during that week due to inclement weather
(E5)	Double time after 8 hours on Saturdays
(F)	Time and one half of the hourly rate on Saturday and Sunday
(G)	Time and one half of the hourly rate on Saturday and Holidays
(H)	Time and one half of the hourly rate on Saturday, Sunday, and Holidays
(I)	Time and one half of the hourly rate on Sunday
(J)	Time and one half of the hourly rate on Sunday and Holidays
(K)	Time and one half of the hourly rate on Holidays
(L)	Double the hourly rate on Saturday
(M)	Double the hourly rate on Saturday and Sunday
(N)	Double the hourly rate on Saturday and Holidays
(O)	Double the hourly rate on Saturday, Sunday, and Holidays
(P)	Double the hourly rate on Sunday
(Q)	Double the hourly rate on Sunday and Holidays
(R)	Double the hourly rate on Holidays

(S) Two and one half times the hourly rate for Holidays

(S1) Two and one half times the hourly rate the first 8 hours on Sunday or Holidays One and one half times the hourly rate all additional hours.

(T) Triple the hourly rate for Holidays

(U) Four times the hourly rate for Holidays

(V) Including benefits at SAME PREMIUM as shown for overtime

(W) Time and one half for benefits on all overtime hours.

(X) Benefits payable on Paid Holiday at straight time. If worked, additional benefit amount will be required for worked hours. (Refer to other codes listed.)

Holiday Codes

PAID Holidays:

Paid Holidays are days for which an eligible employee receives a regular day's pay, but is not required to perform work. If an employee works on a day listed as a paid holiday, this remuneration is in addition to payment of the required prevailing rate for the work actually performed.

OVERTIME Holiday Pay:

Overtime holiday pay is the premium pay that is required for work performed on specified holidays. It is only required where the employee actually performs work on such holidays. The applicable holidays are listed under HOLIDAYS: OVERTIME. The required rate of pay for these covered holidays can be found in the OVERTIME PAY section listings for each classification.

Following is an explanation of the code(s) listed in the HOLIDAY section of each classification contained in the attached schedule. The Holidays as listed below are to be paid at the wage rates at which the employee is normally classified.

(1)	None
(2)	Labor Day
(3)	Memorial Day and Labor Day
(4)	Memorial Day and July 4th
(5)	Memorial Day, July 4th, and Labor Day
(6)	New Year's, Thanksgiving, and Christmas
(7)	Lincoln's Birthday, Washington's Birthday, and Veterans Day
(8)	Good Friday
(9)	Lincoln's Birthday
(10)	Washington's Birthday
(11)	Columbus Day
(12)	Election Day
(13)	Presidential Election Day
(14)	1/2 Day on Presidential Election Day
(15)	Veterans Day
(16)	Day after Thanksgiving
(17)	July 4th
(18)	1/2 Day before Christmas
(19)	1/2 Day before New Years
(20)	Thanksgiving
(21)	New Year's Day
(22)	Christmas
(23)	Day before Christmas
(24)	Day before New Year's
(25)	Presidents' Day
(26)	Martin Luther King, Jr. Day
(27)	Memorial Day
(28)	Easter Sunday

(29) Juneteenth

New York State Department of Labor - Bureau of Public Work
State Office Building Campus
Building 12 - Room 130
Albany, New York 12226

REQUEST FOR WAGE AND SUPPLEMENT INFORMATION

As Required by Articles 8 and 9 of the NYS Labor Law

Fax (518) 485-1870 or mail this form for new schedules or for determination for additional occupations.

This Form Must Be Typed

Submitted By: (Check Only One) ☐ Contracting Agency ☐ Architect or Engineering Firm ☐ Public Work District Office Date:

A. Public Work Contract to be let by: (Enter Data Pertaining to Contracting/Public Agency)

1. Name and complete address ☐ (Check if new or change)

Telephone Fax

E-Mail:

2. NY State Units (see Item 5).

- ☐ 01 DOT
- ☐ 02 OGS
- ☐ 03 Dormitory Authority
- ☐ 04 State University Construction Fund
- ☐ 05 Mental Hygiene Facilities Corp.
- ☐ 06 OTHER N.Y. STATE UNIT
- ☐ 07 City
- ☐ 08 Local School District
- ☐ 09 Special Local District, i.e., Fire, Sewer, Water District
- ☐ 1O Village
- ☐ 11 Town
- ☐ 12 County
- ☐ 13 Other Non-N.Y. State (Describe)

3. SEND REPLY TO ☐ (check if new or change)
Name and complete address:

Telephone Fax

E-Mail:

4. SERVICE REQUIRED. Check appropriate box and provide project information.

☐ New Schedule of Wages and Supplements.

APPROXIMATE BID DATE :

☐ Additional Occupation and/or Redetermination

PRC NUMBER ISSUED PREVIOUSLY FOR THIS PROJECT :

OFFICE USE ONLY

B. PROJECT PARTICULARS

5. Project Title

Description of Work

Contract Identification Number

Note: For NYS units, the OSC Contract No.

6. Location of Project:
Location on Site

Route No/Street Address

Village or City

Town

County

7. Nature of Project - Check One:

- ☐ 1. New Building
- ☐ 2. Addition to Existing Structure
- ☐ 3. Heavy and Highway Construction (New and Repair)
- ☐ 4. New Sewer or Waterline
- ☐ 5. Other New Construction (Explain)
- ☐ 6. Other Reconstruction, Maintenance, Repair or Alteration
- ☐ 7. Demolition
- ☐ 8. Building Service Contract

8. OCCUPATION FOR PROJECT :

- ☐ Construction (Building, Heavy Highway/Sewer/Water)
- ☐ Tunnel
- ☐ Residential
- ☐ Landscape Maintenance
- ☐ Elevator maintenance
- ☐ Exterminators, Fumigators
- ☐ Fire Safety Director, NYC Only
- ☐ Fuel Delivery
- ☐ Guards, Watchmen
- ☐ Janitors, Porters, Cleaners, Elevator Operators
- ☐ Moving furniture and equipment
- ☐ Trash and refuse removal
- ☐ Window cleaners
- ☐ Other (Describe)

9. Does this project comply with the Wicks Law involving separate bidding? YES ☐ NO ☐

10. Name and Title of Requester

Signature

SEE PAGE TWO FOR LAWS RELATING TO PUBLIC WORK CONTRACTS

NEW YORK STATE DEPARTMENT OF LABOR
Bureau of Public Work - Debarment List

LIST OF EMPLOYERS INELIGIBLE TO BID ON OR BE AWARDED ANY PUBLIC WORK CONTRACT

Under Article 8 and Article 9 of the NYS Labor Law, a contractor, sub-contractor and/or its successor shall be debarred and ineligible to submit a bid on or be awarded any public work or public building service contract/sub-contract with the state, any municipal corporation or public body for a period of five (5) years from the date of debarment when:

- Two (2) final determinations have been rendered within any consecutive six-year (6) period determining that such contractor, sub-contractor and/or its successor has WILLFULLY failed to pay the prevailing wage and/or supplements;
- One (1) final determination involves falsification of payroll records or the kickback of wages and/or supplements.

The agency issuing the determination and providing the information, is denoted under the heading 'Fiscal Officer'. DOL = New York State Department of Labor; NYC = New York City Comptroller's Office; AG = New York State Attorney General's Office; DA = County District Attorney's Office.

Debarment Database: To search for contractors, sub-contractors and/or their successors debarred from bidding or being awarded any public work contract or subcontract under NYS Labor Law Articles 8 and 9, or under NYS Workers' Compensation Law Section 141-b, access the database at this link: https://apps.labor.ny.gov/EDList/searchPage.do

For inquiries please call 518-457-5589.

NYSDOL Bureau of Public Work Debarment List 04/04/2025

Article 8

AGENCY	Fiscal Officer	FEIN	EMPLOYER NAME	EMPLOYER DBA NAME	ADDRESS	DEBARMENT START DATE	DEBARMENT END DATE
DOL	DOL	*****5754	0369 CONTRACTORS, LLC		515 WEST AVE UNIT PH 13NORWALK CT 06850	05/12/2021	05/12/2026
DOL	DOL	*****5784	A.J.M. TRUCKING, INC.		PO BOX 2064 MONROE NY 10950	02/12/2024	02/12/2029
DOL	DOL		AKHLAQ OULAKH		4307 28TH AVE ASTORIA NY 11103	10/11/2024	10/11/2029
DOL	NYC		ALL COUNTY SEWER & DRAIN, INC.		7 GREENFIELD DR WARWICK NY 10990	03/25/2022	03/25/2027
DOL	DOL	*****8387	AMERICAN PAVING & MASONRY, CORP.		8 FOREST AVE GLEN COVE NY 11542	05/24/2024	05/24/2029
DOL	DOL	*****8654	AMERICAN PAVING, INC.		8 FORREST AVE. GLEN COVE NY 11542	05/24/2024	05/24/2029
DOL	NYC		AMJED PARVEZ		401 HANOVER AVENUE STATEN ISLAND NY 10304	01/11/2021	01/11/2026
DOL	DOL		ANGELO F COKER		2610 SOUTH SALINA STREET SUITE 14SYRACUSE NY 13205	09/17/2020	09/17/2025
DOL	DOL		ANGELO GARCIA		515 WEST AVE UNIT PH 13NORWALK CT 06850	05/12/2021	05/12/2026
DOL	DOL		ANGELO STANCO		8 FOREST AVE. GLEN COVE NY 11542	05/24/2024	05/24/2029
DOL	DOL		ANGELO TONDO		449 WEST MOMBSHA ROAD MONROE NY 10950	06/06/2022	06/06/2027
DOL	DOL	*****4231	ANKER'S ELECTRIC SERVICE, INC.		10 SOUTH 5TH ST LOCUST VALLEY NY 11560	09/26/2022	09/26/2027
DOL	DOL		ANTHONY MONGELLI		PO BOX 2064 MONROE NY 10950	02/12/2024	02/12/2029
DOL	NYC		ARADCO CONSTRUCTION CORP		115-46 132RD ST SOUTH OZONE PARK NY 11420	09/17/2020	09/17/2025
DOL	NYC		AVM CONSTRUCTION CORP		117-72 123RD ST SOUTH OZONE PARK NY 11420	09/17/2020	09/17/2025
DOL	NYC		AZIDABEGUM		524 MCDONALD AVENUE BROOKLYN NY 11218	09/17/2020	09/17/2025
DOL	DOL	*****8421	B & B DRYWALL, INC		206 WARREN AVE APT 1WHITE PLAINS NY 10603	12/14/2021	12/14/2026
DOL	DOL		B&L RENOVATION CO.		618 OCEAN PARKWAY APT A6BROOKLYN NY 11230	09/17/2020	09/17/2025
DOL	NYC	*****2113	BHW CONTRACTING, INC.		401 HANOVER AVENUE STATEN ISLAND NY 10304	01/11/2021	01/11/2026
DOL	DOL	*****5078	BLACK RIVER TREE REMOVAL, LLC		29807 ANDREWS ROAD BLACK RIVER NY 13032	10/17/2023	10/17/2028
DOL	DOL		BRADLEY J SCHUKA		4 BROTHERS ROAD WAPPINGERS FALLS NY 12590	10/20/2020	10/20/2025
DOL	DOL	*****9383	C.C. PAVING AND EXCAVATING, INC.		2610 SOUTH SALINA ST SUITE 12SYRACUSE NY 13205	09/17/2020	09/17/2025
DOL	DOL	*****5161	CALADRI DEVELOPMENT CORP.		1223 PARK ST. PEEKSKILL NY 10566	05/17/2021	05/17/2026
DOL	DOL	*****3391	CALI ENTERPRISES, INC.		1223 PARK STREET PEEKSKILL NY 10566	05/17/2021	05/17/2026
DOL	DOL	*****4155	CASA BUILDERS, INC.	FRIEDLANDER CONSTRUCTION	64 N PUTT CONNERS ROAD NEW PALTZ NY 12561	05/10/2023	05/10/2028
DOL	AG	*****7247	CENTURY CONCRETE CORP		2375 RAYNOR ST RONKONKOMA NY 11779	08/04/2021	08/04/2026
DOL	DOL	*****0026	CHANTICLEER CONSTRUCTION LLC		4 BROTHERS ROAD WAPPINGERS FALLS NY 12590	10/20/2020	10/20/2025
DOL	NYC	*****2117	CHARAN ELECTRICAL ENTERPRISES		9-11 40TH AVENUE LONG ISLAND CITY NY 11101	09/26/2023	09/26/2028
DOL	DOL		CHRISTOPHER GRECO		26 NORTH MYRTLE AVENUE SPRING VALLEY NY 10956	02/18/2021	02/18/2026
DOL	DOL	*****2281	CORRAO TRUCKING, INC.		PO BOX 393 NANUET NY 10954	09/17/2024	09/17/2029
DOL	DOL		CRAIG JOHANSEN		10 SOUTH 5TH ST LOCUST VALLEY NY 11560	09/26/2022	09/26/2027
DOL	DOL	*****3228	CROSS-COUNTY LANDSCAPING AND TREE SERVICE, INC.	ROCKLAND TREE SERVICE	26 NORTH MYRTLE AVENUE SPRING VALLEY NY 10956	02/18/2021	02/18/2026
DOL	DOL	*****7619	DANCO CONSTRUCTION UNLIMITED INC.		485 RAFT AVENUE HOLBROOK NY 11741	10/19/2021	10/19/2026
DOL	DOL		DANIEL ROBERT MCNALLY		7 GREENFIELD DRIVE WARWICK NY 10990	03/25/2022	03/25/2027

DOL	DOL		DARIAN L COKER		2610 SOUTH SALINA ST SUITE 2CSYRACUSE NY 13205	09/17/2020	09/17/2025
DOL	DOL		DARWIN PEGUESE		6400 BALTIMORE NATIONAL SUITE 602CANTONSVILLE NY 21228	10/24/2024	10/24/2029
DOL	DOL		DAVID FRIEDLANDER		64 NORTH PUTT CORNERS RD NEW PALTZ NY 12561	05/10/2023	05/10/2028
DOL	DOL		DINA TAYLOR		64 N PUTT CONNERS RD NEW PALTZ NY 12561	05/10/2023	05/10/2028
DOL	AG		EDWIN HUTZLER		23 NORTH HOWELLS RD BELLPORT NY 11713	08/04/2021	08/04/2026
DOL	DA		EDWIN HUTZLER		2375 RAYNOR STREET RONKONKOMA NY 11779	08/04/2021	08/04/2026
DOL	DOL	*****0780	EMES HEATING & PLUMBING CONTR		5 EMES LANE MONSEY NY 10952	01/20/2002	01/20/3002
DOL	DOL		EMIL KISZKO		84 DIAMOND ST BROOKLYN NY 11222	07/18/2024	07/18/2029
DOL	DOL	*****3298	EMJACK CONSTRUCTION CORP.		84 DIAMOND ST BROOKLYN NY 11222	07/18/2024	07/18/2029
DOL	DOL	*****3298	EMJACK CONSTRUCTION LLC		4192 SIR ANDREW CIRCLE DOYLESTOWN PA 18902	07/18/2024	07/18/2029
DOL	DOL		EUGENIUSZ "GINO" KUCHAR		195 KINGSLAND AVE BROOKLYN NY 11222	12/22/2023	12/22/2028
DOL	DA		FREDERICK HUTZLER		2375 RAYNOR STREET RONKONKOMA NY 11779	08/04/2021	08/04/2026
DOL	DOL	*****2998	G.E.M. AMERICAN CONSTRUCTION CORP.		195 KINGSLAND AVE BROOKLYN NY 11222	12/22/2023	12/22/2028
DOL	NYC		GAYATRI MANGRU		21 DAREWOOD LANE VALLEY STREAM NY 11581	09/17/2020	09/17/2025
DOL	DA		GEORGE LUCEY		150 KINGS STREET BROOKLYN NY 11231	01/19/1998	01/19/2998
DOL	DA		GIOVANNA TRAVALJA		3735 9TH ST LONG ISLAND CITY NY 11101	01/05/2023	01/05/2028
DOL	DA		GIOVANNI NAPOLITANO		2501 BAYVIEW AVENUE WANTAGH NY 11793	02/21/2024	02/21/2029
DOL	DA	*****0213	GORILLA CONTRACTING GROUP, LLC		505 MANHATTAN AVE WEST BABYLON NY 11704	10/05/2023	10/05/2028
DOL	DA	*****4760	GTX CONSTRUCTION ASSOCIATES, CORP		2501 BAYVIEW AVE WANTAGH NY 11793	02/21/2024	02/21/2029
DOL	DOL		HERBERT CLEMEN		42 FOWLER AVENUE CORTLAND MANOR NY 10567	01/24/2023	01/24/2028
DOL	DOL		HERBERT CLEMEN		42 FOWLER AVENUE CORTLAND MANOR NY 10567	10/25/2022	10/25/2027
DOL	DOL	*****2397	ISLAND BREEZE MARINE, INC.		6400 BALTIMORE NATIONAL CANTONSVILLE MD 21228	10/24/2024	10/24/2029
DOL	DOL	*****9211	J. WASE CONSTRUCTION CORP.		8545 RT 9W ATHENS NY 12015	03/09/2021	03/09/2026
DOL	DOL		J.M.J CONSTRUCTION		151 OSTRANDER AVENUE SYRACUSE NY 13205	11/21/2022	11/21/2027
DOL	DOL		J.R. NELSON CONSTRUCTION		531 THIRD STREET ALBANY NY 12206	11/07/2023	11/07/2028
DOL	DOL		J.R. NELSON CONSTRUCTION		531 THIRD STREET ALBANY NY 12206	12/22/2022	12/22/2027
DOL	DOL		J,R. NELSON CONSTRUCTION		531 THIRD STREET ALBANY NY 12206	10/25/2022	10/25/2027
DOL	DOL		J.R. NELSON, LLC		531 THIRD STREET ALBANY NY 12206	12/22/2022	12/22/2027
DOL	DOL		J.R. NELSON, LLC		531 THIRD STREET ALBANY NY 12206	11/07/2023	11/07/2028
DOL	DOL		J.R. NELSON, LLC		531 THIRD STREET ALBANY NY 12206	10/25/2022	10/25/2027
DOL	DOL		J.R.N COMPANIES, LLC		531 THIRD STREET ALBANY NY 12206	12/12/2022	12/12/2027
DOL	DOL		J.R.N COMPANIES, LLC		531 THIRD STREET ALBANY NY 12206	11/07/2023	11/07/2028
DOL	DOL		J.R.N COMPANIES, LLC		531 THIRD STREET ALBANY NY 12206	10/25/2022	10/25/2027
DOL	DOL	*****1147	J.R.N. CONSTRUCTION, LLC		531 THIRD ST ALBANY NY 12206	11/07/2023	11/07/2028
DOL	DOL	*****1147	J.R.N. CONSTRUCTION, LLC		531 THIRD ST ALBANY NY 12206	12/22/2022	12/22/2027
DOL	DOL	*****1147	J.R.N. CONSTRUCTION, LLC		531 THIRD ST ALBANY NY 12206	10/25/2022	10/25/2027
DOL	DOL		JAMES J. BAKER		7901 GEE ROAD CANASTOTA NY 13032	08/17/2021	08/17/2026

DOL	DOL		JASON P. RACE		3469 STATE RT. 69 PERISH NY 13131	09/29/2021	09/29/2026
DOL	DOL		JASON P. RACE		3469 STATE RT. 69 PERISH NY 13131	02/09/2022	02/09/2027
DOL	DOL		JASON P. RACE		3469 STATE RT. 69 PERISH NY 13131	11/15/2022	11/15/2027
DOL	DOL		JASON P. RACE		3469 STATE RT. 69 PERISH NY 13131	03/01/2022	03/01/2027
DOL	DOL	*****7993	JBS DIRT, INC.		7901 GEE ROAD CANASTOTA NY 13032	08/17/2021	08/17/2026
DOL	DOL	*****2435	JEFFEL D. JOHNSON	JMJ7 AND SON	5553 CAIRNSTRAIL CLAY NY 13041	11/21/2022	11/21/2027
DOL	DOL		JEFFEL JOHNSON ELITE CARPENTER REMODEL AND CONSTRUCTION		C2 EVERGREEN CIRCLE LIVERPOOL NY 13090	11/21/2022	11/21/2027
DOL	DOL	*****2435	JEFFREY M. JOHNSON	JMJ7 AND SON	5553 CAIRNS TRAIL CLAY NY 13041	11/21/2022	11/21/2027
DOL	DOL		JIM PLAUGHER		17613 SANTE FE LINE ROAD WAYNEFIELD OH 45896	07/16/2021	07/16/2026
DOL	DOL		JMJ7 & SON CONSTRUCTION, LLC		5553 CAIRNS TRAIL LIVERPOOL NY 13041	11/21/2022	11/21/2027
DOL	DOL		JMJ7 AND SONS CONTRACTORS		5553 CAIRNS TRAIL CLAY NY 13041	11/21/2022	11/21/2027
DOL	DOL		JMJ7 CONTRACTORS		7014 13TH AVENUE BROOKLYN NY 11228	11/21/2022	11/21/2027
DOL	DOL		JMJ7 CONTRACTORS AND SONS		5553 CAIRNS TRAIL CLAY NY 13041	11/21/2022	11/21/2027
DOL	DOL		JMJ7 CONTRACTORS, LLC		5553 CAIRNS TRAIL CLAY NY 13041	11/21/2022	11/21/2027
DOL	DOL		JOHN MARKOVIC		47 MANDON TERRACE HAWTHORN NJ 07506	03/29/2021	03/29/2026
DOL	DOL		JOHN WASE		8545 RT 9W ATHENS NY 12015	03/09/2021	03/09/2026
DOL	DOL		JORGE RAMOS		8970 MIKE GARCIA DR MANASSAS VA 20109	07/16/2021	07/16/2026
DOL	DOL		JOSEPH HALL		937 US ROUTE 11 CENTRAL SQUARE NY 13036	10/21/2024	10/21/2029
DOL	DOL	*****2271	JOSEPH HALL COMPANIES LLC		937 US ROUTE 11 CENTRAL SQUARE NY 13036	10/21/2024	10/21/2029
DOL	DOL		JOSEPH K. SALERNO		1010 TILDEN AVE UTICA NY 13501	07/24/2023	07/24/2028
DOL	DOL		JOSEPH K. SALERNO II		1010 TILDEN AVE UTICA NY 13501	07/24/2023	07/24/2028
DOL	DOL	*****5116	JP RACE PAINTING, INC. T/A RACE PAINTING		3469 STATE RT. 69 PERISH NY 13131	02/09/2022	02/09/2027
DOL	DOL	*****5116	JP RACE PAINTING, INC. T/A RACE PAINTING		3469 STATE RT. 69 PERISH NY 13131	11/15/2022	11/15/2027
DOL	DOL	*****5116	JP RACE PAINTING, INC. T/A RACE PAINTING		3469 STATE RT. 69 PERISH NY 13131	09/29/2021	09/29/2026
DOL	DOL	*****5116	JP RACE PAINTING, INC. T/A RACE PAINTING		3469 STATE RT. 69 PERISH NY 13131	03/01/2022	03/01/2027
DOL	DOL	*****5116	JP RACE PAINTING, INC. T/A RACE PAINTING		3469 STATE RT. 69 PERISH NY 13131	03/01/2022	03/01/2027
DOL	DOL		JRN CONSTRUCTION CO, LLC		1024 BROADWAY ALBANY NY 12204	11/07/2023	11/07/2028
DOL	DOL	*****1147	JRN CONSTRUCTION, LLC		531 THIRD STREET ALBANY NY 12206	10/25/2022	10/25/2027
DOL	DOL	*****1147	JRN CONSTRUCTION, LLC		531 THIRD STREET ALBANY NY 12206	12/22/2022	12/22/2027
DOL	DOL	*****1147	JRN CONSTRUCTION, LLC		531 THIRD STREET ALBANY NY 12206	11/07/2023	11/07/2028
DOL	DOL		JRN PAVING, LLC		531 THIRD STREET ALBANY NY 12206	10/25/2022	10/25/2027
DOL	DOL		JRN PAVING, LLC		531 THIRD STREET ALBANY NY 12206	12/22/2022	12/22/2027
DOL	DOL		JRN PAVING, LLC		531 THIRD STREET ALBANY NY 12206	11/07/2023	11/07/2028
DOL	DOL		JULIUS AND GITA BEHREND		5 EMES LANE MONSEY NY 10952	11/20/2002	11/20/3002
DOL	DOL		KARIN MANGIN		796 PHELPS ROAD FRANKLIN LAKES NJ 07417	12/01/2020	12/01/2025
DOL	DOL		KATE E. CONNOR		7088 INTERSTATE ISLAND RD SYRACUSE NY 13209	03/31/2021	03/31/2026

DOL	DOL		KEAN INDUSTRIES, LLC		2345 RT. 52 SUITE 2NHOPEWELL JUNCTION NY 12533	12/18/2023	12/18/2028
DOL	DOL	*****2959	KELC DEVELOPMENT, INC		7088 INTERSTATE ISLAND RD SYRACUSE NY 13209	03/31/2021	03/31/2026
DOL	DOL		KEVIN FUNEZ URBINA A/K/A KEVIN FUNEZ		1009 LYNDALE AVE TRENTON NJ 08629	12/16/2024	12/16/2029
DOL	DOL		KIMBERLY F. BAKER		7901 GEE ROAD CANASTOTA NY 13032	08/17/2021	08/17/2026
DOL	DOL	*****8760	KJ&J CONSTRUCTION, LLC		1009 LYNDALE AVE TRENTON NJ 08629	12/16/2024	12/16/2029
DOL	DOL		KMA GROUP II, INC.		29-10 38TH AVENUE LONG ISLAND CITY NY 11101	10/11/2023	10/11/2028
DOL	DOL	*****1833	KMA GROUP INC.		29-10 38TH AVENUE LONG ISLAND CITY NY 11101	10/11/2023	10/11/2028
DOL	DOL		KMA INSULATION, INC.		29-10 38TH AVENUE LONG ISLAND CITY NY 11101	10/11/2023	10/11/2028
DOL	DOL		KRIN HEINEMANN		2345 ROUTE 52, SUITE 2N HOPEWELL JUNCTION NY 12533	12/18/2023	12/18/2028
DOL	NYC		KULWANT S. DEOL		9-11 40TH AVENUE LONG ISLAND CITY NY 11101	09/26/2023	09/26/2028
DOL	DA	*****8816	LAKE CONSTRUCTION AND DEVELOPMENT CORPORATION		150 KINGS STREET BROOKLYN NY 11231	08/19/1998	08/19/2998
DOL	DOL		LEROY E. NELSON JR		531 THIRD ST ALBANY NY 12206	10/25/2022	10/25/2027
DOL	DOL		LEROY E. NELSON JR		531 THIRD ST ALBANY NY 12206	12/22/2022	12/22/2027
DOL	DOL		LEROY E. NELSON JR		531 THIRD ST ALBANY NY 12206	11/07/2023	11/07/2028
DOL	DOL	*****3716	LIGHTNIN ELECTRIC INC.		3418 NORTHERN BLVD SUITE 5-27LONG ISLAND CITY NY 11101	12/13/2024	12/13/2029
DOL	AG	*****3291	LINTECH ELECTRIC, INC.		3006 TILDEN AVE BROOKLYN NY 11226	02/16/2022	02/16/2027
DOL	DOL		LOUIS A. CALICCHIA		1223 PARK ST. PEEKSKILL NY 10566	05/17/2021	05/17/2026
DOL	DOL	*****2196	MAINSTREAM SPECIALTIES, INC.		11 OLD TOWN RD SELKIRK NY 12158	02/02/2021	02/02/2026
DOL	DA		MANUEL P TOBIO		150 KINGS STREET BROOKLYN NY 14444	08/19/1998	08/19/2998
DOL	DA		MANUEL TOBIO		150 KINGS STREET BROOKLYN NY 11231	08/19/1998	08/19/2998
DOL	DOL		MAQSOOD AHMAD		618 OCEAN PKWY BROOKLYN NY 11230	09/17/2020	09/17/2025
DOL	DOL	*****1320	MJC MASON CONTRACTING, INC.		42 FOWLER AVENUE CORTLAND MANOR NY 10567	10/25/2022	10/25/2027
DOL	DOL	*****1320	MJC MASON CONTRACTING, INC.		42 FOWLER AVENUE CORTLAND MANOR NY 10567	01/24/2023	01/24/2028
DOL	NYC		MUHAMMED A. HASHEM		524 MCDONALD AVENUE BROOKLYN NY 11218	09/17/2020	09/17/2025
DOL	DOL	*****7790	NATIONAL BUILDING & RESTORATION CORP		1010 TILDEN AVE UTICA NY 13501	07/24/2023	07/24/2028
DOL	DOL	*****1797	NATIONAL CONSTRUCTION SERVICES, INC		1010 TILDEN AVE UTICA NY 13501	07/24/2023	07/24/2028
DOL	NYC		NAVIT SINGH		402 JERICHO TURNPIKE NEW HYDE PARK NY 11040	08/10/2022	08/10/2027
DOL	DOL		NELCO CONTRACTING, LLC		1024 BROADWAY ALBANY NY 12204	11/07/2023	11/07/2028
DOL	DA		NICHOLAS T. ANALITIS		505 MANHATTAN AVE WEST BABYLON NY 11704	10/05/2023	10/05/2028
DOL	DOL		NICHOLE E. FRASER A/K/A NICHOLE RACE		3469 STATE RT. 69 PERISH NY 13131	03/01/2022	03/01/2027
DOL	DOL		NICHOLE E. FRASER A/K/A NICHOLE RACE		3469 STATE RT. 69 PERISH NY 13131	11/15/2022	11/15/2027
DOL	DOL		NICHOLE E. FRASER A/K/A NICHOLE RACE		3469 STATE RT. 69 PERISH NY 13131	09/29/2021	09/29/2026
DOL	DOL		NICHOLE E. FRASER A/K/A NICHOLE RACE		3469 STATE RT. 69 PERISH NY 13131	02/09/2022	02/09/2027
DOL	DOL	*****7429	NICOLAE I. BARBIR	BESTUCCO CONSTRUCTI ON, INC.	444 SCHANTZ ROAD ALLENTOWN PA 18104	09/17/2020	09/17/2025
DOL	DOL		NIKOLA NTONI		3418 NORTHERN BLVD SUITE 5-27LONG ISLAND CITY NY 11101	12/13/2024	12/13/2029

NYSDOL Bureau of Public Work Debarment List 04/04/2025

Article 8

DOL	NYC	*****5643	NYC LINE CONTRACTORS, INC.		402 JERICHO TURNPIKE NEW HYDE PARK NY 11040	08/10/2022	08/10/2027
DOL	DOL		PATRICK PENNACCHIO		2345 RT. 52 SUITE 2NHOPEWELL JUNCTION NY 12533	12/18/2023	12/18/2028
DOL	DOL		PATRICK PENNACCHIO		2345 RT. 52 SUITE 2NHOPEWELL JUNCTION NY 12533	12/18/2023	12/18/2028
DOL	DOL		PAULINE CHAHALES		935 S LAKE BLVD MAHOPAC NY 10541	03/02/2021	03/02/2026
DOL	DOL		PETER STEVENS		11 OLD TOWN ROAD SELKIRK NY 12158	02/02/2021	02/02/2026
DOL	DOL		PETER STEVENS		8269 21ST ST BELLEROSE NY 11426	12/22/2022	12/22/2027
DOL	DOL	*****4168	PHANTOM CONSTRUCTION CORP.		95-27 116TH STREET QUEENS NY 11419	07/12/2024	07/12/2029
DOL	DOL	*****4168	PHANTOM CONSTRUCTION CORP.		95-27 116TH STREET QUEENS NY 11419	05/28/2024	05/28/2029
DOL	NYC		RASHEL CONSTRUCTION CORP		524 MCDONALD AVENUE BROOKLYN NY 11218	09/17/2020	09/17/2025
DOL	DOL	*****2633	RAW POWER ELECTRIC CORP.		3 PARK CIRCLE MIDDLETOWN NY 10940	07/11/2022	07/11/2027
DOL	DA	*****7559	REGAL CONTRACTING INC.		24 WOODBINE AVE NORTHPORT NY 11768	10/01/2020	10/01/2025
DOL	DOL		ROBBYE BISSESAR		89-51 SPRINGFIELD BLVD QUEENS VILLAGE NY 11427	01/11/2003	01/11/3003
DOL	DOL		ROMEO WARREN		161 ROBYN RD MONROE NY 10950	07/11/2022	07/11/2027
DOL	DOL	*****4772	RWLOBDELL CONSTRUCTION LLC		635 WEST DRYDEN ROAD FREEVILLE NY 13068	01/31/2025	01/31/2030
DOL	DOL	*****7172	RZ & AL INC.		198 RIDGE AVENUE VALLEY STREAM NY 11581	06/06/2022	06/06/2027
DOL	DOL		SAL FRESINA MASONRY CONTRACTORS, INC.		1935 TEALL AVENUE SYRACUSE NY 13206	07/16/2021	07/16/2026
DOL	DOL		SAL MASONRY CONTRACTORS, INC.		(SEE COMMENTS) SYRACUSE NY 13202	07/16/2021	07/16/2026
DOL	DOL	*****9874	SALFREE ENTERPRISES INC		P.O BOX 14 2821 GARDNER RDPOMPEI NY 13138	07/16/2021	07/16/2026
DOL	DOL		SALVATORE A FRESINA A/K/A SAM FRESINA		107 FACTORY AVE P.O BOX 11070SYRACUSE NY 13218	07/16/2021	07/16/2026
DOL	DOL		SAM FRESINA		107 FACTORY AVE P.O BOX 11070SYRACUSE NY 13218	07/16/2021	07/16/2026
DOL	DA	*****0476	SAMCO ELECTRIC CORP.		3735 9TH ST LONG ISLAND CITY NY 11101	01/05/2023	01/05/2028
DOL	DA		SILVANO TRAVALJA		3735 9TH ST LONG ISLAND CITY NY 11101	01/05/2023	01/05/2028
DOL	DOL	*****0440	SOLAR GUYS INC.		8970 MIKE GARCIA DR MANASSAS VA 20109	07/16/2021	07/16/2026
DOL	NYC		SOMATIE RAMSUNAHAI		115-46 132ND ST SOUTH OZONE PARK NY 11420	09/17/2020	09/17/2025
DOL	NYC	*****3661	SPANIER BUILDING MAINTENANCE CORP		200 OAK DRIVE SYOSSET NY 11791	03/14/2022	03/14/2027
DOL	DOL		STANADOS KALOGELAS		485 RAFT AVENUE HOLBROOK NY 11741	10/19/2021	10/19/2026
DOL	DOL	*****3496	STAR INTERNATIONAL INC		89-51 SPRINGFIELD BLVD QUEENS VILLAGE NY 11427	08/11/2003	08/11/3003
DOL	DOL	*****9528	STEEL-IT, LLC.		17613 SANTE FE LINE ROAD WAYNESFIELD OH 45896	07/16/2021	07/16/2026
DOL	DOL	*****3800	SUBURBAN RESTORATION CO. INC.		5-10 BANTA PLACE FAIR LAWN PLACE NJ 07410	03/29/2021	03/29/2026
DOL	DOL	*****9150	SURGE INC.		8269 21ST STREET BELLEROSE NY 11426	12/22/2022	12/22/2027
DOL	DOL		SYED MUHAMMAD S. JAFRI A/K/A SHARRUKH JAFRI		4307 28TH AVE ASTORIA NY 11103	10/11/2024	10/11/2029
DOL	DOL		SYED RAZA		198 RIDGE AVENUE NY 11581	06/06/2022	06/06/2027
DOL	DOL		TARLOK SINGH		95-27 116TH STREET QUEENS NY 11419	05/28/2024	05/28/2029
DOL	DOL		TARLOK SINGH		95-27 116TH STREET QUEENS NY 11419	07/12/2024	07/12/2029

NYSDOL Bureau of Public Work Debarment List 04/04/2025

Article 8

DOL	DOL	*****9733	TERSAL CONSTRUCTION SERVICES INC		107 FACTORY AVE P.O BOX 11070SYRACUSE NY 13208	07/16/2021	07/16/2026
DOL	DOL		TERSAL CONTRACTORS, INC.		221 GARDNER RD P.O BOX 14POMPEI NY 13138	07/16/2021	07/16/2026
DOL	DOL		TERSAL DEVELOPMENT CORP.		1935 TEALL AVENUE SYRACUSE NY 13206	07/16/2021	07/16/2026
DOL	DOL	*****5766	THE COKER CORPORATION	COKER CORPORATIO N	2610 SOUTH SALINA ST SUITE 14SYRACUSE NY 13205	09/17/2020	09/17/2025
DOL	DOL	*****2426	THE MATRUKH GROUP, INC.		4307 28TH AVE PO BOX 9082ASTORIA NY 11103	10/11/2024	10/11/2029
DOL	DOL		THOMAS LOBDELL		635 WEST DRYDEN ROAD FREEVILLE NY 13068	01/31/2025	01/31/2030
DOL	DOL		TIMOTHY PERCY		29807 ANDREWS ROAD BLACK RIVER NY 13612	10/17/2023	10/17/2028
DOL	DA	*****1050	TRI STATE CONSTRUCTION OF NY CORP.		50-39 175TH PLACE FRESH MEADOWS NY 11365	03/28/2022	03/28/2027
DOL	DA	*****4106	TRIPLE H CONCRETE CORP		2375 RAYNOR STREET RONKONKOMA NY 11779	08/04/2021	08/04/2026
DOL	DOL	*****8210	UPSTATE CONCRETE & MASONRY CONTRACTING CO INC		449 WEST MOMBSHA ROAD MONROE NY 10950	06/06/2022	06/06/2027
DOL	DOL	*****6418	VALHALLA CONSTRUCTION, LLC.		796 PHLEPS ROAD FRANKLIN LAKES NJ 07417	12/01/2020	12/01/2025
DOL	NYC	*****2426	VICKRAM MANGRU	VICK CONSTRUCTI ON	21 DAREWOOD LANE VALLEY STREAM NY 11581	09/17/2020	09/17/2025
DOL	NYC		VICKRAM MANGRU		21 DAREWOOD LANE VALLEY STREAM NY 11581	09/17/2020	09/17/2025
DOL	DOL		VINCENT CORRAO		PO BOX 393 NANUET NY 10954	09/17/2024	09/17/2029
DOL	DOL	*****8266	WILLIAM CHRIS MCCLENDON	MCCLENDON ASPHALT PAVING	1646 FALLS STREET NIAGARA FALLS NY 14303	05/01/2023	05/01/2028
DOL	DOL		WILLIAM CHRIS MCCLENDON		1646 FALLS STREET NIAGARA FALLS NY 14303	05/01/2023	05/01/2028
DOL	DOL		WILLIAM G. PROERFRIEDT		85 SPRUCEWOOD ROAD WEST BABYLON NY 11704	01/19/2021	01/19/2026
DOL	DOL	*****5924	WILLIAM G. PROPHY, LLC	WGP CONTRACTIN G, INC.	54 PENTAQUIT AVE BAYSHORE NY 11706	01/19/2021	01/19/2026
DOL	DOL		WILLIAM SCRIVENS		4192 SIR ANDREW CIRCLE DOYELSTOWN PA 18902	07/18/2024	07/18/2029
DOL	DOL		XENOFON EFTHIMIADIS		29-10 38TH AVENUE LONG ISLAND CITY NY 11101	10/11/2023	10/11/2028

BID BOND (PENAL SUM FORM)

Bidder Name: Address *(principal place of business)*:	**Surety** Name: Address *(principal place of business)*:
Owner Name: **Town of New Windsor** Address *(principal place of business)*: **555 Union Avenue** **New Windsor, NY 12553**	**Bid** Project *(name and location)*: **Town of New Windsor** **Caesars Lane Wastewater Treatment Plant Expansion Phase 2 Project** Bid Due Date:
Bond Penal Sum: Date of Bond:	
Surety and Bidder, intending to be legally bound hereby, subject to the terms set forth in this Bid Bond, do each cause this Bid Bond to be duly executed by an authorized officer, agent, or representative.	
Bidder *(Full formal name of Bidder)* By: _____ *(Signature)* Name: _____ *(Printed or typed)* Title: _____ Attest: _____ *(Signature)* Name: _____ *(Printed or typed)* Title:	Surety *(Full formal name of Surety) (corporate seal)* By: _____ *(Signature) (Attach Power of Attorney)* Name: _____ *(Printed or typed)* Title: _____ Attest: _____ *(Signature)* Name: _____ *(Printed or typed)* Title:
Notes: (1) Note: Addresses are to be used for giving any required notice. (2) Provide execution by any additional parties, such as joint venturers, if necessary.	

EJCDC® C-430, Bid Bond (Penal Sum Form).
Copyright© 2018 National Society of Professional Engineers, American Council of Engineering Companies, and American Society of Civil Engineers. All rights reserved.

1. Bidder and Surety, jointly and severally, bind themselves, their heirs, executors, administrators, successors, and assigns to pay to Owner upon default of Bidder the penal sum set forth on the face of this Bond. Payment of the penal sum is the extent of Bidder's and Surety's liability. Recovery of such penal sum under the terms of this Bond will be Owner's sole and exclusive remedy upon default of Bidder.
2. Default of Bidder occurs upon the failure of Bidder to deliver within the time required by the Bidding Documents (or any extension thereof agreed to in writing by Owner) the executed Agreement required by the Bidding Documents and any performance and payment bonds required by the Bidding Documents.
3. This obligation will be null and void if:
    3.1. Owner accepts Bidder's Bid and Bidder delivers within the time required by the Bidding Documents (or any extension thereof agreed to in writing by Owner) the executed Agreement required by the Bidding Documents and any performance and payment bonds required by the Bidding Documents, or
    3.2. All Bids are rejected by Owner, or
    3.3. Owner fails to issue a Notice of Award to Bidder within the time specified in the Bidding Documents (or any extension thereof agreed to in writing by Bidder and, if applicable, consented to by Surety when required by Paragraph 5 hereof).
4. Payment under this Bond will be due and payable upon default of Bidder and within 30 calendar days after receipt by Bidder and Surety of written notice of default from Owner, which notice will be given with reasonable promptness, identifying this Bond and the Project and including a statement of the amount due.
5. Surety waives notice of any and all defenses based on or arising out of any time extension to issue Notice of Award agreed to in writing by Owner and Bidder, provided that the total time for issuing Notice of Award including extensions does not in the aggregate exceed 120 days from the Bid due date without Surety's written consent.
6. No suit or action will be commenced under this Bond prior to 30 calendar days after the notice of default required in Paragraph 4 above is received by Bidder and Surety, and in no case later than one year after the Bid due date.
7. Any suit or action under this Bond will be commenced only in a court of competent jurisdiction located in the state in which the Project is located.
8. Notices required hereunder must be in writing and sent to Bidder and Surety at their respective addresses shown on the face of this Bond. Such notices may be sent by personal delivery, commercial courier, or by United States Postal Service registered or certified mail, return receipt requested, postage pre-paid, and will be deemed to be effective upon receipt by the party concerned.
9. Surety shall cause to be attached to this Bond a current and effective Power of Attorney evidencing the authority of the officer, agent, or representative who executed this Bond on behalf of Surety to execute, seal, and deliver such Bond and bind the Surety thereby.
10. This Bond is intended to conform to all applicable statutory requirements. Any applicable requirement of any applicable statute that has been omitted from this Bond will be deemed to be included herein as if set forth at length. If any provision of this Bond conflicts with any applicable statute, then the provision of said statute governs and the remainder of this Bond that is not in conflict therewith continues in full force and effect.
11. The term "Bid" as used herein includes a Bid, offer, or proposal as applicable.

Copyright© 2018 National Society of Professional Engineers, American Council of Engineering Companies, and American Society of Civil Engineers. All rights reserved.

QUALIFICATION STATEMENT

ARTICLE 1—GENERAL INFORMATION

1.01 Provide contact information for the Business:

Legal Name of Business:			
Corporate Office			
Name:		Phone number:	
Title:		Email address:	
Business address of corporate office:			
Local Office			
Name:		Phone number:	
Title:		Email address:	
Business address of local office:			

1.02 Provide information on the Business's organizational structure:

Form of Business:	☐ Sole Proprietorship ☐ Partnership ☐ Corporation		
☐ Limited Liability Company ☐ Joint Venture comprised of the following companies:			
	1.		
	2.		
	3.		
Provide a separate Qualification Statement for each Joint Venturer.			
Date Business was formed:		State in which Business was formed:	
Is this Business authorized to operate in the Project location?	☐ Yes ☐ No ☐ Pending		

1.03 Identify all businesses that own Business in whole or in part (25% or greater), or that are wholly or partly (25% or greater) owned by Business:

Name of business:		Affiliation:	
Address:			
Name of business:		Affiliation:	
Address:			
Name of business:		Affiliation:	
Address:			

Copyright© 2018 National Society of Professional Engineers, American Council of Engineering Companies, and American Society of Civil Engineers. All rights reserved.

1.04 Provide information regarding the Business's officers, partners, and limits of authority.

Name:		Title:	
Authorized to sign contracts: ☐ Yes ☐ No		Limit of Authority:	$
Name:		Title:	
Authorized to sign contracts: ☐ Yes ☐ No		Limit of Authority:	$
Name:		Title:	
Authorized to sign contracts: ☐ Yes ☐ No		Limit of Authority:	$
Name:		Title:	

ARTICLE 2—LICENSING

2.01 Provide information regarding licensure for Business:

Name of License:			
Licensing Agency:			
License No:		Expiration Date:	
Name of License:			
Licensing Agency:			
License No:		Expiration Date:	

ARTICLE 3—DIVERSE BUSINESS CERTIFICATIONS

3.01 Provide information regarding Business's Diverse Business Certification, if any. Provide evidence of current certification.

Certification	Certifying Agency	Certification Date
☐ Disadvantaged Business Enterprise		
☐ Minority Business Enterprise		
☐ Woman-Owned Business Enterprise		
☐ Small Business Enterprise		
☐ Disabled Business Enterprise		
☐ Veteran-Owned Business Enterprise		
☐ Service-Disabled Veteran-Owned Business		
☐ HUBZone Business (Historically Underutilized) Business		
☐ Other		
☐ None		

Copyright© 2018 National Society of Professional Engineers, American Council of Engineering Companies, and American Society of Civil Engineers. All rights reserved.

ARTICLE 4—SAFETY

4.01 Provide information regarding Business's safety organization and safety performance.

Name of Business's Safety Officer:		
Safety Certifications		
Certification Name	Issuing Agency	Expiration

4.02 Provide Worker's Compensation Insurance Experience Modification Rate (EMR), Total Recordable Frequency Rate (TRFR) for incidents, and Total Number of Recorded Manhours (MH) for the last 3 years and the EMR, TRFR, and MH history for the last 3 years of any proposed Subcontractor(s) that will provide Work valued at 10% or more of the Contract Price. Provide documentation of the EMR history for Business and Subcontractor(s).

Year									
Company	EMR	TRFR	MH	EMR	TRFR	MH	EMR	TRFR	MH

ARTICLE 5—FINANCIAL

5.01 Provide information regarding the Business's financial stability. Provide the most recent audited financial statement, and if such audited financial statement is not current, also provide the most current financial statement.

Financial Institution:		
Business address:		
Date of Business's most recent financial statement:		☐ Attached
Date of Business's most recent audited financial statement:		☐ Attached
Financial indicators from the most recent financial statement		
Contractor's Current Ratio (Current Assets ÷ Current Liabilities)		
Contractor's Quick Ratio ((Cash and Cash Equivalents + Accounts Receivable + Short Term Investments) ÷ Current Liabilities)		

Copyright© 2018 National Society of Professional Engineers, American Council of Engineering Companies, and American Society of Civil Engineers. All rights reserved.

ARTICLE 6—SURETY INFORMATION

6.01 Provide information regarding the surety company that will issue required bonds on behalf of the Business, including but not limited to performance and payment bonds.

Surety Name:			
Surety is a corporation organized and existing under the laws of the state of:			
Is surety authorized to provide surety bonds in the Project location?	☐ Yes ☐ No		
Is surety listed in "Companies Holding Certificates of Authority as Acceptable Sureties on Federal Bonds and as Acceptable Reinsuring Companies" published in Department Circular 570 (as amended) by the Bureau of the Fiscal Service, U.S. Department of the Treasury? ☐ Yes ☐ No			
Mailing Address (principal place of business):			
Physical Address (principal place of business):			
Phone (main):		Phone (claims):	

ARTICLE 7—INSURANCE

7.01 Provide information regarding Business's insurance company(s), including but not limited to its Commercial General Liability carrier. Provide information for each provider.

Name of insurance provider, and type of policy (CLE, auto, etc.):			
Insurance Provider		Type of Policy (Coverage Provided)	
Are providers licensed or authorized to issue policies in the Project location?		☐ Yes ☐ No	
Does provider have an A.M. Best Rating of A-VII or better?		☐ Yes ☐ No	
Mailing Address (principal place of business):			
Physical Address (principal place of business):			
Phone (main):		Phone (claims):	

Copyright© 2018 National Society of Professional Engineers, American Council of Engineering Companies, and American Society of Civil Engineers. All rights reserved.

ARTICLE 8—CONSTRUCTION EXPERIENCE

8.01 Provide information that will identify the overall size and capacity of the Business.

Average number of current full-time employees:	
Estimate of revenue for the current year:	
Estimate of revenue for the previous year:	

8.02 Provide information regarding the Business's previous contracting experience.

Years of experience with projects like the proposed project:				
As a general contractor:		As a joint venturer:		
Has Business, or a predecessor in interest, or an affiliate identified in Paragraph 1.03:				
Been disqualified as a bidder by any local, state, or federal agency within the last 5 years? ☐ Yes ☐ No				
Been barred from contracting by any local, state, or federal agency within the last 5 years? ☐ Yes ☐ No				
Been released from a bid in the past 5 years? ☐ Yes ☐ No				
Defaulted on a project or failed to complete any contract awarded to it? ☐ Yes ☐ No				
Refused to construct or refused to provide materials defined in the contract documents or in a change order? ☐ Yes ☐ No				
Been a party to any currently pending litigation or arbitration? ☐ Yes ☐ No				
Provide full details in a separate attachment if the response to any of these questions is Yes.				

8.03 List all projects currently under contract in Schedule A and provide indicated information.

8.04 List a minimum of three and a maximum of six projects completed in the last 5 years in Schedule B and provide indicated information to demonstrate the Business's experience with projects similar in type and cost of construction.

8.05 In Schedule C, provide information on key individuals whom Business intends to assign to the Project. Provide resumes for those individuals included in Schedule C. Key individuals include the Project Manager, Project Superintendent, Quality Manager, and Safety Manager. Resumes may be provided for Business's key leaders as well.

ARTICLE 9—REQUIRED ATTACHMENTS

9.01 Provide the following information with the Statement of Qualifications:

A. If Business is a Joint Venture, separate Qualifications Statements for each Joint Venturer, as required in Paragraph 1.02.

B. Diverse Business Certifications if required by Paragraph 3.01.

C. Certification of Business's safety performance if required by Paragraph 4.02.

D. Financial statements as required by Paragraph 5.01.

Copyright© 2018 National Society of Professional Engineers, American Council of Engineering Companies, and American Society of Civil Engineers. All rights reserved.

E. Attachments providing additional information as required by Paragraph 8.02.

F. Schedule A (Current Projects) as required by Paragraph 8.03.

G. Schedule B (Previous Experience with Similar Projects) as required by Paragraph 8.04.

H. Schedule C (Key Individuals) and resumes for the key individuals listed, as required by Paragraph 8.05.

I. Additional items as pertinent.

Copyright© 2018 National Society of Professional Engineers, American Council of Engineering Companies, and American Society of Civil Engineers. All rights reserved.

This Statement of Qualifications is offered by:

Business: _____
(typed or printed name of organization)

By: _____
(individual's signature)

Name: _____
(typed or printed)

Title: _____
(typed or printed)

Date: _____
(date signed)

(If Business is a corporation, a partnership, or a joint venture, attach evidence of authority to sign.)

Attest: _____
(individual's signature)

Name: _____
(typed or printed)

Title: _____
(typed or printed)

Address for giving notices:

_____

_____

_____

Designated Representative:

Name: _____
(typed or printed)

Title: _____
(typed or printed)

Address:

_____

_____

_____

Phone: _____

Email: _____

Copyright© 2018 National Society of Professional Engineers, American Council of Engineering Companies, and American Society of Civil Engineers. All rights reserved.

Schedule A—Current Projects

Name of Organization				
Project Owner		Project Name		
General Description of Project				
Project Cost		Date Project		
Key Project Personnel	Project Manager	Project Superintendent	Safety Manager	Quality Control Manager
Name				

Reference Contact Information (listing names indicates approval to contacting the names individuals as a reference)

	Name	Title/Position	Organization	Telephone	Email
Owner					
Designer					
Construction Manager					

Project Owner		Project Name		
General Description of Project				
Project Cost		Date Project		
Key Project Personnel	Project Manager	Project Superintendent	Safety Manager	Quality Control Manager
Name				

Reference Contact Information (listing names indicates approval to contacting the names individuals as a reference)

	Name	Title/Position	Organization	Telephone	Email
Owner					
Designer					
Construction Manager					

Project Owner		Project Name		
General Description of Project				
Project Cost		Date Project		
Key Project Personnel	Project Manager	Project Superintendent	Safety Manager	Quality Control Manager
Name				

Reference Contact Information (listing names indicates approval to contacting the names individuals as a reference)

	Name	Title/Position	Organization	Telephone	Email
Owner					
Designer					
Construction Manager					

Copyright© 2018 National Society of Professional Engineers, American Council of Engineering Companies, and American Society of Civil Engineers. All rights reserved.

Schedule B—Previous Experience with Similar Projects

Name of Organization				
Project Owner		Project Name		
General Description of Project				
Project Cost		Date Project		
Key Project Personnel	Project Manager	Project Superintendent	Safety Manager	Quality Control Manager
Name				

Reference Contact Information (listing names indicates approval to contacting the names individuals as a reference)

	Name	Title/Position	Organization	Telephone	Email
Owner					
Designer					
Construction Manager					

Project Owner		Project Name		
General Description of Project				
Project Cost		Date Project		
Key Project Personnel	Project Manager	Project Superintendent	Safety Manager	Quality Control Manager
Name				

Reference Contact Information (listing names indicates approval to contacting the names individuals as a reference)

	Name	Title/Position	Organization	Telephone	Email
Owner					
Designer					
Construction Manager					

Project Owner		Project Name		
General Description of Project				
Project Cost		Date Project		
Key Project Personnel	Project Manager	Project Superintendent	Safety Manager	Quality Control Manager
Name				

Reference Contact Information (listing names indicates approval to contacting the names individuals as a reference)

	Name	Title/Position	Organization	Telephone	Email
Owner					
Designer					
Construction Manager					

Copyright© 2018 National Society of Professional Engineers, American Council of Engineering Companies, and American Society of Civil Engineers. All rights reserved.

Schedule B—Previous Experience with Similar Projects

Name of Organization				
Project Owner		Project Name		
General Description of Project				
Project Cost		Date Project		
Key Project Personnel	Project Manager	Project Superintendent	Safety Manager	Quality Control Manager
Name				

Reference Contact Information (listing names indicates approval to contacting the names individuals as a reference)

	Name	Title/Position	Organization	Telephone	Email
Owner					
Designer					
Construction Manager					

Project Owner		Project Name		
General Description of Project				
Project Cost		Date Project		
Key Project Personnel	Project Manager	Project Superintendent	Safety Manager	Quality Control Manager
Name				

Reference Contact Information (listing names indicates approval to contacting the names individuals as a reference)

	Name	Title/Position	Organization	Telephone	Email
Owner					
Designer					
Construction Manager					

Project Owner		Project Name		
General Description of Project				
Project Cost		Date Project		
Key Project Personnel	Project Manager	Project Superintendent	Safety Manager	Quality Control Manager
Name				

Reference Contact Information (listing names indicates approval to contacting the names individuals as a reference)

	Name	Title/Position	Organization	Telephone	Email
Owner					
Designer					
Construction Manager					

Copyright© 2018 National Society of Professional Engineers, American Council of Engineering Companies, and American Society of Civil Engineers. All rights reserved.

Schedule C—Key Individuals

Project Manager			
Name of individual			
Years of experience as project manager			
Years of experience with this organization			
Number of similar projects as project manager			
Number of similar projects in other positions			
Current Project Assignments			
Name of assignment		Percent of time used for this project	Estimated project completion date
Reference Contact Information (listing names indicates approval to contact named individuals as a reference)			
Name		Name	
Title/Position		Title/Position	
Organization		Organization	
Telephone		Telephone	
Email		Email	
Project		Project	
Candidate's role on project		Candidate's role on project	
Project Superintendent			
Name of individual			
Years of experience as project superintendent			
Years of experience with this organization			
Number of similar projects as project superintendent			
Number of similar projects in other positions			
Current Project Assignments			
Name of assignment		Percent of time used for this project	Estimated project completion date
Reference Contact Information (listing names indicates approval to contact named individuals as a reference)			
Name		Name	
Title/Position		Title/Position	
Organization		Organization	
Telephone		Telephone	
Email		Email	
Project		Project	
Candidate's role on project		Candidate's role on project	

Copyright© 2018 National Society of Professional Engineers, American Council of Engineering Companies, and American Society of Civil Engineers. All rights reserved.

Safety Manager			
Name of individual			
Years of experience as project manager			
Years of experience with this organization			
Number of similar projects as project manager			
Number of similar projects in other positions			
Current Project Assignments			
Name of assignment		Percent of time used for this project	Estimated project completion date
Reference Contact Information (listing names indicates approval to contact named individuals as a reference)			
Name		Name	
Title/Position		Title/Position	
Organization		Organization	
Telephone		Telephone	
Email		Email	
Project		Project	
Candidate's role on project		Candidate's role on project	

Quality Control Manager			
Name of individual			
Years of experience as project superintendent			
Years of experience with this organization			
Number of similar projects as project superintendent			
Number of similar projects in other positions			
Current Project Assignments			
Name of assignment		Percent of time used for this project	Estimated project completion date
Reference Contact Information (listing names indicates approval to contact named individuals as a reference)			
Name		Name	
Title/Position		Title/Position	
Organization		Organization	
Telephone		Telephone	
Email		Email	
Project		Project	
Candidate's role on project		Candidate's role on project	

Copyright© 2018 National Society of Professional Engineers, American Council of Engineering Companies, and American Society of Civil Engineers. All rights reserved.

NOTICE OF AWARD

Date of Issuance:

Owner:	**Town of New Windsor**	Owner's Project No.:	**18-732**
Engineer:	**MHE Engineering D.P.C.**	Engineer's Project No.:	

Project: **Caesars Lane Wastewater Treatment Plant Expansion Phase 2 Project**

Contract Name:

Bidder:

Bidder's Address:

You are notified that Owner has accepted your Bid dated **[date]** for the above Contract, and that you are the Successful Bidder and are awarded a Contract for:

General Construction

The Contract Price of the awarded Contract is $**[Contract Price]**. Contract Price is subject to adjustment based on the provisions of the Contract, including but not limited to those governing changes, Unit Price Work, and Work performed on a cost-plus-fee basis, as applicable.
You must comply with the following conditions precedent within 15 days of the date of receipt of this Notice of Award:

1. Deliver the Contract security (such as required performance and payment bonds) and insurance documentation, as specified in the Instructions to Bidders and in the General Conditions, Articles 2 and 6.

Failure to comply with these conditions within the time specified will entitle Owner to consider you in default, annul this Notice of Award, and declare your Bid security forfeited.

Owner: **Town of New Windsor**
By *(signature)*: _____
Name *(printed)*: _____
Title: _____
Copy: Engineer

ACCEPTANCE OF NOTICE: Receipt of the above NOTICE OF AWARD is hereby acknowledged by _____
Contractor/Company Name

this_____day of_____, 2025

By _____

Title _____

Copyright© 2018 National Society of Professional Engineers, American Council of Engineering Companies, and American Society of Civil Engineers. All rights reserved.

AGREEMENT BETWEEN OWNER AND CONTRACTOR FOR CONSTRUCTION CONTRACT (STIPULATED PRICE)

This Agreement is by and between **Town of New Windsor** ("Owner") and **[name of contracting entity]** ("Contractor").

Terms used in this Agreement have the meanings stated in the General Conditions and the Supplementary Conditions.

Owner and Contractor hereby agree as follows:

ARTICLE 1 - WORK

1.01 Contractor shall complete all Work as specified or indicated in the Contract Documents. The Work is generally described as follows: **General Construction of new WWTP infrastructure including buildings, tanks, equipment, and various process structures, improvements and modifications to existing plant infrastructure, and complete or partial demolition of portions of existing plant infrastructure.**

ARTICLE 2 - THE PROJECT

2.01 The Project, of which the Work under the Contract Documents is a part, is generally described as follows: **General Construction of new WWTP infrastructure including buildings, tanks, equipment, and various process structures, improvements and modifications to existing plant infrastructure, and complete or partial demolition of portions of existing plant infrastructure.**

ARTICLE 3 - ENGINEER

3.01 The Owner has retained **MHE Engineering, D.P.C.** ("Engineer") to act as Owner's representative, assume all duties and responsibilities of Engineer, and have the rights and authority assigned to Engineer in the Contract.

ARTICLE 4 - CONTRACT TIMES

4.01 *Time is of the Essence*

A. All time limits for Milestones, if any, Substantial Completion, and completion and readiness for final payment as stated in the Contract Documents are of the essence of the Contract.

4.02 *Contract Times: Dates*

A. The Work will be substantially complete on or before **September 30, 2027** and completed and ready for final payment in accordance with Paragraph 15.06 of the General Conditions on or before **June 1, 2028.**

4.05 *Liquidated Damages*

A. Contractor and Owner recognize that time is of the essence as stated in Paragraph 4.01 above and that Owner will suffer financial and other losses if the Work is not completed and Milestones not achieved within the Contract Times, as duly modified. The parties also recognize the delays, expense, and difficulties involved in proving, in a legal or arbitration

EJCDC® C-520, Agreement between Owner and Contractor for Construction Contract (Stipulated Price).
Copyright© 2018 National Society of Professional Engineers, American Council of Engineering Companies, and American Society of Civil Engineers. All rights reserved.

proceeding, the actual loss suffered by Owner if the Work is not completed on time. Accordingly, instead of requiring any such proof, Owner and Contractor agree that as liquidated damages for delay (but not as a penalty):

1. *Substantial Completion:* Contractor shall pay Owner $ **1,000.00** for each day that expires after the time (as duly adjusted pursuant to the Contract) specified above for Substantial Completion, until the Work is substantially complete.

B. If Owner recovers liquidated damages for a delay in completion by Contractor, then such liquidated damages are Owner's sole and exclusive remedy for such delay, and Owner is precluded from recovering any other damages, whether actual, direct, excess, or consequential, for such delay, except for special damages (if any) specified in this Agreement.

4.06 *Special Damages*

A. Contractor shall reimburse Owner (1) for any fines or penalties imposed on Owner as a direct result of the Contractor's failure to attain Substantial Completion according to the Contract Times, and (2) for the actual costs reasonably incurred by Owner for engineering, construction observation, inspection, and administrative services needed after the time specified in Paragraph 4.02 for Substantial Completion (as duly adjusted pursuant to the Contract), until the Work is substantially complete.

B. After Contractor achieves Substantial Completion, if Contractor shall neglect, refuse, or fail to complete the remaining Work within the Contract Times, Contractor shall reimburse Owner for the actual costs reasonably incurred by Owner for engineering, construction observation, inspection, and administrative services needed after the time specified in Paragraph 4.02 for Work to be completed and ready for final payment (as duly adjusted pursuant to the Contract), until the Work is completed and ready for final payment.

C. The special damages imposed in this paragraph are supplemental to any liquidated damages for delayed completion established in this Agreement.

ARTICLE 5 - CONTRACT PRICE

5.01 Payment

A. Owner shall pay Contractor in accordance with Article 3-Basis of Bid, C-410 and the Contract for Work completed.

B. Payment will be made in an amount equal to the total of all extended prices for actual Work completed. The extended price is determined by multiplying the unit price times the actual quantity of that Work item completed. Actual quantities installed will be determined by the Engineer.

ARTICLE 6 - PAYMENT PROCEDURES

6.01 *Submittal and Processing of Payments*

A. Contractor shall submit Applications for Payment in accordance with Article 15 of the General Conditions. Applications for Payment will be processed by Engineer as provided in the General Conditions.

Copyright© 2018 National Society of Professional Engineers, American Council of Engineering Companies, and American Society of Civil Engineers. All rights reserved.

6.02 *Progress Payments; Retainage*

A. Owner shall make progress payments on the basis of Contractor's Applications for Payment on or about the **15th** day of each month during performance of the Work as provided in Paragraph 6.02.A.1 below, provided that such Applications for Payment have been submitted in a timely manner and otherwise meet the requirements of the Contract. All such payments will be measured by the Schedule of Values established as provided in the General Conditions (and in the case of Unit Price Work based on the number of units completed) or, in the event there is no Schedule of Values, as provided elsewhere in the Contract.

1. Prior to Substantial Completion, progress payments will be made in an amount equal to the percentage indicated below but, in each case, less the aggregate of payments previously made and less such amounts as Owner may withhold, including but not limited to liquidated damages, in accordance with the Contract.

a. **95** percent of the value of the Work completed (with the balance being retainage).

b. **95** percent of cost of materials and equipment not incorporated in the Work (with the balance being retainage).

B. Upon Substantial Completion **of the entire construction to be provided under the construction Contract Documents**, Owner shall pay an amount sufficient to increase total payments to Contractor to **100** percent of the Work completed, less such amounts set off by Owner pursuant to Paragraph 15.01.E of the General Conditions, and less **150** percent of Engineer's estimate of the value of Work to be completed or corrected as shown on the punch list of items to be completed or corrected prior to final payment.

6.03 *Final Payment*

A. Upon final completion and acceptance of the Work, Owner shall pay the remainder of the Contract Price in accordance with Paragraph 15.06 of the General Conditions.

6.04 *Consent of Surety*

A. Owner will not make final payment, or return or release retainage at Substantial Completion or any other time, unless Contractor submits written consent of the surety to such payment, return, or release.

ARTICLE 7 - CONTRACT DOCUMENTS

7.01 *Contents*

A. The Contract Documents consist of all of the following:

1. This Agreement.
2. Affidavit of Compliance with New York State Anti-Sexual Harassment Laws
3. Wicks Law form
4. Bonds:
   a. Performance bond (together with power of attorney).
   b. Payment bond (together with power of attorney).
5. General Conditions.

Copyright© 2018 National Society of Professional Engineers, American Council of Engineering Companies, and American Society of Civil Engineers. All rights reserved.

6. Supplementary Conditions.
7. Specifications as listed in the table of contents of the project manual (copy of list attached).
8. Drawings (not attached but incorporated by reference) consisting of **[number]** sheets with each sheet bearing the following general title: **[title on Drawings]**.
9. Addenda (numbers **[number]** to **[number]**, inclusive).
10. Exhibits to this Agreement (enumerated as follows):
    a. Exhibit A: EFC Mandatory State Financial Assistance Terms and Conditions
    b. Exhibit B: Pre-Construction Survey Report for Asbestos-Containing Materials (ACM) Lead-Based Paints (LBP) Polychlorinated Biphenyl (PCB) Prepared By QuES&T and Pre-Demolition/Pre-Renovation Inspection for Asbestos-Containing Materials (ACM) Prepared By QuES&T;
    c. Affidavit of Compliance with New York State Anti-Sexual Harassment Laws;
    d. Wicks Law Form;
    e. Exhibit A: EFC Mandatory State Financial Assistance Terms and Conditions;
    f. Exhibit B: Pre-Construction Survey Report for Asbestos-Containing Materials (ACM) Lead-Based Paints (LBP) Polychlorinated Biphenyl (PCB) Prepared By QuES&T and Pre-Demolition/Pre-Renovation Inspection for Asbestos-Containing Materials (ACM) Prepared By QuES&T;
    g. Exhibit C: Section 028300 Lead Safe Work Practices Specification and Section 028200 Asbestos Abatement Specification;
    h. Exhibit D: Geotechnical Investigation Proposed Improvements to Caesars Lane Waste Water Treatment Plant Prepared by Tectonic;
    i. Exhibit E: Stormwater Pollution Prevention Plan (SWPPP) for Caesars Lane Wastewater Treatment Plant Expansion Project Prepared by MHE Engineering;
    j. Exhibit F: Bid Plans For Caesars Lane WWTP Expansion Project: Phase 1;
    k. Exhibit G: Project Labor Agreement Covering Construction of the Caesars Lane WWTP Expansion Project Phase II;
    l. Exhibit H: Aqualogics Proposal;
    m. Exhibit I: Assigned Procurement Contract – Veolia Water Technologies & Solutions (F.K.A. Suez WTS USA, Inc.);
    n. Exhibit J: Additional Scope Change Order Proposal – Veolia Water Technologies & Solutions (F.K.A. Suez WTS USA, Inc.);
    o. Exhibit K: Veolia Water Technologies & Solutions (F.K.A. Suez WTS USA, Inc.) Contract Escalation Package;
    p. Exhibit L: D-BEN Security Systems, Inc. – List of Equipment and Quote.
    q. Exhibit M: NYSDEC Existing Outfall Abandonment Permit
    r. Exhibit N: NYSDEC New Outfall Permit

Copyright© 2018 National Society of Professional Engineers, American Council of Engineering Companies, and American Society of Civil Engineers. All rights reserved.

s. Exhibit O: Caesars Lane WWTP NYS DEC SPDES Permit

t. Exhibit P: Veolia Design Package

11. The following which may be delivered or issued on or after the Effective Date of the Contract and are not attached hereto:

a. Notice to Proceed.

b. Work Change Directives.

c. Change Orders.

d. Field Orders.

e. Warranty Bond, if any.

B. The Contract Documents listed in Paragraph 7.01.A are attached to this Agreement (except as expressly noted otherwise above).

C. There are no Contract Documents other than those listed above in this Article 7.

D. The Contract Documents may only be amended, modified, or supplemented as provided in the Contract.

ARTICLE 8 - REPRESENTATIONS, CERTIFICATIONS, AND STIPULATIONS

8.01 *Contractor's Representations*

A. In order to induce Owner to enter into this Contract, Contractor makes the following representations:

1. Contractor has examined and carefully studied the Contract Documents, including Addenda.

2. Contractor has visited the Site, conducted a thorough visual examination of the Site and adjacent areas, and become familiar with the general, local, and Site conditions that may affect cost, progress, and performance of the Work.

3. Contractor is familiar with all Laws and Regulations that may affect cost, progress, and performance of the Work.

4. Contractor has carefully studied the reports of explorations and tests of subsurface conditions at or adjacent to the Site and the drawings of physical conditions relating to existing surface or subsurface structures at the Site that have been identified in the Supplementary Conditions, with respect to the Technical Data in such reports and drawings.

5. Contractor has carefully studied the reports and drawings relating to Hazardous Environmental Conditions, if any, at or adjacent to the Site that have been identified in the Supplementary Conditions, with respect to Technical Data in such reports and drawings.

6. Contractor has considered the information known to Contractor itself; information commonly known to contractors doing business in the locality of the Site; information and observations obtained from visits to the Site; the Contract Documents; and the Technical Data identified in the Supplementary Conditions or by definition, with respect to the

Copyright© 2018 National Society of Professional Engineers, American Council of Engineering Companies, and American Society of Civil Engineers. All rights reserved.

effect of such information, observations, and Technical Data on (a) the cost, progress, and performance of the Work; (b) the means, methods, techniques, sequences, and procedures of construction to be employed by Contractor; and (c) Contractor's safety precautions and programs.

7. Based on the information and observations referred to in the preceding paragraph, Contractor agrees that no further examinations, investigations, explorations, tests, studies, or data are necessary for the performance of the Work at the Contract Price, within the Contract Times, and in accordance with the other terms and conditions of the Contract.

8. Contractor is aware of the general nature of work to be performed by Owner and others at the Site that relates to the Work as indicated in the Contract Documents.

9. Contractor has given Engineer written notice of all conflicts, errors, ambiguities, or discrepancies that Contractor has discovered in the Contract Documents, and of discrepancies between Site conditions and the Contract Documents, and the written resolution thereof by Engineer is acceptable to Contractor.

10. The Contract Documents are generally sufficient to indicate and convey understanding of all terms and conditions for performance and furnishing of the Work.

11. Contractor's entry into this Contract constitutes an incontrovertible representation by Contractor that without exception all prices in the Agreement are premised upon performing and furnishing the Work required by the Contract Documents.

12. The Engineer shall not be in any way responsible for any liability for claims, lawsuits, expenses or damages arising from, or in any manner related to the exposure to, or the handling or disposal of any asbestos or asbestos products or waste.

8.02 *Contractor's Certifications*

A. Contractor certifies that it has not engaged in corrupt, fraudulent, collusive, or coercive practices in competing for or in executing the Contract. For the purposes of this Paragraph 8.02:

1. "corrupt practice" means the offering, giving, receiving, or soliciting of anything of value likely to influence the action of a public official in the bidding process or in the Contract execution;

2. "fraudulent practice" means an intentional misrepresentation of facts made (a) to influence the bidding process or the execution of the Contract to the detriment of Owner, (b) to establish Bid or Contract prices at artificial non-competitive levels, or (c) to deprive Owner of the benefits of free and open competition;

3. "collusive practice" means a scheme or arrangement between two or more Bidders, with or without the knowledge of Owner, a purpose of which is to establish Bid prices at artificial, non-competitive levels; and

4. "coercive practice" means harming or threatening to harm, directly or indirectly, persons or their property to influence their participation in the bidding process or affect the execution of the Contract.

Copyright© 2018 National Society of Professional Engineers, American Council of Engineering Companies, and American Society of Civil Engineers. All rights reserved.

8.03 *Standard General Conditions*

A. Owner stipulates that if the General Conditions that are made a part of this Contract are EJCDC® C-700, Standard General Conditions for the Construction Contract (2018), published by the Engineers Joint Contract Documents Committee, and if Owner is the party that has furnished said General Conditions, then Owner has plainly shown all modifications to the standard wording of such published document to the Contractor, through a process such as highlighting or "track changes" (redline/strikeout), or in the Supplementary Conditions.

8.04 *Procurement Contract Assignment*

A. The contract between Owner as "Buyer" and Suez WTS USA, Inc. as "Seller" for procurement of goods and special services ("Procurement Contract") for MBR equipment will be assigned to Contractor by Owner, and Contractor [accepts] [will accept] such assignment. A form documenting the assignment is attached as an exhibit to this Agreement.

B. This assignment will occur on **[the Effective Date of the Agreement**] and will relieve the Owner as Buyer from all further obligations and liabilities under the Procurement Contract. Contractor, as Buyer (Contractor/Assignee) following assignment, will assume full responsibility to Owner for the performance of obligations by Seller, which will be Contractor's Subcontractor or Supplier. Notwithstanding this assignment, all performance guarantees and warranties required by the Procurement Contract will continue to run for the benefit of the Owner and, in addition, for the benefit of the Contractor. Except as noted in the Procurement Contract, all rights, duties, and obligations of Engineer to Buyer and Seller under the Procurement Contract will cease upon assignment.

C. A copy of the assigned Procurement Contract is attached as Exhibit J.

Copyright© 2018 National Society of Professional Engineers, American Council of Engineering Companies, and American Society of Civil Engineers. All rights reserved.

IN WITNESS WHEREOF, Owner and Contractor have signed this Agreement.

This Agreement will be effective on **[indicate date on which Contract becomes effective]** (which is the Effective Date of the Contract).

Owner:

_____
(typed or printed name of organization)

By: _____
(individual's signature)

Date: _____
(date signed)

Name: _____
(typed or printed)

Title: _____
(typed or printed)

Attest: _____
(individual's signature)

Title: _____
(typed or printed)

Address for giving notices:

_____

_____

_____

Designated Representative:

Name: _____
(typed or printed)

Title: _____
(typed or printed)

Address:

_____

_____

_____

Phone: _____

Email: _____

*(If **[Type of Entity]** is a corporation, attach evidence of authority to sign. If **[Type of Entity]** is a public body, attach evidence of authority to sign and resolution or other documents authorizing execution of this Agreement.)*

Contractor:

_____
(typed or printed name of organization)

By: _____
(individual's signature)

Date: _____
(date signed)

Name: _____
(typed or printed)

Title: _____
(typed or printed)

*(If **[Type of Entity]** is a corporation, a partnership, or a joint venture, attach evidence of authority to sign.)*

Attest: _____
(individual's signature)

Title: _____
(typed or printed)

Address for giving notices:

_____

_____

_____

Designated Representative:

Name: _____
(typed or printed)

Title: _____
(typed or printed)

Address:

_____

_____

_____

Phone: _____

Email: _____

License No.: _____
(where applicable)

State: _____

Copyright© 2018 National Society of Professional Engineers, American Council of Engineering Companies, and American Society of Civil Engineers. All rights reserved.

PERFORMANCE BOND

Contractor	**Surety**
Name:	Name:
Address *(principal place of business)*:	Address *(principal place of business)*:
Owner	**Contract**
Name: **Town of New Windsor**	Description *(name and location)*:
Mailing address *(principal place of business)*:	**Town of New Windsor** **Caesars Lane Wastewater Treatment Plant Expansion Phase 2 Project**
555 Union Avenue **New Windsor, NY 12553**	Contract Price:
	Effective Date of Contract:

Bond

Bond Amount:

Date of Bond:

(Date of Bond cannot be earlier than Effective Date of Contract)

Modifications to this Bond form:

☐ None ☐ See Paragraph 16

Surety and Contractor, intending to be legally bound hereby, subject to the terms set forth in this Performance Bond, do each cause this Performance Bond to be duly executed by an authorized officer, agent, or representative.

Contractor as Principal	Surety
_____	_____
(Full formal name of Contractor)	*(Full formal name of Surety) (corporate seal)*
By: _____	By: _____
(Signature)	*(Signature)(Attach Power of Attorney)*
Name: _____	Name: _____
(Printed or typed)	*(Printed or typed)*
Title: _____	Title: _____
Attest: _____	Attest: _____
(Signature)	*(Signature)*
Name: _____	Name: _____
(Printed or typed)	*(Printed or typed)*
Title: _____	Title: _____

Notes: (1) Provide supplemental execution by any additional parties, such as joint venturers. (2) Any singular reference to Contractor, Surety, Owner, or other party is considered plural where applicable.

Copyright© 2018 National Society of Professional Engineers, American Council of Engineering Companies, and American Society of Civil Engineers. All rights reserved.

1. The Contractor and Surety, jointly and severally, bind themselves, their heirs, executors, administrators, successors, and assigns to the Owner for the performance of the Construction Contract, which is incorporated herein by reference.

2. If the Contractor performs the Construction Contract, the Surety and the Contractor shall have no obligation under this Bond, except when applicable to participate in a conference as provided in Paragraph 3.

3. If there is no Owner Default under the Construction Contract, the Surety's obligation under this Bond will arise after:

    3.1. The Owner first provides notice to the Contractor and the Surety that the Owner is considering declaring a Contractor Default. Such notice may indicate whether the Owner is requesting a conference among the Owner, Contractor, and Surety to discuss the Contractor's performance. If the Owner does not request a conference, the Surety may, within five (5) business days after receipt of the Owner's notice, request such a conference. If the Surety timely requests a conference, the Owner shall attend. Unless the Owner agrees otherwise, any conference requested under this Paragraph 3.1 will be held within ten (10) business days of the Surety's receipt of the Owner's notice. If the Owner, the Contractor, and the Surety agree, the Contractor shall be allowed a reasonable time to perform the Construction Contract, but such an agreement does not waive the Owner's right, if any, subsequently to declare a Contractor Default;

    3.2. The Owner declares a Contractor Default, terminates the Construction Contract and notifies the Surety; and

    3.3. The Owner has agreed to pay the Balance of the Contract Price in accordance with the terms of the Construction Contract to the Surety or to a contractor selected to perform the Construction Contract.

4. Failure on the part of the Owner to comply with the notice requirement in Paragraph 3.1 does not constitute a failure to comply with a condition precedent to the Surety's obligations, or release the Surety from its obligations, except to the extent the Surety demonstrates actual prejudice.

5. When the Owner has satisfied the conditions of Paragraph 3, the Surety shall promptly and at the Surety's expense take one of the following actions:

    5.1. Arrange for the Contractor, with the consent of the Owner, to perform and complete the Construction Contract;

    5.2. Undertake to perform and complete the Construction Contract itself, through its agents or independent contractors;

    5.3. Obtain bids or negotiated proposals from qualified contractors acceptable to the Owner for a contract for performance and completion of the Construction Contract, arrange for a contract to be prepared for execution by the Owner and a contractor selected with the Owners concurrence, to be secured with performance and payment bonds executed by a qualified surety equivalent to the bonds issued on the Construction Contract, and pay to the Owner the amount of damages as described in Paragraph 7 in excess of the Balance of the Contract Price incurred by the Owner as a result of the Contractor Default; or

    5.4. Waive its right to perform and complete, arrange for completion, or obtain a new contractor, and with reasonable promptness under the circumstances:

Copyright© 2018 National Society of Professional Engineers, American Council of Engineering Companies, and American Society of Civil Engineers. All rights reserved.

5.4.1 After investigation, determine the amount for which it may be liable to the Owner and, as soon as practicable after the amount is determined, make payment to the Owner; or

5.4.2 Deny liability in whole or in part and notify the Owner, citing the reasons for denial.

6. If the Surety does not proceed as provided in Paragraph 5 with reasonable promptness, the Surety shall be deemed to be in default on this Bond seven days after receipt of an additional written notice from the Owner to the Surety demanding that the Surety perform its obligations under this Bond, and the Owner shall be entitled to enforce any remedy available to the Owner. If the Surety proceeds as provided in Paragraph 5.4, and the Owner refuses the payment, or the Surety has denied liability, in whole or in part, without further notice, the Owner shall be entitled to enforce any remedy available to the Owner.

7. If the Surety elects to act under Paragraph 5.1, 5.2, or 5.3, then the responsibilities of the Surety to the Owner will not be greater than those of the Contractor under the Construction Contract, and the responsibilities of the Owner to the Surety will not be greater than those of the Owner under the Construction Contract. Subject to the commitment by the Owner to pay the Balance of the Contract Price, the Surety is obligated, without duplication for:

   7.1. the responsibilities of the Contractor for correction of defective work and completion of the Construction Contract;

   7.2. additional legal, design professional, and delay costs resulting from the Contractor's Default, and resulting from the actions or failure to act of the Surety under Paragraph 5; and

   7.3. liquidated damages, or if no liquidated damages are specified in the Construction Contract, actual damages caused by delayed performance or non-performance of the Contractor.

8. If the Surety elects to act under Paragraph 5.1, 5.3, or 5.4, the Surety's liability is limited to the amount of this Bond.

9. The Surety shall not be liable to the Owner or others for obligations of the Contractor that are unrelated to the Construction Contract, and the Balance of the Contract Price will not be reduced or set off on account of any such unrelated obligations. No right of action will accrue on this Bond to any person or entity other than the Owner or its heirs, executors, administrators, successors, and assigns.

10. The Surety hereby waives notice of any change, including changes of time, to the Construction Contract or to related subcontracts, purchase orders, and other obligations.

11. Any proceeding, legal or equitable, under this Bond must be instituted in any court of competent jurisdiction in the location in which the work or part of the work is located and must be instituted within two years after a declaration of Contractor Default or within two years after the Contractor ceased working or within two years after the Surety refuses or fails to perform its obligations under this Bond, whichever occurs first. If the provisions of this paragraph are void or prohibited by law, the minimum periods of limitations available to sureties as a defense in the jurisdiction of the suit will be applicable.

12. Notice to the Surety, the Owner, or the Contractor must be mailed or delivered to the address shown on the page on which their signature appears.

13. When this Bond has been furnished to comply with a statutory or other legal requirement in the location where the construction was to be performed, any provision in this Bond conflicting with said statutory or legal requirement will be deemed deleted therefrom and provisions conforming to such

Copyright© 2018 National Society of Professional Engineers, American Council of Engineering Companies, and American Society of Civil Engineers. All rights reserved.

statutory or other legal requirement will be deemed incorporated herein. When so furnished, the intent is that this Bond will be construed as a statutory bond and not as a common law bond.

14. Definitions

    14.1. *Balance of the Contract Price*—The total amount payable by the Owner to the Contractor under the Construction Contract after all proper adjustments have been made including allowance for the Contractor for any amounts received or to be received by the Owner in settlement of insurance or other claims for damages to which the Contractor is entitled, reduced by all valid and proper payments made to or on behalf of the Contractor under the Construction Contract.

    14.2. *Construction Contract*—The agreement between the Owner and Contractor identified on the cover page, including all Contract Documents and changes made to the agreement and the Contract Documents.

    14.3. *Contractor Default*—Failure of the Contractor, which has not been remedied or waived, to perform or otherwise to comply with a material term of the Construction Contract.

    14.4. *Owner Default*—Failure of the Owner, which has not been remedied or waived, to pay the Contractor as required under the Construction Contract or to perform and complete or comply with the other material terms of the Construction Contract.

    14.5. *Contract Documents*—All the documents that comprise the agreement between the Owner and Contractor.

15. If this Bond is issued for an agreement between a contractor and subcontractor, the term Contractor in this Bond will be deemed to be Subcontractor and the term Owner will be deemed to be Contractor.

16. Modifications to this Bond are as follows: **None**

Copyright© 2018 National Society of Professional Engineers, American Council of Engineering Companies, and American Society of Civil Engineers. All rights reserved.

PAYMENT BOND

Contractor	**Surety**
Name:	Name:
Address *(principal place of business)*:	Address *(principal place of business)*:
Owner	**Contract**
Name: **Town of New Windsor** Mailing address *(principal place of business)*: **555 Union Avenue** **New Windsor, NY 12553**	Description *(name and location)*: **Town of New Windsor** **Caesars Lane Wastewater Treatment Plant Expansion Phase 2 Project** Contract Price: Effective Date of Contract:

Bond

Bond Amount:

Date of Bond:

(Date of Bond cannot be earlier than Effective Date of Contract)

Modifications to this Bond form:

☐ None ☐ See Paragraph 18

Surety and Contractor, intending to be legally bound hereby, subject to the terms set forth in this Payment Bond, do each cause this Payment Bond to be duly executed by an authorized officer, agent, or representative.

Contractor as Principal	Surety
_____	_____
(Full formal name of Contractor)	*(Full formal name of Surety) (corporate seal)*
By: _____	By: _____
(Signature)	*(Signature)(Attach Power of Attorney)*
Name: _____	Name: _____
(Printed or typed)	*(Printed or typed)*
Title: _____	Title: _____
Attest: _____	Attest: _____
(Signature)	*(Signature)*
Name: _____	Name: _____
(Printed or typed)	*(Printed or typed)*
Title: _____	Title: _____

Notes: (1) Provide supplemental execution by any additional parties, such as joint venturers. (2) Any singular reference to Contractor, Surety, Owner, or other party is considered plural where applicable.

EJCDC® C-615, Payment Bond.
Copyright© 2018 National Society of Professional Engineers, American Council of Engineering Companies, and American Society of Civil Engineers. All rights reserved.

1. The Contractor and Surety, jointly and severally, bind themselves, their heirs, executors, administrators, successors, and assigns to the Owner to pay for labor, materials, and equipment furnished for use in the performance of the Construction Contract, which is incorporated herein by reference, subject to the following terms.

2. If the Contractor promptly makes payment of all sums due to Claimants, and defends, indemnifies, and holds harmless the Owner from claims, demands, liens, or suits by any person or entity seeking payment for labor, materials, or equipment furnished for use in the performance of the Construction Contract, then the Surety and the Contractor shall have no obligation under this Bond.

3. If there is no Owner Default under the Construction Contract, the Surety's obligation to the Owner under this Bond will arise after the Owner has promptly notified the Contractor and the Surety (at the address described in Paragraph 13) of claims, demands, liens, or suits against the Owner or the Owner's property by any person or entity seeking payment for labor, materials, or equipment furnished for use in the performance of the Construction Contract, and tendered defense of such claims, demands, liens, or suits to the Contractor and the Surety.

4. When the Owner has satisfied the conditions in Paragraph 3, the Surety shall promptly and at the Surety's expense defend, indemnify, and hold harmless the Owner against a duly tendered claim, demand, lien, or suit.

5. The Surety's obligations to a Claimant under this Bond will arise after the following:

    5.1. Claimants who do not have a direct contract with the Contractor

        5.1.1. have furnished a written notice of non-payment to the Contractor, stating with substantial accuracy the amount claimed and the name of the party to whom the materials were, or equipment was, furnished or supplied or for whom the labor was done or performed, within ninety (90) days after having last performed labor or last furnished materials or equipment included in the Claim; and

        5.1.2. have sent a Claim to the Surety (at the address described in Paragraph 13).

    5.2. Claimants who are employed by or have a direct contract with the Contractor have sent a Claim to the Surety (at the address described in Paragraph 13).

6. If a notice of non-payment required by Paragraph 5.1.1 is given by the Owner to the Contractor, that is sufficient to satisfy a Claimant's obligation to furnish a written notice of non-payment under Paragraph 5.1.1.

7. When a Claimant has satisfied the conditions of Paragraph 5.1 or 5.2, whichever is applicable, the Surety shall promptly and at the Surety's expense take the following actions:

    7.1. Send an answer to the Claimant, with a copy to the Owner, within sixty (60) days after receipt of the Claim, stating the amounts that are undisputed and the basis for challenging any amounts that are disputed; and

    7.2. Pay or arrange for payment of any undisputed amounts.

    7.3. The Surety's failure to discharge its obligations under Paragraph 7.1 or 7.2 will not be deemed to constitute a waiver of defenses the Surety or Contractor may have or acquire as to a Claim, except as to undisputed amounts for which the Surety and Claimant have reached agreement. If, however, the Surety fails to discharge its obligations under Paragraph 7.1 or 7.2, the Surety shall indemnify the Claimant for the reasonable attorney's fees the Claimant incurs thereafter to recover any sums found to be due and owing to the Claimant.

Copyright© 2018 National Society of Professional Engineers, American Council of Engineering Companies, and American Society of Civil Engineers. All rights reserved.

8. The Surety's total obligation will not exceed the amount of this Bond, plus the amount of reasonable attorney's fees provided under Paragraph 7.3, and the amount of this Bond will be credited for any payments made in good faith by the Surety.

9. Amounts owed by the Owner to the Contractor under the Construction Contract will be used for the performance of the Construction Contract and to satisfy claims, if any, under any construction performance bond. By the Contractor furnishing and the Owner accepting this Bond, they agree that all funds earned by the Contractor in the performance of the Construction Contract are dedicated to satisfying obligations of the Contractor and Surety under this Bond, subject to the Owner's priority to use the funds for the completion of the work.

10. The Surety shall not be liable to the Owner, Claimants, or others for obligations of the Contractor that are unrelated to the Construction Contract. The Owner shall not be liable for the payment of any costs or expenses of any Claimant under this Bond, and shall have under this Bond no obligation to make payments to or give notice on behalf of Claimants, or otherwise have any obligations to Claimants under this Bond.

11. The Surety hereby waives notice of any change, including changes of time, to the Construction Contract or to related subcontracts, purchase orders, and other obligations.

12. No suit or action will be commenced by a Claimant under this Bond other than in a court of competent jurisdiction in the state in which the project that is the subject of the Construction Contract is located or after the expiration of one year from the date (1) on which the Claimant sent a Claim to the Surety pursuant to Paragraph 5.1.2 or 5.2, or (2) on which the last labor or service was performed by anyone or the last materials or equipment were furnished by anyone under the Construction Contract, whichever of (1) or (2) first occurs. If the provisions of this paragraph are void or prohibited by law, the minimum period of limitation available to sureties as a defense in the jurisdiction of the suit will be applicable.

13. Notice and Claims to the Surety, the Owner, or the Contractor must be mailed or delivered to the address shown on the page on which their signature appears. Actual receipt of notice or Claims, however accomplished, will be sufficient compliance as of the date received.

14. When this Bond has been furnished to comply with a statutory or other legal requirement in the location where the construction was to be performed, any provision in this Bond conflicting with said statutory or legal requirement will be deemed deleted here from and provisions conforming to such statutory or other legal requirement will be deemed incorporated herein. When so furnished, the intent is that this Bond will be construed as a statutory bond and not as a common law bond.

15. Upon requests by any person or entity appearing to be a potential beneficiary of this Bond, the Contractor and Owner shall promptly furnish a copy of this Bond or shall permit a copy to be made.

16. Definitions

    16.1. *Claim*—A written statement by the Claimant including at a minimum:

        16.1.1. The name of the Claimant;

        16.1.2. The name of the person for whom the labor was done, or materials or equipment furnished;

        16.1.3. A copy of the agreement or purchase order pursuant to which labor, materials, or equipment was furnished for use in the performance of the Construction Contract;

        16.1.4. A brief description of the labor, materials, or equipment furnished;

Copyright© 2018 National Society of Professional Engineers, American Council of Engineering Companies, and American Society of Civil Engineers. All rights reserved.

16.1.5. The date on which the Claimant last performed labor or last furnished materials or equipment for use in the performance of the Construction Contract;

16.1.6. The total amount earned by the Claimant for labor, materials, or equipment furnished as of the date of the Claim;

16.1.7. The total amount of previous payments received by the Claimant; and

16.1.8. The total amount due and unpaid to the Claimant for labor, materials, or equipment furnished as of the date of the Claim.

16.2. *Claimant*—An individual or entity having a direct contract with the Contractor or with a subcontractor of the Contractor to furnish labor, materials, or equipment for use in the performance of the Construction Contract. The term Claimant also includes any individual or entity that has rightfully asserted a claim under an applicable mechanic's lien or similar statute against the real property upon which the Project is located. The intent of this Bond is to include without limitation in the terms of "labor, materials, or equipment" that part of the water, gas, power, light, heat, oil, gasoline, telephone service, or rental equipment used in the Construction Contract, architectural and engineering services required for performance of the work of the Contractor and the Contractor's subcontractors, and all other items for which a mechanic's lien may be asserted in the jurisdiction where the labor, materials, or equipment were furnished.

16.3. *Construction Contract*—The agreement between the Owner and Contractor identified on the cover page, including all Contract Documents and all changes made to the agreement and the Contract Documents.

16.4. *Owner Default*—Failure of the Owner, which has not been remedied or waived, to pay the Contractor as required under the Construction Contract or to perform and complete or comply with the other material terms of the Construction Contract.

16.5. *Contract Documents*—All the documents that comprise the agreement between the Owner and Contractor.

17. If this Bond is issued for an agreement between a contractor and subcontractor, the term Contractor in this Bond will be deemed to be Subcontractor and the term Owner will be deemed to be Contractor.

18. Modifications to this Bond are as follows: **None**

Copyright© 2018 National Society of Professional Engineers, American Council of Engineering Companies, and American Society of Civil Engineers. All rights reserved.

NOTICE TO PROCEED

Owner:	**Town of New Windsor**	Owner's Project No.:	
Engineer:	**MHE Engineering, D.P.C.**	Engineer's Project No.:	**18-732**
Contractor:		Contractor's Project No.:	
Project:	**Caesars Lane Wastewater Treatment Plant Expansion Phase 2 Project**		
Contract Name:			
Effective Date of Contract:			

Owner hereby notifies Contractor that the Contract Times under the above Contract will commence to run on **[date Contract Times are to start]** pursuant to Paragraph 4.01 of the General Conditions.

On that date, Contractor shall start performing its obligations under the Contract Documents. No Work will be done at the Site prior to such date.

In accordance with the Agreement: **[Select one of the following two alternatives, insert dates or number of days, and delete the other alternative.]**

The date by which Substantial Completion must be achieved is **[date for Substantial Completion, from Agreement]**, and the date by which readiness for final payment must be achieved is **[date for readiness, from Agreement]**.

[or]

The number of days to achieve Substantial Completion is **[number of days, from Agreement]** from the date stated above for the commencement of the Contract Times, resulting in a date for Substantial Completion of **[date, calculated from commencement date above]**; and the number of days to achieve readiness for final payment is **[number of days, from Agreement]** from the commencement date of the Contract Times, resulting in a date for readiness for final payment of **[date, calculated from commencement date above]**.

Before starting any Work at the Site, Contractor must comply with the following:

[Note any access limitations, security procedures, or other restrictions]

Owner:	**Town of New Windsor**
By *(signature)*:	
Name *(printed)*:	
Title:	
Date Issued:	

ACCEPTANCE OF NOTICE: Receipt of the above NOTICE OF AWARD is hereby acknowledged by _____

Contractor/Company Name

this_____day of_____, 2025

By _____

Title _____

Copy: Engineer

Copyright© 2018 National Society of Professional Engineers, American Council of Engineering Companies, and American Society of Civil Engineers. All rights reserved.

STANDARD GENERAL CONDITIONS OF THE CONSTRUCTION CONTRACT

TABLE OF CONTENTS

Page

Article 1—Definitions and Terminology 1
1.01 Defined Terms 1
1.02 Terminology 6
Article 2—Preliminary Matters 7
2.01 Delivery of Performance and Payment Bonds; Evidence of Insurance 7
2.02 Copies of Documents 7
2.03 Before Starting Construction 7
2.04 Preconstruction Conference; Designation of Authorized Representatives 8
2.05 Acceptance of Schedules 8
2.06 Electronic Transmittals 8
Article 3—Contract Documents: Intent, Requirements, Reuse 12
3.01 Intent 12
3.02 Reference Standards 12
3.03 Reporting and Resolving Discrepancies 13
3.04 Requirements of the Contract Documents 14
3.05 Reuse of Documents 15
Article 4—Commencement and Progress of the Work 15
4.01 Commencement of Contract Times; Notice to Proceed 15
4.02 Starting the Work 15
4.03 Reference Points 15
4.04 Progress Schedule 16
4.05 Delays in Contractor's Progress 16
Article 5—Site; Subsurface and Physical Conditions; Hazardous Environmental Conditions 17
5.01 Availability of Lands 17
5.02 Use of Site and Other Areas 18
5.03 Subsurface and Physical Conditions 19
5.04 Differing Subsurface or Physical Conditions 20

Copyright© 2018 National Society of Professional Engineers, American Council of Engineering Companies, and American Society of Civil Engineers. All rights reserved.

5.05 Underground Facilities 21
5.06 Hazardous Environmental Conditions at Site 23
Article 6—Bonds and Insurance 26
6.01 Performance, Payment, and Other Bonds 26
6.02 Insurance—General Provisions 27
6.03 Contractor's Insurance 28
6.04 Builder's Risk and Other Property Insurance 34
6.05 Property Losses; Subrogation 34
6.06 Receipt and Application of Property Insurance Proceeds 35
6.07 Defense, Indemnification And Hold Harmless Provisions 35
Article 7—Contractor's Responsibilities 26
7.01 Contractor's Means and Methods of Construction 36
7.02 Supervision and Superintendence 36
7.03 Labor; Working Hours 37
7.04 Services, Materials, and Equipment 37
7.05 "Or Equals" 38
7.06 Substitutes 39
7.07 Concerning Subcontractors and Suppliers 40
7.08 Patent Fees and Royalties 42
7.09 Permits 42
7.10 Taxes 42
7.11 Laws and Regulations 43
7.12 Record Documents 43
7.13 Safety and Protection 43
7.14 Hazard Communication Programs 45
7.15 Emergencies 45
7.16 Submittals 45
7.17 Contractor's General Warranty and Guarantee 48
7.18 Indemnification 49
7.19 Delegation of Professional Design Services 49
Article 8—Other Work at the Site 50
8.01 Other Work 50
8.02 Coordination 51

Copyright© 2018 National Society of Professional Engineers, American Council of Engineering Companies, and American Society of Civil Engineers. All rights reserved.

8.03 Legal Relationships 51
Article 9—Owner's Responsibilities 52
9.01 Communications to Contractor 52
9.02 Replacement of Engineer 52
9.03 Furnish Data 52
9.04 Pay When Due 52
9.05 Lands and Easements; Reports, Tests, and Drawings 53
9.06 Insurance 53
9.07 Change Orders 53
9.08 Inspections, Tests, and Approvals 53
9.09 Limitations on Owner's Responsibilities 53
9.10 Undisclosed Hazardous Environmental Condition 53
9.11 Evidence of Financial Arrangements 53
9.12 Safety Programs 53
Article 10—Engineer's Status During Construction 54
10.01 Owner's Representative 54
10.02 Visits to Site 54
10.03 Engineer's Authority 54
10.04 Determinations for Unit Price Work 54
10.05 Decisions on Requirements of Contract Documents and Acceptability of Work 54
10.06 Limitations on Engineer's Authority and Responsibilities 55
10.07 Compliance with Safety Program 55
Article 11—Changes to the Contract 55
11.01 Amending and Supplementing the Contract 55
11.02 Change Orders 56
11.03 Work Change Directives 56
11.04 Field Orders 57
11.05 Owner-Authorized Changes in the Work 57
11.06 Unauthorized Changes in the Work 57
11.07 Change of Contract Price 57
11.08 Change of Contract Times 59
11.09 Change Proposals 59
11.10 Notification to Surety 60

Copyright© 2018 National Society of Professional Engineers, American Council of Engineering Companies, and American Society of Civil Engineers. All rights reserved.

Article 12—Claims 60
12.01 Claims 60
Article 13—Cost of the Work; Allowances; Unit Price Work 62
13.01 Cost of the Work 62
13.02 Allowances 65
13.03 Unit Price Work 65
Article 14—Tests and Inspections; Correction, Removal, or Acceptance of Defective Work 66
14.01 Access to Work 66
14.02 Tests, Inspections, and Approvals 66
14.03 Defective Work 67
14.04 Acceptance of Defective Work 68
14.05 Uncovering Work 68
14.06 Owner May Stop the Work 69
14.07 Owner May Correct Defective Work 69
Article 15—Payments to Contractor; Set-Offs; Completion; Correction Period 69
15.01 Progress Payments 69
15.02 Contractor's Warranty of Title 73
15.03 Substantial Completion 73
15.04 Partial Use or Occupancy 74
15.05 Final Inspection 74
15.06 Final Payment 74
15.07 Waiver of Claims 76
15.08 Correction Period 76
Article 16—Suspension of Work and Termination 77
16.01 Owner May Suspend Work 77
16.02 Owner May Terminate for Cause 77
16.03 Owner May Terminate for Convenience 78
16.04 Contractor May Stop Work or Terminate 79
Article 17—Final Resolution of Disputes 79
17.01 Methods and Procedures 79
Article 18—Miscellaneous 79
18.01 Giving Notice 79
18.02 Computation of Times 80

Copyright© 2018 National Society of Professional Engineers, American Council of Engineering Companies, and American Society of Civil Engineers. All rights reserved.

18.03 Cumulative Remedies 80
18.04 Limitation of Damages 80
18.05 No Waiver 80
18.06 Survival of Obligations 80
18.07 Controlling Law 80
18.08 Assignment of Contract 80
18.09 Successors and Assigns 81
18.10 Headings 81

Copyright© 2018 National Society of Professional Engineers, American Council of Engineering Companies, and American Society of Civil Engineers. All rights reserved.

STANDARD GENERAL CONDITIONS OF THE CONSTRUCTION CONTRACT

ARTICLE 1—DEFINITIONS AND TERMINOLOGY

1.01 *Defined Terms*

A. Wherever used in the Bidding Requirements or Contract Documents, a term printed with initial capital letters, including the term's singular and plural forms, will have the meaning indicated in the definitions below. In addition to terms specifically defined, terms with initial capital letters in the Contract Documents include references to identified articles and paragraphs, and the titles of other documents or forms.

1. *Addenda*—Written or graphic instruments issued prior to the opening of Bids which clarify, correct, or change the Bidding Requirements or the proposed Contract Documents.

2. *Agreement*—The written instrument, executed by Owner and Contractor, that sets forth the Contract Price and Contract Times, identifies the parties and the Engineer, and designates the specific items that are Contract Documents.

3. *Application for Payment*—The document prepared by Contractor, in a form acceptable to Engineer, to request progress or final payments, and which is to be accompanied by such supporting documentation as is required by the Contract Documents.

4. *Bid*—The offer of a Bidder submitted on the prescribed form setting forth the prices for the Work to be performed.

5. *Bidder*—An individual or entity that submits a Bid to Owner.

6. *Bidding Documents*—The Bidding Requirements, the proposed Contract Documents, and all Addenda.

7. *Bidding Requirements*—The Advertisement or invitation to bid, Instructions to Bidders, Bid Bond or other Bid security, if any, the Bid Form, and the Bid with any attachments.

8. *Change Order*—A document which is signed by Contractor and Owner and authorizes an addition, deletion, or revision in the Work or an adjustment in the Contract Price or the Contract Times, or other revision to the Contract, issued on or after the Effective Date of the Contract.

9. *Change Proposal*—A written request by Contractor, duly submitted in compliance with the procedural requirements set forth herein, seeking an adjustment in Contract Price or Contract Times; contesting an initial decision by Engineer concerning the requirements of the Contract Documents or the acceptability of Work under the Contract Documents; challenging a set-off against payments due; or seeking other relief with respect to the terms of the Contract.

10. *Claim*

a. A demand or assertion by Owner directly to Contractor, duly submitted in compliance with the procedural requirements set forth herein, seeking an adjustment of Contract Price or Contract Times; contesting an initial decision by Engineer concerning the

Copyright© 2018 National Society of Professional Engineers, American Council of Engineering Companies, and American Society of Civil Engineers. All rights reserved.

requirements of the Contract Documents or the acceptability of Work under the Contract Documents; contesting Engineer's decision regarding a Change Proposal; seeking resolution of a contractual issue that Engineer has declined to address; or seeking other relief with respect to the terms of the Contract.

b. A demand or assertion by Contractor directly to Owner, duly submitted in compliance with the procedural requirements set forth herein, contesting Engineer's decision regarding a Change Proposal, or seeking resolution of a contractual issue that Engineer has declined to address.

c. A demand or assertion by Owner or Contractor, duly submitted in compliance with the procedural requirements set forth herein, made pursuant to Paragraph 12.01.A.4, concerning disputes arising after Engineer has issued a recommendation of final payment.

d. A demand for money or services by a third party is not a Claim.

11. *Constituent of Concern*—Asbestos, petroleum, radioactive materials, polychlorinated biphenyls (PCBs), lead-based paint (as defined by the HUD/EPA standard), hazardous waste, and any substance, product, waste, or other material of any nature whatsoever that is or becomes listed, regulated, or addressed pursuant to Laws and Regulations regulating, relating to, or imposing liability or standards of conduct concerning, any hazardous, toxic, or dangerous waste, substance, or material.

12. *Contract*—The entire and integrated written contract between Owner and Contractor concerning the Work.

13. *Contract Documents*—Those items so designated in the Agreement, and which together comprise the Contract.

14. *Contract Price*—The money that Owner has agreed to pay Contractor for completion of the Work in accordance with the Contract Documents.

15. *Contract Times*—The number of days or the dates by which Contractor shall: (a) achieve Milestones, if any; (b) achieve Substantial Completion; and (c) complete the Work.

16. *Contractor*—The individual or entity with which Owner has contracted for performance of the Work.

17. *Cost of the Work*—See Paragraph 13.01 for definition.

18. *Drawings*—The part of the Contract that graphically shows the scope, extent, and character of the Work to be performed by Contractor.

19. *Effective Date of the Contract*—The date, indicated in the Agreement, on which the Contract becomes effective.

20. *Electronic Document*—Any Project-related correspondence, attachments to correspondence, data, documents, drawings, information, or graphics, including but not limited to Shop Drawings and other Submittals, that are in an electronic or digital format.

21. *Electronic Means*—Electronic mail (email), upload/download from a secure Project website, or other communications methods that allow: (a) the transmission or communication of Electronic Documents; (b) the documentation of transmissions, including sending and receipt; (c) printing of the transmitted Electronic Document by the

Copyright© 2018 National Society of Professional Engineers, American Council of Engineering Companies, and American Society of Civil Engineers. All rights reserved.

recipient; (d) the storage and archiving of the Electronic Document by sender and recipient; and (e) the use by recipient of the Electronic Document for purposes permitted by this Contract. Electronic Means does not include the use of text messaging, or of Facebook, Twitter, Instagram, or similar social media services for transmission of Electronic Documents.

22. *Engineer*—The individual or entity named as such in the Agreement.

23. *Field Order*—A written order issued by Engineer which requires minor changes in the Work but does not change the Contract Price or the Contract Times.

24. *Hazardous Environmental Condition*—The presence at the Site of Constituents of Concern in such quantities or circumstances that may present a danger to persons or property exposed thereto.

    a. The presence at the Site of materials that are necessary for the execution of the Work, or that are to be incorporated into the Work, and that are controlled and contained pursuant to industry practices, Laws and Regulations, and the requirements of the Contract, is not a Hazardous Environmental Condition.

    b. The presence of Constituents of Concern that are to be removed or remediated as part of the Work is not a Hazardous Environmental Condition.

    c. The presence of Constituents of Concern as part of the routine, anticipated, and obvious working conditions at the Site, is not a Hazardous Environmental Condition.

25. *Laws and Regulations; Laws or Regulations*—Any and all applicable laws, statutes, rules, regulations, ordinances, codes, and binding decrees, resolutions, and orders of any and all governmental bodies, agencies, authorities, and courts having jurisdiction.

26. *Liens*—Charges, security interests, or encumbrances upon Contract-related funds, real property, or personal property.

27. *Milestone*—A principal event in the performance of the Work that the Contract requires Contractor to achieve by an intermediate completion date, or by a time prior to Substantial Completion of all the Work.

28. *Notice of Award*—The written notice by Owner to a Bidder of Owner's acceptance of the Bid.

29. *Notice to Proceed*—A written notice by Owner to Contractor fixing the date on which the Contract Times will commence to run and on which Contractor shall start to perform the Work.

30. *Owner*—The individual or entity with which Contractor has contracted regarding the Work, and which has agreed to pay Contractor for the performance of the Work, pursuant to the terms of the Contract.

31. *Progress Schedule*—A schedule, prepared and maintained by Contractor, describing the sequence and duration of the activities comprising Contractor's plan to accomplish the Work within the Contract Times.

32. *Project*—The total undertaking to be accomplished for Owner by engineers, contractors, and others, including planning, study, design, construction, testing, commissioning, and start-up, and of which the Work to be performed under the Contract Documents is a part.

Copyright© 2018 National Society of Professional Engineers, American Council of Engineering Companies, and American Society of Civil Engineers. All rights reserved.

33. *Resident Project Representative*—The authorized representative of Engineer assigned to assist Engineer at the Site. As used herein, the term Resident Project Representative (RPR) includes any assistants or field staff of Resident Project Representative.

34. *Samples*—Physical examples of materials, equipment, or workmanship that are representative of some portion of the Work and that establish the standards by which such portion of the Work will be judged.

35. *Schedule of Submittals*—A schedule, prepared and maintained by Contractor, of required submittals and the time requirements for Engineer's review of the submittals.

36. *Schedule of Values*—A schedule, prepared and maintained by Contractor, allocating portions of the Contract Price to various portions of the Work and used as the basis for reviewing Contractor's Applications for Payment.

37. *Shop Drawings*—All drawings, diagrams, illustrations, schedules, and other data or information that are specifically prepared or assembled by or for Contractor and submitted by Contractor to illustrate some portion of the Work. Shop Drawings, whether approved or not, are not Drawings and are not Contract Documents.

38. *Site*—Lands or areas indicated in the Contract Documents as being furnished by Owner upon which the Work is to be performed, including rights-of-way and easements, and such other lands or areas furnished by Owner which are designated for the use of Contractor.

39. *Specifications*—The part of the Contract that consists of written requirements for materials, equipment, systems, standards, and workmanship as applied to the Work, and certain administrative requirements and procedural matters applicable to the Work.

40. *Subcontractor*—An individual or entity having a direct contract with Contractor or with any other Subcontractor for the performance of a part of the Work.

41. *Submittal*—A written or graphic document, prepared by or for Contractor, which the Contract Documents require Contractor to submit to Engineer, or that is indicated as a Submittal in the Schedule of Submittals accepted by Engineer. Submittals may include Shop Drawings and Samples; schedules; product data; Owner-delegated designs; sustainable design information; information on special procedures; testing plans; results of tests and evaluations, source quality-control testing and inspections, and field or Site quality-control testing and inspections; warranties and certifications; Suppliers' instructions and reports; records of delivery of spare parts and tools; operations and maintenance data; Project photographic documentation; record documents; and other such documents required by the Contract Documents. Submittals, whether or not approved or accepted by Engineer, are not Contract Documents. Change Proposals, Change Orders, Claims, notices, Applications for Payment, and requests for interpretation or clarification are not Submittals.

42. *Substantial Completion*—The time at which the Work (or a specified part thereof) has progressed to the point where, in the opinion of Engineer, the Work (or a specified part thereof) is sufficiently complete, in accordance with the Contract Documents, so that the Work (or a specified part thereof) can be utilized for the purposes for which it is intended. The terms "substantially complete" and "substantially completed" as applied to all or part of the Work refer to Substantial Completion of such Work.

Copyright© 2018 National Society of Professional Engineers, American Council of Engineering Companies, and American Society of Civil Engineers. All rights reserved.

43. *Successful Bidder*—The Bidder to which the Owner makes an award of contract.

44. *Supplementary Conditions*—If included, the part of the Contract that amends or supplements these General Conditions.

45. *Supplier*—A manufacturer, fabricator, supplier, distributor, or vendor having a direct contract with Contractor or with any Subcontractor to furnish materials or equipment to be incorporated in the Work by Contractor or a Subcontractor.

46. *Technical Data*

    a. Those items expressly identified as Technical Data, with respect to either (1) existing subsurface conditions at or adjacent to the Site, or existing physical conditions at or adjacent to the Site including existing surface or subsurface structures (except Underground Facilities) or (2) Hazardous Environmental Conditions at the Site.

    b. If no such express identifications of Technical Data have been made with respect to conditions at the Site, then Technical Data is defined, with respect to conditions at the Site under Paragraphs 5.03, 5.04, and 5.06, as the data contained in boring logs, recorded measurements of subsurface water levels, assessments of the condition of subsurface facilities, laboratory test results, and other factual, objective information regarding conditions at the Site that are set forth in any geotechnical, environmental, or other Site or facilities conditions report prepared for the Project and made available to Contractor.

    c. Information and data regarding the presence or location of Underground Facilities are not intended to be categorized, identified, or defined as Technical Data, and instead Underground Facilities are shown or indicated on the Drawings.

47. *Underground Facilities*—All active or not-in-service underground lines, pipelines, conduits, ducts, encasements, cables, wires, manholes, vaults, tanks, tunnels, or other such facilities or systems at the Site, including but not limited to those facilities or systems that produce, transmit, distribute, or convey telephone or other communications, cable television, fiber optic transmissions, power, electricity, light, heat, gases, oil, crude oil products, liquid petroleum products, water, steam, waste, wastewater, storm water, other liquids or chemicals, or traffic or other control systems. An abandoned facility or system is not an Underground Facility.

48. *Unit Price Work*—Work to be paid for on the basis of unit prices.

49. *Work*—The entire construction or the various separately identifiable parts thereof required to be provided under the Contract Documents. Work includes and is the result of performing or providing all labor, services, and documentation necessary to produce such construction; furnishing, installing, and incorporating all materials and equipment into such construction; and may include related services such as testing, start-up, and commissioning, all as required by the Contract Documents.

50. *Work Change Directive*—A written directive to Contractor issued on or after the Effective Date of the Contract, signed by Owner and recommended by Engineer, ordering an addition, deletion, or revision in the Work.

Copyright© 2018 National Society of Professional Engineers, American Council of Engineering Companies, and American Society of Civil Engineers. All rights reserved.

1.02 *Terminology*

A. The words and terms discussed in Paragraphs 1.02.B, C, D, and E are not defined terms that require initial capital letters, but, when used in the Bidding Requirements or Contract Documents, have the indicated meaning.

B. *Intent of Certain Terms or Adjectives*: The Contract Documents include the terms "as allowed," "as approved," "as ordered," "as directed" or terms of like effect or import to authorize an exercise of professional judgment by Engineer. In addition, the adjectives "reasonable," "suitable," "acceptable," "proper," "satisfactory," or adjectives of like effect or import are used to describe an action or determination of Engineer as to the Work. It is intended that such exercise of professional judgment, action, or determination will be solely to evaluate, in general, the Work for compliance with the information in the Contract Documents and with the design concept of the Project as a functioning whole as shown or indicated in the Contract Documents (unless there is a specific statement indicating otherwise). The use of any such term or adjective is not intended to and shall not be effective to assign to Engineer any duty or authority to supervise or direct the performance of the Work, or any duty or authority to undertake responsibility contrary to the provisions of Article 10 or any other provision of the Contract Documents.

C. *Day*: The word "day" means a calendar day of 24 hours measured from midnight to the next midnight.

D. *Defective*: The word "defective," when modifying the word "Work," refers to Work that is unsatisfactory, faulty, or deficient in that it:

1. does not conform to the Contract Documents;

2. does not meet the requirements of any applicable inspection, reference standard, test, or approval referred to in the Contract Documents; or

3. has been damaged prior to Engineer's recommendation of final payment (unless responsibility for the protection thereof has been assumed by Owner at Substantial Completion in accordance with Paragraph 15.03 or Paragraph 15.04).

E. *Furnish, Install, Perform, Provide*

1. The word "furnish," when used in connection with services, materials, or equipment, means to supply and deliver said services, materials, or equipment to the Site (or some other specified location) ready for use or installation and in usable or operable condition.

2. The word "install," when used in connection with services, materials, or equipment, means to put into use or place in final position said services, materials, or equipment complete and ready for intended use.

3. The words "perform" or "provide," when used in connection with services, materials, or equipment, means to furnish and install said services, materials, or equipment complete and ready for intended use.

4. If the Contract Documents establish an obligation of Contractor with respect to specific services, materials, or equipment, but do not expressly use any of the four words "furnish," "install," "perform," or "provide," then Contractor shall furnish and install said services, materials, or equipment complete and ready for intended use.

Copyright© 2018 National Society of Professional Engineers, American Council of Engineering Companies, and American Society of Civil Engineers. All rights reserved.

F. *Contract Price or Contract Times*: References to a change in "Contract Price or Contract Times" or "Contract Times or Contract Price" or similar, indicate that such change applies to (1) Contract Price, (2) Contract Times, or (3) both Contract Price and Contract Times, as warranted, even if the term "or both" is not expressed.

G. Unless stated otherwise in the Contract Documents, words or phrases that have a well-known technical or construction industry or trade meaning are used in the Contract Documents in accordance with such recognized meaning.

ARTICLE 2—PRELIMINARY MATTERS

2.01 *Delivery of Performance and Payment Bonds; Evidence of Insurance*

A. *Performance and Payment Bonds*: When Contractor delivers the signed counterparts of the Agreement to Owner, Contractor shall also deliver to Owner the performance bond and payment bond (if the Contract requires Contractor to furnish such bonds).

B. *Evidence of Contractor's Insurance*: When Contractor delivers the signed counterparts of the Agreement to Owner, Contractor shall also deliver to Owner, with copies to each additional insured (as identified in the Contract), the certificates, endorsements, and other evidence of insurance required to be provided by Contractor in accordance with Article 6, except to the extent the Supplementary Conditions, if included, expressly establish other dates for delivery of specific insurance policies.

C. *Evidence of Owner's Insurance*: After receipt of the signed counterparts of the Agreement and all required bonds and insurance documentation, Owner shall promptly deliver to Contractor, with copies to each additional insured (as identified in the Contract), the certificates and other evidence of insurance required to be provided by Owner under Article 6.

2.02 *Copies of Documents*

A. Owner shall furnish to Contractor one printed copy of the Contract (including one fully signed counterpart of the Agreement), and one copy in electronic portable document format (PDF). Additional printed copies will be furnished upon request at the cost of reproduction.

B. Owner shall maintain and safeguard at least one original printed record version of the Contract, including Drawings and Specifications signed and sealed by Engineer and other design professionals. Owner shall make such original printed record version of the Contract available to Contractor for review. Owner may delegate the responsibilities under this provision to Engineer.

2.03 *Before Starting Construction*

A. *Preliminary Schedules*: Within 10 days after the Effective Date of the Contract (or as otherwise required by the Contract Documents), Contractor shall submit to Engineer for timely review:

1. a preliminary Progress Schedule indicating the times (numbers of days or dates) for starting and completing the various stages of the Work, including any Milestones specified in the Contract;

2. a preliminary Schedule of Submittals; and

3. a preliminary Schedule of Values for all of the Work which includes quantities and prices of items which when added together equal the Contract Price and subdivides the Work

Copyright© 2018 National Society of Professional Engineers, American Council of Engineering Companies, and American Society of Civil Engineers. All rights reserved.

into component parts in sufficient detail to serve as the basis for progress payments during performance of the Work. Such prices will include an appropriate amount of overhead and profit applicable to each item of Work.

2.04 *Preconstruction Conference; Designation of Authorized Representatives*

A. Before any Work at the Site is started, a conference attended by Owner, Contractor, Engineer, and others as appropriate will be held to establish a working understanding among the parties as to the Work, and to discuss the schedules referred to in Paragraph 2.03.A, procedures for handling Shop Drawings, Samples, and other Submittals, processing Applications for Payment, electronic or digital transmittals, and maintaining required records.

B. At this conference Owner and Contractor each shall designate, in writing, a specific individual to act as its authorized representative with respect to the services and responsibilities under the Contract. Such individuals shall have the authority to transmit and receive information, render decisions relative to the Contract, and otherwise act on behalf of each respective party.

2.05 *Acceptance of Schedules*

A. At least 10 days before submission of the first Application for Payment schedules shall be submitted for review in accordance with Paragraph 2.03.A. No progress payment will be made to Contractor until acceptable schedules are submitted to Engineer.

1. The Progress Schedule will be acceptable to Engineer if it provides an orderly progression of the Work to completion within the Contract Times. Such acceptance will not impose on Engineer responsibility for the Progress Schedule, for sequencing, scheduling, or progress of the Work, nor interfere with or relieve Contractor from Contractor's full responsibility therefor.

2. Contractor's Schedule of Submittals will be acceptable to Engineer if it provides a workable arrangement for reviewing and processing the required submittals.

3. Contractor's Schedule of Values will be acceptable to Engineer as to form and substance if it provides a reasonable allocation of the Contract Price to the component parts of the Work.

4. If a schedule is not acceptable, Contractor will have an additional 10 days to revise and resubmit the schedule.

2.06 *Electronic Transmittals*

A. Except as otherwise stated elsewhere in the Contract, the Owner, Engineer, and Contractor may send, and shall accept, Electronic Documents transmitted by Electronic Means.

B. *Electronic Documents Protocol:* The parties shall conform to the following provisions in Paragraphs 2.06.B and 2.06.C, together referred to as the Electronic Documents Protocol ("EDP" or "Protocol") for exchange of electronic transmittals.

1. *Basic Requirements*

a. To the fullest extent practical, the parties agree to and will transmit and accept Electronic Documents in an electronic or digital format using the procedures described in this Protocol. Use of the Electronic Documents and any information

Copyright© 2018 National Society of Professional Engineers, American Council of Engineering Companies, and American Society of Civil Engineers. All rights reserved.

contained therein is subject to the requirements of this Protocol and other provisions of the Contract.

b. The contents of the information in any Electronic Document will be the responsibility of the transmitting party.

c. Electronic Documents as exchanged by this Protocol may be used in the same manner as the printed versions of the same documents that are exchanged using non-electronic format and methods, subject to the same governing requirements, limitations, and restrictions, set forth in the Contract Documents.

d. Except as otherwise explicitly stated herein, the terms of this Protocol will be incorporated into any other agreement or subcontract between a party and any third party for any portion of the Work on the Project, or any Project-related services, where that third party is, either directly or indirectly, required to exchange Electronic Documents with a party or with Engineer. Nothing herein will modify the requirements of the Contract regarding communications between and among the parties and their subcontractors and consultants.

e. When transmitting Electronic Documents, the transmitting party makes no representations as to long term compatibility, usability, or readability of the items resulting from the receiving party's use of software application packages, operating systems, or computer hardware differing from those established in this Protocol.

f. Nothing herein negates any obligation 1) in the Contract to create, provide, or maintain an original printed record version of Drawings and Specifications, signed and sealed according to applicable Laws and Regulations; 2) to comply with any applicable Law or Regulation governing the signing and sealing of design documents or the signing and electronic transmission of any other documents; or 3) to comply with the notice requirements of Paragraph 18.01 of the General Conditions.

2. *System Infrastructure for Electronic Document Exchange*

a. Each party will provide hardware, operating system(s) software, internet, e-mail, and large file transfer functions ("System Infrastructure") at its own cost and sufficient for complying with the EDP requirements. With the exception of minimum standards set forth in this EDP, and any explicit system requirements specified by attachment to this EDP, it is the obligation of each party to determine, for itself, its own System Infrastructure.

b. The maximum size of an email attachment for exchange of Electronic Documents under this EDP is **20** MB. Attachments larger than that may be exchanged using large file transfer functions or physical media.

c. Each Party assumes full and complete responsibility for any and all of its own costs, delays, deficiencies, and errors associated with converting, translating, updating, verifying, licensing, or otherwise enabling its System Infrastructure, including operating systems and software, for use with respect to this EDP.

d. Each party is responsible for its own system operations, security, back-up, archiving, audits, printing resources, and other Information Technology ("IT") for maintaining operations of its System Infrastructure during the Project, including coordination with the party's individual(s) or entity responsible for managing its System Infrastructure

Copyright© 2018 National Society of Professional Engineers, American Council of Engineering Companies, and American Society of Civil Engineers. All rights reserved.

and capable of addressing routine communications and other IT issues affecting the exchange of Electronic Documents.

e. Each party will operate and maintain industry-standard, industry-accepted, ISO standard, commercial-grade security software and systems that are intended to protect the other party from: software viruses and other malicious software like worms, trojans, adware; data breaches; loss of confidentiality; and other threats in the transmission to or storage of information from the other parties, including transmission of Electronic Documents by physical media such as CD/DVD/flash drive/hard drive. To the extent that a party maintains and operates such security software and systems, it shall not be liable to the other party for any breach of system security.

f. In the case of disputes, conflicts, or modifications to the EDP required to address issues affecting System Infrastructure, the parties shall cooperatively resolve the issues; but, failing resolution, the Owner is authorized to make and require reasonable and necessary changes to the EDP to effectuate its original intent. If the changes cause additional cost or time to Contractor, not reasonably anticipated under the original EDP, Contractor may seek an adjustment in price or time under the appropriate process in the Contract.

g. Each party is responsible for its own back-up and archive of documents sent and received during the term of the contract under this EDP, unless this EDP establishes a Project document archive, either as part of a mandatory Project website or other communications protocol, upon which the parties may rely for document archiving during the specified term of operation of such Project document archive. Further, each party remains solely responsible for its own post-Project back-up and archive of Project documents after the term of the Contract, or after termination of the Project document archive, if one is established, for as long as required by the Contract and as each party deems necessary for its own purposes.

h. If a receiving party receives an obviously corrupted, damaged, or unreadable Electronic Document, the receiving party will advise the sending party of the incomplete transmission.

i. The parties will bring any non-conforming Electronic Documents into compliance with the EDP. The parties will attempt to complete a successful transmission of the Electronic Document or use an alternative delivery method to complete the communication.

C. *Software Requirements for Electronic Document Exchange; Limitations*

a. Each party will acquire the software and software licenses necessary to create and transmit Electronic Documents and to read and to use any Electronic Documents received from the other party (and if relevant from third parties), using the software formats required in this section of the EDP.

b. Prior to using any updated version of the software required in this section for sending Electronic Documents to the other party, the originating party will first notify and receive concurrence from the other party for use of the updated version or adjust its transmission to comply with this EDP.

Copyright© 2018 National Society of Professional Engineers, American Council of Engineering Companies, and American Society of Civil Engineers. All rights reserved.

c. The parties agree not to intentionally edit, reverse engineer, decrypt, remove security or encryption features, or convert to another format for modification purposes any Electronic Document or information contained therein that was transmitted in a software data format, including Portable Document Format (PDF), intended by sender not to be modified, unless the receiving party obtains the permission of the sending party or is citing or quoting excerpts of the Electronic Document for Project purposes.

d. Software and data formats for exchange of Electronic Documents will conform to the requirements set forth in Exhibit A to this EDP, including software versions, if listed.

D. *Requests by Contractor for Electronic Documents in Other Formats*

a. Release of any Electronic Document versions of the Project documents in formats other than those identified in the Electronic Documents Protocol (if any) or elsewhere in the Contract will be at the sole discretion of the Owner.

b. To extent determined by Owner, in its sole discretion, to be prudent and necessary, release of Electronic Documents versions of Project documents and other Project information requested by Contractor ("Request") in formats other than those identified in the Electronic Documents Protocol (if any) or elsewhere in the Contract will be subject to the provisions of the Owner's response to the Request, and to the following conditions to which Contractor agrees:

c. The content included in the Electronic Documents created by Engineer and covered by the Request was prepared by Engineer as an internal working document for Engineer's purposes solely, and is being provided to Contractor on an "AS IS" basis without any warranties of any kind, including, but not limited to any implied warranties of fitness for any purpose. As such, Contractor is advised and acknowledges that the content may not be suitable for Contractor's application, or may require substantial modification and independent verification by Contractor. The content may include limited resolution of models, not-to-scale schematic representations and symbols, use of notes to convey design concepts in lieu of accurate graphics, approximations, graphical simplifications, undocumented intermediate revisions, and other devices that may affect subsequent reuse.

d. Electronic Documents containing text, graphics, metadata, or other types of data that are provided by Engineer to Contractor under the request are only for convenience of Contractor. Any conclusion or information obtained or derived from such data will be at the Contractor's sole risk and the Contractor waives any claims against Engineer or Owner arising from use of data in Electronic Documents covered by the Request.

e. Contractor shall indemnify and hold harmless Owner and Engineer and their subconsultants from all claims, damages, losses, and expenses, including attorneys' fees and defense costs arising out of or resulting from Contractor's use, adaptation, or distribution of any Electronic Documents provided under the Request.

f. Contractor agrees not to sell, copy, transfer, forward, give away or otherwise distribute this information (in source or modified file format) to any third party without the direct written authorization of Engineer, unless such distribution is specifically identified in the Request and is limited to Contractor's subcontractors. Contractor warrants that

Copyright© 2018 National Society of Professional Engineers, American Council of Engineering Companies, and American Society of Civil Engineers. All rights reserved.

subsequent use by Contractor's subcontractors complies with all terms of the Contract Documents and Owner's response to Request.

g. In the event that Owner elects to provide or directs the Engineer to provide to Contractor any Contractor-requested Electronic Document versions of Project information that is not explicitly identified in the Contract Documents as being available to Contractor, the Owner shall be reimbursed by Contractor on an hourly basis (at $**150** per hour) for any engineering costs necessary to create or otherwise prepare the data in a manner deemed appropriate by Engineer.

ARTICLE 3—CONTRACT DOCUMENTS: INTENT, REQUIREMENTS, REUSE

3.01 *Intent*

A. The Contract Documents are complementary; what is required by one Contract Document is as binding as if required by all.

B. It is the intent of the Contract Documents to describe a functionally complete Project (or part thereof) to be constructed in accordance with the Contract Documents.

C. Unless otherwise stated in the Contract Documents, if there is a discrepancy between the electronic versions of the Contract Documents (including any printed copies derived from such electronic versions) and the printed record version, the printed record version will govern.

D. The Contract supersedes prior negotiations, representations, and agreements, whether written or oral.

E. Engineer will issue clarifications and interpretations of the Contract Documents as provided herein.

F. Any provision or part of the Contract Documents held to be void or unenforceable under any Law or Regulation will be deemed stricken, and all remaining provisions will continue to be valid and binding upon Owner and Contractor, which agree that the Contract Documents will be reformed to replace such stricken provision or part thereof with a valid and enforceable provision that comes as close as possible to expressing the intention of the stricken provision.

G. Nothing in the Contract Documents creates:

1. any contractual relationship between Owner or Engineer and any Subcontractor, Supplier, or other individual or entity performing or furnishing any of the Work, for the benefit of such Subcontractor, Supplier, or other individual or entity; or

2. any obligation on the part of Owner or Engineer to pay or to see to the payment of any money due any such Subcontractor, Supplier, or other individual or entity, except as may otherwise be required by Laws and Regulations.

3.02 *Reference Standards*

A. *Standards Specifications, Codes, Laws and Regulations*

1. Reference in the Contract Documents to standard specifications, manuals, reference standards, or codes of any technical society, organization, or association, or to Laws or Regulations, whether such reference be specific or by implication, means the standard

Copyright© 2018 National Society of Professional Engineers, American Council of Engineering Companies, and American Society of Civil Engineers. All rights reserved.

specification, manual, reference standard, code, or Laws or Regulations in effect at the time of opening of Bids (or on the Effective Date of the Contract if there were no Bids), except as may be otherwise specifically stated in the Contract Documents.

2. No provision of any such standard specification, manual, reference standard, or code, and no instruction of a Supplier, will be effective to change the duties or responsibilities of Owner, Contractor, or Engineer from those set forth in the part of the Contract Documents prepared by or for Engineer. No such provision or instruction shall be effective to assign to Owner or Engineer any duty or authority to supervise or direct the performance of the Work, or any duty or authority to undertake responsibility inconsistent with the provisions of the part of the Contract Documents prepared by or for Engineer.

3.03 *Reporting and Resolving Discrepancies*

A. *Reporting Discrepancies*

1. *Contractor's Verification of Figures and Field Measurements*: Before undertaking each part of the Work, Contractor shall carefully study the Contract Documents, and check and verify pertinent figures and dimensions therein, particularly with respect to applicable field measurements. Contractor shall promptly report in writing to Engineer any conflict, error, ambiguity, or discrepancy that Contractor discovers, or has actual knowledge of, and shall not proceed with any Work affected thereby until the conflict, error, ambiguity, or discrepancy is resolved by a clarification or interpretation by Engineer, or by an amendment or supplement to the Contract issued pursuant to Paragraph 11.01.

2. *Contractor's Review of Contract Documents*: If, before or during the performance of the Work, Contractor discovers any conflict, error, ambiguity, or discrepancy within the Contract Documents, or between the Contract Documents and (a) any applicable Law or Regulation, (b) actual field conditions, (c) any standard specification, manual, reference standard, or code, or (d) any instruction of any Supplier, then Contractor shall promptly report it to Engineer in writing. Contractor shall not proceed with the Work affected thereby (except in an emergency as required by Paragraph 7.15) until the conflict, error, ambiguity, or discrepancy is resolved, by a clarification or interpretation by Engineer, or by an amendment or supplement to the Contract issued pursuant to Paragraph 11.01.

3. Contractor shall not be liable to Owner or Engineer for failure to report any conflict, error, ambiguity, or discrepancy in the Contract Documents unless Contractor had actual knowledge thereof.

4. In case of conflict or inconsistency between the DRAWINGS and SPECIFICATIONS, the SPECIFICATIONS shall govern. Figure dimensions on DRAWINGS shall govern over scale dimensions, and detailed DRAWINGS shall govern over general DRAWINGS.

5. Any discrepancies found between the DRAWINGS and SPECIFICATIONS and site conditions or inconsistencies or ambiguities in the DRAWINGS or SPECIFICATIONS shall be immediately reported to the ENGINEER, in writing, who shall promptly correct such inconsistencies or ambiguities in writing. WORK done by the CONTRACTOR after his discovery of such discrepancies, inconsistencies or ambiguities shall be done at the CONTRACTOR'S risk. Notwithstanding the foregoing, to the extent the contractor failed to bring to the engineer's attention in writing such ambiguities or inconsistencies at least seven days prior to the opening of the bid as set forth in the bid invitation, all claims for

Copyright© 2018 National Society of Professional Engineers, American Council of Engineering Companies, and American Society of Civil Engineers. All rights reserved.

damages relating to such inconsistencies or ambiguities shall be deemed irrevocably waived.

6. *Plans And Specifications* - The CONTRACTOR shall keep at the site of the WORK one copy of the PLANS and SPECIFICATIONS and shall at all times give the ENGINEER and other representatives of the OWNER access thereto

B. *Resolving Discrepancies*

1. Except as may be otherwise specifically stated in the Contract Documents, the provisions of the part of the Contract Documents prepared by or for Engineer take precedence in resolving any conflict, error, ambiguity, or discrepancy between such provisions of the Contract Documents and:

   a. the provisions of any standard specification, manual, reference standard, or code, or the instruction of any Supplier (whether or not specifically incorporated by reference as a Contract Document); or

   b. the provisions of any Laws or Regulations applicable to the performance of the Work (unless such an interpretation of the provisions of the Contract Documents would result in violation of such Law or Regulation).

3.04 *Requirements of the Contract Documents*

A. During the performance of the Work and until final payment, Contractor and Owner shall submit to the Engineer in writing all matters in question concerning the requirements of the Contract Documents (sometimes referred to as requests for information or interpretation—RFIs), or relating to the acceptability of the Work under the Contract Documents, as soon as possible after such matters arise. Engineer will be the initial interpreter of the requirements of the Contract Documents, and judge of the acceptability of the Work.

B. Engineer will, with reasonable promptness, render a written clarification, interpretation, or decision on the issue submitted, or initiate an amendment or supplement to the Contract Documents. Engineer's written clarification, interpretation, or decision will be final and binding on Contractor, unless it appeals by submitting a Change Proposal, and on Owner, unless it appeals by filing a Claim.

C. If a submitted matter in question concerns terms and conditions of the Contract Documents that do not involve (1) the performance or acceptability of the Work under the Contract Documents, (2) the design (as set forth in the Drawings, Specifications, or otherwise), or (3) other engineering or technical matters, then Engineer will promptly notify Owner and Contractor in writing that Engineer is unable to provide a decision or interpretation. If Owner and Contractor are unable to agree on resolution of such a matter in question, either party may pursue resolution as provided in Article 12.

D. The CONTRACTOR may be furnished additional instructions and detail drawings, by the ENGINEER, as necessary to carry out the WORK required by the CONTRACT DOCUMENTS. The additional drawings and instruction thus supplied will become a part of the CONTRACT DOCUMENTS and shall have the same force and effect as any other Contract Documents. The CONTRACTOR shall carry out the WORK in accordance with the additional detail drawings and instructions.

E. In case the Contractor finds the Specifications or Contract Drawings are not sufficiently clear or complete, he shall request the Engineer to provide such Supplementary Drawings and

Copyright© 2018 National Society of Professional Engineers, American Council of Engineering Companies, and American Society of Civil Engineers. All rights reserved.

Specifications and the Engineer will provide such additional information as may be necessary. Such request shall be made in writing at least two (2) weeks prior to the time such Drawings or Specifications are to be needed or the work to be performed, and no delay caused by the tardiness of the Engineer in supplying such information shall be considered as neglect or default on his part unless written request as noted shall have been so made.

3.05 *Reuse of Documents*

A. Contractor and its Subcontractors and Suppliers shall not:

1. have or acquire any title to or ownership rights in any of the Drawings, Specifications, or other documents (or copies of any thereof) prepared by or bearing the seal of Engineer or its consultants, including electronic media versions, or reuse any such Drawings, Specifications, other documents, or copies thereof on extensions of the Project or any other project without written consent of Owner and Engineer and specific written verification or adaptation by Engineer; or

2. have or acquire any title or ownership rights in any other Contract Documents, reuse any such Contract Documents for any purpose without Owner's express written consent, or violate any copyrights pertaining to such Contract Documents.

B. The prohibitions of this Paragraph 3.05 will survive final payment, or termination of the Contract. Nothing herein precludes Contractor from retaining copies of the Contract Documents for record purposes.

ARTICLE 4—COMMENCEMENT AND PROGRESS OF THE WORK

4.01 *Commencement of Contract Times; Notice to Proceed*

A. The Contract Times will commence on the day indicated in the Notice to Proceed. A Notice to Proceed may be given at any time within 30 days after the Effective Date of the Contract.

4.02 *Starting the Work*

A. Contractor shall start to perform the Work on the date when the Contract Times commence to run. No Work may be done at the Site prior to such date.

4.03 *Reference Points*

A. Owner shall provide engineering surveys to establish reference points for construction which in Engineer's judgment are necessary to enable Contractor to proceed with the Work. Contractor shall be responsible for laying out the Work, shall protect and preserve the established reference points and property monuments, and shall make no changes or relocations without the prior written approval of Owner. Contractor shall report to Engineer whenever any reference point or property monument is lost or destroyed or requires relocation because of necessary changes in grades or locations, and shall be responsible for the accurate replacement or relocation of such reference points or property monuments by professionally qualified personnel.

The CONTRACTOR shall carefully preserve bench marks, reference points and stakes and, in the case of willful or careless destruction, he shall be charged with the resulting expense and shall be responsible for any mistakes that may be caused by their unnecessary loss or disturbance.

Copyright© 2018 National Society of Professional Engineers, American Council of Engineering Companies, and American Society of Civil Engineers. All rights reserved.

Permits and licenses of a temporary nature necessary for the prosecution of the WORK shall be secured and paid for by the CONTRACTOR unless otherwise stated in the SUPPLEMENTAL GENERAL CONDITIONS. Permits, licenses and easements for permanent structures or permanent changes in the existing facilities shall be secured and paid for by the OWNER, unless otherwise specified. The CONTRACTOR shall give all notices and comply with all laws, ordinances, rules and regulations bearing on the conduct of the WORK as drawn and specified. If the CONTRACTOR observes that the CONTRACT DOCUMENTS are at variance therewith, he shall promptly notify the ENGINEER in writing, and any necessary changes shall be adjusted

4.04 *Progress Schedule*

A. Contractor shall adhere to the Progress Schedule established in accordance with Paragraph 2.05 as it may be adjusted from time to time as provided below.

1. Contractor shall submit to Engineer for acceptance (to the extent indicated in Paragraph 2.05) proposed adjustments in the Progress Schedule that will not result in changing the Contract Times.

2. Proposed adjustments in the Progress Schedule that will change the Contract Times must be submitted in accordance with the requirements of Article 11.

B. Contractor shall carry on the Work and adhere to the Progress Schedule during all disputes or disagreements with Owner. No Work will be delayed or postponed pending resolution of any disputes or disagreements, or during any appeal process, except as permitted by Paragraph 16.04, or as Owner and Contractor may otherwise agree in writing.

4.05 *Delays in Contractor's Progress*

A. If Owner, Engineer, or anyone for whom Owner is responsible, delays, disrupts, or interferes with the performance or progress of the Work, then Contractor shall be entitled to an equitable adjustment in Contract Price or Contract Times.

B. Contractor shall not be entitled to an adjustment in Contract Price or Contract Times for delay, disruption, or interference caused by or within the control of Contractor. Delay, disruption, and interference attributable to and within the control of a Subcontractor or Supplier shall be deemed to be within the control of Contractor.

C. If Contractor's performance or progress is delayed, disrupted, or interfered with by unanticipated causes not the fault of and beyond the control of Owner, Contractor, and those for which they are responsible, then Contractor shall be entitled to an equitable adjustment in Contract Times. Such an adjustment will be Contractor's sole and exclusive remedy for the delays, disruption, and interference described in this paragraph. Causes of delay, disruption, or interference that may give rise to an adjustment in Contract Times under this paragraph include but are not limited to the following:

1. Severe and unavoidable natural catastrophes such as fires, floods, epidemics, and earthquakes;

2. Abnormal weather conditions;

3. Acts or failures to act of third-party utility owners or other third-party entities (other than those third-party utility owners or other third-party entities performing other work at or adjacent to the Site as arranged by or under contract with Owner, as contemplated in Article 8); and

Copyright© 2018 National Society of Professional Engineers, American Council of Engineering Companies, and American Society of Civil Engineers. All rights reserved.

4. Acts of war or terrorism.

D. Contractor's entitlement to an adjustment of Contract Times or Contract Price is limited as follows:

1. Contractor's entitlement to an adjustment of the Contract Times is conditioned on the delay, disruption, or interference adversely affecting an activity on the critical path to completion of the Work, as of the time of the delay, disruption, or interference.

2. Contractor shall not be entitled to an adjustment in Contract Price for any delay, disruption, or interference if such delay is concurrent with a delay, disruption, or interference caused by or within the control of Contractor. Such a concurrent delay by Contractor shall not preclude an adjustment of Contract Times to which Contractor is otherwise entitled.

3. Adjustments of Contract Times or Contract Price are subject to the provisions of Article 11.

E. Each Contractor request or Change Proposal seeking an increase in Contract Times or Contract Price must be supplemented by supporting data that sets forth in detail the following:

1. The circumstances that form the basis for the requested adjustment;

2. The date upon which each cause of delay, disruption, or interference began to affect the progress of the Work;

3. The date upon which each cause of delay, disruption, or interference ceased to affect the progress of the Work;

4. The number of days' increase in Contract Times claimed as a consequence of each such cause of delay, disruption, or interference; and

5. The impact on Contract Price, in accordance with the provisions of Paragraph 11.07.

Contractor shall also furnish such additional supporting documentation as Owner or Engineer may require including, where appropriate, a revised progress schedule indicating all the activities affected by the delay, disruption, or interference, and an explanation of the effect of the delay, disruption, or interference on the critical path to completion of the Work.

F. Delays, disruption, and interference to the performance or progress of the Work resulting from the existence of a differing subsurface or physical condition, an Underground Facility that was not shown or indicated by the Contract Documents, or not shown or indicated with reasonable accuracy, and those resulting from Hazardous Environmental Conditions, are governed by Article 5, together with the provisions of Paragraphs 4.05.D and 4.05.E.

G. Paragraph 8.03 addresses delays, disruption, and interference to the performance or progress of the Work resulting from the performance of certain other work at or adjacent to the Site.

ARTICLE 5—SITE; SUBSURFACE AND PHYSICAL CONDITIONS; HAZARDOUS ENVIRONMENTAL CONDITIONS

5.01 *Availability of Lands*

A. Owner shall furnish the Site. Owner shall notify Contractor in writing of any encumbrances or restrictions not of general application but specifically related to use of the Site with which Contractor must comply in performing the Work.

Copyright© 2018 National Society of Professional Engineers, American Council of Engineering Companies, and American Society of Civil Engineers. All rights reserved.

B. Upon reasonable written request, Owner shall furnish Contractor with a current statement of record legal title and legal description of the lands upon which permanent improvements are to be made and Owner's interest therein as necessary for giving notice of or filing a mechanic's or construction lien against such lands in accordance with applicable Laws and Regulations.

C. Contractor shall provide for all additional lands and access thereto that may be required for temporary construction facilities or storage of materials and equipment.

5.02 *Use of Site and Other Areas*

A. *Limitation on Use of Site and Other Areas*

1. Contractor shall confine construction equipment, temporary construction facilities, the storage of materials and equipment, and the operations of workers to the Site, adjacent areas that Contractor has arranged to use through construction easements or otherwise, and other adjacent areas permitted by Laws and Regulations, and shall not unreasonably encumber the Site and such other adjacent areas with construction equipment or other materials or equipment. Contractor shall assume full responsibility for (a) damage to the Site; (b) damage to any such other adjacent areas used for Contractor's operations; (c) damage to any other adjacent land or areas, or to improvements, structures, utilities, or similar facilities located at such adjacent lands or areas; and (d) for injuries and losses sustained by the owners or occupants of any such land or areas; provided that such damage or injuries result from the performance of the Work or from other actions or conduct of the Contractor or those for which Contractor is responsible.

2. If a damage or injury claim is made by the owner or occupant of any such land or area because of the performance of the Work, or because of other actions or conduct of the Contractor or those for which Contractor is responsible, Contractor shall (a) take immediate corrective or remedial action as required by Paragraph 7.13, or otherwise; (b) promptly attempt to settle the claim as to all parties through negotiations with such owner or occupant, or otherwise resolve the claim by arbitration or other dispute resolution proceeding, or in a court of competent jurisdiction; and (c) to the fullest extent permitted by Laws and Regulations, indemnify and hold harmless Owner and Engineer, and the officers, directors, members, partners, employees, agents, consultants and subcontractors of each and any of them, from and against any such claim, and against all costs, losses, and damages (including but not limited to all fees and charges of engineers, architects, attorneys, and other professionals and all court or arbitration or other dispute resolution costs) arising out of or relating to any claim or action, legal or equitable, brought by any such owner or occupant against Owner, Engineer, or any other party indemnified hereunder to the extent caused directly or indirectly, in whole or in part by, or based upon, Contractor's performance of the Work, or because of other actions or conduct of the Contractor or those for which Contractor is responsible.

B. *Removal of Debris During Performance of the Work*: During the progress of the Work the Contractor shall keep the Site and other adjacent areas free from accumulations of waste materials, rubbish, and other debris. Removal and disposal of such waste materials, rubbish, and other debris will conform to applicable Laws and Regulations.

C. *Cleaning*: Prior to Substantial Completion of the Work Contractor shall clean the Site and the Work and make it ready for utilization by Owner. At the completion of the Work Contractor shall remove from the Site and adjacent areas all tools, appliances, construction equipment

Copyright© 2018 National Society of Professional Engineers, American Council of Engineering Companies, and American Society of Civil Engineers. All rights reserved.

and machinery, and surplus materials and shall restore to original condition all property not designated for alteration by the Contract Documents.

D. *Loading of Structures*: Contractor shall not load nor permit any part of any structure to be loaded in any manner that will endanger the structure, nor shall Contractor subject any part of the Work or adjacent structures or land to stresses or pressures that will endanger them.

5.03 *Subsurface and Physical Conditions*

A. *Reports and Drawings*: The Contract Documents identify:

1. Those reports of explorations and tests of subsurface conditions at or adjacent to the Site that contain Technical Data;

2. Those drawings of existing physical conditions at or adjacent to the Site, including those drawings depicting existing surface or subsurface structures at or adjacent to the Site (except Underground Facilities), that contain Technical Data; and

3. Technical Data contained in such reports and drawings.

B. *Underground Facilities*: Underground Facilities are shown or indicated on the Drawings, pursuant to Paragraph 5.05, and not in the drawings referred to in Paragraph 5.03.A. Information and data regarding the presence or location of Underground Facilities are not intended to be categorized, identified, or defined as Technical Data.

C. *Reliance by Contractor on Technical Data*: Contractor may rely upon the accuracy of the Technical Data expressly identified in the Contract Documents with respect to such reports and drawings, but such reports and drawings are not Contract Documents. If no such express identification has been made, then Contractor may rely upon the accuracy of the Technical Data as defined in Paragraph 1.01.A.46.b.

D. *Limitations of Other Data and Documents*: Except for such reliance on Technical Data, Contractor may not rely upon or make any claim against Owner or Engineer, or any of their officers, directors, members, partners, employees, agents, consultants, or subcontractors, with respect to:

1. the completeness of such reports and drawings for Contractor's purposes, including, but not limited to, any aspects of the means, methods, techniques, sequences, and procedures of construction to be employed by Contractor, and safety precautions and programs incident thereto;

2. other data, interpretations, opinions, and information contained in such reports or shown or indicated in such drawings;

3. the contents of other Site-related documents made available to Contractor, such as record drawings from other projects at or adjacent to the Site, or Owner's archival documents concerning the Site; or

4. any Contractor interpretation of or conclusion drawn from any Technical Data or any such other data, interpretations, opinions, or information.

E. The following table lists the reports of explorations and tests of existing known conditions at or adjacent to the Site that contain Technical Data, and specifically identifies the Technical Data in the report upon which Contractor may rely:

Copyright© 2018 National Society of Professional Engineers, American Council of Engineering Companies, and American Society of Civil Engineers. All rights reserved.

Report Title	Date of Report	Technical Data
Geotechnical Investigation Report	01-15-2020	Geotechnical Engineering
(prepared by Tectonic Engineering)		

5.04 *Differing Subsurface or Physical Conditions*

A. *Notice by Contractor*: If Contractor believes that any subsurface or physical condition that is uncovered or revealed at the Site:

1. is of such a nature as to establish that any Technical Data on which Contractor is entitled to rely as provided in Paragraph 5.03 is materially inaccurate;

2. is of such a nature as to require a change in the Drawings or Specifications;

3. differs materially from that shown or indicated in the Contract Documents; or

4. is of an unusual nature, and differs materially from conditions ordinarily encountered and generally recognized as inherent in work of the character provided for in the Contract Documents;

then Contractor shall, promptly after becoming aware thereof and before further disturbing the subsurface or physical conditions or performing any Work in connection therewith (except in an emergency as required by Paragraph 7.15), notify Owner and Engineer in writing about such condition. Contractor shall not further disturb such condition or perform any Work in connection therewith (except with respect to an emergency) until receipt of a written statement permitting Contractor to do so.

B. *Engineer's Review*: After receipt of written notice as required by the preceding paragraph, Engineer will promptly review the subsurface or physical condition in question; determine whether it is necessary for Owner to obtain additional exploration or tests with respect to the condition; conclude whether the condition falls within any one or more of the differing site condition categories in Paragraph 5.04.A; obtain any pertinent cost or schedule information from Contractor; prepare recommendations to Owner regarding the Contractor's resumption of Work in connection with the subsurface or physical condition in question and the need for any change in the Drawings or Specifications; and advise Owner in writing of Engineer's findings, conclusions, and recommendations.

C. *Owner's Statement to Contractor Regarding Site Condition*: After receipt of Engineer's written findings, conclusions, and recommendations, Owner shall issue a written statement to Contractor (with a copy to Engineer) regarding the subsurface or physical condition in question, addressing the resumption of Work in connection with such condition, indicating whether any change in the Drawings or Specifications will be made, and adopting or rejecting Engineer's written findings, conclusions, and recommendations, in whole or in part.

D. *Early Resumption of Work*: If at any time Engineer determines that Work in connection with the subsurface or physical condition in question may resume prior to completion of Engineer's review or Owner's issuance of its statement to Contractor, because the condition in question has been adequately documented, and analyzed on a preliminary basis, then the Engineer may at its discretion instruct Contractor to resume such Work.

Copyright© 2018 National Society of Professional Engineers, American Council of Engineering Companies, and American Society of Civil Engineers. All rights reserved.

E. *Possible Price and Times Adjustments*

1. Contractor shall be entitled to an equitable adjustment in Contract Price or Contract Times, to the extent that the existence of a differing subsurface or physical condition, or any related delay, disruption, or interference, causes an increase or decrease in Contractor's cost of, or time required for, performance of the Work; subject, however, to the following:

    a. Such condition must fall within any one or more of the categories described in Paragraph 5.04.A;

    b. With respect to Work that is paid for on a unit price basis, any adjustment in Contract Price will be subject to the provisions of Paragraph 13.03; and,

    c. Contractor's entitlement to an adjustment of the Contract Times is subject to the provisions of Paragraphs 4.05.D and 4.05.E.

2. Contractor shall not be entitled to any adjustment in the Contract Price or Contract Times with respect to a subsurface or physical condition if:

    a. Contractor knew of the existence of such condition at the time Contractor made a commitment to Owner with respect to Contract Price and Contract Times by the submission of a Bid or becoming bound under a negotiated contract, or otherwise;

    b. The existence of such condition reasonably could have been discovered or revealed as a result of any examination, investigation, exploration, test, or study of the Site and contiguous areas expressly required by the Bidding Requirements or Contract Documents to be conducted by or for Contractor prior to Contractor's making such commitment; or

    c. Contractor failed to give the written notice required by Paragraph 5.04.A.

3. If Owner and Contractor agree regarding Contractor's entitlement to and the amount or extent of any adjustment in the Contract Price or Contract Times, then any such adjustment will be set forth in a Change Order.

4. Contractor may submit a Change Proposal regarding its entitlement to or the amount or extent of any adjustment in the Contract Price or Contract Times, no later than 30 days after Owner's issuance of the Owner's written statement to Contractor regarding the subsurface or physical condition in question.

F. *Underground Facilities; Hazardous Environmental Conditions*: Paragraph 5.05 governs rights and responsibilities regarding the presence or location of Underground Facilities. Paragraph 5.06 governs rights and responsibilities regarding Hazardous Environmental Conditions. The provisions of Paragraphs 5.03 and 5.04 are not applicable to the presence or location of Underground Facilities, or to Hazardous Environmental Conditions.

5.05 *Underground Facilities*

A. *Contractor's Responsibilities*: Unless it is otherwise expressly provided in the Contract Documents, the cost of all of the following are included in the Contract Price, and Contractor shall have full responsibility for:

1. reviewing and checking all information and data regarding existing Underground Facilities at the Site;

Copyright© 2018 National Society of Professional Engineers, American Council of Engineering Companies, and American Society of Civil Engineers. All rights reserved.

2. complying with applicable state and local utility damage prevention Laws and Regulations;

3. verifying the actual location of those Underground Facilities shown or indicated in the Contract Documents as being within the area affected by the Work, by exposing such Underground Facilities during the course of construction;

4. coordination of the Work with the owners (including Owner) of such Underground Facilities, during construction; and

5. the safety and protection of all existing Underground Facilities at the Site, and repairing any damage thereto resulting from the Work.

B. *Notice by Contractor*: If Contractor believes that an Underground Facility that is uncovered or revealed at the Site was not shown or indicated on the Drawings, or was not shown or indicated on the Drawings with reasonable accuracy, then Contractor shall, promptly after becoming aware thereof and before further disturbing conditions affected thereby or performing any Work in connection therewith (except in an emergency as required by Paragraph 7.15), notify Owner and Engineer in writing regarding such Underground Facility.

C. *Engineer's Review*: Engineer will:

1. promptly review the Underground Facility and conclude whether such Underground Facility was not shown or indicated on the Drawings, or was not shown or indicated with reasonable accuracy;

2. identify and communicate with the owner of the Underground Facility; prepare recommendations to Owner (and if necessary issue any preliminary instructions to Contractor) regarding the Contractor's resumption of Work in connection with the Underground Facility in question;

3. obtain any pertinent cost or schedule information from Contractor; determine the extent, if any, to which a change is required in the Drawings or Specifications to reflect and document the consequences of the existence or location of the Underground Facility; and

4. advise Owner in writing of Engineer's findings, conclusions, and recommendations.

During such time, Contractor shall be responsible for the safety and protection of such Underground Facility.

D. *Owner's Statement to Contractor Regarding Underground Facility*: After receipt of Engineer's written findings, conclusions, and recommendations, Owner shall issue a written statement to Contractor (with a copy to Engineer) regarding the Underground Facility in question addressing the resumption of Work in connection with such Underground Facility, indicating whether any change in the Drawings or Specifications will be made, and adopting or rejecting Engineer's written findings, conclusions, and recommendations in whole or in part.

E. *Early Resumption of Work*: If at any time Engineer determines that Work in connection with the Underground Facility may resume prior to completion of Engineer's review or Owner's issuance of its statement to Contractor, because the Underground Facility in question and conditions affected by its presence have been adequately documented, and analyzed on a preliminary basis, then the Engineer may at its discretion instruct Contractor to resume such Work.

Copyright© 2018 National Society of Professional Engineers, American Council of Engineering Companies, and American Society of Civil Engineers. All rights reserved.

F. *Possible Price and Times Adjustments*

1. Contractor shall be entitled to an equitable adjustment in the Contract Price or Contract Times, to the extent that any existing Underground Facility at the Site that was not shown or indicated on the Drawings, or was not shown or indicated with reasonable accuracy, or any related delay, disruption, or interference, causes an increase or decrease in Contractor's cost of, or time required for, performance of the Work; subject, however, to the following:

    a. With respect to Work that is paid for on a unit price basis, any adjustment in Contract Price will be subject to the provisions of Paragraph 13.03;

    b. Contractor's entitlement to an adjustment of the Contract Times is subject to the provisions of Paragraphs 4.05.D and 4.05.E; and

    c. Contractor gave the notice required in Paragraph 5.05.B.

2. If Owner and Contractor agree regarding Contractor's entitlement to and the amount or extent of any adjustment in the Contract Price or Contract Times, then any such adjustment will be set forth in a Change Order.

3. Contractor may submit a Change Proposal regarding its entitlement to or the amount or extent of any adjustment in the Contract Price or Contract Times, no later than 30 days after Owner's issuance of the Owner's written statement to Contractor regarding the Underground Facility in question.

4. The information and data shown or indicated on the Drawings with respect to existing Underground Facilities at the Site is based on information and data (a) furnished by the owners of such Underground Facilities, or by others, (b) obtained from available records, or (c) gathered in an investigation conducted in accordance with the current edition of ASCE 38, Standard Guideline for the Collection and Depiction of Existing Subsurface Utility Data, by the American Society of Civil Engineers. If such information or data is incorrect or incomplete, Contractor's remedies are limited to those set forth in this Paragraph 5.05.F.

5.06 *Hazardous Environmental Conditions at Site*

A. *Reports and Drawings*: The Contract Documents identify:

1. those reports known to Owner relating to Hazardous Environmental Conditions that have been identified at or adjacent to the Site;

2. drawings known to Owner relating to Hazardous Environmental Conditions that have been identified at or adjacent to the Site; and

3. Technical Data contained in such reports and drawings.

4. The following table lists the reports known to Owner relating to Hazardous Environmental Conditions at or adjacent to the Site, and the Technical Data (if any) upon which Contractor may rely:

Report Title	**Date of Report**	**Technical Data**
Pre-Demolition/Pre-Renovation Inspection for ACM	05-28-2019	ACM

Copyright© 2018 National Society of Professional Engineers, American Council of Engineering Companies, and American Society of Civil Engineers. All rights reserved.

Report Title	Date of Report	Technical Data
Pre-Construction Survey for ACM, LBP, & PCB	06-25-2024	ACM, LBP, PCB

5. The following table lists the drawings known to Owner relating to Hazardous Environmental Conditions at or adjacent to the Site, and Technical Data (if any) contained in such Drawings upon which Contractor may rely: **[If there are no such drawings, so indicate in the table]**

Drawings Title	Date of Drawings	Technical Data

B. *Reliance by Contractor on Technical Data Authorized*: Contractor may rely upon the accuracy of the Technical Data expressly identified in the Contract Documents with respect to such reports and drawings, but such reports and drawings are not Contract Documents. If no such express identification has been made, then Contractor may rely on the accuracy of the Technical Data as defined in Paragraph 1.01.A.46.b. Except for such reliance on Technical Data, Contractor may not rely upon or make any claim against Owner or Engineer, or any of their officers, directors, members, partners, employees, agents, consultants, or subcontractors, with respect to:

1. the completeness of such reports and drawings for Contractor's purposes, including, but not limited to, any aspects of the means, methods, techniques, sequences and procedures of construction to be employed by Contractor, and safety precautions and programs incident thereto;

2. other data, interpretations, opinions, and information contained in such reports or shown or indicated in such drawings; or

3. any Contractor interpretation of or conclusion drawn from any Technical Data or any such other data, interpretations, opinions or information.

C. Contractor shall not be responsible for removing or remediating any Hazardous Environmental Condition encountered, uncovered, or revealed at the Site unless such removal or remediation is expressly identified in the Contract Documents to be within the scope of the Work.

D. Contractor shall be responsible for controlling, containing, and duly removing all Constituents of Concern brought to the Site by Contractor, Subcontractors, Suppliers, or anyone else for whom Contractor is responsible, and for any associated costs; and for the costs of removing and remediating any Hazardous Environmental Condition created by the presence of any such Constituents of Concern.

E. If Contractor encounters, uncovers, or reveals a Hazardous Environmental Condition whose removal or remediation is not expressly identified in the Contract Documents as being within the scope of the Work, or if Contractor or anyone for whom Contractor is responsible creates a Hazardous Environmental Condition, then Contractor shall immediately: (1) secure or otherwise isolate such condition; (2) stop all Work in connection with such condition and in any area affected thereby (except in an emergency as required by Paragraph 7.15); and (3) notify Owner and Engineer (and promptly thereafter confirm such notice in writing). Owner

Copyright© 2018 National Society of Professional Engineers, American Council of Engineering Companies, and American Society of Civil Engineers. All rights reserved.

shall promptly consult with Engineer concerning the necessity for Owner to retain a qualified expert to evaluate such condition or take corrective action, if any. Promptly after consulting with Engineer, Owner shall take such actions as are necessary to permit Owner to timely obtain required permits and provide Contractor the written notice required by Paragraph 5.06.F. If Contractor or anyone for whom Contractor is responsible created the Hazardous Environmental Condition in question, then Owner may remove and remediate the Hazardous Environmental Condition, and impose a set-off against payments to account for the associated costs.

F. Contractor shall not resume Work in connection with such Hazardous Environmental Condition or in any affected area until after Owner has obtained any required permits related thereto, and delivered written notice to Contractor either (1) specifying that such condition and any affected area is or has been rendered safe for the resumption of Work, or (2) specifying any special conditions under which such Work may be resumed safely.

G. If Owner and Contractor cannot agree as to entitlement to or on the amount or extent, if any, of any adjustment in Contract Price or Contract Times, as a result of such Work stoppage, such special conditions under which Work is agreed to be resumed by Contractor, or any costs or expenses incurred in response to the Hazardous Environmental Condition, then within 30 days of Owner's written notice regarding the resumption of Work, Contractor may submit a Change Proposal, or Owner may impose a set-off. Entitlement to any such adjustment is subject to the provisions of Paragraphs 4.05.D, 4.05.E, 11.07, and 11.08.

H. If, after receipt of such written notice, Contractor does not agree to resume such Work based on a reasonable belief it is unsafe, or does not agree to resume such Work under such special conditions, then Owner may order the portion of the Work that is in the area affected by such condition to be deleted from the Work, following the contractual change procedures in Article 11. Owner may have such deleted portion of the Work performed by Owner's own forces or others in accordance with Article 8.

I. To the fullest extent permitted by Laws and Regulations, Owner shall indemnify and hold harmless Contractor, Subcontractors, and Engineer, and the officers, directors, members, partners, employees, agents, consultants, and subcontractors of each and any of them, from and against all claims, costs, losses, and damages (including but not limited to all fees and charges of engineers, architects, attorneys, and other professionals, and all court, arbitration, or other dispute resolution costs) arising out of or relating to a Hazardous Environmental Condition, provided that such Hazardous Environmental Condition (1) was not shown or indicated in the Drawings, Specifications, or other Contract Documents, identified as Technical Data entitled to limited reliance pursuant to Paragraph 5.06.B, or identified in the Contract Documents to be included within the scope of the Work, and (2) was not created by Contractor or by anyone for whom Contractor is responsible. Nothing in this Paragraph 5.06.I obligates Owner to indemnify any individual or entity from and against the consequences of that individual's or entity's own negligence.

J. To the fullest extent permitted by Laws and Regulations, Contractor shall indemnify and hold harmless Owner and Engineer, and the officers, directors, members, partners, employees, agents, consultants, and subcontractors of each and any of them, from and against all claims, costs, losses, and damages (including but not limited to all fees and charges of engineers, architects, attorneys, and other professionals and all court or arbitration or other dispute resolution costs) arising out of or relating to the failure to control, contain, or remove a

Copyright© 2018 National Society of Professional Engineers, American Council of Engineering Companies, and American Society of Civil Engineers. All rights reserved.

Constituent of Concern brought to the Site by Contractor or by anyone for whom Contractor is responsible, or to a Hazardous Environmental Condition created by Contractor or by anyone for whom Contractor is responsible. Nothing in this Paragraph 5.06.J obligates Contractor to indemnify any individual or entity from and against the consequences of that individual's or entity's own negligence.

K. The provisions of Paragraphs 5.03, 5.04, and 5.05 do not apply to the presence of Constituents of Concern or to a Hazardous Environmental Condition uncovered or revealed at the Site.

ARTICLE 6—BONDS AND INSURANCE

6.01 *Performance, Payment, and Other Bonds*

A. Contractor shall furnish a performance bond and a payment bond, each in an amount at least equal to the Contract Price, as security for the faithful performance and payment of Contractor's obligations under the Contract. These bonds must remain in effect until one year after the date when final payment becomes due or until completion of the correction period specified in Paragraph 15.08, whichever is later, except as provided otherwise by Laws or Regulations, the terms of a prescribed bond form, or other provisions of the Contract.

1. *Required Performance Bond Form:* The performance bond that Contractor furnishes will be in the form of EJCDC® C-610, Performance Bond (2018 edition).

2. *Required Payment Bond Form:* The payment bond that Contractor furnishes will be in the form of EJCDC® C-615, Payment Bond (2018 edition).

B. Contractor shall also furnish such other bonds (if any) as are required by other provisions of the Contract.

C. All bonds must be in the form included in the Bidding Documents or otherwise specified by Owner prior to execution of the Contract, except as provided otherwise by Laws or Regulations, and must be issued and signed by a surety named in "Companies Holding Certificates of Authority as Acceptable Sureties on Federal Bonds and as Acceptable Reinsuring Companies" as published in Department Circular 570 (as amended and supplemented) by the Bureau of the Fiscal Service, U.S. Department of the Treasury. A bond signed by an agent or attorney-in-fact must be accompanied by a certified copy of that individual's authority to bind the surety. The evidence of authority must show that it is effective on the date the agent or attorney-in-fact signed the accompanying bond.

D. Contractor shall obtain the required bonds from surety companies that are duly licensed or authorized, in the state or jurisdiction in which the Project is located, to issue bonds in the required amounts.

E. If the surety on a bond furnished by Contractor is declared bankrupt or becomes insolvent, or the surety ceases to meet the requirements above, then Contractor shall promptly notify Owner and Engineer in writing and shall, within 20 days after the event giving rise to such notification, provide another bond and surety, both of which must comply with the bond and surety requirements above.

F. If Contractor has failed to obtain a required bond, Owner may exclude the Contractor from the Site and exercise Owner's termination rights under Article 16.

G. Upon request to Owner from any Subcontractor, Supplier, or other person or entity claiming to have furnished labor, services, materials, or equipment used in the performance of the Work, Owner shall provide a copy of the payment bond to such person or entity.

Copyright© 2018 National Society of Professional Engineers, American Council of Engineering Companies, and American Society of Civil Engineers. All rights reserved.

H. Upon request to Contractor from any Subcontractor, Supplier, or other person or entity claiming to have furnished labor, services, materials, or equipment used in the performance of the Work, Contractor shall provide a copy of the payment bond to such person or entity.

6.02 *Insurance—General Provisions*

A. Owner and Contractor shall obtain and maintain insurance as required in this article and in the Supplementary Conditions, if attached.

B. All insurance required by the Contract to be purchased and maintained by Owner or Contractor shall be obtained from insurance companies that are duly licensed or authorized in the state or jurisdiction in which the Project is located to issue insurance policies for the required limits and coverages. Unless a different standard is indicated in the other parts of this contract, all companies that provide insurance policies required under this Contract shall have an A.M. Best rating of A- or better.

C. Alternative forms of insurance coverage, including but not limited to self-insurance and "Occupational Accident and Excess Employer's Indemnity Policies," are not sufficient to meet the insurance requirements of this Contract, unless expressly allowed in other parts of this Contract.

D. Contractor shall deliver to Owner, with copies to each additional insured identified in the Contract, certificates of insurance and endorsements establishing that Contractor has obtained and is maintaining the policies and coverages required by the Contract. Upon request by Owner or any other insured, Contractor shall also furnish other evidence of such required insurance, including but not limited to copies of policies, documentation of applicable self-insured retentions (if allowed) and deductibles, full disclosure of all relevant exclusions, and evidence of insurance required to be purchased and maintained by Subcontractors or Suppliers. In any documentation furnished under this provision, Contractor, Subcontractors, and Suppliers may block out (redact) (1) any confidential premium or pricing information and (2) any wording specific to a project or jurisdiction other than those applicable to this Contract.

E. Failure of Contractor to demand such certificates or other evidence of the other party's full compliance with these insurance requirements, or failure of Contractor to identify a deficiency in compliance from the evidence provided, will not be construed as a waiver of the other party's obligation to obtain and maintain such insurance.

F. In addition to the liability insurance required to be provided by Contractor, the Owner, at Owner's option, may purchase and maintain Owner's own liability insurance. Owner's liability policies, if any, operate separately and independently from policies required to be provided by Contractor, and Contractor cannot rely upon Owner's liability policies for any of Contractor's obligations to the Owner, Engineer, or third parties.

G. Contractor shall require:
   1. Subcontractors to purchase and maintain and deliver certificates of insurance to owner for worker's compensation, commercial general liability, and other insurance that is appropriate for their participation in the Project, and to name as additional insureds Owner and Engineer (and any other individuals or entities identified in other parts of this Contract as additional insureds on Contractor's policies) on each Subcontractor's insurance aforementioned policies; and
   2. Suppliers to purchase and maintain insurance that is appropriate for their participation in the Project.

H. If any party does not purchase or maintain the insurance required of such party by the Contract, such party shall notify the other party in writing of such failure to purchase prior to

Copyright© 2018 National Society of Professional Engineers, American Council of Engineering Companies, and American Society of Civil Engineers. All rights reserved.

the start of the Work, or of such failure to maintain prior to any change in the required coverage.

I. If Contractor or any sub contractor has failed to obtain and maintain required insurance, Contractor's entitlement to enter or remain at the Site will end immediately, and Owner may impose an appropriate set-off against payment for any associated costs (including but not limited to the cost of purchasing necessary insurance coverage), and exercise Owner's termination rights under Article 16.

J. Without prejudice to any other right or remedy, if a contractor or subcontractor has failed to obtain required insurance, the Owner may elect (but is in no way obligated) to obtain equivalent insurance to protect its interests at the expense of the party who was required to provide such coverage, and the Contract Price will be adjusted accordingly.

K. Owner does not represent that insurance coverage and limits established in this Contract necessarily will be adequate to protect Contractor or Contractor's interests. Contractor is responsible for determining whether such coverage and limits are adequate to protect its interests, and for obtaining and maintaining any additional insurance that Contractor deems necessary.

L. The insurance and insurance limits required herein will not be deemed as a limitation on Contractor's liability, or that of its Subcontractors or Suppliers, under the indemnities granted to Owner and other individuals and entities in the Contract or otherwise.

M. **Commercial General Liability Notice of Cancellation Endorsement** – Provide a 30-Day Notice of Cancellation Endorsement (*a document separate and apart from the Certificate of Insurance bearing the language necessary to record a change in an insurance policy*) providing "**TOWN OF NEW WINDSOR, 555 UNION AVENUE, NEW WINDSOR, NY 12553**" with a minimum of 30-day notice of cancellation. The policy #s must be typewritten on the endorsements.

6.03 Contractor's Insurance

A. *Required Insurance*: Contractor shall purchase and maintain Worker's Compensation, Commercial General Liability, Disability insurance and other insurance pursuant to the specific requirements of this Contract.

B. *General Provisions*: The policies of insurance required by this Paragraph 6.03 as supplemented must:

1. include at least the specific coverages required;
2. be written for not less than the limits provided, or those required by Laws or Regulations, whichever is greater;
3. remain in effect at least until the Work is complete (as set forth in Paragraph 15.06.D), and longer if expressly required elsewhere in this Contract, and at all times thereafter when Contractor may be correcting, removing, or replacing defective Work as a warranty or correction obligation, or otherwise, or returning to the Site to conduct other tasks arising from the Contract;
4. apply with respect to the performance of the Work, whether such performance is by Contractor, any Subcontractor or Supplier, or by anyone directly or indirectly employed by any of them to perform any of the Work, or by anyone for whose acts any of them may be liable; and
5. include all necessary endorsements to support the stated requirements.
6. County of Orange shall have the option to pay any necessary premiums to keep such insurance in effect and charge the cost back to Municipality.

Copyright© 2018 National Society of Professional Engineers, American Council of Engineering Companies, and American Society of Civil Engineers. All rights reserved.

C. *Additional Insureds*: The Contractor's commercial general liability, automobile liability, employer's liability, umbrella or excess, pollution and environmental liability, and unmanned aerial vehicle liability policies, if required by this Contract, must:

1. include and list as additional insureds Owner and Engineer, and any individuals or entities identified as additional insureds in the Supplementary Conditions, if attached;
2. include coverage for the respective officers, directors, members, partners, employees, and consultants of all such additional insureds;
3. afford primary coverage to these additional insureds for all claims covered thereby (including as applicable those arising from both ongoing and completed operations);
4. not seek contribution from insurance maintained by the additional insured; and
5. as to commercial general liability insurance, apply to additional insureds with respect to liability caused in whole or in part by Contractor's acts or omissions, or the acts and omissions of those working on Contractor's behalf, in the performance of Contractor's operations.

D. *Other Additional Insureds:* As a supplement to the provisions of Paragraph 6.03.C of the General Conditions, the commercial general liability, automobile liability, umbrella or excess, pollution and environmental liability, and unmanned aerial vehicle liability policies must include as additional insureds (in addition to **Town of New Windsor** and **MHE Engineering**) the following: **New York State Environmental Facilities Corporation.**

E. *Workers' Compensation and Employer's Liability:* Contractor shall purchase and maintain workers' compensation and employer's liability insurance, including, as applicable, United States Longshoreman and Harbor Workers' Compensation Act, Jones Act, stop-gap employer's liability coverage for monopolistic states, and foreign voluntary workers' compensation (from available sources, notwithstanding the jurisdictional requirement of Paragraph 6.02.B of the General Conditions).

Workers' Compensation:

State:		Statutory
Employer's Liability:		
Bodily Injury, each Accident	$	1,000,000
Bodily Injury By Disease, each Employee	$	1,000,000
Bodily Injury/Disease Aggregate	$	1,000,000

1. Statutory Coverage for the States in which the Contractors operates for all employees including those statutorily exempt - i.e. - Sole Proprietors, Partners, Limited Liability Members or Executive Officers.

Workers' Compensation and Employers Liability Insurance:

a) Statutory Coverage for all employees including those statutorily exempt – i.e. – Sole Proprietors, Partners, Limited Liability Members or Executive Officers.

b) As required by the New York State Workers Compensation Law, all out of state Contractors

Copyright© 2018 National Society of Professional Engineers, American Council of Engineering Companies, and American Society of Civil Engineers. All rights reserved.

working in New York must provide a Workers Compensation Insurance Policy that specifically lists New York in Item 3A of the Policy Information page. Coverage limits must be at least $1,000,000 each accident for bodily injury by accident and $1,000,000 each employee for injury by disease.

c) Proof of Workers' Compensation and Employer's Liability coverage, in effect during the time work for the Town is undertaken, must be provided on one of the following forms:

FORM #	FORM TITLE
C-105.2	Certificate of Workers' Compensation Insurance (September 2007, or most current version)
U-26.3	State Insurance Fund Version of the C-105.2 form
SI-12/ GSI-105.2	Certificate of Workers' Compensation Self- Insurance
CE-200	Certificate of Attestation of Exemption (when Contractor meets the requirements.)

All of the above referenced forms (except CE-200 and SI-12) must name:**TOWN OF NEW WINDSOR, 555 UNION AVENUE, NEW WINDSOR, NY 12553, MHE ENGINEERING D.P.C, 33 AIRPORT CENTER DRIVE, SUITE 202, NEW WINDSOR, NY 12553 AND COUNTY OF ORANGE C/O OFFICE OF COMMUNITY DEVELOPMENT, 40 MATTHEWS STREET, SUITE 307A, GOSHEN, NY 10924** as the Entity Requesting Proof of Coverage (Entity being listed as the Certificate Holder).

Please note that ACORD forms are NOT acceptable proof of New York State Workers' Compensation Insurance coverage.

Additional information can be obtained at the Workers' Compensation website:
http://www.wcb.ny.gov/content/main/Employers/Employers.jsp

F. *Commercial General Liability—Claims Covered:* Contractor shall purchase and maintain commercial general liability insurance, covering all operations by or on behalf of Contractor, on an occurrence basis, against claims for:

1. damages because of bodily injury, sickness or disease, or death of any person other than Contractor's employees,
2. damages insured by reasonably available personal injury liability coverage, and
3. damages because of injury to or destruction of tangible property wherever located, including loss of use resulting therefrom.

G. *Commercial General Liability—Form and Content:* Contractor's commercial liability policy must be written on a 1996 (or later) Insurance Services Organization, Inc. (ISO) commercial general liability form (occurrence form) and include the following coverages and endorsements:

1. Products and completed operations coverage.
    a. Such insurance must be maintained for three years after final payment.

Copyright© 2018 National Society of Professional Engineers, American Council of Engineering Companies, and American Society of Civil Engineers. All rights reserved.

b. Contractor shall furnish Owner and each other additional insured (as identified elsewhere in the Contract) evidence of continuation of such insurance at final payment and three years thereafter.

2. Blanket contractual liability coverage, including but not limited to coverage of Contractor's contractual indemnity obligations in Paragraph 7.18.

3. Severability of interests and no insured-versus-insured or cross-liability exclusions.

4. Underground, explosion, and collapse coverage.

5. Personal injury coverage.

6. Additional insured endorsements that include both ongoing operations and products and completed operations coverage through ISO Endorsements CG 20 10 10 01 and CG 20 37 10 01 (together). If Contractor demonstrates to Owner that the specified ISO endorsements are not commercially available, then Contractor may satisfy this requirement by providing equivalent endorsements.

7. For design professional additional insureds, ISO Endorsement CG 20 32 07 04 "Additional Insured—Engineers, Architects or Surveyors Not Engaged by the Named Insured" or its equivalent.

H. *Commercial General Liability—Excluded Content:* The commercial general liability insurance policy, including its coverages, endorsements, and incorporated provisions, must not include any of the following:

1. Any modification of the standard definition of "insured contract" (except to delete the railroad protective liability exclusion if Contractor is required to indemnify a railroad or others with respect to Work within 50 feet of railroad property).

2. Any exclusion for water intrusion or water damage.

3. Any provisions resulting in the erosion of insurance limits by defense costs other than those already incorporated in ISO form CG 00 01.

4. Any exclusion of coverage relating to earth subsidence or movement.

5. Any exclusion for the insured's vicarious liability, strict liability, or statutory liability (other than worker's compensation).

6. Any limitation or exclusion based on the nature of Contractor's work.

7. Any professional liability exclusion broader in effect than the most recent edition of ISO form CG 22 79.

8. Policy cannot contain any exclusions for claims related to third party over action/labor law, excavation, collapse or underground subsidence.

Commercial General Liability Insurance –Proof of Commercial General Liability Insurance coverage via a Certificate of Insurance, exhibiting coverage is in effect during the time work for the Town is undertaken, covering all operations by or on behalf of contractor to include coverage for premises, operations and mobile equipment; independent contractors; products liability/completed operations; contractual liability [including liability for an employee injury];

Copyright© 2018 National Society of Professional Engineers, American Council of Engineering Companies, and American Society of Civil Engineers. All rights reserved.

broad form property damage & personal injury liability listing "**TOWN OF NEW WINDSOR, 555 UNION AVENUE, NEW WINDSOR, NY 12553**, **MHE ENGINEERING D.P.C, 33 AIRPORT CENTER DRIVE, SUITE 202, NEW WINDSOR, NY 12553 AND COUNTY OF ORANGE C/O OFFICE OF COMMUNITY DEVELOPMENT, 40 MATTHEWS STREET, SUITE 307A, GOSHEN, NY"** as additional insured, on a primary non-contributory basis, and Certificate Holder. The Description of Operations Box must reference "All work relative to **[INSERT SPECIFIC EVENT/CONTRACT]**. **TOWN OF NEW WINDSOR, 555 UNION AVENUE, NEW WINDSOR, NY 12553, MHE ENGINEERING D.P.C, 33 AIRPORT CENTER DRIVE, SUITE 202, NEW WINDSOR, NY 12553 AND COUNTY OF ORANGE C/O OFFICE OF COMMUNITY DEVELOPMENT, 40 MATTHEWS STREET, SUITE 307A, GOSHEN, NY 10924** is listed as additional insured."

Required limits of:

- Commercial General Liability Insurance not less than one million dollars ($1,000,000) per occurrence/three million dollars ($3,000,000) in the aggregate [per project basis];
- Personal and advertising injury coverage not less than one million dollars ($1,000,000);
- Fire damage (any one fire): not less than one hundred thousand dollars ($100,000);
- Medical expense coverage (any one person) not less than ten thousand dollars ($10,000);
- Product Liability/Completed Operations Aggregate Coverage of not less than one million dollars ($1,000,000) must be maintained for a period of at least two (2) years from final payment of the contract/project. Contractual liability (including liability for employee injury assumed under a contract) provided by ISO Occurrence Form CG 00 01 1001. Policy may NOT include the restrictive endorsement CG 24 26 (Amendment of Insured Contract Definition) or any other provision excluding coverage for contractor's sole negligence which has been assumed by contract. No residential exclusion and the certificate of insurance must affirmatively state on the Certificate of Insurance, "no exclusions to the above stated Product Liability/Completed Operations coverage are attached to this policy."
- Policy shall be endorsed for the General Aggregate to apply separately to each project.

2. **Commercial General Liability Additional Insured Endorsement** – Provide an Additional Insured Endorsement (*a document separate and apart from the Certificate of Insurance bearing the language necessary to record a change in an insurance policy*) naming "**TOWN OF NEW WINDSOR, 555 UNION AVENUE, NEW WINDSOR, NY 12553, MHE ENGINEERING D.P.C, 33 AIRPORT CENTER DRIVE, SUITE 202, NEW WINDSOR, NY 12553 AND COUNTY OF ORANGE C/O OFFICE OF COMMUNITY DEVELOPMENT, 40 MATTHEWS STREET, SUITE 307A, GOSHEN, NY 10924** as additional insured. The policy #s must be typewritten on the endorsements. [CG 2010 and form CG 2037, or equivalent].

(A) COMMERCIAL GENERAL LIABILITY POLICY must contain primary and non-contributory endorsement, including waiver of subrogation.

3. **Commercial General Liability Notice of Cancellation Endorsement** – Provide a 30-Day Notice of Cancellation Endorsement (*a document separate and apart from the Certificate of Insurance bearing the language necessary to record a change in an insurance policy*) providing "**TOWN OF NEW WINDSOR, 555 UNION AVENUE, NEW WINDSOR, NY 12553, MHE ENGINEERING**

Copyright© 2018 National Society of Professional Engineers, American Council of Engineering Companies, and American Society of Civil Engineers. All rights reserved.

D.P.C, 33 AIRPORT CENTER DRIVE, SUITE 202, NEW WINDSOR, NY 12553 AND COUNTY OF ORANGE C/O OFFICE OF COMMUNITY DEVELOPMENT, 40 MATTHEWS STREET, SUITE 307A, GOSHEN, NY 10924" with a minimum of 30-day notice of cancellation. The policy #s must be typewritten on the endorsements.

4. **COMMERCIAL BUSINESS/AUTOMOBILE LIABILITY INSURANCE** – Proof of Commercial Business/Automobile Liability Insurance for "any auto", including all owned, hired and non-owned autos, with a required limit of not less than one million dollars ($1,000,000), combined single limit, naming **TOWN OF NEW WINDSOR, 555 UNION AVENUE, NEW WINDSOR, NY 12553**, **MHE ENGINEERING D.P.C, 33 AIRPORT CENTER DRIVE, SUITE 202, NEW WINDSOR, NY 12553 AND COUNTY OF ORANGE C/O OFFICE OF COMMUNITY DEVELOPMENT, 40 MATTHEWS STREET, SUITE 307A, GOSHEN, NY 10924**, as an additional insured on a primary and non-contributory basis must be provided. If scope of work includes hauling/transporting of hazardous materials the policy **must** be endorsed with an MCS90 endorsement and ISO form 9940/9948-Pollution Liability Broadened Coverage.

5. **COMMERCIAL UMBRELLA LIABILITY INSURANCE** – Proof of Commercial Umbrella Liability with a required limit of not less than five million dollars ($5,000,000), combined single limit for bodily injury and property damage, naming **TOWN OF NEW WINDSOR, 555 UNION AVENUE, NEW WINDSOR, NY 12553, MHE ENGINEERING D.P.C, 33 AIRPORT CENTER DRIVE, SUITE 202, NEW WINDSOR, NY 12553 AND COUNTY OF ORANGE C/O OFFICE OF COMMUNITY DEVELOPMENT, 40 MATTHEWS STREET, SUITE 307A, GOSHEN, NY 10924**, as an additional insured for ongoing work and completed operations; said policy shall apply as primary insurance on a non-contributing basis for the benefit of the additional insured before any other insurance or self-insurance, including any deductible maintained by or provided to the additional insured with the exception of the contractor's General Liability and Automobile Liability policies. Umbrella coverage shall be as broad as the Primary coverage in 3 and 6 above.

Disability Benefits Insurance – Proof of Disability Benefits Insurance coverage, in effect during the time work for the Town is undertaken, must be provided on one of the following forms:

FORM #	FORM TITLE
DB-120.1	Certificate of Insurance Coverage under the New York State Disability Benefits Law
DB-155	Certificate of Disability Self-Insurance
CE-200	Certificate of Attestation of Exemption (when Contractor meets the requirements.)

All of the above referenced forms (except CE-200 and DB-155) must name: **TOWN OF NEW WINDSOR, 555 UNION AVENUE, NEW WINDSOR, NY 12553** as the Entity Requesting Proof of Coverage (Entity being listed as the Certificate Holder).

Additional information can be obtained at the Workers' Compensation website: http://www.wcb.ny.gov/content/main/Employers/Employers.jsp

Copyright© 2018 National Society of Professional Engineers, American Council of Engineering Companies, and American Society of Civil Engineers. All rights reserved.

I. *Using Umbrella or Excess Liability Insurance to Meet CGL and Other Policy Limit Requirements:* **Is not permitted under this contract.**

J. *Other Required Insurance:* **None**

K. **ENVIRONMENTAL CONTRACTOR'S LIABILITY INSURANCE** – Proof of Environmental Contractor's Liability Insurance with coverage for the services rendered to the Town, including, but not limited to removal replacement enclosure, encapsulation and/or disposal of hazardous materials, along with any related pollution events, including coverage for third-party liability claims for bodily injury, property damage and clean-up costs with a required limit of two million dollars ($2,000,000) per occurrence/five million dollars ($5,000,000) general aggregate. Said policy must also include coverage for products and completed operations. If a retroactive date is used, it must pre-date the inception of the contract. If the contract is using motor vehicles for transporting hazardous materials, the contractor shall provide pollution liability broadened coverage (ISO endorsement CA 9948 or equivalent) as well as proof of MCS 90.

6.04 *Builder's Risk and Other Property Insurance*

A. BUILDER'S RISK INSURANCE (Course of Construction)/INSTALLATION FLOATER INSURANCE/PROPERTY INSURANCE.

Evidence of Builder's Risk Insurance in the form of Course of Construction coverage. Such coverage shall name **TOWN OF NEW WINDSOR, 555 UNION AVENUE, NEW WINDSOR, NY 12553,** as its interest may appear, as loss payee.

If the project does not involve new or major reconstruction, at the option of the Owner, an **INSTALLATION FLOATER INSURANCE** may be acceptable.

For such projects, a Property Installation Floater shall be obtained that provides for the improvement, remodel, modification, alteration, conversion or adjustment to existing buildings, structures, processes, machinery and equipment. The Property Installation Floater shall provide property damage coverage for any building, structure, machinery or equipment damaged, impaired, broken or destroyed during the performance of the Work, including during transit, installation and testing at Town of New Windsor's project site.

Contractors and Sub-contractors are required to insure its own property and equipment and such policies shall contain a waiver of subrogation in favor of the Owner"

6.05 *Property Losses; Subrogation*

A. The builder's risk insurance policy purchased and maintained in accordance with Paragraph 6.04 (or an installation floater policy if authorized by the Contract Document), will contain provisions to the effect that in the event of payment of any loss or damage the insurer will have no rights of recovery against any insureds thereunder, or against Engineer or its consultants, or their officers, directors, members, partners, employees, agents, consultants, or subcontractors.

1. Owner and Contractor waive all rights against each other and the respective officers, directors, members, partners, employees, agents, consultants, and subcontractors of each and any of them, for all losses and damages caused by, arising out of, or resulting from any of the perils, risks, or causes of loss covered by such policies and any other property insurance applicable to the Work; and, in addition, waive all such rights against

Copyright© 2018 National Society of Professional Engineers, American Council of Engineering Companies, and American Society of Civil Engineers. All rights reserved.

Engineer, its consultants, all individuals or entities identified as builder's risk or installation floater insureds, and the officers, directors, members, partners, employees, agents, consultants, and subcontractors of each and any of them, under such policies for losses and damages so caused.

2. None of the above waivers extends to the rights that any party making such waiver may have to the proceeds of insurance held by Owner or Contractor as trustee or fiduciary, or otherwise payable under any policy so issued.

B. Any property insurance policy maintained by Owner covering any loss, damage, or consequential loss to Owner's existing structures, buildings, or facilities in which any part of the Work will occur, or to which any part of the Work will attach or adjoin; to adjacent structures, buildings, or facilities of Owner; or to part or all of the completed or substantially completed Work, during partial occupancy or use pursuant to Paragraph 15.04, after Substantial Completion pursuant to Paragraph 15.03, or after final payment pursuant to Paragraph 15.06, will contain provisions to the effect that in the event of payment of any loss or damage the insurer will have no rights of recovery against any insureds thereunder, or against Contractor, Subcontractors, or Engineer, or the officers, directors, members, partners, employees, agents, consultants, or subcontractors of each and any of them, and that the insured is allowed to waive the insurer's rights of subrogation in a written contract executed prior to the loss, damage, or consequential loss.

1. Owner waives all rights against Contractor, Subcontractors, and Engineer, and the officers, directors, members, partners, employees, agents, consultants and subcontractors of each and any of them, for all losses and damages caused by, arising out of, or resulting from fire or any of the perils, risks, or causes of loss covered by such policies.

C. The waivers in this Paragraph 6.05 include the waiver of rights due to business interruption, loss of use, or other consequential loss extending beyond direct physical loss or damage to Owner's property or the Work caused by, arising out of, or resulting from fire or other insured peril, risk, or cause of loss.

D. Contractor shall be responsible for assuring that each Subcontract contains provisions whereby the Subcontractor waives all rights against Owner, Contractor, all individuals or entities identified as insureds, the Engineer and its consultants, and the officers, directors, members, partners, employees, agents, consultants, and subcontractors of each and any of them, for all losses and damages caused by, arising out of, relating to, or resulting from fire or other peril, risk, or cause of loss covered by builder's risk insurance, installation floater, and any other property insurance applicable to the Work.

6.06 *Receipt and Application of Property Insurance Proceeds*

A. Any insured loss under the builder's risk and other policies of property insurance required by Paragraph 6.04 will be adjusted and settled with the named insured that purchased the policy. Such named insured shall act as fiduciary for the other insureds, and give notice to such other insureds that adjustment and settlement of a claim is in progress. Any other insured may state its position regarding a claim for insured loss in writing within 15 days after notice of such claim.

B. Proceeds for such insured losses may be made payable by the insurer either jointly to multiple insureds, or to the named insured that purchased the policy in its own right and as fiduciary for other insureds, subject to the requirements of any applicable mortgage clause. A named insured receiving insurance proceeds under the builder's risk and other policies of insurance required by Paragraph 6.04 shall maintain such proceeds in a segregated account, and

Copyright© 2018 National Society of Professional Engineers, American Council of Engineering Companies, and American Society of Civil Engineers. All rights reserved.

distribute such proceeds in accordance with such agreement as the parties in interest may reach, or as otherwise required under the dispute resolution provisions of this Contract or applicable Laws and Regulations.

C. If no other special agreement is reached, Contractor shall repair or replace the damaged Work, using allocated insurance proceeds.

6.07 *Defense, Indemnification And Hold Harmless Provisions:*

A. The following language, or language equivalent thereto, must be included and agreed to by all contractors that either bid on work to be performed for the Town or who agree to perform work for Town, which may not have been subject to bid requirements under the NYS GML:

"To the fullest extent permitted by law, the aforementioned contractor agrees it shall defend, indemnify, and hold harmless the Town of New Windsor from and against the entire amount of any and all claims, losses, damages, penalties, fines and expenses (including without limitation, reasonable attorneys' fees) arising from or relating to contractor's work or the presence of contractor or a Responsible Party on the Project site on behalf of contractor, or otherwise occurring in connection therewith. Contractor's aforesaid release, indemnity and hold harmless obligations, or portions or applications thereof, shall apply even in the event of the fault or negligence, whether active or passive, or strict liability of the parties released, indemnified or held harmless, to the fullest extent permitted by law, but in no event shall they apply to liability caused by the sole negligence or willful misconduct of the parties released, indemnified or held harmless. In claims against any person or entity indemnified under this paragraph by an employee of contractor, or anyone directly or indirectly employed by a contractor, or anyone for whose acts they may be liable, the indemnification obligation under this paragraph shall not be limited by a limitation on amount or type of damages, compensation, or benefits payable by or for contractor under workers' or workmen's compensation acts, disability benefits or other employee acts.

ARTICLE 7—CONTRACTOR'S RESPONSIBILITIES

7.01 *Contractor's Means and Methods of Construction*

A. Contractor shall be solely responsible for the means, methods, techniques, sequences, and procedures of construction.

B. If the Contract Documents note, or Contractor determines, that professional engineering or other design services are needed to carry out Contractor's responsibilities for construction means, methods, techniques, sequences, and procedures, or for Site safety, then Contractor shall cause such services to be provided by a properly licensed design professional, at Contractor's expense. Such services are not Owner-delegated professional design services under this Contract, and neither Owner nor Engineer has any responsibility with respect to (1) Contractor's determination of the need for such services, (2) the qualifications or licensing of the design professionals retained or employed by Contractor, (3) the performance of such services, or (4) any errors, omissions, or defects in such services.

7.02 *Supervision and Superintendence*

A. Contractor shall supervise, inspect, and direct the Work competently and efficiently, devoting such attention thereto and applying such skills and expertise as may be necessary to perform the Work in accordance with the Contract Documents.

Copyright© 2018 National Society of Professional Engineers, American Council of Engineering Companies, and American Society of Civil Engineers. All rights reserved.

B. At all times during the progress of the Work, Contractor shall assign a competent resident superintendent who will not be replaced without written notice to Owner and Engineer except under extraordinary circumstances.

7.03 *Labor; Working Hours*

A. Contractor shall provide competent, suitably qualified personnel to survey and lay out the Work and perform construction as required by the Contract Documents. Contractor shall maintain good discipline and order at the Site.

B. Contractor shall be fully responsible to Owner and Engineer for all acts and omissions of Contractor's employees; of Suppliers and Subcontractors, and their employees; and of any other individuals or entities performing or furnishing any of the Work, just as Contractor is responsible for Contractor's own acts and omissions.

C. In the absence of any Laws or Regulations to the contrary, Contractor may perform the Work on holidays, during any or all hours of the day, and on any or all days of the week, at Contractor's sole discretion.

D. **Contractor** shall be responsible for the cost of any overtime pay or other expense incurred by the Owner for Engineer's services (including those of the Resident Project Representative, if any), Owner's representative, and construction observation services, occasioned by the performance of Work on Saturday, Sunday, any legal holiday, or as overtime on any regular work day. If Contractor is responsible but does not pay, or if the parties are unable to agree as to the amount owed, then Owner may impose a reasonable set-off against payments due under Article 15.

7.04 *Services, Materials, and Equipment*

A. Unless otherwise specified in the Contract Documents, Contractor shall provide and assume full responsibility for all services, materials, equipment, labor, transportation, construction equipment and machinery, tools, appliances, fuel, power, light, heat, telephone, water, sanitary facilities, temporary facilities, and all other facilities and incidentals necessary for the performance, testing, start up, and completion of the Work, whether or not such items are specifically called for in the Contract Documents.

B. All materials and equipment incorporated into the Work must be new and of good quality, except as otherwise provided in the Contract Documents. All special warranties and guarantees required by the Specifications will expressly run to the benefit of Owner. If required by Engineer, Contractor shall furnish satisfactory evidence (including reports of required tests) as to the source, kind, and quality of materials and equipment.

C. All materials and equipment must be stored, applied, installed, connected, erected, protected, used, cleaned, and conditioned in accordance with instructions of the applicable Supplier, except as otherwise may be provided in the Contract Documents.

D. All materials, supplies and equipment which are to be incorporated into the WORK shall not be purchased by the CONTRACTOR or SUBCONTRACTOR subject to a chattel mortgage or under a conditional sale contract or other agreement by which an interest is retained by the seller.

Copyright© 2018 National Society of Professional Engineers, American Council of Engineering Companies, and American Society of Civil Engineers. All rights reserved.

E. Materials and equipment shall be so stored as to insure the preservation of their quality and fitness for the WORK. Stored materials and equipment to be incorporated in the WORK shall be located so as to facilitate prompt inspection.

7.05 *"Or Equals"*

A. *Contractor's Request; Governing Criteria*: Whenever an item of equipment or material is specified or described in the Contract Documents by using the names of one or more proprietary items or specific Suppliers, the Contract Price has been based upon Contractor furnishing such item as specified. The specification or description of such an item is intended to establish the type, function, appearance, and quality required. Unless the specification or description contains or is followed by words reading that no like, equivalent, or "or equal" item is permitted, Contractor may request that Engineer authorize the use of other items of equipment or material, or items from other proposed Suppliers, under the circumstances described below.

1. If Engineer in its sole discretion determines that an item of equipment or material proposed by Contractor is functionally equal to that named and sufficiently similar so that no change in related Work will be required, Engineer will deem it an "or equal" item. For the purposes of this paragraph, a proposed item of equipment or material will be considered functionally equal to an item so named if:

a. in the exercise of reasonable judgment Engineer determines that the proposed item:

1) is at least equal in materials of construction, quality, durability, appearance, strength, and design characteristics;

2) will reliably perform at least equally well the function and achieve the results imposed by the design concept of the completed Project as a functioning whole;

3) has a proven record of performance and availability of responsive service; and

4) is not objectionable to Owner.

b. Contractor certifies that, if the proposed item is approved and incorporated into the Work:

1) there will be no increase in cost to the Owner or increase in Contract Times; and

2) the item will conform substantially to the detailed requirements of the item named in the Contract Documents.

B. *Contractor's Expense*: Contractor shall provide all data in support of any proposed "or equal" item at Contractor's expense.

C. *Engineer's Evaluation and Determination*: Engineer will be allowed a reasonable time to evaluate each "or-equal" request. Engineer may require Contractor to furnish additional data about the proposed "or-equal" item. Engineer will be the sole judge of acceptability. No "or-equal" item will be ordered, furnished, installed, or utilized until Engineer's review is complete and Engineer determines that the proposed item is an "or-equal," which will be evidenced by an approved Shop Drawing or other written communication. Engineer will advise Contractor in writing of any negative determination.

D. *Effect of Engineer's Determination*: Neither approval nor denial of an "or-equal" request will result in any change in Contract Price. The Engineer's denial of an "or-equal" request will be

Copyright© 2018 National Society of Professional Engineers, American Council of Engineering Companies, and American Society of Civil Engineers. All rights reserved.

final and binding, and may not be reversed through an appeal under any provision of the Contract.

E. *Treatment as a Substitution Request*: If Engineer determines that an item of equipment or material proposed by Contractor does not qualify as an "or-equal" item, Contractor may request that Engineer consider the item a proposed substitute pursuant to Paragraph 7.06.

7.06 *Substitutes*

A. *Contractor's Request; Governing Criteria*: Unless the specification or description of an item of equipment or material required to be furnished under the Contract Documents contains or is followed by words reading that no substitution is permitted, Contractor may request that Engineer authorize the use of other items of equipment or material under the circumstances described below. To the extent possible such requests must be made before commencement of related construction at the Site.

1. Contractor shall submit sufficient information as provided below to allow Engineer to determine if the item of material or equipment proposed is functionally equivalent to that named and an acceptable substitute therefor. Engineer will not accept requests for review of proposed substitute items of equipment or material from anyone other than Contractor.

2. The requirements for review by Engineer will be as set forth in Paragraph 7.06.B, as supplemented by the Specifications, and as Engineer may decide is appropriate under the circumstances.

3. Contractor shall make written application to Engineer for review of a proposed substitute item of equipment or material that Contractor seeks to furnish or use. The application:

   a. will certify that the proposed substitute item will:

      1) perform adequately the functions and achieve the results called for by the general design;

      2) be similar in substance to the item specified; and

      3) be suited to the same use as the item specified.

   b. will state:

      1) the extent, if any, to which the use of the proposed substitute item will necessitate a change in Contract Times;

      2) whether use of the proposed substitute item in the Work will require a change in any of the Contract Documents (or in the provisions of any other direct contract with Owner for other work on the Project) to adapt the design to the proposed substitute item; and

      3) whether incorporation or use of the proposed substitute item in connection with the Work is subject to payment of any license fee or royalty.

   c. will identify:

      1) all variations of the proposed substitute item from the item specified; and

      2) available engineering, sales, maintenance, repair, and replacement services.

Copyright© 2018 National Society of Professional Engineers, American Council of Engineering Companies, and American Society of Civil Engineers. All rights reserved.

d. will contain an itemized estimate of all costs or credits that will result directly or indirectly from use of such substitute item, including but not limited to changes in Contract Price, shared savings, costs of redesign, and claims of other contractors affected by any resulting change.

e. The CONTRACTOR warrants that if substitutes are accepted, no major changes in the function or general design of the PROJECT will result. Incidental changes or addition of extra component parts required to accommodate the substitute will be made by the CONTRACTOR without a change in the CONTRACT PRICE or CONTRACT TIME. For substitutions, the OWNER may require that the CONTRACTOR reimburse the OWNER for engineering review costs associated with the review of the proposed substitution.

B. *Engineer's Evaluation and Determination*: Engineer will be allowed a reasonable time to evaluate each substitute request, and to obtain comments and direction from Owner. Engineer may require Contractor to furnish additional data about the proposed substitute item. Engineer will be the sole judge of acceptability. No substitute will be ordered, furnished, installed, or utilized until Engineer's review is complete and Engineer determines that the proposed item is an acceptable substitute. Engineer's determination will be evidenced by a Field Order or a proposed Change Order accounting for the substitution itself and all related impacts, including changes in Contract Price or Contract Times. Engineer will advise Contractor in writing of any negative determination.

C. *Special Guarantee*: Owner may require Contractor to furnish at Contractor's expense a special performance guarantee or other surety with respect to any substitute.

D. *Reimbursement of Engineer's Cost*: Engineer will record Engineer's costs in evaluating a substitute proposed or submitted by Contractor. Whether or not Engineer approves a substitute so proposed or submitted by Contractor, Contractor shall reimburse Owner for the reasonable charges of Engineer for evaluating each such proposed substitute. Contractor shall also reimburse Owner for the reasonable charges of Engineer for making changes in the Contract Documents (or in the provisions of any other direct contract with Owner) resulting from the acceptance of each proposed substitute.

E. *Contractor's Expense*: Contractor shall provide all data in support of any proposed substitute at Contractor's expense.

F. *Effect of Engineer's Determination*: If Engineer approves the substitution request, Contractor shall execute the proposed Change Order and proceed with the substitution. The Engineer's denial of a substitution request will be final and binding, and may not be reversed through an appeal under any provision of the Contract. Contractor may challenge the scope of reimbursement costs imposed under Paragraph 7.06.D, by timely submittal of a Change Proposal.

7.07 *Concerning Subcontractors and Suppliers*

A. Contractor may retain Subcontractors and Suppliers for the performance of parts of the Work. Such Subcontractors and Suppliers must be acceptable to Owner. The Contractor's retention of a Subcontractor or Supplier for the performance of parts of the Work will not relieve Contractor's obligation to Owner to perform and complete the Work in accordance with the Contract Documents.

Copyright© 2018 National Society of Professional Engineers, American Council of Engineering Companies, and American Society of Civil Engineers. All rights reserved.

B. Contractor shall retain specific Subcontractors and Suppliers for the performance of designated parts of the Work if required by the Contract to do so.

C. Subsequent to the submittal of Contractor's Bid or final negotiation of the terms of the Contract, Owner may not require Contractor to retain any Subcontractor or Supplier to furnish or perform any of the Work against which Contractor has reasonable objection.

D. Prior to entry into any binding subcontract or purchase order, Contractor shall submit to Owner the identity of the proposed Subcontractor or Supplier (unless Owner has already deemed such proposed Subcontractor or Supplier acceptable during the bidding process or otherwise). Such proposed Subcontractor or Supplier shall be deemed acceptable to Owner unless Owner raises a substantive, reasonable objection within 5 days.

E. Owner may require the replacement of any Subcontractor or Supplier. Owner also may require Contractor to retain specific replacements; provided, however, that Owner may not require a replacement to which Contractor has a reasonable objection. If Contractor has submitted the identity of certain Subcontractors or Suppliers for acceptance by Owner, and Owner has accepted it (either in writing or by failing to make written objection thereto), then Owner may subsequently revoke the acceptance of any such Subcontractor or Supplier so identified solely on the basis of substantive, reasonable objection after due investigation. Contractor shall submit an acceptable replacement for the rejected Subcontractor or Supplier.

F. If Owner requires the replacement of any Subcontractor or Supplier retained by Contractor to perform any part of the Work, then Contractor shall be entitled to an adjustment in Contract Price or Contract Times, with respect to the replacement; and Contractor shall initiate a Change Proposal for such adjustment within 30 days of Owner's requirement of replacement.

G. No acceptance by Owner of any such Subcontractor or Supplier, whether initially or as a replacement, will constitute a waiver of the right of Owner to the completion of the Work in accordance with the Contract Documents.

H. On a monthly basis, Contractor shall submit to Engineer a complete list of all Subcontractors and Suppliers having a direct contract with Contractor, and of all other Subcontractors and Suppliers known to Contractor at the time of submittal.

I. Contractor shall be solely responsible for scheduling and coordinating the work of Subcontractors and Suppliers.

J. The divisions and sections of the Specifications and the identifications of any Drawings do not control Contractor in dividing the Work among Subcontractors or Suppliers, or in delineating the Work to be performed by any specific trade.

K. All Work performed for Contractor by a Subcontractor or Supplier must be pursuant to an appropriate contractual agreement that specifically binds the Subcontractor or Supplier to the applicable terms and conditions of the Contract for the benefit of Owner and Engineer.

L. Owner may furnish to any Subcontractor or Supplier, to the extent practicable, information about amounts paid to Contractor for Work performed for Contractor by the Subcontractor or Supplier.

Copyright© 2018 National Society of Professional Engineers, American Council of Engineering Companies, and American Society of Civil Engineers. All rights reserved.

M. Contractor shall restrict all Subcontractors and Suppliers from communicating with Engineer or Owner, except through Contractor or in case of an emergency, or as otherwise expressly allowed in this Contract.

7.08 *Patent Fees and Royalties*

A. Contractor shall pay all license fees and royalties and assume all costs incident to the use in the performance of the Work or the incorporation in the Work of any invention, design, process, product, or device which is the subject of patent rights or copyrights held by others. If an invention, design, process, product, or device is specified in the Contract Documents for use in the performance of the Work and if, to the actual knowledge of Owner or Engineer, its use is subject to patent rights or copyrights calling for the payment of any license fee or royalty to others, the existence of such rights will be disclosed in the Contract Documents.

B. To the fullest extent permitted by Laws and Regulations, Owner shall indemnify and hold harmless Contractor, and its officers, directors, members, partners, employees, agents, consultants, and subcontractors, from and against all claims, costs, losses, and damages (including but not limited to all fees and charges of engineers, architects, attorneys, and other professionals, and all court or arbitration or other dispute resolution costs) arising out of or relating to any infringement of patent rights or copyrights incident to the use in the performance of the Work or resulting from the incorporation in the Work of any invention, design, process, product, or device specified in the Contract Documents, but not identified as being subject to payment of any license fee or royalty to others required by patent rights or copyrights.

C. To the fullest extent permitted by Laws and Regulations, Contractor shall indemnify and hold harmless Owner and Engineer, and the officers, directors, members, partners, employees, agents, consultants and subcontractors of each and any of them, from and against all claims, costs, losses, and damages (including but not limited to all fees and charges of engineers, architects, attorneys, and other professionals and all court or arbitration or other dispute resolution costs) arising out of or relating to any infringement of patent rights or copyrights incident to the use in the performance of the Work or resulting from the incorporation in the Work of any invention, design, process, product, or device not specified in the Contract Documents.

7.09 *Permits*

A. Unless otherwise provided in the Contract Documents, Contractor shall obtain and pay for all construction permits, licenses, and certificates of occupancy. Owner shall assist Contractor, when necessary, in obtaining such permits and licenses. Contractor shall pay all governmental charges and inspection fees necessary for the prosecution of the Work which are applicable at the time of the submission of Contractor's Bid (or when Contractor became bound under a negotiated contract). Owner shall pay all charges of utility owners for connections for providing permanent service to the Work.

7.10 *Taxes*

A. Contractor shall pay all sales, consumer, use, and other similar taxes required to be paid by Contractor in accordance with the Laws and Regulations of the place of the Project which are applicable during the performance of the Work.

B. The OWNER is exempt from payment of sales and compensating use taxes of the State of New York and of cities and counties on all materials and equipment supplied to the OWNER

Copyright© 2018 National Society of Professional Engineers, American Council of Engineering Companies, and American Society of Civil Engineers. All rights reserved.

pursuant to this CONTRACT. This exemption does not, however, apply to tools, machinery, equipment or other property purchased by, leased by or to the CONTRACTOR or a SUBCONTRACTOR or the purchase by SUBCONTRACTORS of materials to be sold hereunder which will also be a purchase or procurement for resale to the CONTRACTOR (either directly or through other subcontractors) and therefore not subject to the aforesaid sales or compensating use taxes, provided that the subcontract agreements provided for the resale of such materials prior to and separate and apart from the incorporation of such materials into the permanent construction and that such subcontract agreements are in a form similar to this contract with respect to the separation of the sale of materials from the work and labor to be provided.

7.11 *Laws and Regulations*

A. Contractor shall give all notices required by and shall comply with all Laws and Regulations applicable to the performance of the Work. Neither Owner nor Engineer shall be responsible for monitoring Contractor's compliance with any Laws or Regulations.

B. If Contractor performs any Work or takes any other action knowing or having reason to know that it is contrary to Laws or Regulations, Contractor shall bear all resulting costs and losses, and shall indemnify and hold harmless Owner and Engineer, and the officers, directors, members, partners, employees, agents, consultants, and subcontractors of each and any of them, from and against all claims, costs, losses, and damages (including but not limited to all fees and charges of engineers, architects, attorneys, and other professionals and all court or arbitration or other dispute resolution costs) arising out of or relating to such Work or other action. It is not Contractor's responsibility to make certain that the Work described in the Contract Documents is in accordance with Laws and Regulations, but this does not relieve Contractor of its obligations under Paragraph 3.03.

C. Owner or Contractor may give written notice to the other party of any changes after the submission of Contractor's Bid (or after the date when Contractor became bound under a negotiated contract) in Laws or Regulations having an effect on the cost or time of performance of the Work, including but not limited to changes in Laws or Regulations having an effect on procuring permits and on sales, use, value-added, consumption, and other similar taxes. If Owner and Contractor are unable to agree on entitlement to or on the amount or extent, if any, of any adjustment in Contract Price or Contract Times resulting from such changes, then within 30 days of such written notice Contractor may submit a Change Proposal, or Owner may initiate a Claim.

7.12 *Record Documents*

A. Contractor shall maintain in a safe place at the Site one printed record copy of all Drawings, Specifications, Addenda, Change Orders, Work Change Directives, Field Orders, written interpretations and clarifications, and approved Shop Drawings. Contractor shall keep such record documents in good order and annotate them to show changes made during construction. These record documents, together with all approved Samples, will be available to Engineer for reference. Upon completion of the Work, Contractor shall deliver these record documents to Engineer.

7.13 *Safety and Protection*

A. Contractor shall be solely responsible for initiating, maintaining, and supervising all safety precautions and programs in connection with the Work. Such responsibility does not relieve

Copyright© 2018 National Society of Professional Engineers, American Council of Engineering Companies, and American Society of Civil Engineers. All rights reserved.

Subcontractors of their responsibility for the safety of persons or property in the performance of their work, nor for compliance with applicable safety Laws and Regulations.

B. Contractor shall designate a qualified and experienced safety representative whose duties and responsibilities are the prevention of Work-related accidents and the maintenance and supervision of safety precautions and programs.

C. Contractor shall take all necessary precautions for the safety of, and shall provide the necessary protection to prevent damage, injury, or loss to:

1. all persons on the Site or who may be affected by the Work;

2. all the Work and materials and equipment to be incorporated therein, whether in storage on or off the Site; and

3. other property at the Site or adjacent thereto, including trees, shrubs, lawns, walks, pavements, roadways, structures, other work in progress, utilities, and Underground Facilities not designated for removal, relocation, or replacement in the course of construction.

D. All damage, injury, or loss to any property referred to in Paragraph 7.13.C.2 or 7.13.C.3 caused, directly or indirectly, in whole or in part, by Contractor, any Subcontractor, Supplier, or any other individual or entity directly or indirectly employed by any of them to perform any of the Work, or anyone for whose acts any of them may be liable, shall be remedied by Contractor at its expense (except damage or loss attributable to the fault of Drawings or Specifications or to the acts or omissions of Owner or Engineer or anyone employed by any of them, or anyone for whose acts any of them may be liable, and not attributable, directly or indirectly, in whole or in part, to the fault or negligence of Contractor or any Subcontractor, Supplier, or other individual or entity directly or indirectly employed by any of them).

E. Contractor shall comply with all applicable Laws and Regulations relating to the safety of persons or property, or to the protection of persons or property from damage, injury, or loss; and shall erect and maintain all necessary safeguards for such safety and protection.

F. Contractor shall notify Owner; the owners of adjacent property; the owners of Underground Facilities and other utilities (if the identity of such owners is known to Contractor); and other contractors and utility owners performing work at or adjacent to the Site, in writing, when Contractor knows that prosecution of the Work may affect them, and shall cooperate with them in the protection, removal, relocation, and replacement of their property or work in progress.

G. Contractor shall comply with the applicable requirements of Owner's safety programs, if any. Any Owner's safety programs that are applicable to the Work are identified or included in the Supplementary Conditions, if attached, or Specifications.

H. Contractor shall inform Owner and Engineer of the specific requirements of Contractor's safety program with which Owner's and Engineer's employees and representatives must comply while at the Site.

I. Contractor's duties and responsibilities for safety and protection will continue until all the Work is completed, Engineer has issued a written notice to Owner and Contractor in accordance with Paragraph 15.06.C that the Work is acceptable, and Contractor has left the Site (except as otherwise expressly provided in connection with Substantial Completion).

Copyright© 2018 National Society of Professional Engineers, American Council of Engineering Companies, and American Society of Civil Engineers. All rights reserved.

J. Contractor's duties and responsibilities for safety and protection will resume whenever Contractor or any Subcontractor or Supplier returns to the Site to fulfill warranty or correction obligations, or to conduct other tasks arising from the Contract Documents.

7.14 *Hazard Communication Programs*

A. Contractor shall be responsible for coordinating any exchange of safety data sheets (formerly known as material safety data sheets) or other hazard communication information required to be made available to or exchanged between or among employers at the Site in accordance with Laws or Regulations.

7.15 *Emergencies*

A. In emergencies affecting the safety or protection of persons or the Work or property at the Site or adjacent thereto, Contractor is obligated to act to prevent damage, injury, or loss. Contractor shall give Engineer prompt written notice if Contractor believes that any significant changes in the Work or variations from the Contract Documents have been caused by an emergency, or are required as a result of Contractor's response to an emergency. If Engineer determines that a change in the Contract Documents is required because of an emergency or Contractor's response, a Work Change Directive or Change Order will be issued.

7.16 *Submittals*

A. *Shop Drawing and Sample Requirements*

1. Before submitting a Shop Drawing or Sample, Contractor shall:

a. review and coordinate the Shop Drawing or Sample with other Shop Drawings and Samples and with the requirements of the Work and the Contract Documents;

b. determine and verify:

1) all field measurements, quantities, dimensions, specified performance and design criteria, installation requirements, materials, catalog numbers, and similar information with respect to the Submittal;

2) the suitability of all materials and equipment offered with respect to the indicated application, fabrication, shipping, handling, storage, assembly, and installation pertaining to the performance of the Work; and

3) all information relative to Contractor's responsibilities for means, methods, techniques, sequences, and procedures of construction, and safety precautions and programs incident thereto;

c. confirm that the Submittal is complete with respect to all related data included in the Submittal.

2. Each Shop Drawing or Sample must bear a stamp or specific written certification that Contractor has satisfied Contractor's obligations under the Contract Documents with respect to Contractor's review of that Submittal, and that Contractor approves the Submittal.

3. With each Shop Drawing or Sample, Contractor shall give Engineer specific written notice of any variations that the Submittal may have from the requirements of the Contract

Copyright© 2018 National Society of Professional Engineers, American Council of Engineering Companies, and American Society of Civil Engineers. All rights reserved.

Documents. This notice must be set forth in a written communication separate from the Submittal; and, in addition, in the case of a Shop Drawing by a specific notation made on the Shop Drawing itself.

4. Portions of the WORK requiring a Shop Drawing or sample submission shall not begin until the Shop Drawing or submission has been reviewed and returned by the ENGINEER.

B. *Submittal Procedures for Shop Drawings and Samples*: Contractor shall label and submit Shop Drawings and Samples to Engineer for review and approval in accordance with the accepted Schedule of Submittals.

1. *Shop Drawings*

a. Contractor shall submit the number of copies required in the Specifications.

b. Data shown on the Shop Drawings must be complete with respect to quantities, dimensions, specified performance and design criteria, materials, and similar data to show Engineer the services, materials, and equipment Contractor proposes to provide, and to enable Engineer to review the information for the limited purposes required by Paragraph 7.16.C.

2. *Samples*

a. Contractor shall submit the number of Samples required in the Specifications.

b. Contractor shall clearly identify each Sample as to material, Supplier, pertinent data such as catalog numbers, the use for which intended and other data as Engineer may require to enable Engineer to review the Submittal for the limited purposes required by Paragraph 7.16.C.

3. Where a Shop Drawing or Sample is required by the Contract Documents or the Schedule of Submittals, any related Work performed prior to Engineer's review and approval of the pertinent submittal will be at the sole expense and responsibility of Contractor.

C. *Engineer's Review of Shop Drawings and Samples*

1. Engineer will provide timely review of Shop Drawings and Samples in accordance with the accepted Schedule of Submittals. Engineer's review and approval will be only to determine if the items covered by the Submittals will, after installation or incorporation in the Work, comply with the requirements of the Contract Documents, and be compatible with the design concept of the completed Project as a functioning whole as indicated by the Contract Documents.

2. Engineer's review and approval will not extend to means, methods, techniques, sequences, or procedures of construction, or to safety precautions or programs incident thereto.

3. Engineer's review and approval of a separate item as such will not indicate approval of the assembly in which the item functions.

4. Engineer's review and approval of a Shop Drawing or Sample will not relieve Contractor from responsibility for any variation from the requirements of the Contract Documents unless Contractor has complied with the requirements of Paragraph 7.16.A.3 and Engineer has given written approval of each such variation by specific written notation thereof incorporated in or accompanying the Shop Drawing or Sample. Engineer will

Copyright© 2018 National Society of Professional Engineers, American Council of Engineering Companies, and American Society of Civil Engineers. All rights reserved.

document any such approved variation from the requirements of the Contract Documents in a Field Order or other appropriate Contract modification.

5. Engineer's review and approval of a Shop Drawing or Sample will not relieve Contractor from responsibility for complying with the requirements of Paragraphs 7.16.A and B.

6. Engineer's review and approval of a Shop Drawing or Sample, or of a variation from the requirements of the Contract Documents, will not, under any circumstances, change the Contract Times or Contract Price, unless such changes are included in a Change Order.

7. Neither Engineer's receipt, review, acceptance, or approval of a Shop Drawing or Sample will result in such item becoming a Contract Document.

8. Contractor shall perform the Work in compliance with the requirements and commitments set forth in approved Shop Drawings and Samples, subject to the provisions of Paragraph 7.16.C.4.

D. *Resubmittal Procedures for Shop Drawings and Samples*

1. Contractor shall make corrections required by Engineer and shall return the required number of corrected copies of Shop Drawings and submit, as required, new Samples for review and approval. Contractor shall direct specific attention in writing to revisions other than the corrections called for by Engineer on previous Submittals.

2. Contractor shall furnish required Shop Drawing and Sample submittals with sufficient information and accuracy to obtain required approval of an item with no more than two resubmittals. Engineer will record Engineer's time for reviewing a third or subsequent resubmittal of a Shop Drawing or Sample, and Contractor shall be responsible for Engineer's charges to Owner for such time. Owner may impose a set-off against payments due Contractor to secure reimbursement for such charges.

3. If Contractor requests a change of a previously approved Shop Drawing or Sample, Contractor shall be responsible for Engineer's charges to Owner for its review time, and Owner may impose a set-off against payments due Contractor to secure reimbursement for such charges, unless the need for such change is beyond the control of Contractor.

E. *Submittals Other than Shop Drawings, Samples, and Owner-Delegated Designs*

1. The following provisions apply to all Submittals other than Shop Drawings, Samples, and Owner-delegated designs:

   a. Contractor shall submit all such Submittals to the Engineer in accordance with the Schedule of Submittals and pursuant to the applicable terms of the Contract Documents.

   b. Engineer will provide timely review of all such Submittals in accordance with the Schedule of Submittals and return such Submittals with a notation of either Accepted or Not Accepted. Any such Submittal that is not returned within the time established in the Schedule of Submittals will be deemed accepted.

   c. Engineer's review will be only to determine if the Submittal is acceptable under the requirements of the Contract Documents as to general form and content of the Submittal.

Copyright© 2018 National Society of Professional Engineers, American Council of Engineering Companies, and American Society of Civil Engineers. All rights reserved.

d. If any such Submittal is not accepted, Contractor shall confer with Engineer regarding the reason for the non-acceptance, and resubmit an acceptable document.

2. Procedures for the submittal and acceptance of the Progress Schedule, the Schedule of Submittals, and the Schedule of Values are set forth in Paragraphs 2.03. 2.04, and 2.05.

F. Owner-delegated Designs: Submittals pursuant to Owner-delegated designs are governed by the provisions of Paragraph 7.19.

7.17 *Contractor's General Warranty and Guarantee*

A. Contractor warrants and guarantees to Owner that all Work will be in accordance with the Contract Documents and will not be defective. Engineer is entitled to rely on Contractor's warranty and guarantee.

B. Owner's rights under this warranty and guarantee are in addition to, and are not limited by, Owner's rights under the correction period provisions of Paragraph 15.08. The time in which Owner may enforce its warranty and guarantee rights under this Paragraph 7.17 is limited only by applicable Laws and Regulations restricting actions to enforce such rights; provided, however, that after the end of the correction period under Paragraph 15.08:

1. Owner shall give Contractor written notice of any defective Work within 60 days of the discovery that such Work is defective; and

2. Such notice will be deemed the start of an event giving rise to a Claim under Paragraph 12.01.B, such that any related Claim must be brought within 30 days of the notice.

C. Contractor's warranty and guarantee hereunder excludes defects or damage caused by:

1. abuse, or improper modification, maintenance, or operation, by persons other than Contractor, Subcontractors, Suppliers, or any other individual or entity for whom Contractor is responsible; or

2. normal wear and tear under normal usage.

D. Contractor's obligation to perform and complete the Work in accordance with the Contract Documents is absolute. None of the following will constitute an acceptance of Work that is not in accordance with the Contract Documents, a release of Contractor's obligation to perform the Work in accordance with the Contract Documents, or a release of Owner's warranty and guarantee rights under this Paragraph 7.17:

1. Observations by Engineer;

2. Recommendation by Engineer or payment by Owner of any progress or final payment;

3. The issuance of a certificate of Substantial Completion by Engineer or any payment related thereto by Owner;

4. Use or occupancy of the Work or any part thereof by Owner;

5. Any review and approval of a Shop Drawing or Sample submittal;

6. The issuance of a notice of acceptability by Engineer;

7. The end of the correction period established in Paragraph 15.08;

8. Any inspection, test, or approval by others; or

Copyright© 2018 National Society of Professional Engineers, American Council of Engineering Companies, and American Society of Civil Engineers. All rights reserved.

9. Any correction of defective Work by Owner.

E. If the Contract requires the Contractor to accept the assignment of a contract entered into by Owner, then the specific warranties, guarantees, and correction obligations contained in the assigned contract will govern with respect to Contractor's performance obligations to Owner for the Work described in the assigned contract.

7.18 *Indemnification*

A. To the fullest extent permitted by Laws and Regulations, and in addition to any other obligations of Contractor under the Contract or otherwise, Contractor shall indemnify and hold harmless Owner and Engineer, and the officers, directors, members, partners, employees, agents, consultants and subcontractors of each and any of them, from losses, damages, costs, and judgments (including but not limited to all fees and charges of engineers, architects, attorneys, and other professionals, and all court or arbitration or other dispute resolution costs) arising from third-party claims or actions relating to or resulting from the performance or furnishing of the Work, provided that any such claim, action, loss, cost, judgment or damage is attributable to bodily injury, sickness, disease, or death, or to damage to or destruction of tangible property (other than the Work itself), including the loss of use resulting therefrom, but only to the extent caused by any negligent act or omission of Contractor, any Subcontractor, any Supplier, or any individual or entity directly or indirectly employed by any of them to perform any of the Work, or anyone for whose acts any of them may be liable.

B. In any and all claims against Owner or Engineer, or any of their officers, directors, members, partners, employees, agents, consultants, or subcontractors, by any employee (or the survivor or personal representative of such employee) of Contractor, any Subcontractor, any Supplier, or any individual or entity directly or indirectly employed by any of them to perform any of the Work, or anyone for whose acts any of them may be liable, the indemnification obligation under Paragraph 7.18.A will not be limited in any way by any limitation on the amount or type of damages, compensation, or benefits payable by or for Contractor or any such Subcontractor, Supplier, or other individual or entity under workers' compensation acts, disability benefit acts, or other employee benefit acts.

7.19 *Delegation of Professional Design Services*

A. Owner may require Contractor to provide professional design services for a portion of the Work by express delegation in the Contract Documents. Such delegation will specify the performance and design criteria that such services must satisfy, and the Submittals that Contractor must furnish to Engineer with respect to the Owner-delegated design.

B. Contractor shall cause such Owner-delegated professional design services to be provided pursuant to the professional standard of care by a properly licensed design professional, whose signature and seal must appear on all drawings, calculations, specifications, certifications, and Submittals prepared by such design professional. Such design professional must issue all certifications of design required by Laws and Regulations.

C. If a Shop Drawing or other Submittal related to the Owner-delegated design is prepared by Contractor, a Subcontractor, or others for submittal to Engineer, then such Shop Drawing or other Submittal must bear the written approval of Contractor's design professional when submitted by Contractor to Engineer.

Copyright© 2018 National Society of Professional Engineers, American Council of Engineering Companies, and American Society of Civil Engineers. All rights reserved.

D. Owner and Engineer shall be entitled to rely upon the adequacy, accuracy, and completeness of the services, certifications, and approvals performed or provided by the design professionals retained or employed by Contractor under an Owner-delegated design, subject to the professional standard of care and the performance and design criteria stated in the Contract Documents.

E. Pursuant to this Paragraph 7.19, Engineer's review, approval, and other determinations regarding design drawings, calculations, specifications, certifications, and other Submittals furnished by Contractor pursuant to an Owner-delegated design will be only for the following limited purposes:

1. Checking for conformance with the requirements of this Paragraph 7.19;

2. Confirming that Contractor (through its design professionals) has used the performance and design criteria specified in the Contract Documents; and

3. Establishing that the design furnished by Contractor is consistent with the design concept expressed in the Contract Documents.

F. Contractor shall not be responsible for the adequacy of performance or design criteria specified by Owner or Engineer.

G. Contractor is not required to provide professional services in violation of applicable Laws and Regulations.

ARTICLE 8—OTHER WORK AT THE SITE

8.01 *Other Work*

A. In addition to and apart from the Work under the Contract Documents, the Owner may perform other work at or adjacent to the Site. Such other work may be performed by Owner's employees, or through contracts between the Owner and third parties. Owner may also arrange to have third-party utility owners perform work on their utilities and facilities at or adjacent to the Site.

B. If Owner performs other work at or adjacent to the Site with Owner's employees, or through contracts for such other work, then Owner shall give Contractor written notice thereof prior to starting any such other work. If Owner has advance information regarding the start of any third-party utility work that Owner has arranged to take place at or adjacent to the Site, Owner shall provide such information to Contractor.

C. Contractor shall afford proper and safe access to the Site to each contractor that performs such other work, each utility owner performing other work, and Owner, if Owner is performing other work with Owner's employees, and provide a reasonable opportunity for the introduction and storage of materials and equipment and the execution of such other work.

D. Contractor shall do all cutting, fitting, and patching of the Work that may be required to properly connect or otherwise make its several parts come together and properly integrate with such other work. Contractor shall not endanger any work of others by cutting, excavating, or otherwise altering such work; provided, however, that Contractor may cut or alter others' work with the written consent of Engineer and the others whose work will be affected.

Copyright© 2018 National Society of Professional Engineers, American Council of Engineering Companies, and American Society of Civil Engineers. All rights reserved.

E. If the proper execution or results of any part of Contractor's Work depends upon work performed by others, Contractor shall inspect such other work and promptly report to Engineer in writing any delays, defects, or deficiencies in such other work that render it unavailable or unsuitable for the proper execution and results of Contractor's Work. Contractor's failure to so report will constitute an acceptance of such other work as fit and proper for integration with Contractor's Work except for latent defects and deficiencies in such other work.

F. The provisions of this article are not applicable to work that is performed by third-party utilities or other third-party entities without a contract with Owner, or that is performed without having been arranged by Owner. If such work occurs, then any related delay, disruption, or interference incurred by Contractor is governed by the provisions of Paragraph 4.05.C.3.

8.02 *Coordination*

A. If Owner intends to contract with others aside from the multiple Prime Contractors of this Contract, for the performance of other work at or adjacent to the Site, to perform other work at or adjacent to the Site with Owner's employees, or to arrange to have utility owners perform work at or adjacent to the Site, the following will be provided to Contractor prior to the start of any such other work:

1. The identity of the individual or entity that will have authority and responsibility for coordination of the activities among the various contractors;

2. An itemization of the specific matters to be covered by such authority and responsibility; and

3. The extent of such authority and responsibilities.

B. Unless otherwise provided in the Supplementary Conditions, if attached, Owner shall have sole authority and responsibility for such coordination.

8.03 *Legal Relationships*

A. If, in the course of performing other work for Owner at or adjacent to the Site, the Owner's employees, any other contractor working for Owner, or any utility owner that Owner has arranged to perform work, causes damage to the Work or to the property of Contractor or its Subcontractors, or delays, disrupts, interferes with, or increases the scope or cost of the performance of the Work, through actions or inaction, then Contractor shall be entitled to an equitable adjustment in the Contract Price or the Contract Times. Contractor must submit any Change Proposal seeking an equitable adjustment in the Contract Price or the Contract Times under this paragraph within 30 days of the damaging, delaying, disrupting, or interfering event. The entitlement to, and extent of, any such equitable adjustment will take into account information (if any) regarding such other work that was provided to Contractor in the Contract Documents prior to the submittal of the Bid or the final negotiation of the terms of the Contract, and any remedies available to Contractor under Laws or Regulations concerning utility action or inaction. When applicable, any such equitable adjustment in Contract Price will be conditioned on Contractor assigning to Owner all Contractor's rights against such other contractor or utility owner with respect to the damage, delay, disruption, or interference that is the subject of the adjustment. Contractor's entitlement to an adjustment of the Contract Times or Contract Price is subject to the provisions of Paragraphs 4.05.D and 4.05.E.

Copyright© 2018 National Society of Professional Engineers, American Council of Engineering Companies, and American Society of Civil Engineers. All rights reserved.

B. Contractor shall take reasonable and customary measures to avoid damaging, delaying, disrupting, or interfering with the work of Owner, any other contractor, or any utility owner performing other work at or adjacent to the Site.

1. If Contractor fails to take such measures and as a result damages, delays, disrupts, or interferes with the work of any such other contractor or utility owner, then Owner may impose a set-off against payments due Contractor, and assign to such other contractor or utility owner the Owner's contractual rights against Contractor with respect to the breach of the obligations set forth in this Paragraph 8.03.B.

2. When Owner is performing other work at or adjacent to the Site with Owner's employees, Contractor shall be liable to Owner for damage to such other work, and for the reasonable direct delay, disruption, and interference costs incurred by Owner as a result of Contractor's failure to take reasonable and customary measures with respect to Owner's other work. In response to such damage, delay, disruption, or interference, Owner may impose a set-off against payments due Contractor.

C. If Contractor damages, delays, disrupts, or interferes with the work of any other contractor, or any utility owner performing other work at or adjacent to the Site, through Contractor's failure to take reasonable and customary measures to avoid such impacts, or if any claim arising out of Contractor's actions, inactions, or negligence in performance of the Work at or adjacent to the Site is made by any such other contractor or utility owner against Contractor, Owner, or Engineer, then Contractor shall (1) promptly attempt to settle the claim as to all parties through negotiations with such other contractor or utility owner, or otherwise resolve the claim by arbitration or other dispute resolution proceeding or at law, and (2) indemnify and hold harmless Owner and Engineer, and the officers, directors, members, partners, employees, agents, consultants and subcontractors of each and any of them from and against any such claims, and against all costs, losses, and damages (including but not limited to all fees and charges of engineers, architects, attorneys, and other professionals and all court or arbitration or other dispute resolution costs) arising out of or relating to such damage, delay, disruption, or interference.

ARTICLE 9—OWNER'S RESPONSIBILITIES

9.01 *Communications to Contractor*

A. Except as otherwise provided in these General Conditions, Owner shall issue all communications to Contractor through Engineer.

9.02 *Replacement of Engineer*

A. Owner may at its discretion appoint an engineer to replace Engineer, provided Contractor makes no reasonable objection to the replacement engineer. The replacement engineer's status under the Contract Documents will be that of the former Engineer.

9.03 *Furnish Data*

A. Owner shall promptly furnish the data required of Owner under the Contract Documents.

9.04 *Pay When Due*

A. Owner shall make payments to Contractor when they are due as provided in the Agreement.

Copyright© 2018 National Society of Professional Engineers, American Council of Engineering Companies, and American Society of Civil Engineers. All rights reserved.

9.05 *Lands and Easements; Reports, Tests, and Drawings*

A. Owner's duties with respect to providing lands and easements are set forth in Paragraph 5.01.

B. Owner's duties with respect to providing engineering surveys to establish reference points are set forth in Paragraph 4.03.

C. Article 5 refers to Owner's identifying and making available to Contractor copies of reports of explorations and tests of conditions at the Site, and drawings of physical conditions relating to existing surface or subsurface structures at the Site.

9.06 *Insurance*

A. Owner's responsibilities, if any, with respect to purchasing and maintaining liability and property insurance are set forth in Article 6.

9.07 *Change Orders*

A. Owner's responsibilities with respect to Change Orders are set forth in Article 11.

9.08 *Inspections, Tests, and Approvals*

A. Owner's responsibility with respect to certain inspections, tests, and approvals is set forth in Paragraph 14.02.B.

9.09 *Limitations on Owner's Responsibilities*

A. The Owner shall not supervise, direct, or have control or authority over, nor be responsible for, Contractor's means, methods, techniques, sequences, or procedures of construction, or the safety precautions and programs incident thereto, or for any failure of Contractor to comply with Laws and Regulations applicable to the performance of the Work. Owner will not be responsible for Contractor's failure to perform the Work in accordance with the Contract Documents.

9.10 *Undisclosed Hazardous Environmental Condition*

A. Owner's responsibility in respect to an undisclosed Hazardous Environmental Condition is set forth in Paragraph 5.06.

9.11 *Evidence of Financial Arrangements*

A. Upon request of Contractor, Owner shall furnish Contractor reasonable evidence that financial arrangements have been made to satisfy Owner's obligations under the Contract (including obligations under proposed changes in the Work).

9.12 *Safety Programs*

A. While at the Site, Owner's employees and representatives shall comply with the specific applicable requirements of Contractor's safety programs of which Owner has been informed.

B. Owner shall furnish copies of any applicable Owner safety programs to Contractor.

Copyright© 2018 National Society of Professional Engineers, American Council of Engineering Companies, and American Society of Civil Engineers. All rights reserved.

ARTICLE 10—ENGINEER'S STATUS DURING CONSTRUCTION

10.01 *Owner's Representative*

A. Engineer will be Owner's representative during the construction period. The duties and responsibilities and the limitations of authority of Engineer as Owner's representative during construction are set forth in the Contract.

10.02 *Visits to Site*

A. Engineer will make visits to the Site at intervals appropriate to the various stages of construction as Engineer deems necessary in order to observe, as an experienced and qualified design professional, the progress that has been made and the quality of the various aspects of Contractor's executed Work. Based on information obtained during such visits and observations, Engineer, for the benefit of Owner, will determine, in general, if the Work is proceeding in accordance with the Contract Documents. Engineer will not be required to make exhaustive or continuous inspections on the Site to check the quality or quantity of the Work. Engineer's efforts will be directed toward providing for Owner a greater degree of confidence that the completed Work will conform generally to the Contract Documents. On the basis of such visits and observations, Engineer will keep Owner informed of the progress of the Work and will endeavor to guard Owner against defective Work.

B. Engineer's visits and observations are subject to all the limitations on Engineer's authority and responsibility set forth in Paragraph 10.07. Particularly, but without limitation, during or as a result of Engineer's visits or observations of Contractor's Work, Engineer will not supervise, direct, control, or have authority over or be responsible for Contractor's means, methods, techniques, sequences, or procedures of construction, or the safety precautions and programs incident thereto, or for any failure of Contractor to comply with Laws and Regulations applicable to the performance of the Work.

10.03 *Engineer's Authority*

A. Engineer has the authority to reject Work in accordance with Article 14.

B. Engineer's authority as to Submittals is set forth in Paragraph 7.16.

C. Engineer's authority as to design drawings, calculations, specifications, certifications and other Submittals from Contractor in response to Owner's delegation (if any) to Contractor of professional design services, is set forth in Paragraph 7.19.

D. Engineer's authority as to changes in the Work is set forth in Article 11.

E. Engineer's authority as to Applications for Payment is set forth in Article 15.

10.04 *Determinations for Unit Price Work*

A. Engineer will determine the actual quantities and classifications of Unit Price Work performed by Contractor as set forth in Paragraph 13.03.

10.05 *Decisions on Requirements of Contract Documents and Acceptability of Work*

A. Engineer will render decisions regarding the requirements of the Contract Documents, and judge the acceptability of the Work, pursuant to the specific procedures set forth herein for initial interpretations, Change Proposals, and acceptance of the Work. In rendering such

Copyright© 2018 National Society of Professional Engineers, American Council of Engineering Companies, and American Society of Civil Engineers. All rights reserved.

decisions and judgments, Engineer will not show partiality to Owner or Contractor, and will not be liable to Owner, Contractor, or others in connection with any proceedings, interpretations, decisions, or judgments conducted or rendered in good faith.

10.06 *Limitations on Engineer's Authority and Responsibilities*

A. Neither Engineer's authority or responsibility under this Article 10 or under any other provision of the Contract, nor any decision made by Engineer in good faith either to exercise or not exercise such authority or responsibility or the undertaking, exercise, or performance of any authority or responsibility by Engineer, will create, impose, or give rise to any duty in contract, tort, or otherwise owed by Engineer to Contractor, any Subcontractor, any Supplier, any other individual or entity, or to any surety for or employee or agent of any of them.

B. Engineer will not supervise, direct, control, or have authority over or be responsible for Contractor's means, methods, techniques, sequences, or procedures of construction, or the safety precautions and programs incident thereto, or for any failure of Contractor to comply with Laws and Regulations applicable to the performance of the Work. Engineer will not be responsible for Contractor's failure to perform the Work in accordance with the Contract Documents.

C. Engineer will not be responsible for the acts or omissions of Contractor or of any Subcontractor, any Supplier, or of any other individual or entity performing any of the Work.

D. Engineer's review of the final Application for Payment and accompanying documentation, and all maintenance and operating instructions, schedules, guarantees, bonds, certificates of inspection, tests and approvals, and other documentation required to be delivered by Contractor under Paragraph 15.06.A, will only be to determine generally that their content complies with the requirements of, and in the case of certificates of inspections, tests, and approvals, that the results certified indicate compliance with the Contract Documents.

E. The limitations upon authority and responsibility set forth in this Paragraph 10.07 also apply to the Resident Project Representative, if any.

10.07 *Compliance with Safety Program*

A. While at the Site, Engineer's employees and representatives will comply with the specific applicable requirements of Owner's and Contractor's safety programs of which Engineer has been informed.

ARTICLE 11—CHANGES TO THE CONTRACT

11.01 *Amending and Supplementing the Contract*

A. The Contract may be amended or supplemented by a Change Order, a Work Change Directive, or a Field Order.

B. If an amendment or supplement to the Contract includes a change in the Contract Price or the Contract Times, such amendment or supplement must be set forth in a Change Order.

C. All changes to the Contract that involve (1) the performance or acceptability of the Work, (2) the design (as set forth in the Drawings, Specifications, or otherwise), or (3) other engineering or technical matters, must be supported by Engineer's recommendation. Owner and Contractor may amend other terms and conditions of the Contract without the recommendation of the Engineer.

Copyright© 2018 National Society of Professional Engineers, American Council of Engineering Companies, and American Society of Civil Engineers. All rights reserved.

11.02 *Change Orders*

A. Owner and Contractor shall execute appropriate Change Orders covering:

1. Changes in Contract Price or Contract Times which are agreed to by the parties, including any undisputed sum or amount of time for Work actually performed in accordance with a Work Change Directive;

2. Changes in Contract Price resulting from an Owner set-off, unless Contractor has duly contested such set-off;

3. Changes in the Work which are: (a) ordered by Owner pursuant to Paragraph 11.05, (b) required because of Owner's acceptance of defective Work under Paragraph 14.04 or Owner's correction of defective Work under Paragraph 14.07, or (c) agreed to by the parties, subject to the need for Engineer's recommendation if the change in the Work involves the design (as set forth in the Drawings, Specifications, or otherwise) or other engineering or technical matters; and

4. Changes that embody the substance of any final and binding results under: Paragraph 11.03.B, resolving the impact of a Work Change Directive; Paragraph 11.09, concerning Change Proposals; Article 12, Claims; Paragraph 13.02.D, final adjustments resulting from allowances; Paragraph 13.03.D, final adjustments relating to determination of quantities for Unit Price Work; and similar provisions.

B. If Owner or Contractor refuses to execute a Change Order that is required to be executed under the terms of Paragraph 11.02.A, it will be deemed to be of full force and effect, as if fully executed.

C. The CONTRACTOR agrees that all extra work shall only be performed pursuant to a valid written CHANGE ORDER and that no oral changes in the CONTRACTOR'S scope of work shall be valid or binding upon the OWNER; and that no oral waiver of the conditions and requirements set forth shall be deemed made by the OWNER or claimed by the CONTRACTOR.

D. No changes in the work covered by the approved Contract Documents shall be made without having prior written approval of the Owner.

11.03 *Work Change Directives*

A. A Work Change Directive will not change the Contract Price or the Contract Times but is evidence that the parties expect that the modification ordered or documented by a Work Change Directive will be incorporated in a subsequently issued Change Order, following negotiations by the parties as to the Work Change Directive's effect, if any, on the Contract Price and Contract Times; or, if negotiations are unsuccessful, by a determination under the terms of the Contract Documents governing adjustments, expressly including Paragraph 11.07 regarding change of Contract Price.

B. If Owner has issued a Work Change Directive and:

1. Contractor believes that an adjustment in Contract Times or Contract Price is necessary, then Contractor shall submit any Change Proposal seeking such an adjustment no later than 30 days after the completion of the Work set out in the Work Change Directive.

Copyright© 2018 National Society of Professional Engineers, American Council of Engineering Companies, and American Society of Civil Engineers. All rights reserved.

2. Owner believes that an adjustment in Contract Times or Contract Price is necessary, then Owner shall submit any Claim seeking such an adjustment no later than 60 days after issuance of the Work Change Directive.

11.04 *Field Orders*

A. Engineer may authorize minor changes in the Work if the changes do not involve an adjustment in the Contract Price or the Contract Times and are compatible with the design concept of the completed Project as a functioning whole as indicated by the Contract Documents. Such changes will be accomplished by a Field Order and will be binding on Owner and also on Contractor, which shall perform the Work involved promptly.

B. If Contractor or Engineer believes that a Field Order justifies an adjustment in the Contract Price or Contract Times, then before proceeding with the Work at issue, Contractor shall submit a Change Proposal as provided herein.

C. Thereafter, the Contractor shall document the basis for the change in Contract Price or Time within seven (7) days (or such additional time as may be agreed to in writing by the OWNER or Engineer). The Contractor shall not execute such changes pending the receipt of an executed Change Order or further instruction from the Owner. No claim for a change in Contract Price and/or time will be considered unless written notice shall be so immediately made and documents submitted within the aforementioned time period.

11.05 *Owner-Authorized Changes in the Work*

A. Without invalidating the Contract and without notice to any surety, Owner may, at any time or from time to time, order additions, deletions, or revisions in the Work. Changes involving the design (as set forth in the Drawings, Specifications, or otherwise) or other engineering or technical matters will be supported by Engineer's recommendation.

B. Such changes in the Work may be accomplished by a Change Order, if Owner and Contractor have agreed as to the effect, if any, of the changes on Contract Times or Contract Price; or by a Work Change Directive. Upon receipt of any such document, Contractor shall promptly proceed with the Work involved; or, in the case of a deletion in the Work, promptly cease construction activities with respect to such deleted Work. Added or revised Work must be performed under the applicable conditions of the Contract Documents.

C. Nothing in this Paragraph 11.05 obligates Contractor to undertake work that Contractor reasonably concludes cannot be performed in a manner consistent with Contractor's safety obligations under the Contract Documents or Laws and Regulations.

11.06 *Unauthorized Changes in the Work*

A. Contractor shall not be entitled to an increase in the Contract Price or an extension of the Contract Times with respect to any work performed that is not required by the Contract Documents, as amended, modified, or supplemented, except in the case of an emergency as provided in Paragraph 7.15 or in the case of uncovering Work as provided in Paragraph 14.05.C.2.

11.07 *Change of Contract Price*

A. The Contract Price may only be changed by a Change Order. Any Change Proposal for an adjustment in the Contract Price must comply with the provisions of Paragraph 11.09. Any Claim for an adjustment of Contract Price must comply with the provisions of Article 12.

Copyright© 2018 National Society of Professional Engineers, American Council of Engineering Companies, and American Society of Civil Engineers. All rights reserved.

B. An adjustment in the Contract Price will be determined as follows:

1. Where the Work involved is covered by unit prices contained in the Contract Documents, then by application of such unit prices to the quantities of the items involved (subject to the provisions of Paragraph 13.03);

2. Where the Work involved is not covered by unit prices contained in the Contract Documents, then by a mutually agreed lump sum (which may include an allowance for overhead and profit not necessarily in accordance with Paragraph 11.07.C.2); or

3. Where the Work involved is not covered by unit prices contained in the Contract Documents and the parties do not reach mutual agreement to a lump sum, then on the basis of the Cost of the Work (determined as provided in Paragraph 13.01) plus a Contractor's fee for overhead and profit (determined as provided in Paragraph 11.07.C).

4. Claims for additional compensation for extra work, due to alleged errors in ground elevations, contour lines, or bench marks, will not be recognized unless accompanied by survey data, certified by a Licensed Surveyor in the State of New York, made prior to the time the original ground was disturbed, clearly showing that errors exist which resulted, or would result, in the handling of more material, or performing more work, than would be reasonably estimated from the Drawings and maps issued.

C. *Contractor's Fee*: When applicable, the Contractor's fee for overhead and profit will be determined as follows:

1. A mutually acceptable fixed fee; or

2. If a fixed fee is not agreed upon, then a fee based on the following percentages of the various portions of the Cost of the Work:

   a. For costs incurred under Paragraphs 13.01.B.1 and 13.01.B.2, the Contractor's fee will be 15 percent;

   b. For costs incurred under Paragraph 13.01.B.3, the Contractor's fee will be 5 percent;

   c. Where one or more tiers of subcontracts are on the basis of Cost of the Work plus a fee and no fixed fee is agreed upon, the intent of Paragraphs 11.07.C.2.a and 11.07.C.2.b is that the Contractor's fee will be based on: (1) a fee of 15 percent of the costs incurred under Paragraphs 13.01.B.1 and 13.01.B.2 by the Subcontractor that actually performs the Work, at whatever tier, and (2) with respect to Contractor itself and to any Subcontractors of a tier higher than that of the Subcontractor that actually performs the Work, a fee of 5 percent of the amount (fee plus underlying costs incurred) attributable to the next lower tier Subcontractor; provided, however, that for any such subcontracted Work the maximum total fee to be paid by Owner will be no greater than 27 percent of the costs incurred by the Subcontractor that actually performs the Work;

   d. No fee will be payable on the basis of costs itemized under Paragraphs 13.01.B.4, 13.01.B.5, and 13.01.C;

   e. The amount of credit to be allowed by Contractor to Owner for any change which results in a net decrease in Cost of the Work will be the amount of the actual net

Copyright© 2018 National Society of Professional Engineers, American Council of Engineering Companies, and American Society of Civil Engineers. All rights reserved.

decrease in Cost of the Work and a deduction of an additional amount equal to 5 percent of such actual net decrease in Cost of the Work; and

f. When both additions and credits are involved in any one change or Change Proposal, the adjustment in Contractor's fee will be computed by determining the sum of the costs in each of the cost categories in Paragraph 13.01.B (specifically, payroll costs, Paragraph 13.01.B.1; incorporated materials and equipment costs, Paragraph 13.01.B.2; Subcontract costs, Paragraph 13.01.B.3; special consultants costs, Paragraph 13.01.B.4; and other costs, Paragraph 13.01.B.5) and applying to each such cost category sum the appropriate fee from Paragraphs 11.07.C.2.a through 11.07.C.2.e, inclusive.

11.08 *Change of Contract Times*

A. The Contract Times may only be changed by a Change Order. Any Change Proposal for an adjustment in the Contract Times must comply with the provisions of Paragraph 11.09. Any Claim for an adjustment in the Contract Times must comply with the provisions of Article 12.

B. Delay, disruption, and interference in the Work, and any related changes in Contract Times, are addressed in and governed by Paragraph 4.05.

11.09 *Change Proposals*

A. *Purpose and Content*: Contractor shall submit a Change Proposal to Engineer to request an adjustment in the Contract Times or Contract Price; contest an initial decision by Engineer concerning the requirements of the Contract Documents or relating to the acceptability of the Work under the Contract Documents; challenge a set-off against payment due; or seek other relief under the Contract. The Change Proposal will specify any proposed change in Contract Times or Contract Price, or other proposed relief, and explain the reason for the proposed change, with citations to any governing or applicable provisions of the Contract Documents. Each Change Proposal will address only one issue, or a set of closely related issues.

B. *Change Proposal Procedures*

1. *Submittal*: Contractor shall submit each Change Proposal to Engineer within 30 days after the start of the event giving rise thereto, or after such initial decision.

2. *Supporting Data*: The Contractor shall submit supporting data, including the proposed change in Contract Price or Contract Time (if any), to the Engineer and Owner within 15 days after the submittal of the Change Proposal.

a. Change Proposals based on or related to delay, interruption, or interference must comply with the provisions of Paragraphs 4.05.D and 4.05.E.

b. Change proposals related to a change of Contract Price must include full and detailed accounts of materials incorporated into the Work and labor and equipment used for the subject Work.

The supporting data must be accompanied by a written statement that the supporting data are accurate and complete, and that any requested time or price adjustment is the entire adjustment to which Contractor believes it is entitled as a result of said event.

3. *Engineer's Initial Review*: Engineer will advise Owner regarding the Change Proposal, and consider any comments or response from Owner regarding the Change Proposal. If in its

Copyright© 2018 National Society of Professional Engineers, American Council of Engineering Companies, and American Society of Civil Engineers. All rights reserved.

discretion Engineer concludes that additional supporting data is needed before conducting a full review and making a decision regarding the Change Proposal, then Engineer may request that Contractor submit such additional supporting data by a date specified by Engineer, prior to Engineer beginning its full review of the Change Proposal.

4. *Engineer's Full Review and Action on the Change Proposal*: Upon receipt of Contractor's supporting data (including any additional data requested by Engineer), Engineer will conduct a full review of each Change Proposal and, within 30 days after such receipt of the Contractor's supporting data, either approve the Change Proposal in whole, deny it in whole, or approve it in part and deny it in part. Such actions must be in writing, with a copy provided to Owner and Contractor. If Engineer does not take action on the Change Proposal within 30 days, then either Owner or Contractor may at any time thereafter submit a letter to the other party indicating that as a result of Engineer's inaction the Change Proposal is deemed denied, thereby commencing the time for appeal of the denial under Article 12.

5. *Binding Decision*: Engineer's decision is final and binding upon Owner and Contractor, unless Owner or Contractor appeals the decision by filing a Claim under Article 12.

C. *Resolution of Certain Change Proposals*: If the Change Proposal does not involve the design (as set forth in the Drawings, Specifications, or otherwise), the acceptability of the Work, or other engineering or technical matters, then Engineer will notify the parties in writing that the Engineer is unable to resolve the Change Proposal. For purposes of further resolution of such a Change Proposal, such notice will be deemed a denial, and Contractor may choose to seek resolution under the terms of Article 12.

D. *Post-Completion*: Contractor shall not submit any Change Proposals after Engineer issues a written recommendation of final payment pursuant to Paragraph 15.06.B.

11.10 *Notification to Surety*

A. If the provisions of any bond require notice to be given to a surety of any change affecting the general scope of the Work or the provisions of the Contract Documents (including, but not limited to, Contract Price or Contract Times), the giving of any such notice will be Contractor's responsibility. The amount of each applicable bond will be adjusted to reflect the effect of any such change.

ARTICLE 12—CLAIMS

12.01 *Claims*

A. *Claims Process*: The following disputes between Owner and Contractor are subject to the Claims process set forth in this article:

1. Appeals by Owner or Contractor of Engineer's decisions regarding Change Proposals;

2. Owner demands for adjustments in the Contract Price or Contract Times, or other relief under the Contract Documents;

3. Disputes that Engineer has been unable to address because they do not involve the design (as set forth in the Drawings, Specifications, or otherwise), the acceptability of the Work, or other engineering or technical matters; and

Copyright© 2018 National Society of Professional Engineers, American Council of Engineering Companies, and American Society of Civil Engineers. All rights reserved.

4. Subject to the waiver provisions of Paragraph 15.07, any dispute arising after Engineer has issued a written recommendation of final payment pursuant to Paragraph 15.06.B.

B. *Submittal of Claim*: The party submitting a Claim shall deliver it directly to the other party to the Contract promptly (but in no event later than 30 days) after the start of the event giving rise thereto; in the case of appeals regarding Change Proposals within 30 days of the decision under appeal. The party submitting the Claim shall also furnish a copy to the Engineer, for its information only. The responsibility to substantiate a Claim rests with the party making the Claim. In the case of a Claim by Contractor seeking an increase in the Contract Times or Contract Price, Contractor shall certify that the Claim is made in good faith, that the supporting data are accurate and complete, and that to the best of Contractor's knowledge and belief the amount of time or money requested accurately reflects the full amount to which Contractor is entitled.

C. *Review and Resolution*: The party receiving a Claim shall review it thoroughly, giving full consideration to its merits. The two parties shall seek to resolve the Claim through the exchange of information and direct negotiations. The parties may extend the time for resolving the Claim by mutual agreement. All actions taken on a Claim will be stated in writing and submitted to the other party, with a copy to Engineer.

D. *Mediation*

1. At any time after initiation of a Claim, Owner and Contractor may mutually agree to mediation of the underlying dispute. The agreement to mediate will stay the Claim submittal and response process.

2. If Owner and Contractor agree to mediation, then after 60 days from such agreement, either Owner or Contractor may unilaterally terminate the mediation process, and the Claim submittal and decision process will resume as of the date of the termination. If the mediation proceeds but is unsuccessful in resolving the dispute, the Claim submittal and decision process will resume as of the date of the conclusion of the mediation, as determined by the mediator.

3. Owner and Contractor shall each pay one-half of the mediator's fees and costs.

E. *Partial Approval*: If the party receiving a Claim approves the Claim in part and denies it in part, such action will be final and binding unless within 30 days of such action the other party invokes the procedure set forth in Article 17 for final resolution of disputes.

F. *Denial of Claim*: If efforts to resolve a Claim are not successful, the party receiving the Claim may deny it by giving written notice of denial to the other party. If the receiving party does not take action on the Claim within 90 days, then either Owner or Contractor may at any time thereafter submit a letter to the other party indicating that as a result of the inaction, the Claim is deemed denied, thereby commencing the time for appeal of the denial. A denial of the Claim will be final and binding unless within 30 days of the denial the other party invokes the procedure set forth in Article 17 for the final resolution of disputes.

G. *Final and Binding Results*: If the parties reach a mutual agreement regarding a Claim, whether through approval of the Claim, direct negotiations, mediation, or otherwise; or if a Claim is approved in part and denied in part, or denied in full, and such actions become final and binding; then the results of the agreement or action on the Claim will be incorporated in a Change Order or other written document to the extent they affect the Contract, including the Work, the Contract Times, or the Contract Price.

Copyright© 2018 National Society of Professional Engineers, American Council of Engineering Companies, and American Society of Civil Engineers. All rights reserved.

ARTICLE 13—COST OF THE WORK; ALLOWANCES; UNIT PRICE WORK

13.01 *Cost of the Work*

A. *Purposes for Determination of Cost of the Work*: The term Cost of the Work means the sum of all costs necessary for the proper performance of the Work at issue, as further defined below. The provisions of this Paragraph 13.01 are used for two distinct purposes:

1. To determine Cost of the Work when Cost of the Work is a component of the Contract Price, under cost-plus-fee, time-and-materials, or other cost-based terms; or

2. When needed to determine the value of a Change Order, Change Proposal, Claim, set-off, or other adjustment in Contract Price. When the value of any such adjustment is determined on the basis of Cost of the Work, Contractor is entitled only to those additional or incremental costs required because of the change in the Work or because of the event giving rise to the adjustment.

B. *Costs Included*: Except as otherwise may be agreed to in writing by Owner, costs included in the Cost of the Work will be in amounts no higher than those commonly incurred in the locality of the Project, will not include any of the costs itemized in Paragraph 13.01.C, and will include only the following items:

1. Payroll costs for employees in the direct employ of Contractor in the performance of the Work under schedules of job classifications agreed upon by Owner and Contractor in advance of the subject Work. Such employees include, without limitation, superintendents, foremen, safety managers, safety representatives, and other personnel employed full time on the Work. Payroll costs for employees not employed full time on the Work will be apportioned on the basis of their time spent on the Work. Payroll costs include, but are not limited to, salaries and wages plus the cost of fringe benefits, which include social security contributions, unemployment, excise, and payroll taxes, workers' compensation, health and retirement benefits, sick leave, and vacation and holiday pay applicable thereto. The expenses of performing Work outside of regular working hours, on Saturday, Sunday, or legal holidays, will be included in the above to the extent authorized by Owner.

2. Cost of all materials and equipment furnished and incorporated in the Work, including costs of transportation and storage thereof, and Suppliers' field services required in connection therewith. All cash discounts accrue to Contractor unless Owner deposits funds with Contractor with which to make payments, in which case the cash discounts will accrue to Owner. All trade discounts, rebates, and refunds and returns from sale of surplus materials and equipment will accrue to Owner, and Contractor shall make provisions so that they may be obtained.

3. Payments made by Contractor to Subcontractors for Work performed by Subcontractors. If required by Owner, Contractor shall obtain competitive bids from subcontractors acceptable to Owner and Contractor and shall deliver such bids to Owner, which will then determine, with the advice of Engineer, which bids, if any, will be acceptable. If any subcontract provides that the Subcontractor is to be paid on the basis of Cost of the Work plus a fee, the Subcontractor's Cost of the Work and fee will be determined in the same manner as Contractor's Cost of the Work and fee as provided in this Paragraph 13.01.

Copyright© 2018 National Society of Professional Engineers, American Council of Engineering Companies, and American Society of Civil Engineers. All rights reserved.

4. Costs of special consultants (including but not limited to engineers, architects, testing laboratories, surveyors, attorneys, and accountants) employed or retained for services specifically related to the Work.

5. Other costs consisting of the following:

    a. The proportion of necessary transportation, travel, and subsistence expenses of Contractor's employees incurred in discharge of duties connected with the Work.

    b. Cost, including transportation and maintenance, of all materials, supplies, equipment, machinery, appliances, office, and temporary facilities at the Site, which are consumed in the performance of the Work, and cost, less market value, of such items used but not consumed which remain the property of Contractor.

        1) In establishing included costs for materials such as scaffolding, plating, or sheeting, consideration will be given to the actual or the estimated life of the material for use on other projects; or rental rates may be established on the basis of purchase or salvage value of such items, whichever is less. Contractor will not be eligible for compensation for such items in an amount that exceeds the purchase cost of such item.

    c. *Construction Equipment Rental*

        1) Rentals of all construction equipment and machinery, and the parts thereof, in accordance with rental agreements approved by Owner as to price (including any surcharge or special rates applicable to overtime use of the construction equipment or machinery), and the costs of transportation, loading, unloading, assembly, dismantling, and removal thereof. All such costs will be in accordance with the terms of said rental agreements. The rental of any such equipment, machinery, or parts must cease when the use thereof is no longer necessary for the Work.

        2) Costs for equipment and machinery owned by Contractor or a Contractor-related entity will be paid at a rate shown for such equipment in the equipment rental rate book. An hourly rate will be computed by dividing the monthly rates by 176. These computed rates will include all operating costs.

        3) With respect to Work that is the result of a Change Order, Change Proposal, Claim, set-off, or other adjustment in Contract Price ("changed Work"), included costs will be based on the time the equipment or machinery is in use on the changed Work and the costs of transportation, loading, unloading, assembly, dismantling, and removal when directly attributable to the changed Work. The cost of any such equipment or machinery, or parts thereof, must cease to accrue when the use thereof is no longer necessary for the changed Work.

    d. Sales, consumer, use, and other similar taxes related to the Work, and for which Contractor is liable, as imposed by Laws and Regulations.

    e. Deposits lost for causes other than negligence of Contractor, any Subcontractor, or anyone directly or indirectly employed by any of them or for whose acts any of them may be liable, and royalty payments and fees for permits and licenses.

    f. Losses and damages (and related expenses) caused by damage to the Work, not compensated by insurance or otherwise, sustained by Contractor in connection with

Copyright© 2018 National Society of Professional Engineers, American Council of Engineering Companies, and American Society of Civil Engineers. All rights reserved.

the performance of the Work (except losses and damages within the deductible amounts of builder's risk or other property insurance established in accordance with Paragraph 6.04), provided such losses and damages have resulted from causes other than the negligence of Contractor, any Subcontractor, or anyone directly or indirectly employed by any of them or for whose acts any of them may be liable. Such losses include settlements made with the written consent and approval of Owner. No such losses, damages, and expenses will be included in the Cost of the Work for the purpose of determining Contractor's fee.

g. The cost of utilities, fuel, and sanitary facilities at the Site.

h. Minor expenses such as communication service at the Site, express and courier services, and similar petty cash items in connection with the Work.

i. The costs of premiums for all bonds and insurance that Contractor is required by the Contract Documents to purchase and maintain.

C. *Costs Excluded*: The term Cost of the Work does not include any of the following items:

1. Payroll costs and other compensation of Contractor's officers, executives, principals, general managers, engineers, architects, estimators, attorneys, auditors, accountants, purchasing and contracting agents, expediters, timekeepers, clerks, and other personnel employed by Contractor, whether at the Site or in Contractor's principal or branch office for general administration of the Work and not specifically included in the agreed upon schedule of job classifications referred to in Paragraph 13.01.B.1 or specifically covered by Paragraph 13.01.B.4. The payroll costs and other compensation excluded here are to be considered administrative costs covered by the Contractor's fee.

2. The cost of purchasing, renting, or furnishing small tools and hand tools.

3. Expenses of Contractor's principal and branch offices other than Contractor's office at the Site.

4. Any part of Contractor's capital expenses, including interest on Contractor's capital employed for the Work and charges against Contractor for delinquent payments.

5. Costs due to the negligence of Contractor, any Subcontractor, or anyone directly or indirectly employed by any of them or for whose acts any of them may be liable, including but not limited to, the correction of defective Work, disposal of materials or equipment wrongly supplied, and making good any damage to property.

6. Expenses incurred in preparing and advancing Claims.

7. Other overhead or general expense costs of any kind and the costs of any item not specifically and expressly included in Paragraph 13.01.B.

D. *Contractor's Fee*

1. When the Work as a whole is performed on the basis of cost-plus-a-fee, then:

a. Contractor's fee for the Work set forth in the Contract Documents as of the Effective Date of the Contract will be determined as set forth in the Agreement.

Copyright© 2018 National Society of Professional Engineers, American Council of Engineering Companies, and American Society of Civil Engineers. All rights reserved.

b. for any Work covered by a Change Order, Change Proposal, Claim, set-off, or other adjustment in Contract Price on the basis of Cost of the Work, Contractor's fee will be determined as follows:

1) When the fee for the Work as a whole is a percentage of the Cost of the Work, the fee will automatically adjust as the Cost of the Work changes.

2) When the fee for the Work as a whole is a fixed fee, the fee for any additions or deletions will be determined in accordance with Paragraph 11.07.C.2.

2. When the Work as a whole is performed on the basis of a stipulated sum, or any other basis other than cost-plus-a-fee, then Contractor's fee for any Work covered by a Change Order, Change Proposal, Claim, set-off, or other adjustment in Contract Price on the basis of Cost of the Work will be determined in accordance with Paragraph 11.07.C.2.

E. *Documentation and Audit*: Whenever the Cost of the Work for any purpose is to be determined pursuant to this Article 13, Contractor and pertinent Subcontractors will establish and maintain records of the costs in accordance with generally accepted accounting practices. Subject to prior written notice, Owner will be afforded reasonable access, during normal business hours, to all Contractor's accounts, records, books, correspondence, instructions, drawings, receipts, vouchers, memoranda, and similar data relating to the Cost of the Work and Contractor's fee. Contractor shall preserve all such documents for a period of three years after the final payment by Owner. Pertinent Subcontractors will afford such access to Owner, and preserve such documents, to the same extent required of Contractor.

13.02 *Allowances*

A. It is understood that Contractor has included in the Contract Price all allowances so named in the Contract Documents and shall cause the Work so covered to be performed for such sums and by such persons or entities as may be acceptable to Owner and Engineer.

B. *Cash Allowances*: Contractor agrees that:

1. the cash allowances include the cost to Contractor (less any applicable trade discounts) of materials and equipment required by the allowances to be delivered at the Site, and all applicable taxes; and

2. Contractor's costs for unloading and handling on the Site, labor, installation, overhead, profit, and other expenses contemplated for the cash allowances have been included in the Contract Price and not in the allowances, and no demand for additional payment for any of the foregoing will be valid.

C. *Owner's Contingency Allowance*: Contractor agrees that an Owner's contingency allowance, if any, is for the sole use of Owner to cover unanticipated costs.

D. Prior to final payment, an appropriate Change Order will be issued as recommended by Engineer to reflect actual amounts due Contractor for Work covered by allowances, and the Contract Price will be correspondingly adjusted.

13.03 *Unit Price Work*

A. Where the Contract Documents provide that all or part of the Work is to be Unit Price Work, initially the Contract Price will be deemed to include for all Unit Price Work an amount equal to the sum of the unit price for each separately identified item of Unit Price Work times the estimated quantity of each item as indicated in the Agreement.

Copyright© 2018 National Society of Professional Engineers, American Council of Engineering Companies, and American Society of Civil Engineers. All rights reserved.

B. The estimated quantities of items of Unit Price Work are not guaranteed and are solely for the purpose of comparison of Bids and determining an initial Contract Price. Payments to Contractor for Unit Price Work will be based on actual quantities.

C. Each unit price will be deemed to include an amount considered by Contractor to be adequate to cover Contractor's overhead and profit for each separately identified item.

D. Engineer will determine the actual quantities and classifications of Unit Price Work performed by Contractor. Engineer will review with Contractor the Engineer's preliminary determinations on such matters before rendering a written decision thereon (by recommendation of an Application for Payment or otherwise). Engineer's written decision thereon will be final and binding (except as modified by Engineer to reflect changed factual conditions or more accurate data) upon Owner and Contractor, and the final adjustment of Contract Price will be set forth in a Change Order, subject to the provisions of the following paragraph.

E. *Adjustments in Unit Price*

1. Contractor or Owner shall be entitled to an adjustment in the unit price with respect to an item of Unit Price Work if:

a. the quantity of the item of Unit Price Work performed by Contractor differs materially and significantly from the estimated quantity of such item indicated in the Agreement; and

b. Contractor's unit costs to perform the item of Unit Price Work have changed materially and significantly as a result of the quantity change.

2. The adjustment in unit price will account for and be coordinated with any related changes in quantities of other items of Work, and in Contractor's costs to perform such other Work, such that the resulting overall change in Contract Price is equitable to Owner and Contractor.

3. Adjusted unit prices will apply to all units of that item.

ARTICLE 14—TESTS AND INSPECTIONS; CORRECTION, REMOVAL, OR ACCEPTANCE OF DEFECTIVE WORK

14.01 *Access to Work*

A. Owner, Engineer, their consultants and other representatives and personnel of Owner, independent testing laboratories, and authorities having jurisdiction have access to the Site and the Work at reasonable times for their observation, inspection, and testing. Contractor shall provide them proper and safe conditions for such access and advise them of Contractor's safety procedures and programs so that they may comply with such procedures and programs as applicable.

14.02 *Tests, Inspections, and Approvals*

A. Contractor shall give Engineer timely notice of readiness of the Work (or specific parts thereof) for all required inspections and tests, and shall cooperate with inspection and testing personnel to facilitate required inspections and tests.

B. Owner shall retain and pay for the services of an independent inspector, testing laboratory, or other qualified individual or entity to perform all inspections and tests expressly required

Copyright© 2018 National Society of Professional Engineers, American Council of Engineering Companies, and American Society of Civil Engineers. All rights reserved.

by the Contract Documents to be furnished and paid for by Owner, except that costs incurred in connection with tests or inspections of covered Work will be governed by the provisions of Paragraph 14.05.

C. If Laws or Regulations of any public body having jurisdiction require any Work (or part thereof) specifically to be inspected, tested, or approved by an employee or other representative of such public body, Contractor shall assume full responsibility for arranging and obtaining such inspections, tests, or approvals, pay all costs in connection therewith, and furnish Engineer the required certificates of inspection or approval.

D. Contractor shall be responsible for arranging, obtaining, and paying for all inspections and tests required:

1. by the Contract Documents, unless the Contract Documents expressly allocate responsibility for a specific inspection or test to Owner;

2. to attain Owner's and Engineer's acceptance of materials or equipment to be incorporated in the Work;

3. by manufacturers of equipment furnished under the Contract Documents;

4. for testing, adjusting, and balancing of mechanical, electrical, and other equipment to be incorporated into the Work; and

5. for acceptance of materials, mix designs, or equipment submitted for approval prior to Contractor's purchase thereof for incorporation in the Work.

Such inspections and tests will be performed by independent inspectors, testing laboratories, or other qualified individuals or entities acceptable to Owner and Engineer.

E. If the Contract Documents require the Work (or part thereof) to be approved by Owner, Engineer, or another designated individual or entity, then Contractor shall assume full responsibility for arranging and obtaining such approvals.

F. If any Work (or the work of others) that is to be inspected, tested, or approved is covered by Contractor without written concurrence of Engineer, Contractor shall, if requested by Engineer, uncover such Work for observation. Such uncovering will be at Contractor's expense unless Contractor had given Engineer timely notice of Contractor's intention to cover the same and Engineer had not acted with reasonable promptness in response to such notice.

G. Observations, reviews, tests or acceptance by the Engineer or others shall not relieve the Contractor from his obligations to perform the Work in accordance with the requirements of the Contract Documents.

14.03 *Defective Work*

A. *Contractor's Obligation*: It is Contractor's obligation to assure that the Work is not defective.

B. *Engineer's Authority*: Engineer has the authority to determine whether Work is defective, and to reject defective Work.

C. *Notice of Defects*: Prompt written notice of all defective Work of which Owner or Engineer has actual knowledge will be given to Contractor.

D. *Correction, or Removal and Replacement*: Promptly after receipt of written notice of defective Work, Contractor shall correct all such defective Work, at contractors expense, whether or

Copyright© 2018 National Society of Professional Engineers, American Council of Engineering Companies, and American Society of Civil Engineers. All rights reserved.

not fabricated, installed, or completed, or, if Engineer has rejected the defective Work, remove it from the Project and replace it with Work that is not defective.

E. *Preservation of Warranties*: When correcting defective Work, Contractor shall take no action that would void or otherwise impair Owner's special warranty and guarantee, if any, on said Work.

F. *Costs and Damages*: In addition to its correction, removal, and replacement obligations with respect to defective Work, Contractor shall pay all claims, costs, losses, and damages arising out of or relating to defective Work, including but not limited to the cost of the inspection, testing, correction, removal, replacement, or reconstruction of such defective Work, fines levied against Owner by governmental authorities because the Work is defective, and the costs of repair or replacement of work of others resulting from defective Work. Prior to final payment, if Owner and Contractor are unable to agree as to the measure of such claims, costs, losses, and damages resulting from defective Work, then Owner may impose a reasonable set-off against payments due under Article 15.

14.04 *Acceptance of Defective Work*

A. If, instead of requiring correction or removal and replacement of defective Work, Owner prefers to accept it, Owner may do so (subject, if such acceptance occurs prior to final payment, to Engineer's confirmation that such acceptance is in general accord with the design intent and applicable engineering principles, and will not endanger public safety). Contractor shall pay all claims, costs, losses, and damages attributable to Owner's evaluation of and determination to accept such defective Work (such costs to be approved by Engineer as to reasonableness), and for the diminished value of the Work to the extent not otherwise paid by Contractor. If any such acceptance occurs prior to final payment, the necessary revisions in the Contract Documents with respect to the Work will be incorporated in a Change Order. If the parties are unable to agree as to the decrease in the Contract Price, reflecting the diminished value of Work so accepted, then Owner may impose a reasonable set-off against payments due under Article 15. If the acceptance of defective Work occurs after final payment, Contractor shall pay an appropriate amount to Owner.

14.05 *Uncovering Work*

A. Engineer has the authority to require additional inspection or testing of the Work, whether or not the Work is fabricated, installed, or completed.

B. If any Work is covered contrary to the written request of Engineer, then Contractor shall, if requested by Engineer, uncover such Work for Engineer's observation, and then replace the covering, all at Contractor's expense.

C. If Engineer considers it necessary or advisable that covered Work be observed by Engineer or inspected or tested by others, then Contractor, at Engineer's request, shall uncover, expose, or otherwise make available for observation, inspection, or testing as Engineer may require, that portion of the Work in question, and provide all necessary labor, material, and equipment.

1. If it is found that the uncovered Work is defective, Contractor shall be responsible for all claims, costs, losses, and damages arising out of or relating to such uncovering, exposure, observation, inspection, and testing, and of satisfactory replacement or reconstruction (including but not limited to all costs of repair or replacement of work of others); and

Copyright© 2018 National Society of Professional Engineers, American Council of Engineering Companies, and American Society of Civil Engineers. All rights reserved.

pending Contractor's full discharge of this responsibility the Owner shall be entitled to impose a reasonable set-off against payments due under Article 15.

2. If the uncovered Work is not found to be defective, Contractor shall be allowed an increase in the Contract Price or an extension of the Contract Times, directly attributable to such uncovering, exposure, observation, inspection, testing, replacement, and reconstruction. If the parties are unable to agree as to the amount or extent thereof, then Contractor may submit a Change Proposal within 30 days of the determination that the Work is not defective.

14.06 *Owner May Stop the Work*

A. If the Work is defective, or Contractor fails to supply sufficient skilled workers or suitable materials or equipment, or fails to perform the Work in such a way that the completed Work will conform to the Contract Documents, then Owner may order Contractor to stop the Work, or any portion thereof, until the cause for such order has been eliminated; however, this right of Owner to stop the Work will not give rise to any duty on the part of Owner to exercise this right for the benefit of Contractor, any Subcontractor, any Supplier, any other individual or entity, or any surety for, or employee or agent of any of them.

14.07 *Owner May Correct Defective Work*

A. If Contractor fails within a reasonable time after written notice from Engineer to correct defective Work, or to remove and replace defective Work as required by Engineer, then Owner may, after 7 days' written notice to Contractor, correct or remedy any such deficiency.

B. In exercising the rights and remedies under this Paragraph 14.07, Owner shall proceed expeditiously. In connection with such corrective or remedial action, Owner may exclude Contractor from all or part of the Site, take possession of all or part of the Work and suspend Contractor's services related thereto, and incorporate in the Work all materials and equipment stored at the Site or for which Owner has paid Contractor but which are stored elsewhere. Contractor shall allow Owner, Owner's representatives, agents and employees, Owner's other contractors, and Engineer and Engineer's consultants access to the Site to enable Owner to exercise the rights and remedies under this paragraph.

C. All claims, costs, losses, and damages incurred or sustained by Owner in exercising the rights and remedies under this Paragraph 14.07 will be charged against Contractor as set-offs against payments due under Article 15. Such claims, costs, losses and damages will include but not be limited to all costs of repair, or replacement of work of others destroyed or damaged by correction, removal, or replacement of Contractor's defective Work.

D. Contractor shall not be allowed an extension of the Contract Times because of any delay in the performance of the Work attributable to the exercise by Owner of Owner's rights and remedies under this Paragraph 14.07.

ARTICLE 15—PAYMENTS TO CONTRACTOR; SET-OFFS; COMPLETION; CORRECTION PERIOD

15.01 *Progress Payments*

A. *Basis for Progress Payments*: The Schedule of Values established as provided in Article 2 will serve as the basis for progress payments and will be incorporated into a form of Application for Payment acceptable to Engineer. Progress payments for Unit Price Work will be based on the number of units completed during the pay period, as determined under the provisions of

Copyright© 2018 National Society of Professional Engineers, American Council of Engineering Companies, and American Society of Civil Engineers. All rights reserved.

Paragraph 13.03. Progress payments for cost-based Work will be based on Cost of the Work completed by Contractor during the pay period.

B. *Applications for Payments*

1. At least 10 days before the date established in the Agreement for each progress payment (but not more often than once a month), Contractor shall submit to Engineer for review an Application for Payment filled out and signed by Contractor covering the Work completed as of the date of the Application and accompanied by such supporting documentation as is required by the Contract Documents.

2. If payment is requested on the basis of materials and equipment not incorporated in the Work but delivered and suitably stored at the Site or at another location agreed to in writing, the Application for Payment must also be accompanied by: (a) a bill of sale, invoice, copies of subcontract or purchase order payments, or other documentation establishing full payment by Contractor for the materials and equipment; (b) at Owner's request, documentation warranting that Owner has received the materials and equipment free and clear of all Liens; and (c) evidence that the materials and equipment are covered by appropriate property insurance, a warehouse bond, or other arrangements to protect Owner's interest therein, all of which must be satisfactory to Owner.

3. Beginning with the second Application for Payment, each Application must include an affidavit of Contractor stating that all previous progress payments received by Contractor have been applied to discharge Contractor's legitimate obligations associated with prior Applications for Payment.

4. The amount of retainage with respect to progress payments will be as stipulated in the Agreement.

C. *Review of Applications*

1. Engineer will, within 10 days after receipt of each Application for Payment, including each resubmittal, either indicate in writing a recommendation of payment and present the Application to Owner, or return the Application to Contractor indicating in writing Engineer's reasons for refusing to recommend payment. In the latter case, Contractor may make the necessary corrections and resubmit the Application.

2. Engineer's recommendation of any payment requested in an Application for Payment will constitute a representation by Engineer to Owner, based on Engineer's observations of the executed Work as an experienced and qualified design professional, and on Engineer's review of the Application for Payment and the accompanying data and schedules, that to the best of Engineer's knowledge, information and belief:

   a. the Work has progressed to the point indicated;

   b. the quality of the Work is generally in accordance with the Contract Documents (subject to an evaluation of the Work as a functioning whole prior to or upon Substantial Completion, the results of any subsequent tests called for in the Contract Documents, a final determination of quantities and classifications for Unit Price Work under Paragraph 13.03, and any other qualifications stated in the recommendation); and

Copyright© 2018 National Society of Professional Engineers, American Council of Engineering Companies, and American Society of Civil Engineers. All rights reserved.

c. the conditions precedent to Contractor's being entitled to such payment appear to have been fulfilled in so far as it is Engineer's responsibility to observe the Work.

3. By recommending any such payment Engineer will not thereby be deemed to have represented that:

   a. inspections made to check the quality or the quantity of the Work as it has been performed have been exhaustive, extended to every aspect of the Work in progress, or involved detailed inspections of the Work beyond the responsibilities specifically assigned to Engineer in the Contract; or

   b. there may not be other matters or issues between the parties that might entitle Contractor to be paid additionally by Owner or entitle Owner to withhold payment to Contractor.

4. Neither Engineer's review of Contractor's Work for the purposes of recommending payments nor Engineer's recommendation of any payment, including final payment, will impose responsibility on Engineer:

   a. to supervise, direct, or control the Work;

   b. for the means, methods, techniques, sequences, or procedures of construction, or the safety precautions and programs incident thereto;

   c. for Contractor's failure to comply with Laws and Regulations applicable to Contractor's performance of the Work;

   d. to make any examination to ascertain how or for what purposes Contractor has used the money paid by Owner; or

   e. to determine that title to any of the Work, materials, or equipment has passed to Owner free and clear of any Liens.

5. Engineer may refuse to recommend the whole or any part of any payment if, in Engineer's opinion, it would be incorrect to make the representations to Owner stated in Paragraph 15.01.C.2.

6. Engineer will recommend reductions in payment (set-offs) necessary in Engineer's opinion to protect Owner from loss because:

   a. the Work is defective, requiring correction or replacement;

   b. the Contract Price has been reduced by Change Orders;

   c. Owner has been required to correct defective Work in accordance with Paragraph 14.07, or has accepted defective Work pursuant to Paragraph 14.04;

   d. Owner has been required to remove or remediate a Hazardous Environmental Condition for which Contractor is responsible; or

   e. Engineer has actual knowledge of the occurrence of any of the events that would constitute a default by Contractor and therefore justify termination for cause under the Contract Documents.

D. *Payment Becomes Due*

1. The Application for Payment with Engineer's recommendations will be presented to the Owner for consideration. If the Owner finds the Application for Payment acceptable, the

Copyright© 2018 National Society of Professional Engineers, American Council of Engineering Companies, and American Society of Civil Engineers. All rights reserved.

recommended amount less any reduction under the provisions of Paragraph 15.01.E will become due thirty (30) days after the Application for Payment is presented to the Owner, and the Owner will make payment to the Contractor.

E. *Reductions in Payment by Owner*

1. In addition to any reductions in payment (set-offs) recommended by Engineer, Owner is entitled to impose a set-off against payment based on any of the following:

   a. Claims have been made against Owner based on Contractor's conduct in the performance or furnishing of the Work, or Owner has incurred costs, losses, or damages resulting from Contractor's conduct in the performance or furnishing of the Work, including but not limited to claims, costs, losses, or damages from workplace injuries, adjacent property damage, non-compliance with Laws and Regulations, and patent infringement;

   b. Contractor has failed to take reasonable and customary measures to avoid damage, delay, disruption, and interference with other work at or adjacent to the Site;

   c. Contractor has failed to provide and maintain required bonds or insurance;

   d. Owner has been required to remove or remediate a Hazardous Environmental Condition for which Contractor is responsible;

   e. Owner has incurred extra charges or engineering costs related to submittal reviews, evaluations of proposed substitutes, tests and inspections, or return visits to manufacturing or assembly facilities;

   f. The Work is defective, requiring correction or replacement;

   g. Owner has been required to correct defective Work in accordance with Paragraph 14.07, or has accepted defective Work pursuant to Paragraph 14.04;

   h. The Contract Price has been reduced by Change Orders;

   i. An event has occurred that would constitute a default by Contractor and therefore justify a termination for cause;

   j. Liquidated or other damages have accrued as a result of Contractor's failure to achieve Milestones, Substantial Completion, or final completion of the Work;

   k. Liens have been filed in connection with the Work, except where Contractor has delivered a specific bond satisfactory to Owner to secure the satisfaction and discharge of such Liens; or

   l. Other items entitle Owner to a set-off against the amount recommended.

2. If Owner imposes any set-off against payment, whether based on its own knowledge or on the written recommendations of Engineer, Owner will give Contractor immediate written notice (with a copy to Engineer) stating the reasons for such action and the specific amount of the reduction, and promptly pay Contractor any amount remaining after deduction of the amount so withheld. Owner shall promptly pay Contractor the amount so withheld, or any adjustment thereto agreed to by Owner and Contractor, if Contractor remedies the reasons for such action. The reduction imposed will be binding on Contractor unless it duly submits a Change Proposal contesting the reduction.

Copyright© 2018 National Society of Professional Engineers, American Council of Engineering Companies, and American Society of Civil Engineers. All rights reserved.

3. Upon a subsequent determination that Owner's refusal of payment was not justified, the amount wrongfully withheld will be treated as an amount due as determined by Paragraph 15.01.D.1 and subject to interest as provided in the Agreement.

15.02 *Contractor's Warranty of Title*

A. Contractor warrants and guarantees that title to all Work, materials, and equipment furnished under the Contract will pass to Owner free and clear of (1) all Liens and other title defects, and (2) all patent, licensing, copyright, or royalty obligations, no later than 7 days after the time of payment by Owner.

15.03 *Substantial Completion*

A. When Contractor considers the entire Work ready for its intended use Contractor shall notify Owner and Engineer in writing that the entire Work is substantially complete and request that Engineer issue a certificate of Substantial Completion. Contractor shall at the same time submit to Owner and Engineer an initial draft of punch list items to be completed or corrected before final payment.

B. Promptly after Contractor's notification, Owner, Contractor, and Engineer shall make an inspection of the Work to determine the status of completion. If Engineer does not consider the Work substantially complete, Engineer will notify Contractor in writing giving the reasons therefor.

C. If Engineer considers the Work substantially complete, Engineer will deliver to Owner a preliminary certificate of Substantial Completion which will fix the date of Substantial Completion. Engineer shall attach to the certificate a punch list of items to be completed or corrected before final payment. Owner shall have 7 days after receipt of the preliminary certificate during which to make written objection to Engineer as to any provisions of the certificate or attached punch list. If, after considering the objections to the provisions of the preliminary certificate, Engineer concludes that the Work is not substantially complete, Engineer will, within 14 days after submission of the preliminary certificate to Owner, notify Contractor in writing that the Work is not substantially complete, stating the reasons therefor. If Owner does not object to the provisions of the certificate, or if despite consideration of Owner's objections Engineer concludes that the Work is substantially complete, then Engineer will, within said 14 days, execute and deliver to Owner and Contractor a final certificate of Substantial Completion (with a revised punch list of items to be completed or corrected) reflecting such changes from the preliminary certificate as Engineer believes justified after consideration of any objections from Owner.

D. At the time of receipt of the preliminary certificate of Substantial Completion, Owner and Contractor will confer regarding Owner's use or occupancy of the Work following Substantial Completion, review the builder's risk insurance policy with respect to the end of the builder's risk coverage, and confirm the transition to coverage of the Work under a permanent property insurance policy held by Owner. Unless Owner and Contractor agree otherwise in writing, Owner shall bear responsibility for security, operation, protection of the Work, property insurance, maintenance, heat, and utilities upon Owner's use or occupancy of the Work.

E. After Substantial Completion the Contractor shall promptly begin work on the punch list of items to be completed or corrected prior to final payment. In appropriate cases Contractor

Copyright© 2018 National Society of Professional Engineers, American Council of Engineering Companies, and American Society of Civil Engineers. All rights reserved.

may submit monthly Applications for Payment for completed punch list items, following the progress payment procedures set forth above.

F. Owner shall have the right to exclude Contractor from the Site after the date of Substantial Completion subject to allowing Contractor reasonable access to remove its property and complete or correct items on the punch list.

15.04 *Partial Use or Occupancy*

A. Prior to Substantial Completion of all the Work, Owner may use or occupy any substantially completed part of the Work which has specifically been identified in the Contract Documents, or which Owner, Engineer, and Contractor agree constitutes a separately functioning and usable part of the Work that can be used by Owner for its intended purpose without significant interference with Contractor's performance of the remainder of the Work, subject to the following conditions:

1. At any time, Owner may request in writing that Contractor permit Owner to use or occupy any such part of the Work that Owner believes to be substantially complete. If and when Contractor agrees that such part of the Work is substantially complete, Contractor, Owner, and Engineer will follow the procedures of Paragraph 15.03.A through 15.03.E for that part of the Work.

2. At any time, Contractor may notify Owner and Engineer in writing that Contractor considers any such part of the Work substantially complete and request Engineer to issue a certificate of Substantial Completion for that part of the Work.

3. Within a reasonable time after either such request, Owner, Contractor, and Engineer shall make an inspection of that part of the Work to determine its status of completion. If Engineer does not consider that part of the Work to be substantially complete, Engineer will notify Owner and Contractor in writing giving the reasons therefor. If Engineer considers that part of the Work to be substantially complete, the provisions of Paragraph 15.03 will apply with respect to certification of Substantial Completion of that part of the Work and the division of responsibility in respect thereof and access thereto.

4. No use or occupancy or separate operation of part of the Work may occur prior to compliance with the requirements of Paragraph 6.04 regarding builder's risk or other property insurance.

15.05 *Final Inspection*

A. Upon written notice from Contractor that the entire Work or an agreed portion thereof is complete, Engineer will promptly make a final inspection with Owner and Contractor and will notify Contractor in writing of all particulars in which this inspection reveals that the Work, or agreed portion thereof, is incomplete or defective. Contractor shall immediately take such measures as are necessary to complete such Work or remedy such deficiencies.

15.06 *Final Payment*

A. *Application for Payment*

1. After Contractor has, in the opinion of Engineer, satisfactorily completed all corrections identified during the final inspection and has delivered, in accordance with the Contract Documents, all maintenance and operating instructions, schedules, guarantees, bonds, certificates or other evidence of insurance, certificates of inspection, annotated record

Copyright© 2018 National Society of Professional Engineers, American Council of Engineering Companies, and American Society of Civil Engineers. All rights reserved.

documents (as provided in Paragraph 7.12), and other documents, Contractor may make application for final payment.

2. The final Application for Payment must be accompanied (except as previously delivered) by:

   a. all documentation called for in the Contract Documents;

   b. consent of the surety, if any, to final payment;

   c. satisfactory evidence that all title issues have been resolved such that title to all Work, materials, and equipment has passed to Owner free and clear of any Liens or other title defects, or will so pass upon final payment.

   d. a list of all duly pending Change Proposals and Claims; and

   e. complete and legally effective releases or waivers (satisfactory to Owner) of all Lien rights arising out of the Work, and of Liens filed in connection with the Work.

3. In lieu of the releases or waivers of Liens specified in Paragraph 15.06.A.2 and as approved by Owner, Contractor may furnish receipts or releases in full and an affidavit of Contractor that: (a) the releases and receipts include all labor, services, material, and equipment for which a Lien could be filed; and (b) all payrolls, material and equipment bills, and other indebtedness connected with the Work for which Owner might in any way be responsible, or which might in any way result in liens or other burdens on Owner's property, have been paid or otherwise satisfied. If any Subcontractor or Supplier fails to furnish such a release or receipt in full, Contractor may furnish a bond or other collateral satisfactory to Owner to indemnify Owner against any Lien, or Owner at its option may issue joint checks payable to Contractor and specified Subcontractors and Suppliers.

B. *Engineer's Review of Final Application and Recommendation of Payment*: If, on the basis of Engineer's observation of the Work during construction and final inspection, and Engineer's review of the final Application for Payment and accompanying documentation as required by the Contract Documents, Engineer is satisfied that the Work has been completed and Contractor's other obligations under the Contract have been fulfilled, Engineer will, within 10 days after receipt of the final Application for Payment, indicate in writing Engineer's recommendation of final payment and present the final Application for Payment to Owner for payment. Such recommendation will account for any set-offs against payment that are necessary in Engineer's opinion to protect Owner from loss for the reasons stated above with respect to progress payments. Otherwise, Engineer will return the Application for Payment to Contractor, indicating in writing the reasons for refusing to recommend final payment, in which case Contractor shall make the necessary corrections and resubmit the Application for Payment.

C. *Notice of Acceptability*: In support of its recommendation of payment of the final Application for Payment, Engineer will also give written notice to Owner and Contractor that the Work is acceptable, subject to stated limitations in the notice and to the provisions of Paragraph 15.07.

D. *Completion of Work*: The Work is complete (subject to surviving obligations) when it is ready for final payment as established by the Engineer's written recommendation of final payment and issuance of notice of the acceptability of the Work.

Copyright© 2018 National Society of Professional Engineers, American Council of Engineering Companies, and American Society of Civil Engineers. All rights reserved.

E. *Final Payment Becomes Due*: Upon receipt from Engineer of the final Application for Payment and accompanying documentation, Owner shall set off against the amount recommended by Engineer for final payment any further sum to which Owner is entitled, including but not limited to set-offs for liquidated damages and set-offs allowed under the provisions of this Contract with respect to progress payments. Owner shall pay the resulting balance due to Contractor within 30 days of Owner's receipt of the final Application for Payment from Engineer.

15.07 *Waiver of Claims*

A. By making final payment, Owner waives its claim or right to liquidated damages or other damages for late completion by Contractor, except as set forth in an outstanding Claim, appeal under the provisions of Article 17, set-off, or express reservation of rights by Owner. Owner reserves all other claims or rights after final payment.

B. The acceptance of final payment by Contractor will constitute a waiver by Contractor of all claims and rights against Owner other than those pending matters that have been duly submitted as a Claim, or appealed under the provisions of Article 17.

15.08 *Correction Period*

A. If within one year after the date of Substantial Completion (or such longer period of time as may be prescribed elsewhere in the Contract Documents or the terms of any applicable special guarantee required by the Contract Documents), Owner gives Contractor written notice that any Work has been found to be defective, or that Contractor's repair of any damages to the Site or adjacent areas has been found to be defective, then after receipt of such notice of defect Contractor shall promptly, without cost to Owner and in accordance with Owner's written instructions:

1. correct the defective repairs to the Site or such adjacent areas;

2. correct such defective Work;

3. remove the defective Work from the Project and replace it with Work that is not defective, if the defective Work has been rejected by Owner, and

4. satisfactorily correct or repair or remove and replace any damage to other Work, to the work of others, or to other land or areas resulting from the corrective measures.

B. Owner shall give any such notice of defect within 60 days of the discovery that such Work or repairs is defective. If such notice is given within such 60 days but after the end of the correction period, the notice will be deemed a notice of defective Work under Paragraph 7.17.B.

C. If, after receipt of a notice of defect within 60 days and within the correction period, Contractor does not promptly comply with the terms of Owner's written instructions, or in an emergency where delay would cause serious risk of loss or damage, Owner may have the defective Work corrected or repaired or may have the rejected Work removed and replaced. Contractor shall pay all costs, losses, and damages (including but not limited to all fees and charges of engineers, architects, attorneys, and other professionals and all court or arbitration or other dispute resolution costs) arising out of or relating to such correction or repair or such removal and replacement (including but not limited to all costs of repair or replacement of work of others). Contractor's failure to pay such costs, losses, and damages within 10 days of invoice from Owner will be deemed the start of an event giving rise to a Claim under

Copyright© 2018 National Society of Professional Engineers, American Council of Engineering Companies, and American Society of Civil Engineers. All rights reserved.

Paragraph 12.01.B, such that any related Claim must be brought within 30 days of the failure to pay.

D. In special circumstances where a particular item of equipment is placed in continuous service before Substantial Completion of all the Work, the correction period for that item may start to run from an earlier date if so provided in the Specifications.

E. Where defective Work (and damage to other Work resulting therefrom) has been corrected or removed and replaced under this paragraph, the correction period hereunder with respect to such Work will be extended for an additional period of one year after such correction or removal and replacement has been satisfactorily completed.

F. Contractor's obligations under this paragraph are in addition to all other obligations and warranties. The provisions of this paragraph are not to be construed as a substitute for, or a waiver of, the provisions of any applicable statute of limitation or repose.

ARTICLE 16—SUSPENSION OF WORK AND TERMINATION

16.01 *Owner May Suspend Work*

A. At any time and without cause, Owner may suspend the Work or any portion thereof for a period of not more than 90 consecutive days by written notice to Contractor and Engineer. Such notice will fix the date on which Work will be resumed. Contractor shall resume the Work on the date so fixed. Contractor shall be entitled to an adjustment in the Contract Price or an extension of the Contract Times directly attributable to any such suspension. Any Change Proposal seeking such adjustments must be submitted no later than 30 days after the date fixed for resumption of Work.

16.02 *Owner May Terminate for Cause*

A. The occurrence of any one or more of the following events will constitute a default by Contractor and justify termination for cause:

1. Contractor's persistent failure to perform the Work in accordance with the Contract Documents (including, but not limited to, failure to supply sufficient skilled workers or suitable materials or equipment, or failure to adhere to the Progress Schedule);

2. Failure of Contractor to perform or otherwise to comply with a material term of the Contract Documents;

3. Contractor's disregard of Laws or Regulations of any public body having jurisdiction; or

4. Contractor's repeated disregard of the authority of Owner or Engineer.

B. If one or more of the events identified in Paragraph 16.02.A occurs, then after giving Contractor (and any surety) 10 days' written notice that Owner is considering a declaration that Contractor is in default and termination of the Contract, Owner may proceed to:

1. declare Contractor to be in default, and give Contractor (and any surety) written notice that the Contract is terminated; and

2. enforce the rights available to Owner under any applicable performance bond.

C. Subject to the terms and operation of any applicable performance bond, if Owner has terminated the Contract for cause, Owner may exclude Contractor from the Site, take possession of the Work, incorporate in the Work all materials and equipment stored at the

Copyright© 2018 National Society of Professional Engineers, American Council of Engineering Companies, and American Society of Civil Engineers. All rights reserved.

Site or for which Owner has paid Contractor but which are stored elsewhere, and complete the Work as Owner may deem expedient.

D. Owner may not proceed with termination of the Contract under Paragraph 16.02.B if Contractor within 7 days of receipt of notice of intent to terminate begins to correct its failure to perform and proceeds diligently to cure such failure.

E. If Owner proceeds as provided in Paragraph 16.02.B, Contractor shall not be entitled to receive any further payment until the Work is completed. If the unpaid balance of the Contract Price exceeds the cost to complete the Work, including all related claims, costs, losses, and damages (including but not limited to all fees and charges of engineers, architects, attorneys, and other professionals) sustained by Owner, such excess will be paid to Contractor. If the cost to complete the Work including such related claims, costs, losses, and damages exceeds such unpaid balance, Contractor shall pay the difference to Owner. Such claims, costs, losses, and damages incurred by Owner will be reviewed by Engineer as to their reasonableness and, when so approved by Engineer, incorporated in a Change Order. When exercising any rights or remedies under this paragraph, Owner shall not be required to obtain the lowest price for the Work performed.

F. Where Contractor's services have been so terminated by Owner, the termination will not affect any rights or remedies of Owner against Contractor then existing or which may thereafter accrue, or any rights or remedies of Owner against Contractor or any surety under any payment bond or performance bond. Any retention or payment of money due Contractor by Owner will not release Contractor from liability.

G. If and to the extent that Contractor has provided a performance bond under the provisions of Paragraph 6.01.A, the provisions of that bond will govern over any inconsistent provisions of Paragraphs 16.02.B and 16.02.D.

16.03 *Owner May Terminate for Convenience*

A. Upon 7 days' written notice to Contractor and Engineer, Owner may, without cause and without prejudice to any other right or remedy of Owner, terminate the Contract. In such case, Contractor shall be paid for (without duplication of any items):

1. completed and acceptable Work executed in accordance with the Contract Documents prior to the effective date of termination, including fair and reasonable sums for overhead and profit on such Work;

2. expenses sustained prior to the effective date of termination in performing services and furnishing labor, materials, or equipment as required by the Contract Documents in connection with uncompleted Work, plus fair and reasonable sums for overhead and profit on such expenses; and

3. other reasonable expenses directly attributable to termination, including costs incurred to prepare a termination for convenience cost proposal.

B. Contractor shall not be paid for any loss of anticipated profits or revenue, post-termination overhead costs, or other economic loss arising out of or resulting from such termination.

Copyright© 2018 National Society of Professional Engineers, American Council of Engineering Companies, and American Society of Civil Engineers. All rights reserved.

16.04 *Contractor May Stop Work or Terminate*

A. If, through no act or fault of Contractor, (1) the Work is suspended for more than 90 consecutive days by Owner or under an order of court or other public authority, or (2) Engineer fails to act on any Application for Payment within 30 days after it is submitted, or (3) Owner fails for 30 days to pay Contractor any sum finally determined to be due, then Contractor may, upon 7 days' written notice to Owner and Engineer, and provided Owner or Engineer do not remedy such suspension or failure within that time, terminate the contract and recover from Owner payment on the same terms as provided in Paragraph 16.03.

B. In lieu of terminating the Contract and without prejudice to any other right or remedy, if Engineer has failed to act on an Application for Payment within 30 days after it is submitted, or Owner has failed for 30 days to pay Contractor any sum finally determined to be due, Contractor may, 7 days after written notice to Owner and Engineer, stop the Work until payment is made of all such amounts due Contractor, including interest thereon. The provisions of this paragraph are not intended to preclude Contractor from submitting a Change Proposal for an adjustment in Contract Price or Contract Times or otherwise for expenses or damage directly attributable to Contractor's stopping the Work as permitted by this paragraph.

ARTICLE 17—FINAL RESOLUTION OF DISPUTES

17.01 *Methods and Procedures*

A. *Disputes Subject to Final Resolution*: The following disputed matters are subject to final resolution under the provisions of this article:

1. A timely appeal of an approval in part and denial in part of a Claim, or of a denial in full, pursuant to Article 12; and

2. Disputes between Owner and Contractor concerning the Work, or obligations under the Contract Documents, that arise after final payment has been made.

B. *Final Resolution of Disputes*: For any dispute subject to resolution under this article, Owner or Contractor may:

1. elect in writing to invoke the dispute resolution;

2. agree with the other party to submit the dispute to another dispute resolution process; or

3. if no dispute resolution process is provided for or mutually agreed to, give written notice to the other party of the intent to submit the dispute to a court of competent jurisdiction.

ARTICLE 18—MISCELLANEOUS

18.01 *Giving Notice*

A. Whenever any provision of the Contract requires the giving of written notice to Owner, Engineer, or Contractor, it will be deemed to have been validly given only if delivered:

1. in person, by a commercial courier service or otherwise, to the recipient's place of business;

2. by registered or certified mail, postage prepaid, to the recipient's place of business; or

Copyright© 2018 National Society of Professional Engineers, American Council of Engineering Companies, and American Society of Civil Engineers. All rights reserved.

3. by e-mail to the recipient, with the words "Formal Notice" or similar in the e-mail's subject line.

18.02 *Computation of Times*

A. When any period of time is referred to in the Contract by days, it will be computed to exclude the first and include the last day of such period. If the last day of any such period falls on a Saturday or Sunday or on a day made a legal holiday by the law of the applicable jurisdiction, such day will be omitted from the computation.

18.03 *Cumulative Remedies*

A. The duties and obligations imposed by these General Conditions and the rights and remedies available hereunder to the parties hereto are in addition to, and are not to be construed in any way as a limitation of, any rights and remedies available to any or all of them which are otherwise imposed or available by Laws or Regulations, by special warranty or guarantee, or by other provisions of the Contract. The provisions of this paragraph will be as effective as if repeated specifically in the Contract Documents in connection with each particular duty, obligation, right, and remedy to which they apply.

18.04 *Limitation of Damages*

A. With respect to any and all Change Proposals, Claims, disputes subject to final resolution, and other matters at issue, neither Owner nor Engineer, nor any of their officers, directors, members, partners, employees, agents, consultants, or subcontractors, shall be liable to Contractor for any claims, costs, losses, or damages sustained by Contractor on or in connection with any other project or anticipated project.

18.05 *No Waiver*

A. A party's non-enforcement of any provision will not constitute a waiver of that provision, nor will it affect the enforceability of that provision or of the remainder of this Contract.

18.06 *Survival of Obligations*

A. All representations, indemnifications, warranties, and guarantees made in, required by, or given in accordance with the Contract, as well as all continuing obligations indicated in the Contract, will survive final payment, completion, and acceptance of the Work or termination of the Contract or of the services of Contractor.

18.07 *Controlling Law*

A. This Contract is to be governed by the law of the state in which the Project is located.

18.08 *Assignment of Contract*

A. Unless expressly agreed to elsewhere in the Contract, no assignment by a party to this Contract of any rights under or interests in the Contract will be binding on the other party without the written consent of the party sought to be bound; and, specifically but without limitation, money that may become due and money that is due may not be assigned without such consent (except to the extent that the effect of this restriction may be limited by law), and unless specifically stated to the contrary in any written consent to an assignment, no assignment will release or discharge the assignor from any duty or responsibility under the Contract.

Copyright© 2018 National Society of Professional Engineers, American Council of Engineering Companies, and American Society of Civil Engineers. All rights reserved.

18.09 *Successors and Assigns*

A. Owner and Contractor each binds itself, its successors, assigns, and legal representatives to the other party hereto, its successors, assigns, and legal representatives in respect to all covenants, agreements, and obligations contained in the Contract Documents.

18.10 *Headings*

A. Article and paragraph headings are inserted for convenience only and do not constitute parts of these General Conditions.

Copyright© 2018 National Society of Professional Engineers, American Council of Engineering Companies, and American Society of Civil Engineers. All rights reserved.

SUPPLEMENTARY CONDITIONS, PART 1 OF THE CONSTRUCTION CONTRACT

TABLE OF CONTENTS

Page

Article 1— Definitions And Terminology 1
Article 2— Preliminary Matters 1
Article 3— Contract Documents: Intent, Requirements, Reuse 2
Article 4— Commencement And Progress Of The Work 2
Article 5— Site, Subsurface And Physical Conditions, Hazardous Environmental Conditions 2
Article 6— Bonds And Insurance 4
Article 7— Contractor's Responsibilities 5
Article 8— Other Work At The Site 7
Article 9— Owner's Responsibilities 7
Article 10—Engineer's Status During Construction 7
Article 11—Changes To The Contract 7
Article 12—Claims 7
Article 13—Cost Of Work; Allowance Unit Price Work 7
Article 14—Tests And Inspections; Correction, Removal, Or Acceptance Of Defective Work 8
Article 15—Payments To Contractor, Set Offs; Completions; Correction Period 8
Article 16—Suspension Of Work And Termination 8
Article 17—Final Resolutions Of Disputes 8
Article 18—Miscellaneous 8

SUPPLEMENTARY CONDITIONS, PART 2 OF THE CONSTRUCTION CONTRACT

TABLE OF CONTENTS

Page

Article 19— NEW YORK STATE LABOR LAW 9

Copyright© 2018 National Society of Professional Engineers, American Council of Engineering Companies, and American Society of Civil Engineers. All rights reserved.

SUPPLEMENTARY CONDITIONS, PART 1 OF THE CONSTRUCTION CONTRACT

These Supplementary Conditions amend or supplement EJCDC® C-700, Standard General Conditions of the Construction Contract (2018). The General Conditions remain in full force and effect except as amended.

The terms used in these Supplementary Conditions have the meanings stated in the General Conditions. Additional terms used in these Supplementary Conditions have the meanings stated below, which are applicable to both the singular and plural thereof.

The address system used in these Supplementary Conditions is the same as the address system used in the General Conditions, with the prefix "SC" added—for example, “Paragraph SC-4.05.”

Article 1 - **DEFINITIONS AND TERMINOLOGY**

No suggested Supplementary Conditions in this Article.

Article 2 - **PRELIMINARY MATTERS**

SC-2.01 Add the following new paragraphs immediately following Paragraph 2.01C:

2.01 D. LEGAL ADDRESS OF CONTRACTOR. The address given in the Proposal upon which this contract is based is hereby designated as the legal address where all notices, letters and other communications to the Contractor shall be mailed or delivered prior to the beginning of the WORK. Transmittal in post paid wrapper, directed to the above-named place, in any post office box regularly maintained by the post office, of any notice, letter or other communication to the Contractor, shall be deemed sufficient service thereof upon the Contractor, and the date of said service shall be the date of such delivery or mailing. Such address may be changed at any time by an instrument in writing executed and acknowledged by the Contractor and delivered to the Owner by certified mail (return-receipt). Nothing herein contained shall be deemed to preclude or render inoperative the service of any notice, letter or other communication upon the Contractor personally.

2.01 E. CONTRACTOR'S TELEPHONE NUMBER. The telephone number given in the Proposal and Agreement is hereby designated as the legal telephone number whereby the Contractor or his representatives may be contacted. The Contractor shall maintain such telephone in operation during regular working hours such that, as necessary, the Contractor or his representatives may be contacted. In addition, the Contractor shall provide 24-hour emergency phone numbers, with such numbers being available to contact the Contractor at any hour in the case of an emergency situation. The Contractor shall advise the Owner and the Engineer of such emergency numbers by letter at the time of execution of the Agreement.

Copyright© 2018 National Society of Professional Engineers, American Council of Engineering Companies, and American Society of Civil Engineers. All rights reserved.

SC-2.06 Add the following statement to the end of Paragraph 2.06A

General Contractor shall provide Project Management software (Procore, Newforma, or equal) and provide proper credentials for other contractors, Engineer, Owner, and others requested by Engineer or Owner. All project related correspondence, submittals, RFI, Payment Applications, Change Orders, Schedule, Plans, Specifications, etc shall be maintained by the General Contractor through the software. Software licensing for all parties is the responsibility of the General Contractor. This supersedes any project management software requirements throughout this contract.

Article 3 - **CONTRACT DOCUMENTS: INTENT, REQUIREMENTS, REUSE**

No suggested Supplementary Conditions in this Article.

Article 4 - **COMMENCEMENT AND PROGRESS OF THE WORK**

No suggested Supplementary Conditions in this Article.

Article 5 - **SITE, SUBSURFACE AND PHYSICAL CONDITIONS, HAZARDOUS ENVIRONMENTAL CONDITIONS**

SC-5.02 Add the following to the beginning of 5.02 A.1:

The site is an active and functioning waste water treatment plant that will remain in operation at all times. Plant workers will be required to access and maintain all plant operations. Additionally, a Phase 1 Construction Contract will be ongoing which includes construction of a new Control Building, and selective demolition / improvements to the existing control building (New Dewatering Building). It will be the Contractors responsibility to familiarize themselves with these operations and staging areas.

SC-5.02 Add the following new paragraph immediately following Paragraph 5.02 D:

5.02 E. <u>TRAVEL NOT TO BE OBSTRUCTED.</u> Contractor shall not allow travel upon any street, park, roadway or alley to be hindered or inconvenienced needlessly, nor shall the same be wholly obstructed without the written permission of the OWNER, in which case the Contractor shall cause plain and properly worded signs announcing such fact to be placed, with proper barricades, at nearest cross street, upon each side of such obstructed portion, where travel can pass around the same in the shortest and the easiest way. The driveways to and from all fire department buildings and those required by all manufacturing plants, industrial establishments and other business concerns for the proper continuance of their operations shall be kept open and shall be maintained in passable condition at all times. The Contractor shall give reasonable notice to the Owners

Copyright© 2018 National Society of Professional Engineers, American Council of Engineering Companies, and American Society of Civil Engineers. All rights reserved.

of all private driveways before interfering with them, and no private drive shall be completely obstructed for a period in excess of twenty-four (24) hours.

SC-5.03 Add the following new paragraph immediately following Paragraph 5.03 E:

5.03 F. DEWATERING. It is anticipated that there will be a high incidence of ground water intrusion at structure and trench locations. The Contractor shall provide and maintain, at his own expense, all the necessary equipment, materials and labor to properly dewater all excavations on the project; the cost of all dewatering shall be deemed included in the prices bid in the Proposal.

SC-5.05 Add the following new paragraphs immediately following Paragraph 5.05 F:

5.05 G. LOCATION OF EXISTING UTILITIES. The location of known existing utilities as shown on the plans, such as waterlines, storm drains, sewers and utility lines, have been located in an approximate way only, in accordance with the best available information and from field measurements and existing available drawings. The OWNER and/or Engineer do not guarantee the completeness or the correctness of the data. However, the Contractor shall verify these locations, and in no way shall the Contractor hold the OWNER and/or Engineer responsible for utilities which may not be located as shown on or which may have been omitted from the drawings. Prior to the start of work, the Contractor shall verify these locations, and he shall take all necessary precautions to protect the utilities and services and mains and any damage to them shall be repaired immediately at the Contractor's expense. Where new construction crosses existing utilities, Contractor shall verify and/or determine location and elevation of same, prior to the beginning of construction. It should be noted that house connections for water, sewer and gas lines have not been shown on the plans, therefore, the Contractor should take every precaution to contact the applicable utility owners to verify and/or to determine locations of same.

5.05 H. NOTIFICATION OF BROKEN PIPE. In the case of a gas, water, sewer, drain, conduit or other pipe becoming broken or damaged in the prosecution of the work, the Contractor shall give immediate verbal and written notice to the proper authorities and utility owners' representatives and shall be responsible for any damage to persons or property caused by such breaks. Failure to give prompt notice to the authorities and utility owners' representatives shall make the Contractor responsible for any needless loss of water or gas.

5.05 I. UTILITY POLES AND POSTS WITHIN OR ADJACENT TO THE LINE OF TRENCH. Poles or posts of any public service corporation placed within the lines of the WORK, in such manner as to impede the progress of construction or which will lose their support because of being adjacent to the excavation, shall be removed, replaced or satisfactorily supported in accordance with mutually satisfactory arrangements between the Contractor and the said public service corporation or utility involved. The costs, if any,

Copyright© 2018 National Society of Professional Engineers, American Council of Engineering Companies, and American Society of Civil Engineers. All rights reserved.

for such arrangements shall be at the Contractor's expense as incorporated into the various contract items with no liability or additional cost to the OWNER.

5.05 J. SERVICE TO BUILDINGS. Service to all facilities, buildings, improvements, and structures must be maintained at all times, and the Contractor shall furnish and install and necessary temporary structures, appurtenances and connections required to maintain the service.

5.05 K. MAINTAINING FLOW. The Contractor shall maintain, both temporarily and permanently as required, the flow through and from existing pipes, sewers, waterlines, services, drains and water ways as required during construction. All costs of maintaining this flow shall be provided by the Contractor at his own expense, unless otherwise specified, shall be deemed included in the various contract items.

5.05 L. PROJECT SUBSURFACE SOILS DATA. Wherever borings or other subsurface information, as obtained by the OWNER, is available for a Bidder's inspection, it is understood that the information has been obtained with reasonable care and recorded in good faith with reasonable interpretations placed on the results in character of materials and conditions to be expected. The Bidder must interpret this information according to his own judgment. Information is made available to the Bidder only in order that the Bidder may have access to the identical information to the OWNER. The OWNER and/or Engineer shall assume no responsibility or liability pertaining to the Bidder's utilization or interpretation of said information.

Article 6 - **BONDS AND INSURANCE**

SC-6.01 Add the following new paragraph immediately following Paragraph 6.01 H:

6.01 I. **DISCHARGE OF CLAIM OF LIENS**. Promptly upon request of the OWNER, the Contractor or his surety on the Contractor's Labor and Material Payment Bond, or both shall, by bonding or otherwise, secure the discharge of any claim of lien or liens, which may be filed against the public improvement to be made by the contract WORK.

SC-6.02 Revise the paragraph 6.02A. to read as follows:

6.02 A. Owner and Contractor shall obtain and maintain insurance as required in this article and in the Supplementary Conditions. The OWNER, MHE Engineering, D.P.C. and their authorized subconsultants and agents shall be named as additional insured on all insurance policies.

Copyright© 2018 National Society of Professional Engineers, American Council of Engineering Companies, and American Society of Civil Engineers. All rights reserved.

Article 7 - **CONTRACTOR'S RESPONSIBILITIES**

SC-7.13 Add the following new paragraphs immediately following Paragraph 7.13 J:

7.13 K. ACCIDENT PREVENTION, SAFETY AND HEALTH REGULATIONS. The Contractor shall comply with Department of Labor Safety and Health Regulations for construction promulgated under Occupational Safety and Health Act of 1970 (PL 91-596) and under Section 107 of Contract Work Hours and Safety Standards Act (PL 91-54). Section 4(b) (4) of the Occupational Safety and Health Act of 1970 further states as follows:

"Nothing in this Act shall be construed to supersede or in any manner affect any workman's compensation law or to enlarge or diminish or affect any manner the common law or statutory rights, duties, or liabilities of employers and employees under any law with respect to injuries, diseases, or death of employees arising out of, or in the course of, employment."

The Contractor shall indemnify and save harmless the Owner and Engineer from any claims for damages resulting from personal injury and/ or death suffered or alleged to have been suffered by any person as a result of any work conducted under this contract.

7.13 L. BARRICADES, WARNING SIGNS AND LIGHTS. Barricades, danger signs and warning lights shall be provided in accordance with local jurisdictional authorities, and in accordance with the supplemental suggestions, if any, of the Engineer.

The Engineer, however, will not be responsible for specifying the number, location, type, etc. of any barricades, warnings and lights which shall fully and solely be the Contractor's responsibility.

a. The Contractor shall provide, erect and maintain as necessary, strong and suitable barricades, warning lights and danger signs along all roads accessible to the public, as required to insure safety to the public. All barricades and obstructions along public roads shall be illuminated at night and all lights for this purpose shall be kept burning from sunset to sunrise.

b. In addition, the Contractor shall provide and maintain such other warning signs and barricades in other areas as may be required for the safety of those employed in the WORK or visiting, or travelling through or adjacent to, the site.

c. Contractor shall provide and pay for necessary watchmen, as required to protect Work and materials, and flagmen required to permit the safe operation of pedestrian and vehicular traffic at all times.

d. Contractor shall not restrict access to any private road or driveway by open trenches or storage of materials or excavated material. The Contractor shall provide and maintain suitable temporary crossings over open ditches at all private roads and driveways.

SC-7.15 Add the following new paragraph immediately following Paragraph 7.15A:

Copyright© 2018 National Society of Professional Engineers, American Council of Engineering Companies, and American Society of Civil Engineers. All rights reserved.

7.15 B. **POWER OF OWNER TO ACT IN AN EMERGENCY**. In case of an emergency, which threatens loss or injury of property, and/or safety of life, the OWNER will be allowed to act, without consent of the Contractor, as he sees fit. The OWNER shall notify the Contractor thereof immediately thereafter.

Any cost to the OWNER shall be paid by the Contractor, if such acts by the OWNER should have been performed by the Contractor, if no emergency had existed which required the OWNER to act. Provisions of this section supersede those which may be conflicting in the Section entitled "Owner's Right to Complete Work".

SC-7.16 Add the following new paragraph immediately following Paragraph 7.16F:

7.16 G. OPERATION AND MAINTENANCE MANUALS. On all projects which include the furnishing and/installation of operating equipment or systems the Contractor shall furnish prior to acceptance testing of equipment and/or systems Operation and Maintenance (O&M) Manuals as follows:

a. After all start up and testing work has been completed, and the equipment is operating satisfactorily, the manufacturer of the equipment shall prepare and submit two (2) bound complete, original operation and maintenance (O & M) manuals. Manuals must be furnished at least two (2) weeks prior to the scheduling of instruction of Owner's personnel. Refer to Specification 017823 "Operation and Maintenance Data" for additional details.

b. Manuals shall reflect all operation; start up, maintenance and inspection functions, applicable to the specific equipment furnished.

c. Manuals shall include information regarding any accessories and appurtenances furnished specific to the project, as well as any modifications or adjustments made during erection and start-up.

d. Manuals shall include complete parts lists, names and telephone numbers for the manufacturer and local representatives for all equipment, and any other pertinent data regarding replacement parts.

e. Manuals shall be furnished in bound form, in quality three (3) ring binders (or other forms found acceptable by the Owner) with identification on the face and binder as to the equipment for which is applies.

SC-7.20 Add the following new section immediately following Paragraph 7.19G:

7.20 SURPLUS MATERIAL REMOVED. All parts of the WORK shall be kept in as neat and orderly condition as circumstances will permit and upon completion of the WORK all surplus material, earth, sand, rubbish and refuse of every kind, and all tools, machinery, equipment and other materials belonging to the Contractor shall be removed from the construction works and the adjoining premises, so as to leave everything in an acceptable condition, in as good or better condition than existed prior to construction.

Copyright© 2018 National Society of Professional Engineers, American Council of Engineering Companies, and American Society of Civil Engineers. All rights reserved.

Article 8 - **OTHER WORK AT THE SITE**

SC-8.01 Add the following new paragraph immediately following Paragraph 8.01 F:

8.01 G The site is an active and functioning waste water treatment plant that will remain in operation at all times. Plant workers will be required to access and maintain all plant operations. Additionally, a Phase 1 Construction Contract will be ongoing which includes construction of a new Control Building, and selective demolition / improvements to the existing control building (New Dewatering Building). It will be the Contractors responsibility to familiarize themselves with these operations and staging areas. It is the Contractors responsibility to coordinate Work of all contracts with the Engineer and the Owner.

Article 9 - **OWNER'S RESPONSIBILITIES**

No suggested Supplementary Conditions in this Article.

Article 10 - **ENGINEER'S STATUS DURING CONSTRUCTION**

No suggested Supplementary Conditions in this Article.

Article 11 - **CHANGES TO THE CONTRACT**

No suggested Supplementary Conditions in this Article.

Article 12 - **CLAIMS**

No suggested Supplementary Conditions in this Article.

Article 13 - **COST OF WORK; ALLOWANCE UNIT PRICE WORK**

SC-13.01 Add the following new section immediately following Paragraph 13.01E:

13.01 F. CLAIMS FOR EXTRA COST.

If the Contractor claims that any instructions by specifications, contract documents or otherwise involve extra cost or the extension of time, he shall, within seven (7) days after receipt of such instructions, and in any event before proceeding to execute the WORK, submit his protest thereto in writing to the OWNER with copy to the Engineer, stating clearly and in detail the basis of his objections. No such claim for a change in Contract Price and/or time will be considered unless written notice shall be so made within the aforementioned seven (7) day period.

Claims for additional compensation for extra work, due to alleged errors in ground elevations, contour lines, or bench marks, will not be recognized unless accompanied by survey data, certified by a Professional Surveyor, licensed in the State in which the work

Copyright© 2018 National Society of Professional Engineers, American Council of Engineering Companies, and American Society of Civil Engineers. All rights reserved.

is performed, made prior to the time the original ground was disturbed, clearly showing that errors exist which resulted, or would result, in handling more material, or performing more work, than would be reasonably estimated from the drawings and maps issued.

Article 14 - **TESTS AND INSPECTIONS; CORRECTION, REMOVAL, OR ACCEPTANCE OF DEFECTIVE WORK**

No suggested Supplementary Conditions in this Article.

Article 15 - **PAYMENTS TO CONTRACTOR, SET OFFS; COMPLETIONS; CORRECTION PERIOD**

No suggested Supplementary Conditions in this Article.

Article 16 - **SUSPENSION OF WORK AND TERMINATION**

No suggested Supplementary Conditions in this Article.

Article 17 - **FINAL RESOLUTIONS OF DISPUTES**

No suggested Supplementary Conditions in this Article.

Article 18 - **MISCELLANEOUS**

SC-18.08 Add the following paragraphs immediately following Paragraph 18.08.A.

18.08.B. <u>ASSIGNMENT OF CONTRACT.</u>

B. The contract dated November 2022 between Owner as "buyer" and Veolia Water Technologies & Solutions (F.K.A. Suez WTS USA, Inc.) as "seller" for procurement of goods and special services ("procurement contract") will be assigned to Contractor by Owner, and Contractor will accept such assignment. A form documenting the assignment is attached as an exhibit to this Contract.

1. This assignment will occur on the **Effective Date of the Contract**, and will relieve the Owner as "buyer" from all further obligations and liabilities under the procurement contract.

2. Upon assignment, the "seller" will be a Subcontractor or Supplier of the Contractor, and Contractor will be responsible for seller's performance, acts, and omissions, as set forth in Paragraph 7.07 of the General Conditions just as Contractor is responsible for all other Subcontractors and Suppliers.

Copyright© 2018 National Society of Professional Engineers, American Council of Engineering Companies, and American Society of Civil Engineers. All rights reserved.

3. Notwithstanding this assignment, all performance guarantees and warranties required by the procurement contract will continue to run for the benefit of the Owner and, in addition, for the benefit of the Contractor.

4. Except as noted in the procurement contract, all rights, duties and obligations of Engineer to "buyer" and "seller" under the procurement contract will cease upon the assignment to Contractor.

SC-18.11 Add the following paragraphs immediately following Paragraph 18.10

18.11 PROJECT LABOR AGREEMENT.

A. The project is bid as a single Prime Construction Project due to a Wick's Law exemption permitted through the Town's Project Labor Agreement (PLA). All work depicted on the plans and in the specifications is the responsibility of the successful bidder including any work identified as Mechanical, Plumbing, or Electrical Contract. The PLA is included in Exhibit G.

18.12 PROJECT FUNDING.

A. The project is funded through assistance with NYS Environmental Facilities Corporation (EFC). Contractor shall be aware of, familiarize themselves with, and comply with all EFC requirements found throughout the contract documents and bid package.

Copyright© 2018 National Society of Professional Engineers, American Council of Engineering Companies, and American Society of Civil Engineers. All rights reserved.

SUPPLEMENTARY CONDITIONS, PART 2 OF THE CONSTRUCTION CONTRACT

Article 19 - **NEW YORK STATE LABOR LAW**

The Contractor shall comply in every respect with the provisions of Section 220 of the Labor Law and no laborer, workers, or mechanic in the employ of the Contractor, subcontractor or other person contracting to do the whole or part of the work contemplated by this Contract, shall be permitted or required to work more than eight (8) hours in any one calendar day or more than five (5) days in any one week except in cases of extraordinary emergency including fire, flood, or danger to life or property, and no such person shall be so employed more than eight (8) hours in any day or more than five (5) days in any one week, except in such an emergency. The wages to be paid for a legal day's work, as defined by said section, to laborers, workmen or mechanics employed as aforesaid shall be not less than the prevailing rate for a day's work in the same trade or occupation in the locality within the State where the aforesaid work, on, about or in connection with which such labor is performed in its final or completed form is to be situated, erected, or used. Laborers shall be paid not less than the minimum hourly rate or wage designated by the Industrial Commissioner, pursuant to Section 220-d of the Labor Law. Said minimum hourly rate of wages having been designated by the Industrial Commissioner are designated in the wage rate sheet forming a part of this Contract, and are to be paid in cash, provided, however, that an employer, except as otherwise provided in Subdivision 3.0 Section 220 of the State Labor Law, may pay his employees by check if he furnishes satisfactory proof to the Industrial Commissioner of his financial responsibility and gives reasonable assurance that such checks may be cashed by employees without difficulty and for the full amount for which they are drawn. The Contractor shall abide by and pay workmen, laborers and mechanics employed either by himself or a subcontractor no less than the wage rate set forth on the schedule of wages as annexed to and forming a part of the specifications for the work involved in the contract pursuant to the Labor Law.

The Contractor shall comply with the provisions of Section 222A of the Labor Law relating to prevention of dust hazard in public works if such hazard shall exist. If said section is not complied with by the Contractor, the Contract shall be void.

A. **QUALIFICATION FOR EMPLOYMENT**.

No person under the age of sixteen (16) years and no person currently serving sentence in a penal or correctional institution shall be employed to perform any work on the project under this contract. No person whose age or physical condition is such as to make his employment dangerous to his health or safety or to the health and safety of others shall be employed to perform any work on the project under this contract; provided that this sentence shall not operate against the employment of physically handicapped persons, otherwise employable, where such persons may be safely assigned to work which they can ably perform.

All employees engaged in work on the project under this contract shall have the right to organize and bargain collectively through representatives of their own choosing and such employees shall be free from interference, restraint, and coercion of employers in designation of such employee

Copyright© 2018 National Society of Professional Engineers, American Council of Engineering Companies, and American Society of Civil Engineers. All rights reserved.

representatives, in the self-organization and in other concerted activities of such employees, for the purpose of collective bargaining or other mutual aid or protection and no person seeking employment on the project under this contract and no person employed on the project under this contract shall be required as a condition of the initial or continued employment to join any company union or to refrain from joining, organizing, or assisting a labor organization of such person's own choosing.

B. **DISCRIMINATION**.

The Contractor shall comply with the provisions of Section 220-e of the Labor Law as follows:

1. That in the hiring of employees for the performance of work under this contract or any subcontract hereunder, no contractor, or subcontractor, or any person acting on behalf of such contractor or subcontractor, shall by reason of age, race, creed, color, national origin, sexual orientation, gender identity or expression, military status, sex, disability, predisposing genetic characteristics, familial status, marital status, or status as a victim of domestic violence discriminate against any citizen of the State of New York who is qualified and available to perform the work to which the employment relates;
2. That no contractor, subcontractor, or any person on his behalf shall, in any manner, discriminate against or intimidate any employee hired for performance of work under this contract on account of race, creed, color, disability, sex or national origin;
3. That there may be deducted from the amount payable to the contractor by the State or municipality under this contract a penalty of fifty (50) dollars for each person for each calendar day during which such person was discriminated against or intimidated in violation of the provisions of the contract;
4. That this contract may be cancelled or terminated by the State or municipality, and all the monies due or to become due hereunder may be forfeited, for a second or any subsequent violation of the terms or conditions of this section of the contract; and
5. The aforesaid provisions of this section covering every contract for or on behalf of the State or a municipality for the manufacture, sale or distribution of materials, equipment or supplies shall be limited to operations performed within the territorial limits of the State of New York.
6. The Contractor's attention is also called to the State Law Against Discrimination, which also prohibits discrimination in employment because of age and sex.

C. **WAGE RATE**.

There shall be paid each employee engaged in work on the project under this contract in the trade or occupation listed not less than the wage rate set opposite the same, as shown on the attached Prevailing Rate Schedule.

D. **SUPPLEMENTS**.

Article 8, Section 220 of the Labor Law, as amended by Chapter 750 of the Laws of 1956, provides, among other things, that it shall be the duty of the fiscal officer to make a determination of the schedule of wages to be paid to all laborers, workmen and mechanics employed on the public work

Copyright© 2018 National Society of Professional Engineers, American Council of Engineering Companies, and American Society of Civil Engineers. All rights reserved.

projects including supplements for welfare, pension, vacation and other benefits. These supplements may include hospital, surgical, or medical insurance or benefits; life insurance or death benefits; accidental death or dismemberment insurance; and pensions or retirement benefits. If the amount of supplements provided by the employer is less than the total supplements shown on the wage schedule, the difference shall be paid in cash to employees.

1. Article 8, Section 220 of the Labor Law, as amended by Chapter 750 of the Laws of 1956, also provides, that supplements to be provided to laborers, workmen and mechanics upon the public works "shall be in accordance with the prevailing practices in the locality...". The amount for supplements listed on the enclosed schedule does not necessarily include all types of prevailing supplements in the locality, and a future determination of the Industrial Commissioner may require the Contractor to provide the additional supplements.

2. The Contractor shall provide the statutory benefits for disability benefits, workmen's compensation, unemployment insurance and social security.

E. **UNLISTED WAGE RATE**.

In case it becomes necessary for the Contractor or any subcontractor to employ on the project under this Contract any person in a trade or occupation (except executive, supervisory, clerical, administrative, or other non-manual workers as such) for which no minimum rate is herein specified, the Contractor shall immediately notify the Owner who will promptly thereafter furnish the Contractor with the minimum rate. The minimum rate thus furnished shall be applicable as a minimum for such trade or occupation from the time of the initial employment of the person affected and during the continuance of such employment.

F. **POSTING MINIMUM WAGE RATES**.

The Contractor shall post at conspicuous points on the site of the project a schedule showing all determined minimum wage rates and all authorized deductions, if any, from unpaid wages actually earned.

G. **WICKS LAW PROVISIONS. (NEW YORK STATE)** Where separate prime contracts are not required:

Each bidder on this project, “where the preparation of separate specifications is not required,” shall submit with its bid a separate sealed list that names each subcontractor that the bidder will use to perform work on the contract, and the agreed-upon amount to be paid to each, for: (a) plumbing and gas fitting, (b) steam heating, hot water heating, ventilating and air conditioning apparatus and (c) electric wiring and standard illuminating fixtures. After the low bid is announced; the sealed list of subcontractors submitted with such low bid will be opened and names of such subcontractors shall be announced, and thereafter any change of subcontractor or agreed-upon amount to be paid to each shall require the approval of the owner, upon a showing presented to the public owner of legitimate construction need for such change, which shall be open to public inspection. Legitimate construction need shall include, but not be limited to, a change in project specifications, a change in construction material costs, a change to subcontractor status as determined pursuant to paragraph (e) of subdivision two of section two hundred twenty-two of the labor law, or the subcontractor has become

Copyright© 2018 National Society of Professional Engineers, American Council of Engineering Companies, and American Society of Civil Engineers. All rights reserved.

otherwise unwilling, unable or unavailable to perform the subcontract. The sealed lists of subcontractors submitted by all other bidders will be returned to them unopened after the contract award. A separate form is included in the proposal pages for this purpose.

H. NEW YORK STATE ANTI-SEXUAL HARASSMENT LAWS.

Each bidder (and all Contractors awarded work) on this project must comply with the requirements of Section 201-G of the Labor Law, and shall have implemented a written policy addressing sexual harassment prevention in the workplace and shall provide annual training to all of its employees. Contractors shall also be required to comply with any specific provisions of the Owner (as applicable). Prospective bidders are required to complete the "Affidavit of Compliance with New York State Anti-Sexual Harassment Laws" as included in the Proposal.

Copyright© 2018 National Society of Professional Engineers, American Council of Engineering Companies, and American Society of Civil Engineers. All rights reserved.

Contractor's Application for Payment

Owner:	Town of New Windsor	**Owner's Project No.:**	
Engineer:	MHE Engineering, D.P.C.	**Engineer's Project No.:**	18-732
Contractor:		**Contractor's Project No.:**	
Project:	Caesars Lane Wastewater Treatment Plan Expansion Phase 2 Project		
Contract:			
Application No.:		**Application Date:**	
Application Period:	**From**	**to**	

1. Original Contract Price				$ -
2. Net change by Change Orders				$ -
3. Current Contract Price (Line 1 + Line 2)				$ -
4. Total Work completed and materials stored to date (Sum of Column G Lump Sum Total and Column J Unit Price Total)				$ -
5. Retainage				
a.	X	$ -	Work Completed =	$ -
b.	X	$ -	Stored Materials =	$ -
c. Total Retainage (Line 5.a + Line 5.b)				$ -
6. Amount eligible to date (Line 4 - Line 5.c)				$ -
7. Less previous payments (Line 6 from prior application)				
8. Amount due this application				$ -
9. Balance to finish, including retainage (Line 3 - Line 4 + Line 5.c)				$ -

Contractor's Certification

The undersigned Contractor certifies, to the best of its knowledge, the following:

(1) All previous progress payments received from Owner on account of Work done under the Contract have been applied on account to discharge Contractor's legitimate obligations incurred in connection with the Work covered by prior Applications for Payment;

(2) Title to all Work, materials and equipment incorporated in said Work, or otherwise listed in or covered by this Application for Payment, will pass to Owner at time of payment free and clear of all liens, security interests, and encumbrances (except such as are covered by a bond acceptable to Owner indemnifying Owner against any such liens, security interest, or encumbrances); and

(3) All the Work covered by this Application for Payment is in accordance with the Contract Documents and is not defective.

Contractor:

Signature: **Date:**

Recommended by Engineer		**Approved by Owner**	
By:		**By:**	
Title:		**Title:**	
Date:		**Date:**	
Approved by Funding Agency			
By:		**By:**	
Title:		**Title:**	
Date:		**Date:**	

(c) 2018 National Society of Professional Engineers for EJCDC. All rights reserved.

Progress Estimate - Lump Sum Work

Contractor's Application for Payment

Owner:	Town of New Windsor	**Owner's Project No.:**	
Engineer:	MHE Engineering, D.P.C.	**Engineer's Project No.:**	18-732
Contractor:		**Contractor's Project No.:**	
Project:	Caesars Lane Wastewater Treatment Plan Expansion Phase 2 Project		
Contract:			

Application No.: _____ **Application Period:** **From** _____ **to** _____ **Application Date:** _____

A	B	C	D	E	F	G	H	I
			Work Completed					
Item No.	Description	Scheduled Value ($)	(D + E) From Previous Application ($)	This Period ($)	Materials Currently Stored (not in D or E) ($)	Work Completed and Materials Stored to Date (D + E + F) ($)	% of Scheduled Value (G / C) (%)	Balance to Finish (C - G) ($)
			Original Contract					
						-		-
						-		-
						-		-
						-		-
						-		-
						-		-
						-		-
						-		-
						-		-
						-		-
						-		-
						-		-
						-		-
						-		-
						-		-
						-		-
						-		-
						-		-
						-		-
						-		-
						-		-
	Original Contract Totals	$ -	$ -	$ -	$ -	$ -		$ -

EJCDC C-620 Contractor's Application for Payment

(c) 2018 National Society of Professional Engineers for EJCDC. All rights reserved.

Progress Estimate - Lump Sum Work

Contractor's Application for Payment

Owner:	Town of New Windsor	**Owner's Project No.:**	
Engineer:	MHE Engineering, D.P.C.	**Engineer's Project No.:**	18-732
Contractor:		**Contractor's Project No.:**	
Project:	Caesars Lane Wastewater Treatment Plan Expansion Phase 2 Project		
Contract:			

Application No.: _____ **Application Period:** **From** _____ **to** _____ **Application Date:** _____

A	B	C	D	E	F	G	H	I
			Work Completed					
Item No.	Description	Scheduled Value ($)	(D + E) From Previous Application ($)	This Period ($)	Materials Currently Stored (not in D or E) ($)	Work Completed and Materials Stored to Date (D + E + F) ($)	% of Scheduled Value (G / C) (%)	Balance to Finish (C - G) ($)
Change Orders								
						-		-
						-		-
						-		-
						-		-
						-		-
						-		-
						-		-
						-		-
						-		-
						-		-
						-		-
						-		-
						-		-
						-		-
						-		-
						-		-
						-		-
						-		-
						-		-
						-		-
						-		-
	Change Order Totals	$ -	$ -	$ -	$ -	$ -		$ -
Original Contract and Change Orders								
	Project Totals	$ -	$ -	$ -	$ -	$ -		$ -

(c) 2018 National Society of Professional Engineers for EJCDC. All rights reserved.

Progress Estimate - Unit Price Work

Contractor's Application for Payment

Owner: Town of New Windsor
Engineer: MHE Engineering, D.P.C.
Contractor:
Project: Caesars Lane Wastewater Treatment Plan Expansion Phase 2 Project
Contract:

Owner's Project No.:
Engineer's Project No.: 18-732
Contractor's Project No.:

Application No.: **Application Period:** **From** **to** **Application Date:**

A	B	C	D	E	F	G	H	I	J	K	L
		Contract Information				Work Completed					
Bid Item No.	Description	Item Quantity	Units	Unit Price ($)	Value of Bid Item (C X E) ($)	Estimated Quantity Incorporated in the Work	Value of Work Completed to Date (E X G) ($)	Materials Currently Stored (not in G) ($)	Work Completed and Materials Stored to Date (H + I) ($)	% of Value of Item (J / F) (%)	Balance to Finish (F - J) ($)
Original Contract											
					-		-		-		-
					-		-		-		-
					-		-		-		-
					-		-		-		-
					-		-		-		-
					-		-		-		-
					-		-		-		-
					-		-		-		-
					-		-		-		-
					-		-		-		-
					-		-		-		-
					-		-		-		-
					-		-		-		-
					-		-		-		-
					-		-		-		-
					-		-		-		-
					-		-		-		-
					-		-		-		-
					-		-		-		-
					-		-		-		-
					-		-		-		-
				Original Contract Totals	$ -		$ -	$ -	$ -		$ -

EJCDC C-620 Contractor's Application for Payment
(c) 2018 National Society of Professional Engineers for EJCDC. All rights reserved.

Progress Estimate - Unit Price Work

Contractor's Application for Payment

Owner: Town of New Windsor
Engineer: MHE Engineering, D.P.C.
Contractor:
Project: Caesars Lane Wastewater Treatment Plan Expansion Phase 2 Project
Contract:

Owner's Project No.:
Engineer's Project No.: 18-732
Contractor's Project No.:

Application No.: **Application Period:** **From** **to** **Application Date:**

A	B	C	D	E	F	G	H	I	J	K	L
		Contract Information				Work Completed					
Bid Item No.	Description	Item Quantity	Units	Unit Price ($)	Value of Bid Item (C X E) ($)	Estimated Quantity Incorporated in the Work	Value of Work Completed to Date (E X G) ($)	Materials Currently Stored (not in G) ($)	Work Completed and Materials Stored to Date (H + I) ($)	% of Value of Item (J / F) (%)	Balance to Finish (F - J) ($)
Change Orders											
					-		-		-		-
					-		-		-		-
					-		-		-		-
					-		-		-		-
					-		-		-		-
					-		-		-		-
					-		-		-		-
					-		-		-		-
					-		-		-		-
					-		-		-		-
					-		-		-		-
					-		-		-		-
					-		-		-		-
					-		-		-		-
					-		-		-		-
					-		-		-		-
					-		-		-		-
					-		-		-		-
					-		-		-		-
					-		-		-		-
				Change Order Totals	$ -		$ -	$ -	$ -		$ -
Original Contract and Change Orders											
				Project Totals	$ -		$ -	$ -	$ -		$ -

EJCDC C-620 Contractor's Application for Payment
(c) 2018 National Society of Professional Engineers for EJCDC. All rights reserved.

Stored Materials Summary

Contractor's Application for Payment

Owner:	Town of New Windsor	**Owner's Project No.:**	
Engineer:	MHE Engineering, D.P.C.	**Engineer's Project No.:**	18-732
Contractor:		**Contractor's Project No.:**	
Project:	Caesars Lane Wastewater Treatment Plan Expansion Phase 2 Project		
Contract:			

Application No.: _____ **Application Period:** **From** _____ **to** _____ **Application Date:** _____

A	B	C	D	E	F	G	H	I	J	K	L	M
						Materials Stored			Incorporated in Work			
Item No. (Lump Sum Tab) or Bid Item No. (Unit Price Tab)	Supplier Invoice No.	Submittal No. (with Specification Section No.)	Description of Materials or Equipment Stored	Storage Location	Application No. When Materials Placed in Storage	Previous Amount Stored ($)	Amount Stored this Period ($)	Amount Stored to Date (G+H) ($)	Amount Previously Incorporated in the Work ($)	Amount Incorporated in the Work this Period ($)	Total Amount Incorporated in the Work (J+K) ($)	Materials Remaining in Storage (I-L) ($)
								-			-	-
								-			-	-
								-			-	-
								-			-	-
								-			-	-
								-			-	-
								-			-	-
								-			-	-
								-			-	-
								-			-	-
								-			-	-
								-			-	-
								-			-	-
								-			-	-
								-			-	-
								-			-	-
								-			-	-
								-			-	-
								-			-	-
								-			-	-
								-			-	-
					Totals	$ -	$ -	$ -	$ -	$ -	$ -	$ -

EJCDC C-620 Contractor's Application for Payment
(c) 2018 National Society of Professional Engineers for EJCDC. All rights reserved.

WORK CHANGE DIRECTIVE NO.: [Number of Work Change Directive]

Owner:	**Town of New Windsor**	Owner's Project No.:	
Engineer:	**MHE Engineering, D.P.C.**	Engineer's Project No.:	**18-732**
Contractor:		Contractor's Project No.:	
Project:	**Caesars Lane Wastewater Treatment Plant Expansion Phase 2 Project**		
Contract Name:			
Date Issued:		Effective Date of Work Change Directive:	

Contractor is directed to proceed promptly with the following change(s):

Description:

[Description of the change to the Work]

Attachments:

[List documents related to the change to the Work]

Purpose for the Work Change Directive:

[Describe the purpose for the change to the Work]

Directive to proceed promptly with the Work described herein, prior to agreeing to change in Contract Price and Contract Time, is issued due to:

Notes to User—Check one or both of the following

☐ Non-agreement on pricing of proposed change. ☐ Necessity to proceed for schedule or other reasons.

Estimated Change in Contract Price and Contract Times (non-binding, preliminary):

Contract Price: $ _____ **[increase] [decrease] [not yet estimated]**.

Contract Time: _____ days **[increase] [decrease] [not yet estimated]**.

Basis of estimated change in Contract Price:

☐ Lump Sum ☐ Unit Price ☐ Cost of the Work ☐ Other

	Recommended by Engineer	Authorized by Owner
By:		
Title:		
Date:		

EJCDC® C-940, Work Change Directive.
Copyright© 2018 National Society of Professional Engineers, American Council of Engineering Companies, and American Society of Civil Engineers. All rights reserved.

CHANGE ORDER NO.: [Number of Change Order]

Owner:	**Town of New Windsor**	Owner's Project No.:	
Engineer:	**MHE Engineering, D.P.C.**	Engineer's Project No.:	**18-732**
Contractor:		Contractor's Project No.:	
Project:	**Caesars Lane Wastewater Treatment Plant Expansion Phase 2 Project**		
Date Issued:		Effective Date of Change Order:	

The Contract is modified as follows upon execution of this Change Order:

Description:

[Description of the change]

Attachments:

[List documents related to the change]

Change in Contract Price	**Change in Contract Times [State Contract Times as either a specific date or a number of days]**
Original Contract Price: $ _____	Original Contract Times: Substantial Completion: _____ Ready for final payment: _____
[Increase] [Decrease] from previously approved Change Orders No. 1 to No. **[Number of previous Change Order]**: $ _____	**[Increase] [Decrease]** from previously approved Change Orders No.1 to No. **[Number of previous Change Order]**: Substantial Completion: _____ Ready for final payment: _____
Contract Price prior to this Change Order: $ _____	Contract Times prior to this Change Order: Substantial Completion: _____ Ready for final payment: _____
[Increase] [Decrease] this Change Order: $ _____	**[Increase] [Decrease]** this Change Order: Substantial Completion: _____ Ready for final payment: _____
Contract Price incorporating this Change Order: $ _____	Contract Times with all approved Change Orders: Substantial Completion: _____ Ready for final payment: _____

	Recommended by Engineer (if required)	Accepted by Contractor
By:	_____	_____
Title:	_____	_____
Date:	_____	_____
	Authorized by Owner	**Approved by Funding Agency (if applicable)**
By:	_____	_____
Title:	_____	_____
Date:	_____	_____

Copyright© 2018 National Society of Professional Engineers, American Council of Engineering Companies and American Society of Civil Engineers. All rights reserved.

FIELD ORDER NO.: [Number of Field Order]

Owner:	**Town of New Windsor**	Owner's Project No.:	
Engineer:	**MHE Engineering, D.P.C.**	Engineer's Project No.:	**18-732**
Contractor:		Contractor's Project No.:	
Project:	**Caesars Lane Wastewater Treatment Plant Expansion Phase 2 Project**		
Contract Name:			
Date Issued:		Effective Date of Field Order:	

Contractor is hereby directed to promptly perform the Work described in this Field Order, issued in accordance with Paragraph 11.04 of the General Conditions, for minor changes in the Work without changes in Contract Price or Contract Times. If Contractor considers that a change in Contract Price or Contract Times is required, submit a Change Proposal before proceeding with this Work.

Reference:

Specification Section(s):

Drawing(s) / Details (s):

Description:

[Description of the change to the Work]

Attachments:

[List documents supporting change]

Issued by Engineer

By: _____

Title: _____

Date: _____

Copyright© 2018 National Society of Professional Engineers, American Council of Engineering Companies and American Society of Civil Engineers. All rights reserved.

CERTIFICATE OF SUBSTANTIAL COMPLETION

Owner:	**Town of New Windsor**	Owner's Project No.:	
Engineer:	**MHE Engineering, D.P.C.**	Engineer's Project No.:	**18-732**
Contractor:		Contractor's Project No.:	
Project:	**Caesars Lane Wastewater Treatment Plant Expansion Phase 2 Project**		
Contract Name:			

This ☐ Preliminary ☐ Final Certificate of Substantial Completion applies to:

☐ All Work ☐ The following specified portions of the Work:

[Describe the portion of the work for which Certificate of Substantial Completion is issued]

Date of Substantial Completion: **[Enter date, as determined by Engineer]**

The Work to which this Certificate applies has been inspected by authorized representatives of Owner, Contractor, and Engineer, and found to be substantially complete. The Date of Substantial Completion of the Work or portion thereof designated above is hereby established, subject to the provisions of the Contract pertaining to Substantial Completion. The date of Substantial Completion in the final Certificate of Substantial Completion marks the commencement of the contractual correction period and applicable warranties required by the Contract.

A punch list of items to be completed or corrected is attached to this Certificate. This list may not be all-inclusive, and the failure to include any items on such list does not alter the responsibility of the Contractor to complete all Work in accordance with the Contract Documents.

Amendments of contractual responsibilities recorded in this Certificate should be the product of mutual agreement of Owner and Contractor; see Paragraph 15.03.D of the General Conditions.

The responsibilities between Owner and Contractor for security, operation, safety, maintenance, heat, utilities, insurance, and warranties upon Owner's use or occupancy of the Work must be as provided in the Contract, except as amended as follows:

Amendments to Owner's Responsibilities: ☐ None ☐ As follows:

[List amendments to Owner's Responsibilities]

Amendments to Contractor's Responsibilities: ☐ None ☐ As follows:

[List amendments to Contractor's Responsibilities]

The following documents are attached to and made a part of this Certificate:

[List attachments such as punch list; other documents]

This Certificate does not constitute an acceptance of Work not in accordance with the Contract Documents, nor is it a release of Contractor's obligation to complete the Work in accordance with the Contract Documents.

Engineer

By *(signature)*: _____

Name *(printed)*: _____

Title: _____

Copyright© 2018 National Society of Professional Engineers, American Council of Engineering Companies, and American Society of Civil Engineers. All rights reserved.

NOTICE OF ACCEPTABILITY OF WORK

Owner:	**Town of New Windsor**	Owner's Project No.:	
Engineer:	**MHE Engineering, D.P.C.**	Engineer's Project No.:	**18-732**
Contractor:		Contractor's Project No.:	
Project:	**Caesars Lane Wastewater Treatment Plant Expansion Phase 2 Project**		
Contract Name:			
Notice Date:		Effective Date of the Construction Contract:	

The Engineer hereby gives notice to the Owner and Contractor that Engineer recommends final payment to Contractor, and that the Work furnished and performed by Contractor under the Construction Contract is acceptable, expressly subject to the provisions of the Construction Contract's Contract Documents ("Contract Documents") and of the Agreement between Owner and Engineer for Professional Services dated **[date of professional services agreement]** ("Owner-Engineer Agreement"). This Notice of Acceptability of Work (Notice) is made expressly subject to the following terms and conditions to which all who receive and rely on said Notice agree:

1. This Notice has been prepared with the skill and care ordinarily used by members of the engineering profession practicing under similar conditions at the same time and in the same locality.
2. This Notice reflects and is an expression of the Engineer's professional opinion.
3. This Notice has been prepared to the best of Engineer's knowledge, information, and belief as of the Notice Date.
4. This Notice is based entirely on and expressly limited by the scope of services Engineer has been employed by Owner to perform or furnish during construction of the Project (including observation of the Contractor's Work) under the Owner-Engineer Agreement, and applies only to facts that are within Engineer's knowledge or could reasonably have been ascertained by Engineer as a result of carrying out the responsibilities specifically assigned to Engineer under such Owner-Engineer Agreement.
5. This Notice is not a guarantee or warranty of Contractor's performance under the Construction Contract, an acceptance of Work that is not in accordance with the Contract Documents, including but not limited to defective Work discovered after final inspection, nor an assumption of responsibility for any failure of Contractor to furnish and perform the Work thereunder in accordance with the Contract Documents, or to otherwise comply with the Contract Documents or the terms of any special guarantees specified therein.
6. This Notice does not relieve Contractor of any surviving obligations under the Construction Contract, and is subject to Owner's reservations of rights with respect to completion and final payment.

Engineer

By *(signature)*: _____

Name *(printed)*: _____

Title: _____

Copyright© 2018 National Society of Professional Engineers, American Council of Engineering Companies, and American Society of Civil Engineers. All rights reserved.

EXHIBIT A

EFC Mandatory State Financial Assistance Terms and Conditions

NEW YORK STATE | Environmental Facilities Corporation

KATHY HOCHUL
Governor

MAUREEN A. COLEMAN
President and CEO

Mandatory State Financial Assistance Terms and Conditions

For Contracts Funded with New York State Financial Assistance Only

Recipient to Identify Contract Type:

☒ **Construction**

☐ **Non-Construction**

Effective October 1, 2023

New York State Environmental Facilities Corporation
625 Broadway, Albany, NY 12207-2997
P: (518) 402-6924
www.efc.ny.gov

Contents

REQUIRED CONTRACT LANGUAGE 4
SECTION 1 REQUIREMENTS AND PROCEDURES FOR BUSINESS PARTICIPATION OPPORTUNITIES FOR NEW YORK STATE CERTIFIED MINORITY- AND WOMEN-OWNED BUSINESS ENTERPRISES AND EQUAL EMPLOYMENT OPPORTUNITIES FOR WOMEN AND MINORITY GROUP MEMBERS 5
I. General Provisions 5
II. Equal Employment Opportunities (EEO) 5
III. Business Participation Opportunities for MWBEs 6
A. Contract Goals 6
B. MWBE Utilization Plan 7
C. Request for Waiver 7
D. Monthly MWBE Contractor Compliance Report (“Monthly MWBE-SDVOB Report”) 8
E. Liquidated Damages - MWBE Participation 8
SECTION 2 PARTICIPATION OPPORTUNITIES FOR NEW YORK STATE CERTIFIED SERVICE-DISABLED VETERAN-OWNED BUSINESSES 9
I. General Provisions 9
II. Contract Goals 9
III. SDVOB Utilization Plan 9
IV. Request for Waiver 10
V. Monthly SDVOB Contractor Compliance Report (“Monthly MWBE-SDVOB Report”) 10
VI. Breach of Contract and Damages 10
SECTION 3 REQUIREMENTS REGARDING SUSPENSION AND DEBARMENT 10
SECTION 4 CONSTRUCTION SIGNS 10

ATTACHMENTS (Required Forms) 11
Attachment 1 – EEO Policy Statement 12
Attachment 2 – EFC MWBE Utilization Plan 13
Attachment 3 – EFC SDVOB Utilization Plan 14

INTRODUCTION

The terms and conditions below must be incorporated verbatim into contracts receiving State financial assistance without SRF financing. Additional information relating to each of the requirements is included in the companion guidance document.

REQUIRED CONTRACT LANGUAGE

COMMONLY USED TERMS

The following commonly used terms are defined herein as follows:

Broker means a firm that does not itself perform, manage or supervise the work of its contract or subcontract in a manner consistent with the normal business practices for contractors or subcontractors in its line of business.

Construction means the process by which a contractor or subcontractor builds, alters, repairs, remodels, improves or demolishes infrastructure.

Contract means an agreement between a Recipient and a Contractor.

Contractor means all bidders, prime contractors, non-construction service providers, and consultants as hereinafter defined, unless specifically referred to otherwise.

Manufacturer means a firm that operates or maintains a factory or establishment that produces, on the premises, the materials, supplies, articles, or equipment required under the Contract and of the general character described by the specifications.

MBO is designated and employed by the Recipient as a Minority Business or Compliance Officer responsible for MWBE/DBE/SDVOB/EEO reporting and compliance.

Non-Construction Provider means any individual or business enterprise that provides one or more of the following: legal, engineering, financial advisory, technical, or other professional services, supplies, commodities, equipment, materials, or travel.

Recipient means the party, other than EFC, to a grant agreement or a project finance agreement with EFC through which funds for the payment of amounts due thereunder are being paid in whole or in part. Responsible through Project Finance Agreement (PFA) to comply with EFC requirements.

State means the State of New York.

Subcontract means an agreement between a Contractor and a Subcontractor.

Subcontractor means any individual or business enterprise that has an agreement, purchase order, or any other contractual arrangement with a Contractor.

Supplier means a firm that owns, operates, or maintains a store, warehouse, or other establishment in which the materials, supplies, articles or equipment of the general character described by the specifications and required under the contract are bought, kept in stock, and regularly sold or leased to the public in the usual course of business.

SECTION 1 REQUIREMENTS AND PROCEDURES FOR BUSINESS PARTICIPATION OPPORTUNITIES FOR NEW YORK STATE CERTIFIED MINORITY- AND WOMEN-OWNED BUSINESS ENTERPRISES AND EQUAL EMPLOYMENT OPPORTUNITIES FOR WOMEN AND MINORITY GROUP MEMBERS

The Minority- and Women- Owned Business Enterprises ("MWBE") participation requirements of this section apply to the Contracts Meeting Article 15-A Thresholds.

***Contracts Meeting Article 15-A Thresholds** means Contracts or Subcontracts meeting the thresholds under New York State Executive Law Article 15-A as follows:*

a) Non-Construction Contracts greater than $25,000;
b) Non-Construction Contracts that are initially under $25,000 but subsequent change orders or contract amendments increase the Contract value to above $25,000;
c) Construction Contracts greater than $100,000; and,
d) Construction Contracts that are initially under $100,000 but subsequent change orders or contract amendments increase the Contract value to above $100,000.

Disregard this section if it does not apply to this Contract or Subcontract.

I. General Provisions

A. Contractors and Subcontractors are required to comply with New York State Executive Law Article 15-A and 5 NYCRR Parts 140-145 ("MWBE Regulations") for all State contracts meeting Article 15-A thresholds.

B. Upon request from the Recipient and/or EFC, Contractor will provide complete responses to inquiries and all MWBE and EEO records available within a reasonable time or as otherwise determined by EFC.

C. Failure to comply with all of the requirements herein may result in a finding by the Recipient that the Contractor is non-responsive, non-responsible, and/or has breached the Contract, leading to the withholding of funds or such other actions, liquidated damages pursuant to subsection III(F) of this section, or enforcement proceedings as allowed by the Contract.

D. If any terms or provisions herein conflict with Executive Law Article 15-A or the MWBE Regulations, such law and regulations shall supersede these requirements.

II. Equal Employment Opportunities (EEO)

The EEO participation requirements of this section apply to services and Commodities greater than $25,000 and construction contracts greater than $100,000.

A. Each Contractor and Subcontractor performing work on the Contract shall undertake or continue existing EEO programs to ensure that minority group members and women are afforded equal employment opportunities without discrimination because of race, creed, color, national origin, sex, age, disability or marital status. For these purposes, EEO shall apply in the areas of recruitment, employment, job assignment, promotion, upgrading, demotion, transfer, layoff, or termination and rates of pay or other forms of compensation.

B. Contractor represents that it has submitted an EEO policy statement, included as Attachment 1, to Recipient prior to the execution of this Contract including the following language:

1. The contractor will not discriminate on the basis of race, creed, color, national origin, sex, age, disability, or marital status against any employee or applicant for employment, will undertake or continue existing programs of affirmative action to ensure that minority group members and women are afforded equal employment opportunities without discrimination and will make and document its conscientious and active efforts to employ and utilize minority group members and women in its work force on Contracts relating to State financial assistance projects.

2. The Contractor shall state in all solicitations or advertisements for employees that, in the performance of the Contract relating to this State financial assistance project, all qualified applicants will be afforded equal employment opportunities without discrimination because of race, creed, color, national origin, sex, age, disability or marital status.

3. The Contractor shall request each employment agency, labor union, or authorized representative of workers with which it has a collective bargaining or other agreement or understanding, to furnish a written statement that such employment agency, labor union, or representative will not discriminate on the basis of race, creed, color, national origin, sex, age, disability or marital status, and that such union or representative will affirmatively cooperate in the implementation of the Contractor's obligations herein.

C. The Contractor will include the provisions of Subdivisions II(A), II(B), and II(D) in every Subcontract in such a manner that the requirements of these subdivisions will be binding upon each Subcontractor as to work in connection with the Contract.

D. The Contractor shall comply with the provisions of the Human Rights Law (Executive Law Article 15), and all other State and Federal statutory and constitutional non-discrimination provisions. The Contractor and Subcontractors shall not discriminate against any employee or applicant for employment because of race, creed (religion), color, sex, national origin, sexual orientation, military status, age, disability, predisposing genetic characteristic, marital status or domestic violence victim status, and shall also follow the requirements of the Human Rights Law with regard to non-discrimination on the basis of prior criminal conviction and prior arrest.

III. Business Participation Opportunities for MWBEs

Applicable to Contracts Meeting Article 15-A Thresholds

A. Contract Goals

1. ***New York State certified MWBE participation goals for this contract are 30%***. For NYS Water Infrastructure Improvement Act Grants and NYS Intermunicipal Grants that are not receiving EFC financing, the goals may be achieved through any combination of MBE and/or WBE participation.

2. For purposes of providing meaningful participation by MWBEs on the Contract and achieving the MWBE Contract Goals established in Section III-A hereof, the Contractor should reference the directory of New York State Certified MWBEs found at https://ny.newnycontracts.com.

3. The Contractor understands that only sums paid to MWBEs for the performance of a commercially useful function, as that term is defined in 5 NYCRR § 140.1, may be applied towards achievement of applicable MWBE participation goals.

   a. For construction and construction-related services Contracts or Subcontracts, the portion of the Contract or Subcontract with an MWBE serving as a Supplier, and so designated in ESD's Directory, that shall be deemed to represent the commercially useful function performed by the MWBE shall be 60% of the total value of the Contract or Subcontract. The portion of a Contract or Subcontract with an MWBE serving as a Broker, as denoted by NAICS code 425120, that shall

be deemed to represent the commercially useful function performed by the MWBE shall be the monetary value for fees, or the markup percentage, charged by the MWBE.

b. For non-construction Contracts or Subcontracts, the portion of a Contract or Subcontract with an MWBE serving as a Broker that shall be deemed to represent the commercially useful function performed by the MWBE shall be 25% of the total value of the contract

4. Where MWBE Contract Goals have been established herein, pursuant to 5 NYCRR § 142.8, the Contractor must document "good faith efforts" to provide meaningful participation by MWBEs as Subcontractors or Suppliers in the performance of the Contract.

5. In accordance with Section 316-a of Article 15-A and 5 NYCRR § 142.13, the Contractor acknowledges that if it is found to have willfully and intentionally failed to comply with the MWBE participation goals set forth in the Contract, such a finding constitutes a breach of Contract and the Contractor shall be liable to the Recipient for liquidated or other appropriate damages, as set forth herein.

B. MWBE Utilization Plan

1. The Contractor represents and warrants that Contractor has submitted a completed copy of the MWBE Utilization Plan with all required bid forms to the MBO no later than the execution date of this Contract. A sample utilization plan is included as Attachment 2.

2. The Contractor agrees to use such MWBE Utilization Plan for the performance of MWBEs on the Contract pursuant to the prescribed MWBE goals set forth in Section III-A of this section.

3. The Contractor further agrees that a failure to submit and/or use such MWBE Utilization Plan shall constitute a material breach of the terms of the Contract. Upon the occurrence of such a material breach, the Recipient shall be entitled to any remedy provided herein, including but not limited to, a finding that the Contractor is not responsive.

4. The Contractor must report any changes to the Utilization Plan after Contract award and during the term of the Contract to the MBO. The Contractor shall indicate the changes to the MBO in the Monthly MWBE-SDVOB Contractor Compliance Report immediately following the change. At EFC's discretion, an updated MWBE Utilization Plan form and good faith effort documentation may be required to be submitted. When a Utilization Plan is revised due to execution of a change order, the change order should be submitted to the MBO with the Monthly MWBE-SDVOB Contractor Compliance Report or revised Utilization Plan.

5. The Contractor shall submit copies of all fully executed Subcontracts, agreements, and purchase orders that are referred to in the MWBE Utilization Plan to the MBO within 30 days of their execution.

C. Request for Waiver

1. If the Contractor, after making good faith efforts, is unable to comply with MWBE goals, the Contractor may submit a Request for Waiver to the MBO documenting good faith efforts by the Contractor to meet such goals. If the documentation included with the waiver request aligns with the documentation identified on the Request for Waiver form, the MBO shall forward the request to EFC for evaluation, and EFC will issue a written notice of acceptance or denial within twenty (20) days of receipt.

2. If the MBO, upon review of the MWBE Utilization Plan and updated Quarterly MWBE Contractor Compliance Reports determines that the Contractor is failing or refusing to comply with the MWBE Contract Goals and no waiver has been issued in regards to such non-compliance, the Recipient may issue a notice of deficiency to the Contractor. The Contractor must respond to the notice of deficiency within seven (7) business days of receipt. Such response may include a request for partial or total waiver of MWBE Contract Goals.

D. Monthly MWBE Contractor Compliance Report ("Monthly MWBE-SDVOB Report")

1. The Contractor agrees to submit a report to the MBO by the third business day following the end of each month over the term of this Contract documenting the payments made and the progress towards achievement of the MWBE goals of the Contract. The Monthly MWBE-SDVOB Report must be supplemented with proof of payment by the Contractor to its Subcontractors (e.g., copies of both sides of a cancelled check) and proof that Subcontractors have been paid within 30 days of receipt of payment from the Recipient. The final Monthly MWBE-SDVOB Report must reflect all Utilization Plan revisions and change orders.

E. Liquidated Damages - MWBE Participation

1. In accordance with Section 316-a of Article 15-A and 5 NYCRR §142.13, if it has been determined by the Recipient or EFC that the Contractor has willfully and intentionally failed to comply with the MWBE participation goals, the Contractor shall be obligated to pay to Recipient liquidated damages or other appropriate damages, as specified herein and as determined by the Recipient or EFC.

2. Liquidated damages shall be calculated as an amount not to exceed the difference between:

   a. All sums identified for payment to MWBEs had the Contractor achieved the approved MWBE participation goals; and,
   b. All sums actually paid to MWBEs for work performed or materials supplied under this Contract.

3. The Recipient and EFC reserve the right to impose a lesser amount of liquidated damages than the amount calculated above based on the circumstances surrounding the Contractor's non-compliance.

4. In the event a determination has been made by the Recipient or EFC which requires the payment of damages identified herein and such identified sums have not been withheld, Contractor shall pay such damages to the Recipient within sixty (60) days after they are assessed unless prior to the expiration of such sixtieth day the Contractor has filed a complaint with the Empire State Development Corporation – Division of Minority and Women's Business Development ("ESD") pursuant to Subdivision 8 of Section 313 of the Executive Law in which event the damages shall be payable if the Director of ESD renders a decision in favor of the Recipient.

SECTION 2 PARTICIPATION OPPORTUNITIES FOR NEW YORK STATE CERTIFIED SERVICE-DISABLED VETERAN-OWNED BUSINESSES

The Service-Disabled Veteran-Owned Businesses ("SDVOB") participation requirements of this section apply to the Contracts Meeting Article 3 Thresholds.

> ***Contracts Meeting Article 3 Thresholds*** *means Contracts or Subcontracts meeting the thresholds under New York State Veterans' Services Law, Article 3 as follows:*
>
> *a) Non-Construction Provider Contracts greater than $25,000;*
> *b) Non-Construction Provider Contracts, that are initially under $25,000 but subsequent change orders or contract amendments increase the Contract value to above $25,000;*
> *c) Construction Contracts greater than $100,000; and,*
> *d) Construction Contracts that are initially under $100,000 but subsequent change orders or contract amendments increase the Contract value to above $100,000.*

Disregard this section if it does not apply to this Contract or Subcontract.

I. General Provisions

A. Contractors and Subcontractors are required to comply with New York State Veterans' Services Law, Article 3, and 9 NYCRR Part 252, and/or any other related regulations promulgated thereto for all State contracts meeting Article 3 thresholds.

II. Contract Goals

A. ***New York State certified SDVOB participation goals for this contract are 6%***. For purposes of providing meaningful participation by SDVOBs, the Contractor should reference the directory of New York State Certified SDVOBs found at: https://online.ogs.ny.gov/SDVOB/search.

B. Pursuant to 9 NYCRR § 252.2(n), Contractor must document "good faith efforts" to provide meaningful participation by SDVOBs as subcontractors or Suppliers in the performance of the Contract.

III. SDVOB Utilization Plan

A. In accordance with 9 NYCRR § 252.2, the Contractor represents and warrants that it has submitted a completed SDVOB Utilization Plan with all required bid forms to the MBO no later than the execution date of this Contract. A sample utilization plan is included as Attachment 3.

B. The Contractor certifies that it will follow the submitted SDVOB Utilization Plan for the performance of SDVOBs on the Contract pursuant to the prescribed SDVOB contract goal set forth above.

C. The Contractor further agrees that a failure to use SDVOBs as agreed in the Utilization Plan shall constitute a material breach of the terms of the Contract. Upon the occurrence of such a material breach, the Recipient shall be entitled to any remedy provided herein, including but not limited to, a finding that the Contractor is not responsible.

D. The Contractor must report any changes to the Utilization Plan after Contract award and during the term of the Contract to the MBO. The Contractor shall indicate the changes to the MBO in the Monthly MWBE-SDVOB Contractor Compliance Report immediately following the change. At EFC's discretion, an updated SDVOB Utilization Plan form and good faith effort documentation may be required to be submitted. When a Utilization Plan is revised due to execution of a change order, the change order should be submitted to the MBO with the Monthly MWBE/SDVOB Contractor Compliance Report or revised Utilization Plan.

E. The Contractor shall submit copies of all fully executed subcontracts, agreements, and purchase orders that are referred to in the SDVOB Utilization Plan to the MBO within 30 days of their execution.

IV. Request for Waiver

A. If the Contractor, after making good faith efforts, is unable to comply with the SDVOB Contract goal, the Contractor may submit a request for a partial or total waiver on the SDVOB Request for Waiver form to the MBO, documenting good faith efforts by the Contractor to meet such goal. If the documentation included with the waiver request aligns with the documentation identified on the Request for Waiver form, the MBO shall forward the request to EFC for evaluation, and EFC will issue a written notice of acceptance or denial within twenty (20) days of receipt.

B. The Contractor shall attempt to utilize, in good faith, the SDVOBs identified within its SDVOB Utilization Plan, during the performance of the Contract. Requests for a partial or total waiver of established goal requirements made subsequent to Contract award may be made at any time during the term of the Contract to the MBO but must be made no later than prior to the submission of a request for final payment on the Contract.

C. If the Recipient, upon review of the SDVOB Utilization Plan and Monthly SDVOB Contractor Compliance Report determines that Contractor is failing or refusing to comply with the SDVOB Contract goal and no waiver has been issued in regard to such non-compliance, the Recipient may issue a notice of deficiency to Contractor. Contractor must respond to the notice of deficiency within seven business days of receipt. Such response may include a request for partial or total waiver of SDVOB Contract goals.

V. Monthly SDVOB Contractor Compliance Report ("Monthly MWBE-SDVOB Report")

A. In accordance with 9 NYCRR § 252.2(q), Contractor is required to report monthly SDVOB contractor compliance to the MBO during the term of the Contract for the preceding month's activity, documenting progress made towards achieving the Contract SDVOB goals. The Contractor agrees to submit a report to the MBO by the third business day following the end of each month over the term of this Contract. The Monthly MWBE-SDVOB Report must be supplemented with proof of payment by the Contractor to its Subcontractors (e.g., copies of both sides of a cancelled check). The final Monthly MWBE-SDVOB Report must reflect all Utilization Plan revisions and change orders.

VI. Breach of Contract and Damages

A. In accordance with 9 NYCRR § 252.2(s), any Contractor found to have willfully and intentionally failed to comply with the SDVOB participation goals set forth in the Contract, shall be found to have breached the contract and Contractor shall pay damages as set forth therein.

SECTION 3 REQUIREMENTS REGARDING SUSPENSION AND DEBARMENT

The requirements of this section apply to all Contracts and Subcontracts.

The Contractor and any Subcontractors have not been deemed ineligible to submit a bid on or be awarded a public contract or subcontract pursuant to Article 8 of the State Labor Law, specifically Labor Law § 220-b. In addition, neither the Contractor nor any Subcontractors have contracted with, or will contract with, any party that has been deemed ineligible to submit a bid on or be awarded a public contract or subcontract under Labor Law § 220-b.

In addition, the Contractor and any Subcontractors have not been deemed ineligible to submit a bid and have not contracted with and will not contract with any party that has been deemed ineligible to submit a bid under Executive Law § 316.

SECTION 4 CONSTRUCTION SIGNS

The requirements of this section apply to all EFC projects.

If Contractor is expected to provide an EFC Construction Sign, a specification will be included in the enclosed contract documents.

ATTACHMENTS (Required Forms)

Attachment 1 – EEO Policy Statement

New York State Environmental Facilities Corporation
EQUAL EMPLOYMENT OPPORTUNITY POLICY STATEMENT
NEW YORK STATE FINANCIAL ASSISTANCE PROGRAMS

I, _____, am the authorized representative of _____.
Name of Representative Name of Contractor/Service Provider
I hereby certify that _____ will abide by the equal employment
Name of Contractor/Service Provider
opportunity (EEO) policy statement provisions outlined below.

(i) The Contractor will not discriminate on the basis of race, creed, color, national origin, sex, age, disability, or marital status against any employee or applicant for employment, will undertake or continue existing programs of affirmative action to ensure that minority group members and women are afforded equal employment opportunities without discrimination and will make and document its conscientious and active efforts to employ and utilize minority group members and women in its work force on Contracts relating to Water Grant projects.

(ii) The Contractor shall state in all solicitations or advertisements for employees that, in the performance of the Contract relating to this Water Grant project, all qualified applicants will be afforded equal employment opportunities without discrimination because of race, creed, color, national origin, sex, age, disability or marital status.

(iii) The Contractor shall request each employment agency, labor union, or authorized representative of workers with which it has a collective bargaining or other agreement or understanding, to furnish a written statement that such employment agency, labor union, or representative will not discriminate on the basis of race, creed, color, national origin, sex, age, disability or marital status, and that such union or representative will affirmatively cooperate in the implementation of the Contractor's obligations herein.

(iv) The Contractor shall comply with the provisions of the Human Rights Law (Article 15 of the Executive Law), including those relating to non-discrimination on the basis of prior criminal conviction and prior arrest, and with all other State and federal statutory and constitutional non-discrimination provisions. The Contractor and Subcontractors shall not discriminate against any employee or applicant for employment because of race, creed (religion), color, sex, national origin, sexual orientation, military status, age, disability, predisposing genetic characteristic, marital status or domestic violence victim status.

(v) The Contractor will include the provisions of subdivisions (i) through (iv) in every Subcontract in such a manner that the requirements of these subdivisions will be binding upon each Subcontractor as to work in connection with the Contract.

X _____

Contractor/Service Provider Representative

Attachment 2 – EFC MWBE Utilization Plan

NYS Environmental Facilities Corporation
Minority- & Women- Owned Business Enterprise (MWBE) Utilization Plan

Instructions for Contractors & Service Providers:

Contractors and Service Providers must complete Sections 2 and 3. **Submit the completed, signed (electronic signature box checked and dated) form to the Recipient's Minority Business Officer (MBO) no later than the date of contract execution.** Incomplete forms will be found deficient. If more than 10 subcontractors are used, additional pages for Section 3 can be found on EFC's website.

If the prime contract is being performed by the parties to a Joint Venture, Teaming Agreement, or Mentor-Protégé Agreement that includes a certified MWBE, please contact EFC for assistance.

MWBE firms must be certified by the NYS Empire State Development Corporation (ESD) in order to be counted towards satisfaction of MWBE participation goals. The utilization of certified MWBEs for non-commercially useful functions may not be counted towards utilization of certified MWBEs in the Utilization Plan. Please note whether a firm is serving as a broker or supplier on the contract. A broker is denoted by NAICS code 425120 and is designated as a broker in ESD's MWBE Directory. A supplier is denoted by a NAICS code beginning with 423 or 424, or a NIGP code that does not begin with the number 9 and is designated as a supplier in ESD's MWBE Directory. If a firm is serving as a broker, please additionally provide the percentage of the broker's commission on the contract.

See the Mandatory Terms and Conditions or consult your designated MBO for further guidance.

Instructions for Minority Business Officers (MBO):

The MBO must complete Section 1. Email the completed, signed (electronic signature box checked and dated) form to your EFC Program Compliance Specialist.

The subject heading of the email to the EFC Program Compliance Specialist should follow the format "UP, Project Number, Contractor." EFC will review the Utilization Plan and email the MBO an acceptance or denial.

NYS Environmental Facilities Corporation
Minority- & Women- Owned Business Enterprise (MWBE) Utilization Plan

SECTION 1: MUNICIPAL INFORMATION				
Recipient/Municipality:			**County:**	
Project No.:	**GIGP No.:**	**Contract ID:**	**Registration No. (NYC only):**	
Minority Business Officer:		**Email:**	**Phone #:**	
Address of MBO:				
Electronic Signature of MBO: ☐ I certify that the information submitted herein is true, accurate and complete to the best of my knowledge and belief.				**Date:**

SECTION 2: PRIME CONTRACTOR / SERVICE PROVIDER INFORMATION				
Firm Name:			**Contract Type:** ☐ Construction ☐ Other Services	
Prime Firm is Certified as: ☐ MBE ☐ WBE ☐ N/A ☐ Other: If certified, please include Prime information in Section 3. If dual certified, you must select either MBE or WBE.				
Address:		**Phone #:**	**Fed. Employer ID #:**	
Description of Work:		**Email:**		
Award Date:	**Start Date:**	**Completion Date:**	**MWBE GOAL Total**	**PROPOSED MWBE Participation**
Total Contract Amount: $ **MWBE Eligible Contract Amount:** $ (MWBE Goals are applied to this amount and includes all change orders, amendments, & specialty waivers)			**Total:** % $	**Total:** % $

NYS Environmental Facilities Corporation
Minority- & Women- Owned Business Enterprise (MWBE) Utilization Plan

SECTION 3: MWBE SUBCONTRACTOR INFORMATION			
This Submittal is:	☐ The First/Original Utilization Plan ☐ Revised Utilization Plan #:		
NYS Certified M/WBE Subcontractor Info		**Contract Amount:**	**For EFC Use:**
Business Name:	**Fed. Employer ID#:**		
Address:	**Phone #:**		
Scope of Work:	**Email:**		
Select Only One: ☐ MBE ☐ WBE ☐ Other:	**Start Date:**		
Select Only One: ☐ Broker %___ ☐ Supplier ☐ N/A	**Completion Date:**		
Full Contract Amount: $			
Business Name:	**Fed. Employer ID#:**		
Address:	**Phone #:**		
Scope of Work:	**Email:**		
Select Only One: ☐ MBE ☐ WBE ☐ Other:	**Start Date:**		
Select Only One: ☐ Broker % ___ ☐ Supplier ☐ N/A	**Completion Date:**		
Full Contract Amount: $			
Business Name:	**Fed. Employer ID#:**		
Address:	**Phone #:**		
Scope of Work:	**Email:**		
Select Only One: ☐ MBE ☐ WBE ☐ Other:	**Start Date:**		
Select Only One: ☐ Broker % ___ ☐ Supplier ☐ N/A	**Completion Date:**		
Full Contract Amount: $			
Business Name:	**Fed. Employer ID#:**		
Address:	**Phone #:**		
Scope of Work:	**Email:**		
Select Only One: ☐ MBE ☐ WBE ☐ Other:	**Start Date:**		
Select Only One: ☐ Broker % ___ ☐ Supplier ☐ N/A	**Completion Date:**		
Full Contract Amount: $			

NYS Environmental Facilities Corporation
Minority- & Women- Owned Business Enterprise (MWBE) Utilization Plan

SECTION 3: M/WBE SUBCONTRACTOR INFORMATION continued			
Business Name:	**Fed. Employer ID#:**		
Address:	**Phone #:**		
Scope of Work:	**Email:**		
Select Only One: ☐ MBE ☐ WBE ☐ Other:	**Start Date:**		
Select Only One: ☐ Broker % ___ ☐ Supplier ☐ N/A	**Completion Date:**		
Full Contract Amount: $			
Business Name:	**Fed. Employer ID#:**		
Address:	**Phone #:**		
Scope of Work:	**Email:**		
Select Only One: ☐ MBE ☐ WBE ☐ Other:	**Start Date:**		
Select Only One: ☐ Broker % ___ ☐ Supplier ☐ N/A	**Completion Date:**		
Full Contract Amount: $			
Business Name:	**Fed. Employer ID#:**		
Address:	**Phone #:**		
Scope of Work:	**Email:**		
Select Only One: ☐ MBE ☐ WBE ☐ Other:	**Start Date:**		
Select Only One: ☐ Broker % ___ ☐ Supplier ☐ N/A	**Completion Date:**		
Full Contract Amount: $			
Business Name:	**Fed. Employer ID#:**		
Address:	**Phone #:**		
Scope of Work:	**Email:**		
Select Only One: ☐ MBE ☐ WBE ☐ Other:	**Start Date:**		
Select Only One: ☐ Broker % ___ ☐ Supplier ☐ N/A	**Completion Date:**		
Full Contract Amount: $			

SIGNATURE	
Electronic Signature of Contractor: ☐ I certify that the information submitted herein is true, accurate and complete to the best of my knowledge and that all MWBE subcontractors will perform a commercially useful function. **Name** (Please Type)**:**	**Date:**

Attachment 3 – EFC SDVOB Utilization Plan

NYS Environmental Facilities Corporation
Service-Disabled Veteran-Owned Business (SDVOB) Utilization Plan

Instructions for Contractors & Service Providers:

Contractors and Service Providers must complete Sections 2 and 3. **Submit the completed, signed (electronic signature box checked and dated) form in Microsoft Word format to the Recipient's designated Minority Business Officer (MBO) no later than the date of contract execution.** Incomplete forms will be found deficient. If more than 10 subcontractors are used, additional pages for Section 3 can be found on EFC's website.

If the prime contract is being performed by the parties to a Joint Venture, Teaming Agreement, or Mentor-Protégé Agreement that includes a certified SDVOB, please contact EFC for assistance.

The utilization of certified SDVOBs for non-commercially useful functions may not be counted towards utilization of certified SDVOBs in the Utilization Plan. SDVOB firms must be certified by NYS Office of General Services in order to be counted towards satisfaction of SDVOB participation goals.

See the SFA Mandatory Terms and Conditions or consult your designated MBO for further guidance.

Instructions for Minority Business Officers (MBO):

The MBO must complete Section 1. **Email the completed, signed (electronic signature box checked and dated) form in Microsoft Word format to your EFC Program Compliance Specialist.**

The subject heading of the e-mail to the EFC Program Compliance Specialist should follow the format "UP, Project Number, Contractor." EFC will review the Utilization Plan and email the MBO an acceptance or denial.

NYS Environmental Facilities Corporation
Service-Disabled Veteran-Owned Business (SDVOB) Utilization Plan

SECTION 1: MUNICIPAL INFORMATION			
Recipient/Municipality:		**County:**	
Project No.:	**GIGP No.:**	**Contract ID:**	**Registration No. (NYC only):**
Minority Business Officer:		**Email:**	**Phone #:**
Address of MBO:			
Electronic Signature of MBO: ☐ I certify that the information submitted herein is true, accurate and complete to the best of my knowledge and belief.			**Date:**

SECTION 2: PRIME CONTRACTOR / SERVICE PROVIDER INFORMATION				
Firm Name:			**Contract Type:** ☐ Construction ☐ Other Services	
Prime Firm is Certified as: ☐ SDVOB If certified, please include Prime information in Section 3.				
Address:		**Phone #:**	**Fed. Employer ID #:**	
Description of Work:		**Email:**		
Award Date:	**Start Date:**	**Completion Date:**	**SDVOB GOAL Total**	**PROPOSED SDVOB Participation**
Total Contract Amount: $ **SDVOB Eligible Contract Amount:** $ (Goals are applied to this amount and includes all change orders, amendments, & waivers)			**Total: 6**% $	**Total:** % $

NYS Environmental Facilities Corporation
Service-Disabled Veteran-Owned Business (SDVOB) Utilization Plan

SECTION 3: SDVOB SUBCONTRACTOR INFORMATION			
This Submittal is:	☐ The First/Original Utilization Plan ☐ Revised Utilization Plan #:		
NYS Certified SDVOB Subcontractor Info		**Participation: SDVOB ($)**	**For EFC Use:**
Name:	**Fed. Employer ID#:**		
Address:	**DSDVBD Control #:**		
Scope of Work:	**Phone #:**		
Full Subcontract Amount: $	**Email:**		
Start Date:	**Completion Date:**		
Name:	**Fed. Employer ID#:**		
Address:	**DSDVBD Control #:**		
Scope of Work:	**Phone #:**		
Full Subcontract Amount: $	**Email:**		
Start Date:	**Completion Date:**		
Name:	**Fed. Employer ID#:**		
Address:	**DSDVBD Control #:**		
Scope of Work:	**Phone #:**		
Full Subcontract Amount: $	**Email:**		
Start Date:	**Completion Date:**		
Name:	**Fed. Employer ID#:**		
Address:	**DSDVBD Control #:**		
Scope of Work:	**Phone #:**		
Full Subcontract Amount: $	**Email:**		
Start Date:	**Completion Date:**		
Name:	**Fed. Employer ID#:**		
Address:	**DSDVBD Control #:**		
Scope of Work:	**Phone #:**		
Full Subcontract Amount: $	**Email:**		
Start Date:	**Completion Date:**		

NYS Environmental Facilities Corporation
Service-Disabled Veteran-Owned Business (SDVOB) Utilization Plan

SECTION 3: SDVOB SUBCONTRACTOR INFORMATION continued			
Name:	**Fed. Employer ID#:**		
Address:	**DSDVBD Control #:**		
Scope of Work:	**Phone #:**		
Full Subcontract Amount: $	**Email:**		
Start Date:	**Completion Date:**		
Name:	**Fed. Employer ID#:**		
Address:	**DSDVBD Control #:**		
Scope of Work:	**Phone #:**		
Full Subcontract Amount: $	**Email:**		
Start Date:	**Completion Date:**		
Name:	**Fed. Employer ID#:**		
Address:	**DSDVBD Control #:**		
Scope of Work:	**Phone #:**		
Full Subcontract Amount: $	**Email:**		
Start Date:	**Completion Date:**		
Name:	**Fed. Employer ID#:**		
Address:	**DSDVBD Control #:**		
Scope of Work:	**Phone #:**		
Full Subcontract Amount: $	**Email:**		
Start Date:	**Completion Date:**		

SIGNATURE	
Electronic Signature of Contractor: ☐ I certify that the information submitted herein is true, accurate and complete to the best of my knowledge and that all SDVOB subcontractors will perform a commercially useful function. **Name** (Please Type)**:**	**Date:**

EXHIBIT B

Pre-Construction Survey Report for
Asbestos-Containing Materials (ACM)
Lead-Based Paints (LBP)
Polychlorinated Biphenyl (PCB) Prepared By QuES&T

and

Pre-Demolition/Pre-Renovation
Inspection for
Asbestos-Containing Materials (ACM) Prepared By
QuES&T

QuES&T
Quality Environmental Solutions & Technologies, Inc.

PRE-CONSTRUCTION SURVEY REPORT
FOR
ASBESTOS-CONTAINING MATERIALS (ACM)
LEAD-BASED PAINTS (LBP)
POLYCHLORINATD BIPHENYL (PCB)

Prepared for:
TOWN OF NEW WINDSOR
555 Union Avenue
New Windsor, NY 12553

at

WASTEWATER TREATMENT PLANT
145 Caesars Lane
New Windsor, NY 12553

June 25, 2024

QuES&T Project #245999

1376 Route 9, Wappingers Falls, NY 12590 Phone (845) 298-6031 Fax (845) 298-6251
NYS MWBD MBE Cert # 49952-2006 NYSUCP DBE Certified NJUCP DBE Certified www.Qualityenv.com

QuES&T

Quality Environmental Solutions & Technologies, Inc.

Town of New Windsor
555 Union Avenue
New Windsor, NY 12553

ATTN: Jessica Marina

Via E-mail: jmarina@newwindsor-ny.gov

Re: Town of New Windsor
Wastewater Treatment Plant
Pre-Construction Asbestos, Lead, & PCB
QuES&T Project #245999

Dear Ms. Marina

Attached is the Pre-Construction Inspection Report for Asbestos-containing Materials (ACM), Lead-Based Paints (LBP), and Polychlorinated Biphenyls (PCBs) identified throughout areas included within the above-referenced location(s) by **Qu**ality **E**nvironmental **S**olutions **& T**echnologies, Inc. **(QuES&T)**. The inspection included visual assessment of the location in question, and representative sampling, as required, in compliance with the requirements of all applicable federal, state, and local regulations.

The attached report summarizes the inspection protocol and inspection results for your review. **QuES&T** believes this report accurately reflects the material condition existing in the functional spaces at the time of our inspection.

Should you wish to discuss this matter further or require additional information concerning this submittal, please contact us at (845) 298-6031. **QuES&T** appreciates the opportunity to assist the Town of New Windsor in the environmental services area.

Sincerely,



Zachary Timpano
Technical Services
NYS/AHERA Inspector
Cert # 23-61PEY-SHAB
NYS Licensed Mold Assessor # MA01430
EPA Lead Risk Assessor / Inspector Cert# LBP-R/I-I252793-1

TABLE OF CONTENTS

EXECUTIVE SUMMARY **Page 1 - 2**

1.0 INTRODUCTON **Page 2**

2.0 ASBESTOS SURVEY **Page 3 - 4**

2.1 Inspection Summary

2.2 Sample Collection & Analytical Procedures

2.3 Identified Asbestos-containing Materials (ACM)

3.0 LEAD-BASED PAINT SURVEY **Page 5**

3.1 Inspection Summary

3.2 Identified Lead-based Paints (LBP)

4.0 PCB SURVEY **Page 6**

4.1 Inspection Summary

4.2 Identified PCBs

5.0 RECOMMENDATIONS **Page 7 - 8**

5.1 Asbestos

5.2 Lead

5.3 PCB

6.0 DISCLAIMERS **Page 8**

Table I **Identified Asbestos-containing Materials (ACM)** **Page 4**
Table II **Identified Lead-based Paints (LBP)** **Page 5**
Table III **Summation of Collected PCB Caulk Sample(s)** **Page 6**

Appendix A **ACM Location Drawings & Photos**
Appendix B **Asbestos Sample Results & Sample Locations**
Appendix C **Lead Based Paint Photos & XRF Analytical Data**
Appendix D **PCB Analytical Data**
Appendix E **Laboratory, Company & Personnel Licenses & Certifications**

EXECUTIVE SUMMARY

Quality **E**nvironmental **S**olutions & **T**echnologies, Inc. (**QuES&T**) was retained by the Town of New Windsor to conduct a Pre-Construction Survey for the presence of Asbestos-containing Materials (ACM), Lead-based Paints (LBP), Polychlorinated Biphenyls (PCB) in support of the Wastewater Treatment Plant Renovation Project, located at 145 Caesars Lane, New Windsor, NY 12553.

The survey included a visual inspection/assessment for suspect hazardous material(s), as detailed above, which are likely to be affected by planned demolition/renovations/construction activities. Inspection and sampling was limited to areas/materials slated for demolition/renovation/construction, as detailed in drawings, dated March 29, 2024, by MHE Engineering.

The survey was conducted by **QuES&T** personnel on May 2, 2024. Asbestos, Lead & PCB inspections and/or sampling was conducted by NYSDOL Asbestos Inspector(s) Shannon D. Talsma (AH# 23-61PEC-SHAB), and Zachary Timpano (AH# 23-61PEY-SHAB). The lead survey was conducted by EPA Lead Inspector/Risk Assessor Zachary Timpano utilizing X-Ray Fluorescence Technology (XRF).

ASBESTOS

Laboratory analysis and/or existing sampling data indicated the following materials as Asbestos-containing Materials (greater than 1% asbestos) **(Refer to Table I & Appendix A for details and locations)**

Exterior

- Cementitious Pipe

LEAD

Based on review of the data generated by the Viken Pb200e XRF Spectrum Analyzer, the following surfaces within the scope of work were identified as lead-based as defined by HUD/EPA (equal to or in excess of 1.0 milligram per square centimeter) (**Refer to Table II & Appendix B for details**):

Waste Water Treatment Plant

- Bypass Building, Steel Beam & Column, Metal – Blue
- Primary Tank #1 & #2, Outer Railing, Metal – Grey
- Trickling Filter #1 & #2, Catwalk Support, Metal – Red
- Trickling Filter #1 & #2, Filter Motor, Metal – Blue
- Trickling Filter #2, Railing, Metal - Grey

It should be noted that several components tested did in fact contain minimal lead-levels below the EPA threshold level of 1.0 mg/sq. cm for classification as Lead-Based Paint (LBP) and are considered lead-containing coatings by the OSHA Regulation, "Lead Exposure in Construction" (29 CFR 1926.62). OSHA does not recognize a minimum limit for lead concentrations in paint for the purposes of disturbance. Monitoring of workers performing demolition/cleaning/disturbance of painted surfaces shall be completed to document personnel occupational exposure. Items containing any amount of lead concentration are considered lead-containing coatings per 29 CFR 1926.62, OSHA Lead Exposure in Construction.

PCB

- Materials are considered to be hazardous if they contain greater than fifty (50) parts per million (ppm) of PCBs based on a sum of all Arocolors. Laboratory analysis indicates that the following materials are hazardous based on PCB concentrations of greater than 50 ppm.

  None Detected

1.0 INTRODUCTION:

Quality **E**nvironmental **S**olutions **& T**echnologies, Inc. **(QuES&T)** performed a Pre-Construction Survey for the presence of Asbestos-containing Materials (ACM), Lead-based Paint (LBP) and Polychlorinated Biphenyls (PCB) in conformance with the requirements of all applicable federal, state, and local regulations. The survey included a visual inspection/assessment, and representative sampling of suspect hazardous materials, as required, throughout accessible interior and exterior locations to be affected by future renovations of 145 Caesars Lane, New Windsor, NY 12553.

Certified **QuES&T** personnel, Shannon Talsma & Zachary Timpano conducted field inspection(s) on May 2, 2024. The inspection scope was established based on review of work scope drawings provided by MHE Engineering. Results and findings from previous surveys conducted by **QuES&T** were utilized in this inspection.

QuES&T established functional spaces based either on physical barriers (i.e. walls, doors, etc.) or homogeneity of material. Within each functional space identified, a visual inspection was performed using reasonable care and judgment, to identify and assess location, quantity, friability, and/or condition, as applicable, of all accessible installed building materials observed at the affected portion of the building/structure.

Limited localized demolition of building surfaces was performed, as part of this survey, to access concealed surfaces. No disassembly of installed equipment was conducted as part of this inspection. ACM, LBP and/or PCB's , concealed within structural components and equipment interiors or that is accessible only through extensive mechanical or structural demolition may not have been identified as part of this survey.

Homogenous material types were established based on appearance, color and texture. The findings presented in this report are based upon reasonably available information and observed site conditions at the time the assessment was performed. The findings and conclusions of this report are not meant to be indicative of future conditions at the site and does not warrant against conditions that were not evident from visual observations or historical information obtained from others.

2.0 ASBESTOS SURVEY:

2.1 INSPECTION SUMMARY

QuES&T performed a Pre-Construction Survey, in conformance with Title 12 NYCRR Part 56-5.1, for Town of New Windsor in support of the Construction Project at 145 Caesars Lane, New Windsor, NY 12553. The survey included a visual inspection / assessment for Presumed Asbestos-containing Materials (PACM) and suspect miscellaneous Asbestos-containing Materials (ACM) throughout accessible interior and exterior locations to be affected by future renovations, as detailed above. Results and findings from previous inspections conducted by **QuES&T** were utilized in this inspection.

Limited localized demolition of building surfaces was performed, as part of this survey, to access concealed surfaces. No disassembly of installed equipment was conducted as part of this inspection. ACM concealed within structural components and equipment interiors or that is accessible only through extensive mechanical or structural demolition may not have been identified as part of this survey. When any construction activity, such as demolition, remodeling, renovation or repair work, reveals PACM or suspect miscellaneous ACM that has not been identified, as part of this survey, all construction activities shall cease in the affected area.

The survey included both visual inspection of accessible spaces and representative sampling of suspect building materials for ACM. Samples collected were analyzed by a laboratory approved under the New York State Department of Health Environmental Laboratory Approval Program (NYSDOH ELAP). Samples were analyzed in the laboratory by Polarized Light Microscopy (PLM), Polarized Light Microscopy-NOB (PLM-NOB) and/or Quantitative Transmission Electron Microscopy (QTEM), as required. Sample collection and laboratory analysis were conducted in compliance with the requirements of Title 12 NYCRR Part 56-5.1, 29 CFR 1926.1101 and standard EPA & OSHA accepted methods. Samples consisting of multiple layers were separated and analyzed independently in the laboratory.

2.2 SAMPLE COLLECTION & ANALYTIAL PROCEDURES

Representative bulk sampling was performed on suspect building materials for laboratory analysis using PLM, PLM-NOB, and/or QTEM. The following is a summary of installed building materials sampled:

- Wall Materials – Cementitious Block, Brick, Mortar.
- Flooring Materials – Cementitious Slab.
- Roofing Materials – EPDM, ISO Foam.
- Miscellaneous Materials – Caulk, Cementitious Pipe.

Certified **QuES&T** personnel (Appendix C), Shannon D. Talsma (Cert. #AH 23-61PEC-SHAB) and Zachary Timpano (Cert. #AH 23-61PEY-SHAB) performed visual assessments throughout interior and exterior construction areas. A total of eighty-six **(86)** samples/layers of installed and accessible suspect building materials were analyzed by a laboratory approved under the NYSDOH ELAP. Thirty-two (32) samples/layers were analyzed using Polarized Light Microscopy (PLM) for friable materials; twenty-eight (28) samples/layers were analyzed using Polarized Light Microscopy (PLM-NOB) for non-friable organically bound materials; and twenty-six (26) samples/layers were analyzed by Confirmatory-QTEM following negative-determinations using PLM-NOB protocols.

2.3 IDENTIFIED ASBESTOS-CONTAINING MATERIALS (ACM)

TABLE I: IDENTIFIED ACM
Town of New Windsor
Wastewater Treatment Plant
145 Caesars Lane
New Windsor, NY 12553
(Construction Areas)
(Refer to Appendix A for details)

KEY: **ACM** = Materials containing greater than 1% of asbestos;
LF = Linear Feet; **SF** = Square Feet; **PACM** = Presumed Asbestos-containing Materials;
Friable = ACM capable of being released into air, and which can be crumbled, pulverized, powdered, crushed, or exposed by hand-pressure.

Location	Material	Approximate Quantity	Friable?	Condition
EXTERIORS				
Near Settling Tank #3, Protruding Out of the Ground	ACM Cementitious Pipe	3 LF	Yes	Good

Note: Length of the Cementitious Pipe is unknown at this time as it goes underground. Additional quantity of piping likely present below.

3.0 LEAD SURVEY:

3.1 INSPECTION SUMMARY

QuES&T conducted a Limited Pre-Construction Lead Survey, utilizing X-Ray Fluorescence Technology (XRF), throughout specific interior and exterior areas of the Wastewater Treatment Plant, located at 145 Caesars Lane, New Windsor, NY 12553 in support of the upcoming Construction Project. The survey was limited to specific accessible, representative building components & immovable objects, potentially affected by scheduled renovation/construction activities.

EPA Lead Inspector/Risk Assessor Zachary Timpano (Cert.# LBP-R/I-I252793-1) of **QuES&T**, collected a total of one hundred twenty four **(124)** samples (including calibrations) on May 2, 2024.

3.2 IDENTIFIED LEAD-BASED PAINT(S) (LBP)

Based on review of the data generated by the Viken Pb200e XRF Spectrum Analyzer, the following surfaces tested were identified as lead-based as defined by HUD/EPA (equal to or in excess of 1.0 milligram per square centimeter):

TABLE II: IDENTIFIED LEAD-BASED PAINT
Town of New Windsor
Wastewater Treatment Plant
145 Caesars Lane
New Windsor, NY 12553
(Construction Areas)
(Refer to Appendix B for details)

Location	LBP Component	Substrate	Color	LBP Condition	Approximate Quantity
Bypass Building	Steel Beams/Columns	Metal	Blue	Poor	70 SF
Primary Tank #1, Primary Tank #3, & Trickling Filter #2	Outer Railing	Metal	Grey	Poor	120 LF
Trickling Filter #1 & Trickling Filter #2	Catwalk Supports	Metal	Red	Poor	160 SF
Trickling Filter #1 & Trickling Filter #2	Filter Motor	Metal	Blue	Poor	24 SF

NOTE: Locations and quantities of identified LBP's are limited to areas potentially affected by future renovation activities. Surfaces/components with LBP's may exist in other spaces not included in this scope of work.

It should be noted that several components tested did in fact contain minimal lead-levels below the EPA threshold level of 1.0 mg/sq. cm for classification as Lead-Based Paint (LBP) and are considered lead-containing coatings by the OSHA Regulation, "Lead Exposure in Construction" (29 CFR 1926.62). OSHA does not recognize a minimum limit for lead concentrations in paint for the purposes of disturbance. Monitoring of workers performing demolition/cleaning/disturbance of painted surfaces shall be completed to document personnel occupational exposure. Items containing any amount of lead concentration are considered lead-containing coatings per 29 CFR 1926.62, OSHA Lead Exposure in Construction.

4.0 POLYCHLORINATED BIPHENYL (PCB) SURVEY:

4.1 INSPECTION SUMMARY

QuES&T conducted a Limited Pre-Construction Survey for the presence of PCBs in support of the NYSDOH Construction Project for the Town of New Windsor Waste Water Treatment Plant located at 145 Caesars Lane, New Windsor, NY 12553. Sampling was limited to representative, homogenous, exterior caulks potentially affected by renovations as detailed in work scope drawings provided by MHE Engineering dated March 29, 2024.

Mr. Shannon D. Talsma & Mr. Zachary Timpano of **QuES&T**, collected a total of four **(4)** bulk samples on May 2, 2024, consisting of four (4) exterior caulk samples. Bulk samples were properly packaged and forwarded to York Analytical Laboratories, Inc., in Stratford, CT for analysis using method SW846-8082A. Copies of the analytical results are contained within attached appendices for review.

4.2 IDENTIFIED PCBS

A summation of samples collected, and associated results are as follows:

TABLE III: SUMMATION OF COLLECTED PCB CAULK SAMPLES
Town of New Windsor
Wastewater Treatment Plant
145 Caesars Lane
New Windsor, NY 12553
(Construction Areas)

Sample #	Location/Description	Material Matrix	Color	Substrate	Applicable Regulatory Standards (Most Stringent)	Classification Result Upon Lab analysis
5999-PCB-01	Bypass Building, Exterior, Door, Frame, Metal to Brick and Mortar	Caulk	Gray	Metal/Brick	USEPA 40 CFR 761	**Not Detected** at The Reporting Limit (RL) or above.
5999-PCB-02	Bypass Building, Exterior, Window, Frame, Metal to Brick and Mortar	Caulk	Black	Metal/Brick	USEPA 40 CFR 761	**Not Detected** at The Reporting Limit (RL) or above.
5999-PCB-03	Grit Building, Exterior, Door, Frame, Metal to Cementitious Block and Mortar	Caulk	Gray	Metal/CMU	USEPA 40 CFR 761	**Not Detected** at The Reporting Limit (RL) or above.
5999-PCB-04	Grit Building, Exterior, Window, Frame, Metal to Cementitious Block and Mortar	Caulk	Brown	Metal/CMU	USEPA 40 CFR 761	**Not Detected** at The Reporting Limit (RL) or above.

5.0 RECOMMENDATIONS:

5.1 ASBESTOS

All construction personnel as well as individuals who have access to locations where asbestos containing materials (ACM) exists should be informed of its presence and the proper work practices in these areas. Conspicuous labeling of all ACM is suggested to ensure personnel is adequately informed. Personnel should be informed not to rest, lean or store material or equipment on or near these surfaces and not to cut, saw, drill, sand or disturb ACM. All removal, disturbance, and repair of ACM should be performed in compliance with Title 12 NYCRR Part 56 by persons properly trained to handle ACM. Facility custodial and maintenance personnel should receive training commensurate with their work activities; as defined in 29 CFR 1910.1001.

As specified in Title 12 NYCRR Part 56-5.1 (h) and (i), "If the building/structure asbestos survey finds that the portion of the building/structure to be demolished, renovated, remodeled, or have repair work contains ACM, PACM, suspect miscellaneous ACM assumed to be ACM, or asbestos material, which is impacted by the work, the owner or the owner's agent shall conduct, or cause to have conducted, asbestos removal performed by a licensed asbestos abatement contractor in conformance with all standards set forth in this Part. All ACM, PACM, suspect miscellaneous ACM assumed to be ACM, or asbestos material impacted by the demolition, renovation, remodeling or repair project shall be removed as per this Part, prior to access or disturbance by other uncertified trades or personnel. No demolition, renovation, remodeling or repair work shall be commenced by any owner or the owner's agent prior to the completion of the asbestos abatement in accordance with the notification requirements of this Part…All building/structure owners and asbestos abatement contractors on a demolition, renovation, remodeling, or repair project, which includes work covered by this part, shall inform all trades on the work site about PACM, ACM, asbestos material and suspect miscellaneous ACM…Bids may be advertised and contracts awarded for demolition, remodeling, renovation, or repair work, but no work on the current intermediate portion of the project shall commence on the demolition, renovation, remodeling or repair work by any owner or agent prior to completion of all necessary asbestos abatement work for the current intermediate portion of the entire project, in conformance with all standards set forth in this Part."

Prior to conducting demolition or construction work at the building, all ACM affected/impacted by such activities shall be removed utilizing a licensed asbestos abatement contractor and NYSDOL/EPA/NYC certified personnel prior to construction/demolition activities. All work conducted should be in accordance with all legal requirements, including but not limited to U.S. Environmental Protection Agency (EPA) National Emissions Standards for Hazardous Air Pollutants (NESHAP) [40 CFR Part 61], New York State Industrial Code Rule 56 Asbestos Regulations (ICR 56) and Chapter 1 of Title 15 of the Rules of the City of New York Regulations, as applicable. Advance notification of the asbestos project to the USEPA, NYSDOL, and NYCDEP may be required.

All suspect building materials not sampled during this survey should be considered ACM until these materials are sampled and analyzed for ACM in the laboratory. Concealed ACM: In addition to the ACMs identified at the site, there is a possibility that concealed ACM may exist at the subject facility. As such, if any concealed suspect ACM is encountered during future construction related activities, the work should immediately stop. Prior to resuming the work, the suspect ACM should either be 1) Sampled by an appropriately-certified asbestos professional and submitted to an Approved NYSDOH ELAP laboratory for asbestos analysis or 2) Presumed to be ACM (PACM) and removed by a licensed asbestos abatement contractor for disposal in accordance with all applicable regulations.

5.2 LEAD

In addition to any identified Lead-based Paints (LBP), several components tested did in fact contain minimal lead-levels below the EPA threshold level of 1.0 mg/sq. cm for classification as LBP and are considered lead-containing coatings by the OSHA Regulation, "Lead Exposure in Construction" (29 CFR 1926.62). OSHA does not recognize a minimum limit for lead concentrations in paint for the purposes of disturbance. Monitoring of workers performing demolition/cleaning/disturbance of painted surfaces shall be completed to document personnel occupational exposure. Items containing any amount of lead concentration are considered lead-containing coatings per 29 CFR 1926.62, OSHA Lead Exposure in Construction.

Activities involving the disturbance of LBP in homes, child-occupied facilities, and/or pre-schools built before 1978 must follow the requirements outlined by EPA regulations (40 CFR 745).

In areas where demolition and/or renovations are to occur and lead is present, the demolition debris waste stream should be further analyzed during segregation for compliance with EPA regulations to ensure proper disposal. TCLP testing can be performed prior to waste segregation, but results may not be indicative of the actual waste streams produced during demolition.

5.3 PCB CAULK

Materials are considered to be hazardous if they contain greater than fifty (50) parts per million (ppm) PCBs based on the sum of all Aroclors. All materials containing greater than 50 ppm PCBs potentially impacted by proposed renovations should be abated in accordance with any applicable federal, state, and/or local codes, rules, and regulations.

6.0 DISCLAIMERS

The findings presented in this report are based upon reasonably available information and observed site conditions at the time the assessment was performed. Conditions may have changed since that time and the findings and conclusions of this report are not meant to be indicative of future conditions at the Site. This report does not warrant against conditions that were not evident from visual observations or historical information obtained, or conditions that could only be determined by physical sampling or other intrusive investigation techniques that are outside the proposed scope of work.

It should be noted that the information contained within this report is based solely upon site observations and the results of laboratory analysis for samples collected by **QuES&T.** These observations and results are time dependent, subject to changing site conditions and revisions to Federal, State and Local regulations. **QuES&T** warrants that these findings have been promulgated after being prepared in general accordance with generally accepted practices in the abatement industries. **QuES&T** also recognizes that inspection laboratory data is not usually sufficient to make all abatement and management decisions.

Due to the potential for concealed Asbestos-containing Materials (ACM) or other regulated materials, this report should not be construed to represent all ACM or regulated materials within the site(s). All quantities of ACM or other regulated materials identified, and all dimensions listed within this report are approximate and should be verified On-site.

This inspection report is not intended to be used as the sole basis for soliciting pricing for regulated materials abatement. An abatement plan, specification, drawing and/or Variances should be developed to identify scope, timing, phasing and remediation means & methods for any asbestos project. The Linear and/or Square Footages (LF / SF) listed within this Report are only approximates. Abatement Contractor(s) are required to visit the building(s) in order to take actual field measurements within each listed location.

QuES&T
Quality Environmental Solutions & Technologies, Inc.

Appendix A:
ACM LOCATION DRAWINGS & PICTURES

1376 Route 9, Wappingers Falls, NY 12590 Phone (845) 298-6031 Fax (845) 298-6251
NYS MWBD MBE Cert # 49952-2006 NYSUCP DBE Certified NJUCP DBE Certified www.Qualityenv.com

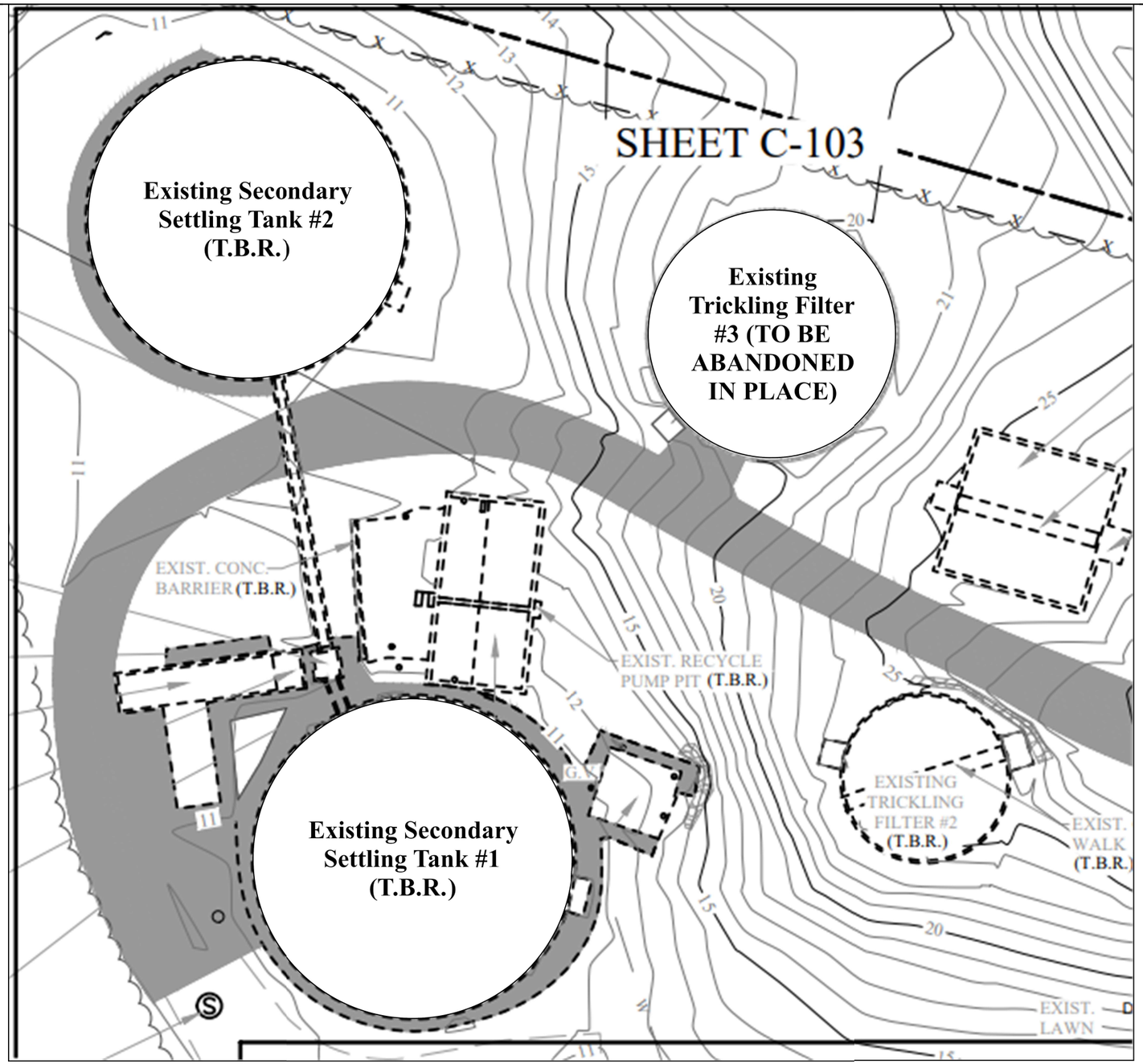

No Asbestos-containing Materials (ACM) identified uponPLM & QTEM/PLM analysis

N

Drawing Not to Scale

This Drawing is not intended to be used as the sole basis for soliciting pricing for asbestos abatement. An abatement plan, specification, drawing and/or variances should be developed to identify scope, timing, phasing and remediation means & methods for any asbestos project.

Date: 6/24/24	**Version #** 1
Issued For: Asbestos Survey	
QuES&T Project #: 24-5999	
Project Manager: RWL	**Prepared By:** ZT

QuES&T

Quality Environmental Solutions & Technologies, Inc.
1376 Route 9
Wappingers Falls, NY 12590
Phone: (845) 298- 6031
Fax: (845) 298-6251

CLIENT

TOWN OF NEW WINDSOR
555 Union Avenue
New Windsor, NY 12553

PROJECT LOCATION

Wastewater Treatment Plant
145 Caesars Lane
New Windsor, NY 12553

SITE PLAN ACM LOCATIONS

ASB-01

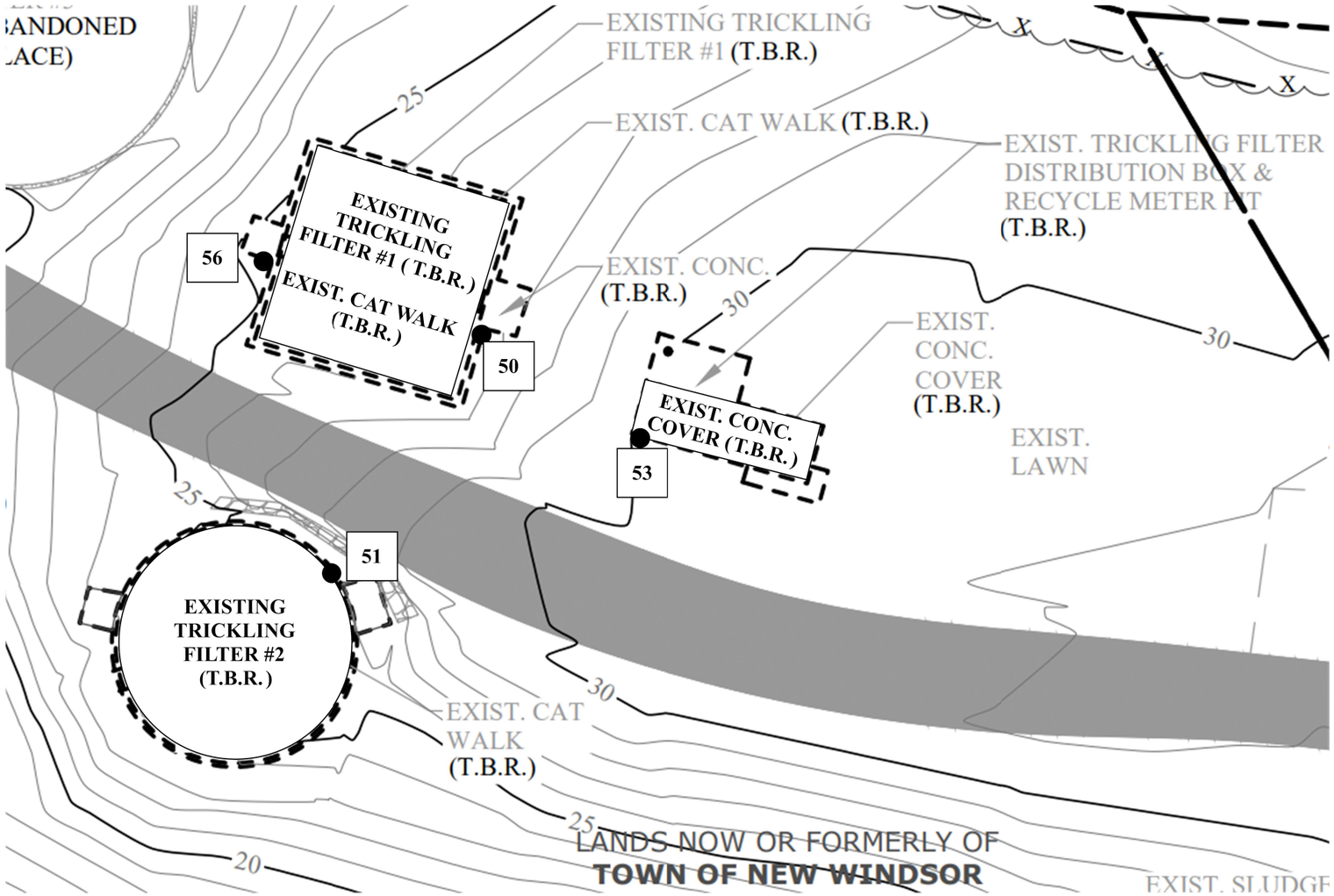

No Asbestos-containing Materials (ACM) identified uponPLM & QTEM/PLM analysis

N

Drawing Not to Scale

This Drawing is not intended to be used as the sole basis for soliciting pricing for asbestos abatement. An abatement plan, specification, drawing and/or variances should be developed to identify scope, timing, phasing and remediation means & methods for any asbestos project.

Date: 6/24/24	Version # 1
Issued For: Asbestos Survey	
QuES&T Project # : 24-5999	
Project Manager: RWL	Prepared By: ZT

QuES&T

Quality Environmental
Solutions & Technologies, Inc.
1376 Route 9
Wappingers Falls, NY 12590
Phone: (845) 298- 6031
Fax: (845) 298-6251

CLIENT

TOWN OF NEW WINDSOR
555 Union Avenue
New Windsor, NY 12553

PROJECT LOCATION

Wastewater Treatment Plant
145 Caesars Lane
New Windsor, NY 12553

SITE PLAN
ACM LOCATIONS

ASB-02

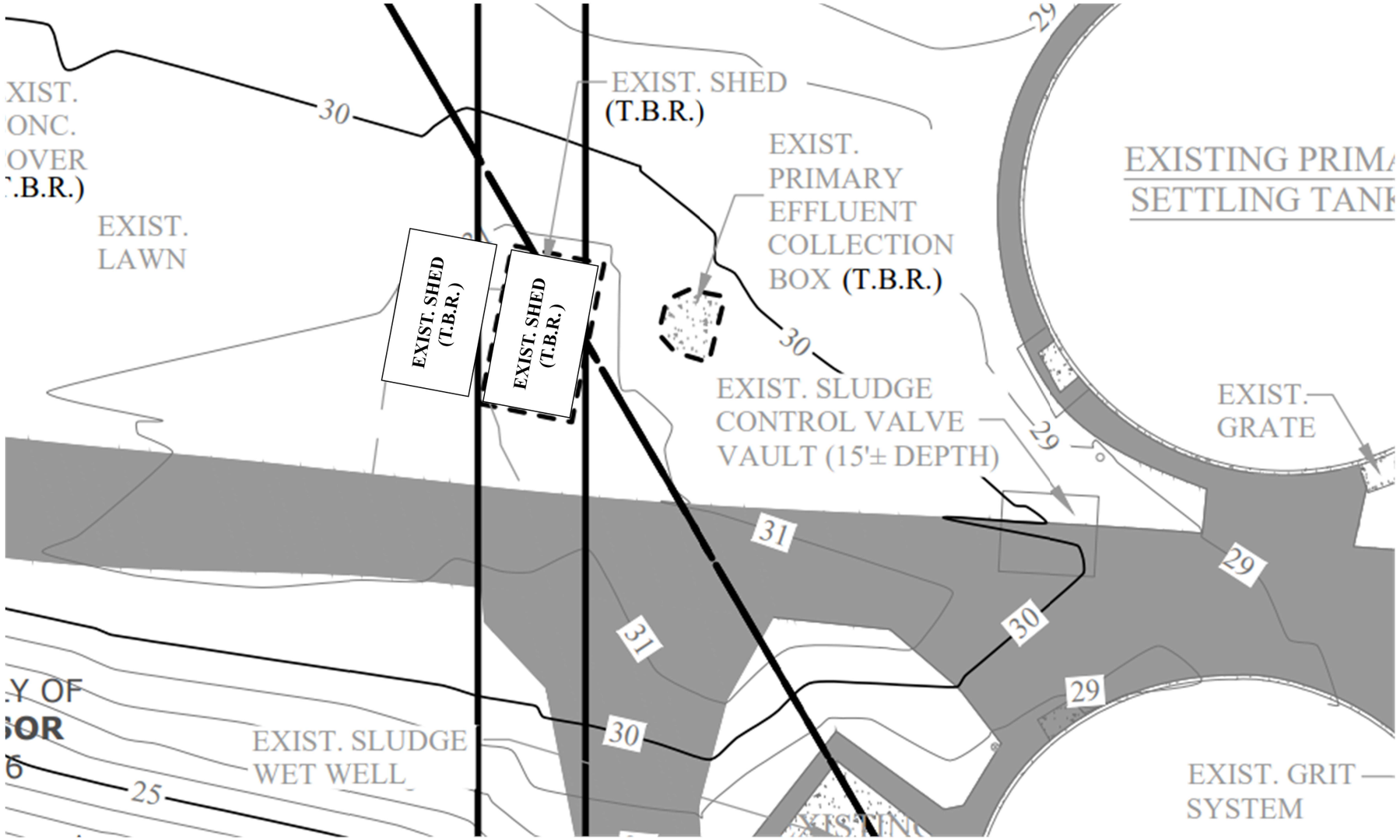

No Asbestos-containing Materials (ACM) identified uponPLM & QTEM/PLM analysis

N

Drawing Not to Scale

This Drawing is not intended to be used as the sole basis for soliciting pricing for asbestos abatement. An abatement plan, specification, drawing and/or variances should be developed to identify scope, timing, phasing and remediation means & methods for any asbestos project.

Date: 6/24/24	**Version #** 1
Issued For: Asbestos Survey	
QuES&T Project #: 24-5999	
Project Manager: RWL	**Prepared By:** JL

QuES&T

Quality Environmental
Solutions & Technologies, Inc.
1376 Route 9
Wappingers Falls, NY 12590
Phone: (845) 298- 6031
Fax: (845) 298-6251

CLIENT

TOWN OF NEW WINDSOR
555 Union Avenue
New Windsor, NY 12553

PROJECT LOCATION

Wastewater Treatment Plant
145 Caesars Lane
New Windsor, NY 12553

SITE PLAN
ACM LOCATIONS

ASB-03

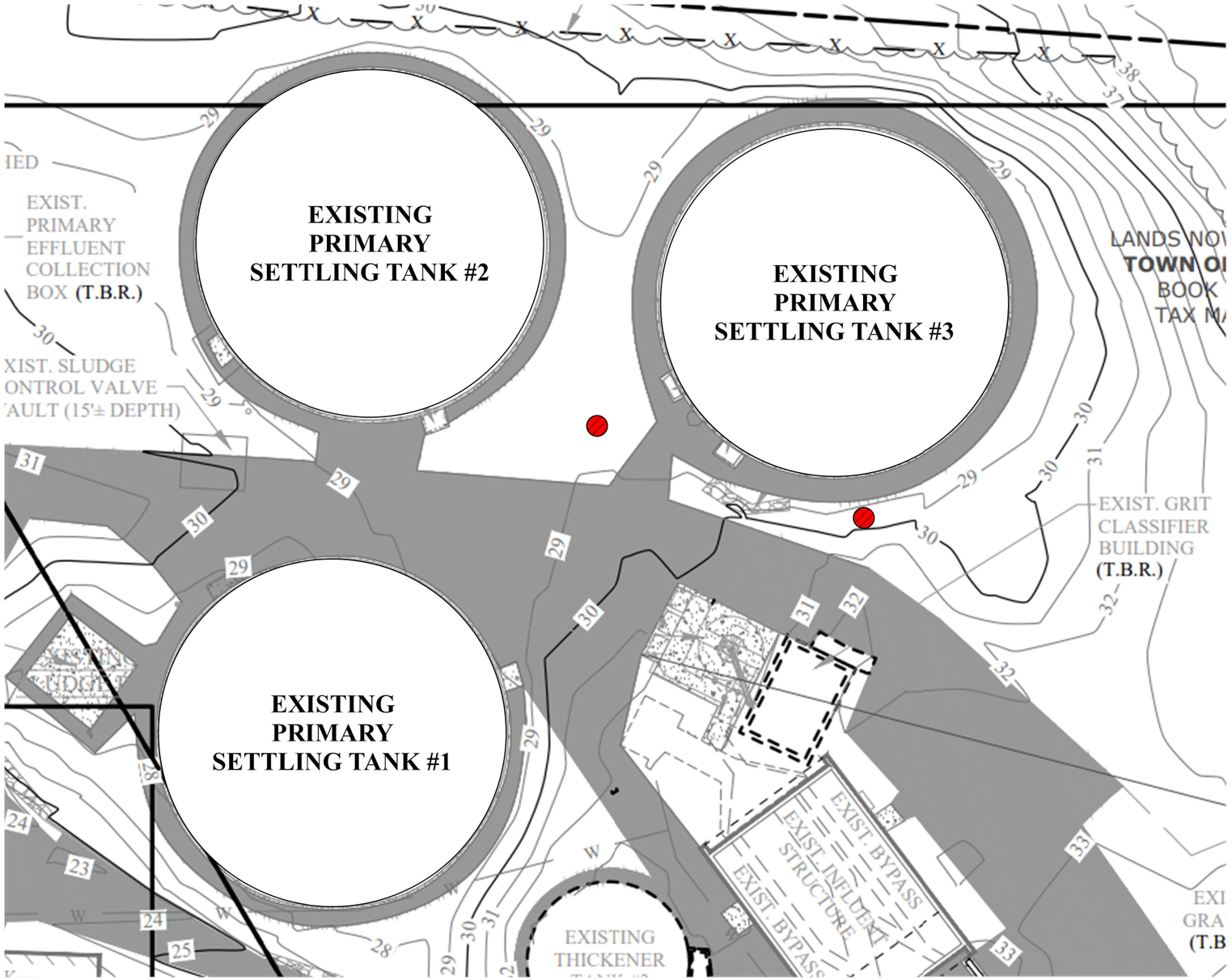

Note: The possibility of additionalcementitious pipe being buried throughout the property does exist and should it be found, it should be abated/removed in Accordance with 12NYCRR Part 56.

SAMPLE LOCATION KEY	
	ACM Cementitious Pipe

N

Drawing Not to Scale
This Drawing is not intended to be used as the sole basis for soliciting pricing for asbestos abatement. An abatement plan, specification, drawing and/or variances should be developed to identify scope, timing, phasing and remediation means & methods for any asbestos project.

Date: 6/24/24	Version # 1
Issued For: Asbestos Survey	
QuES&T Project # : 24-5999	
Project Manager: RWL	Prepared By: SDT

QuES&T

Quality Environmental
Solutions & Technologies, Inc.
1376 Route 9
Wappingers Falls, NY 12590
Phone: (845) 298- 6031
Fax: (845) 298-6251

CLIENT

TOWN OF NEW WINDSOR
555 Union Avenue
New Windsor, NY 12553

PROJECT LOCATION

Wastewater Treatment Plant
145 Caesars Lane
New Windsor, NY 12553

SITE PLAN
ACM LOCATIONS

ASB-04

Photo – ACM Cementitious Pipe.



1376 Route 9, Wappingers Falls, NY 12590 Phone (845) 298-6031 Fax (845) 298-6251
NYS MWBD MBE Cert # 49952-2006 NYSUCP DBE Certified NJUCP DBE Certified www.Qualityenv.com

QuES&T
Quality Environmental Solutions & Technologies, Inc.

Appendix B:
ASBESTOS SAMPLE RESULTS & SAMPLE LOCATIONS

Eastern Analytical Services, Inc.

Bulk Sample Results

RE: CPN 245999 - Town of New Windsor - Pre-Construction Environmental Inspection - Wastewater Treatment Plant - 145 Caesars Lane - New Windsor, NY

Client: QuES&T, Inc.
1376 Route 9
Wappingers Falls, NY 12590

Date Collected : 05/02/2024
Collected By : S. Talsma/Z. Timpano
Date Received : 05/03/2024
Date Analyzed : 05/09/2024
Analyzed By : George Htay
Signature :
Analytical Method : NYS-DOH 198.1
NVLAP Lab Code : 101646-0 (Testing)
NYS Lab No. 10851
Paul Stascavage ,Lab Director

Sample ID Number		5999-01	5999-02	5999-03	5999-04
Layer Number					
Lab ID Number		2998739	2998740	2998741	2998742
Sample Location		1st Floor, Bypass Building, Wall, Perimeter, On Cementitious Block	1st Floor, Bypass Building, Wall, Perimeter, On Cementitious Block	1st Floor, Bypass Building, Wall, Perimeter	1st Floor, Bypass Building, Wall, Perimeter
Sample Description		Mortar	Mortar	Cementitious Block	Cementitious Block
Method of Quantification		Scanning Option	Scanning Option	Scanning Option	Scanning Option
Appearance	Layered	No	No	No	No
	Homogenous	No	No	No	No
	Fibrous	No	No	No	No
	Color	Gray	Gray	Gray/White	Gray/White
Sample Treatment		Homogenized	Homogenized	Homogenized	Homogenized
Asbestos Content	% Amosite	ND	ND	ND	ND
	% Chrysotile	ND	ND	ND	ND
	% Other	ND	ND	ND	ND
	% Total Asbestos	ND	ND	ND	ND
Other Fibrous Materials Present	% Fibrous Glass	ND	ND	ND	ND
	% Cellulose	ND	ND	ND	ND
	% Other	ND	ND	ND	ND
	% Unidentified	ND	ND	ND	ND
Non-Fibrous Materials Present	% Silicates	30.0	30.0	20.0	25.0
	% Carbonates	30.0	25.0	35.0	35.0
	% Other	ND	ND	ND	ND
	% Unidentified	40.0	45.0	45.0	40.0

Results Applicable To Those Items Tested. Report Cannot be Reproduced, Except Entirely, Without Written Approval of the Laboratory. ND = Not Detected. Reporting Limit is <1%.
Liability Limited To Cost Of Analysis. This Report Must Not be Used by the Client to Claim Product Endorsement by NVLAP or Any Agency of the US Government.
These Results Can Not Be Used To Claim That NOB Items Tested Are Non-Asbestos Containing. Overall Lab Accuracy ± 17%. Samples received in acceptable condition unless otherwise noted.
AIHA LAP, LLC No. 100263 Rhode Island DOH No. AAL-072 Massachusetts DOL No. A A 000072 Connecticut DOH No. PH-0622 Maine DEP No. LA-024 Vermont DOH No. AL-709936

Eastern Analytical Services, Inc.

Bulk Sample Results

RE: CPN 245999 - Town of New Windsor - Pre-Construction Environmental Inspection - Wastewater Treatment Plant - 145 Caesars Lane - New Windsor, NY

Date Collected : 05/02/2024
Collected By : S. Talsma/Z. Timpano
Date Received : 05/03/2024
Date Analyzed : 05/09/2024
Analyzed By : George Htay
Signature :
Analytical Method : NYS-DOH 198.1
NVLAP Lab Code : 101646-0 (Testing)
NYS Lab No. 10851
Paul Stascavage ,Lab Director

Client: QuES&T, Inc.
1376 Route 9
Wappingers Falls, NY 12590

Sample ID Number		5999-05	5999-06	5999-07	5999-08
Layer Number					
Lab ID Number		2998743	2998744	2998745	2998746
Sample Location		1st Floor, Bypass Building, Floor	1st Floor, Bypass Building, Floor	Exterior, Bypass Building, Facade, On Brick	Exterior, Bypass Building, Facade, On Brick
Sample Description		Cementitious Slab	Cementitious Slab	Mortar	Mortar
Method of Quantification		Scanning Option	Scanning Option	Scanning Option	Scanning Option
Appearance	Layered	Yes	Yes	No	No
	Homogenous	No	No	No	No
	Fibrous	No	No	No	No
	Color	Gray/Yellow	Gray/Yellow	Gray	Gray
Sample Treatment		Homogenized	Homogenized	Homogenized	Homogenized
Asbestos Content	% Amosite	ND	ND	ND	ND
	% Chrysotile	ND	ND	ND	ND
	% Other	ND	ND	ND	ND
	% Total Asbestos	ND	ND	ND	ND
Other Fibrous Materials Present	% Fibrous Glass	ND	ND	ND	ND
	% Cellulose	ND	ND	ND	ND
	% Other	ND	ND	ND	ND
	% Unidentified	ND	ND	ND	ND
Non-Fibrous Materials Present	% Silicates	25.0	20.0	35.0	35.0
	% Carbonates	35.0	35.0	25.0	20.0
	% Other	ND	ND	ND	ND
	% Unidentified	40.0	45.0	40.0	45.0

Results Applicable To Those Items Tested. Report Cannot be Reproduced, Except Entirely, Without Written Approval of the Laboratory. ND = Not Detected. Reporting Limit is <1%.
Liability Limited To Cost Of Analysis. This Report Must Not be Used by the Client to Claim Product Endorsement by NVLAP or Any Agency of the US Government.
These Results Can Not Be Used To Claim That NOB Items Tested Are Non-Asbestos Containing. Overall Lab Accuracy ± 17%. Samples received in acceptable condition unless otherwise noted.
AIHA LAP, LLC No. 100263 Rhode Island DOH No. AAL-072 Massachusetts DOL No. A A 000072 Connecticut DOH No. PH-0622 Maine DEP No. LA-024 Vermont DOH No. AL-709936

Eastern Analytical Services, Inc.

Bulk Sample Results

RE: CPN 245999 - Town of New Windsor - Pre-Construction Environmental Inspection - Wastewater Treatment Plant - 145 Caesars Lane - New Windsor, NY

Client: QuES&T, Inc.
1376 Route 9
Wappingers Falls, NY 12590

Date Collected : 05/02/2024
Collected By : S. Talsma/Z. Timpano
Date Received : 05/03/2024
Date Analyzed : 05/09/2024
Analyzed By : George Htay
Signature :
Analytical Method : NYS-DOH 198.1
NVLAP Lab Code : 101646-0 (Testing)
NYS Lab No. 10851
Paul Stascavage ,Lab Director

Sample ID Number		5999-09	5999-10	5999-21	5999-22
Layer Number					
Lab ID Number		2998747	2998748	2998749	2998750
Sample Location		Exterior, Bypass Building, Facade	Exterior, Bypass Building, Facade	Interior, Grit Building, Wall, Perimeter, On Cementitious Block	Interior, Grit Building, Wall, Perimeter, On Cementitious Block
Sample Description		Brick	Brick	Mortar	Mortar
Method of Quantification		Scanning Option	Scanning Option	Scanning Option	Scanning Option
Appearance	Layered	Yes	Yes	No	No
	Homogenous	No	No	Yes	Yes
	Fibrous	No	No	No	No
	Color	Orange/Brown	Orange/Brown	Gray	Gray
Sample Treatment		Homogenized	Homogenized	None	None
Asbestos Content	% Amosite	ND	ND	ND	ND
	% Chrysotile	ND	ND	ND	ND
	% Other	ND	ND	ND	ND
	% Total Asbestos	ND	ND	ND	ND
Other Fibrous Materials Present	% Fibrous Glass	ND	ND	ND	ND
	% Cellulose	ND	ND	ND	ND
	% Other	ND	ND	ND	ND
	% Unidentified	ND	ND	ND	ND
Non-Fibrous Materials Present	% Silicates	30.0	25.0	35.0	35.0
	% Carbonates	ND	ND	25.0	20.0
	% Other	ND	ND	ND	ND
	% Unidentified	70.0	75.0	40.0	45.0

Results Applicable To Those Items Tested. Report Cannot be Reproduced, Except Entirely, Without Written Approval of the Laboratory. ND = Not Detected. Reporting Limit is <1%.
Liability Limited To Cost Of Analysis. This Report Must Not be Used by the Client to Claim Product Endorsement by NVLAP or Any Agency of the US Government.
These Results Can Not Be Used To Claim That NOB Items Tested Are Non-Asbestos Containing. Overall Lab Accuracy ± 17%. Samples received in acceptable condition unless otherwise noted.
AIHA LAP, LLC No. 100263 Rhode Island DOH No. AAL-072 Massachusetts DOL No. A A 000072 Connecticut DOH No. PH-0622 Maine DEP No. LA-024 Vermont DOH No. AL-709936

Eastern Analytical Services, Inc.

Bulk Sample Results

RE: CPN 245999 - Town of New Windsor - Pre-Construction Environmental Inspection - Wastewater Treatment Plant - 145 Caesars Lane - New Windsor, NY

Date Collected : 05/02/2024
Collected By : S. Talsma/Z. Timpano
Date Received : 05/03/2024
Date Analyzed : 05/09/2024
Analyzed By : George Htay
Signature :
Analytical Method : NYS-DOH 198.1
NVLAP Lab Code : 101646-0 (Testing)
NYS Lab No. 10851
Paul Stascavage ,Lab Director

Client: QuES&T, Inc.
1376 Route 9
Wappingers Falls, NY 12590

Sample ID Number		5999-23	5999-24	5999-25	5999-26
Layer Number					
Lab ID Number		2998751	2998752	2998753	2998754
Sample Location		Interior, Grit Building, Wall, Perimeter	Interior, Grit Building, Wall, Perimeter	Interior, Grit Building, Floor	Interior, Grit Building, Floor
Sample Description		Cementitious Block	Cementitious Block	Cementitious Slab	Cementitious Slab
Method of Quantification		Scanning Option	Scanning Option	Scanning Option	Scanning Option
Appearance	Layered	Yes	Yes	Yes	Yes
	Homogenous	No	No	No	No
	Fibrous	No	No	No	No
	Color	Gray	Gray	Gray/Brown	Gray/Brown
Sample Treatment		Homogenized	Homogenized	Homogenized	Homogenized
Asbestos Content	% Amosite	ND	ND	ND	ND
	% Chrysotile	ND	ND	ND	ND
	% Other	ND	ND	ND	ND
	% Total Asbestos	ND	ND	ND	ND
Other Fibrous Materials Present	% Fibrous Glass	ND	ND	ND	ND
	% Cellulose	ND	ND	ND	ND
	% Other	ND	ND	ND	ND
	% Unidentified	ND	ND	ND	ND
Non-Fibrous Materials Present	% Silicates	30.0	30.0	30.0	30.0
	% Carbonates	30.0	35.0	35.0	30.0
	% Other	ND	ND	ND	ND
	% Unidentified	40.0	35.0	35.0	40.0

Results Applicable To Those Items Tested. Report Cannot be Reproduced, Except Entirely, Without Written Approval of the Laboratory. ND = Not Detected. Reporting Limit is <1%.
Liability Limited To Cost Of Analysis. This Report Must Not be Used by the Client to Claim Product Endorsement by NVLAP or Any Agency of the US Government.
These Results Can Not Be Used To Claim That NOB Items Tested Are Non-Asbestos Containing. Overall Lab Accuracy ± 17%. Samples received in acceptable condition unless otherwise noted.
AIHA LAP, LLC No. 100263 Rhode Island DOH No. AAL-072 Massachusetts DOL No. A A 000072 Connecticut DOH No. PH-0622 Maine DEP No. LA-024 Vermont DOH No. AL-709936

Eastern Analytical Services, Inc.

Bulk Sample Results

RE: CPN 245999 - Town of New Windsor - Pre-Construction Environmental Inspection - Wastewater Treatment Plant - 145 Caesars Lane - New Windsor, NY

Date Collected : 05/02/2024
Collected By : S. Talsma/Z. Timpano
Date Received : 05/03/2024
Date Analyzed : 05/09/2024
Analyzed By : George Htay
Signature :
Analytical Method : NYS-DOH 198.1
NVLAP Lab Code : 101646-0 (Testing)
NYS Lab No. 10851
Paul Stascavage ,Lab Director

Client: QuES&T, Inc.
1376 Route 9
Wappingers Falls, NY 12590

Sample ID Number		5999-27	5999-28	5999-29	5999-30
Layer Number					
Lab ID Number		2998755	2998756	2998757	2998758
Sample Location		Exterior, Grit Building, Facade, On Cementitious Block	Exterior, Grit Building, Facade, On Cementitious Block	Exterior, Grit Building, Facade	Exterior, Grit Building, Facade
Sample Description		Mortar	Mortar	Cementitious Block	Cementitious Block
Method of Quantification		Scanning Option	Scanning Option	Scanning Option	Scanning Option
Appearance	Layered	No	No	No	No
	Homogenous	Yes	Yes	No	No
	Fibrous	No	No	No	No
	Color	Brown	Brown	Brown/Gray	Brown/Gray
Sample Treatment		None	None	Homogenized	Homogenized
Asbestos Content	% Amosite	ND	ND	ND	ND
	% Chrysotile	ND	ND	ND	ND
	% Other	ND	ND	ND	ND
	% Total Asbestos	ND	ND	ND	ND
Other Fibrous Materials Present	% Fibrous Glass	ND	ND	ND	ND
	% Cellulose	ND	ND	ND	ND
	% Other	ND	ND	ND	ND
	% Unidentified	ND	ND	ND	ND
Non-Fibrous Materials Present	% Silicates	40.0	35.0	30.0	25.0
	% Carbonates	20.0	25.0	30.0	30.0
	% Other	ND	ND	ND	ND
	% Unidentified	40.0	40.0	40.0	45.0

Results Applicable To Those Items Tested. Report Cannot be Reproduced, Except Entirely, Without Written Approval of the Laboratory. ND = Not Detected. Reporting Limit is <1%.
Liability Limited To Cost Of Analysis. This Report Must Not be Used by the Client to Claim Product Endorsement by NVLAP or Any Agency of the US Government.
These Results Can Not Be Used To Claim That NOB Items Tested Are Non-Asbestos Containing. Overall Lab Accuracy ± 17%. Samples received in acceptable condition unless otherwise noted.
AIHA LAP, LLC No. 100263 Rhode Island DOH No. AAL-072 Massachusetts DOL No. A A 000072 Connecticut DOH No. PH-0622 Maine DEP No. LA-024 Vermont DOH No. AL-709936

Eastern Analytical Services, Inc.

Bulk Sample Results

RE: CPN 245999 - Town of New Windsor - Pre-Construction Environmental Inspection - Wastewater Treatment Plant - 145 Caesars Lane - New Windsor, NY

Date Collected : 05/02/2024
Collected By : S. Talsma/Z. Timpano
Date Received : 05/03/2024
Date Analyzed : 05/09/2024
Analyzed By : George Htay
Signature :
Analytical Method : NYS-DOH 198.1
NVLAP Lab Code : 101646-0 (Testing)
NYS Lab No. 10851
Paul Stascavage ,Lab Director

Client: QuES&T, Inc.
1376 Route 9
Wappingers Falls, NY 12590

Sample ID Number		5999-35	5999-36	5999-43	5999-44
Layer Number					
Lab ID Number		2998759	2998760	2998761	2998762
Sample Location		Exterior, Grit Building, Roof, Field	Exterior, Grit Building, Roof, Field	Exterior, Primary Settling Tank #2, Pipe	Exterior, Primary Settling Tank #3, Pipe
Sample Description		Cementitious Deck	Cementitious Deck	Cementitious Pipe	Cementitious Pipe
Method of Quantification		Scanning Option	Scanning Option	Point Count	Point Count
Appearance	Layered	No	No	Yes	Yes
	Homogenous	No	No	No	No
	Fibrous	No	No	Yes	Yes
	Color	Gray	Gray	Gray/Blue	Gray/Green
Sample Treatment		Homogenized	Homogenized	Homogenized	Homogenized
Asbestos Content	% Amosite	ND	ND	ND	ND
	% Chrysotile	ND	ND	25.0	28.6
	% Other	ND	ND	ND	ND
	% Total Asbestos	ND	ND	25.0	28.6
Other Fibrous Materials Present	% Fibrous Glass	ND	ND	ND	ND
	% Cellulose	ND	ND	ND	ND
	% Other	ND	ND	ND	ND
	% Unidentified	ND	ND	ND	ND
Non-Fibrous Materials Present	% Silicates	15.0	10.0	ND	ND
	% Carbonates	35.0	40.0	ND	ND
	% Other	ND	ND	ND	ND
	% Unidentified	50.0	50.0	75.0	71.4

Results Applicable To Those Items Tested. Report Cannot be Reproduced, Except Entirely, Without Written Approval of the Laboratory. ND = Not Detected. Reporting Limit is <1%.
Liability Limited To Cost Of Analysis. This Report Must Not be Used by the Client to Claim Product Endorsement by NVLAP or Any Agency of the US Government.
These Results Can Not Be Used To Claim That NOB Items Tested Are Non-Asbestos Containing. Overall Lab Accuracy ± 17%. Samples received in acceptable condition unless otherwise noted.
AIHA LAP, LLC No. 100263 Rhode Island DOH No. AAL-072 Massachusetts DOL No. A A 000072 Connecticut DOH No. PH-0622 Maine DEP No. LA-024 Vermont DOH No. AL-709936

Eastern Analytical Services, Inc.

Bulk Sample Results

RE: CPN 245999 - Town of New Windsor - Pre-Construction Environmental Inspection - Wastewater Treatment Plant - 145 Caesars Lane - New Windsor, NY

Date Collected : 05/02/2024
Collected By : S. Talsma/Z. Timpano
Date Received : 05/03/2024
Date Analyzed : 05/09/2024
Analyzed By : George Htay
Signature :
Analytical Method : NYS-DOH 198.1
NVLAP Lab Code : 101646-0 (Testing)
NYS Lab No. 10851
Paul Stascavage ,Lab Director

Client: QuES&T, Inc.
1376 Route 9
Wappingers Falls, NY 12590

Sample ID Number		5999-45	5999-46	5999-47	5999-48
Layer Number					
Lab ID Number		2998763	2998764	2998765	2998766
Sample Location		Exterior, Primary Settling Tank #2, Wall	Exterior, Recycling Pump Pit, Wall	Exterior, Settling Tank #1, Wall	Exterior, Secondary Settling Tank #2, Wall
Sample Description		Concrete	Concrete	Concrete	Concrete
Method of Quantification		Scanning Option	Scanning Option	Scanning Option	Scanning Option
Appearance	Layered	No	Yes	Yes	Yes
	Homogenous	No	No	No	No
	Fibrous	No	No	No	No
	Color	Gray/Green	Gray/Black	Gray/Black	Gray/Black
Sample Treatment		Homogenized	Homogenized	Homogenized	Homogenized
Asbestos Content	% Amosite	ND	ND	ND	ND
	% Chrysotile	ND	ND	ND	ND
	% Other	ND	ND	ND	ND
	% Total Asbestos	ND	ND	ND	ND
Other Fibrous Materials Present	% Fibrous Glass	ND	ND	ND	ND
	% Cellulose	ND	ND	ND	ND
	% Other	ND	ND	ND	ND
	% Unidentified	ND	ND	ND	ND
Non-Fibrous Materials Present	% Silicates	30.0	30.0	30.0	30.0
	% Carbonates	25.0	30.0	20.0	20.0
	% Other	ND	ND	ND	ND
	% Unidentified	45.0	40.0	50.0	50.0

Results Applicable To Those Items Tested. Report Cannot be Reproduced, Except Entirely, Without Written Approval of the Laboratory. ND = Not Detected. Reporting Limit is <1%.
Liability Limited To Cost Of Analysis. This Report Must Not be Used by the Client to Claim Product Endorsement by NVLAP or Any Agency of the US Government.
These Results Can Not Be Used To Claim That NOB Items Tested Are Non-Asbestos Containing. Overall Lab Accuracy ± 17%. Samples received in acceptable condition unless otherwise noted.
AIHA LAP, LLC No. 100263 Rhode Island DOH No. AAL-072 Massachusetts DOL No. A A 000072 Connecticut DOH No. PH-0622 Maine DEP No. LA-024 Vermont DOH No. AL-709936

Eastern Analytical Services, Inc.

Bulk Sample Results

RE: CPN 245999 - Town of New Windsor - Pre-Construction Environmental Inspection - Wastewater Treatment Plant - 145 Caesars Lane - New Windsor, NY

Date Collected : 05/02/2024
Collected By : S. Talsma/Z. Timpano
Date Received : 05/03/2024
Date Analyzed : 05/09/2024
Analyzed By : George Htay
Signature :
Analytical Method : NYS-DOH 198.1
NVLAP Lab Code : 101646-0 (Testing)
NYS Lab No. 10851
Paul Stascavage ,Lab Director

Client: QuES&T, Inc.
1376 Route 9
Wappingers Falls, NY 12590

Sample ID Number		5999-49	5999-50	5999-51	5999-52
Layer Number					
Lab ID Number		2998767	2998768	2998769	2998770
Sample Location		Exterior, Settling Tank #3, Wall	Exterior, Trickling Filter #1, Wall	Exterior, Trickling Filter #2, Wall	Exterior, Trickling Filter #3, Wall
Sample Description		Concrete	Concrete	Concrete	Concrete
Method of Quantification		Scanning Option	Scanning Option	Scanning Option	Scanning Option
Appearance	Layered	Yes	Yes	Yes	Yes
	Homogenous	No	No	No	No
	Fibrous	No	No	No	No
	Color	White/Black	White/Black	Gray/Black	Gray/Black
Sample Treatment		Homogenized	Homogenized	Homogenized	Homogenized
Asbestos Content	% Amosite	ND	ND	ND	ND
	% Chrysotile	ND	ND	ND	ND
	% Other	ND	ND	ND	ND
	% Total Asbestos	ND	ND	ND	ND
Other Fibrous Materials Present	% Fibrous Glass	ND	ND	ND	ND
	% Cellulose	ND	ND	ND	ND
	% Other	ND	ND	ND	ND
	% Unidentified	ND	ND	ND	ND
Non-Fibrous Materials Present	% Silicates	25.0	30.0	30.0	25.0
	% Carbonates	25.0	20.0	30.0	30.0
	% Other	ND	ND	ND	ND
	% Unidentified	50.0	50.0	40.0	45.0

Results Applicable To Those Items Tested. Report Cannot be Reproduced, Except Entirely, Without Written Approval of the Laboratory. ND = Not Detected. Reporting Limit is <1%.
Liability Limited To Cost Of Analysis. This Report Must Not be Used by the Client to Claim Product Endorsement by NVLAP or Any Agency of the US Government.
These Results Can Not Be Used To Claim That NOB Items Tested Are Non-Asbestos Containing. Overall Lab Accuracy ± 17%. Samples received in acceptable condition unless otherwise noted.
AIHA LAP, LLC No. 100263 Rhode Island DOH No. AAL-072 Massachusetts DOL No. A A 000072 Connecticut DOH No. PH-0622 Maine DEP No. LA-024 Vermont DOH No. AL-709936

Eastern Analytical Services, Inc.

Bulk Sample Results

RE: CPN 245999 - Town of New Windsor - Pre-Construction Environmental Inspection - Wastewater Treatment Plant - 145 Caesars Lane - New Windsor, NY

Date Collected : 05/02/2024
Collected By : S. Talsma/Z. Timpano
Date Received : 05/03/2024
Date Analyzed : 05/07/2024
Analyzed By : George Htay
Signature :
Analytical Method : NYS-DOH 198.6
NVLAP Lab Code : 101646-0 (Testing)
NYS Lab No. 10851
Paul Stascavage ,Lab Director

Client QuES&T, Inc.
1376 Route 9
Wappingers Falls, NY 12590

Sample ID Number		5999-11	5999-12	5999-13	5999-14
Layer Number					
Lab ID Number		2998161	2998162	2998163	2998164
Sample Location		Exterior, Bypass Building, Foundation, On Concrete	Exterior, Bypass Building, Foundation, On Concrete	Exterior, Bypass Building, Roof, Field, Bottom Layer, On Metal Deck	Exterior, Bypass Building, Roof, Field, Bottom Layer, On Metal Deck
Sample Description		Waterproofing Tar	Waterproofing Tar	ISO Foam	ISO Foam
Analytical Method		NOB Plm	NOB Plm	NOB Plm	NOB Plm
Appearance	Layered	No	No	No	No
	Homogenous	Yes	Yes	Yes	Yes
	Fibrous	No	No	No	No
	Color	Black	Black	Yellow	Yellow
Asbestos Content	% Amosite	ND	ND	ND	ND
	% Chrysotile	< 0.7	< 0.7	ND	ND
	% Other	ND	ND	ND	ND
	% Total Asbestos	< 0.7 Inconclusive	< 0.7 Inconclusive	ND	ND
Other Materials Present	% Organic	23.4	25.2	98.5	98.4
	% Carbonates	4.9	6.3	1.2	1.3
	% Other Inorganic	71.7	68.5	0.3	0.3

Results Applicable To Those Items Tested. Report Cannot be Reproduced, Except Entirely, Without Written Approval of the Laboratory. Samples received in acceptable condition unless otherwise noted. ND = Not Detected. Liability Limited To Cost Of Analysis. This Report Must Not be Used by the Client to Claim Product Endorsement by NVLAP or Any Agency of the US Government.
These Results Cannot Be Used To Claim That NOB Items Tested Are Non-Asbestos Containing (Unless "% Other Inorganic", As Reported Above, Is Less Than One Percent).
This method does not remove vermiculite and may underestimate the level of asbestos present in a sample containing greater than 10% vermiculite.
AIHA LAP, LLC No. 100263 Rhode Island DOH No. AAL-072 Massachusetts DOL No. A A 000072 Connecticut DOH No. PH-0622 Maine DEP No. LA-024 Vermont DOH No. AL-709936

Eastern Analytical Services, Inc.

Bulk Sample Results

RE: CPN 245999 - Town of New Windsor - Pre-Construction Environmental Inspection - Wastewater Treatment Plant - 145 Caesars Lane - New Windsor, NY

Date Collected : 05/02/2024
Collected By : S. Talsma/Z. Timpano
Date Received : 05/03/2024
Date Analyzed : 05/07/2024
Analyzed By : George Htay
Signature :
Analytical Method : NYS-DOH 198.6
NVLAP Lab Code : 101646-0 (Testing)
NYS Lab No. 10851
Paul Stascavage ,Lab Director

Client QuES&T, Inc.
1376 Route 9
Wappingers Falls, NY 12590

Sample ID Number		5999-15	5999-16	5999-17	5999-18
Layer Number					
Lab ID Number		2998165	2998166	2998167	2998168
Sample Location		Exterior, Bypass Building, Roof, Field, Top Layer, On ISO Foam	Exterior, Bypass Building, Roof, Field, Top Layer, On ISO Foam	Exterior, Bypass Building, Double Doors, Frame, Metal to Brick and Mortar	Exterior, Bypass Building, Double Doors, Frame, Metal to Brick and Mortar
Sample Description		EPDM	EPDM	Caulk	Caulk
Analytical Method		NOB Plm	NOB Plm	NOB Plm	NOB Plm
Appearance	Layered	Yes	Yes	No	No
	Homogenous	No	No	Yes	Yes
	Fibrous	Yes	Yes	No	No
	Color	Black/Gray	Black/Gray	Gray	Gray
Asbestos Content	% Amosite	ND	ND	ND	ND
	% Chrysotile	ND	ND	ND	ND
	% Other	ND	ND	ND	ND
	% Total Asbestos	ND Inconclusive	ND Inconclusive	ND Inconclusive	ND Inconclusive
Other Materials Present	% Organic	76.2	75.5	43.4	42.2
	% Carbonates	2.2	2.2	54.7	55.9
	% Other Inorganic	21.6	22.3	1.9	1.9

Results Applicable To Those Items Tested. Report Cannot be Reproduced, Except Entirely, Without Written Approval of the Laboratory. Samples received in acceptable condition unless otherwise noted. ND = Not Detected.
Liability Limited To Cost Of Analysis. This Report Must Not be Used by the Client to Claim Product Endorsement by NVLAP or Any Agency of the US Government.
These Results Cannot Be Used To Claim That NOB Items Tested Are Non-Asbestos Containing (Unless "% Other Inorganic", As Reported Above, Is Less Than One Percent).
This method does not remove vermiculite and may underestimate the level of asbestos present in a sample containing greater than 10% vermiculite.
AIHA LAP, LLC No. 100263 Rhode Island DOH No. AAL-072 Massachusetts DOL No. A A 000072 Connecticut DOH No. PH-0622 Maine DEP No. LA-024 Vermont DOH No. AL-709936

Eastern Analytical Services, Inc.

Bulk Sample Results

RE: CPN 245999 - Town of New Windsor - Pre-Construction Environmental Inspection - Wastewater Treatment Plant - 145 Caesars Lane - New Windsor, NY

Date Collected : 05/02/2024
Collected By : S. Talsma/Z. Timpano
Date Received : 05/03/2024
Date Analyzed : 05/07/2024
Analyzed By : George Htay
Signature :
Analytical Method : NYS-DOH 198.6
NVLAP Lab Code : 101646-0 (Testing)
NYS Lab No. 10851
Paul Stascavage ,Lab Director

Client QuES&T, Inc.
1376 Route 9
Wappingers Falls, NY 12590

Sample ID Number		5999-19	5999-20	5999-31	5999-32
Layer Number					
Lab ID Number		2998169	2998170	2998171	2998172
Sample Location		Exterior, Bypass Building, Window, Frame, Metal to Brick and Mortar	Exterior, Bypass Building, Window, Frame, Metal to Brick and Mortar	Exterior, Grit Building, Foundation, On Concrete	Exterior, Grit Building, Foundation, On Concrete
Sample Description		Caulk	Caulk	Waterproofing Tar	Waterproofing Tar
Analytical Method		NOB Plm	NOB Plm	NOB Plm	NOB Plm
Appearance	Layered	No	No	No	No
	Homogenous	Yes	Yes	Yes	Yes
	Fibrous	No	No	No	No
	Color	Black	Black	Black/Gray	Black/Gray
Asbestos Content	% Amosite	ND	ND	ND	ND
	% Chrysotile	ND	ND	ND	ND
	% Other	ND	ND	ND	ND
	% Total Asbestos	ND Inconclusive	ND Inconclusive	ND Inconclusive	ND Inconclusive
Other Materials Present	% Organic	69.3	63.7	16.3	23.4
	% Carbonates	29.6	35.1	11.0	5.8
	% Other Inorganic	1.1	1.2	72.7	70.8

Results Applicable To Those Items Tested. Report Cannot be Reproduced, Except Entirely, Without Written Approval of the Laboratory. Samples received in acceptable condition unless otherwise noted. ND = Not Detected.
Liability Limited To Cost Of Analysis. This Report Must Not be Used by the Client to Claim Product Endorsement by NVLAP or Any Agency of the US Government.
These Results Cannot Be Used To Claim That NOB Items Tested Are Non-Asbestos Containing (Unless "% Other Inorganic", As Reported Above, Is Less Than One Percent).
This method does not remove vermiculite and may underestimate the level of asbestos present in a sample containing greater than 10% vermiculite.
AIHA LAP, LLC No. 100263 Rhode Island DOH No. AAL-072 Massachusetts DOL No. A A 000072 Connecticut DOH No. PH-0622 Maine DEP No. LA-024 Vermont DOH No. AL-709936

Eastern Analytical Services, Inc.

Bulk Sample Results

RE: CPN 245999 - Town of New Windsor - Pre-Construction Environmental Inspection - Wastewater Treatment Plant - 145 Caesars Lane - New Windsor, NY

Date Collected : 05/02/2024
Collected By : S. Talsma/Z. Timpano
Date Received : 05/03/2024
Date Analyzed : 05/07/2024
Analyzed By : George Htay
Signature :
Analytical Method : NYS-DOH 198.6
NVLAP Lab Code : 101646-0 (Testing)
NYS Lab No. 10851
Paul Stascavage ,Lab Director

Client QuES&T, Inc.
1376 Route 9
Wappingers Falls, NY 12590

Sample ID Number		5999-33	5999-34	5999-37	5999-38
Layer Number					
Lab ID Number		2998173	2998174	2998175	2998176
Sample Location		Exterior, Grit Building, Door, Frame, Metal to Cementitious Block and Mortar	Exterior, Grit Building, Door, Frame, Metal to Cementitious Block and Mortar	Exterior, Grit Building, Roof, Field, Top Layer, On Cementitious Deck	Exterior, Grit Building, Roof, Field, Top Layer, On Cementitious Deck
Sample Description		Caulk	Caulk	EPDM	EPDM
Analytical Method		NOB Plm	NOB Plm	NOB Plm	NOB Plm
Appearance	Layered	No	No	No	No
	Homogenous	Yes	Yes	Yes	Yes
	Fibrous	No	No	No	No
	Color	Gray	Gray	Black	Black
Asbestos Content	% Amosite	ND	ND	ND	ND
	% Chrysotile	ND	ND	ND	ND
	% Other	ND	ND	ND	ND
	% Total Asbestos	ND Inconclusive	ND Inconclusive	ND Inconclusive	ND Inconclusive
Other Materials Present	% Organic	42.7	42.7	73.8	74.2
	% Carbonates	55.0	54.2	24.6	24.3
	% Other Inorganic	2.3	3.1	1.6	1.5

Results Applicable To Those Items Tested. Report Cannot be Reproduced, Except Entirely, Without Written Approval of the Laboratory. Samples received in acceptable condition unless otherwise noted. ND = Not Detected.
Liability Limited To Cost Of Analysis. This Report Must Not be Used by the Client to Claim Product Endorsement by NVLAP or Any Agency of the US Government.
These Results Cannot Be Used To Claim That NOB Items Tested Are Non-Asbestos Containing (Unless "% Other Inorganic", As Reported Above, Is Less Than One Percent).
This method does not remove vermiculite and may underestimate the level of asbestos present in a sample containing greater than 10% vermiculite.
AIHA LAP, LLC No. 100263 Rhode Island DOH No. AAL-072 Massachusetts DOL No. A A 000072 Connecticut DOH No. PH-0622 Maine DEP No. LA-024 Vermont DOH No. AL-709936

Eastern Analytical Services, Inc.

Bulk Sample Results

RE: CPN 245999 - Town of New Windsor - Pre-Construction Environmental Inspection - Wastewater Treatment Plant - 145 Caesars Lane - New Windsor, NY

Date Collected : 05/02/2024
Collected By : S. Talsma/Z. Timpano
Date Received : 05/03/2024
Date Analyzed : 05/07/2024
Analyzed By : George Htay
Signature :
Analytical Method : NYS-DOH 198.6
NVLAP Lab Code : 101646-0 (Testing)
NYS Lab No. 10851
Paul Stascavage ,Lab Director

Client QuES&T, Inc.
1376 Route 9
Wappingers Falls, NY 12590

Sample ID Number		5999-39	5999-40	5999-41	5999-42
Layer Number					
Lab ID Number		2998177	2998178	2998179	2998180
Sample Location		Exterior, Grit Building, Window, Frame, Metal to Cementitious Block and Mortar	Exterior, Grit Building, Window, Frame, Metal to Cementitious Block and Mortar	Exterior, Grit Building, Pit, On Metal Flange	Exterior, Grit Building, Pit, On Metal Flange
Sample Description		Caulk	Caulk	Gasket	Gasket
Analytical Method		NOB Plm	NOB Plm	NOB Plm	NOB Plm
Appearance	Layered	No	No	No	No
	Homogenous	Yes	Yes	Yes	Yes
	Fibrous	No	No	No	No
	Color	Brown	Brown	Red	Red
Asbestos Content	% Amosite	ND	ND	ND	ND
	% Chrysotile	ND	ND	ND	ND
	% Other	ND	ND	ND	ND
	% Total Asbestos	ND Inconclusive	ND Inconclusive	ND Inconclusive	ND Inconclusive
Other Materials Present	% Organic	42.7	42.9	29.9	30.2
	% Carbonates	24.4	26.7	49.9	51.0
	% Other Inorganic	32.9	30.4	20.2	18.8

Results Applicable To Those Items Tested. Report Cannot be Reproduced, Except Entirely, Without Written Approval of the Laboratory. Samples received in acceptable condition unless otherwise noted. ND = Not Detected.
Liability Limited To Cost Of Analysis. This Report Must Not be Used by the Client to Claim Product Endorsement by NVLAP or Any Agency of the US Government.
These Results Cannot Be Used To Claim That NOB Items Tested Are Non-Asbestos Containing (Unless "% Other Inorganic", As Reported Above, Is Less Than One Percent).
This method does not remove vermiculite and may underestimate the level of asbestos present in a sample containing greater than 10% vermiculite.
AIHA LAP, LLC No. 100263 Rhode Island DOH No. AAL-072 Massachusetts DOL No. A A 000072 Connecticut DOH No. PH-0622 Maine DEP No. LA-024 Vermont DOH No. AL-709936

Eastern Analytical Services, Inc.

Bulk Sample Results

RE: CPN 245999 - Town of New Windsor - Pre-Construction Environmental Inspection - Wastewater Treatment Plant - 145 Caesars Lane - New Windsor, NY

Date Collected : 05/02/2024
Collected By : S. Talsma/Z. Timpano
Date Received : 05/03/2024
Date Analyzed : 05/07/2024
Analyzed By : George Htay
Signature :
Analytical Method : NYS-DOH 198.6
NVLAP Lab Code : 101646-0 (Testing)
NYS Lab No. 10851
Paul Stascavage ,Lab Director

Client QuES&T, Inc.
1376 Route 9
Wappingers Falls, NY 12590

Sample ID Number		5999-53	5999-54	5999-55	5999-56
Layer Number					
Lab ID Number		2998181	2998182	2998183	2998184
Sample Location		Exterior, Recycling Pump Pit, Wall, On Concrete	Exterior, Settling Tank #1, Wall, On Concrete	Exterior, Settling Tank #3, Wall, On Concrete	Exterior, Trickling Filter #1, Wall, On Concrete
Sample Description		Waterproofing Tar	Waterproofing Tar	Waterproofing Tar	Waterproofing Tar
Analytical Method		NOB Plm	NOB Plm	NOB Plm	NOB Plm
Appearance	Layered	Yes	Yes	Yes	Yes
	Homogenous	No	No	No	No
	Fibrous	No	No	No	No
	Color	Black/Brown	Black/Brown	Black/Brown	Black/Brown
Asbestos Content	% Amosite	ND	ND	ND	ND
	% Chrysotile	ND	ND	ND	ND
	% Other	ND	ND	ND	ND
	% Total Asbestos	ND Inconclusive	ND Inconclusive	ND Inconclusive	ND Inconclusive
Other Materials Present	% Organic	44.7	42.0	51.4	27.5
	% Carbonates	8.2	11.7	10.5	19.8
	% Other Inorganic	47.1	46.3	38.1	52.7

Results Applicable To Those Items Tested. Report Cannot be Reproduced, Except Entirely, Without Written Approval of the Laboratory. Samples received in acceptable condition unless otherwise noted. ND = Not Detected.
Liability Limited To Cost Of Analysis. This Report Must Not be Used by the Client to Claim Product Endorsement by NVLAP or Any Agency of the US Government.
These Results Cannot Be Used To Claim That NOB Items Tested Are Non-Asbestos Containing (Unless "% Other Inorganic", As Reported Above, Is Less Than One Percent).
This method does not remove vermiculite and may underestimate the level of asbestos present in a sample containing greater than 10% vermiculite.
AIHA LAP, LLC No. 100263 Rhode Island DOH No. AAL-072 Massachusetts DOL No. A A 000072 Connecticut DOH No. PH-0622 Maine DEP No. LA-024 Vermont DOH No. AL-709936

Eastern Analytical Services, Inc.

Bulk Sample Results

RE: CPN 245999 - Town of New Windsor - Pre-Construction Environmental Inspection - Wastewater Treatment Plant - 145 Caesars Lane - New Windsor, NY

Date Collected : 05/02/2024
Collected By : S. Talsma/Z. Timpano
Date Received : 05/03/2024
Date Analyzed : 05/07/2024
Analyzed By : George Htay
Signature :
Analytical Method : NYS-DOH 198.6
NVLAP Lab Code : 101646-0 (Testing)
NYS Lab No. 10851
Paul Stascavage ,Lab Director

Client QuES&T, Inc.
1376 Route 9
Wappingers Falls, NY 12590

Sample ID Number		5999-57	5999-58	5999-59	5999-60
Layer Number					
Lab ID Number		2998185	2998186	2998187	2998188
Sample Location		Exterior, Shed #1, Roof, On Wood Deck	Exterior, Shed #2, Roof, On Wood Deck	Exterior, Shed #3, Roof, On Wood Deck	Exterior, Shed #2, Roof, On Wood Deck
Sample Description		Shingle	Shingle	Shingle	Shingle
Analytical Method		NOB Plm	NOB Plm	NOB Plm	NOB Plm
Appearance	Layered	Yes	Yes	Yes	Yes
	Homogenous	No	No	No	No
	Fibrous	Yes	Yes	Yes	Yes
	Color	Black/Gray	Black/Gray	Black/Gray/Brown	Black/Gray/Brown
Asbestos Content	% Amosite	ND	ND	ND	ND
	% Chrysotile	ND	ND	ND	ND
	% Other	ND	ND	ND	ND
	% Total Asbestos	ND Inconclusive	ND Inconclusive	ND Inconclusive	ND Inconclusive
Other Materials Present	% Organic	21.6	22.4	22.2	21.8
	% Carbonates	46.1	45.9	39.6	38.5
	% Other Inorganic	32.3	31.7	38.2	39.7

Results Applicable To Those Items Tested. Report Cannot be Reproduced, Except Entirely, Without Written Approval of the Laboratory. Samples received in acceptable condition unless otherwise noted. ND = Not Detected.
Liability Limited To Cost Of Analysis. This Report Must Not be Used by the Client to Claim Product Endorsement by NVLAP or Any Agency of the US Government.
These Results Cannot Be Used To Claim That NOB Items Tested Are Non-Asbestos Containing (Unless "% Other Inorganic", As Reported Above, Is Less Than One Percent).
This method does not remove vermiculite and may underestimate the level of asbestos present in a sample containing greater than 10% vermiculite.
AIHA LAP, LLC No. 100263 Rhode Island DOH No. AAL-072 Massachusetts DOL No. A A 000072 Connecticut DOH No. PH-0622 Maine DEP No. LA-024 Vermont DOH No. AL-709936

Eastern Analytical Services, Inc.

Bulk Sample Results

RE: CPN 245999 - Town of New Windsor - Pre-Construction Environmental Inspection - Wastewater Treatment Plant - 145 Caesars Lane - New Windsor, NY

Date Collected : 05/02/2024
Collected By : S. Talsma/Z. Timpano
Date Received : 05/03/2024
Date Analyzed : 05/08/2024
Analyzed By : Fahrudin Lalic
Signature :
Analytical Method : NYS-DOH 198.4
NVLAP Lab Code : 101646-0 (Testing)
NYS Lab No. 10851
Paul Stascavage ,Lab Director

Client QuES&T, Inc.
1376 Route 9
Wappingers Falls, NY 12590

Sample ID Number		5999-11	5999-12	5999-15	5999-16
Layer Number					
Lab ID Number		2998161	2998162	2998165	2998166
Sample Location		Exterior, Bypass Building, Foundation, On Concrete	Exterior, Bypass Building, Foundation, On Concrete	Exterior, Bypass Building, Roof, Field, Top Layer, On ISO Foam	Exterior, Bypass Building, Roof, Field, Top Layer, On ISO Foam
Sample Description		Waterproofing Tar	Waterproofing Tar	EPDM	EPDM
Analytical Method		NOB Tem	NOB Tem	NOB Tem	NOB Tem
Appearance	Layered	No	No	Yes	Yes
	Homogenous	Yes	Yes	No	No
	Fibrous	No	No	Yes	Yes
	Color	Black	Black	Black/Gray	Black/Gray
Asbestos Content	% Amosite	ND	ND	ND	ND
	% Chrysotile	< 0.7	< 0.7	ND	ND
	% Other	ND	ND	ND	ND
	% Total Asbestos	< 0.7	< 0.7	ND	ND
Other Materials Present	% Organic	23.4	25.2	76.2	75.5
	% Carbonates	4.9	6.3	2.2	2.2
	% Other Inorganic	71.7	68.5	21.6	22.3

Results Applicable To Those Items Tested. Report Cannot be Reproduced, Except Entirely, Without Written Approval of the Laboratory. Samples received in acceptable condition unless otherwise noted. ND = Not Detected. Liability Limited To Cost Of Analysis. This Report Must Not be Used by the Client to Claim Product Endorsement by NVLAP or Any Agency of the US Government.
AIHA LAP, LLC No. 100263 Rhode Island DOH No. AAL-072 Massachusetts DOL No. A A 000072 Connecticut DOH No. PH-0622 Maine DEP No. LA-024 Vermont DOH No. AL-709936

Eastern Analytical Services, Inc.

Bulk Sample Results

RE: CPN 245999 - Town of New Windsor - Pre-Construction Environmental Inspection - Wastewater Treatment Plant - 145 Caesars Lane - New Windsor, NY

Date Collected : 05/02/2024
Collected By : S. Talsma/Z. Timpano
Date Received : 05/03/2024
Date Analyzed : 05/08/2024
Analyzed By : Fahrudin Lalic
Signature :
Analytical Method : NYS-DOH 198.4
NVLAP Lab Code : 101646-0 (Testing)
NYS Lab No. 10851
Paul Stascavage ,Lab Director

Client QuES&T, Inc.
1376 Route 9
Wappingers Falls, NY 12590

Sample ID Number		5999-17	5999-18	5999-19	5999-20
Layer Number					
Lab ID Number		2998167	2998168	2998169	2998170
Sample Location		Exterior, Bypass Building, Double Doors, Frame, Metal to Brick and Mortar	Exterior, Bypass Building, Double Doors, Frame, Metal to Brick and Mortar	Exterior, Bypass Building, Window, Frame, Metal to Brick and Mortar	Exterior, Bypass Building, Window, Frame, Metal to Brick and Mortar
Sample Description		Caulk	Caulk	Caulk	Caulk
Analytical Method		NOB Tem	NOB Tem	NOB Tem	NOB Tem
Appearance	Layered	No	No	No	No
	Homogenous	Yes	Yes	Yes	Yes
	Fibrous	No	No	No	No
	Color	Gray	Gray	Black	Black
Asbestos Content	% Amosite	ND	ND	ND	ND
	% Chrysotile	ND	ND	ND	ND
	% Other	ND	ND	ND	ND
	% Total Asbestos	ND	ND	ND	ND
Other Materials Present	% Organic	43.4	42.2	69.3	63.7
	% Carbonates	54.7	55.9	29.6	35.1
	% Other Inorganic	1.9	1.9	1.1	1.2

Results Applicable To Those Items Tested. Report Cannot be Reproduced, Except Entirely, Without Written Approval of the Laboratory. Samples received in acceptable condition unless otherwise noted. ND = Not Detected. Liability Limited To Cost Of Analysis. This Report Must Not be Used by the Client to Claim Product Endorsement by NVLAP or Any Agency of the US Government.
AIHA LAP, LLC No. 100263 Rhode Island DOH No. AAL-072 Massachusetts DOL No. A A 000072 Connecticut DOH No. PH-0622 Maine DEP No. LA-024 Vermont DOH No. AL-709936

Eastern Analytical Services, Inc.

Bulk Sample Results

RE: CPN 245999 - Town of New Windsor - Pre-Construction Environmental Inspection - Wastewater Treatment Plant - 145 Caesars Lane - New Windsor, NY

Date Collected : 05/02/2024
Collected By : S. Talsma/Z. Timpano
Date Received : 05/03/2024
Date Analyzed : 05/08/2024
Analyzed By : Fahrudin Lalic
Signature :
Analytical Method : NYS-DOH 198.4
NVLAP Lab Code : 101646-0 (Testing)
NYS Lab No. 10851
Paul Stascavage ,Lab Director

Client QuES&T, Inc.
1376 Route 9
Wappingers Falls, NY 12590

Sample ID Number		5999-31	5999-32	5999-33	5999-34
Layer Number					
Lab ID Number		2998171	2998172	2998173	2998174
Sample Location		Exterior, Grit Building, Foundation, On Concrete	Exterior, Grit Building, Foundation, On Concrete	Exterior, Grit Building, Door, Frame, Metal to Cementitious Block and Mortar	Exterior, Grit Building, Door, Frame, Metal to Cementitious Block and Mortar
Sample Description		Waterproofing Tar	Waterproofing Tar	Caulk	Caulk
Analytical Method		NOB Tem	NOB Tem	NOB Tem	NOB Tem
Appearance	Layered	No	No	No	No
	Homogenous	Yes	Yes	Yes	Yes
	Fibrous	No	No	No	No
	Color	Black/Gray	Black/Gray	Gray	Gray
Asbestos Content	% Amosite	ND	ND	ND	ND
	% Chrysotile	ND	ND	ND	ND
	% Other	ND	ND	ND	ND
	% Total Asbestos	ND	ND	ND	ND
Other Materials Present	% Organic	16.3	23.4	42.7	42.7
	% Carbonates	11.0	5.8	55.0	54.2
	% Other Inorganic	72.7	70.8	2.3	3.1

Results Applicable To Those Items Tested. Report Cannot be Reproduced, Except Entirely, Without Written Approval of the Laboratory. Samples received in acceptable condition unless otherwise noted. ND = Not Detected. Liability Limited To Cost Of Analysis. This Report Must Not be Used by the Client to Claim Product Endorsement by NVLAP or Any Agency of the US Government.
AIHA LAP, LLC No. 100263 Rhode Island DOH No. AAL-072 Massachusetts DOL No. A A 000072 Connecticut DOH No. PH-0622 Maine DEP No. LA-024 Vermont DOH No. AL-709936

Eastern Analytical Services, Inc.

Bulk Sample Results

RE: CPN 245999 - Town of New Windsor - Pre-Construction Environmental Inspection - Wastewater Treatment Plant - 145 Caesars Lane - New Windsor, NY

Date Collected : 05/02/2024
Collected By : S. Talsma/Z. Timpano
Date Received : 05/03/2024
Date Analyzed : 05/08/2024
Analyzed By : Fahrudin Lalic
Signature :
Analytical Method : NYS-DOH 198.4
NVLAP Lab Code : 101646-0 (Testing)
NYS Lab No. 10851
Paul Stascavage ,Lab Director

Client QuES&T, Inc.
1376 Route 9
Wappingers Falls, NY 12590

Sample ID Number		5999-37	5999-38	5999-39	5999-40
Layer Number					
Lab ID Number		2998175	2998176	2998177	2998178
Sample Location		Exterior, Grit Building, Roof, Field, Top Layer, On Cementitious Deck	Exterior, Grit Building, Roof, Field, Top Layer, On Cementitious Deck	Exterior, Grit Building, Window, Frame, Metal to Cementitious Block and Mortar	Exterior, Grit Building, Window, Frame, Metal to Cementitious Block and Mortar
Sample Description		EPDM	EPDM	Caulk	Caulk
Analytical Method		NOB Tem	NOB Tem	NOB Tem	NOB Tem
Appearance	Layered	No	No	No	No
	Homogenous	Yes	Yes	Yes	Yes
	Fibrous	No	No	No	No
	Color	Black	Black	Brown	Brown
Asbestos Content	% Amosite	ND	ND	ND	ND
	% Chrysotile	ND	ND	ND	ND
	% Other	ND	ND	ND	ND
	% Total Asbestos	ND	ND	ND	ND
Other Materials Present	% Organic	73.8	74.2	42.7	42.9
	% Carbonates	24.6	24.3	24.4	26.7
	% Other Inorganic	1.6	1.5	32.9	30.4

Results Applicable To Those Items Tested. Report Cannot be Reproduced, Except Entirely, Without Written Approval of the Laboratory. Samples received in acceptable condition unless otherwise noted. ND = Not Detected. Liability Limited To Cost Of Analysis. This Report Must Not be Used by the Client to Claim Product Endorsement by NVLAP or Any Agency of the US Government.
AIHA LAP, LLC No. 100263 Rhode Island DOH No. AAL-072 Massachusetts DOL No. A A 000072 Connecticut DOH No. PH-0622 Maine DEP No. LA-024 Vermont DOH No. AL-709936

Eastern Analytical Services, Inc.

Bulk Sample Results

RE: CPN 245999 - Town of New Windsor - Pre-Construction Environmental Inspection - Wastewater Treatment Plant - 145 Caesars Lane - New Windsor, NY

Date Collected : 05/02/2024
Collected By : S. Talsma/Z. Timpano
Date Received : 05/03/2024
Date Analyzed : 05/08/2024
Analyzed By : Fahrudin Lalic
Signature :
Analytical Method : NYS-DOH 198.4
NVLAP Lab Code : 101646-0 (Testing)
NYS Lab No. 10851
Paul Stascavage ,Lab Director

Client QuES&T, Inc.
1376 Route 9
Wappingers Falls, NY 12590

Sample ID Number		5999-41	5999-42	5999-53	5999-54
Layer Number					
Lab ID Number		2998179	2998180	2998181	2998182
Sample Location		Exterior, Grit Building, Pit, On Metal Flange	Exterior, Grit Building, Pit, On Metal Flange	Exterior, Recycling Pump Pit, Wall, On Concrete	Exterior, Settling Tank #1, Wall, On Concrete
Sample Description		Gasket	Gasket	Waterproofing Tar	Waterproofing Tar
Analytical Method		NOB Tem	NOB Tem	NOB Tem	NOB Tem
Appearance	Layered	No	No	Yes	Yes
	Homogenous	Yes	Yes	No	No
	Fibrous	No	No	No	No
	Color	Red	Red	Black/Brown	Black/Brown
Asbestos Content	% Amosite	ND	ND	ND	ND
	% Chrysotile	ND	ND	ND	ND
	% Other	ND	ND	ND	ND
	% Total Asbestos	ND	ND	ND	ND
Other Materials Present	% Organic	29.9	30.2	44.7	42.0
	% Carbonates	49.9	51.0	8.2	11.7
	% Other Inorganic	20.2	18.8	47.1	46.3

Results Applicable To Those Items Tested. Report Cannot be Reproduced, Except Entirely, Without Written Approval of the Laboratory. Samples received in acceptable condition unless otherwise noted. ND = Not Detected. Liability Limited To Cost Of Analysis. This Report Must Not be Used by the Client to Claim Product Endorsement by NVLAP or Any Agency of the US Government.
AIHA LAP, LLC No. 100263 Rhode Island DOH No. AAL-072 Massachusetts DOL No. A A 000072 Connecticut DOH No. PH-0622 Maine DEP No. LA-024 Vermont DOH No. AL-709936

Eastern Analytical Services, Inc.

Bulk Sample Results

RE: CPN 245999 - Town of New Windsor - Pre-Construction Environmental Inspection - Wastewater Treatment Plant - 145 Caesars Lane - New Windsor, NY

Date Collected : 05/02/2024
Collected By : S. Talsma/Z. Timpano
Date Received : 05/03/2024
Date Analyzed : 05/08/2024
Analyzed By : Fahrudin Lalic
Signature :
Analytical Method : NYS-DOH 198.4
NVLAP Lab Code : 101646-0 (Testing)
NYS Lab No. 10851
Paul Stascavage ,Lab Director

Client QuES&T, Inc.
1376 Route 9
Wappingers Falls, NY 12590

Sample ID Number		5999-55	5999-56	5999-57	5999-58
Layer Number					
Lab ID Number		2998183	2998184	2998185	2998186
Sample Location		Exterior, Settling Tank #3, Wall, On Concrete	Exterior, Trickling Filter #1, Wall, On Concrete	Exterior, Shed #1, Roof, On Wood Deck	Exterior, Shed #2, Roof, On Wood Deck
Sample Description		Waterproofing Tar	Waterproofing Tar	Shingle	Shingle
Analytical Method		NOB Tem	NOB Tem	NOB Tem	NOB Tem
Appearance	Layered	Yes	Yes	Yes	Yes
	Homogenous	No	No	No	No
	Fibrous	No	No	Yes	Yes
	Color	Black/Brown	Black/Brown	Black/Gray	Black/Gray
Asbestos Content	% Amosite	ND	ND	ND	ND
	% Chrysotile	ND	ND	ND	ND
	% Other	ND	ND	ND	ND
	% Total Asbestos	ND	ND	ND	ND
Other Materials Present	% Organic	51.4	27.5	21.6	22.4
	% Carbonates	10.5	19.8	46.1	45.9
	% Other Inorganic	38.1	52.7	32.3	31.7

Results Applicable To Those Items Tested. Report Cannot be Reproduced, Except Entirely, Without Written Approval of the Laboratory. Samples received in acceptable condition unless otherwise noted. ND = Not Detected. Liability Limited To Cost Of Analysis. This Report Must Not be Used by the Client to Claim Product Endorsement by NVLAP or Any Agency of the US Government.
AIHA LAP, LLC No. 100263 Rhode Island DOH No. AAL-072 Massachusetts DOL No. A A 000072 Connecticut DOH No. PH-0622 Maine DEP No. LA-024 Vermont DOH No. AL-709936

Eastern Analytical Services, Inc.

Bulk Sample Results

RE: CPN 245999 - Town of New Windsor - Pre-Construction Environmental Inspection - Wastewater Treatment Plant - 145 Caesars Lane - New Windsor, NY

Client QuES&T, Inc.
1376 Route 9
Wappingers Falls, NY 12590

Date Collected : 05/02/2024
Collected By : S. Talsma/Z. Timpano
Date Received : 05/03/2024
Date Analyzed : 05/08/2024
Analyzed By : Fahrudin Lalic
Signature :
Analytical Method : NYS-DOH 198.4
NVLAP Lab Code : 101646-0 (Testing)
NYS Lab No. 10851
Paul Stascavage ,Lab Director

Sample ID Number		5999-59	5999-60
Layer Number			
Lab ID Number		2998187	2998188
Sample Location		Exterior, Shed #3, Roof, On Wood Deck	Exterior, Shed #2, Roof, On Wood Deck
Sample Description		Shingle	Shingle
Analytical Method		NOB Tem	NOB Tem
Appearance	Layered	Yes	Yes
	Homogenous	No	No
	Fibrous	Yes	Yes
	Color	Black/Gray/Brown	Black/Gray/Brown
Asbestos Content	% Amosite	ND	ND
	% Chrysotile	ND	ND
	% Other	ND	ND
	% Total Asbestos	ND	ND
Other Materials Present	% Organic	22.2	21.8
	% Carbonates	39.6	38.5
	% Other Inorganic	38.2	39.7

Results Applicable To Those Items Tested. Report Cannot be Reproduced, Except Entirely, Without Written Approval of the Laboratory. Samples received in acceptable condition unless otherwise noted. ND = Not Detected. Liability Limited To Cost Of Analysis. This Report Must Not be Used by the Client to Claim Product Endorsement by NVLAP or Any Agency of the US Government.
AIHA LAP, LLC No. 100263 Rhode Island DOH No. AAL-072 Massachusetts DOL No. A A 000072 Connecticut DOH No. PH-0622 Maine DEP No. LA-024 Vermont DOH No. AL-709936

Quality Environmental Solutions and Technologies, Inc.
Bulk Sample Chain of Custody

CLIENT: TOWN OF NEW WINDSOR
ADDRESS: 555 Union Avenue
New Windsor, NY 12553
CONTACT: Jessica Marina

PROJECT # : 24-5999
SAMPLED BY: S. Talsma/Z. Timpano
DATE SAMPLED: 2-May-24
STATE SAMPLED IN: NY
ANALYSIS METHOD: PLM/NOB-PLM/QTEM

PROJECT NAME: Pre-Construction Environmental Inspection
PROJECT BUILDING: Wastewater Treatment Plant
PROJECT ADDRESS: 145 Caesars Lane
New Windsor, NY 12553

TURN-AROUND TIME: 5 DAYS

Sample	HM#	Floor	Space Name/ID #	Location	Material	Results
5999-01		First	Bypass Building	Wall, Perimeter, On Cementitious Block	Mortar	2998739
5999-02		First	Bypass Building	Wall, Perimeter, On Cementitious Block	Mortar	2998740
5999-03		First	Bypass Building	Wall, Perimeter	Cementitious Block	2998741
5999-04		First	Bypass Building	Wall, Perimeter	Cementitious Block	2998742
5999-05		First	Bypass Building	Floor	Cementitious Slab	2998743
5999-06		First	Bypass Building	Floor	Cementitious Slab	2998744
5999-07		Exterior	Bypass Building	Façade, On Brick	Mortar	2998745
5999-08		Exterior	Bypass Building	Façade, On Brick	Mortar	2998746
5999-09		Exterior	Bypass Building	Façade	Brick	2998747
5999-10		Exterior	Bypass Building	Façade	Brick	2998748
5999-11		Exterior	Bypass Building	Foundation, On Concrete	Waterproofing Tar	
5999-12		Exterior	Bypass Building	Foundation, On Concrete	Waterproofing Tar	
5999-13		Exterior	Bypass Building	Roof, Field, Bottom Layer, On Metal Deck	ISO Foam	
5999-14		Exterior	Bypass Building	Roof, Field, Bottom Layer, On Metal Deck	ISO Foam	
5999-15		Exterior	Bypass Building	Roof, Field, Top Layer, On ISO Foam	EPDM	

AS LABELED ON PAPERWORK
INITIAL/DATE MP, 05/08/2024

Comments:

SUBMITTED BY: [signature] DATE: 03 May 2024

RECEIVED BY: [signature] MAY 3'24 21:17 DATE:

Quality Environmental Solutions and Technologies, Inc.
Bulk Sample Chain of Custody

CLIENT: TOWN OF NEW WINDSOR
ADDRESS: 555 Union Avenue
New Windsor, NY 12553
CONTACT: Jessica Marina

PROJECT # : 24-5999
SAMPLED BY: S. Talsma/Z. Timpano
DATE SAMPLED: 2-May-24
STATE SAMPLED IN: NY
ANALYSIS METHOD: PLM/NOB-PLM/QTEM
TURN-AROUND TIME: S DAYS

PROJECT NAME: Pre-Construction Environmental Inspection
PROJECT BUILDING: Wastewater Treatment Plant
PROJECT ADDRESS: 145 Caesars Lane
New Windsor, NY 12553

Sample	HM#	Floor	Space Name/ID #	Location	Material	Results
5999-16		Exterior	Bypass Building	Roof, Field, Top Layer, On ISO Foam	EPDM	
5999-17		Exterior	Bypass Building	Double Doors, Frame, Metal to Brick and Mortar	Caulk	
5999-18		Exterior	Bypass Building	Double Doors, Frame, Metal to Brick and Mortar	Caulk	
5999-19		Exterior	Bypass Building	Window, Frame, Metal to Brick and Mortar	Caulk	
5999-20		Exterior	Bypass Building	Window, Frame, Metal to Brick and Mortar	Caulk	
5999-21		Interior	Grit Building	Wall, Perimeter, On Cementitious Block	Mortar	2998749
5999-22		Interior	Grit Building	Wall, Perimeter, On Cementitious Block	Mortar	2998750
5999-23		Interior	Grit Building	Wall, Perimeter	Cementitious Block	2998751
5999-24		Interior	Grit Building	Wall, Perimeter	Cementitious Block	2998752
5999-25		Interior	Grit Building	Floor	Cementitious Slab	2998753
5999-26		Interior	Grit Building	Floor	Cementitious Slab	2998754
5999-27		Exterior	Grit Building	Façade, On Cementitious Block	Mortar	2998755
5999-28		Exterior	Grit Building	Façade, On Cementitious Block	Mortar	2998756
5999-29		Exterior	Grit Building	Façade	Cementitious Block	2998757
5999-30		Exterior	Grit Building	Façade	Cementitious Block	2998758

Comments:

SUBMITTED BY: [signature] DATE: 03MAY2024

RECEIVED BY: [signature] MAY 3'24 DATE 21:17

Quality Environmental Solutions and Technologies, Inc.
Bulk Sample Chain of Custody

CLIENT: TOWN OF NEW WINDSOR
ADDRESS: 555 Union Avenue
New Windsor, NY 12553
CONTACT: Jessica Marina

PROJECT # : 24-5999
SAMPLED BY: S. Talsma/Z. Timpano
DATE SAMPLED: 2-May-24
STATE SAMPLED IN: NY
ANALYSIS METHOD: PLM/NOB-PLM/QTEM
TURN-AROUND TIME: 5 DAYS

PROJECT NAME: Pre-Construction Environmental Inspection
PROJECT BUILDING: Wastewater Treatment Plant
PROJECT ADDRESS: 145 Caesars Lane
New Windsor, NY 12553

Sample	HM#	Floor	Space Name/ID #	Location	Material	Results
5999-31		Exterior	Grit Building	Foundation, On Concrete	Waterproofing Tar	
5999-32		Exterior	Grit Building	Foundation, On Concrete	Waterproofing Tar	
5999-33		Exterior	Grit Building	Door, Frame, Metal to Cementitious Block and Mortar	Caulk	
5999-34		Exterior	Grit Building	Door, Frame, Metal to Cementitious Block and Mortar	Caulk	
5999-35		Exterior	Grit Building	Roof, Field	Cementitious Deck	2998759
5999-36		Exterior	Grit Building	Roof, Field	Cementitious Deck	2998760
5999-37		Exterior	Grit Building	Roof, Field, Top Layer, On Cementitious Deck	EPDM	
5999-38		Exterior	Grit Building	Roof, Field, Top Layer, On Cementitious Deck	EPDM	
5999-39		Exterior	Grit Building	Window, Frame, Metal to Cementitious Block and Mortar	Caulk	
5999-40		Exterior	Grit Building	Window, Frame, Metal to Cementitious Block and Mortar	Caulk	
5999-41		Exterior	Grit Building, Pit	On Metal Flange	Gasket	
5999-42		Exterior	Grit Building, Pit	On Metal Flange	Gasket	
5999-43		Exterior	Primary Settling Tank #2	Pipe	Cementitious Pipe	2998761
5999-44		Exterior	Primary Settling Tank #3	Pipe	Cementitious Pipe	2998762
5999-45		Exterior	Primary Settling Tank #2	Wall	Concrete	2998763

Comments:

SUBMITTED BY: [signature] DATE: 03MAY2024

RECEIVED BY: [signature] DATE: MAY 3'24 21:17

Quality Environmental Solutions and Technologies, Inc.
Bulk Sample Chain of Custody

CLIENT: TOWN OF NEW WINDSOR
ADDRESS: 555 Union Avenue
New Windsor, NY 12553
CONTACT: Jessica Marina

PROJECT # : 24-5999
SAMPLED BY: S. Talsma/Z. Timpano
DATE SAMPLED: 2-May-24
STATE SAMPLED IN: NY
ANALYSIS METHOD: PLM/NOB-PLM/QTEM

PROJECT NAME: Pre-Construction Environmental Inspection
PROJECT BUILDING: Wastewater Treatment Plant
PROJECT ADDRESS: 145 Caesars Lane
New Windsor, NY 12553

TURN-AROUND TIME: 5 DAYS

Sample	HM#	Floor	Space Name/ID #	Location	Material	Results
5999-46		Exterior	Recycling Pump Pit	Wall	Concrete	2998764
5999-47		Exterior	Settling Tank #1	Wall	Concrete	2998765
5999-48		Exterior	Secondary Settling Tank #2	Wall	Concrete	2998766
5999-49		Exterior	Settling Tank #3	Wall	Concrete	2998767
5999-50		Exterior	Trickling Filter #1	Wall	Concrete	2998768
5999-51		Exterior	Trickling Filter #2	Wall	Concrete	2998769
5999-52		Exterior	Trickling Filter #3	Wall	Concrete	2998770
5999-53		Exterior	Recycling Pump Pit	Wall, On Concrete	Waterproofing Tar	
5999-54		Exterior	Settling Tank #1	Wall, On Concrete	Waterproofing Tar	
5999-55		Exterior	Settling Tank #3	Wall, On Concrete	Waterproofing Tar	
5999-56		Exterior	Trickling Filter #1	Wall, On Concrete	Waterproofing Tar	
5999-57		Exterior	Shed #1	Roof, On Wood Deck	Shingle	
5999-58		Exterior	Shed #1	Roof, On Wood Deck	Shingle	
5999-59		Exterior	Shed #2	Rood, On Wood Deck	Shingle	
5999-60		Exterior	Shed #2	Rood, On Wood Deck	Shingle	

Comments:

SUBMITTED BY: Stewart J. Talsma

DATE: 03 MAY 2024

RECEIVED BY:

MAY 3'24 21:17

DATE:

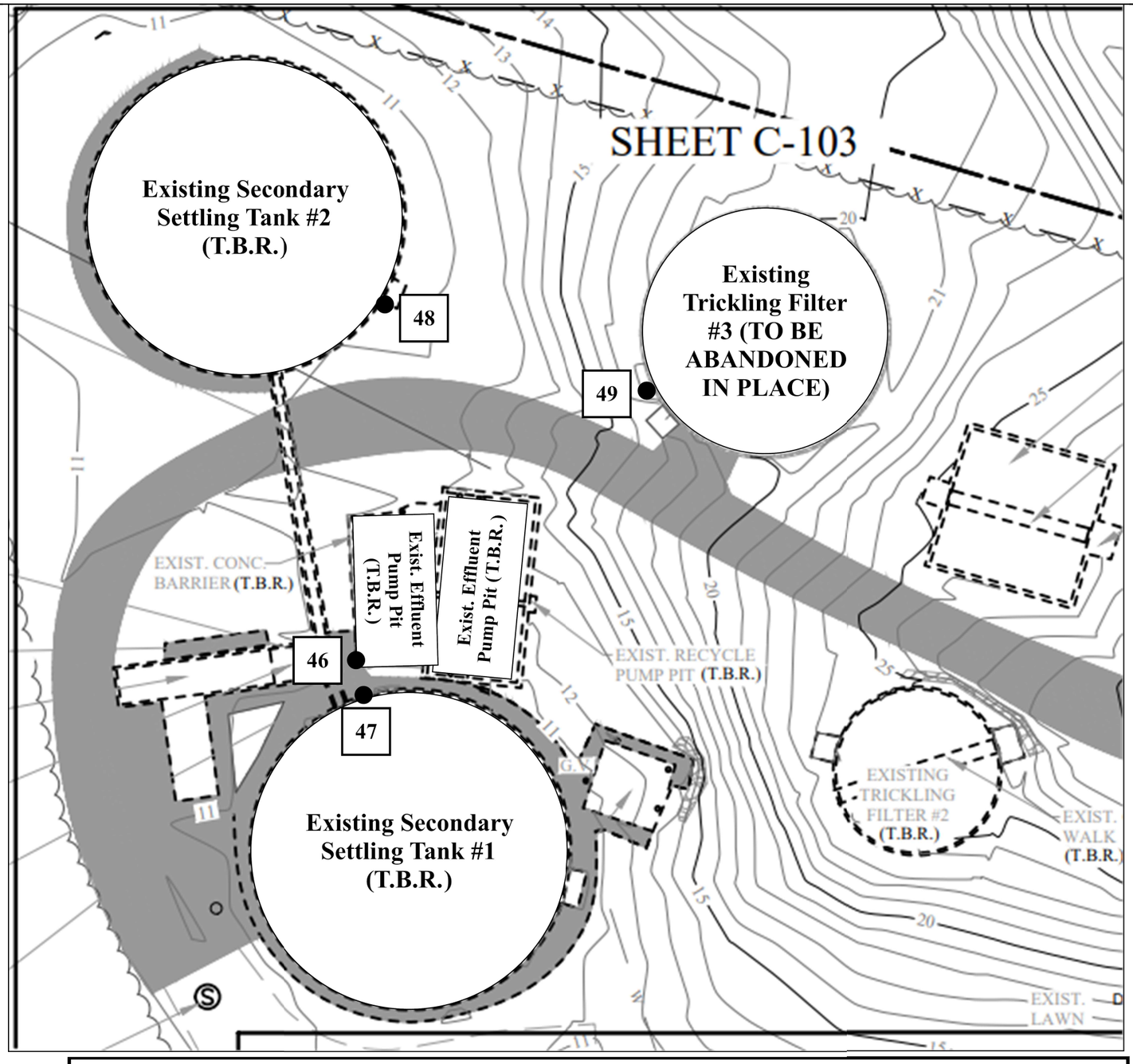

No Asbestos-containing Materials (ACM) identified upon PLM & QTEM/PLM analysis.

SAMPLE LOCATION KEY	
●	Non-ACM Sample Location(s)
●	ACM Sample Location(s)

N

Drawing Not to Scale
This Drawing is not intended to be used as the sole basis for soliciting pricing for asbestos abatement. An abatement plan, specification, drawing and/or variances should be developed to identify scope, timing, phasing and remediation means & methods for any asbestos project.

Date: 10MAY2024	Version # 1
Issued For: Asbestos Survey	
QuES&T Project # : 24-5999	
Project Manager: RWL	Prepared By: JL

QuES&T

Quality Environmental Solutions & Technologies, Inc.
1376 Route 9
Wappingers Falls, NY 12590
Phone: (845) 298- 6031
Fax: (845) 298-6251

CLIENT

TOWN OF NEW WINDSOR
555 Union Avenue
New Windsor, NY 12553

PROJECT LOCATION

Wastewater Treatment Plant
145 Caesars Lane
New Windsor, NY 12553

SITE PLAN SAMPLE LOCATIONS

SL-01

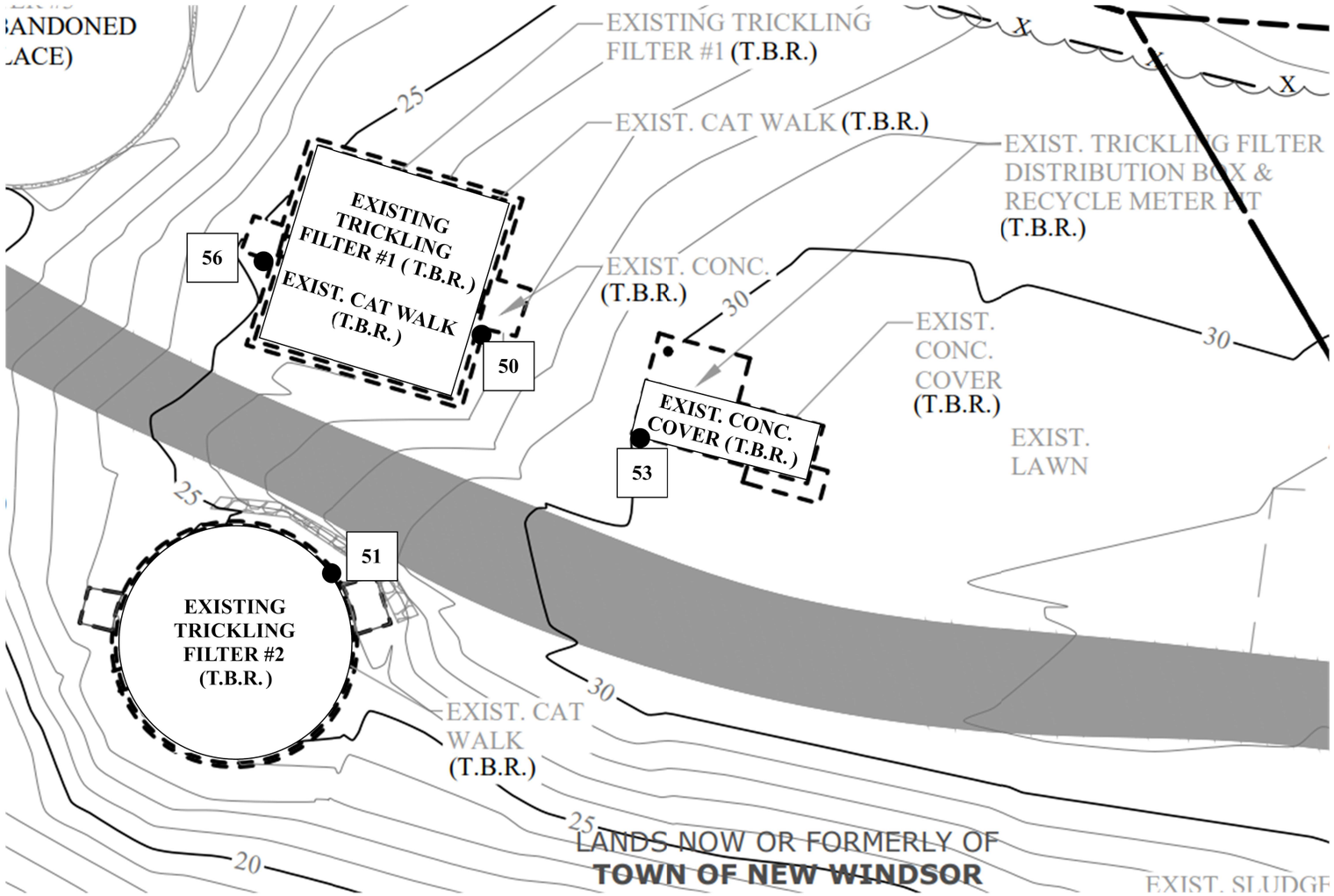

No Asbestos-containing Materials (ACM) identified upon PLM & QTEM/PLM analysis.

SAMPLE LOCATION KEY	
●	Non-ACM Sample Location(s)
●	ACM Sample Location(s)

N

Drawing Not to Scale
This Drawing is not intended to be used as the sole basis for soliciting pricing for asbestos abatement. An abatement plan, specification, drawing and/or variances should be developed to identify scope, timing, phasing and remediation means & methods for any asbestos project.

Date: 10MAY2024	**Version #** 1
Issued For: Asbestos Survey	
QuES&T Project #: 24-5999	
Project Manager: RWL	**Prepared By:** JL

QuES&T

Quality Environmental
Solutions & Technologies, Inc.
1376 Route 9
Wappingers Falls, NY 12590
Phone: (845) 298- 6031
Fax: (845) 298-6251

CLIENT

TOWN OF NEW WINDSOR
555 Union Avenue
New Windsor, NY 12553

PROJECT LOCATION

Wastewater Treatment Plant
145 Caesars Lane
New Windsor, NY 12553

SITE PLAN
SAMPLE LOCATIONS

SL-02

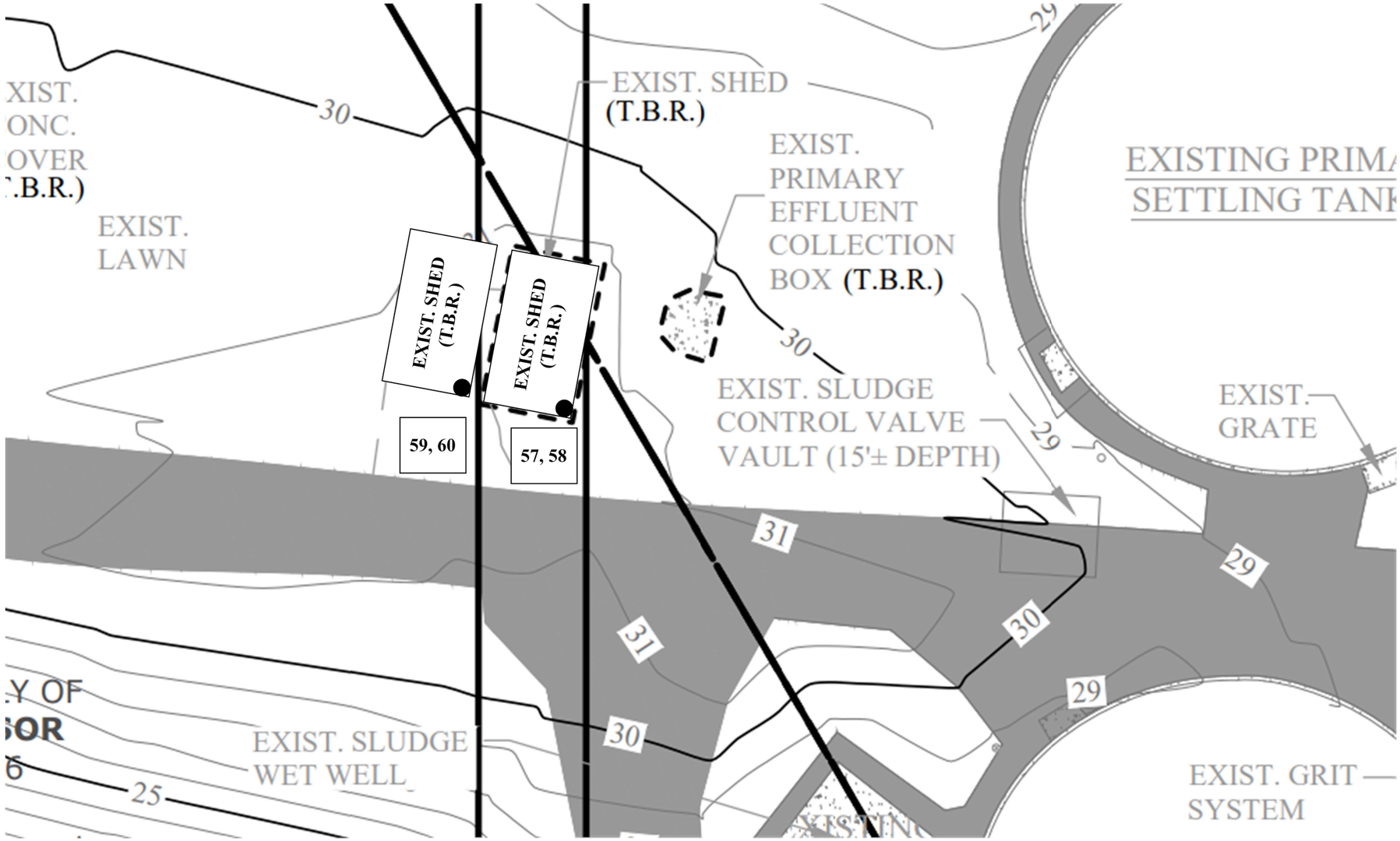

No Asbestos-containing Materials (ACM) identified upon PLM & QTEM/PLM analysis.

SAMPLE LOCATION KEY	
●	Non-ACM Sample Location(s)
●	ACM Sample Location(s)

N

Drawing Not to Scale

This Drawing is not intended to be used as the sole basis for soliciting pricing for asbestos abatement. An abatement plan, specification, drawing and/or variances should be developed to identify scope, timing, phasing and remediation means & methods for any asbestos project.

Date: 10MAY2024	**Version #** 1
Issued For: Asbestos Survey	
QuES&T Project #: 24-5999	
Project Manager: RWL	**Prepared By:** JL

QuES&T

Quality Environmental
Solutions & Technologies, Inc.
1376 Route 9
Wappingers Falls, NY 12590
Phone: (845) 298- 6031
Fax: (845) 298-6251

CLIENT

TOWN OF NEW WINDSOR
555 Union Avenue
New Windsor, NY 12553

PROJECT LOCATION

Wastewater Treatment Plant
145 Caesars Lane
New Windsor, NY 12553

SITE PLAN
SAMPLE LOCATIONS

SL-03

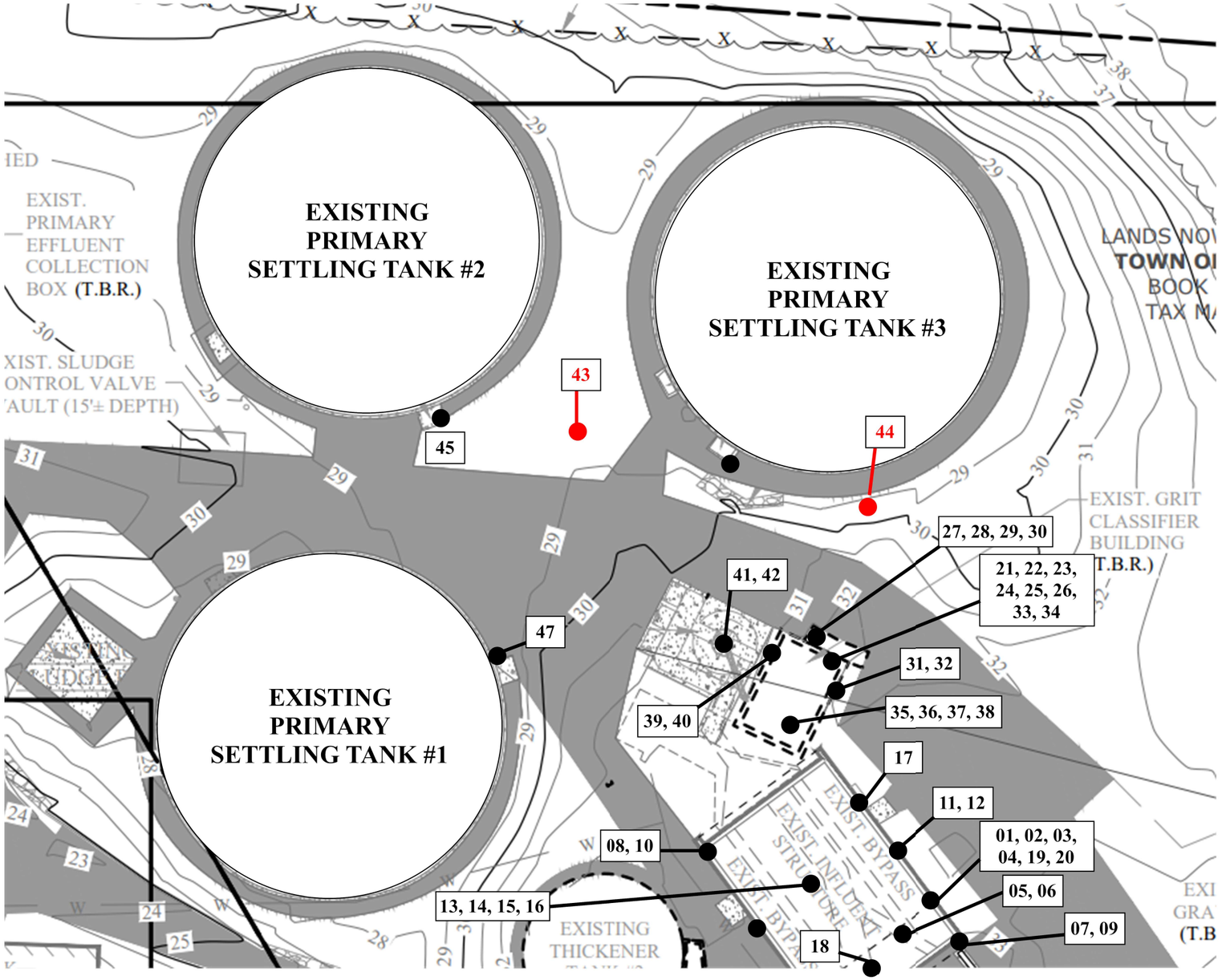

No Asbestos-containing Materials (ACM) identified uponPLM & QTEM/PLM analysis.

SAMPLE LOCATION KEY	
●	Non-ACM Sample Location(s)
●	ACM Sample Location(s)

N

Drawing Not to Scale
This Drawing is not intended to be used as the sole basis for soliciting pricing for asbestos abatement. An abatement plan, specification, drawing and/or variances should be developed to identify scope, timing, phasing and remediation means & methods for any asbestos project.

Date: 10MAY2024	Version # 1
Issued For: Asbestos Survey	
QuES&T Project # : 24-5999	
Project Manager: RWL	Prepared By: SDT

QuES&T

Quality Environmental
Solutions & Technologies, Inc.
1376 Route 9
Wappingers Falls, NY 12590
Phone: (845) 298- 6031
Fax: (845) 298-6251

CLIENT

TOWN OF NEW WINDSOR
555 Union Avenue
New Windsor, NY 12553

PROJECT LOCATION

Wastewater Treatment Plant
145 Caesars Lane
New Windsor, NY 12553

SITE PLAN
SAMPLE LOCATIONS

SL-04

QuES&T
Quality Environmental Solutions & Technologies, Inc.

Appendix C:
LEAD BASED PAINT PHOTOS
& XRF ANALYTICAL DATA

1376 Route 9, Wappingers Falls, NY 12590 Phone (845) 298-6031 Fax (845) 298-6251
NYS MWBD MBE Cert # 49952-2006 NYSUCP DBE Certified NJUCP DBE Certified www.Qualityenv.com

Photo – Bypass Building, Steel Beam/Columns – Blue LBP



Photo – Example of LBP Outer Railing (Primary Tank 1, 2, & Trickling Filter 2) – Metal Railing – Gray LBP



Photo – Example of Trickling Filer 1 & 2, Catwalk Support – Red LBP



Photo – Example of Filter Motor (Trickling Filer 1 & 2) Metal - Blue LBP



Quality Environmental Solutions & Technologies
1376 Route 9
Wappingers Falls, NY 12590
(845) 298-6031

Limited XRF LBP Testing

Town of New Windsor
@145 Caesars Lane, New Windsor, NY
Project# 245999

Sample	Building/Address	Interior/Exterior	Space/Room/Description	Object	Component	Substrate	Color	Condition	Result	Pb Concentration (mg/cm2)
1	NIST (<0.01)								Negative	0
2	***NIST (1.04 +/- 0.06)***								***Positive***	1
3	145 Caesars Lane, New Windsor, NY	Exterior	Bypass Building	Roof Vent	Shroud	Metal	Grey	Fair	Negative	-0.1
4	145 Caesars Lane, New Windsor, NY	Exterior	Bypass Building	Door		Metal	Grey	Fair	Negative	0
5	145 Caesars Lane, New Windsor, NY	Exterior	Bypass Building	Door	Casing	Metal	Grey	Fair	Negative	0.1
6	145 Caesars Lane, New Windsor, NY	Exterior	Bypass Building	Window	Casing	Metal	Black	Fair	Negative	0.2
7	145 Caesars Lane, New Windsor, NY	Interior	Bypass Building	Wall		CMU	Grey	Fair	Negative	-0.1
8	145 Caesars Lane, New Windsor, NY	Interior	Bypass Building	Door	Casing	Metal	Grey	Fair	Negative	-0.1
9	145 Caesars Lane, New Windsor, NY	Interior	Bypass Building	Wall		CMU	Blue	Poor	Negative	0.1
10	145 Caesars Lane, New Windsor, NY	Interior	Bypass Building	Floor	Curb	Concrete	Yellow	Poor	Negative	0.1
11	145 Caesars Lane, New Windsor, NY	Interior	Bypass Building	Valve	Support	Metal	Blue	Poor	Negative	-0.3
12	***145 Caesars Lane, New Windsor, NY***	***Interior***	***Bypass Building***	***Steel***	***Beam***	***Metal***	***Blue***	***Poor***	***Positive***	***1.4***
13	***145 Caesars Lane, New Windsor, NY***	***Interior***	***Bypass Building***	***Steel***	***Column***	***Metal***	***Blue***	***Poor***	***Positive***	***1***
14	145 Caesars Lane, New Windsor, NY	Exterior	Bypass Building	Vent	Pipe	Metal	Grey	Poor	Negative	0.2
15	145 Caesars Lane, New Windsor, NY	Exterior	Bypass Building	Façade	Base	Concrete	Black	Poor	Negative	0.1
16	145 Caesars Lane, New Windsor, NY	Exterior	Grit Classifier Building	Façade		Brick	Natural	Fair	Negative	0
17	145 Caesars Lane, New Windsor, NY	Exterior	Grit Classifier Building	Railing		Metal	Yellow	Poor	Negative	-0.1
18	145 Caesars Lane, New Windsor, NY	Exterior	Grit Classifier Building	Door		Metal	Grey	Fair	Negative	0.1
19	145 Caesars Lane, New Windsor, NY	Exterior	Grit Classifier Building	Door	Casing	Metal	Grey	Fair	Negative	0
20	145 Caesars Lane, New Windsor, NY	Interior	Grit Classifier Building	Wall		CMU	Grey	Fair	Negative	0
21	145 Caesars Lane, New Windsor, NY	Interior	Grit Classifier Building	Belt	Shroud	Metal	Blue	Fair	Negative	-0.1
22	145 Caesars Lane, New Windsor, NY	Interior	Grit Classifier Building	Belt	Support	Metal	Blue	Fair	Negative	0
23	145 Caesars Lane, New Windsor, NY	Interior	Grit Classifier Building	Motor		Metal	Grey	Fair	Negative	0
24	145 Caesars Lane, New Windsor, NY	Interior	Grit Classifier Building	Motor		Metal	Gold	Fair	Negative	-0.2
25	145 Caesars Lane, New Windsor, NY	Interior	Grit Classifier Building	Motor		Metal	Green	Fair	Negative	-0.1
26	145 Caesars Lane, New Windsor, NY	Interior	Grit Classifier Building	Pipe		Metal	Blue	Fair	Negative	0.1
27	145 Caesars Lane, New Windsor, NY	Interior	Grit Classifier Building	Grit Classifier		Metal	Blue	Fair	Negative	0.1
28	145 Caesars Lane, New Windsor, NY	Interior	Grit Classifier Building	Grit Classifier	Base	CMU	Yellow	Fair	Negative	0
29	145 Caesars Lane, New Windsor, NY	Interior	Bypass Building	Roof Deck		Metal	Grey	Fair	Negative	-0.1
30	145 Caesars Lane, New Windsor, NY	Interior	Bypass Building	Hangers		Metal	Grey	Fair	Negative	-0.1
31	145 Caesars Lane, New Windsor, NY	Interior	Grit Classifier Building	Roof Deck		Concrete	Grey	Fair	Negative	-0.1
32	145 Caesars Lane, New Windsor, NY	Exterior	Grit Classifier Building	Overhang		Wood	Blue	Fair	Negative	0.2
33	145 Caesars Lane, New Windsor, NY	Exterior	Grit Classifier Building	Pit		Concrete	Black	Poor	Negative	0
34	145 Caesars Lane, New Windsor, NY	Exterior	Grit Classifier Building	Pit	Valve	Metal	Blue	Fair	Negative	0.1
35	145 Caesars Lane, New Windsor, NY	Exterior	Grit Classifier Building	Pit	Valve	Metal	Grey	Fair	Negative	0.1
36	145 Caesars Lane, New Windsor, NY	Exterior	Grit Classifier Building	Pit	Motor Base	Metal	Black	Fair	Negative	-0.3
37	145 Caesars Lane, New Windsor, NY	Exterior	Grit Classifier Building	Pit	Motor	Metal	Grey	Fair	Negative	0.1
38	145 Caesars Lane, New Windsor, NY	Exterior	Grit Classifier Building	Pit	Piping	Metal	Blue	Fair	Negative	0
39	145 Caesars Lane, New Windsor, NY	Exterior	Thickener Tank #1	Façade		Plastic	White	Fair	Negative	0.1
40	145 Caesars Lane, New Windsor, NY	Exterior	Thickener Tank #1	Façade	Base	Concrete	White	Fair	Negative	-0.2
41	145 Caesars Lane, New Windsor, NY	Exterior	Thickener Tank #1	Thickener		Metal	Green	Poor	Negative	0.2
42	145 Caesars Lane, New Windsor, NY	Interior	Thickener Tank #1	Motor	Assembly	Metal	Blue	Fair	Negative	0
43	145 Caesars Lane, New Windsor, NY	Interior	Thickener Tank #1	Motor		Metal	Blue	Fair	Negative	0.1
44	145 Caesars Lane, New Windsor, NY	Interior	Thickener Tank #1	Motor	Shroud	Metal	Blue	Fair	Negative	0.2
45	145 Caesars Lane, New Windsor, NY	Interior	Thickener Tank #1	Catwalk	Rail	Metal	Grey	Fair	Negative	-0.3

Conducted: 5/2/2024
Niton XRF Technician(s): Zachary Timpano

46	145 Caesars Lane, New Windsor, NY	Interior	Thickener Tank #1	Catwalk	Supports	Metal	Rust	Poor	Negative	-0.1
47	145 Caesars Lane, New Windsor, NY	Exterior	Thickener Tank #2	Pipe		Metal	Blue	Fair	Negative	0
48	145 Caesars Lane, New Windsor, NY	Exterior	Thickener Tank #2	Thickener		Metal	Green	Fair	Negative	0
49	145 Caesars Lane, New Windsor, NY	Exterior	Thickener Tank #2	Thickener	Pit	Concrete	Black	Fair	Negative	0
50	145 Caesars Lane, New Windsor, NY	Interior	Thickener Tank #2	Catwalk	Support	Metal	Blue	Fair	Negative	0.1
51	145 Caesars Lane, New Windsor, NY	Interior	Thickener Tank #2	Floor		Concrete	Grey	Fair	Negative	0
52	145 Caesars Lane, New Windsor, NY	Exterior	Primary Tank #3	Catwalk	Base	Concrete	Black	Poor	Negative	0.1
53	145 Caesars Lane, New Windsor, NY	Exterior	Primary Tank #3	Catwalk	Rail	Metal	Grey	Intact	Negative	0
54	145 Caesars Lane, New Windsor, NY	Exterior	Primary Tank #3	Wall	Inner	Concrete	Light Blue	Fair	Negative	0.1
55	145 Caesars Lane, New Windsor, NY	Exterior	Primary Tank #2	Pipe		Transite	Blue	Poor	Negative	0.2
56	145 Caesars Lane, New Windsor, NY	Exterior	Primary Tank #2	Wall	Inner	Concrete	Light Blue	Poor	Negative	0.2
57	145 Caesars Lane, New Windsor, NY	Exterior	Primary Tank #2	Catwalk	Support	Concrete	Blue	Poor	Negative	0
58	145 Caesars Lane, New Windsor, NY	Exterior	Grit Classifier Building	Conduit/Piping		Plastic	Grey	Poor	Negative	0
59	145 Caesars Lane, New Windsor, NY	Exterior	Primary Tank #1	Wall	Inner	Concrete	Light Blue	Poor	Negative	-0.1
60	***145 Caesars Lane, New Windsor, NY***	***Exterior***	***Primary Tank #1***	***Railing***	***Outer***	***Metal***	***Grey***	***Poor***	***Positive***	***1.3***
61	***145 Caesars Lane, New Windsor, NY***	***Exterior***	***Primary Tank #1***	***Railing***	***Outer***	***Metal***	***Grey***	***Poor***	***Positive***	***1***
62	***145 Caesars Lane, New Windsor, NY***	***Exterior***	***Primary Tank #2***	***Railing***	***Outer***	***Metal***	***Grey***	***Poor***	***Positive***	***1***
63	145 Caesars Lane, New Windsor, NY	Exterior	Primary Tank #3	Railing	Outer	Metal	Grey	Poor	Negative	0
64	145 Caesars Lane, New Windsor, NY	Exterior	Effluent Collection Box	Base		Concrete	Black	Poor	Negative	0.1
65	145 Caesars Lane, New Windsor, NY	Exterior	Shed #1	Siding		Wood	Grey	Fair	Negative	-0.2
66	145 Caesars Lane, New Windsor, NY	Exterior	Shed #1	Garage Door		Metal	White	Fair	Negative	-0.1
67	145 Caesars Lane, New Windsor, NY	Exterior	Shed #1	Garage Door	Casing	Wood	White	Fair	Negative	0.2
68	145 Caesars Lane, New Windsor, NY	Exterior	Shed #1	Side Door		Wood	Grey	Fair	Negative	-0.2
69	145 Caesars Lane, New Windsor, NY	Exterior	Shed #1	Side Door	Casing	Wood	Grey	Fair	Negative	0.3
70	145 Caesars Lane, New Windsor, NY	Exterior	Shed #2	Garage Door		Metal	Brown	Fair	Negative	0.1
71	145 Caesars Lane, New Windsor, NY	Exterior	Shed #2	Garage Door	Casing	Wood	Beige	Fair	Negative	-0.1
72	145 Caesars Lane, New Windsor, NY	Exterior	Shed #2	Siding		Wood	Beige	Fair	Negative	0.2
73	145 Caesars Lane, New Windsor, NY	Exterior	Control Building	Façade		CMU	Grey	Fair	Negative	-0.1
74	145 Caesars Lane, New Windsor, NY	Exterior	Control Building	Door		Metal	Grey	Fair	Negative	-0.2
75	145 Caesars Lane, New Windsor, NY	Exterior	Control Building	Door	Casing	Metal	Grey	Poor	Negative	-0.1
76	145 Caesars Lane, New Windsor, NY	Exterior	Control Building	Vent Pipe		Metal	Yellow	Fair	Negative	0.4
77	145 Caesars Lane, New Windsor, NY	Exterior	Control Building	Window	Base	Concrete	Blue	Fair	Negative	-0.1
78	145 Caesars Lane, New Windsor, NY	Exterior	Control Building	Window	Casing	Metal	Grey	Poor	Negative	0
79	145 Caesars Lane, New Windsor, NY	Exterior	Control Building	Garage Door		Metal	Brown	Fair	Negative	0
80	145 Caesars Lane, New Windsor, NY	Exterior	Control Building	Stair	Stringer	Metal	Grey	Fair	Negative	0
81	145 Caesars Lane, New Windsor, NY	Exterior	Control Building	Stair	Tread	Metal	Grey	Fair	Negative	0
82	145 Caesars Lane, New Windsor, NY	Exterior	Control Building	Stair	Railing	Metal	Yellow	Fair	Negative	0
83	145 Caesars Lane, New Windsor, NY	Exterior	Control Building	Overhang	Ceiling	Wood	Red	Fair	Negative	0
84	145 Caesars Lane, New Windsor, NY	Exterior	Control Building	Railing		Metal	Grey	Fair	Negative	0
85	145 Caesars Lane, New Windsor, NY	Exterior	Control Building	Floor		Concrete	Grey	Fair	Negative	0.1
86	145 Caesars Lane, New Windsor, NY	Exterior	Side Entry	Overhang	Support	Metal	Grey	Fair	Negative	0.1
87	145 Caesars Lane, New Windsor, NY	Exterior	Side Entry	Overhang	Support Beam	Metal	Blue	Fair	Negative	0.3
88	145 Caesars Lane, New Windsor, NY	Exterior	Side Entry	Door		Metal	Grey	Fair	Negative	0.2
89	145 Caesars Lane, New Windsor, NY	Exterior	Side Entry	Door	Casing	Metal	Grey	Fair	Negative	-0.2
90	145 Caesars Lane, New Windsor, NY	Exterior	Trickling Filter Distribution Box	Concrete Pad	Top	Concrete	Grey	Poor	Negative	0.6
91	145 Caesars Lane, New Windsor, NY	Exterior	Trickling Filter Distribution Box	Concrete Pad	Side	Concrete	Black	Poor	Negative	0.2
92	145 Caesars Lane, New Windsor, NY	Exterior	Trickling Filter Distribution Box	Valve #3		Metal	Blue	Poor	Negative	0.1
93	145 Caesars Lane, New Windsor, NY	Exterior	Trickling Filter #1	Railing		Metal	Grey	Poor	Negative	0

94	145 Caesars Lane, New Windsor, NY	Exterior	Trickling Filter #1	Concrete Pad	Top	Concrete	Black	Poor	Negative	0.2
95	***145 Caesars Lane, New Windsor, NY***	***Exterior***	***Trickling Filter #1***	***Catwalk***	***Supports***	***Metal***	***Red***	***Poor***	***Positive***	***2.4***
96	***145 Caesars Lane, New Windsor, NY***	***Exterior***	***Trickling Filter #1***	***Filter***	***Motor***	***Metal***	***Blue***	***Poor***	***Positive***	***2.3***
97	145 Caesars Lane, New Windsor, NY	Exterior	Trickling Filter #1	Wall	Inner	Concrete	Light Blue	Poor	Negative	0.1
98	***145 Caesars Lane, New Windsor, NY***	***Exterior***	***Trickling Filter #2***	***Catwalk***	***Supports***	***Metal***	***Red***	***Poor***	***Positive***	***2.5***
99	***145 Caesars Lane, New Windsor, NY***	***Exterior***	***Trickling Filter #2***	***Filter***	***Motor***	***Metal***	***Blue***	***Poor***	***Positive***	***1***
100	***145 Caesars Lane, New Windsor, NY***	***Exterior***	***Trickling Filter #2***	***Railing***		***Metal***	***Grey***	***Poor***	***Positive***	***4.3***
101	145 Caesars Lane, New Windsor, NY	Exterior	Trickling Filter #2	Concrete Pad	Top	Concrete	Black	Poor	Negative	0
102	145 Caesars Lane, New Windsor, NY	Exterior	Trickling Filter #2	Wall	Inner	Concrete	Light Blue	Poor	Negative	-0.1
103	145 Caesars Lane, New Windsor, NY	Exterior	Trickling Filter #3	Railing		Metal	Grey	Fair	Negative	-0.1
104	145 Caesars Lane, New Windsor, NY	Exterior	Trickling Filter #3	Base		Concrete	Black	Poor	Negative	-0.1
105	145 Caesars Lane, New Windsor, NY	Exterior	Trickling Filter #3	Wall	Inner	Concrete	Light Blue	Poor	Negative	-0.1
106	145 Caesars Lane, New Windsor, NY	Exterior	Recycle Pump Pit	Concrete Pad		Concrete	Black	Poor	Negative	0.1
107	145 Caesars Lane, New Windsor, NY	Exterior	Recycle Pump Pit	Metal Deck		Metal	Grey	Poor	Negative	0
108	145 Caesars Lane, New Windsor, NY	Exterior	Recycle Pump Pit	Railing		Metal	Grey	Poor	Negative	0
109	145 Caesars Lane, New Windsor, NY	Exterior	Recycle Pump Pit	Wall	Inner	Concrete	Light Blue	Poor	Negative	0
110	145 Caesars Lane, New Windsor, NY	Exterior	Recycle Pump Pit	Railing		Metal	Green	Poor	Positive	1.2
111	145 Caesars Lane, New Windsor, NY	Exterior	Settling Tank #1	Railing		Metal	Green	Poor	Positive	1.8
112	145 Caesars Lane, New Windsor, NY	Exterior	Settling Tank #1	Concrete Pad		Concrete	Black	Poor	Negative	0.1
113	145 Caesars Lane, New Windsor, NY	Exterior	Settling Tank #1	Catwalk	Support	Metal	Grey	Poor	Negative	0.5
114	145 Caesars Lane, New Windsor, NY	Exterior	Settling Tank #1	Motor		Metal	Red	Poor	Negative	0.2
115	145 Caesars Lane, New Windsor, NY	Exterior	Settling Tank #1	Motor	Belt Shroud	Metal	Red	Poor	Negative	-0.1
116	145 Caesars Lane, New Windsor, NY	Exterior	Settling Tank #1	Wall	Inner	Concrete	Light Blue	Poor	Negative	-0.1
117	145 Caesars Lane, New Windsor, NY	Exterior	Settling Tank #1	Pipe	Cap	Metal	Grey	Poor	Negative	0.1
118	145 Caesars Lane, New Windsor, NY	Exterior	Settling Tank #2	Railing		Metal	Grey	Poor	Negative	0
119	145 Caesars Lane, New Windsor, NY	Exterior	Settling Tank #2	Catwalk	Support	Metal	Grey	Poor	Negative	0.6
120	145 Caesars Lane, New Windsor, NY	Exterior	Settling Tank #2	Motor	Assembly	Metal	Light Blue	Poor	Negative	0.1
121	145 Caesars Lane, New Windsor, NY	Exterior	Settling Tank #2	Electric Panel		Metal	Grey	Poor	Negative	0.1
122	145 Caesars Lane, New Windsor, NY	Exterior	Settling Tank #2	Wall	Inner	Concrete	Light Blue	Poor	Negative	0.2
123	NIST (<0.01)									-0.1
124	***NIST (1.04 +/- 0.06)***									0.9

QuES&T
Quality Environmental Solutions & Technologies, Inc.

Appendix D:
PCB ANALYTICAL DATA

1376 Route 9, Wappingers Falls, NY 12590 Phone (845) 298-6031 Fax (845) 298-6251
NYS MWBD MBE Cert # 49952-2006 NYSUCP DBE Certified NJUCP DBE Certified www.Qualityenv.com

Technical Report

prepared for:

QuES & T
1376 Rt. 9
Wappingers Falls NY, 12590
Attention: Angela Holzapfel

Report Date: 05/13/2024
Client Project ID: Town of New Windsor 24-5999
York Project (SDG) No.: 24E0213

Stratford, CT Laboratory IDs:
NY:10854, NJ: CT005, PA: 68-0440, CT: PH-0723

Richmond Hill, NY Laboratory IDs:
NY:12058, NJ: NY037, CT: PH-0721, NH: 2097,
EPA: NY01600

120 RESEARCH DRIVE STRATFORD, CT 06615 ■ 132-02 89th AVENUE RICHMOND HILL, NY 11418
www.YORKLAB.com (203) 325-1371 FAX (203) 357-0166 ClientServices@yorklab.com

Report Date: 05/13/2024
Client Project ID: Town of New Windsor 24-5999
York Project (SDG) No.: 24E0213

QuES & T
1376 Rt. 9
Wappingers Falls NY, 12590
Attention: Angela Holzapfel

Purpose and Results

This report contains the analytical data for the sample(s) identified on the attached chain-of-custody received in our laboratory on May 03, 2024 and listed below. The project was identified as your project: **Town of New Windsor 24-5999**.

The analyses were conducted utilizing appropriate EPA, Standard Methods, and ASTM methods as detailed in the data summary tables.

All samples were received in proper condition meeting the customary acceptance requirements for environmental samples except those indicated under the Sample and Analysis Qualifiers section of this report.

All analyses met the method and laboratory standard operating procedure requirements except as indicated by any data flags, the meaning of which are explained in the Sample and Data Qualifiers Relating to This Work Order section of this report and case narrative if applicable.

The results of the analyses, which are all reported on dry weight basis (soils) unless otherwise noted, are detailed in the following pages.

Please contact Client Services at 203.325.1371 with any questions regarding this report.

York Sample ID	Client Sample ID	Matrix	Date Collected	Date Received
24E0213-01	5999-PCB-01	Caulk	05/02/2024	05/03/2024
24E0213-02	5999-PCB-02	Caulk	05/02/2024	05/03/2024
24E0213-03	5999-PCB-03	Caulk	05/02/2024	05/03/2024
24E0213-04	5999-PCB-04	Caulk	05/02/2024	05/03/2024

General Notes for York Project (SDG) No.: 24E0213

1. The RLs and MDLs (Reporting Limit and Method Detection Limit respectively) reported are adjusted for any dilution necessary due to the levels of target and/or non-target analytes and matrix interference. The RL(REPORTING LIMIT) is based upon the lowest standard utilized for the calibration where applicable.
2. Samples are retained for a period of thirty days after submittal of report, unless other arrangements are made.
3. York's liability for the above data is limited to the dollar value paid to York for the referenced project.
4. This report shall not be reproduced without the written approval of York Analytical Laboratories, Inc.
5. All analyses conducted met method or Laboratory SOP requirements. See the Sample and Data Qualifiers Section for further information.
6. It is noted that no analyses reported herein were subcontracted to another laboratory, unless noted in the report.
7. This report reflects results that relate only to the samples submitted on the attached chain-of-custody form(s) received by York.
8. Analyses conducted at York Analytical Laboratories, Inc. Stratford, CT are indicated by NY Cert. No. 10854, NJ Cert No. CT005, PA Cert No. 68-04440, CT Cert No. PH-0723; those conducted at York Analytical Laboratories, Inc., Richmond Hill, NY are indicated by NY Cert. No. 12058, NJ Cert No. NY037, CT Cert No. PH-0721, NH Cert No. 2097, EPA Cert No. NY01600.

Approved By: Cassie L. Mosher

Date: 05/13/2024

Cassie L. Mosher
Laboratory Manager

Sample Information

Client Sample ID: 5999-PCB-01 **York Sample ID:** 24E0213-01

York Project (SDG) No.	Client Project ID	Matrix	Collection Date/Time	Date Received
24E0213	Town of New Windsor 24-5999	Caulk	May 2, 2024 3:00 pm	05/03/2024

Polychlorinated Biphenyls (PCB)

Log-in Notes:

Sample Notes:

Sample Prepared by Method: EPA 3550C

CAS No.	Parameter	Result	Flag	Units	Reported to LOQ	Dilution	Reference Method	Date/Time Prepared	Date/Time Analyzed	Analyst
12674-11-2	Aroclor 1016	ND		mg/kg	0.311	1	EPA 8082A Certifications:	05/13/2024 08:05 NELAC-NY10854,CTDOH-PH-0723,NJDEP-CT005	05/13/2024 14:45	NF
11104-28-2	Aroclor 1221	ND		mg/kg	0.311	1	EPA 8082A Certifications:	05/13/2024 08:05 NELAC-NY10854,CTDOH-PH-0723,NJDEP-CT005	05/13/2024 14:45	NF
11141-16-5	Aroclor 1232	ND		mg/kg	0.311	1	EPA 8082A Certifications:	05/13/2024 08:05 NELAC-NY10854,CTDOH-PH-0723,NJDEP-CT005	05/13/2024 14:45	NF
53469-21-9	Aroclor 1242	ND		mg/kg	0.311	1	EPA 8082A Certifications:	05/13/2024 08:05 NELAC-NY10854,CTDOH-PH-0723,NJDEP-CT005	05/13/2024 14:45	NF
12672-29-6	Aroclor 1248	ND		mg/kg	0.311	1	EPA 8082A Certifications:	05/13/2024 08:05 NELAC-NY10854,CTDOH-PH-0723,NJDEP-CT005	05/13/2024 14:45	NF
11097-69-1	Aroclor 1254	ND		mg/kg	0.311	1	EPA 8082A Certifications:	05/13/2024 08:05 NELAC-NY10854,CTDOH-PH-0723,NJDEP-CT005	05/13/2024 14:45	NF
11096-82-5	Aroclor 1260	ND		mg/kg	0.311	1	EPA 8082A Certifications:	05/13/2024 08:05 NELAC-NY10854,CTDOH-PH-0723,NJDEP-CT005	05/13/2024 14:45	NF
1336-36-3	* Total PCBs	ND		mg/kg	0.311	1	EPA 8082A Certifications:	05/13/2024 08:05	05/13/2024 14:45	NF

	Surrogate Recoveries	Result	Acceptance Range
877-09-8	*Surrogate: Tetrachloro-m-xylene*	*78.0 %*	*30-140*
2051-24-3	*Surrogate: Decachlorobiphenyl*	*90.5 %*	*30-140*

Sample Information

Client Sample ID: 5999-PCB-02 **York Sample ID:** 24E0213-02

York Project (SDG) No.	Client Project ID	Matrix	Collection Date/Time	Date Received
24E0213	Town of New Windsor 24-5999	Caulk	May 2, 2024 3:00 pm	05/03/2024

Polychlorinated Biphenyls (PCB)

Log-in Notes:

Sample Notes:

Sample Prepared by Method: EPA 3550C

CAS No.	Parameter	Result	Flag	Units	Reported to LOQ	Dilution	Reference Method	Date/Time Prepared	Date/Time Analyzed	Analyst
12674-11-2	Aroclor 1016	ND		mg/kg	0.379	1	EPA 8082A Certifications:	05/13/2024 08:05 NELAC-NY10854,CTDOH-PH-0723,NJDEP-CT005	05/13/2024 14:58	NF
11104-28-2	Aroclor 1221	ND		mg/kg	0.379	1	EPA 8082A Certifications:	05/13/2024 08:05 NELAC-NY10854,CTDOH-PH-0723,NJDEP-CT005	05/13/2024 14:58	NF
11141-16-5	Aroclor 1232	ND		mg/kg	0.379	1	EPA 8082A Certifications:	05/13/2024 08:05 NELAC-NY10854,CTDOH-PH-0723,NJDEP-CT005	05/13/2024 14:58	NF
53469-21-9	Aroclor 1242	ND		mg/kg	0.379	1	EPA 8082A Certifications:	05/13/2024 08:05 NELAC-NY10854,CTDOH-PH-0723,NJDEP-CT005	05/13/2024 14:58	NF
12672-29-6	Aroclor 1248	ND		mg/kg	0.379	1	EPA 8082A Certifications:	05/13/2024 08:05 NELAC-NY10854,CTDOH-PH-0723,NJDEP-CT005	05/13/2024 14:58	NF

Sample Information

Client Sample ID: 5999-PCB-02 **York Sample ID:** 24E0213-02

York Project (SDG) No.	Client Project ID	Matrix	Collection Date/Time	Date Received
24E0213	Town of New Windsor 24-5999	Caulk	May 2, 2024 3:00 pm	05/03/2024

Polychlorinated Biphenyls (PCB)

Log-in Notes:

Sample Notes:

Sample Prepared by Method: EPA 3550C

CAS No.	Parameter	Result	Flag	Units	Reported to LOQ	Dilution	Reference Method	Date/Time Prepared	Date/Time Analyzed	Analyst
11097-69-1	Aroclor 1254	ND		mg/kg	0.379	1	EPA 8082A Certifications:	05/13/2024 08:05	05/13/2024 14:58 NELAC-NY10854,CTDOH-PH-0723,NJDEP-CT005	NF
11096-82-5	Aroclor 1260	ND		mg/kg	0.379	1	EPA 8082A Certifications:	05/13/2024 08:05	05/13/2024 14:58 NELAC-NY10854,CTDOH-PH-0723,NJDEP-CT005	NF
1336-36-3	* Total PCBs	ND		mg/kg	0.379	1	EPA 8082A Certifications:	05/13/2024 08:05	05/13/2024 14:58	NF

	Surrogate Recoveries	Result	Acceptance Range
877-09-8	*Surrogate: Tetrachloro-m-xylene*	*74.0 %*	*30-140*
2051-24-3	*Surrogate: Decachlorobiphenyl*	*93.5 %*	*30-140*

Sample Information

Client Sample ID: 5999-PCB-03 **York Sample ID:** 24E0213-03

York Project (SDG) No.	Client Project ID	Matrix	Collection Date/Time	Date Received
24E0213	Town of New Windsor 24-5999	Caulk	May 2, 2024 3:00 pm	05/03/2024

Polychlorinated Biphenyls (PCB)

Log-in Notes:

Sample Notes:

Sample Prepared by Method: EPA 3550C

CAS No.	Parameter	Result	Flag	Units	Reported to LOQ	Dilution	Reference Method	Date/Time Prepared	Date/Time Analyzed	Analyst
12674-11-2	Aroclor 1016	ND		mg/kg	0.210	1	EPA 8082A Certifications:	05/13/2024 08:05	05/13/2024 15:12 NELAC-NY10854,CTDOH-PH-0723,NJDEP-CT005	NF
11104-28-2	Aroclor 1221	ND		mg/kg	0.210	1	EPA 8082A Certifications:	05/13/2024 08:05	05/13/2024 15:12 NELAC-NY10854,CTDOH-PH-0723,NJDEP-CT005	NF
11141-16-5	Aroclor 1232	ND		mg/kg	0.210	1	EPA 8082A Certifications:	05/13/2024 08:05	05/13/2024 15:12 NELAC-NY10854,CTDOH-PH-0723,NJDEP-CT005	NF
53469-21-9	Aroclor 1242	ND		mg/kg	0.210	1	EPA 8082A Certifications:	05/13/2024 08:05	05/13/2024 15:12 NELAC-NY10854,CTDOH-PH-0723,NJDEP-CT005	NF
12672-29-6	Aroclor 1248	ND		mg/kg	0.210	1	EPA 8082A Certifications:	05/13/2024 08:05	05/13/2024 15:12 NELAC-NY10854,CTDOH-PH-0723,NJDEP-CT005	NF
11097-69-1	Aroclor 1254	ND		mg/kg	0.210	1	EPA 8082A Certifications:	05/13/2024 08:05	05/13/2024 15:12 NELAC-NY10854,CTDOH-PH-0723,NJDEP-CT005	NF
11096-82-5	Aroclor 1260	ND		mg/kg	0.210	1	EPA 8082A Certifications:	05/13/2024 08:05	05/13/2024 15:12 NELAC-NY10854,CTDOH-PH-0723,NJDEP-CT005	NF
1336-36-3	* Total PCBs	ND		mg/kg	0.210	1	EPA 8082A Certifications:	05/13/2024 08:05	05/13/2024 15:12	NF

	Surrogate Recoveries	Result	Acceptance Range
877-09-8	*Surrogate: Tetrachloro-m-xylene*	*78.0 %*	*30-140*
2051-24-3	*Surrogate: Decachlorobiphenyl*	*94.0 %*	*30-140*

Sample Information

Client Sample ID: 5999-PCB-04 **York Sample ID:** 24E0213-04

York Project (SDG) No.	Client Project ID	Matrix	Collection Date/Time	Date Received
24E0213	Town of New Windsor 24-5999	Caulk	May 2, 2024 3:00 pm	05/03/2024

Polychlorinated Biphenyls (PCB)

Log-in Notes:

Sample Notes:

Sample Prepared by Method: EPA 3550C

CAS No.	Parameter	Result	Flag	Units	Reported to LOQ	Dilution	Reference Method	Date/Time Prepared	Date/Time Analyzed	Analyst
12674-11-2	Aroclor 1016	ND		mg/kg	0.311	1	EPA 8082A Certifications:	05/13/2024 08:05 NELAC-NY10854,CTDOH-PH-0723,NJDEP-CT005	05/13/2024 15:26	NF
11104-28-2	Aroclor 1221	ND		mg/kg	0.311	1	EPA 8082A Certifications:	05/13/2024 08:05 NELAC-NY10854,CTDOH-PH-0723,NJDEP-CT005	05/13/2024 15:26	NF
11141-16-5	Aroclor 1232	ND		mg/kg	0.311	1	EPA 8082A Certifications:	05/13/2024 08:05 NELAC-NY10854,CTDOH-PH-0723,NJDEP-CT005	05/13/2024 15:26	NF
53469-21-9	Aroclor 1242	ND		mg/kg	0.311	1	EPA 8082A Certifications:	05/13/2024 08:05 NELAC-NY10854,CTDOH-PH-0723,NJDEP-CT005	05/13/2024 15:26	NF
12672-29-6	Aroclor 1248	ND		mg/kg	0.311	1	EPA 8082A Certifications:	05/13/2024 08:05 NELAC-NY10854,CTDOH-PH-0723,NJDEP-CT005	05/13/2024 15:26	NF
11097-69-1	Aroclor 1254	ND		mg/kg	0.311	1	EPA 8082A Certifications:	05/13/2024 08:05 NELAC-NY10854,CTDOH-PH-0723,NJDEP-CT005	05/13/2024 15:26	NF
11096-82-5	Aroclor 1260	ND		mg/kg	0.311	1	EPA 8082A Certifications:	05/13/2024 08:05 NELAC-NY10854,CTDOH-PH-0723,NJDEP-CT005	05/13/2024 15:26	NF
1336-36-3	* Total PCBs	ND		mg/kg	0.311	1	EPA 8082A Certifications:	05/13/2024 08:05	05/13/2024 15:26	NF

	Surrogate Recoveries	Result	Acceptance Range
877-09-8	*Surrogate: Tetrachloro-m-xylene*	*61.5 %*	*30-140*
2051-24-3	*Surrogate: Decachlorobiphenyl*	*82.5 %*	*30-140*

Analytical Batch Summary

Batch ID: BE40814 **Preparation Method:** EPA 3550C **Prepared By:** JM

YORK Sample ID	Client Sample ID	Preparation Date
24E0213-01	5999-PCB-01	05/13/24
24E0213-02	5999-PCB-02	05/13/24
24E0213-03	5999-PCB-03	05/13/24
24E0213-04	5999-PCB-04	05/13/24
BE40814-BLK1	Blank	05/13/24
BE40814-BS1	LCS	05/13/24
BE40814-BSD1	LCS Dup	05/13/24

Polychlorinated Biphenyls by GC/ECD - Quality Control Data

York Analytical Laboratories, Inc. - Stratford

Analyte	Result	Reporting Limit	Units	Spike Level	Source* Result	%REC	%REC Limits	Flag	RPD	RPD Limit	Flag
Batch BE40814 - EPA 3550C											
Blank (BE40814-BLK1)								Prepared & Analyzed: 05/13/2024			
Aroclor 1016	ND	0.495	mg/kg								
Aroclor 1221	ND	0.495	"								
Aroclor 1232	ND	0.495	"								
Aroclor 1242	ND	0.495	"								
Aroclor 1248	ND	0.495	"								
Aroclor 1254	ND	0.495	"								
Aroclor 1260	ND	0.495	"								
Total PCBs	ND	0.495	"								
Surrogate: Tetrachloro-m-xylene	*1.71*		"	*1.98*		*86.5*	*30-140*				
Surrogate: Decachlorobiphenyl	*1.75*		"	*1.98*		*88.5*	*30-140*				
LCS (BE40814-BS1)								Prepared & Analyzed: 05/13/2024			
Aroclor 1016	8.04	0.495	mg/kg	9.90		81.2	40-130				
Aroclor 1260	8.60	0.495	"	9.90		86.8	40-130				
Surrogate: Tetrachloro-m-xylene	*1.68*		"	*1.98*		*85.0*	*30-140*				
Surrogate: Decachlorobiphenyl	*2.00*		"	*1.98*		*101*	*30-140*				
LCS Dup (BE40814-BSD1)								Prepared & Analyzed: 05/13/2024			
Aroclor 1016	8.48	0.495	mg/kg	9.90		85.6	40-130		5.25	25	
Aroclor 1260	8.55	0.495	"	9.90		86.3	40-130		0.554	25	
Surrogate: Tetrachloro-m-xylene	*1.75*		"	*1.98*		*88.5*	*30-140*				
Surrogate: Decachlorobiphenyl	*1.89*		"	*1.98*		*95.5*	*30-140*				

Sample and Data Qualifiers Relating to This Work Order

Definitions and Other Explanations

*	Analyte is not certified or the state of the samples origination does not offer certification for the Analyte.
ND	NOT DETECTED - the analyte is not detected at the Reported to level (LOQ/RL or LOD/MDL)
RL	REPORTING LIMIT - the minimum reportable value based upon the lowest point in the analyte calibration curve.
LOQ	LIMIT OF QUANTITATION - the minimum concentration of a target analyte that can be reported within a specified degree of confidence. This is the lowest point in an analyte calibration curve that has been subjected to all steps of the processing/analysis and verified to meet defined criteria. This is based upon NELAC 2009 Standards and applies to all analyses.
LOD	LIMIT OF DETECTION - a verified estimate of the minimum concentration of a substance in a given matrix that an analytical process can reliably detect. This is based upon NELAC 2009 Standards and applies to all analyses conducted under the auspices of EPA SW-846.
MDL	METHOD DETECTION LIMIT - a statistically derived estimate of the minimum amount of a substance an analytical system can reliably detect with a 99% confidence that the concentration of the substance is greater than zero. This is based upon 40 CFR Part 136 Appendix B and applies only to EPA 600 and 200 series methods.
Reported to	This indicates that the data for a particular analysis is reported to either the LOD/MDL, or the LOQ/RL. In cases where the "Reported to" is located above the LOD/MDL, any value between this and the LOQ represents an estimated value which is "J" flagged accordingly. This applies to volatile and semi-volatile target compounds only.
NR	Not reported
RPD	Relative Percent Difference
Wet	The data has been reported on an as-received (wet weight) basis
Low Bias	Low Bias flag indicates that the recovery of the flagged analyte is below the laboratory or regulatory lower control limit. The data user should take note that this analyte may be biased low but should evaluate multiple lines of evidence including the LCS and site-specific MS/MSD data to draw bias conclusions. In cases where no site-specific MS/MSD was requested, only the LCS data can be used to evaluate such bias.
High Bias	High Bias flag indicates that the recovery of the flagged analyte is above the laboratory or regulatory upper control limit. The data user should take note that this analyte may be biased high but should evaluate multiple lines of evidence including the LCS and site-specific MS/MSD data to draw bias conclusions. In cases where no site-specific MS/MSD was requested, only the LCS data can be used to evaluate such bias.
Non-Dir.	Non-dir. flag (Non-Directional Bias) indicates that the Relative Percent Difference (RPD) (a measure of precision) among the MS and MSD data is outside the laboratory or regulatory control limit. This alerts the data user where the MS and MSD are from site-specific samples that the RPD is high due to either non-homogeneous distribution of target analyte between the MS/MSD or indicates poor reproducibility for other reasons.

If EPA SW-846 method 8270 is included herein it is noted that the target compound N-nitrosodiphenylamine (NDPA) decomposes in the gas chromatographic inlet and cannot be separated from diphenylamine (DPA). These results could actually represent 100% DPA, 100% NDPA or some combination of the two. For this reason, York reports the combined result for n-nitrosodiphenylamine and diphenylamine for either of these compounds as a combined concentration as Diphenylamine.

If Total PCBs are detected and the target aroclors reported are "Not detected", the Total PCB value is reported due to the presence of either or both Aroclors 1262 and 1268 which are non-target aroclors for some regulatory lists.

2-chloroethylvinyl ether readily breaks down under acidic conditions. Samples that are acid preserved, including standards will exhibit breakdown. The data user should take note.

Certification for pH is no longer offered by NYDOH ELAP.

Semi-Volatile and Volatile analyses are reported down to the LOD/MDL, with values between the LOD/MDL and the LOQ being "J" flagged as estimated results.

For analyses by EPA SW-846-8270D, the Limit of Quantitation (LOQ) reported for benzidine is based upon the lowest standard used for calibration and is not a verified LOQ due to this compound's propensity for oxidative losses during extraction/concentration procedures and non-reproducible chromatographic performance.

QUALITY ENVIRONMENTAL SOLUTIONS & TECHNOLOGIES, INC. 24E0213

BULK SAMPLE FORM

York Analytical Laboratories, Inc.
120 Research Drive
Stratford, CT 06615
ph. (203) 325-1371
fax. (203) 357-0166

Field Chain-of-Custody Record

Rec'd Chain C 5-3-24 11:15
Rel Chain C 5-3-24 1409

Company: **QuES&T**

1376 Route 9

Wappinger Falls, NY 12590

Collected By (Print): **Shannon D. Talsma**

Collected By (Sign.): Shannon D. Talsma

Results Send Via: lab@qualityenv.com

Invoice to: **Angela Holzapfel**

Project ID: CPL: Pleasantville UFSD

Project #: 24-5999

SAMPLE #	LOCATION	SAMPLE DATE	MATRIX	ANALYSIS REQUESTED	CONTAINER
5999-PCB-01	Bypass Building, Exterior, Door, Frame, Metal to Brick and Mortar	5/2/2024	Caulk (Gray)	PCB	4 OZ Jar
5999-PCB-02	Bypass Building, Exterior, Window, Frame, Metal to Brick and Mortar	5/3/2024	Caulk (Black)	PCB	4 OZ Jar
5999-PCB-03	Grit Building, Exterior, Door, Frame, Metal to Cementitious Block and Mortar	5/4/2024	Caulk (Gray)	PCB	4 OZ Jar
5999-PCB-04	Grit Building, Exterior, Window, Frame, Metal to Cementitious Block and Mortar	5/5/2024	Caulk (Brown)	PCB	4 OZ Jar

ANALYSIS TURNAROUND: Standard 1-Week TAT

PAGE 1 OF 1

R 5/3/24 14:05 13.7°C

QUALITY ENVIRONMENTAL SOLUTIONS & TECHNOLOGIES, INC.

BULK SAMPLE FORM

York Analytical Laboratories, Inc.
120 Research Drive
Stratford, CT 06615
ph. (203) 325-1371
fax. (203) 357-0166

Field Chain-of-Custody Record

Company: **QuES&T**

1376 Route 9

Wappinger Falls, NY 12590

Collected By (Print): **Shannon D. Talsma**

Collected By (Sign.):

Results Send Via: lab@qualityenv.com

Invoice to: **Angela Holzapfel**

Project ID: Town of New Windsor

Project #: 24-5999

SAMPLE #	LOCATION	SAMPLE DATE	MATRIX	ANALYSIS REQUESTED	CONTAINER
5999-PCB-01	Bypass Building, Exterior, Door, Frame, Metal to Brick and Mortar	5/2/2024	Caulk (Gray)	PCB	4 OZ Jar
5999-PCB-02	Bypass Building, Exterior, Window, Frame, Metal to Brick and Mortar	5/2/2024	Caulk (Black)	PCB	4 OZ Jar
5999-PCB-03	Grit Building, Exterior, Door, Frame, Metal to Cementitious Block and Mortar	5/2/2024	Caulk (Gray)	PCB	4 OZ Jar
5999-PCB-04	Grit Building, Exterior, Window, Frame, Metal to Cementitious Block and Mortar	5/2/2024	Caulk (Brown)	PCB	4 OZ Jar

ANALYSIS TURNAROUND: Standard 1-Week TAT

PAGE__1__OF__1__

QuES&T
Quality Environmental Solutions & Technologies, Inc.

Appendix E:
PERSONNEL LICENSES & CERTIFICATIONS

NEW YORK STATE DEPARTMENT OF HEALTH
WADSWORTH CENTER

Expires 12:01 AM April 01, 2025
Issued April 01, 2024

CERTIFICATE OF APPROVAL FOR LABORATORY SERVICE

Issued in accordance with and pursuant to section 502 Public Health Law of New York State

MR. PAUL STASCAVAGE
EAS INC - EASTERN ANALYTICAL SERVICES INC
4 WESTCHESTER PLAZA
ELMSFORD, NY 105231610

NY Lab Id No: 10851

Is hereby APPROVED as an Environmental Laboratory for the category
ENVIRONMENTAL ANALYSES SOLID AND HAZARDOUS WASTE
All approved subcategories and/or analytes are listed below:

Miscellaneous

Asbestos in Friable Material	Item 198.1 of Manual
	EPA 600/M4/82/020
Asbestos in Non-Friable Material-PLM	Item 198.6 of Manual (NOB by PLM)
Asbestos in Non-Friable Material-TEM	Item 198.4 of Manual
Asbestos-Vermiculite-Containing Mate	Item 198.6 of Manual
Lead in Dust Wipes	EPA 7000B
Lead in Paint	EPA 7000B

Sample Preparation Methods

	EPA 3050B

Serial No.: 68589

Property of the New York State Department of Health. Certificates are valid only at the address shown and must be conspicuously posted by the laboratory. Continued accreditation depends on the laboratory's successful ongoing participation in the Program. Consumers may verify a laboratory's accreditation status online at https://apps.health.ny.gov/pubdch/applinks/wc/elappublicweb/, by phone (518) 485-5570 or by email to elap@health.ny.gov.

NEW YORK STATE DEPARTMENT OF HEALTH
WADSWORTH CENTER

Expires 12:01 AM April 01, 2025
Issued April 01, 2024

CERTIFICATE OF APPROVAL FOR LABORATORY SERVICE

Issued in accordance with and pursuant to section 502 Public Health Law of New York State

MS. CATHERINE L. MOSHER
YORK ANALYTICAL LABORATORIES INC
120 RESEARCH DRIVE
STRATFORD, CT 06615

NY Lab Id No: 10854

is hereby APPROVED as an Environmental Laboratory in conformance with the National Environmental Laboratory Accreditation Conference Standards (2016) for the category ENVIRONMENTAL ANALYSES SOLID AND HAZARDOUS WASTE
All approved analytes are listed below:

Phthalate Esters

Bis(2-ethylhexyl) phthalate	EPA 8270D
	EPA 8270E
Diethyl phthalate	EPA 8270D
	EPA 8270E
Dimethyl phthalate	EPA 8270D
	EPA 8270E
Di-n-butyl phthalate	EPA 8270D
	EPA 8270E
Di-n-octyl phthalate	EPA 8270D
	EPA 8270E

Polychlorinated Biphenyls

Aroclor 1016 (PCB-1016)	EPA 8082A
Aroclor 1016 (PCB-1016) in Oil	EPA 8082A
Aroclor 1221 (PCB-1221)	EPA 8082A
Aroclor 1221 (PCB-1221) in Oil	EPA 8082A
Aroclor 1232 (PCB-1232)	EPA 8082A
Aroclor 1232 (PCB-1232) in Oil	EPA 8082A
Aroclor 1242 (PCB-1242)	EPA 8082A
Aroclor 1242 (PCB-1242) in Oil	EPA 8082A
Aroclor 1248 (PCB-1248)	EPA 8082A
Aroclor 1248 (PCB-1248) in Oil	EPA 8082A
Aroclor 1254 (PCB-1254)	EPA 8082A
Aroclor 1254 (PCB-1254) in Oil	EPA 8082A
Aroclor 1260 (PCB-1260)	EPA 8082A
Aroclor 1260 (PCB-1260) in Oil	EPA 8082A
Aroclor 1262 (PCB-1262)	EPA 8082A
Aroclor 1262 (PCB-1262) in Oil	EPA 8082A

Serial No.: 68595

Property of the New York State Department of Health. Certificates are valid only at the address shown and must be conspicuously posted by the laboratory. Continued accreditation depends on the laboratory's successful ongoing participation in the Program. Consumers may verify a laboratory's accreditation status online at https://apps.health.ny.gov/pubdoh/applinks/wc/elappublicweb/, by phone (518) 485-5570 or by email to elap@health.ny.gov.

NEW YORK STATE DEPARTMENT OF HEALTH
WADSWORTH CENTER

Expires 12:01 AM April 01, 2025
Issued April 01, 2024

CERTIFICATE OF APPROVAL FOR LABORATORY SERVICE

Issued in accordance with and pursuant to section 502 Public Health Law of New York State

MS. CATHERINE L. MOSHER
YORK ANALYTICAL LABORATORIES INC
120 RESEARCH DRIVE
STRATFORD, CT 06615

NY Lab Id No: 10854

is hereby APPROVED as an Environmental Laboratory in conformance with the National Environmental Laboratory Accreditation Conference Standards (2016) for the category ENVIRONMENTAL ANALYSES SOLID AND HAZARDOUS WASTE
All approved analytes are listed below:

Polychlorinated Biphenyls

Aroclor 1268 (PCB-1268)	EPA 8082A
Aroclor 1268 (PCB-1268) in Oil	EPA 8082A

Polynuclear Aromatic Hydrocarbons

Acenaphthene	EPA 8270D
	EPA 8270E
Acenaphthylene	EPA 8270D
	EPA 8270E
Anthracene	EPA 8270D
	EPA 8270E
Benzo(a)anthracene	EPA 8270D
	EPA 8270E
Benzo(a)pyrene	EPA 8270D
	EPA 8270E
Benzo(b)fluoranthene	EPA 8270D
	EPA 8270E
Benzo(g,h,i)perylene	EPA 8270D
	EPA 8270E
Benzo(k)fluoranthene	EPA 8270D
	EPA 8270E
Dibenzo(a,h)anthracene	EPA 8270D
	EPA 8270E
Fluoranthene	EPA 8270D
	EPA 8270E
Fluorene	EPA 8270D
	EPA 8270E
Indeno(1,2,3-cd)pyrene	EPA 8270D
	EPA 8270E

Serial No.: 68595

Property of the New York State Department of Health. Certificates are valid only at the address shown and must be conspicuously posted by the laboratory. Continued accreditation depends on the laboratory's successful ongoing participation in the Program. Consumers may verify a laboratory's accreditation status online at https://apps.health.ny.gov/pubdoh/applinks/wc/elappublicweb/, by phone (518) 485-5570 or by email to elap@health.ny.gov.

WE ARE YOUR DOL

NEW YORK STATE | Department of Labor

DIVISION OF SAFETY & HEALTH LICENSE AND CERTIFICATE UNIT, STATE OFFICE CAMPUS, BLDG. 12, ALBANY, NY 12226

ASBESTOS HANDLING LICENSE

Quality Environmental Solutions & Technologies, Inc.
1376 Route 9, Wappinger Falls, NY, 12590

License Number: 29085
License Class: RESTRICTED
Date of Issue: 12/29/2023
Expiration Date: 01/31/2025
Duly Authorized Representative: Lawrence J Holzapfel

This license has been issued in accordance with applicable provisions of Article 30 of the Labor Law of New York State and of the New York State Codes, Rules and Regulations (12 NYCRR Part 56). It is subject to suspension or revocation for a (1) serious violation of state, federal or local laws with regard to the conduct of an asbestos project, or (2) demonstrated lack of responsibility in the conduct of any job involving asbestos or asbestos material.

This license is valid only for the contractor named above and this license or a photocopy must be prominently displayed at the asbestos project worksite. This license verifies that all persons employed by the licensee on an asbestos project in New York State have been issued an Asbestos Certificate, appropriate for the type of work they perform, by the New York State Department of Labor.

Amy Phillips, Director
For the Commissioner of Labor

United States Environmental Protection Agency

This is to certify that

Quality Environmental Solutions & Technologies, Inc.

has fulfilled the requirements of the Toxic Substances Control Act (TSCA) Section 402, and has received certification to conduct lead-based paint activities pursuant to 40 CFR Part 745.226

In the Jurisdiction of:

All EPA Administered Lead-based Paint Activities Program States, Tribes and Territories

This certification is valid from the date of issuance and expires November 09, 2024

LBP-119213-2

Certification #

November 09, 2021

Issued On

Michelle Price, Chief

Lead, Heavy Metals, and Inorganics Branch

United States Environmental Protection Agency

This is to certify that

Quality Environmental Solutions & Technologies, Inc.

has fulfilled the requirements of the Toxic Substances Control Act (TSCA) Section 402, and has received certification to conduct lead-based paint renovation, repair, and painting activities pursuant to 40 CFR Part 745.89

In the Jurisdiction of:

All EPA Administered States, Tribes, and Territories

This certification is valid from the date of issuance and expires December 01, 2026

NAT-119213-3

Certification #

November 09, 2021

Issued On

Michelle Price, Chief

Lead, Heavy Metals, and Inorganics Branch

NEW YORK STATE

MINORITY- AND WOMEN-OWNED BUSINESS ENTERPRISE ("MWBE")

CERTIFICATION

Empire State Development's Division of Minority and Women's Business Development grants a

Minority Business Enterprise (MBE)

pursuant to New York State Executive Law, Article 15-A to:

Quality Environmental Solutions & Technologies Inc. DBA QuEST

Certification Awarded on: May 13, 2024
Expiration Date: May 13, 2029
File ID#: 49952

NEW YORK STATE OF OPPORTUNITY. Division of Minority and Women's Business Development

A Division of Empire State Development

STATE OF NEW YORK - DEPARTMENT OF LABOR
ASBESTOS CERTIFICATE

N.Y.S



SHANNON D TALSMA
CLASS(EXPIRES)
C ATEC (10/24) D INSP (10/24)
H PM (10/24)

CERT# 23-61PEC-SHAB
DMV# 963348232

MUST BE CARRIED ON ASBESTOS PROJECTS

IF FOUND, RETURN TO:
NYSDOL - L&C UNIT
ROOM 161A BUILDING 12
STATE OFFICE CAMPUS
ALBANY NY 12226

01213 007013281 61

OSHA
Occupational Safety and Health Administration

12-006010504

This card acknowledges that the participant has successfully completed

10-hour Construction Safety and Health

This card issued to:

Shannon D. Talsma

David Veit — Trainer Name

04/22/2016 — Date of Issue

Atlantic OSHA Training Center
OSHA Training Institute Education Center

732.235.9450
aotc.sph.rutgers.edu

OSHA recommends Outreach Training Courses as an orientation to occupational safety and health for workers. Participation is voluntary. Workers must receive additional training on specific hazards of their job. This course completion card does not expire

Use or distribution of this card for fraudulent purposes, including false claims of having received training, may result in prosecution under 18 U.S.C. 1001. Potential penalties include substantial criminal fines, imprisonment up to 5 years, or both.

To verify this training scan the QR code with your mobile device.

Rev 1/2016

STATE OF NEW YORK - DEPARTMENT OF LABOR
ASBESTOS CERTIFICATE

N.Y.S



ZACHARY TIMPANO
CLASS(EXPIRES)
C ATEC (11/24) D INSP (11/24)
H PM (11/24)

CERT# 23-61PEY-SHAB
DMV# 131470793

MUST BE CARRIED ON ASBESTOS PROJECTS

01213 007013279 08

IF FOUND, RETURN TO:
NYSDOL - L&C UNIT
ROOM 161A BUILDING 12
STATE OFFICE CAMPUS
ALBANY NY 12226

United States Environmental Protection Agency

This is to certify that



Zachary P Timpano

has fulfilled the requirements of the Toxic Substances Control Act (TSCA) Section 402, and has received certification to conduct lead-based paint activities pursuant to 40 CFR Part 745.226 as:

Risk Assessor

In the Jurisdiction of:

All EPA Administered Lead-based Paint Activities Program States, Tribes and Territories

This certification is valid from the date of issuance and expires August 29, 2026

LBP-R-I252793-1

Certification #

August 15, 2023

Issued On

Ben Conetta, Chief

Chemicals and Multimedia Programs Branch

United States Environmental Protection Agency

This is to certify that



Zachary P Timpano

has fulfilled the requirements of the Toxic Substances Control Act (TSCA) Section 402, and has received certification to conduct lead-based paint activities pursuant to 40 CFR Part 745.226 as:

Inspector

In the Jurisdiction of:

All EPA Administered Lead-based Paint Activities Program States, Tribes and Territories

This certification is valid from the date of issuance and expires October 06, 2026

LBP-I-I252793-1

Certification #

September 22, 2023

Issued On

Ben Conetta, Chief

Chemicals and Multimedia Programs Branch

OSHA
Occupational Safety and Health Administration

11-602012363

This card acknowledges that the recipient has successfully completed:

30-hour Construction Safety and Health

This card issued to:

Zachary Timpano

Paul Rodriguez	9/28/2018
Trainer Name	Date of Issue

OSHA Training Institute Education Centers
Keene State College

800-449-6742
outreach.keeneosha.com

OSHA recommends Outreach Training Courses as an orientation to occupational safety and health for workers. Participation is voluntary. Workers must receive additional training on specific hazards of their job. This course completion card does not expire.

Use or distribution of this card for fraudulent purposes, including false claims of having received training, may result in prosecution under 18 U.S.C. 1001. Potential penalties include substantial criminal fines, imprisonment up to 5 years, or both.

To verify this training, scan the QR code with your mobile device.

Rev. 1/2016

QuES&T
Quality Environmental Solutions & Technologies, Inc.

PRE-DEMOLITION/PRE-RENOVATION INSPECTION FOR ASBESTOS-CONTAINING MATERIALS (ACM)

for

TOWN OF NEW WINDSOR
555 Union Ave
New Windsor, New York 12553

at

NEW WINDSOR WASTE WATER TREATMENT PLANT
Control Building & Microscreen Building
145 Caesar's Lane
New Windsor, New York 12553

May 28, 2019 Revision

Project #Q19-2382

1376 Route 9, Wappingers Falls, NY 12590 Phone (845) 298-6031 Fax (845) 298-6251
NYS MWBD MBE Cert # 49952-2006 NYSUCP DBE Certified NJUCP DBE Certified www.Qualityenv.com

QuES&T

Quality Environmental Solutions & Technologies, Inc.

May 28, 2019

Town of New Windsor
555 Union Ave
New Windsor, New York 12553

ATTN: John Eggito

Via Email: **nwwater@hvc.rr.com**

Re.: 145 Caesar's Lane, New Windsor, New York 12553
Waste Water Treatment Plant: Control Building & Microscreen Building
Pre-Demolition/Pre-Renovation Asbestos Inspection
QuES&T Project #Q19-2382

Dear Mr. Eggito,

Attached is the Pre-Demolition/Pre-Renovation Inspection Report for Asbestos-containing Materials (ACM) conducted throughout the interiors and exteriors of the above-referenced location(s) by **Qu**ality **E**nvironmental **S**olutions **& T**echnologies, Inc. **(QuES&T)**. The inspection included visual assessment and representative sampling for the detection of ACM in compliance with the requirements of Title 12 NYCRR Part 56-5.1.

The attached report summarizes the inspection protocol and inspection results for your review. **QuES&T** believes this report accurately reflects the material condition existing in the functional spaces at the time of our inspection.

Should you wish to discuss this matter further or require additional information concerning this submittal, please contact us at (845) 298-6031. **QuES&T** appreciates the opportunity to assist Town of New Windsor in the environmental services area.

Sincerely,

James Klemm
Field & Technical Services
NYS/AHERA Inspector
Cert. #13-11486

Cc: aperre@qualityenv.com
QuES&T File

QuES&T

Quality Environmental Solutions & Technologies, Inc.

Table of Contents

I. Introduction **Page 1**

II. Inspection Summary **Page 2**

III. Identified Asbestos-containing Materials (ACM) **Page 3**

IV. General Discussion **Page 4**

V. Transmittal of Building Survey Information **Page 5**

VI. Abatement Required **Page 6**

VII. Disclaimers **Page 7**

Appendix A: ACM Location Drawings & Photos

Appendix B: Sample Locations & Sample Results

Appendix C: Personnel Licenses & Certifications

I. INTRODUCTION:

Quality **E**nvironmental **S**olutions **& T**echnologies, Inc. **(QuES&T)** performed an Asbestos Survey for Building/Structure Demolition, Renovation, Remodeling and Repair, in conformance with Title 12 NYCRR Part 56-5.1, on March 25 & May 15, 2019 for the Town of New Windsor at the Control Building and Microscreen Building of the Town of New Windsor Waste Water Treatment Plant, located at 145 Caesar's Lane, New Windsor, New York 12553. The survey included a visual inspection/assessment for PACM and suspect miscellaneous ACM throughout accessible interior and/or exterior spaces of the building/structure or portion thereof identified to be demolished, renovated, remodeled or repaired. Inspection/assessment of installed roofing material(s) was included within this inspection.

QuES&T established functional spaces based either on physical barriers (i.e. walls, doors, etc.) or homogeneity of material. Within each functional space identified, a visual inspection was performed using reasonable care and judgment, to identify and assess location, quantity, friability and condition of all accessible installed ACM building materials observed at the affected portion of the building/structure.

Limited localized demolition of building surfaces was performed, as part of this survey, to access concealed surfaces. No disassembly of installed equipment was conducted as part of this inspection. ACM concealed within structural components and equipment interiors or that is accessible only through extensive mechanical or structural demolition may not have been identified as part of this survey. When any construction activity, such as demolition, remodeling, renovation or repair work, reveals PACM or suspect miscellaneous ACM that has not been identified, as part of this survey, all construction activities shall cease in the affected area.

The survey included both visual inspection of accessible spaces and representative sampling of suspect building materials for ACM. Samples collected were analyzed by a laboratory approved under the New York State Department of Health Environmental Laboratory Approval Program (NYSDOH ELAP). Samples were analyzed in the laboratory by Polarized Light Microscopy (PLM), Polarized Light Microscopy-NOB (PLM-NOB) and/or Quantitative Transmission Electron Microscopy (QTEM), as required. Sample collection and laboratory analysis were conducted in compliance with the requirements of Title 12 NYCRR Part 56-5.1, 29 CFR 1926.1101 and standard EPA & OSHA accepted methods. Samples consisting of multiple layers were separated and analyzed independently in the laboratory.

Certified **QuES&T** personnel (Appendix C), Mr. James Klemm (Cert. #AH 13-11486), Mr. Shannon D. Talsma (Cert. #AH 16-07559), performed visual assessments throughout interior and exterior locations identified. A total of one-hundred thirty **(130)** samples/layers of installed and accessible suspect building materials were analyzed by a laboratory approved under the NYSDOH ELAP. Fifty-six (56) samples/layers were analyzed using Polarized Light Microscopy (PLM) for friable materials; thirty-nine (39) samples/layers were analyzed using Polarized Light Microscopy (PLM-NOB) for non-friable organically bound materials; and, thirty-five (35) samples/layers were analyzed by Confirmatory-QTEM following negative-determinations using PLM-NOB protocols.

II. INSPECTION SUMMARY:

A visual inspection was performed and homogenous material types were established based on appearance, color and texture. The findings presented in this report are based upon reasonably available information and observed site conditions at the time the assessment was performed. The findings and conclusions of this report are not meant to be indicative of future conditions at the site and does not warrant against conditions that were not evident from visual observations or historical information obtained from others.

Representative bulk sampling was performed on suspect building materials for laboratory analysis using PLM, PLM-NOB and QTEM. The following is a summary of installed building materials sampled:

- Ceiling Materials – Ceiling Tile.
- Wall Materials – Sheetrock, Joint Compound, Cementitious Block & Morat, Brick & Mortar.
- Flooring Materials – Quarry Tile System (i.e. grout, mudset, etc.), Ceramic Tile System (i.e. grouts, mudsets, etc.), Cementitious Slab
- Roofing Materials – Rolled Roofing, Tar/Vapor Barrier, Vapor Barrier, Perlite, EPDM, Isofoam, Shingle, Gypsum.
- Thermal System Insulation (TSI) – Pipe Insulation
- Miscellaneous Materials – Caulks, Glazings (multiple varieties).

III. IDENTIFIED ASBESTOS-CONTAINING MATERIALS (ACM):
(please see attached drawings for approx. ACM locations)

KEY: **ACM** = Materials containing greater than 1% of asbestos;
LF = Linear Feet; **SF** = Square Feet; **PACM** = Presumed Asbestos-containing Materials;
Friable = ACM capable of being released into air, and which can be crumbled, pulverized, powdered, crushed or exposed by hand-pressure.

Location	Material	Approx. Qty.	Friable?	Condition
CONTROL BUILDING – PRE-RENOVATION				
Interiors				
Walls, Throughout	Sheetrock with ACM Joint Compound	See Below	Yes	Good
Break Room		500 SF		
Men's Bathroom		400 SF		
Women's Bathrooms		300 SF		
Locker Rooms		450 SF		
Maintenance Room		350 SF		
Entrance Vestibule		750 SF		
Control Room		700 SF		
Laboratory		450 SF		
Reception		600 SF		
Exteriors				
Main Roof, Equipment Flashing	Flashing Tar	32 SF	No	Good
Front Entrance, Door & Window System, Metal to Brick	Caulk	60 LF	No	Good
MICROSCREEN BUILDING – PRE-DEMOLITION				
Interiors				
****No Asbestos-containing Materials (ACM) identified upon PLM & QTEM/PLM-NOB analysis.****				
Exteriors				
Roof, Field, Second Layer	Vapor Barrier	600 SF	No	Good
Roof, Perimeter Flashing, Bottom Layer, on Metal	Vapor Barrier	100 SF	No	Good

IV. GENERAL DISCUSSION:

All construction personnel as well as individuals who have access to locations where asbestos containing materials (ACM) exists should be informed of its presence and the proper work practices in these areas. Conspicuous labeling of all ACM is suggested to ensure personnel is adequately informed. Personnel should be informed not to rest, lean or store material or equipment on or near these surfaces and not to cut, saw, drill, sand or disturb ACM. All removal, disturbance, and repair of ACM should be performed in compliance with Title 12 NYCRR Part 56 by persons properly trained to handle ACM. Facility custodial and maintenance personnel should receive training commensurate with their work activities; as defined in 29 CFR 1910.1001.

The findings presented in this report are based upon reasonably available information and observed site conditions at the time the assessment was performed. Conditions may have changed since that time and the findings and conclusions of this report are not meant to be indicative of future conditions at the Site. This report does not warrant against conditions that were not evident from visual observations or historical information obtained, or conditions that could only be determined by physical sampling or other intrusive investigation techniques that are outside the proposed scope of work.

V. TRANSMITTAL OF BUILDING SURVEY INFORMATION:

As specified in Title 12 NYCRR Part 56-5.1 (g), information derived from this building survey shall be immediately transmitted by the building owner or his/her agent to the commissioner through the Department's Division of Safety and Health, Asbestos Control Bureau, and to the local government entity charged with issuing a permit for such demolition under applicable State or local laws or, if no such permit is required, to the town or city clerk where the building is located.

VI. ABATEMENT REQUIRED:

As specified in Title 12 NYCRR Part 56-5.1 (h) and (i), "If the building/structure asbestos survey finds that the portion of the building/structure to be demolished, renovated, remodeled, or have repair work contains ACM, PACM, suspect miscellaneous ACM assumed to be ACM, or asbestos material, which is impacted by the work, the owner or the owner's agent shall conduct, or cause to have conducted, asbestos removal performed by a licensed asbestos abatement contractor in conformance with all standards set forth in this Part. All ACM, PACM, suspect miscellaneous ACM assumed to be ACM, or asbestos material impacted by the demolition, renovation, remodeling or repair project shall be removed as per this Part, prior to access or disturbance by other uncertified trades or personnel. No demolition, renovation, remodeling or repair work shall be commenced by any owner or the owner's agent prior to the completion of the asbestos abatement in accordance with the notification requirements of this Part…All building/structure owners and asbestos abatement contractors on a demolition, renovation, remodeling, or repair project, which includes work covered by this part, shall inform all trades on the work site about PACM, ACM, asbestos material and suspect miscellaneous ACM…Bids may be advertised and contracts awarded for demolition, remodeling, renovation, or repair work, but no work on the current intermediate portion of the project shall commence on the demolition, renovation, remodeling or repair work by any owner or agent prior to completion of all necessary asbestos abatement work for the current intermediate portion of the entire project, in conformance with all standards set forth in this Part."

Prior to conducting demolition or construction work at the building, all ACM affected/impacted by such activities shall be removed utilizing a licensed asbestos abatement contractor and NYSDOL/EPA/NYC certified personnel prior to construction/demolition activities. All work conducted should be in accordance with all legal requirements, including but not limited to U.S. Environmental Protection Agency (EPA) National Emissions Standards for Hazardous Air Pollutants (NESHAP) [40 CFR Part 61], New York State Industrial Code Rule 56 Asbestos Regulations (ICR 56) and Chapter 1 of Title 15 of the Rules of the City of New York Regulations, as applicable. Advance notification of the asbestos project to the USEPA, NYSDOL, and NYCDEP may be required.

All suspect building materials not sampled during this survey should be considered ACM until these materials are sampled and analyzed for ACM in the laboratory. Concealed ACM: In addition to the ACMs identified at the site, there is a possibility that concealed ACM may exist at the subject facility. As such, if any concealed suspect ACM is encountered during future construction related activities, the work should immediately stop. Prior to resuming the work, the suspect ACM should either be 1) Sampled by an appropriately-certified asbestos professional and submitted to an Approved NYSDOH ELAP laboratory for asbestos analysis or 2) Presumed to be ACM (PACM) and removed by a licensed asbestos abatement contractor for disposal in accordance with all applicable regulations.

VII. DISCLAIMERS

It should be noted that the information contained within this report is based solely upon site observations and the results of laboratory analysis for samples collected by **QuES&T.** These observations and results are time dependent, subject to changing site conditions and revisions to Federal, State and Local regulations. **QuES&T** warrants that these findings have been promulgated after being prepared in general accordance with generally accepted practices in the abatement industries. **QuES&T** also recognizes that inspection laboratory data is not usually sufficient to make all abatement and management decisions.

Due to the potential for concealed Asbestos-containing Materials (ACM) or other regulated materials, this report should not be construed to represent all ACM or regulated materials within the site(s). All quantities of ACM or other regulated materials identified, and all dimensions listed within this report are approximate and should be verified On-site.

This inspection report is not intended to be used as the sole basis for soliciting pricing for asbestos abatement. An abatement plan, specification, drawing and/or Variances should be developed to identify scope, timing, phasing and remediation means & methods for any asbestos project. The Linear and/or Square Footages (LF / SF) listed within this Report are only approximates. Abatement Contractor(s) are required to visit the building(s) in order to take actual field measurements within each listed location.

Appendix A:
ACM LOCATION DRAWINGS & PHOTOS

Town of New Windsor - Waste Water Treatment Plant - Control Building

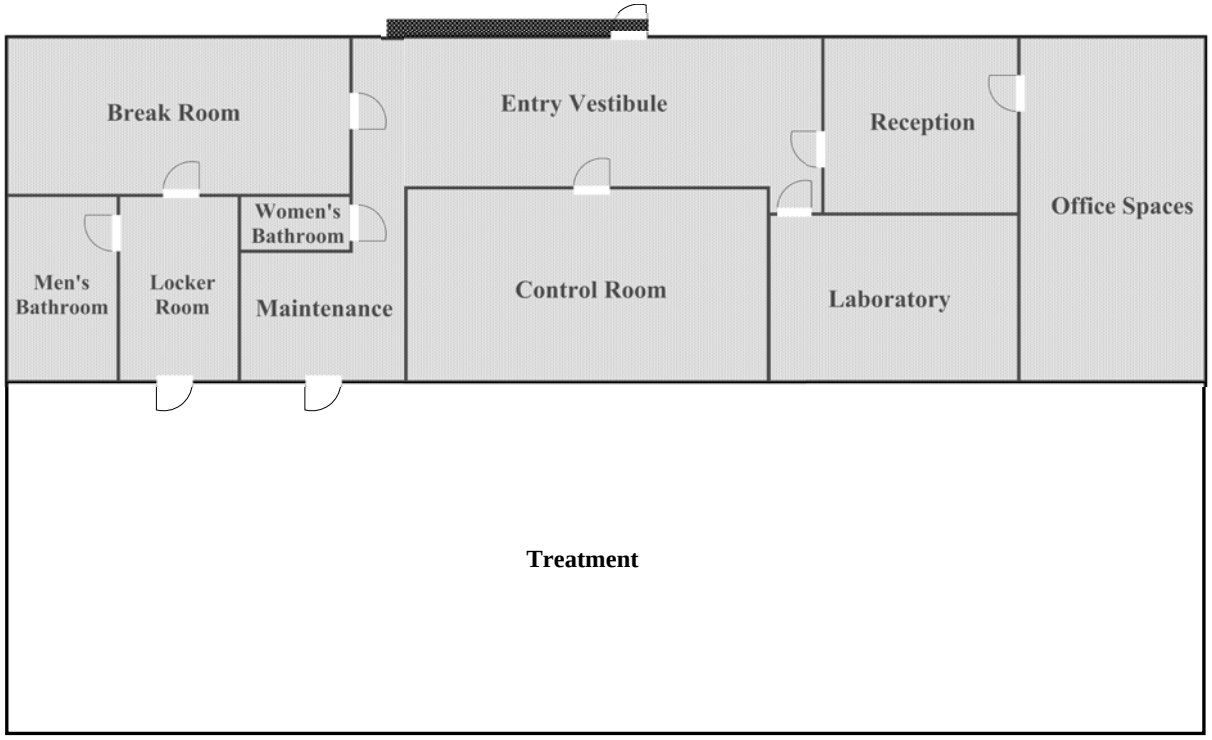

N

Building Key Plan - ACM Locations

Drawing Not to Scale

This Drawing is not intended to be used as the sole basis for soliciting pricing for asbestos abatement. An abatement plan, specification, drawing and/or variances should be developed to identify scope, timing, phasing and remediation means & methods for any asbestos project.

ACM LEGEND: (see report for details)	
	ACM Joint Compound on Non-ACM Sheetrock Walls
	ACM Caulk on Window/Door System from Non-ACM Brick to Metal Frame

Town of New Windsor
555 Union Ave
New Windsor, NY 12553

Waste Water Treatment Plant
Control Building
145 Caesar's Lane
New Windsor, New York 12553

QuES&T
Quality Environmental Solutions & Technologies, Inc.
1376 Route 9
Wappingers Falls, NY 12590
Phone: (845) 298 - 6031
Fax: (845) 298-6251

Date: 4-1-2019
Version # 1
Issued For: Asbestos Survey
Project NO: Q19-2382
Project Manager: Anthony Perre
Drawing Prepared By: James Klemm

ASB-01

Town of New Windsor - Waste Water Treatment Plant - Micro Screen Building

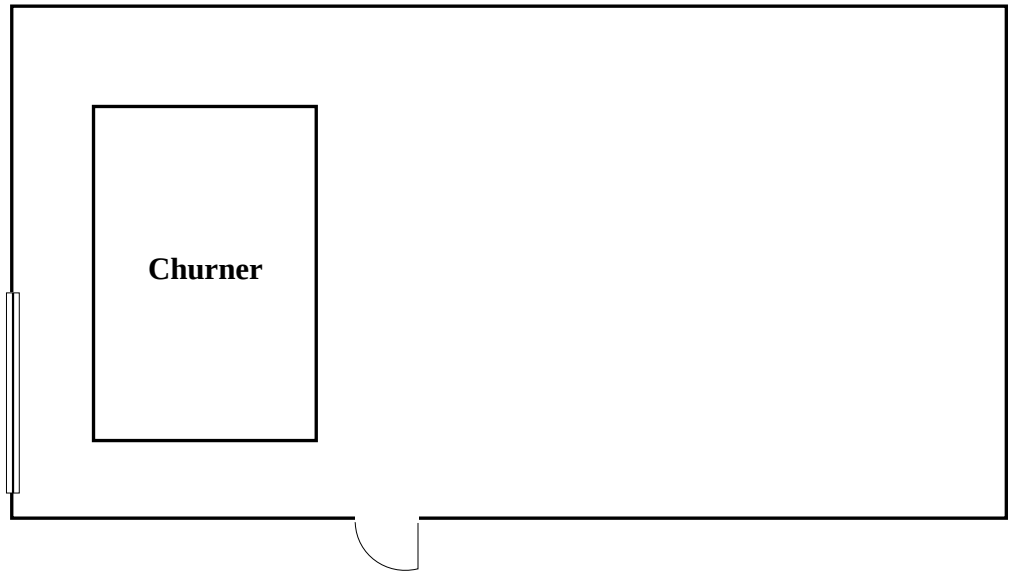

N

Room Key Plan - ACM Locations

Drawing Not to Scale

This Drawing is not intended to be used as the sole basis for soliciting pricing for asbestos abatement. An abatement plan, specification, drawing and/or variances should be developed to identify scope, timing, phasing and remediation means & methods for any asbestos project.

ACM LEGEND: (see report for details)	
NOTE	No Asbestos-containing Materials (ACM) identified upon PLM & QTEM/PLM analysis.

Town of New Windsor
555 Union Ave
New Windsor, NY 12553

Waste Water Treatment Plant
Micro Screen Building
145 Caesar's Lane
New Windsor, New York 12553

QuES&T
Quality Environmental Solutions & Technologies, Inc.
1376 Route 9
Wappingers Falls, NY 12590
Phone: (845) 298 - 6031
Fax: (845) 298-6251

Date: 4-1-2019
Version # 1
Issued For: Asbestos Survey
Project NO: Q19-2382
Project Manager: Anthony Perre
Drawing Prepared By: James Klemm

ASB-02

Town of New Windsor - Waste Water Treatment Plant - Micro Screen Building

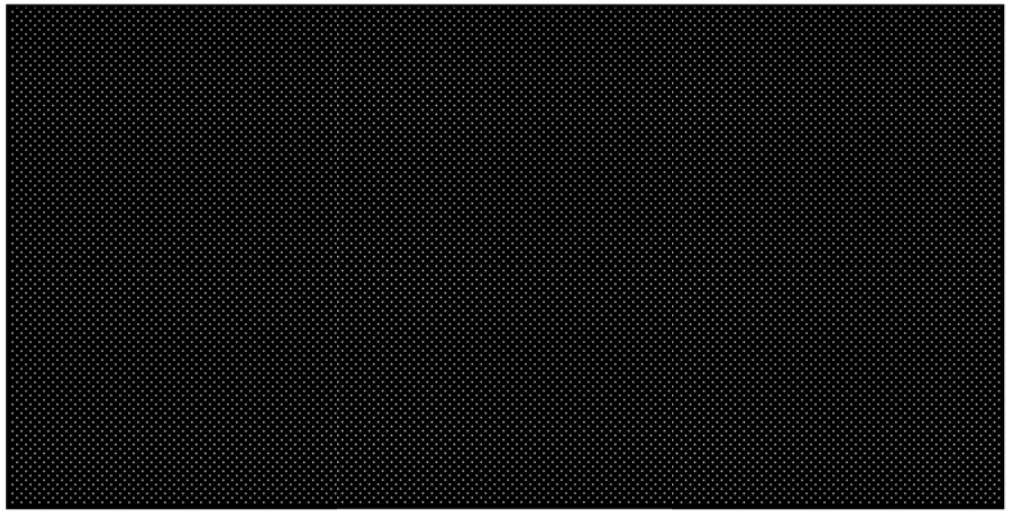

Roof Key Plan - ACM Locations

Drawing Not to Scale

This Drawing is not intended to be used as the sole basis for soliciting pricing for asbestos abatement. An abatement plan, specification, drawing and/or variances should be developed to identify scope, timing, phasing and remediation means & methods for any asbestos project.

ACM LEGEND: (see report for details)	
	ACM Tar Vapor Barrier on Roof Field and Perimeter Flashing.

Town of New Windsor
555 Union Ave
New Windsor, NY 12553

Waste Water Treatment Plant
Micro Screen Building
145 Caesar's Lane
New Windsor, New York 12553

QuES&T
Quality Environmental Solutions & Technologies, Inc.
1376 Route 9
Wappingers Falls, NY 12590
Phone: (845) 298 - 6031
Fax: (845) 298-6251

Date: 4-1-2019
Version # 1
Issued For: Asbestos Survey
Project NO: Q19-2382
Project Manager: Anthony Perre
Drawing Prepared By: James Klemm

ASB-03

Town of New Windsor - Waste Water Treatment Plant - Control Building

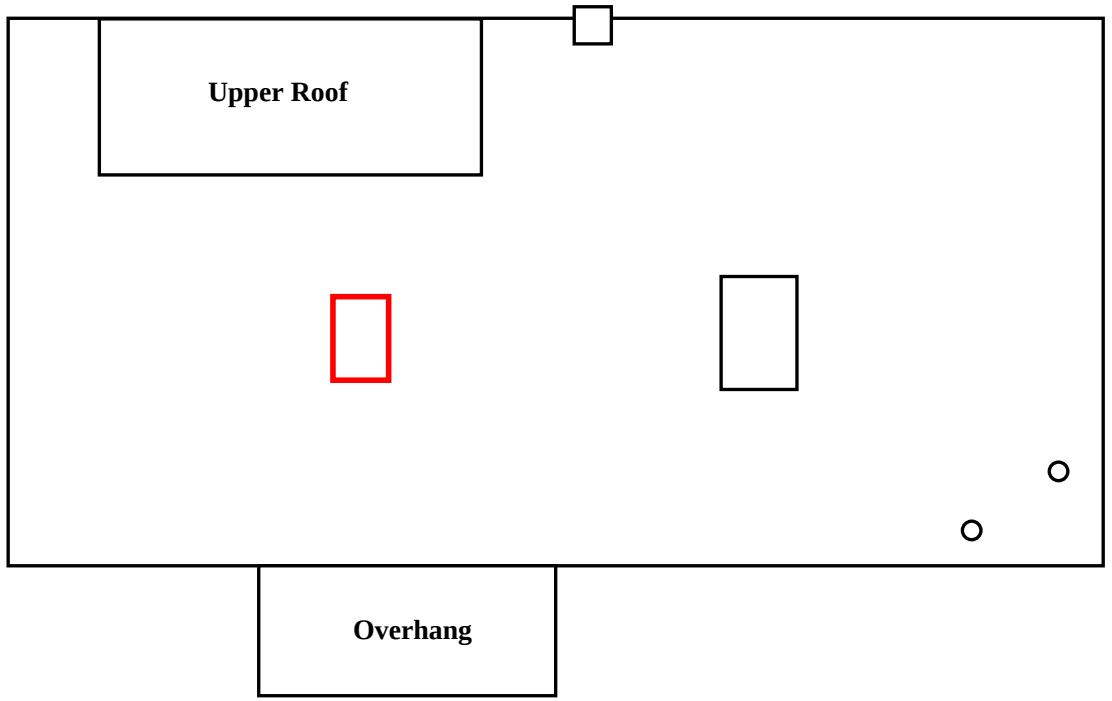

N

Roof Key Plan - ACM Locations

Drawing Not to Scale

This Drawing is not intended to be used as the sole basis for soliciting pricing for asbestos abatement. An abatement plan, specification, drawing and/or variances should be developed to identify scope, timing, phasing and remediation means & methods for any asbestos project.

ACM LEGEND: (see report for details)	
	ACM Flashing Tar

Town of New Windsor
555 Union Ave
New Windsor, NY 12553

Waste Water Treatment Plant
Control Building
145 Caesar's Lane
New Windsor, New York 12553

QuES&T
Quality Environmental Solutions & Technologies, Inc.
1376 Route 9
Wappingers Falls, NY 12590
Phone: (845) 298 - 6031
Fax: (845) 298-6251

Date: 5-28-2019
Version # 1
Issued For: Asbestos Survey
Project NO: Q19-2382
Project Manager: Anthony Perre
Drawing Prepared By: James Klemm

ASB-04

QuES&T

Quality Environmental Solutions & Technologies, Inc.

Control Building – Sheetrock with ACM Joint Compound







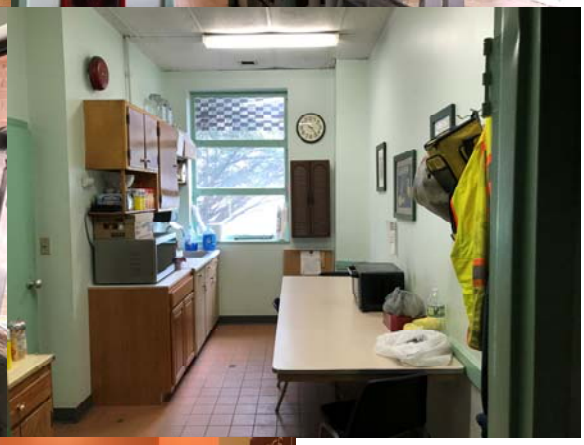

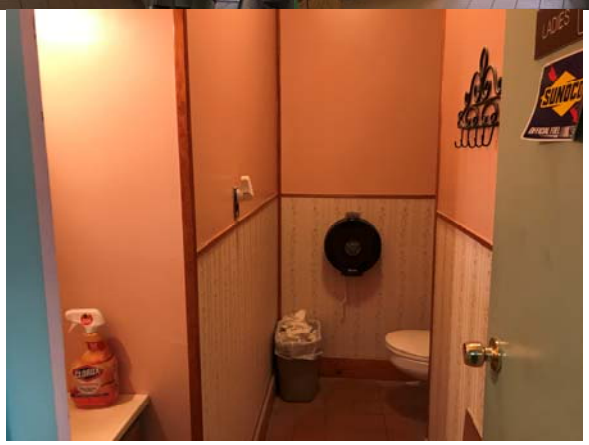

1376 Route 9, Wappingers Falls, NY 12590 Phone (845) 298-6031 Fax (845) 298-6251

NYS MWBD MBE Cert # 49952-2006 NYSUCP DBE Certified NJUCP DBE Certified www.Qualityenv.com

QuES&T
Quality Environmental Solutions & Technologies, Inc.

Control Building – ACM Caulk



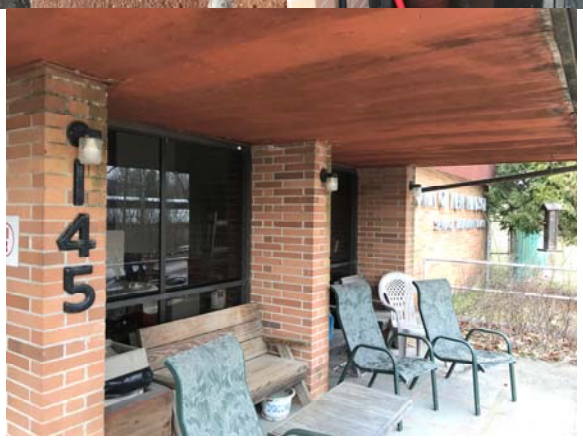

Control Building Roof – ACM Flashing Tar



1376 Route 9, Wappingers Falls, NY 12590 Phone (845) 298-6031 Fax (845) 298-6251
NYS MWBD MBE Cert # 49952-2006 NYSUCP DBE Certified NJUCP DBE Certified www.Qualityenv.com

QuES&T
Quality Environmental Solutions & Technologies, Inc.

Appendix B:
SAMPLE LOCATIONS & SAMPLE RESULTS

Town of New Windsor - Waste Water Treatment Plant - Control Building

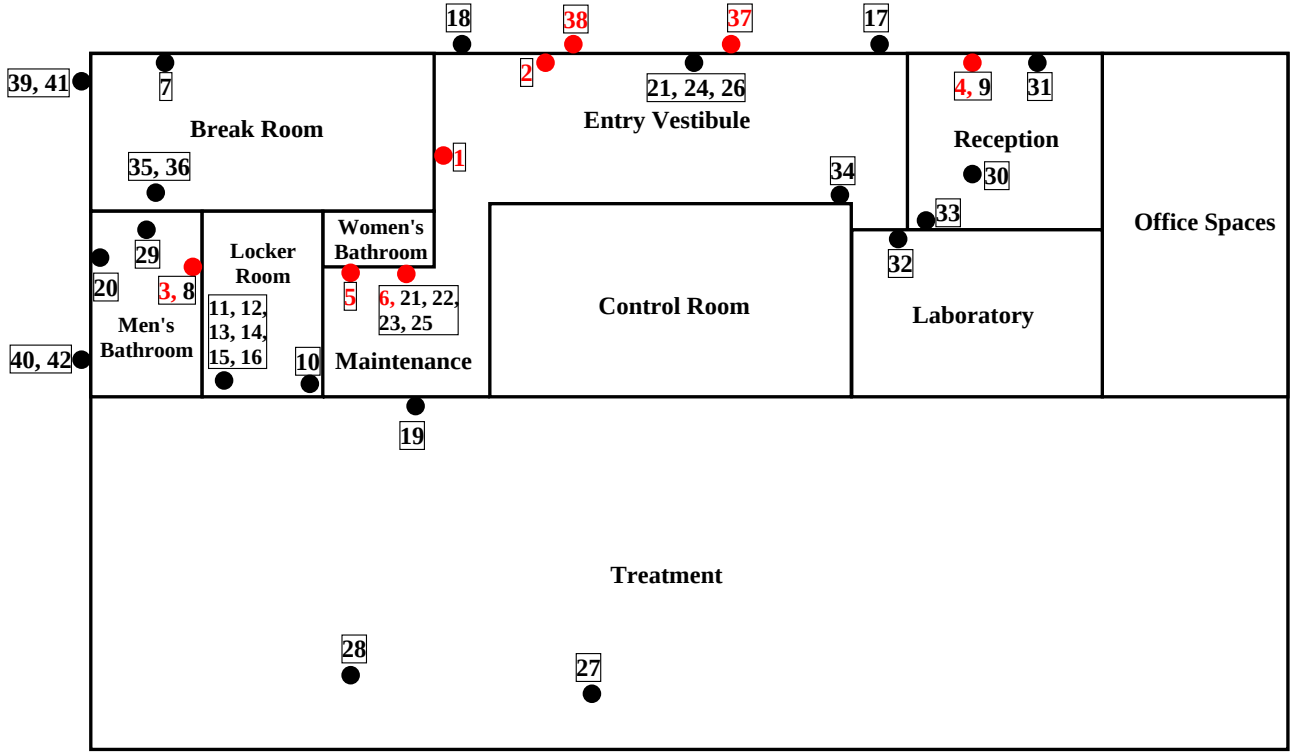

Sample Location Key Plan - ACM Locations

N

Drawing Not to Scale

This Drawing is not intended to be used as the sole basis for soliciting pricing for asbestos abatement. An abatement plan, specification, drawing and/or variances should be developed to identify scope, timing, phasing and remediation means & methods for any asbestos project.

SAMPLE LOCATION LEGEND	
●	Sample Location (Non-ACM)
●	Sample Location (ACM)

Town of New Windsor
555 Union Ave
New Windsor, NY 12553

Waste Water Treatment Plant
Control Building
145 Caesar's Lane
New Windsor, New York 12553

QuES&T
Quality Environmental Solutions & Technologies, Inc.
1376 Route 9
Wappingers Falls, NY 12590
Phone: (845) 298 - 6031
Fax: (845) 298-6251

Date: 4-1-2019
Version # 1
Issued For: Asbestos Survey
Project NO: Q19-2382
Project Manager: Anthony Perre
Drawing Prepared By: James Klemm

SL-01

Town of New Windsor - Waste Water Treatment Plant - Micro Screen Building

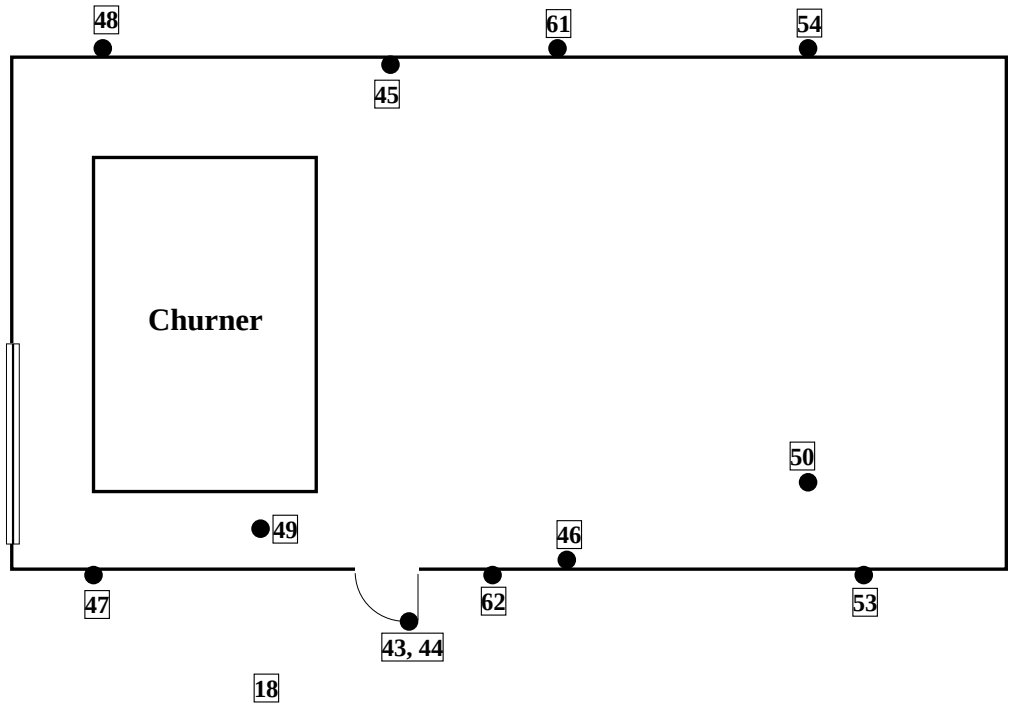

N

Sample Location Key Plan - ACM Locations

Drawing Not to Scale

This Drawing is not intended to be used as the sole basis for soliciting pricing for asbestos abatement. An abatement plan, specification, drawing and/or variances should be developed to identify scope, timing, phasing and remediation means & methods for any asbestos project.

SAMPLE LOCATION LEGEND	
●	Sample Location (Non-ACM)

Town of New Windsor
555 Union Ave
New Windsor, NY 12553

Waste Water Treatment Plant
Micro Screen Building
145 Caesar's Lane
New Windsor, New York 12553

QuES&T
Quality Environmental Solutions & Technologies, Inc.
1376 Route 9
Wappingers Falls, NY 12590
Phone: (845) 298 - 6031
Fax: (845) 298-6251

Date: 4-1-2019
Version # 1
Issued For: Asbestos Survey
Project NO: Q19-2382
Project Manager: Anthony Perre
Drawing Prepared By: James Klemm

SL-02

Town of New Windsor - Waste Water Treatment Plant - Micro Screen Building

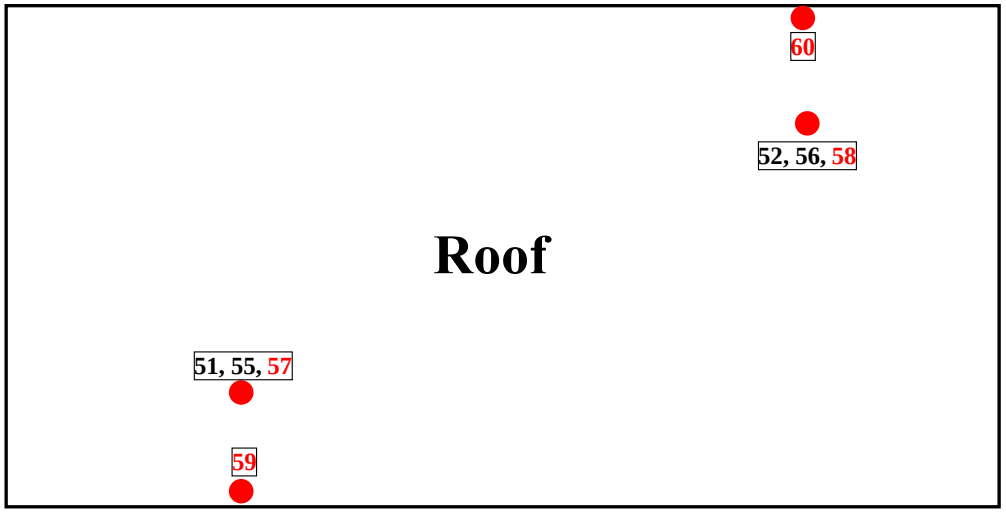

N

Sample Location Key Plan - ACM Locations

Drawing Not to Scale

This Drawing is not intended to be used as the sole basis for soliciting pricing for asbestos abatement. An abatement plan, specification, drawing and/or variances should be developed to identify scope, timing, phasing and remediation means & methods for any asbestos project.

SAMPLE LOCATION LEGEND	
●	Sample Location (Non-ACM)
●	Sample Location (ACM)

Town of New Windsor
555 Union Ave
New Windsor, NY 12553

Waste Water Treatment Plant
Micro Screen Building
145 Caesar's Lane
New Windsor, New York 12553

QuES&T
Quality Environmental Solutions & Technologies, Inc.
1376 Route 9
Wappingers Falls, NY 12590
Phone: (845) 298 - 6031
Fax: (845) 298-6251

Date: 4-1-2019
Version # 1
Issued For: Asbestos Survey
Project NO: Q19-2382
Project Manager: Anthony Perre
Drawing Prepared By: James Klemm

SL-03

Town of New Windsor - Waste Water Treatment Plant - Control Building

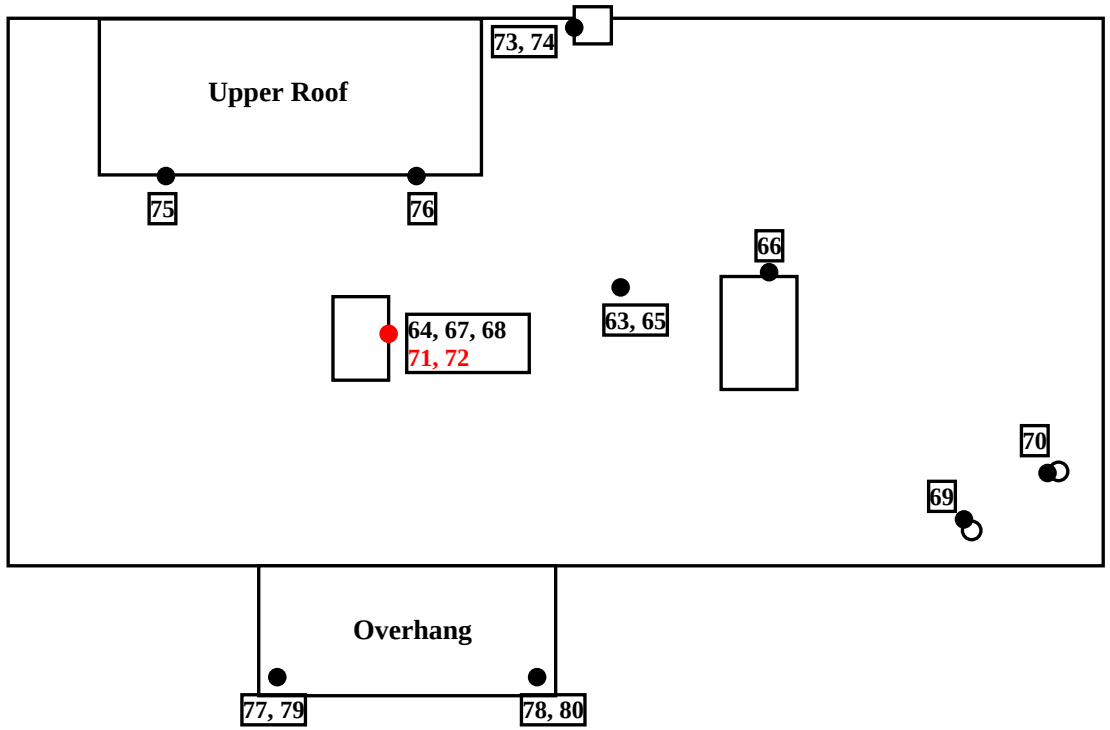

N

Sample Location Key Plan

Drawing Not to Scale

This Drawing is not intended to be used as the sole basis for soliciting pricing for asbestos abatement. An abatement plan, specification, drawing and/or variances should be developed to identify scope, timing, phasing and remediation means & methods for any asbestos project.

SAMPLE LOCATION LEGEND	
●	Sample Location (Non-ACM)
●	Sample Location (ACM)

Town of New Windsor
555 Union Ave
New Windsor, NY 12553

Waste Water Treatment Plant
Control Building
145 Caesar's Lane
New Windsor, New York 12553

QuES&T
Quality Environmental Solutions & Technologies, Inc.
1376 Route 9
Wappingers Falls, NY 12590
Phone: (845) 298 - 6031
Fax: (845) 298-6251

Date: 5-28-2019
Version # 1
Issued For: Asbestos Survey
Project NO: Q19-2382
Project Manager: Anthony Perre
Drawing Prepared By: James Klemm

SL-04

EMSL Analytical, Inc.
307 West 38th Street New York, NY 10018
Tel/Fax: (212) 290-0051 / (212) 290-0058
http://www.EMSL.com / manhattanlab@emsl.com

EMSL Order: 031906553
Customer ID: QUES51
Customer PO:
Project ID:

Attention: Quality Environmental Solution & Tech
1376 Route 9
Wappingers Falls, NY 12590

Phone: (845) 298-6031
Fax: (845) 298-6251
Received Date: 03/26/2019 11:08 AM
Analysis Date: 03/30/2019 - 03/31/2019
Collected Date: 03/25/2019

Project: Q19-2382/ 145 CAESAR'S LANE, MAIN BUILDING

Test Report:Asbestos Analysis of Bulk Material

Test	Analyzed Date	Color	Non-Asbestos Fibrous	Non-Asbestos Non-Fibrous	Asbestos
Sample ID 2381-01		**Description**	ENTRY, WALL, ON SHEETROCK - JOINT COMPOUND		
031906553-0001		**Homogeneity**	Homogeneous		
PLM NYS 198.1 Friable	03/31/2019	Tan/ Green	None	42.00% Ca Carbonate 6.00% Mica 49.60% Non-fibrous (other)	**2.40% Chrysotile**
PLM NYS 198.6 VCM					**Not Analyzed**
PLM NYS 198.6 NOB					**Not Analyzed**
TEM NYS 198.4 NOB					**Not Analyzed**
Sample ID 2381-02		**Description**	ENTRY, PARTITION WALL, ON SHEETROCK - JOINT COMPOUND		
031906553-0002		**Homogeneity**	Homogeneous		
PLM NYS 198.1 Friable	03/31/2019	Tan/ Green	None	40.00% Ca Carbonate 4.00% Mica 52.80% Non-fibrous (other)	**3.20% Chrysotile**
PLM NYS 198.6 VCM					**Not Analyzed**
PLM NYS 198.6 NOB					**Not Analyzed**
TEM NYS 198.4 NOB					**Not Analyzed**
Sample ID 2381-03		**Description**	MENS BATHROOM, PARTITION WALL, ON SHEETROCK - JOINT COMPOUND		
031906553-0003		**Homogeneity**	Homogeneous		
PLM NYS 198.1 Friable	03/31/2019	Tan	None	3.00% Mica 93.40% Non-fibrous (other)	**3.60% Chrysotile**
PLM NYS 198.6 VCM					**Not Analyzed**
PLM NYS 198.6 NOB					**Not Analyzed**
TEM NYS 198.4 NOB					**Not Analyzed**
Sample ID 2381-04		**Description**	RECEPTION OFFICE, PARTITION WALL, ON SHEETROCK - JOINT COMPOUND		
031906553-0004		**Homogeneity**	Homogeneous		
PLM NYS 198.1 Friable	03/31/2019	Tan	None	8.00% Mica 89.30% Non-fibrous (other)	**2.70% Chrysotile**
PLM NYS 198.6 VCM					**Not Analyzed**
PLM NYS 198.6 NOB					**Not Analyzed**
TEM NYS 198.4 NOB					**Not Analyzed**
Sample ID 2381-05		**Description**	MAINTENANCE AREA, PARTITION WALL, ON SHEETROCK - JOINT COMPOUND		
031906553-0005		**Homogeneity**	Homogeneous		
PLM NYS 198.1 Friable	03/31/2019	Tan/ Green	None	5.00% Mica 91.70% Non-fibrous (other)	**3.30% Chrysotile**
PLM NYS 198.6 VCM					**Not Analyzed**
PLM NYS 198.6 NOB					**Not Analyzed**
TEM NYS 198.4 NOB					**Not Analyzed**

Initial report from: 03/31/2019 10:29:40

EMSL Analytical, Inc.
307 West 38th Street New York, NY 10018
Tel/Fax: (212) 290-0051 / (212) 290-0058
http://www.EMSL.com / manhattanlab@emsl.com

EMSL Order: 031906553
Customer ID: QUES51
Customer PO:
Project ID:

Test Report:Asbestos Analysis of Bulk Material

Test	Analyzed Date	Color	Non-Asbestos Fibrous	Non-Asbestos Non-Fibrous	Asbestos
Sample ID 2381-06 *031906553-0006*		**Description** HALLWAY CLOSET, PARTITION WALL, ON SHEETROCK - JOINT COMPOUND **Homogeneity** Homogeneous			
PLM NYS 198.1 Friable	03/31/2019	Tan/ Pink	None	7.00% Mica 89.50% Non-fibrous (other)	**3.50% Chrysotile**
PLM NYS 198.6 VCM					**Not Analyzed**
PLM NYS 198.6 NOB					**Not Analyzed**
TEM NYS 198.4 NOB					**Not Analyzed**
Sample ID 2381-07 *031906553-0007*		**Description** BREAK ROOM, PERIMETER WALL, ON SHEETROCK - JOINT COMPOUND **Homogeneity** Homogeneous			
PLM NYS 198.1 Friable	03/31/2019	White	3.00% Cellulose	65.00% Ca Carbonate 6.00% Mica 26.00% Non-fibrous (other)	**None Detected**
PLM NYS 198.6 VCM					**Not Analyzed**
PLM NYS 198.6 NOB					**Not Analyzed**
TEM NYS 198.4 NOB					**Not Analyzed**
Sample ID 2381-08 *031906553-0008*		**Description** MENS BATHROOM, PARTITION WALL - SHEETROCK **Homogeneity** Homogeneous			
PLM NYS 198.1 Friable	03/31/2019	Brown/ Gray	14.00% Cellulose	56.00% Gypsum 30.00% Non-fibrous (other)	**None Detected**
PLM NYS 198.6 VCM					**Not Analyzed**
PLM NYS 198.6 NOB					**Not Analyzed**
TEM NYS 198.4 NOB					**Not Analyzed**
Sample ID 2381-09 *031906553-0009*		**Description** RECEPTION OFFICE, PARTITION WALL - SHEETROCK **Homogeneity** Homogeneous			
PLM NYS 198.1 Friable	03/31/2019	Gray	8.00% Cellulose	65.00% Gypsum 27.00% Non-fibrous (other)	**None Detected**
PLM NYS 198.6 VCM					**Not Analyzed**
PLM NYS 198.6 NOB					**Not Analyzed**
TEM NYS 198.4 NOB					**Not Analyzed**
Sample ID 2381-10 *031906553-0010*		**Description** LOCKER ROOM, ON METAL PIPE - FIBERGLASS INSULATION **Homogeneity** Homogeneous			
PLM NYS 198.1 Friable	03/31/2019	White/ Yellow	8.00% Cellulose 82.00% Glass	10.00% Non-fibrous (other)	**None Detected**
PLM NYS 198.6 VCM					**Not Analyzed**
PLM NYS 198.6 NOB					**Not Analyzed**
TEM NYS 198.4 NOB					**Not Analyzed**
Sample ID 2381-11-Ceramic Tile *031906553-0011*		**Description** LOCKER ROOM, SHOWER, FLOOR - CERAMIC TILE, GROUT & MUDSET **Homogeneity** Homogeneous			
PLM NYS 198.1 Friable	03/31/2019	White		93.00% Non-fibrous (other) 7.00% Quartz	**None Detected**
PLM NYS 198.6 VCM					**Not Analyzed**
PLM NYS 198.6 NOB					**Not Analyzed**
TEM NYS 198.4 NOB					**Not Analyzed**

Initial report from: 03/31/2019 10:29:40

EMSL Analytical, Inc.
307 West 38th Street New York, NY 10018
Tel/Fax: (212) 290-0051 / (212) 290-0058
http://www.EMSL.com / manhattanlab@emsl.com

EMSL Order: 031906553
Customer ID: QUES51
Customer PO:
Project ID:

Test Report:Asbestos Analysis of Bulk Material

Test	Analyzed Date	Color	Non-Asbestos Fibrous	Non-Asbestos Non-Fibrous	Asbestos
Sample ID 2381-11-Grout *031906553-0011A*		**Description** LOCKER ROOM, SHOWER, FLOOR - CERAMIC TILE, GROUT & MUDSET **Homogeneity** Homogeneous			
PLM NYS 198.1 Friable	03/31/2019	White	15.00% Cellulose	30.00% Ca Carbonate 55.00% Non-fibrous (other)	**None Detected**
PLM NYS 198.6 VCM					**Not Analyzed**
PLM NYS 198.6 NOB					**Not Analyzed**
TEM NYS 198.4 NOB					**Not Analyzed**
Sample ID 2381-11-Mudset *031906553-0011B*		**Description** LOCKER ROOM, SHOWER, FLOOR - CERAMIC TILE, GROUT & MUDSET **Homogeneity** Homogeneous			
PLM NYS 198.1 Friable	03/31/2019	Gray		45.00% Gypsum 55.00% Non-fibrous (other)	**None Detected**
PLM NYS 198.6 VCM					**Not Analyzed**
PLM NYS 198.6 NOB					**Not Analyzed**
TEM NYS 198.4 NOB					**Not Analyzed**
Sample ID 2381-12-Ceramic Tile *031906553-0012*		**Description** LOCKER ROOM, SHOWER, FLOOR - CERAMIC TILE, GROUT & MUDSET **Homogeneity** Homogeneous			
PLM NYS 198.1 Friable	03/31/2019	White		100.00% Non-fibrous (other)	**None Detected**
PLM NYS 198.6 VCM					**Not Analyzed**
PLM NYS 198.6 NOB					**Not Analyzed**
TEM NYS 198.4 NOB					**Not Analyzed**
Sample ID 2381-12-Grout *031906553-0012A*		**Description** LOCKER ROOM, SHOWER, FLOOR - CERAMIC TILE, GROUT & MUDSET **Homogeneity** Homogeneous			
PLM NYS 198.1 Friable	03/31/2019	Gray		45.00% Ca Carbonate 55.00% Non-fibrous (other)	**None Detected**
PLM NYS 198.6 VCM					**Not Analyzed**
PLM NYS 198.6 NOB					**Not Analyzed**
TEM NYS 198.4 NOB					**Not Analyzed**
Sample ID 2381-12-Mudset *031906553-0012B*		**Description** LOCKER ROOM, SHOWER, FLOOR - CERAMIC TILE, GROUT & MUDSET **Homogeneity** Homogeneous			
PLM NYS 198.1 Friable	03/31/2019	Gray	10.00% Cellulose	90.00% Non-fibrous (other)	**None Detected**
PLM NYS 198.6 VCM					**Not Analyzed**
PLM NYS 198.6 NOB					**Not Analyzed**
TEM NYS 198.4 NOB					**Not Analyzed**
Sample ID 2381-13-Ceramic Tile *031906553-0013*		**Description** LOCKER ROOM, SHOWER, WALL - CERAMIC TILE & GROUT **Homogeneity** Homogeneous			
PLM NYS 198.1 Friable	03/31/2019	White		95.00% Non-fibrous (other) 5.00% Quartz	**None Detected**
PLM NYS 198.6 VCM					**Not Analyzed**
PLM NYS 198.6 NOB					**Not Analyzed**
TEM NYS 198.4 NOB					**Not Analyzed**

Initial report from: 03/31/2019 10:29:40

EMSL Analytical, Inc.
307 West 38th Street New York, NY 10018
Tel/Fax: (212) 290-0051 / (212) 290-0058
http://www.EMSL.com / manhattanlab@emsl.com

EMSL Order: 031906553
Customer ID: QUES51
Customer PO:
Project ID:

Test Report:Asbestos Analysis of Bulk Material

Test	Analyzed Date	Color	Non-Asbestos Fibrous	Non-Asbestos Non-Fibrous	Asbestos
Sample ID 2381-13-Grout *031906553-0013A*		**Description** LOCKER ROOM, SHOWER, WALL - CERAMIC TILE & GROUT **Homogeneity** Homogeneous			
PLM NYS 198.1 Friable	03/31/2019	White		35.00% Ca Carbonate 55.00% Non-fibrous (other) 10.00% Quartz	**None Detected**
PLM NYS 198.6 VCM					**Not Analyzed**
PLM NYS 198.6 NOB					**Not Analyzed**
TEM NYS 198.4 NOB					**Not Analyzed**
Sample ID 2381-14-Ceramic Tile *031906553-0014*		**Description** LOCKER ROOM, SHOWER, WALL - CERAMIC TILE & GROUT **Homogeneity** Homogeneous			
PLM NYS 198.1 Friable	03/31/2019	White		100.00% Non-fibrous (other)	**None Detected**
PLM NYS 198.6 VCM					**Not Analyzed**
PLM NYS 198.6 NOB					**Not Analyzed**
TEM NYS 198.4 NOB					**Not Analyzed**
Sample ID 2381-14-Grout *031906553-0014A*		**Description** LOCKER ROOM, SHOWER, WALL - CERAMIC TILE & GROUT **Homogeneity** Homogeneous			
PLM NYS 198.1 Friable	03/31/2019	White		45.00% Ca Carbonate 55.00% Non-fibrous (other)	**None Detected**
PLM NYS 198.6 VCM					**Not Analyzed**
PLM NYS 198.6 NOB					**Not Analyzed**
TEM NYS 198.4 NOB					**Not Analyzed**
Sample ID 2381-15 *031906553-0015*		**Description** LOCKER ROOM, SHOWER, WALL, BEHIND CERAMIC TILE, ON CMU - MORTAR **Homogeneity** Homogeneous			
PLM NYS 198.1 Friable	03/31/2019	Gray/ White		70.00% Non-fibrous (other) 30.00% Quartz	**None Detected**
PLM NYS 198.6 VCM					**Not Analyzed**
PLM NYS 198.6 NOB					**Not Analyzed**
TEM NYS 198.4 NOB					**Not Analyzed**
Sample ID 2381-16 *031906553-0016*		**Description** LOCKER ROOM, SHOWER, WALL, BEHIND CERAMIC TILE, ON CMU - MORTAR **Homogeneity** Homogeneous			
PLM NYS 198.1 Friable	03/31/2019	Gray		25.00% Ca Carbonate 25.00% Non-fibrous (other) 50.00% Quartz	**None Detected**
PLM NYS 198.6 VCM					**Not Analyzed**
PLM NYS 198.6 NOB					**Not Analyzed**
TEM NYS 198.4 NOB					**Not Analyzed**
Sample ID 2381-17-Brick *031906553-0017*		**Description** ENTRY, WALL - BRICK & MORTAR **Homogeneity** Homogeneous			
PLM NYS 198.1 Friable	03/31/2019	Red		85.00% Non-fibrous (other) 15.00% Quartz	**None Detected**
PLM NYS 198.6 VCM					**Not Analyzed**
PLM NYS 198.6 NOB					**Not Analyzed**
TEM NYS 198.4 NOB					**Not Analyzed**

Initial report from: 03/31/2019 10:29:40

EMSL Analytical, Inc.
307 West 38th Street New York, NY 10018
Tel/Fax: (212) 290-0051 / (212) 290-0058
http://www.EMSL.com / manhattanlab@emsl.com

EMSL Order: 031906553
Customer ID: QUES51
Customer PO:
Project ID:

Test Report:Asbestos Analysis of Bulk Material

Test	Analyzed Date	Color	Non-Asbestos Fibrous	Non-Asbestos Non-Fibrous	Asbestos
Sample ID 2381-17-Mortar *031906553-0017A*		**Description** ENTRY, WALL - BRICK & MORTAR **Homogeneity** Homogeneous			
PLM NYS 198.1 Friable	03/31/2019	Gray		35.00% Gypsum 28.00% Non-fibrous (other) 37.00% Quartz	**None Detected**
PLM NYS 198.6 VCM					**Not Analyzed**
PLM NYS 198.6 NOB					**Not Analyzed**
TEM NYS 198.4 NOB					**Not Analyzed**
Sample ID 2381-18-Brick *031906553-0018*		**Description** ENTRY, WALL - BRICK & MORTAR **Homogeneity** Homogeneous			
PLM NYS 198.1 Friable	03/31/2019	Red		80.00% Non-fibrous (other) 20.00% Quartz	**None Detected**
PLM NYS 198.6 VCM					**Not Analyzed**
PLM NYS 198.6 NOB					**Not Analyzed**
TEM NYS 198.4 NOB					**Not Analyzed**
Sample ID 2381-18-Mortar *031906553-0018A*		**Description** ENTRY, WALL - BRICK & MORTAR **Homogeneity** Homogeneous			
PLM NYS 198.1 Friable	03/31/2019	Gray		25.00% Ca Carbonate 20.00% Non-fibrous (other) 55.00% Quartz	**None Detected**
PLM NYS 198.6 VCM					**Not Analyzed**
PLM NYS 198.6 NOB					**Not Analyzed**
TEM NYS 198.4 NOB					**Not Analyzed**
Sample ID 2381-19-Block *031906553-0019*		**Description** SEPARATOR ROOM, PARTITION WALL - CEMENTITIOUS BLOCK & MORTAR **Homogeneity** Homogeneous			
PLM NYS 198.1 Friable	03/31/2019	Gray		25.00% Ca Carbonate 40.00% Gypsum 35.00% Non-fibrous (other)	**None Detected**
PLM NYS 198.6 VCM					**Not Analyzed**
PLM NYS 198.6 NOB					**Not Analyzed**
TEM NYS 198.4 NOB					**Not Analyzed**
Sample ID 2381-19-Mortar *031906553-0019A*		**Description** SEPARATOR ROOM, PARTITION WALL - CEMENTITIOUS BLOCK & MORTAR **Homogeneity** Homogeneous			
PLM NYS 198.1 Friable	03/31/2019	Gray		68.00% Non-fibrous (other) 32.00% Quartz	**None Detected**
PLM NYS 198.6 VCM					**Not Analyzed**
PLM NYS 198.6 NOB					**Not Analyzed**
TEM NYS 198.4 NOB					**Not Analyzed**

Initial report from: 03/31/2019 10:29:40

EMSL Analytical, Inc.
307 West 38th Street New York, NY 10018
Tel/Fax: (212) 290-0051 / (212) 290-0058
http://www.EMSL.com / manhattanlab@emsl.com

EMSL Order: 031906553
Customer ID: QUES51
Customer PO:
Project ID:

Test Report:Asbestos Analysis of Bulk Material

Test	Analyzed Date	Color	Non-Asbestos Fibrous	Non-Fibrous	Asbestos
Sample ID 2381-20-Block *031906553-0020*		**Description** **Homogeneity**	MENS BATHROOM, PERIMETER WALL - CEMENTITIOUS BLOCK & MORTAR Homogeneous		
PLM NYS 198.1 Friable	03/31/2019	Gray		65.00% Ca Carbonate 35.00% Non-fibrous (other)	**None Detected**
Inseparable paint / coating layer included in analysis					
PLM NYS 198.6 VCM					**Not Analyzed**
PLM NYS 198.6 NOB					**Not Analyzed**
TEM NYS 198.4 NOB					**Not Analyzed**
Sample ID 2381-20-Mortar *031906553-0020A*		**Description** **Homogeneity**	MENS BATHROOM, PERIMETER WALL - CEMENTITIOUS BLOCK & MORTAR Homogeneous		
PLM NYS 198.1 Friable	03/31/2019	Gray		25.00% Ca Carbonate 20.00% Non-fibrous (other) 55.00% Quartz	**None Detected**
PLM NYS 198.6 VCM					**Not Analyzed**
PLM NYS 198.6 NOB					**Not Analyzed**
TEM NYS 198.4 NOB					**Not Analyzed**
Sample ID 2381-21 *031906553-0021*		**Description** **Homogeneity**	ENTRY, FLOOR - QUARRY TILE Homogeneous		
PLM NYS 198.1 Friable	03/31/2019	Red		88.00% Non-fibrous (other) 12.00% Quartz	**None Detected**
PLM NYS 198.6 VCM					**Not Analyzed**
PLM NYS 198.6 NOB					**Not Analyzed**
TEM NYS 198.4 NOB					**Not Analyzed**
Sample ID 2381-22 *031906553-0022*		**Description** **Homogeneity**	MAINTENANCE ROOM, CLOSET, FLOOR - QUARRY TILE Homogeneous		
PLM NYS 198.1 Friable	03/31/2019	Red		85.00% Non-fibrous (other) 15.00% Quartz	**None Detected**
PLM NYS 198.6 VCM					**Not Analyzed**
PLM NYS 198.6 NOB					**Not Analyzed**
TEM NYS 198.4 NOB					**Not Analyzed**
Sample ID 2381-23 *031906553-0023*		**Description** **Homogeneity**	MAINTENANCE ROOM, CLOSET, FLOOR, UNDER QUARRY TILE, ON SLAB - MUDSET Homogeneous		
PLM NYS 198.1 Friable	03/31/2019	Gray		52.00% Non-fibrous (other) 48.00% Quartz	**None Detected**
PLM NYS 198.6 VCM					**Not Analyzed**
PLM NYS 198.6 NOB					**Not Analyzed**
TEM NYS 198.4 NOB					**Not Analyzed**
Sample ID 2381-24 *031906553-0024*		**Description** **Homogeneity**	ENTRY, FLOOR, UNDER QUARRY TILE, ON SLAB - MUDSET Homogeneous		
PLM NYS 198.1 Friable	03/31/2019	Gray		25.00% Ca Carbonate 20.00% Non-fibrous (other) 55.00% Quartz	**None Detected**
PLM NYS 198.6 VCM					**Not Analyzed**
PLM NYS 198.6 NOB					**Not Analyzed**
TEM NYS 198.4 NOB					**Not Analyzed**

Initial report from: 03/31/2019 10:29:40

EMSL Analytical, Inc.
307 West 38th Street New York, NY 10018
Tel/Fax: (212) 290-0051 / (212) 290-0058
http://www.EMSL.com / manhattanlab@emsl.com

EMSL Order: 031906553
Customer ID: QUES51
Customer PO:
Project ID:

Test Report:Asbestos Analysis of Bulk Material

Test	Analyzed Date	Color	Non-Asbestos Fibrous	Non-Asbestos Non-Fibrous	Asbestos
Sample ID 2381-25 *031906553-0025*		**Description** MAINTENANCE ROOM, CLOSET, FLOOR, ON QUARRY TILE - GROUT **Homogeneity** Homogeneous			
PLM NYS 198.1 Friable	03/31/2019	Gray		64.00% Non-fibrous (other) 36.00% Quartz	**None Detected**
PLM NYS 198.6 VCM					**Not Analyzed**
PLM NYS 198.6 NOB					**Not Analyzed**
TEM NYS 198.4 NOB					**Not Analyzed**
Sample ID 2381-26 *031906553-0026*		**Description** ENTRY, FLOOR, ON QUARRY TILE - GROUT **Homogeneity** Homogeneous			
PLM NYS 198.1 Friable	03/31/2019	Gray		45.00% Non-fibrous (other) 55.00% Quartz	**None Detected**
PLM NYS 198.6 VCM					**Not Analyzed**
PLM NYS 198.6 NOB					**Not Analyzed**
TEM NYS 198.4 NOB					**Not Analyzed**
Sample ID 2381-27 *031906553-0027*		**Description** SEPARATOR ROOM, FLOOR, PAD - CEMENTITIOUS SLAB **Homogeneity** Homogeneous			
PLM NYS 198.1 Friable	03/31/2019	Gray/ Yellow		42.00% Gypsum 34.00% Non-fibrous (other) 24.00% Quartz	**None Detected**
PLM NYS 198.6 VCM					**Not Analyzed**
PLM NYS 198.6 NOB					**Not Analyzed**
TEM NYS 198.4 NOB					**Not Analyzed**
Sample ID 2381-28 *031906553-0028*		**Description** SEPARATOR ROOM, FLOOR - CEMENTITIOUS SLAB **Homogeneity** Homogeneous			
PLM NYS 198.1 Friable	03/31/2019	Gray		25.00% Ca Carbonate 30.00% Non-fibrous (other) 45.00% Quartz	**None Detected**
PLM NYS 198.6 VCM					**Not Analyzed**
PLM NYS 198.6 NOB					**Not Analyzed**
TEM NYS 198.4 NOB					**Not Analyzed**
Sample ID 2381-29 *031906553-0029*		**Description** MENS BATHROOM, SUSPENDED CEILING, 2'X4' DOT CANYON - CEILING TILE **Homogeneity** Heterogeneous			
PLM NYS 198.1 Friable					**Not Analyzed**
PLM NYS 198.6 VCM					**Not Analyzed**
PLM NYS 198.6 NOB	03/30/2019	Gray/ White		100.00% Other	**Inconclusive: None Detected**
TEM NYS 198.4 NOB	03/31/2019	Gray/ White		100.00% Other	**None Detected**
Sample ID 2381-30 *031906553-0030*		**Description** RECEPTION OFFICE, SUSPENDED CEILING, 2'X4' DOT CANYON - CEILING TILE **Homogeneity** Heterogeneous			
PLM NYS 198.1 Friable					**Not Analyzed**
PLM NYS 198.6 VCM					**Not Analyzed**
PLM NYS 198.6 NOB	03/30/2019	Gray/ White		100.00% Other	**Inconclusive: None Detected**
TEM NYS 198.4 NOB	03/31/2019	Gray/ White		100.00% Other	**None Detected**

Initial report from: 03/31/2019 10:29:40

EMSL Analytical, Inc.
307 West 38th Street New York, NY 10018
Tel/Fax: (212) 290-0051 / (212) 290-0058
http://www.EMSL.com / manhattanlab@emsl.com

EMSL Order: 031906553
Customer ID: QUES51
Customer PO:
Project ID:

Test Report:Asbestos Analysis of Bulk Material

Test	Analyzed Date	Color	Non-Asbestos Fibrous	Non-Asbestos Non-Fibrous	Asbestos
Sample ID 2381-31-Cove Base *031906553-0031*		**Description**	RECEPTION OFFICE, WALL, ON SHEETROCK - COVE BASE MOLDING & ADHESIVE		
		Homogeneity	Heterogeneous		
PLM NYS 198.1 Friable					**Not Analyzed**
PLM NYS 198.6 VCM					**Not Analyzed**
PLM NYS 198.6 NOB	03/30/2019	Black		100.00% Other	**Inconclusive: None Detected**
TEM NYS 198.4 NOB	03/31/2019	Black		100.00% Other	**None Detected**
Sample ID 2381-31-Adhesive *031906553-0031A*		**Description**	RECEPTION OFFICE, WALL, ON SHEETROCK - COVE BASE MOLDING & ADHESIVE		
		Homogeneity	Heterogeneous		
PLM NYS 198.1 Friable					**Not Analyzed**
PLM NYS 198.6 VCM					**Not Analyzed**
PLM NYS 198.6 NOB	03/30/2019	Yellow		100.00% Other	**Inconclusive: None Detected**
TEM NYS 198.4 NOB	03/31/2019	Yellow		100.00% Other	**None Detected**
Sample ID 2381-32-Cove Base *031906553-0032*		**Description**	LAB, WALL, ON SHEETROCK - COVE BASE MOLDING & ADHESIVE		
		Homogeneity	Heterogeneous		
PLM NYS 198.1 Friable					**Not Analyzed**
PLM NYS 198.6 VCM					**Not Analyzed**
PLM NYS 198.6 NOB	03/30/2019	Black		100.00% Other	**Inconclusive: None Detected**
TEM NYS 198.4 NOB	03/31/2019	Black		100.00% Other	**None Detected**
Sample ID 2381-32-Adhesive *031906553-0032A*		**Description**	LAB, WALL, ON SHEETROCK - COVE BASE MOLDING & ADHESIVE		
		Homogeneity	Heterogeneous		
PLM NYS 198.1 Friable					**Not Analyzed**
PLM NYS 198.6 VCM					**Not Analyzed**
PLM NYS 198.6 NOB	03/30/2019	Black		100.00% Other	**Inconclusive: None Detected**
TEM NYS 198.4 NOB	03/31/2019	Black		100.00% Other	**None Detected**
Sample ID 2381-33-Cove Base *031906553-0033*		**Description**	RECEPTION OFFICE, WALL, ON SHEETROCK - COVE BASE MOLDING & ADHESIVE		
		Homogeneity	Heterogeneous		
PLM NYS 198.1 Friable					**Not Analyzed**
PLM NYS 198.6 VCM					**Not Analyzed**
PLM NYS 198.6 NOB	03/30/2019	Gray		100.00% Other	**Inconclusive: None Detected**
TEM NYS 198.4 NOB	03/31/2019	Gray		100.00% Other	**None Detected**
Sample ID 2381-33-Adhesive *031906553-0033A*		**Description**	RECEPTION OFFICE, WALL, ON SHEETROCK - COVE BASE MOLDING & ADHESIVE		
		Homogeneity	Heterogeneous		
PLM NYS 198.1 Friable					**Not Analyzed**
PLM NYS 198.6 VCM					**Not Analyzed**
PLM NYS 198.6 NOB	03/30/2019	Yellow		100.00% Other	**Inconclusive: None Detected**
TEM NYS 198.4 NOB	03/31/2019	Yellow		100.00% Other	**None Detected**

Initial report from: 03/31/2019 10:29:40

EMSL Analytical, Inc.
307 West 38th Street New York, NY 10018
Tel/Fax: (212) 290-0051 / (212) 290-0058
http://www.EMSL.com / manhattanlab@emsl.com

EMSL Order: 031906553
Customer ID: QUES51
Customer PO:
Project ID:

Test Report:Asbestos Analysis of Bulk Material

Test	Analyzed Date	Color	Non-Asbestos Fibrous	Non-Asbestos Non-Fibrous	Asbestos
Sample ID 2381-34-Cove Base *031906553-0034*		**Description** ENTRY, WALL, ON SHEETROCK - COVE BASE MOLDING & ADHESIVE **Homogeneity** Heterogeneous			
PLM NYS 198.1 Friable					**Not Analyzed**
PLM NYS 198.6 VCM					**Not Analyzed**
PLM NYS 198.6 NOB	03/30/2019	Gray		100.00% Other	**Inconclusive: None Detected**
TEM NYS 198.4 NOB	03/31/2019	Gray		100.00% Other	**None Detected**
Sample ID 2381-34-Adhesive *031906553-0034A*		**Description** ENTRY, WALL, ON SHEETROCK - COVE BASE MOLDING & ADHESIVE **Homogeneity** Heterogeneous			
PLM NYS 198.1 Friable					**Not Analyzed**
PLM NYS 198.6 VCM					**Not Analyzed**
PLM NYS 198.6 NOB	03/30/2019	Yellow		100.00% Other	**Inconclusive: None Detected**
TEM NYS 198.4 NOB	03/31/2019	Yellow		100.00% Other	**None Detected**
Sample ID 2381-35 *031906553-0035*		**Description** BREAK ROOM, SINK, ON METAL - ANTI SWEAT TAR **Homogeneity** Heterogeneous			
PLM NYS 198.1 Friable					**Not Analyzed**
PLM NYS 198.6 VCM					**Not Analyzed**
PLM NYS 198.6 NOB	03/30/2019	Black		100.00% Other	**Inconclusive: None Detected**
TEM NYS 198.4 NOB	03/31/2019	Black		100.00% Other	**None Detected**
Sample ID 2381-36 *031906553-0036*		**Description** BREAK ROOM, SINK, ON METAL - ANTI SWEAT TAR **Homogeneity** Heterogeneous			
PLM NYS 198.1 Friable					**Not Analyzed**
PLM NYS 198.6 VCM					**Not Analyzed**
PLM NYS 198.6 NOB	03/30/2019	Black		100.00% Other	**Inconclusive: None Detected**
TEM NYS 198.4 NOB	03/31/2019	Black		100.00% Other	**None Detected**
Sample ID 2381-37 *031906553-0037*		**Description** EXTERIOR, ENTRANCE DOOR, METAL TO BRICK - CAULK **Homogeneity** Heterogeneous			
PLM NYS 198.1 Friable					**Not Analyzed**
PLM NYS 198.6 VCM					**Not Analyzed**
PLM NYS 198.6 NOB	03/30/2019	Gray	None	100.00% Other	**Inconclusive : <1.00% Chrysotile**
TEM NYS 198.4 NOB	03/31/2019	Gray	None	98.40% Other	**1.60% Chrysotile**
Sample ID 2381-38 *031906553-0038*		**Description** EXTERIOR, ENTRANCE DOOR, METAL TO BRICK - CAULK **Homogeneity** Heterogeneous			
PLM NYS 198.1 Friable					**Not Analyzed**
PLM NYS 198.6 VCM					**Not Analyzed**
PLM NYS 198.6 NOB	03/30/2019	Gray	<1.00% Fibrous (other)	100.00% Other	**Inconclusive: None Detected**
TEM NYS 198.4 NOB	03/31/2019				**Positive Stop (Not Analyzed)**

Initial report from: 03/31/2019 10:29:40

EMSL Analytical, Inc.
307 West 38th Street New York, NY 10018
Tel/Fax: (212) 290-0051 / (212) 290-0058
http://www.EMSL.com / manhattanlab@emsl.com

EMSL Order: 031906553
Customer ID: QUES51
Customer PO:
Project ID:

Test Report:Asbestos Analysis of Bulk Material

Test	Analyzed Date	Color	Non-Asbestos Fibrous	Non-Asbestos Non-Fibrous	Asbestos
Sample ID 2381-39 *031906553-0039*		**Description** EXTERIOR, WINDOW, BRICK TO METAL - CAULK **Homogeneity** Heterogeneous			
PLM NYS 198.1 Friable					**Not Analyzed**
PLM NYS 198.6 VCM					**Not Analyzed**
PLM NYS 198.6 NOB	03/30/2019	Gray		100.00% Other	**Inconclusive: None Detected**
TEM NYS 198.4 NOB	03/31/2019	Gray		100.00% Other	**None Detected**
Sample ID 2381-40 *031906553-0040*		**Description** EXTERIOR, WINDOW, BRICK TO METAL - CAULK **Homogeneity** Heterogeneous			
PLM NYS 198.1 Friable					**Not Analyzed**
PLM NYS 198.6 VCM					**Not Analyzed**
PLM NYS 198.6 NOB	03/30/2019	Gray	None	100.00% Other	**Inconclusive : <1.00% Chrysotile**
TEM NYS 198.4 NOB	03/31/2019	Gray	None	100.00% Other	**<1.00% Chrysotile**
Sample ID 2381-41 *031906553-0041*		**Description** EXTERIOR, WINDOW, GLASS TO METAL - GLAZING **Homogeneity** Heterogeneous			
PLM NYS 198.1 Friable					**Not Analyzed**
PLM NYS 198.6 VCM					**Not Analyzed**
PLM NYS 198.6 NOB	03/30/2019	Gray	<1.00% Fibrous (other)	100.00% Other	**Inconclusive: None Detected**
TEM NYS 198.4 NOB	03/31/2019	Gray	None	100.00% Other	**<1.00% Anthophyllite**
Sample ID 2381-42 *031906553-0042*		**Description** EXTERIOR, WINDOW, GLASS TO METAL - GLAZING **Homogeneity** Heterogeneous			
PLM NYS 198.1 Friable					**Not Analyzed**
PLM NYS 198.6 VCM					**Not Analyzed**
PLM NYS 198.6 NOB	03/30/2019	Gray	<1.00% Fibrous (other)	100.00% Other	**Inconclusive: None Detected**
TEM NYS 198.4 NOB	03/31/2019	Gray	None	100.00% Other	**<1.00% Anthophyllite**

Initial report from: 03/31/2019 10:29:40

EMSL Analytical, Inc.
307 West 38th Street New York, NY 10018
Tel/Fax: (212) 290-0051 / (212) 290-0058
http://www.EMSL.com / manhattanlab@emsl.com

EMSL Order:	031906553
Customer ID:	QUES51
Customer PO:	
Project ID:	

Test Report:Asbestos Analysis of Bulk Material

The samples in this report were submitted to EMSL for analysis by Asbestos Analysis of Bulk Materials via NYS ELAP Approved Methods . The reference number for these samples is the EMSL Order ID above. Please use this reference number when calling about these samples.

Report Comments:

Sample Receipt Date:	3/26/2019	Sample Receipt Time:	11:08 AM
Analysis Completed Date:	3/31/2019	Analysis Completed Time:	8:29 PM

Analyst(s):

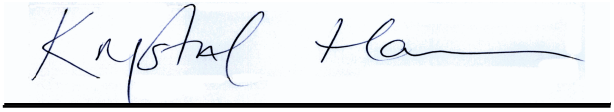

Krystal Harris PLM NYS 198.1 Friable (16)

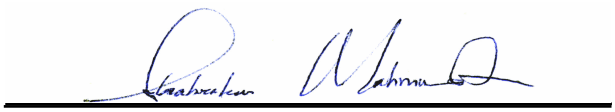

Shahrakur Mahmud PLM NYS 198.1 Friable (22)



Chad Layne PLM NYS 198.6 NOB (18)



Hongyan Ran TEM NYS 198.4 NOB (17)

Samples reviewed and approved by:



James Hall, Laboratory Manager
or Other Approved Signatory

NOB = Non Friable Organically Bound N/A = Not Applicable VCM = Vermiculite Containing Material

-In New York State, TEM is currently the only method that can be used to determine if NOB materials can be considered or treated as non -asbestos containing.
All samples examined for the presence of vermiculite when analyzed via NYS 198.1.
-NYS Guidelines for Vermiculite containing samples are available at http ://www.wadsworth.org/labcert/elapcert/forms/ VermiculiteInterimGuidance_Rev070913.pdf EMSL maintains liability limited to cost of analysis. This report relates only to the samples reported above and may not be reproduced, except in full, without written approval by EMSL. EMSL bears no responsibility for sample collection activities or analytical method limitations . Interpretation and use of test results are the responsibility of the client. Samples were received in good condition unless otherwise noted.
This report must not be used by the client to claim product certification, approval, or endorsement by NVLAP, NIST, or any agency of the federal government . This report may contain data that is not covered by the NVLAP accreditation.

Samples analyzed by EMSL Analytical, Inc. New York, NY NYS ELAP 11506

Initial report from: 03/31/2019 10:29:40

OrderID: 031906553

031906553

QUALITY ENVIRONMENTAL SOLUTIONS & TECHNOLOGIES, INC.

BULK SAMPLE FORM

CLIENT: **TOWN OF NEW WINDSOR**

ADDRESS: **555 UNION AVE**

NEW WINDSOR, NY 12553

CONTACT: **ANDREW WARREN**

PROJECT ID: **145 Caesar's Lane**

Main Building

PROJECT # : **Q19-2382**

SAMPLED BY: **J. Klemm/S. Talsma**

DATE SAMPLED: **25-Mar-19**

ANALYSIS METHOD: **PLM/PLM-NOB/QTEM as required**

TURN-AROUND TIME: _____ HOURS

5 DAYS

_____ OTHER

EMSL MANHATTAN LAB RECEIVED 19 MAR 26 AM 11:08

SAMPLE # LAB#	*LOCATION*	*SAMPLE DESCRIPTION*	*COMMENTS*
2382-01	Entry, Wall, on Sheetrock	Joint Compound	
2382-02	Entry, Partition Wall, on Sheetrock	Joint Compound	
2382-03	Mens Bathroom, Parititon Wall, on Sheetrock	Joint Compound	
2382-04	Reception Office, Partition Wall, on Sheetrock	Joint Compound	
2382-05	Maintence Area, Partition Wall, on Sheetrock	Joint Compound	
2382-06	Hallway Closet, Partition Wall, on Sheetrock	Joint Compound	
2382-07	Break Room, Perimeter Wall, on Sheetrock	Joint Compound	
2382-08	Mens Bathroom, Partition Wall	Sheetrock	**Stop At First Office**
2382-09	Reception Office, Partition Wall	Sheetrock	
2382-10	Locker Room, on Metal Pipe	Fiberglass Insulation (Confirmatory)	

CHAIN OF CUSTODY (SEE LAST PAGE)

SUBMITTED BY: _____ DATE: 3/25/2019

RECEIVED BY: _____ DATE: 3/26/19 11:09 AM

PAGE 1 OF 5

OrderID: 031906553

031906553

QUALITY ENVIRONMENTAL SOLUTIONS & TECHNOLOGIES, INC.

BULK SAMPLE FORM

EMSL MANHATTAN LAB RECEIVED 19 MAR 26 AM 8:08

CLIENT: **TOWN OF NEW WINDSOR**

ADDRESS: **555 UNION AVE**

NEW WINDSOR, NY 12553

CONTACT: **ANDREW WARREN**

PROJECT ID: **145 Caesar's Lane**

Main Building

PROJECT # : **Q19-2382**

SAMPLED BY: **J. Klemm/S. Talsma**

DATE SAMPLED: **25-Mar-19**

ANALYSIS METHOD: **PLM/PLM-NOB/QTEM as required**

TURN-AROUND TIME: _____ HOURS

5 DAYS

_____ OTHER

SAMPLE # LAB#	*LOCATION*	*SAMPLE DESCRIPTION*	*COMMENTS*
2382-11	Locker Room, Shower, Floor	Ceramic Tile, Grout & Mudset (Separate Layers)	
2382-12	Locker Room, Shower, Floor	Ceramic Tile, Grout & Mudset (Separate Layers)	
2382-13	Locker Room, Shower, Wall	Ceramic Tile & Grout (Separate Layers)	**Stop At First Office**
2382-14	Locker Room, Shower, Wall	Ceramic Tile & Grout (Separate Layers)	
2382-15	Locker Room, Shower, Wall, Behind Ceramic Tile, on CMU	Mortar	**Stop At First Office**
2382-16	Locker Room, Shower, Wall, Behind Ceramic Tile, on CMU	Mortar	
2382-17	Entry, Wall	Brick & Mortar (Separate Layers)	**Stop At First Office**
2382-18	Entry, Wall	Brick & Mortar (Separate Layers)	
2382-19	Separator Room, Partition Wall	Cementitious Block & Mortar (Separate Layers)	**Stop At First Office**
2382-20	Mens Bathroom, Perimeter Wall	Cementitious Block & Mortar (Separate Layers)	

CHAIN OF CUSTODY (SEE LAST PAGE)

SUBMITTED BY: _____ DATE: 3/25/2019

RECEIVED BY: _____ DATE: 3/26/19 11:07AM

PAGE__2__OF__5__

OrderID: 031906553

031906553

QUALITY ENVIRONMENTAL SOLUTIONS & TECHNOLOGIES, INC.

BULK SAMPLE FORM

EMSL MANHATTAN LAB RECEIVED 19 MAR 26 AM 11:08

CLIENT: **TOWN OF NEW WINDSOR**

ADDRESS: **555 UNION AVE**
NEW WINDSOR, NY 12553

CONTACT: **ANDREW WARREN**

PROJECT ID: **145 Caesar's Lane**
Main Building

PROJECT # : **Q19-2382**

SAMPLED BY: **J. Klemm/S. Talsma**

DATE SAMPLED: **25-Mar-19**

ANALYSIS METHOD: **PLM/PLM-NOB/QTEM as required**

TURN-AROUND TIME: _____ HOURS
5 DAYS
_____ OTHER

SAMPLE # LAB#	*LOCATION*	*SAMPLE DESCRIPTION*	*COMMENTS*
2382-21	Entry, Floor	Quarry Tile	**Stop At First Office**
2382-22	Maintence Room, Closet, Floor	Quarry Tile	
2382-23	Maintence Room, Closet, Floor, under Quarry Tile, on Slab	Mudset	**Stop At First Office**
2382-24	Entry, Floor, under Quarry Tile, on Slab	Mudset	
2382-25	Maintence Room, Closet, Floor, on Quarry Tile	Grout	**Stop At First Office**
2382-26	Entry, Floor, on Quarry Tile	Grout	
2382-27	Separator Room, Floor, Pad	Cementitious Slab	**Stop At First Office**
2382-28	Separator Room, Floor	Cementitious Slab	
2382-29	Mens Bathroom, Suspended Ceiling, 2' x 4', Dot Canyon	Ceiling Tile	**Stop At First Office**
2382-30	Reception Office, Suspended Ceiling, 2' x 4', Dot Canyon	Ceiling Tile	

CHAIN OF CUSTODY (SEE LAST PAGE)

SUBMITTED BY: _____ DATE: 3/25/2019

RECEIVED BY: _____ DATE: 3/26/19 11:08 Am

PAGE 3 OF 5

OrderID: 031906553

031906553

QUALITY ENVIRONMENTAL SOLUTIONS & TECHNOLOGIES, INC.

BULK SAMPLE FORM

EMSL MANHATTAN LAB RECEIVED 19 MAR 26 AM 11:08

CLIENT: TOWN OF NEW WINDSOR
ADDRESS: 555 UNION AVE
NEW WINDSOR, NY 12553
CONTACT: ANDREW WARREN
PROJECT ID: 145 Caesar's Lane
Main Building
PROJECT # : Q19-2382

SAMPLED BY: J. Klemm/S. Talsma
DATE SAMPLED: 25-Mar-19
ANALYSIS METHOD: PLM/PLM-NOB/QTEM as required
TURN-AROUND TIME: _____ HOURS
5 DAYS
_____ OTHER

SAMPLE # LAB#	LOCATION	SAMPLE DESCRIPTION	COMMENTS
2382-31	Reception Office, Wall, on Sheetrock	Cove Base Molding & Adhesive (Separate Layers)	Stop At First Office
2382-32	Lab, Wall, on Sheetrock	Cove Base Molding & Adhesive (Separate Layers)	
2382-33	Reception Office, Wall, on Sheetrock	Cove Base Molding & Adhesive (Separate Layers)	Stop At First Office
2382-34	Entry, Wall, on Sheetrock	Cove Base Molding & Adhesive (Separate Layers)	
2382-35	Break Room, Sink, on Metal	Anti Sweat Tar	Stop At First Office
2382-36	Break Room, Sink, on Metal	Anti Sweat Tar	
2382-37	Exterior, Entrance Door, Metal to Brick	Caulk	Stop At First Office
2382-38	Exterior, Entrance Door, Metal to Brick	Caulk	
2382-39	Exterior, Window, Brick to Metal	Caulk	Stop At First Office
2382-40	Exterior, Window, Brick to Metal	Caulk	

CHAIN OF CUSTODY (SEE LAST PAGE)

SUBMITTED BY: _____ DATE: 3/25/2019

RECEIVED BY: _____ DATE: 3/26/19 11:08 AM

PAGE 4 OF 5

OrderID: 031906553

031906553

QUALITY ENVIRONMENTAL SOLUTIONS & TECHNOLOGIES, INC.

BULK SAMPLE FORM

CLIENT: **TOWN OF NEW WINDSOR**

ADDRESS: **555 UNION AVE**

NEW WINDSOR, NY 12553

CONTACT: **ANDREW WARREN**

PROJECT ID: **145 Caesar's Lane**

Main Building

PROJECT # : **Q19-2382**

SAMPLED BY: **J. Klemm/S. Talsma**

DATE SAMPLED: **25-Mar-19**

ANALYSIS METHOD: **PLM/PLM-NOB/QTEM as required**

TURN-AROUND TIME: _____ HOURS

5 DAYS

_____ OTHER

EMSL MANHATTAN LAB RECEIVED 19 MAR 26 AM 11:08

SAMPLE # LAB#	*LOCATION*	*SAMPLE DESCRIPTION*	*COMMENTS*
2382-41	Exterior, Window, Glass to Metal	Glazing	**Stop At First Office**
2382-42	Exterior, Window, Glass to Metal	Glazing	

CHAIN OF CUSTODY (SEE LAST PAGE)

SUBMITTED BY: _____ DATE: 3/25/2019

RECEIVED BY: _____ DATE: 3/26/19 11:08AM

PAGE 5 OF 5

FedEx

March 26,2019

Dear Customer:

The following is the proof-of-delivery for tracking number **795700640410**.

Delivery Information:

Status:	Delivered	**Delivered to:**	Receptionist/Front Desk
Signed for by:	S.HARDOW	**Delivery location:**	New York, NY
Service type:	FedEx Priority Overnight	**Delivery date:**	Mar 26, 2019 11:05
Special Handling:	Deliver Weekday		

Signature image is available. In order to view image and detailed information, the shipper or payor account number of the shipment must be provided.

Shipping Information:

Tracking number:	795700640410	**Ship date:**	Mar 25, 2019
		Weight:	1.0 lbs/0.5 kg

Recipient:
New York, NY US

Shipper:
Wappingers Falls, NY US

Reference ARL-WEB(A)
RMA QUES51

Thank you for choosing FedEx.

OrderID: 031906553

031906553

QUALITY ENVIRONMENTAL SOLUTIONS & TECHNOLOGIES, INC.

BULK SAMPLE FORM

CLIENT: **TOWN OF NEW WINDSOR**

ADDRESS: **555 UNION AVE**
NEW WINDSOR, NY 12553

CONTACT: **ANDREW WARREN**

PROJECT ID: **145 Caesar's Lane**
Main Building

PROJECT # : **Q19-2382**

SAMPLED BY: **J. Klemm/S. Talsma**

DATE SAMPLED: **25-Mar-19**

ANALYSIS METHOD: **PLM/PLM-NOB/QTEM as required**

TURN-AROUND TIME: _____ HOURS
5 DAYS
_____ OTHER

EMSL MANHATTAN LAB RECEIVED 19 MAR 26 AM 11:18

SAMPLE # LAB#	*LOCATION*	*SAMPLE DESCRIPTION*	*COMMENTS*
2382-01	Entry, Wall, on Sheetrock	Joint Compound	
2382-02	Entry, Partition Wall, on Sheetrock	Joint Compound	
2382-03	Mens Bathroom, Parititon Wall, on Sheetrock	Joint Compound	
2382-04	Reception Office, Partition Wall, on Sheetrock	Joint Compound	
2382-05	Maintence Area, Partition Wall, on Sheetrock	Joint Compound	
2382-06	Hallway Closet, Partition Wall, on Sheetrock	Joint Compound	
2382-07	Break Room, Perimeter Wall, on Sheetrock	Joint Compound	
2382-08	Mens Bathroom, Partition Wall	Sheetrock	**Stop At First Office**
2382-09	Reception Office, Partition Wall	Sheetrock	
2382-10	Locker Room, on Metal Pipe	Fiberglass Insulation (Confirmatory)	

CHAIN OF CUSTODY (SEE LAST PAGE)

SUBMITTED BY: _____ DATE: 3/25/2019

RECEIVED BY: _____ DATE: 3/26/19 11:09 AM

PAGE__1__OF__5__

3/31/19 6:17 am

OrderID: 031906553

031906553

QUALITY ENVIRONMENTAL SOLUTIONS & TECHNOLOGIES, INC.

BULK SAMPLE FORM

EMSL MANHATTAN LAB RECEIVED 19 MAR 26 AM 11:08

CLIENT: TOWN OF NEW WINDSOR

ADDRESS: 555 UNION AVE
NEW WINDSOR, NY 12553

CONTACT: ANDREW WARREN

PROJECT ID: 145 Caesar's Lane
Main Building

PROJECT # : Q19-2382

SAMPLED BY: J. Klemm/S. Talsma

DATE SAMPLED: 25-Mar-19

ANALYSIS METHOD: PLM/PLM-NOB/QTEM as required

TURN-AROUND TIME: _____ HOURS
5 DAYS
_____ OTHER

SAMPLE # LAB#	LOCATION	SAMPLE DESCRIPTION	COMMENTS
2382-11	Locker Room, Shower, Floor	Ceramic Tile, Grout & Mudset (Separate Layers)	
2382-12	Locker Room, Shower, Floor	Ceramic Tile, Grout & Mudset (Separate Layers)	
2382-13	Locker Room, Shower, Wall	Ceramic Tile & Grout (Separate Layers)	Stop At First Office
2382-14	Locker Room, Shower, Wall	Ceramic Tile & Grout (Separate Layers)	
2382-15	Locker Room, Shower, Wall, Behind Ceramic Tile, on CMU	Mortar	Stop At First Office
2382-16	Locker Room, Shower, Wall, Behind Ceramic Tile, on CMU	Mortar	
2382-17	Entry, Wall	Brick & Mortar (Separate Layers)	Stop At First Office
2382-18	Entry, Wall	Brick & Mortar (Separate Layers)	
2382-19	Separator Room, Partition Wall	Cementitious Block & Mortar (Separate Layers)	Stop At First Office
2382-20	Mens Bathroom, Perimeter Wall	Cementitious Block & Mortar (Separate Layers)	

CHAIN OF CUSTODY (SEE LAST PAGE)

SUBMITTED BY: [signature] DATE: 3/25/2019

RECEIVED BY: [signature] DATE: 3/26/19 11:07AM

PAGE 2 OF 5

RCH ~~3/13~~ 3/31

OrderID: 031906553

031906553

QUALITY ENVIRONMENTAL SOLUTIONS & TECHNOLOGIES, INC.

BULK SAMPLE FORM

EMSL MANHATTAN LAB
RECEIVED
19 MAR 26 AM 11:08

CLIENT: TOWN OF NEW WINDSOR
ADDRESS: 555 UNION AVE
NEW WINDSOR, NY 12553
CONTACT: ANDREW WARREN
PROJECT ID: 145 Caesar's Lane
Main Building
PROJECT # : Q19-2382

SAMPLED BY: J. Klemm/S. Talsma
DATE SAMPLED: 25-Mar-19
ANALYSIS METHOD: PLM/PLM-NOB/QTEM as required
TURN-AROUND TIME: _____ HOURS
5 DAYS
_____ OTHER

SAMPLE # LAB#	LOCATION	SAMPLE DESCRIPTION	COMMENTS
2382-21	Entry, Floor	Quarry Tile	Stop At First Office
2382-22	Maintence Room, Closet, Floor	Quarry Tile	
2382-23	Maintence Room, Closet, Floor, under Quarry Tile, on Slab	Mudset	Stop At First Office
2382-24	Entry, Floor, under Quarry Tile, on Slab	Mudset	
2382-25	Maintence Room, Closet, Floor, on Quarry Tile	Grout	Stop At First Office
2382-26	Entry, Floor, on Quarry Tile	Grout	
2382-27	Separator Room, Floor, Pad	Cementitious Slab	Stop At First Office
2382-28	Separator Room, Floor	Cementitious Slab	
2382-29	Mens Bathroom, Suspended Ceiling, 2' x 4', Dot Canyon	Ceiling Tile	Stop At First Office
2382-30	Reception Office, Suspended Ceiling, 2' x 4', Dot Canyon	Ceiling Tile	

CHAIN OF CUSTODY (SEE LAST PAGE)

SUBMITTED BY: _____ DATE: 3/25/2019

RECEIVED BY: _____ DATE: 3/26/19 11:08 Am

KRM 3/13

PAGE 3 OF 5

OrderID: 031906553

031906553

QUALITY ENVIRONMENTAL SOLUTIONS & TECHNOLOGIES, INC.

BULK SAMPLE FORM

EMSL MANHATTAN LAB
RECEIVED
19 MAR 26 AM 11:08

CLIENT: **TOWN OF NEW WINDSOR**
ADDRESS: **555 UNION AVE**
NEW WINDSOR, NY 12553
CONTACT: **ANDREW WARREN**
PROJECT ID: **145 Caesar's Lane**
Main Building
PROJECT # : **Q19-2382**

SAMPLED BY: **J. Klemm/S. Talsma**
DATE SAMPLED: **25-Mar-19**
ANALYSIS METHOD: **PLM/PLM-NOB/QTEM as required**
TURN-AROUND TIME: _____ HOURS
5 DAYS
_____ OTHER

SAMPLE # LAB#	*LOCATION*	*SAMPLE DESCRIPTION*	*COMMENTS*
2382-31	Reception Office, Wall, on Sheetrock	Cove Base Molding & Adhesive (Separate Layers)	**Stop At First Office**
2382-32	Lab, Wall, on Sheetrock	Cove Base Molding & Adhesive (Separate Layers)	
2382-33	Reception Office, Wall, on Sheetrock	Cove Base Molding & Adhesive (Separate Layers)	**Stop At First Office**
2382-34	Entry, Wall, on Sheetrock	Cove Base Molding & Adhesive (Separate Layers)	
2382-35	Break Room, Sink, on Metal	Anti Sweat Tar	**Stop At First Office**
2382-36	Break Room, Sink, on Metal	Anti Sweat Tar	
2382-37	Exterior, Entrance Door, Metal to Brick	Caulk	**Stop At First Office**
2382-38	Exterior, Entrance Door, Metal to Brick	Caulk	
2382-39	Exterior, Window, Brick to Metal	Caulk	**Stop At First Office**
2382-40	Exterior, Window, Brick to Metal	Caulk	

CHAIN OF CUSTODY (SEE LAST PAGE)

SUBMITTED BY: _____ DATE: 3/25/2019

RECEIVED BY: _____ DATE: 3/26/19 11:08AM

PAGE__4__OF__5__

OrderID: 031906553

031906553

QUALITY ENVIRONMENTAL SOLUTIONS & TECHNOLOGIES, INC.

BULK SAMPLE FORM

CLIENT: **TOWN OF NEW WINDSOR**

ADDRESS: **555 UNION AVE**
NEW WINDSOR, NY 12553

CONTACT: **ANDREW WARREN**

PROJECT ID: **145 Caesar's Lane**
Main Building

PROJECT # : **Q19-2382**

SAMPLED BY: **J. Klemm/S. Talsma**

DATE SAMPLED: **25-Mar-19**

ANALYSIS METHOD: **PLM/PLM-NOB/QTEM as required**

TURN-AROUND TIME: _____ HOURS
5 DAYS
_____ OTHER

EMSL MANHATTAN LAB
RECEIVED
19 MAR 26 AM 11:0

SAMPLE # LAB#	*LOCATION*	*SAMPLE DESCRIPTION*	*COMMENTS*
2382-41	Exterior, Window, Glass to Metal	Glazing	**Stop At First Office**
2382-42	Exterior, Window, Glass to Metal	Glazing	

CHAIN OF CUSTODY (SEE LAST PAGE)

SUBMITTED BY: _____ DATE: 3/25/2019

RECEIVED BY: _____ DATE: 3/26/19 11:05AM

PAGE__5__OF__5__

EMSL Analytical, Inc.

307 West 38th Street New York, NY 10018
Tel/Fax: (212) 290-0051 / (212) 290-0058
http://www.EMSL.com / manhattanlab@emsl.com

EMSL Order: 031910850
Customer ID: QUES51
Customer PO:
Project ID:

Attention: Quality Environmental Solution & Tech
1376 Route 9
Wappingers Falls, NY 12590

Phone: (845) 298-6031
Fax: (845) 298-6251
Received Date: 05/16/2019 11:22 AM
Analysis Date: 05/21/2019 - 05/22/2019
Collected Date: 05/15/2019

Project: Q19-2382A/ TOWN OF NEW WINDSOR 555 UNION AVE NEW WINDSOR NY 12553/ 145 CAESAR'S LANE MAIN BUILDING ROOF

Test Report:Asbestos Analysis of Bulk Material

Test	Analyzed Date	Color	Non-Asbestos Fibrous	Non-Asbestos Non-Fibrous	Asbestos
Sample ID 2382-63 *031910850-0001*		**Description**	ROOF, FIELD, TOP LAYER - EPDM		
		Homogeneity	Heterogeneous		
PLM NYS 198.1 Friable					**Not Analyzed**
PLM NYS 198.6 VCM					**Not Analyzed**
PLM NYS 198.6 NOB	05/21/2019	Black		100.00% Other	**Inconclusive: None Detected**
TEM NYS 198.4 NOB	05/22/2019	Black		100.00% Other	**None Detected**
Sample ID 2382-64 *031910850-0002*		**Description**	ROOF, EQUIPMENT FLASHING, TOP LAYER - EPDM		
		Homogeneity	Heterogeneous		
PLM NYS 198.1 Friable					**Not Analyzed**
PLM NYS 198.6 VCM					**Not Analyzed**
PLM NYS 198.6 NOB	05/21/2019	Black		100.00% Other	**Inconclusive: None Detected**
TEM NYS 198.4 NOB	05/22/2019	Black		100.00% Other	**None Detected**
Sample ID 2382-65 *031910850-0003*		**Description**	ROOF, FIELD, BOTTOM LAYER, ON METAL DECK - ISOFOAM		
		Homogeneity	Homogeneous		
PLM NYS 198.1 Friable Sample is foam.	05/22/2019	Yellow		100.00% Non-fibrous (other)	**None Detected**
PLM NYS 198.6 VCM					**Not Analyzed**
PLM NYS 198.6 NOB					**Not Analyzed**
TEM NYS 198.4 NOB					**Not Analyzed**
Sample ID 2382-66 *031910850-0004*		**Description**	ROOF, EQUIPMENT FLASHING, BOTTOM LAYER, ON METAL - ISOFOAM		
		Homogeneity	Homogeneous		
PLM NYS 198.1 Friable Sample is foam.	05/22/2019			100.00% Non-fibrous (other)	**None Detected**
PLM NYS 198.6 VCM					**Not Analyzed**
PLM NYS 198.6 NOB					**Not Analyzed**
TEM NYS 198.4 NOB					**Not Analyzed**
Sample ID 2382-67 *031910850-0005*		**Description**	ROOF, EQUIPMENT FLASHING, SECOND LAYER - GYPSUM		
		Homogeneity	Homogeneous		
PLM NYS 198.1 Friable	05/22/2019	Gray	15.00% Glass	60.00% Gypsum 25.00% Non-fibrous (other)	**None Detected**
PLM NYS 198.6 VCM					**Not Analyzed**
PLM NYS 198.6 NOB					**Not Analyzed**
TEM NYS 198.4 NOB					**Not Analyzed**

Initial report from: 05/22/2019 02:22:04

EMSL Analytical, Inc.
307 West 38th Street New York, NY 10018
Tel/Fax: (212) 290-0051 / (212) 290-0058
http://www.EMSL.com / manhattanlab@emsl.com

EMSL Order: 031910850
Customer ID: QUES51
Customer PO:
Project ID:

Test Report:Asbestos Analysis of Bulk Material

Test	Analyzed Date	Color	Non-Asbestos Fibrous	Non-Asbestos Non-Fibrous	Asbestos
Sample ID 2382-68 *031910850-0006*		**Description** ROOF, EQUIPMENT FLASHING, SECOND LAYER - GYPSUM **Homogeneity** Heterogeneous			
PLM NYS 198.1 Friable	05/22/2019	Gray/ White	20.00% Glass	60.00% Gypsum 20.00% Non-fibrous (other)	**None Detected**
PLM NYS 198.6 VCM					**Not Analyzed**
PLM NYS 198.6 NOB					**Not Analyzed**
TEM NYS 198.4 NOB					**Not Analyzed**
Sample ID 2382-69 *031910850-0007*		**Description** ROOF, VENT, METAL TO PVC PIPE - SEAM TAR **Homogeneity** Heterogeneous			
PLM NYS 198.1 Friable					**Not Analyzed**
PLM NYS 198.6 VCM					**Not Analyzed**
PLM NYS 198.6 NOB	05/21/2019	White/ Black		100.00% Other	**Inconclusive: None Detected**
TEM NYS 198.4 NOB	05/22/2019	White/ Black		100.00% Other	**None Detected**
Sample ID 2382-70 *031910850-0008*		**Description** ROOF, VENT, METAL TO PVC PIPE - SEAM TAR **Homogeneity** Heterogeneous			
PLM NYS 198.1 Friable					**Not Analyzed**
PLM NYS 198.6 VCM					**Not Analyzed**
PLM NYS 198.6 NOB	05/21/2019	Black		100.00% Other	**Inconclusive: None Detected**
TEM NYS 198.4 NOB	05/22/2019	Black		100.00% Other	**None Detected**
Sample ID 2382-71 *031910850-0009*		**Description** ROOF, EQUIPMENT FLASHING, BOTTOM LAYER, ON WOOD - TAR **Homogeneity** Heterogeneous			
PLM NYS 198.1 Friable					**Not Analyzed**
PLM NYS 198.6 VCM					**Not Analyzed**
PLM NYS 198.6 NOB	05/21/2019	Black	None	95.50% Other	**4.50% Chrysotile**
TEM NYS 198.4 NOB	05/21/2019				**Positive Stop (Not Analyzed)**
Sample ID 2382-72 *031910850-0010*		**Description** ROOF, EQUIPMENT FLASHING, BOTTOM LAYER, ON WOOD - TAR **Homogeneity**			
PLM NYS 198.1 Friable					**Not Analyzed**
PLM NYS 198.6 VCM					**Not Analyzed**
PLM NYS 198.6 NOB	05/21/2019				**Positive Stop (Not Analyzed)**
TEM NYS 198.4 NOB	05/21/2019				**Positive Stop (Not Analyzed)**
Sample ID 2382-73 *031910850-0011*		**Description** ROOF, CHIMNEY, TERMINATION BAR, METAL TO CMU - CAULK **Homogeneity** Heterogeneous			
PLM NYS 198.1 Friable					**Not Analyzed**
PLM NYS 198.6 VCM					**Not Analyzed**
PLM NYS 198.6 NOB	05/21/2019	Black		100.00% Other	**Inconclusive: None Detected**
TEM NYS 198.4 NOB	05/22/2019	Black		100.00% Other	**None Detected**

Initial report from: 05/22/2019 02:22:04

EMSL Analytical, Inc.
307 West 38th Street New York, NY 10018
Tel/Fax: (212) 290-0051 / (212) 290-0058
http://www.EMSL.com / manhattanlab@emsl.com

EMSL Order: 031910850
Customer ID: QUES51
Customer PO:
Project ID:

Test Report:Asbestos Analysis of Bulk Material

Test	Analyzed Date	Color	Non-Asbestos Fibrous	Non-Asbestos Non-Fibrous	Asbestos
Sample ID 2382-74 *031910850-0012*		**Description**	ROOF, CHIMNEY, TERMINATION BAR, METAL TO CMU - CAULK		
		Homogeneity	Heterogeneous		
PLM NYS 198.1 Friable					**Not Analyzed**
PLM NYS 198.6 VCM					**Not Analyzed**
PLM NYS 198.6 NOB	05/21/2019	Black		100.00% Other	**Inconclusive: None Detected**
TEM NYS 198.4 NOB	05/22/2019	Black		100.00% Other	**None Detected**
Sample ID 2382-75 *031910850-0013*		**Description**	UPPER ROOF, FAÇADE, METAL TO FIBERGLASS PANEL - CAULK		
		Homogeneity	Heterogeneous		
PLM NYS 198.1 Friable					**Not Analyzed**
PLM NYS 198.6 VCM					**Not Analyzed**
PLM NYS 198.6 NOB	05/21/2019	White		100.00% Other	**Inconclusive: None Detected**
TEM NYS 198.4 NOB	05/22/2019	White		100.00% Other	**None Detected**
Sample ID 2382-76 *031910850-0014*		**Description**	UPPER ROOF, FAÇADE, METAL TO FIBERGLASS PANEL - CAULK		
		Homogeneity	Heterogeneous		
PLM NYS 198.1 Friable					**Not Analyzed**
PLM NYS 198.6 VCM					**Not Analyzed**
PLM NYS 198.6 NOB	05/21/2019	White		100.00% Other	**Inconclusive: None Detected**
TEM NYS 198.4 NOB	05/22/2019	White		100.00% Other	**None Detected**
Sample ID 2382-77 *031910850-0015*		**Description**	OVERHANG, ROOF, TOP LAYER - SHINGLE		
		Homogeneity	Heterogeneous		
PLM NYS 198.1 Friable					**Not Analyzed**
PLM NYS 198.6 VCM					**Not Analyzed**
PLM NYS 198.6 NOB	05/21/2019	Black		100.00% Other	**Inconclusive: None Detected**
TEM NYS 198.4 NOB	05/22/2019	Black		100.00% Other	**None Detected**
Sample ID 2382-78 *031910850-0016*		**Description**	OVERHANG, ROOF, TOP LAYER - SHINGLE		
		Homogeneity	Heterogeneous		
PLM NYS 198.1 Friable					**Not Analyzed**
PLM NYS 198.6 VCM					**Not Analyzed**
PLM NYS 198.6 NOB	05/21/2019	Black		100.00% Other	**Inconclusive: None Detected**
TEM NYS 198.4 NOB	05/22/2019	Black		100.00% Other	**None Detected**
Sample ID 2382-79 *031910850-0017*		**Description**	OVERHANG, ROOF, BOTTOM LAYER, ON WOOD - VAPOR BARRIER		
		Homogeneity	Heterogeneous		
PLM NYS 198.1 Friable					**Not Analyzed**
PLM NYS 198.6 VCM					**Not Analyzed**
PLM NYS 198.6 NOB	05/21/2019	Black		100.00% Other	**Inconclusive: None Detected**
TEM NYS 198.4 NOB	05/22/2019	Black		100.00% Other	**None Detected**

Initial report from: 05/22/2019 02:22:04

EMSL Analytical, Inc.
307 West 38th Street New York, NY 10018
Tel/Fax: (212) 290-0051 / (212) 290-0058
http://www.EMSL.com / manhattanlab@emsl.com

EMSL Order: 031910850
Customer ID: QUES51
Customer PO:
Project ID:

Test Report:Asbestos Analysis of Bulk Material

Test	Analyzed Date	Color	Non-Asbestos Fibrous	Non-Asbestos Non-Fibrous	Asbestos
Sample ID 2382-80 *031910850-0018*		**Description**	OVERHANG, ROOF, BOTTOM LAYER, ON WOOD - VAPOR BARRIER		
		Homogeneity	Heterogeneous		
PLM NYS 198.1 Friable					**Not Analyzed**
PLM NYS 198.6 VCM					**Not Analyzed**
PLM NYS 198.6 NOB	05/21/2019	Black		100.00% Other	**Inconclusive: None Detected**
TEM NYS 198.4 NOB	05/22/2019	Black		100.00% Other	**None Detected**

Initial report from: 05/22/2019 02:22:04

EMSL Analytical, Inc.
307 West 38th Street New York, NY 10018
Tel/Fax: (212) 290-0051 / (212) 290-0058
http://www.EMSL.com / manhattanlab@emsl.com

EMSL Order:	031910850
Customer ID:	QUES51
Customer PO:	
Project ID:	

Test Report:Asbestos Analysis of Bulk Material

The samples in this report were submitted to EMSL for analysis by Asbestos Analysis of Bulk Materials via NYS ELAP Approved Methods . The reference number for these samples is the EMSL Order ID above. Please use this reference number when calling about these samples.

Report Comments:

Sample Receipt Date:	5/16/2019	Sample Receipt Time:	11:22 AM
Analysis Completed Date:	5/22/2019	Analysis Completed Time:	1:33 AM

Analyst(s):

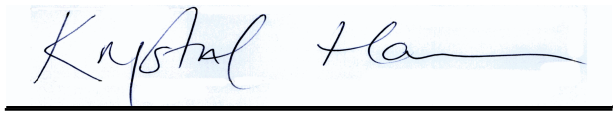

Krystal Harris PLM NYS 198.1 Friable (2)

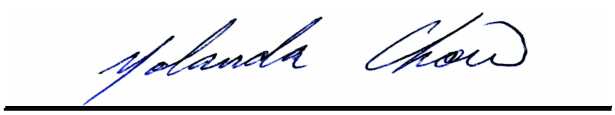

Yolanda Chow PLM NYS 198.1 Friable (2)



Chad Layne PLM NYS 198.6 NOB (13)



Steven Li TEM NYS 198.4 NOB (12)

Samples reviewed and approved by:



James Hall, Laboratory Manager
or Other Approved Signatory

NOB = Non Friable Organically Bound N/A = Not Applicable VCM = Vermiculite Containing Material

-In New York State, TEM is currently the only method that can be used to determine if NOB materials can be considered or treated as non -asbestos containing.
All samples examined for the presence of vermiculite when analyzed via NYS 198.1.
-NYS Guidelines for Vermiculite containing samples are available at http ://www.wadsworth.org/labcert/elapcert/forms/ VermiculiteInterimGuidance_Rev070913.pdf EMSL maintains liability limited to cost of analysis. This report relates only to the samples reported above and may not be reproduced, except in full, without written approval by EMSL. EMSL bears no responsibility for sample collection activities or analytical method limitations . Interpretation and use of test results are the responsibility of the client. Samples were received in good condition unless otherwise noted.
This report must not be used by the client to claim product certification, approval, or endorsement by NVLAP, NIST, or any agency of the federal government . This report may contain data that is not covered by the NVLAP accreditation.

Samples analyzed by EMSL Analytical, Inc. New York, NY NYS ELAP 11506

Initial report from: 05/22/2019 02:22:04

OrderID: 031910850

031910850

EMSL MANHATTAN LAB RECEIVED 19 MAY 16 AM 11:22

ESC 5/16/2019

QUALITY ENVIRONMENTAL SOLUTIONS & TECHNOLOGIES, INC.

BULK SAMPLE FORM

CLIENT: **TOWN OF NEW WINDSOR**

ADDRESS: **555 UNION AVE**

NEW WINDSOR, NY 12553

CONTACT: **ANDREW WARREN**

PROJECT ID: **145 Caesar's Lane**

Main Building Roof

PROJECT # : **Q19-2382A**

SAMPLED BY: **J. Klemm**

DATE SAMPLED: **15-May-19**

ANALYSIS METHOD: **PLM/PLM-NOB/QTEM as required**

TURN-AROUND TIME: _____ HOURS

5 DAYS

_____ OTHER

SAMPLE # LAB#	*LOCATION*	*SAMPLE DESCRIPTION*	*COMMENTS*
2382-63	Roof, Field, Top Layer	EPDM	**Stop At First Positive**
2382-64	Roof, Equipment Flashing, Top Layer	EPDM	
2382-65	Roof, Field, Bottom Layer, on Metal Deck	Isofoam	**Stop At First Positive**
2382-66	Roof, Equipment Flashing, Bottom Layer, on Metal	Isofoam	
2382-67	Roof, Equipment Flashing, Second Layer	Gypsum	**Stop At First Positive**
2382-68	Roof, Equipment Flashing, Second Layer	Gypsum	
2382-69	Roof, Vent, Metal to PVC Pipe	Seam Tar	**Stop At First Positive**
2382-70	Roof, Vent, Metal to PVC Pipe	Seam Tar	
2382-71	Roof, Equipment Flashing, Bottom Layer, on Wood	Tar	**Stop At First Positive**
2382-72	Roof, Equipment Flashing, Bottom Layer, on Wood	Tar	

CHAIN OF CUSTODY (SEE LAST PAGE)

SUBMITTED BY: _____ DATE: 5/15/2019 5-22-19

RECEIVED BY: _____ DATE: 5/16/19 11:22 AM

PAGE__1__OF__2__

OrderID: 031910850

031910850

EMSL MANHATTAN LAB RECEIVED 19 MAY 16 AM 11:22

QUALITY ENVIRONMENTAL SOLUTIONS & TECHNOLOGIES, INC.

BULK SAMPLE FORM

CLIENT: **TOWN OF NEW WINDSOR**

ADDRESS: **555 UNION AVE**

NEW WINDSOR, NY 12553

CONTACT: **ANDREW WARREN**

PROJECT ID: **145 Caesar's Lane**

Main Building Roof

PROJECT # : **Q19-2382A**

SAMPLED BY: **J. Klemm**

DATE SAMPLED: **15-May-19**

ANALYSIS METHOD: **PLM/PLM-NOB/QTEM as required**

TURN-AROUND TIME: _____ HOURS

5 DAYS

_____ OTHER

SAMPLE # LAB#	*LOCATION*	*SAMPLE DESCRIPTION*	*COMMENTS*
2382-73	Roof, Chimney, Termination Bar, Metal to CMU	Caulk	**Stop At First Positive**
2382-74	Roof, Chimney, Termination Bar, Metal to CMU	Caulk	
2382-75	Upper Roof, Façade, Metal to Fiberglass Panel	Caulk	**Stop At First Positive**
2382-76	Upper Roof, Façade, Metal to Fiberglass Panel	Caulk	
2382-77	Overhang, Roof, Top Layer	Shingle	**Stop At First Positive**
2382-78	Overhang, Roof, Top Layer	Shingle	
2382-79	Overhang, Roof, Bottom Layer, on Wood	Vapor Barrier	**Stop At First Positive**
2382-80	Overhang, Roof, Bottom Layer, on Wood	Vapor Barrier	

CHAIN OF CUSTODY (SEE LAST PAGE)

SUBMITTED BY: _____ DATE: 5/15/2019 5-22-19

RECEIVED BY: _____ DATE: 5/16/19 11:22AM

PAGE 2 OF 2

FedEx

795721783090

Delivered
Thursday 5/16/2019 at 11:15 am

DELIVERED

Signed for by: E.EMILLES

GET STATUS UPDATES

OBTAIN PROOF OF DELIVERY

FROM	TO
Wappingers Falls, NY US	New York, NY US

Shipment Facts

TRACKING NUMBER
795721783090

SERVICE
FedEx Priority Overnight

WEIGHT
1 lbs / 0.45 kgs

DELIVERED TO
Receptionist/Front Desk

TOTAL PIECES
1

TOTAL SHIPMENT WEIGHT
1 lbs / 0.45 kgs

TERMS
Shipper

RMA
QUES51

SHIPPER REFERENCE
ARL-WEB(A)

PACKAGING
Your Packaging

SPECIAL HANDLING SECTION
Deliver Weekday

STANDARD TRANSIT
5/16/2019 by 10:30 am

SHIP DATE
Wed 5/15/2019

ACTUAL DELIVERY
Thu 5/16/2019 11:15 am

Travel History

Local Scan Time

Thursday , 5/16/2019

11:15 am	New York, NY	Delivered
7:51 am	NEW YORK, NY	On FedEx vehicle for delivery
7:43 am	NEW YORK, NY	At local FedEx facility

OrderID: 031910850

031910850

EMSL MANHATTAN LAB
RECEIVED
19 MAY 16 AM 11:22

QUALITY ENVIRONMENTAL SOLUTIONS & TECHNOLOGIES, INC.

BULK SAMPLE FORM

CLIENT: TOWN OF NEW WINDSOR
ADDRESS: 555 UNION AVE
NEW WINDSOR, NY 12553
CONTACT: ANDREW WARREN
PROJECT ID: 145 Caesar's Lane
Main Building Roof
PROJECT # : Q19-2382A

SAMPLED BY: J. Klemm
DATE SAMPLED: 15-May-19
ANALYSIS METHOD: PLM/PLM-NOB/QTEM as required
TURN-AROUND TIME: _____ HOURS
5 DAYS
_____ OTHER

SAMPLE # LAB#	LOCATION	SAMPLE DESCRIPTION	COMMENTS
2382-63	Roof, Field, Top Layer	EPDM	Stop At First Positive
2382-64	Roof, Equipment Flashing, Top Layer	EPDM	
2382-65	Roof, Field, Bottom Layer, on Metal Deck	Isofoam	Stop At First Positive
2382-66	Roof, Equipment Flashing, Bottom Layer, on Metal	Isofoam	
2382-67	Roof, Equipment Flashing, Second Layer	Gypsum	Stop At First Positive
2382-68	Roof, Equipment Flashing, Second Layer	Gypsum	
2382-69	Roof, Vent, Metal to PVC Pipe	Seam Tar	Stop At First Positive
2382-70	Roof, Vent, Metal to PVC Pipe	Seam Tar	
2382-71	Roof, Equipment Flashing, Bottom Layer, on Wood	Tar	Stop At First Positive
2382-72	Roof, Equipment Flashing, Bottom Layer, on Wood	Tar	

CHAIN OF CUSTODY (SEE LAST PAGE)

YC 5/22/19

SUBMITTED BY: _____ DATE: 5/15/2019

RECEIVED BY: _____ DATE: 5/16/19 11:22AM

PAGE 1 OF 2

KAM 5/22

031910850

EMSL MANHATTAN LAB RECEIVED 19 MAY 16 AM 11:2

QUALITY ENVIRONMENTAL SOLUTIONS & TECHNOLOGIES, INC.

BULK SAMPLE FORM

CLIENT: TOWN OF NEW WINDSOR

ADDRESS: 555 UNION AVE
NEW WINDSOR, NY 12553

CONTACT: ANDREW WARREN

PROJECT ID: 145 Caesar's Lane
Main Building Roof

PROJECT # : Q19-2382A

SAMPLED BY: J. Klemm

DATE SAMPLED: 15-May-19

ANALYSIS METHOD: PLM/PLM-NOB/QTEM as required

TURN-AROUND TIME: ____ HOURS
5 DAYS
____ OTHER

SAMPLE # LAB#	LOCATION	SAMPLE DESCRIPTION	COMMENTS
2382-73	Roof, Chimney, Termination Bar, Metal to CMU	Caulk	Stop At First Positive
2382-74	Roof, Chimney, Termination Bar, Metal to CMU	Caulk	
2382-75	Upper Roof, Façade, Metal to Fiberglass Panel	Caulk	Stop At First Positive
2382-76	Upper Roof, Façade, Metal to Fiberglass Panel	Caulk	
2382-77	Overhang, Roof, Top Layer	Shingle	Stop At First Positive
2382-78	Overhang, Roof, Top Layer	Shingle	
2382-79	Overhang, Roof, Bottom Layer, on Wood	Vapor Barrier	Stop At First Positive
2382-80	Overhang, Roof, Bottom Layer, on Wood	Vapor Barrier	

CHAIN OF CUSTODY (SEE LAST PAGE)

YC 5/22/19

SUBMITTED BY: [signature] DATE: 5/15/2019

RECEIVED BY: [signature] DATE: 5/16/19 11:22 AM

PAGE 2 OF 2

KCM 5/22

FedEx

795721783090

Delivered
Thursday 5/16/2019 at 11:15 am

DELIVERED

Signed for by: E.EMILLES

GET STATUS UPDATES

OBTAIN PROOF OF DELIVERY

FROM	TO
Wappingers Falls, NY US	New York, NY US

Shipment Facts

TRACKING NUMBER 795721783090	**SERVICE** FedEx Priority Overnight	**WEIGHT** 1 lbs / 0.45 kgs
DELIVERED TO Receptionist/Front Desk	**TOTAL PIECES** 1	**TOTAL SHIPMENT WEIGHT** 1 lbs / 0.45 kgs
TERMS Shipper	**RMA** QUES51	**SHIPPER REFERENCE** ARL-WEB(A)
PACKAGING Your Packaging	**SPECIAL HANDLING SECTION** Deliver Weekday	**STANDARD TRANSIT** 5/16/2019 by 10:30 am
SHIP DATE Wed 5/15/2019	**ACTUAL DELIVERY** Thu 5/16/2019 11.15 am	

Travel History

Local Scan Time

Thursday , 5/16/2019

11:15 am	New York, NY	Delivered
7:51 am	NEW YORK, NY	On FedEx vehicle for delivery
7:43 am	NEW YORK, NY	At local FedEx facility

EMSL Analytical, Inc.
307 West 38th Street New York, NY 10018
Tel/Fax: (212) 290-0051 / (212) 290-0058
http://www.EMSL.com / manhattanlab@emsl.com

EMSL Order: 031906554
Customer ID: QUES51
Customer PO:
Project ID:

Attention: Quality Environmental Solution & Tech
1376 Route 9
Wappingers Falls, NY 12590

Phone: (845) 298-6031
Fax: (845) 298-6251
Received Date: 03/26/2019 11:06 AM
Analysis Date: 03/31/2019
Collected Date: 03/25/2019

Project: Q19-2382/ 145 CAESAR'S LANE, OUT BUILDING

Test Report:Asbestos Analysis of Bulk Material

Test	Analyzed Date	Color	Non-Asbestos Fibrous	Non-Asbestos Non-Fibrous	Asbestos
Sample ID 2382-43 *031906554-0001*		**Description** DOOR, INSIDE DOOR - INSULATION **Homogeneity** Homogeneous			
PLM NYS 198.1 Friable	03/31/2019	Brown	55.00% Cellulose	45.00% Non-fibrous (other)	**None Detected**
PLM NYS 198.6 VCM					**Not Analyzed**
PLM NYS 198.6 NOB					**Not Analyzed**
TEM NYS 198.4 NOB					**Not Analyzed**
Sample ID 2382-44 *031906554-0002*		**Description** DOOR, INSIDE DOOR - INSULATION **Homogeneity** Homogeneous			
PLM NYS 198.1 Friable	03/31/2019	Brown	75.00% Cellulose	25.00% Non-fibrous (other)	**None Detected**
PLM NYS 198.6 VCM					**Not Analyzed**
PLM NYS 198.6 NOB					**Not Analyzed**
TEM NYS 198.4 NOB					**Not Analyzed**
Sample ID 2382-45-Block *031906554-0003*		**Description** WALL - CEMENTITIOUS BLOCK & MORTAR **Homogeneity** Homogeneous			
PLM NYS 198.1 Friable	03/31/2019	Gray	3.00% Cellulose	25.00% Gypsum 17.00% Non-fibrous (other) 55.00% Quartz	**None Detected**
Inseparable paint / coating layer included in analysis					
PLM NYS 198.6 VCM					**Not Analyzed**
PLM NYS 198.6 NOB					**Not Analyzed**
TEM NYS 198.4 NOB					**Not Analyzed**
Sample ID 2382-45-Mortar *031906554-0003A*		**Description** WALL - CEMENTITIOUS BLOCK & MORTAR **Homogeneity** Homogeneous			
PLM NYS 198.1 Friable	03/31/2019	Gray		25.00% Ca Carbonate 25.00% Non-fibrous (other) 50.00% Quartz	**None Detected**
Inseparable paint / coating layer included in analysis					
PLM NYS 198.6 VCM					**Not Analyzed**
PLM NYS 198.6 NOB					**Not Analyzed**
TEM NYS 198.4 NOB					**Not Analyzed**

Initial report from: 03/31/2019 10:11:17

EMSL Analytical, Inc.
307 West 38th Street New York, NY 10018
Tel/Fax: (212) 290-0051 / (212) 290-0058
http://www.EMSL.com / manhattanlab@emsl.com

EMSL Order: 031906554
Customer ID: QUES51
Customer PO:
Project ID:

Test Report:Asbestos Analysis of Bulk Material

Test	Analyzed Date	Color	Non-Asbestos Fibrous	Non-Asbestos Non-Fibrous	Asbestos
Sample ID 2382-46-Block *031906554-0004*		**Description** WALL - CEMENTITIOUS BLOCK & MORTAR **Homogeneity** Homogeneous			
PLM NYS 198.1 Friable	03/31/2019	Gray		25.00% Ca Carbonate 40.00% Non-fibrous (other) 35.00% Quartz	**None Detected**
PLM NYS 198.6 VCM					**Not Analyzed**
PLM NYS 198.6 NOB					**Not Analyzed**
TEM NYS 198.4 NOB					**Not Analyzed**
Sample ID 2382-46-Mortar *031906554-0004A*		**Description** WALL - CEMENTITIOUS BLOCK & MORTAR **Homogeneity** Homogeneous			
PLM NYS 198.1 Friable	03/31/2019	Gray		25.00% Ca Carbonate 22.00% Gypsum 18.00% Non-fibrous (other) 35.00% Quartz	**None Detected**
PLM NYS 198.6 VCM					**Not Analyzed**
PLM NYS 198.6 NOB					**Not Analyzed**
TEM NYS 198.4 NOB					**Not Analyzed**
Sample ID 2382-47-Brick *031906554-0005*		**Description** EXTERIOR, FAÇADE - BRICK & MORTAR **Homogeneity** Homogeneous			
PLM NYS 198.1 Friable	03/31/2019	Brown/ Red		85.00% Non-fibrous (other) 15.00% Quartz	**None Detected**
PLM NYS 198.6 VCM					**Not Analyzed**
PLM NYS 198.6 NOB					**Not Analyzed**
TEM NYS 198.4 NOB					**Not Analyzed**
Sample ID 2382-47-Mortar *031906554-0005A*		**Description** EXTERIOR, FAÇADE - BRICK & MORTAR **Homogeneity** Homogeneous			
PLM NYS 198.1 Friable	03/31/2019	Gray		25.00% Ca Carbonate 25.00% Non-fibrous (other) 50.00% Quartz	**None Detected**
PLM NYS 198.6 VCM					**Not Analyzed**
PLM NYS 198.6 NOB					**Not Analyzed**
TEM NYS 198.4 NOB					**Not Analyzed**
Sample ID 2382-48-Brick *031906554-0006*		**Description** EXTERIOR, FAÇADE - BRICK & MORTAR **Homogeneity** Homogeneous			
PLM NYS 198.1 Friable	03/31/2019	Red		90.00% Non-fibrous (other) 10.00% Quartz	**None Detected**
PLM NYS 198.6 VCM					**Not Analyzed**
PLM NYS 198.6 NOB					**Not Analyzed**
TEM NYS 198.4 NOB					**Not Analyzed**

Initial report from: 03/31/2019 10:11:17

EMSL Analytical, Inc.
307 West 38th Street New York, NY 10018
Tel/Fax: (212) 290-0051 / (212) 290-0058
http://www.EMSL.com / manhattanlab@emsl.com

EMSL Order: 031906554
Customer ID: QUES51
Customer PO:
Project ID:

Test Report:Asbestos Analysis of Bulk Material

Test	Analyzed Date	Color	Non-Asbestos Fibrous	Non-Asbestos Non-Fibrous	Asbestos
Sample ID 2382-48-Mortar *031906554-0006A*		**Description** EXTERIOR, FAÇADE - BRICK & MORTAR **Homogeneity** Homogeneous			
PLM NYS 198.1 Friable	03/31/2019	Gray		25.00% Ca Carbonate 40.00% Non-fibrous (other) 35.00% Quartz	**None Detected**
PLM NYS 198.6 VCM					**Not Analyzed**
PLM NYS 198.6 NOB					**Not Analyzed**
TEM NYS 198.4 NOB					**Not Analyzed**
Sample ID 2382-49 *031906554-0007*		**Description** FLOOR - CEMENTITIOUS SLAB **Homogeneity** Homogeneous			
PLM NYS 198.1 Friable	03/31/2019	Brown/ Gray		20.00% Ca Carbonate 25.00% Non-fibrous (other) 55.00% Quartz	**None Detected**
PLM NYS 198.6 VCM					**Not Analyzed**
PLM NYS 198.6 NOB					**Not Analyzed**
TEM NYS 198.4 NOB					**Not Analyzed**
Sample ID 2382-50 *031906554-0008*		**Description** FLOOR - CEMENTITIOUS SLAB **Homogeneity** Homogeneous			
PLM NYS 198.1 Friable	03/31/2019	Brown/ Gray		55.00% Non-fibrous (other) 45.00% Quartz	**None Detected**
PLM NYS 198.6 VCM					**Not Analyzed**
PLM NYS 198.6 NOB					**Not Analyzed**
TEM NYS 198.4 NOB					**Not Analyzed**
Sample ID 2382-51 *031906554-0009*		**Description** ROOF, BOTTOM LAYER, ON METAL - PERLITE **Homogeneity** Homogeneous			
PLM NYS 198.1 Friable	03/31/2019	Brown	45.00% Cellulose	40.00% Non-fibrous (other) 15.00% Perlite	**None Detected**
PLM NYS 198.6 VCM					**Not Analyzed**
PLM NYS 198.6 NOB					**Not Analyzed**
TEM NYS 198.4 NOB					**Not Analyzed**
Sample ID 2382-52 *031906554-0010*		**Description** ROOF, BOTTOM LAYER, ON METAL - PERLITE **Homogeneity** Homogeneous			
PLM NYS 198.1 Friable	03/31/2019	Brown	55.00% Cellulose	25.00% Non-fibrous (other) 20.00% Perlite	**None Detected**
PLM NYS 198.6 VCM					**Not Analyzed**
PLM NYS 198.6 NOB					**Not Analyzed**
TEM NYS 198.4 NOB					**Not Analyzed**
Sample ID 2382-53 *031906554-0011*		**Description** EXTERIOR, WINDOW, METAL TO GLASS - GLAZING **Homogeneity** Heterogeneous			
PLM NYS 198.1 Friable					**Not Analyzed**
PLM NYS 198.6 VCM					**Not Analyzed**
PLM NYS 198.6 NOB	03/31/2019	Gray	None	100.00% Other	**Inconclusive : <1.00% Anthophyllite**
TEM NYS 198.4 NOB	03/31/2019	Gray	None	100.00% Other	**<1.00% Anthophyllite**

Initial report from: 03/31/2019 10:11:17

EMSL Analytical, Inc.
307 West 38th Street New York, NY 10018
Tel/Fax: (212) 290-0051 / (212) 290-0058
http://www.EMSL.com / manhattanlab@emsl.com

EMSL Order: 031906554
Customer ID: QUES51
Customer PO:
Project ID:

Test Report:Asbestos Analysis of Bulk Material

Test	Analyzed Date	Color	Non-Asbestos Fibrous	Non-Asbestos Non-Fibrous	Asbestos
Sample ID 2382-54 *031906554-0012*		**Description**	EXTERIOR, WINDOW, METAL TO GLASS - GLAZING		
		Homogeneity	Heterogeneous		
PLM NYS 198.1 Friable					**Not Analyzed**
PLM NYS 198.6 VCM					**Not Analyzed**
PLM NYS 198.6 NOB	03/31/2019	Gray	None	100.00% Other	**Inconclusive : <1.00% Anthophyllite**
TEM NYS 198.4 NOB	03/31/2019	Gray	None	100.00% Other	**<1.00% Anthophyllite**
Sample ID 2382-55 *031906554-0013*		**Description**	ROOF, TOP LAYER - ROLLED ROOFING		
		Homogeneity	Heterogeneous		
PLM NYS 198.1 Friable					**Not Analyzed**
PLM NYS 198.6 VCM					**Not Analyzed**
PLM NYS 198.6 NOB	03/31/2019	Black		100.00% Other	**Inconclusive: None Detected**
TEM NYS 198.4 NOB	03/31/2019	Black		100.00% Other	**None Detected**
Sample ID 2382-56 *031906554-0014*		**Description**	ROOF, TOP LAYER - ROLLED ROOFING		
		Homogeneity	Heterogeneous		
PLM NYS 198.1 Friable					**Not Analyzed**
PLM NYS 198.6 VCM					**Not Analyzed**
PLM NYS 198.6 NOB	03/31/2019	Black		100.00% Other	**Inconclusive: None Detected**
TEM NYS 198.4 NOB	03/31/2019	Black		100.00% Other	**None Detected**
Sample ID 2382-57 *031906554-0015*		**Description**	ROOF, SECOND LAYER - TAR VAPOR BARRIER		
		Homogeneity	Heterogeneous		
PLM NYS 198.1 Friable					**Not Analyzed**
PLM NYS 198.6 VCM					**Not Analyzed**
PLM NYS 198.6 NOB	03/31/2019	Black	None	93.10% Other	**6.90% Chrysotile**
TEM NYS 198.4 NOB	03/31/2019				**Positive Stop (Not Analyzed)**
Sample ID 2382-58 *031906554-0016*		**Description**	ROOF, SECOND LAYER - TAR VAPOR BARRIER		
		Homogeneity			
PLM NYS 198.1 Friable					**Not Analyzed**
PLM NYS 198.6 VCM					**Not Analyzed**
PLM NYS 198.6 NOB	03/31/2019				**Positive Stop (Not Analyzed)**
TEM NYS 198.4 NOB	03/31/2019				**Positive Stop (Not Analyzed)**
Sample ID 2382-59 *031906554-0017*		**Description**	ROOF, PERIMETER FLASHING, ON METAL - VAPOR BARRIER		
		Homogeneity	Heterogeneous		
PLM NYS 198.1 Friable					**Not Analyzed**
PLM NYS 198.6 VCM					**Not Analyzed**
PLM NYS 198.6 NOB	03/31/2019	Black	None	95.10% Other	**4.90% Chrysotile**
TEM NYS 198.4 NOB	03/31/2019				**Positive Stop (Not Analyzed)**

Initial report from: 03/31/2019 10:11:17

EMSL Analytical, Inc.
307 West 38th Street New York, NY 10018
Tel/Fax: (212) 290-0051 / (212) 290-0058
http://www.EMSL.com / manhattanlab@emsl.com

EMSL Order: 031906554
Customer ID: QUES51
Customer PO:
Project ID:

Test Report:Asbestos Analysis of Bulk Material

Test	Analyzed Date	Color	Non-Asbestos Fibrous	Non-Asbestos Non-Fibrous	Asbestos
Sample ID 2382-60 *031906554-0018*		**Description**	ROOF, PERIMETER FLASHING, ON METAL - VAPOR BARRIER		
		Homogeneity			
PLM NYS 198.1 Friable					**Not Analyzed**
PLM NYS 198.6 VCM					**Not Analyzed**
PLM NYS 198.6 NOB	03/31/2019				**Positive Stop (Not Analyzed)**
TEM NYS 198.4 NOB	03/31/2019				**Positive Stop (Not Analyzed)**
Sample ID 2382-61 *031906554-0019*		**Description**	EXTERIOR, FOUNDATION WALL - WATERPROOFING TAR		
		Homogeneity	Heterogeneous		
PLM NYS 198.1 Friable					**Not Analyzed**
PLM NYS 198.6 VCM					**Not Analyzed**
PLM NYS 198.6 NOB	03/31/2019	Black		100.00% Other	**Inconclusive: None Detected**
TEM NYS 198.4 NOB	03/31/2019	Black		100.00% Other	**None Detected**
Sample ID 2382-62 *031906554-0020*		**Description**	EXTERIOR, FOUNDATION WALL - WATERPROOFING TAR		
		Homogeneity	Heterogeneous		
PLM NYS 198.1 Friable					**Not Analyzed**
PLM NYS 198.6 VCM					**Not Analyzed**
PLM NYS 198.6 NOB	03/31/2019	Black		100.00% Other	**Inconclusive: None Detected**
TEM NYS 198.4 NOB	03/31/2019	Black		100.00% Other	**None Detected**

Initial report from: 03/31/2019 10:11:17

EMSL Analytical, Inc.
307 West 38th Street New York, NY 10018
Tel/Fax: (212) 290-0051 / (212) 290-0058
http://www.EMSL.com / manhattanlab@emsl.com

EMSL Order:	031906554
Customer ID:	QUES51
Customer PO:	
Project ID:	

Test Report:Asbestos Analysis of Bulk Material

The samples in this report were submitted to EMSL for analysis by Asbestos Analysis of Bulk Materials via NYS ELAP Approved Methods . The reference number for these samples is the EMSL Order ID above. Please use this reference number when calling about these samples.

Report Comments:

Sample Receipt Date:	3/26/2019	Sample Receipt Time:	11:06 AM
Analysis Completed Date:	3/31/2019	Analysis Completed Time:	7:16 PM

Analyst(s):

Krystal Harris PLM NYS 198.1 Friable (7)

Tiquasha Thompson PLM NYS 198.1 Friable (7)

Shahrakur Mahmud PLM NYS 198.6 NOB (8)

Hongyan Ran TEM NYS 198.4 NOB (6)

Samples reviewed and approved by:

James Hall, Laboratory Manager
or Other Approved Signatory

NOB = Non Friable Organically Bound N/A = Not Applicable VCM = Vermiculite Containing Material

-In New York State, TEM is currently the only method that can be used to determine if NOB materials can be considered or treated as non -asbestos containing.
All samples examined for the presence of vermiculite when analyzed via NYS 198.1.
-NYS Guidelines for Vermiculite containing samples are available at http ://www.wadsworth.org/labcert/elapcert/forms/ VermiculiteInterimGuidance_Rev070913.pdf EMSL maintains liability limited to cost of analysis. This report relates only to the samples reported above and may not be reproduced, except in full, without written approval by EMSL. EMSL bears no responsibility for sample collection activities or analytical method limitations . Interpretation and use of test results are the responsibility of the client. Samples were received in good condition unless otherwise noted.
This report must not be used by the client to claim product certification, approval, or endorsement by NVLAP, NIST, or any agency of the federal government . This report may contain data that is not covered by the NVLAP accreditation.

Samples analyzed by EMSL Analytical, Inc. New York, NY NYS ELAP 11506

Initial report from: 03/31/2019 10:11:17

OrderID: 031906554

031906554

QUALITY ENVIRONMENTAL SOLUTIONS & TECHNOLOGIES, INC.

BULK SAMPLE FORM

EMSL MANHATTAN LAB RECEIVED 19 MAR 26 A 11:06

CLIENT: **TOWN OF NEW WINDSOR**

ADDRESS: **555 UNION AVE**
NEW WINDSOR, NY 12553

CONTACT: **ANDREW WARREN**

PROJECT ID: **145 Caesar's Lane**
Out Building

PROJECT # : **Q19-2382**

SAMPLED BY: **J. Klemm/S. Talsma**

DATE SAMPLED: **25-Mar-19**

ANALYSIS METHOD: **PLM/PLM-NOB/QTEM as required**

TURN-AROUND TIME: _____ HOURS
5 DAYS
_____ OTHER

SAMPLE # LAB#	*LOCATION*	*SAMPLE DESCRIPTION*	*COMMENTS*
2382-43	Door, Inside Door	Insulation	**Stop At First Positive**
2382-44	Door, Inside Door	Insulation	
2382-45	Wall	Cementitious Block & Mortar (Separate Layers)	**Stop At First Positive**
2382-46	Wall	Cementitious Block & Mortar (Separate Layers)	
2382-47	Exterior, Façade	Brick & Mortar (Separate Layers)	**Stop At First Positive**
2382-48	Exterior, Façade	Brick & Mortar (Separate Layers)	
2382-49	Floor	Cementitious Slab	**Stop At First Positive**
2382-50	Floor	Cementitious Slab	
2382-51	Roof, Bottom Layer, on Metal	Perlite	**Stop At First Positive**
2382-52	Roof, Bottom Layer, on Metal	Perlite	

CHAIN OF CUSTODY (SEE LAST PAGE)

SUBMITTED BY: _____ DATE: 3/25/2019

RECEIVED BY: _____ DATE: 3/26/19 11:06AM

PAGE 1 OF 2

3/31/19 4:40pm

HR 3/31/19 10:25AM

OrderID: 031906554

031906554

QUALITY ENVIRONMENTAL SOLUTIONS & TECHNOLOGIES, INC.

EMSL MANHATTAN LAB RECEIVED 19 MAR 26 AM 11:0

BULK SAMPLE FORM

CLIENT: **TOWN OF NEW WINDSOR**

ADDRESS: **555 UNION AVE**

NEW WINDSOR, NY 12553

CONTACT: **ANDREW WARREN**

PROJECT ID: **145 Caesar's Lane-Pre-Demolition/ Pre-Renovation ASB Survey**

PROJECT # : **Q19-2382**

SAMPLED BY: **J. Klemm/S. Talsma**

DATE SAMPLED: **25-Mar-19**

ANALYSIS METHOD: **PLM/PLM-NOB/QTEM as required**

TURN-AROUND TIME: _____ HOURS

5 DAYS

_____ OTHER

SAMPLE # LAB#	*LOCATION*	*SAMPLE DESCRIPTION*	*COMMENTS*
2382-53	Exterior, Window, Metal to Glass	Glazing	**Stop At First Positive**
2382-54	Exterior, Window, Metal to Glass	Glazing	
2382-55	Roof, Top Layer	Rolled Roofing	**Stop At First Positive**
2382-56	Roof, Top Layer	Rolled Roofing	
2382-57	Roof, Second Layer	Tar Vapor Barrier	**Stop At First Positive**
2382-58	Roof, Second Layer	Tar Vapor Barrier	
2382-59	Roof, Perimeter Flashing, on Metal	Vapor Barrier	**Stop At First Positive**
2382-60	Roof, Perimeter Flashing, on Metal	Vapor Barrier	
2382-61	Exterior, Foundation Wall	Water Proofing Tar	**Stop At First Positive**
2382-62	Exterior, Foundation Wall	Water Proofing Tar	

CHAIN OF CUSTODY (SEE LAST PAGE)

SUBMITTED BY: _____ DATE: 3/25/2019

RECEIVED BY: _____ DATE: 3/26/19 11:06 AM

PAGE 2 OF 2

HR 3/31/19

OrderID: 031906554

031906554

QUALITY ENVIRONMENTAL SOLUTIONS & TECHNOLOGIES, INC.

BULK SAMPLE FORM

ENSL MARYLAND LAB RECEIVED 19 MAR 25 AM 11:06

CLIENT: **TOWN OF NEW WINDSOR**

ADDRESS: **555 UNION AVE**
NEW WINDSOR, NY 12553

CONTACT: **ANDREW WARREN**

PROJECT ID: **145 Caesar's Lane**
Out Building

PROJECT # : **Q19-2382**

SAMPLED BY: **J. Klemm/S. Talsma**

DATE SAMPLED: **25-Mar-19**

ANALYSIS METHOD: **PLM/PLM-NOB/QTEM as required**

TURN-AROUND TIME: _____ HOURS
5 DAYS
_____ OTHER

SAMPLE # LAB#	*LOCATION*	*SAMPLE DESCRIPTION*	*COMMENTS*
2382-43	Door, Inside Door	Insulation	Stop At First Positive
2382-44	Door, Inside Door	Insulation	
2382-45	Wall	Cementitious Block & Mortar (Separate Layers)	Stop At First Positive
2382-46	Wall	Cementitious Block & Mortar (Separate Layers)	
2382-47	Exterior, Façade	Brick & Mortar (Separate Layers)	Stop At First Positive
2382-48	Exterior, Façade	Brick & Mortar (Separate Layers)	
2382-49	Floor	Cementitious Slab	Stop At First Positive
2382-50	Floor	Cementitious Slab	
2382-51	Roof, Bottom Layer, on Metal	Perlite	Stop At First Positive
2382-52	Roof, Bottom Layer, on Metal	Perlite	

CHAIN OF CUSTODY (SEE LAST PAGE)

SUBMITTED BY: _____ DATE: 3/25/2019

RECEIVED BY: _____ DATE: 3/26/19 11:06AM

PAGE 1 OF 2

5/31/19 11:24 PM

3/31

OrderID: 031906554

031906554

QUALITY ENVIRONMENTAL SOLUTIONS & TECHNOLOGIES, INC.

EMSL MANHATTAN
RECEIVED
19 MAR 26 AM 11:0

BULK SAMPLE FORM

CLIENT: **TOWN OF NEW WINDSOR**
ADDRESS: **555 UNION AVE**
NEW WINDSOR, NY 12553
CONTACT: **ANDREW WARREN**
PROJECT ID: **145 Caesar's Lane-Pre-Demolition/ Pre-Renovation ASB Survey**
PROJECT # : **Q19-2382**

SAMPLED BY: **J. Klemm/S. Talsma**
DATE SAMPLED: **25-Mar-19**
ANALYSIS METHOD: **PLM/PLM-NOB/QTEM as required**
TURN-AROUND TIME: _____ HOURS
5 DAYS
_____ OTHER

SAMPLE # LAB#	*LOCATION*	*SAMPLE DESCRIPTION*	*COMMENTS*
2382-53	Exterior, Window, Metal to Glass	Glazing	**Stop At First Positive**
2382-54	Exterior, Window, Metal to Glass	Glazing	
2382-55	Roof, Top Layer	Rolled Roofing	**Stop At First Positive**
2382-56	Roof, Top Layer	Rolled Roofing	
2382-57	Roof, Second Layer	Tar Vapor Barrier	**Stop At First Positive**
2382-58	Roof, Second Layer	Tar Vapor Barrier	
2382-59	Roof, Perimeter Flashing, on Metal	Vapor Barrier	**Stop At First Positive**
2382-60	Roof, Perimeter Flashing, on Metal	Vapor Barrier	
2382-61	Exterior, Foundation Wall	Water Proofing Tar	**Stop At First Positive**
2382-62	Exterior, Foundation Wall	Water Proofing Tar	

CHAIN OF CUSTODY (SEE LAST PAGE)

SUBMITTED BY: _____ DATE: 3/25/2019

RECEIVED BY: _____ DATE: 3/26/19 11:06 AM

PAGE 2 OF 2

OrderID: 031906554

March 26,2019

Dear Customer:

The following is the proof-of-delivery for tracking number **795700640410**.

Delivery Information:

Status:	Delivered	**Delivered to:**	Receptionist/Front Desk
Signed for by:	S.HARDOW	**Delivery location:**	New York, NY
Service type:	FedEx Priority Overnight	**Delivery date:**	Mar 26, 2019 11:05
Special Handling:	Deliver Weekday		

Signature image is available. In order to view image and detailed information, the shipper or payor account number of the shipment must be provided.

Shipping Information:

Tracking number:	795700640410	**Ship date:**	Mar 25, 2019
		Weight:	1.0 lbs/0.5 kg

Recipient:
New York, NY US

Shipper:
Wappingers Falls, NY US

Reference ARL-WEB(A)
RMA QUES51

Thank you for choosing FedEx.

Appendix C:
PERSONNEL LICENSES & CERTIFICATIONS

NEW YORK STATE DEPARTMENT OF HEALTH
WADSWORTH CENTER

Expires 12:01 AM April 01, 2019
Issued April 01, 2018

CERTIFICATE OF APPROVAL FOR LABORATORY SERVICE

Issued in accordance with and pursuant to section 502 Public Health Law of New York State

MR. JAMES HALL
EMSL ANALYTICAL, INC
307 WEST 38TH STREET SUITE 901
NEW YORK, NY 10018

NY Lab Id No: 11506

is hereby APPROVED as an Environmental Laboratory for the category
ENVIRONMENTAL ANALYSES SOLID AND HAZARDOUS WASTE
All approved subcategories and/or analytes are listed below:

Miscellaneous

Asbestos in Friable Material	Item 198.1 of Manual
	EPA 600/M4/82/020
Asbestos in Non-Friable Material-PLM	Item 198.6 of Manual (NOB by PLM)
Asbestos in Non-Friable Material-TEM	Item 198.4 of Manual
Asbestos-Vermiculite-Containing Material	Item 198.8 of Manual
Lead in Dust Wipes	EPA 7000B
Lead in Paint	EPA 7000B

Sample Preparation Methods

	EPA 3051A

Serial No.: 57819

Property of the New York State Department of Health. Certificates are valid only at the address shown, must be conspicuously posted, and are printed on secure paper. Continued accreditation depends on successful ongoing participation in the Program. Consumers are urged to call (518) 485-5570 to verify the laboratory's accreditation status.

New York State – Department of Labor
Division of Safety and Health
License and Certificate Unit
State Campus, Building 12
Albany, NY 12240

ASBESTOS HANDLING LICENSE

Quality Environmental Solutions & Technologies, Inc.

1376 Route 9

Wappinger Falls, NY 12590

FILE NUMBER: 99-0018
LICENSE NUMBER: 29085
LICENSE CLASS: RESTRICTED
DATE OF ISSUE: 01/03/2019
EXPIRATION DATE: 01/31/2020

Duly Authorized Representative – Lawrence J Holzapfel:

This license has been issued in accordance with applicable provisions of Article 30 of the Labor Law of New York State and of the New York State Codes, Rules and Regulations (12 NYCRR Part 56). It is subject to suspension or revocation for a (1) serious violation of state, federal or local laws with regard to the conduct of an asbestos project, or (2) demonstrated lack of responsibility in the conduct of any job involving asbestos or asbestos material.

This license is valid only for the contractor named above and this license or a photocopy must be prominently displayed at the asbestos project worksite. This license verifies that all persons employed by the licensee on an asbestos project in New York State have been issued an Asbestos Certificate, appropriate for the type of work they perform, by the New York State Department of Labor.

Eileen M. Franko, Director
For the Commissioner of Labor

SH 432 (8/12)

NEW YORK STATE

MINORITY- AND WOMEN-OWNED BUSINESS ENTERPRISE ("MWBE")

CERTIFICATION

Empire State Development's Division of Minority and Women's Business Development grants a

Minority Business Enterprise (MBE)

pursuant to New York State Executive Law, Article 15-A to:

Quality Environmental Solutions & Technologies Inc.

Certification Awarded on: August 11, 2015
Expiration Date: August 11, 2018
File ID#: 49952

NEW YORK STATE OF OPPORTUNITY. Division of Minority and Women's Business Development

A Division of Empire State Development

Suann Lander

From: Davis, Jamon (ESD) <Jamon.Davis@esd.ny.gov>
Sent: Wednesday, July 11, 2018 11:36 AM
To: Suann Lander
Subject: Quality Environmental Solutions & Technologies Inc.

To Whom It May Concern;

Please note that **Quality Environmental Solutions & Technologies Inc.** applied for Certification on **4/21/2017**. Their current Certification is **still pending** until **the final decision is made**. Due to our re-certification policy, their certification remains active. If his/her certification is approved they will remain in our database as active and can continue to conduct business as usual. To check their active status please go to our website at **https//ny.newnycontracts.com;** click the **SEARCH THE DIRECTORY** button and input the name of their business. The firm's status will appear at the **bottom of the page**. If you see the business name at the bottom of the page, this means it is **active**. Please feel free to contact the **MWBE Help Desk at 212-803-2414**, if you should need further assistance.

Best regards,

Jamon Davis

JAMON DAVIS
Certifications Specialist
633 3rd Avenue New York, NY 11017
Website Email

IMPORTANT: This e-mail message and any attachments contain information intended for the exclusive use of the individual(s) or entity to whom it is addressed and may contain information that is proprietary, privileged, confidential and/or exempt from disclosure under applicable law. If you are not the intended recipient, you are hereby notified that any viewing, copying, disclosure or distribution of this information may be subject to legal restriction or sanction. Please immediately notify the sender by electronic mail or notify the System Administrator by telephone (518)292-5180 or e-mail (administrator@esd.ny.gov) and delete the message. Thank you.

STATE OF NEW YORK - DEPARTMENT OF LABOR
ASBESTOS CERTIFICATE

N.Y.S



JAMES D KLEMM
CLASS(EXPIRES)
C ATEC(06/19) D INSP(06/19)
H PM (06/19)

CERT# 13-11486
DMV# 949876493

MUST BE CARRIED ON ASBESTOS PROJECTS

01213 004635662 22

EYES BLU
HAIR BRO
HGT 5' 10"

IF FOUND RETURN TO:
NYSDOL - L&C UNIT
ROOM 161A BUILDING 12
STATE OFFICE CAMPUS
ALBANY NY 12240

SHA Occupational Safety and Health Administration

12-004336042

s card acknowledges that the recipient has successfully completed a
10-hour Occupational Safety and Health Training Course in
Construction Safety and Health

JAMES KLEMM

David Veit — 06/05/2013

ner name – print or type) — (Course end date)

)SHA recommends Outreach Training Courses as an orientation to occupational safety nd health for workers. Participation is voluntary. Workers must receive additional raining on specific hazards of their job. This course completion card does not expire.

Jse or distribution of this card for fraudulent purposes, including false claims of having eceived training, may result in prosecution under 18 U.S.C. 1001. Potential penalties nclude substantial criminal fines, imprisonment up to five years, or both.

or OSHA Outreach Training Program go to "Training" at www.osha.gov

Rev. 9/2009

STATE OF NEW YORK - DEPARTMENT OF LABOR
ASBESTOS CERTIFICATE

N.Y.S



SHANNON D TALSMA
CLASS(EXPIRES)
C ATEC(10/19) D INSP(10/19)
H PM (10/19)

CERT# 16-07559
DMV# 963348232

MUST BE CARRIED ON ASBESTOS PROJECTS

01213 004735847 85

EYES GRN
HAIR BLN
HGT 6' 00"

IF FOUND RETURN TO:
NYSDOL - L&C UNIT
ROOM 161A BUILDING 12
STATE OFFICE CAMPUS
ALBANY NY 12240

OSHA
Occupational Safety and Health Administration

12-006010504

This card acknowledges that the recipient has successfully completed:

10-hour Construction Safety and Health

This card issued to:

Shannon D. Talsma

David Veit — Trainer Name

04/22/2016 — Date of Issue

Atlantic OSHA Training Center
An Authorized OSHA Training Institute Education Center

732.235.9450
aotc.sph.rutgers.edu

OSHA recommends Outreach Training Courses as an orientation to occupational safety and health for workers. Participation is voluntary. Workers must receive additional training on specific hazards of their job. This course completion card does not expire.

Use or distribution of this card for fraudulent purposes, including false claims of having received training, may result in prosecution under 18 U.S.C. 1001. Potential penalties include substantial criminal fines, imprisonment up to 5 years, or both.

To verify this training, scan the QR code with your mobile device.

Rev. 1/2016

EXHIBIT C

Section 028300 Lead Safe Work Practices Specification

and

Section 028200 Asbestos Abatement Specification

SECTION 028300
LEAD SAFE WORK PRACTICES

PART I – GENERAL

1.1 DESCRIPTION/SCOPE OF WORK

A. The work covered by these specifications shall consist of furnishing all labor, materials, tools, and equipment necessary to control and mitigate potential lead-based paint (LBP) hazards during demolition/renovation activities pertaining to the ***Town of New Windsor Caesars Lane WWTP Expansion Project: Phase 2.***

The following is a detailed listing of identified Lead-based Paint(s) and/or Lead-containing Material(s), above the EPA action level of 1.0 mg/sq. cm.:

TABLE I: IDENTIFIED LEAD-BASED PAINT
TOWN OF NEW WINDSOR
CAESARS LANE WWTP
EXPANSION PROJECT: PHASE 2

Location	LBP Component	Substrate	Color	LBP Condition
Dewatering Building				
Bypass Building	Steel Beams/Columns	Metal	Blue	Poor
Primary Tank #1, Primary Tank #3, & Trickling Filter #2	Outer Railing	Metal	Grey	Poor
Trickling Filter #1 & Trickling Filter #2	Catwalk Supports	Metal	Red	Poor
Trickling Filter #1 & Trickling Filter #2	Filter Motor	Metal	Blue	Poor

It should be noted that several components tested did in fact contain minimal lead-levels below the EPA threshold level of 1.0 mg/sq. cm for classification as Lead-Based Paint (LBP) and are considered lead-containing coatings by the OSHA Regulation, "Lead Exposure in Construction" (29 CFR 1926.62). OSHA does not recognize a minimum limit for lead concentrations in paint for the purposes of disturbance. Monitoring of workers performing demolition/cleaning/disturbance of painted surfaces shall be completed to document personnel occupational exposure. Items containing any amount of lead concentration are considered lead-containing coatings per 29 CFR 1926.62, OSHA Lead Exposure in Construction.

The work of this Contractor shall include the following, and shall be as required by specific work-related tasks and disturbance(s) of above-referenced Lead-based Paint(s) and/or Lead-containing Material(s), above the EPA action level of 1.0 mg/sq. cm:

1) Personnel air monitoring and analysis.

2) Waste characterization and classification.

3) Transportation/disposal off-site of LBP wastes/debris and lead-contaminated waste/debris generated from LBP disturbance(s).

B. Manual demolition, scraping and manual sanding of lead-based paint surfaces and power tool cleaning with dust collection systems shall be performed in conjunction with engineering and work practice controls meeting the requirements of 29 CFR 1926.62(e)(1).

C. Components with lead-based paint shall be removed intact to the extent practicable. A 6-mil polyethylene drop cloth shall be placed on either side of the component, prior to its removal, to catch any paint chips that may become dislodged. The component shall be wrapped in a layer of 6-mil polyethylene for movement to the disposal container. Follow proper disposal requirements. The area around the component removal shall be wet wiped and HEPA vacuumed, including the tent enclosure. The polyethylene sheeting shall be carefully folded in on itself and placed in a 6-mil disposal bag. Containment debris shall be properly disposed of as lead-based waste.

D. Chemical stripping should be used for LBP removal on surfaces that will be subjected to welding, cutting or torch burning. No chemical strippers containing methylene chloride shall be used by the Contractor on this project. Abrasive blasting, heat stripping, uncontained hydroblasting, welding, cutting or torch burning shall not be performed on surfaces where LBP is present. Abrasive blasting, heat stripping, uncontained hydroblasting, welding, cutting or torch burning shall only be performed on bare metal substrate.

E. The Contractor's use of a subcontractor shall not relieve the Contractor of full responsibility for the work to be performed.

F. If available, the Contractor may submit exposure assessment data obtained within the last twelve (12) months from previous jobs conducted under similar conditions, control methods, work practices and environmental conditions to be used in this contract. Other objective data may be used to demonstrate that work activities in this contract will not result in occupational exposures to airborne lead that exceeds the PEL. The assessment shall include comparable lead concentrations in coating materials, work practices, engineering controls and rates of work.

G. Until the exposure assessment is performed, the Contractor must provide to his workers the following: Respiratory protection with a minimum protection factor of 10, personal protective clothing, lead-free change areas, hand washing/shower facilities, biological monitoring and training per 29 CFR 1926.62.

This Specification shall be used as a Guideline for the use of Contractors who complete the demolition/renovation activities pertaining to the ***Town of New Windsor Caesars Lane WWTP Expansion Project: Phase 2*** as detailed within Section #1.2 of this specification. The intent of this Specification is to remain in conformance with 29 CFR 1926.62 and to maintain an airborne concentration of lead-dust below the action level. This Specification is written in order to outline the worst-case scenario in regard to lead safe work practices. However, the work procedures section is written in a manner, which outlines the requirements that should be necessary, at a minimum, to maintain an airborne concentration of lead dust below the action level.

H. The Contractor shall ensure that any HVAC equipment intakes within and around the work areas are protected by shutting down the units and/or installing HEPA filters over the intake. The Contractor shall coordinate rebalancing of the HVAC equipment prior to installing the HEPA filters. The Contractor shall alter the size and extent of the isolation barriers as necessary due to weather conditions, functional space use and density of building occupants in the vicinity, as required.

1.2 REGULATIONS & REFERENCE STANDARDS

A. General Requirements

All work of this section shall be conducted in strict accordance with all applicable Federal, State and Local regulations.

Matters of interpretations of the standards and regulations shall be submitted to the appropriate agency for resolution before starting work. Where these requirements vary the most stringent shall apply.

B. Specific Requirements

1. American National Standards Institute (ANSI)

   a. ANSI Z9.2-79 – Fundamentals Governing the Design and Operation of Local Exhaust Systems.

   b. Z88.2-80 – Practice for Respiratory Protection.

2. Title X - U.S. Department of Housing and Urban Development "Guidelines for the Evaluation and Control of Lead-Based Paint Hazards in Housing."

3. Code of Federal Regulations (CFR)

   a. 29 CFR Part 1910.120 – Hazardous Waste Operations and Emergency Response.

   b. 29 CFR Part 1910.134 – Respiratory Protection.

   c. 29 CFR Part 1910.146 – Confined Space Entry Program.

   d. 29 CFR Part 1910.1025 – Lead.

   e. 29 CFR Part 1910.1200 – Hazard Communication.

   f. 29 CFR Part 1926.55 – Gases, Vapors, Fumes, Dusts and Mists.

   g. 29 CFR Part 1926.57 – Ventilation.

   h. 29 CFR Part 1926.62 – Lead (Construction Industry Standard).

   i. 40 CFR Part 260 – Hazardous Waste Management Systems: General.

   j. 40 CFR Part 261 – Identification and Listing of Hazardous Waste.

   k. 40 CFR Part 262 – Generators of Hazardous Wastes.

   l. 40 CFR Part 263 – Transporters of Hazardous Waste.

   m. 40 CFR Part 264 – Owners and Operators of Hazardous Waste Treatment, Storage & Disposal Facilities.

   n. 40 CFR Part 265 – Interim Status Standards for Owners and Operators of Hazardous Waste Treatment, Storage & Disposal Facilities.

   o. 40 CFR Part 268 – Land Disposal Restrictions.

p. 40 CFR Part 745 – Lead; Requirements for Lead-Based Paint Activities in Child Occupied Facilities

q. 40 CFR Part 745.90 – EPA's Renovation, Repair & Painting Rule.

r. 49 CFR Parts 170-178 – Department of Transportation Regulations.

4. New York Codes of Rules and Regulations (NYCRR)

a. 6 NYCRR Part 360 – Solid Waste Regulations.

b. 6 NYCRR Part 364 – Waste Transporter Permits.

c. 6 NYCRR Part 370-373 – Hazardous Waste Regulations.

d. 8 NYCRR Part 155 – Uniform Safety Standards for School Construction & Maintenance Projects.

5. Steel Structures Painting Council (SSPC)

a. SSPC-Guide 6 – Guide for Containing Debris Generated During Paint Removal Operations.

SSPC-Guide 7 – Guide for the Disposal of Lead-Contaminated Surface Preparation Debris.

Preparation Debris.

6. Underwriters Laboratories. Inc. (UL)

a. UL 586 – High Efficiency, Particulate Air Filter Units.

1.3 DEFINITIONS

A. Abatement
For the purposes of this Specification, the term abatement shall refer to any procedure that impacts lead-based paint on any surface. Procedures can include: paint removal; whole removal of the surface (i.e. window replacement): demolition of painted surfaces; and clean-up of paint debris.

B. Action Level
Employee exposure without regard to use of respirators, to an airborne concentration of lead of thirty (30) micrograms per cubic meter of air averaged over an 8-hour period. As used in this section, micrograms per cubic meter of air" refers to the action level. (Note: For longer exposure period lower action level is triggered).

C. Area Monitoring
Sampling of lead concentrations within the lead control area (work area) and inside the physical boundaries which is representative of the airborne lead concentrations that may reach the breathing zone of personnel potentially exposed to lead.

D. Physical Boundary

Area physically roped or partitioned off around a work area to limit unauthorized entry of personnel. As used in this section, "inside boundary" shall mean the same as "outside lead control area."

E. Change Rooms and Shower Facilities
Rooms within the designated physical boundary around the work area equipped with separate storage facilities for clean protective work clothing and equipment and for street clothes which prevent cross-contamination.

F. Decontamination Room
Room for removal of contaminated personal protective equipment (PPE).

G. Eight-Hour Time Weighted Average (TWA)
Airborne concentration of lead averaged over an 8-hour workday to which an employee is exposed.

H. High Efficiency Particulate Air (HEPA) Filter Equipment
HEPA filtered vacuuming equipment with a UL 586 filter system capable of collecting and retaining lead-contaminated paint dust. A high efficiency particulate filter means 99.97 percent efficient against 0.3 micron size particles.

I. Lead Control Area
A work area within which engineering controls are implemented to prevent the spread of lead dust, paint chips or debris from lead-containing paint removal operations. The lead control area is isolated by physical boundaries to prevent entry of unauthorized personnel.

J. Lead Permissible Exposure Limit (PEL)
Fifty (50) micrograms per cubic meter of air as an 8-hour time weighted average as determined by 29 CFR Part 1926.62. If an employee is exposed for more than 8 hours in a work day, the PEL shall be determined by the following formula:

PEL (micrograms/cubic meter of air) = 400/No. hrs worked per day

K. Personal Monitoring
Sampling of lead concentrations within the breathing zone of an employee to determine the 8-hour time weighted average concentration in accordance with 29 CFR Part 1926.62. Samples shall be representative of the employees work tasks. Breathing zone shall be considered an area within a hemisphere, forward of the shoulders with a radius of 6 to 9 inches and the center at the nose or mouth.

L. Wipe Sampling
Clearance testing procedures, which determine the amount of existing lead-based paint surface dust by atomic absorption spectroscopy analysis, or inductively coupled plasma emission spectrometry expressed in micrograms of lead.

1.4 QUALITY ASSURANCE

A. Qualifications

1. Contractor: Certification that the Contractor has prior experience on LBP activity projects similar in nature and extent to ensure the capability to perform the required work procedures in a satisfactory manner.

2. Competent Person: Certification that the Contractor's full-time onsite Competent Person meets the competent person requirements of 29 CFR Part 1926.62 and is experienced in administration and supervision of LBP activity projects, including work practices, protective measures for building and personnel, disposal procedures, etc. This person shall have completed a Contractor Supervisor LBP abatement course by an EPA Training Center or an equivalent certification course, and have had a minimum of 2 years on-the-job experience.

3. Testing Laboratory: The name, address, and telephone number of the independent testing laboratory selected to perform sampling and analysis for personal and area air samples and wipe samples, and TCLP analysis of LBP wastes and debris. Documentation that the laboratory performing the analysis is an EPA National Lead Laboratory Accreditation Program (NLLAP) accredited laboratory and that it is listed proficient in the NIOSH/EPA Environmental Lead Proficiency Analytical Testing Program (ELPAT), and a New York State Department of Health (NYSDOH) Environmental Laboratory Approval Program (ELAP) certified laboratory. Certification shall include accreditation for heavy metal analysis, list of experience relevant to analysis of lead in air, and a Quality Assurance and Quality Control Program. Currently, the American Association for Laboratory Accreditation (ASLA) and the American Industrial Hygiene Association (AIHA) are the EPA recognized laboratory accreditors. Documentation shall include the date of accreditation or reaccreditation.

4. Blood Lead Testing Laboratory: The name, address and telephone number of the blood lead testing laboratory; the laboratory's listing by OSHA and the U.S. Public Health Service Center for Disease Control (CDC); and documentation that the laboratory certified in the state where the work site is located.

B. Respiratory Protection Devices
Manufacturer's certification of NIOSH for respiratory protection devices utilized on the site.

C. Cartridges, Filters, and Vacuum Systems
Manufacturer's certification of NIOSH approval of respirator cartridges (organic vapor, acid gas, mist, dust, high efficiency particulate); High Efficiency Particulate Air (HEPA) filtration capabilities for all cartridges, filters, and HEPA vacuum systems.

D. Medical Examination and Records
Certification that employees who are involved in LBP abatement work have received medical examinations and will receive continued medical surveillance, including biological monitoring, as required by 29 CFR Part 1926.62, 29 CFR Part 910.1200, 29 CFR Part 1910.120 and by the state and local regulations pertaining to such work. Records shall be retained, at Contractor expense, in accordance with 29 CFR Part 1910.20.

1. Provide medical surveillance to workers until exposure monitoring reveals that workers are not exposed on any day of the job to airborne lead at or above the Action Level of 30 ug/dL of blood. This consists of a blood test measuring the level of lead and zinc protoporphyrin by a licensed physician. Further testing and medical exams may be necessary depending on the results of initial blood tests and/or the initial exposure assessment.

E. Training
Training certification shall be provided prior to the start of work involving LBP abatement, for all of the Contractors' workers, supervisors and Competent Person. Training shall meet the requirements of 29 CFR Part 1926.62, 29 CFR Part 1926.59, 29 CFR Part 1910.1200, 29 CFR Part 1910.120 and 49 CFR 172, and that required by EPA or the state LBP course for the

work to be performed. Training shall be provided prior to the time of job assignment and, at least, annually. The project specific training shall. at a minimum, include the following.

1. Specific nature of the operation, which could result in exposure to lead.

2. Purpose, proper selection, fitting, use and limitations of respirators.

Purpose and description of the medical surveillance program and the medical removal protection program, including information concerning the adverse health effects associated with excessive exposure to lead (with particular attention to the adverse reproductive effects on both males and females and hazards to the fetus and additional precautions for employees who are pregnant.)

3. Relevant engineering controls and good work practices.

4. The contents of any compliance plan in effect.

5. Instructions to employees that chelating agents should not routinely be used to remove lead from their bodies and should not be used at all except under the direction of a licensed physician.

6. The employee's right of access to records under 29 CFR part 1910.20.

F. Respiratory Protection Program

1. Furnish each employee required to wear a negative pressure respirator or other appropriate type with a respirator fit test at the time of initial fitting and at least every 12 months thereafter as required by 29 CFR Part1910.134 and 29 CFR Part 1926.62.

2. Establish and implement a respiratory protection program as required by ANSI Z88.2, 29 CFR Part 1910.134 and 29 CFR Part 1926.62.

3. All workers are required to don an appropriate level of protection commensurate with the airborne concentrations of lead in which they are working. The level of protection will be determined by the Contractor, based on objective air monitoring data.

G. Licenses and Permits

Copies of licenses and permits as required by applicable Federal, state and local regulations shall be obtained before the start of the LBP project.

1.5 SUBMITTALS

A. The submittals shall be submitted in accordance with Specification Section 01300, Submittals.

B. Certifications

Prior to the start of work, submit required certifications, plans, programs, permits and licenses identified in Paragraph 1.5 of this specification section.

C. Equipment List

Prior to the start of work submit list of equipment items to be used in the work, including brand names, model, capacity, performance characteristics, quantities and other pertinent information.

D. Lead-Based Paint (LBP) Management Plan

The contractor shall prepare a detailed LBP Management Plan that identifies the work procedures, health and safety measures to be used in LBP work procedures; and that addresses spill prevention, containment and emergency response procedures. The plan shall address the methods to be undertaken to abate the lead to include the following key elements:

1. LBP containment methods to control employee exposure to lead at or below the permissible exposure limit and to ensure that airborne lead concentrations of 30 micrograms per cubic meter of air are not exceeded outside of the lead control area.
2. Training requirements as required by Federal, state and local regulations.
3. Unique problems associated with the LBP project.
4. Sketch of location, size and details of LBP control areas, decontamination rooms/areas, change rooms and shower facilities.
5. Eating, drinking, smoking, and rest room procedures.
6. Sequencing of LBP related work.
7. Personnel protective equipment and respiratory protection program, including controls.
8. Engineering controls, containment structures and safety measures.
9. Worker exposure assessment procedures.
10. Work Practice controls.
11. Housekeeping.
12. Hygiene facilities and practice.
13. Medical surveillance, including medical removal procedures.
14. Sampling, testing and analytical methods to include personnel air sampling requirements of 29 CFR Part 1926.62, wipe sampling of the surface where the LBP was removed and, when required, toxicity characteristic leaching procedure (TCLP) testing of the waste material in accordance with 40 CFR 261 and 6 NYCRR Part 371, and area air sampling required by the specifications. Procedures must include frequency, locations, sampling and analytical methods to be used.

E. Compliance Program
Contractor's Compliance Program prepared in accordance with 29 CFR Part 1926.62 (e) (2).

F. Waste Transporter and Disposal Facility Permits, and Disposal Documents.

1. Name, address and telephone number of 6 NYCRR Part 364 transporter who will be transporting the LBP wastes and debris and a copy of the transporter's 6 NYCRR Part 364 permit.
2. Name, address and telephone number of disposal facility accepting the LBP wastes and debris and a copy of the permit from the disposal facility documenting the facility is permitted to accept the wastes being delivered.
3. Copy of completed waste characterization (waste profile) forms for obtaining approval to dispose of the LBP wastes and liquid wastes at the disposal facility.

4. Copy of the approved waste characterization (waste profile) forms from the disposal facility indicating they are permitted to accept the wastes and will accept the wastes being delivered.

5. Example of completed transportation and disposal documents (i.e., bill of lading or hazardous waste manifest and land disposal restriction notification forms, as applicable) prior to shipment of wastes.

6. Copy of the completed and signed transportation and disposal documents at time of shipment for the disposal of LBP wastes and debris, liquid wastes and any other wastes generated, and copy signed by the disposal facility.

7. Copy of certificate of destruction for incinerated wastes, certificate of treatment and/or certificate of disposal, as applicable and associated tracking documents from the final disposal facility for disposal of the LBP wastes and debris.

G. Health and Safety Plan And Confined Space Entry Program
Contractor's written site specific Health and Safety Plan prepared in accordance with 29 CFR Part 1910.120 and Contractor's confined space entry program prepared in accordance with 29 CFR Part 1910.146. These documents are requested for information only and as documentation that they exist.

H. Sampling and Laboratory Analysis Reports
Submit field sampling logs for all personal and area air samples, wipe samples and waste samples taken, and submit copy of laboratory analysis reports and chain of custody records for all sample analysis.

I. Competent person certification per Section 3.5.B.

1.6 POSTED WARNINGS & NOTICES

The following regulations, warnings and notices shall be posted at the work site in accordance with 29 CFR Part 1926.62.

A. Regulations
A copy of applicable Federal, state, and local regulations shall be maintained at the work site.

B. Warning Signs
Warning signs shall be provided at approaches to LBP control areas. Signs shall be located at a distance from the LBP control areas that will allow personnel to read the sign and take the necessary protective actions required before entering the LBP control area. The signs shall comply with the requirements of 29 CFR Part 1926.62.

C. Worker Information
Right-to-know notices shall be placed in clearly visible areas of the work site in compliance with Federal, State and Local regulations.

D. Air Monitoring Results
Daily air monitoring results shall be prepared in order to be easily understood by the workers and shall be placed in a clearly visible area of the work site.

E. Emergency Telephone Numbers
A list of telephone numbers shall be posted at the site. The list shall include numbers of the local hospital, emergency squad, police and fire departments, Government and Contractor

representatives who can be reached 24 hours per day and professional consultants directly involved in the project.

1.7 EQUIPMENT & MATERIALS

Sufficient quantities of health and safety materials required by 29 CFR Part 1926.62, and other materials and equipment needed to complete the project, shall be available and kept on the site.

A. Respirators
Air-purifying respirators shall be approved by NIOSH for use with dust, fumes and mists having permissible exposure limits less than 0.05 milligrams per cubic meter (i.e., have high-efficiency particulate air (HEPA) filters) and for other hazardous airborne contaminants that may be encountered, as determined by the Competent Person. The Contractor shall furnish, at no cost to personnel/employee, respirators to provide protection from airborne concentrations of lead. Respirators shall comply with the requirements of 29 CFR Part 1926.62 and shall be used in accordance with 29 CFR Part 1926.62, 29 CFR Part 1926.103 and 29 CFR Part 1910.134.

B. Respirator Cartridges
A sufficient supply of respirator cartridges shall be maintained at the work site to provide new cartridges to employees and authorized visitors, throughout the duration of the project. Cartridges shall be replaced according to the manufacturer's recommendations, when breathing becomes difficult, or if the cartridge becomes wet.

C. Protective Clothing

1. The Contractor shall furnish, at no cost to personnel/employee, equipment/ clothing for protection from airborne and waterborne LBP debris. An adequate supply of these items shall be available for worker and authorized visitor use. Workers and visitors shall not take protective clothing and equipment off the work site at any time. Protective clothing includes:

    a. Coveralls (Whole Body Protective Coverings): Full-body coveralls and head covers shall be worn by workers in the work area as necessary. Sleeves shall be secured at the wrist and pants legs at the ankle with tape. Permeable clothing shall be provided in heat-stress conditions. Where non-disposable coveralls are provided, these coveralls shall be cleaned after each wearing. Cleaning of coveralls and other non-disposable clothing shall be in accordance with the provisions for cleaning in 29 CFR Part 1926.62.

    b. Boots: Work boots with nonskid soles or impermeable work boot covers shall be worn by workers. Where required by OSHA, safety boots (steel toe or steel toe and shank) shall be worn. Paint the uppers of boots red with waterproof enamel. Do not allow boots to be removed from the work area for any reason after being contaminated with LBP debris. Dispose of boots as LBP contaminated waste at the end of the work.

    c. Gloves: Inner gloves, appropriate for items and hazards encountered and disposable outer work gloves shall be provided to each worker and shall be worn while the worker is in the work area. Glove material shall be appropriate for the specific chemical exposure. Gloves shall not be removed from the work area and shall be disposed of as LBP contaminated waste at the end of the work.

d. Hard Hats: Head protection (hard hats) shall be provided as required by OSHA for workers and authorized visitors. Protective plastic-strap suspension hats shall be used. Hard hats shall be worn at all times that work is in progress. Hats shall remain in the work area until the project is completed. Hats shall be thoroughly cleaned, decontaminated and bagged before being removed from the work area at the end of the project.

e. Eye Protection: Fog-proof goggles for personnel engaged in LBP operations shall be worn when the use of a full-face piece respirator is not required.

D. Negative Air Pressure System

When a LBP control area requires the use of an airtight containment barrier, a negative air pressure system shall be used and pressure differential recordings taken. LBP shall not be removed from the LBP control area until the proper engineer controls and HEPA filtration systems are in place.

1. HEPA Filter Requirements

The negative air pressure system shall be equipped with approved HEPA filters per UL 586. Negative air pressure equipment shall be equipped with new HEPA filters, and shall be sufficient to maintain a minimum pressure differential of minus 5 Pa (0.02 inch) of water column relative to adjacent, unsealed areas. Negative air pressure system minimum requirements are listed below.

a. The unit shall be capable of delivering its rated volume of air with a clean first stage filter, an intermediate filter and a primary HEPA filter in place.

b. The HEPA filter shall be certified as being capable of removing particles as small as 0.3 micrometers at a minimum efficiency of 99.97 percent.

c. The unit shall be capable of continuing to deliver no less than 70 percent of rated capacity when the HEPA filter is 70 percent full or measures 620 Pa (2.5 inches of water) static pressure differential on a magnehelic gauge.

d. The unit shall be equipped with a manometer-type negative pressure differential monitor with minor scale division of 0.02 inch of water and accuracy within plus or minus 1.0 percent. The manometer shall be calibrated daily as recommended by the manufacturer. Record manually manometer readings of the pressure differential between the LBP control area and adjacent unsealed areas at the beginning of each workday and every 2 working hours thereafter.

e. The unit shall be equipped with a means for the operator to easily interpret the readings in terms of the volumetric flow rate of air per minute moving through the machine at any given moment.

f. The unit shall be equipped with an electronic mechanism that automatically shuts the machine off in the event of a filter breech or absence of a filter.

g. The unit shall be equipped with an audible horn that sounds an alarm when the machine has shut itself off.

h. The unit shall be equipped with an automatic safety mechanism that prevents a worker from improperly inserting the main HEPA filter.

i. The unit shall be ducted through the containment barrier wall to the outside of the work area. The unit shall not be exhausted into any work area.

2. Number of Units Required
The air within the containment barrier shall be changed at least once every 15 minutes by a continuously operating negative air pressure system, until the LBP control area barrier is removed. Filters shall be replaced as necessary to maintain the efficiency of the system. A back-up unit shall be maintained onsite.

3. Auxiliary Generator
An auxiliary generator shall be provided with a capacity adequate to power a minimum of 50 percent of the negative air machines at any time during the work. When power fails, the generator controls shall automatically start the generator and switch the negative air machine to generator power. The generator shall not present a carbon monoxide hazard to workers.

4. Discontinuing Negative Air Pressure System
The negative air pressure system shall not be shut down during LBP work unless authorized by the Owner's Consultant. At the completion of the LBP work procedures and disposal project, units shall be run until full cleanup has been completed and wipe clearance samples have been collected, analyzed and have passed final clearance testing requirements. Dismantling of the negative air pressure systems shall conform to the written decontamination procedures. Prefilters shall be removed and properly disposed. The intake to the machines shall be sealed with polyethylene to prevent environmental contamination.

E. Expendable Supplies

1. Polyethylene Sheet and Bags - General
Polyethylene sheet and bags shall be minimum 6-mil thick. Bags shall have pre-printed labels, and 5-inch (minimum) long plastic ties, pointed and looped to secure the filled bags. Polyethylene sheets shall be in roll sizes to minimize seams.

2. Polyethylene Sheet - Flame Resistant
Where a potential for fire exists, flame-resistant polyethylene sheets shall be provided. Polyethylene film shall conform to the requirements of NFPA 701.

3. Polyethylene Sheet - Reinforced
Reinforced polyethylene sheet shall be provided where high skin strength is required such as where it constitutes the only barrier between the LBP control area and the outdoor environment. The sheet stock shall consist of translucent, nylon-reinforced or woven-polyethylene thread laminated between two layers of polyethylene film. Film shall meet flame resistant standards of NFPA 701.

4. Tape and Adhesive Spray
Tape and adhesive shall be capable of sealing joints between polyethylene sheets and for attachment of polyethylene sheets to adjacent surfaces. After dry application, tape or adhesive shall retain adhesion when exposed to wet conditions, including amended water. Tape shall be minimum 2 inches wide, industrial strength.

5. Containers
DOT approved impermeable containers shall be used to receive and retain LBP waste and debris, and lead contaminated material until disposal. Containers shall be labeled in accordance with EPA, DOT and OSHA standards.

6. Chemicals

Chemicals, including caustics and paint strippers, shall be properly labeled and stored in leak-tight containers.

F. Vacuum Systems
HEPA filtered vacuum systems shall be used during LBP operations which generate dust. The systems shall be suitably sized for the project, and filters shall be capable of removing particles as small as 0.3 micrometers at a minimum efficiency of 99.97 percent.

G. Heat Blower Guns
Heat blower guns shall be flameless, electrical, paint-softener type with controls to limit temperature to 590 degrees C (1,100 degrees F). Heat blower shall be DI (non-grounded) 120 Vac, and shall be equipped with cone, fan, glass protector and spoon reflector nozzles.

H. Chemical Paint Strippers
Chemical paint strippers shall contain no methylene chloride.

I. Chemical Paint Stripper Neutralizer
Neutralizers for paint strippers shall be compatible with the substrate and suitable for use with the chemical stripper that has been applied to the surface.

1.8 STORAGE OF MATERIALS

Materials shall be stored in a place and manner, which protects them from damage and contamination. During periods of cold weather, plastic materials shall be protected from the cold. Regularly inspect materials to identify damaged or deteriorating items. Damaged or deteriorated items shall not be used and shall be removed from the site as soon as they are discovered. Stored materials shall not present a hazard or an inconvenience to workers, visitors and/or other employees.

PART 2 – PRODUCTS

(NOT APPLICABLE)

PART 3 – EXECUTION

3.1 WORK PROCEDURES

LBP work procedures and related work shall be performed in accordance with the U.S. Department of Housing and Urban Development "Guidelines for the Evaluation and Control of Lead-Based Paint Hazards in Housing" and the accepted Contractor's LBP Management Plan. Procedures and equipment required to limit occupational and environmental exposures to lead during LBP removal shall be in accordance with 29 CFR Part 1926.62 and as specified herein. LBP waste and debris, lead contaminated debris and personal protective clothing and equipment shall be disposed of in compliance with Federal, state, and local regulations.

A. Personnel Protection Procedures
Personnel shall wear and use protective clothing and equipment as specified and required by 29 CFR Part 1926.62 and 29 CFR Part 1910.120. Eating, smoking, drinking, chewing tobacco and chewing gum, and applying makeup shall not be permitted in the LBP control area. Personnel of trades not engaged in the LBP work procedures and disposal of LBP shall not be exposed at any time to airborne concentrations of lead equal to or in excess of 30 micrograms per cubic meter of air. Electrical service shall be disconnected when wet removal is performed,

and temporary electrical service protected by a ground fault circuit interrupter shall be provided.

B. Safety and Health Procedures

The Competent Person shall be present on the work site throughout the LBP project to supervise, monitor and document the project's health and safety provisions. A daily log shall be maintained showing the results of sampling tests throughout the project area. LBP work being conducted within a LBP Control area where an airtight barrier is required shall be stopped if measured airborne lead concentrations, collected during LBP work procedures, exceed the pre- LBP work procedures airborne concentration levels.

C. Safety and Health Responsibilities

The Competent Person shall:

1. Verify that training meets applicable requirements.

2. Review and approve LBP Management Plan for conformance to the applicable referenced standards.

3. Inspect LBP removal work for conformance with the accepted LBP Management Plan.

4. Ensure that worker exposure air monitoring activities are in accordance with 29 CFR Part 1926.62.

5. Ensure work is performed in strict accordance with specifications.

6. Ensure hazardous exposure to personnel and to the environment are adequately controlled.

7. The Contractor's Competent Person shall be responsible for directing personal air monitoring.

8. The Owner's Consultant shall be responsible for directing area and final air/wipe testing.

D. Medical Surveillance Procedures

Medical surveillance shall be implemented in accordance with the accepted Contractor's LBP Management Plan, and shall comply with the requirements of 29 CFR Part 1926.62, including the provisions for biological monitoring, medical removal, protection and a physician's written opinion, signed by the physician performing the employee examination. The Contractor shall provide a copy of the written opinion for Contractor's employees prior to each employee's commencement of work.

E. Engineering Controls and Containment Structures

Engineering and work practice controls are the primary means of maintaining exposures to lead below the PEL. Paint removal and surface preparation activities must keep dust levels at a minimum. Torch cutting of surfaces with LBP will require appropriate personal protective equipment and exposure controls. Power tools must be equipped with vacuum shrouds including a high efficiency particulate air filtered vacuum system attached.

1. LBP Control Area

The LBP control area is where LBP work procedures occur and as such shall be considered contaminated. The LBP control area shall be isolated to prevent LBP containing dust or debris from passing into adjacent open areas. The control area shall be decontaminated at the completion of the LBP work procedure and disposal work.

2. Boundary Requirements.
Physical boundaries shall be provided around exterior LBP control areas by roping off the area indicated in the LBP Management Plan.

3. Control Barriers
The LBP control area shall be designated and separated from other outside areas with control barriers. The polyethylene sheeting shall have all openings masked and sealed. The LBP control area shall be erected according to the Contractors LBP Management Plan. Polyethylene sheeting shall be mechanically supported, independent of duct tape or spray adhesive.

4. Masking and Sealing

   a. Exterior LBP control area requirements: Where the construction of a contained LBP control area is impractical or not required based on the method of lead work procedures, a roped-off perimeter shall be installed 20 feet from and around the area where the LBP handling procedures are performed and other requirements for LBP control areas shall be maintained. Personal monitoring of airborne concentrations shall be conducted in adjacent areas during the work shift, in accordance with 29 CFR Part 1926.62. Area air monitoring inside and outside of the roped-off perimeter shall be conducted as specified. Airborne concentrations shall not exceed specified levels.

5. Personnel Decontamination Unit
Personnel decontamination units shall be provided when required for the LBP procedures. Materials fabricated or delivered to the site before the shop drawings have been returned to the Contractor will be subject to rejection by the Owner's Consultant. Specifications and drawings of portable prefab units, such as a trailer unit, if utilized, must be submitted for review and approval before start of construction. Submittal shall include, but not be limited to, a floor plan layout showing dimensions, materials, sizes, thickness, plumbing, and electrical outlets. Access between contaminated and uncontaminated areas shall be through an airlock. Access between any two rooms or room and trailer within the decontamination unit shall be through a plastic sheeting curtained doorway. A separate equipment decontamination unit shall be provided. Each work area shall have an emergency exit. The personnel decontamination unit's clean room shall be the only means of entrance and exit, except for emergencies, from the LBP control area. Materials shall exit the LBP control area through the equipment decontamination area.

6. Clean Room
The clean room shall have only one exit to non-contaminated areas of the site. An airtight seal shall be constructed of polyethylene between the clean room and uncontaminated areas. Surfaces of the clean room shall be protected with sheet polyethylene. A temporary unit with a separate equipment decontamination locker room and a clean locker room shall be provided for personnel who are required to wear whole body protective clothing. One locker shall be provided in each locker room for each LBP worker, and each Contractor's representative. Lead-free personal clothing and shoes shall be kept in the clean locker. Hand wash station/showers shall be located between the equipment decontamination locker room and the clean locker room, and

employees shall wash or shower before changing into personal clothes. An adequate supply of clean disposable towels shall be provided. LBP contaminated work clothing shall be cleaned. Clean rooms shall be physically attached to the LBP control area for areas inside the building but may be directly adjacent to the LBP control area outside of the building. Joint use of this space for other functions, such as offices, equipment storage, etc., is prohibited.

7. Hand Wash Station/Shower Room
An operational shower and hand washing station shall be provided between the work area and the clean changing room. Workers shall wash and/or shower before entering the clean changing room. Shower room shall be separated from other rooms by air-tight walls fabricated from polyethylene sheeting. Water shall be hot and cold or warm. Shower heads/ controls, soap dish, continuing supply of soap, and clean towels shall be provided. The shower shall be maintained in a sanitary condition. Waste water shall be pumped to drain and through waste water filters that meet state and/or local requirements. These filters shall be located inside the shower unit and filters shall be changed regularly. Spent filters shall be discarded as LBP contaminated waste.

8. Equipment Decontamination
The Equipment Decontamination Unit shall be used for removal of equipment and materials from the LBP control area, and shall include a wash room, holding room, and an enclosed walkway. The unit shall be constructed from wood framing material and polyethylene sheeting. Workers shall not enter or exit the LBP control area through the Equipment Decontamination Unit. A washdown station, consisting of an enclosed shower unit, shall be located in the work area outside the Wash Room. The washdown station shall be used to clean equipment, bags and containers. Bagged or containerized LBP wastes shall be passed from the work area and cleaned in the Wash Room. The Wash Room shall be separated from the work area by a polyethylene sheet flap. Wastewater shall be filtered and filters shall be changed as required for the shower unit and the Wash Room. Filters shall be disposed of as LBP contaminated wastes. The Holding Room shall be used as a drop location for bagged LBP passed from the Wash Room. This room shall be constructed so that bagged materials cannot be passed from the Wash Room through the Holding Room to the enclosed walkway. The walkway shall provide access to the Holding Room from outside the work area. The enclosed walkway shall be separated from the exterior by a single flap of polyethylene sheeting. The Contractor's equipment used for LBP work procedures shall be decontaminated prior to its removal outside of the lead control area. The decontamination water shall be containerized, the containers labeled, the liquid sampled and analyzed in the laboratory for lead, and properly disposed of off-site according to applicable Federal, State and Local regulations. See Paragraph 3.5.C.2.

9. Maintenance of Decontamination Units
Barriers and polyethylene sheeting shall be effectively sealed and taped. Containment barriers shall be visually inspected at the beginning of each work period. Damaged barriers and defects shall be immediately repaired upon discovery. Smoke testing methods shall be used to test effectiveness of barriers when directed by the Owner's Consultant.

10. LBP Control Area Exiting Procedures
Personnel exiting a LBP control area shall perform the following procedures and shall not leave the work place wearing any clothing or equipment worn during the work day:

    a. HEPA vacuum all protective clothing before removing.

    b. Remove protective clothing in the decontamination room and place this clothing in an approved impermeable disposal bag.

c. Wash or shower.

d. Change to clean clothes prior to leaving the physical boundary designated around the lead-contaminated work site.

F. Temporary Utilities

1. Temporary equipment as necessary to provide adequate power, light, heat, and water shall be installed, as needed, to accomplish the LBP operations properly and safely. The Contractor shall maintain the security and maintenance of the utility system in the LBP control areas. In the event of a failure of any utility system, the Owner will not be responsible for any loss of time or other expense incurred by the Contractor. In addition to any site-specific temporary utility requirements, the Contractor shall provide:

a. Back-flow protection on all water connections is required. Fittings installed by the Contractor shall be removed after completion of work with no damage or alteration to existing water piping and equipment.

b. When applicable, heavy-duty abrasion-resistant hoses to provide water to each work area and decontamination area.

c. A hot water heater, if necessary, to provide warm water to the decontamination showers.

d. Electrical service to work areas. Electrical service shall comply with National Electric Code, State and Local requirements and UL standards. Warning signs shall be posted at power outlets, which are other than 110-120 volt power. Only grounded extension cords shall be used. Incandescent lamps and light fixtures shall be of adequate wattage to provide good illumination in LBP control areas.

e. Temporary heating units, when needed, that have been tested and labeled by UL, FM, or another recognized trade association related to the fuel being consumed. Forced air or fan type units shall not be utilized inside a work area. Units shall have tip-over protection.

f. Sufficient quantity of single-occupant, self-contained chemical toilets, properly vented and fully enclosed.

3.2 LEAD-BASED PAINT WORK PRACTICES (Use methods as applicable)

A. Component Removal:

Components shall be removed intact to the extent practicable. A 6-mil polyethylene drop cloth shall be placed on either side of the component, prior to its removal, to catch any paint chips that may become dislodged. The component shall be wrapped in a layer of 6-mil polyethylene for movement to the disposal container. Follow proper disposal requirements. The area around the component removal shall be wet wiped and HEPA vacuumed, including the tent enclosure. The polyethylene sheeting shall be carefully folded in on itself and placed in a 6-mil disposal bag. Containment debris shall be properly disposed of as lead-based waste.

Clearance will be performed as follows:

1. Visual Clearance - Determine that all required work has been completed.
Look for settled dust, paint chips or debris in work area. If located, cleanings will commence until visual inspection locates no evidence of dust.

2. The Owner's Consultant shall perform Dust and/or Soil Sampling as outlined in the U.S. Department of Housing and Urban Development "Guidelines for the Evaluation and Control of Lead-Based Paint Hazards in Housing".

B. Chemical Stripping: Assumed Exposure (50 ug/m^3 - 500 ug/m^3)

Chemical stripping, using an agent approved by the Owner's Consultant, followed by wet scraping is the preferred method of abatement for areas where torch cutting, welding and/or other hot-work will affect building components coated with lead-based paint or lead containing coatings. The specific stripping agent(s) proposed must be approved by the Owner. No chemical strippers containing methylene chloride shall be used by the Contractor on this project.

1. Horizontal surfaces directly below and at least 10' in a radial direction from the area where chemical stripping is to be performed shall be protected with 6-mil poly.

2. All LBP on specified surfaces shall be removed to the bare substrate. The job is not considered complete until the substrate is dry and free of paint, debris, and LBP residue.

3. LBP stripping agents shall be brushed or troweled on the designated surfaces, or otherwise applied in accordance with manufacturer's specifications. The minimum thickness of chemical stripping agent applied shall be 0.125 (1/8) inches or the manufacturer's recommendations.

4. Stripping agents shall not be applied to, nor be allowed to inadvertently penetrate, wood and/or other porous substrates.

5. The required dwell time for stripping will depend upon the ambient temperature, humidity, and thickness of LBP. If LBP is not completely removed following the initial application of stripper, a second application and wet scraping may be required.

6. Removed LBP shall not be deposited on the polyethylene containment surfaces but shall be transferred directly into 6-mil polyethylene bags from the scraper. LBP shall be removed by wet scraping to the maximum extent feasible.

7. Any residue not removable by wet scraping shall be washed down to the bare metal substrate with a high-phosphate solution. LBP-contaminated wastewater shall be kept to a minimum using wet scrub brushes or sponges. These residues and disposable cleaning media shall also be directly transferred to the 6-mil polyethylene bags containing other LBP wastes. Free standing water shall be eliminated by use of a drying agent.

8. Clearance will be performed as follows:

   a. Visual Clearance - Determine that all required work has been completed.
   Look for settled dust, paint chips or debris in work area. If located, cleanings will commence until visual inspection locates no evidence of dust.

b. The Owner's Consultant shall perform Dust and/or Soil Sampling as outlined in the U.S. Department of Housing and Urban Development "Guidelines for the Evaluation and Control of Lead-Based Paint Hazards in Housing".

C. Manual Demolition/Scraping/Cleaning: Assumed Exposure (50 ug/m^3 - 500 ug/m^3)

Manual demolition, scraping, manual sanding and power tool cleaning with dust collection systems shall be performed in conjunction with engineering and work practice controls meeting the requirements of 29 CFR 1926.62(e)(1).

Seal openings of HVAC ductwork and other penetrations (doors, windows, etc.) within the Control Area with two layers of 6-mil polyethylene sheeting. For work on vertical surfaces, place a layer of 6-mil polyethylene sheeting below the area prior to manual demolition/scraping/ cleaning. The sheeting shall extend 5 ft. on either side of the work area, to catch any paint chips that may become dislodged.

Wet methods shall be used during manual scraping, manual sanding and power tool cleaning with dust collection systems. Local HEPA ventilation shall be utilized in conjunction with manual scraping, manual sanding and power tool cleaning with dust collection systems. In the case that local HEPA ventilation is not sufficient to control dust hazards, the Contractor shall be required to install engineering controls to meet requirements of Specification Section 1.8(D) "Negative Air Pressure System".

Removed LBP shall not be allowed to accumulate on surfaces within the Control Area, but shall be HEPA vacuumed or placed directly into 6-mil polyethylene bags. The Contractor shall maintain all surfaces as free as practicable of accumulated lead dust to prevent the dispersal of lead into the work place. LBP shall be removed by manual methods to the maximum extent feasible.

Debris shall be bagged in 6-mil polyethylene bags and secured in leak proof drums until TCLP testing is completed. Follow proper disposal requirements. The area around the surfaces subject to work shall be wet wiped and HEPA vacuumed, including the polyethylene sheeting. Upon clearance by the Owner's Consultant, the polyethylene sheeting shall be carefully folded in on itself and placed in a 6mil disposal bag. Containment debris shall be properly disposed of as lead-based waste.

Clearance will be performed as follows and as needed:

a. Visual Clearance – determine that all required work has been completed. Look for settled dust, paint chips or debris in work area. If located, cleanings will commence until visual inspection locates no evidence of dust.

D. Alternative Lead Work Procedures

1. Any Work Procedure other than the outline procedures above, shall be submitted to the Owner's Consultant for approval prior to the start of the project. As there are many different components in differing areas of the building(s), it is impractical to address every potential lead work procedure. The intent of alternative lead work procedures shall be to maintain

compliance with 29 CFR 1926.62 and maintain airborne concentrations of lead dust below the Action Level of 30 ug/dL of air.

3.3 MONITORING & CLEARANCE SAMPLING

During the entire LBP removal and disposal operations, the Owner's Consultant shall be on-site directing the monitoring/sampling and inspecting the work to ensure that the health and safety requirements of this contract are satisfied.

A. Personnel Air Monitoring (Provided by the Contractor, as necessary)

1. Personnel air monitoring samples for airborne concentrations of lead shall be collected and analyzed in accordance with 29 CFR Part 1926.62. Results shall be reported in micrograms per cubic meter of air. The Competent Person shall use personal air monitoring results to determine the effectiveness of engineering controls, the adequacy of PPE and to determine if proper work practices are being employed. The Owner's Consultant shall be notified if any personal air monitoring result equals or exceeds 30 micrograms per cubic meter of air. The Contractor shall take steps to reduce the concentration of lead in the air.

B. Area Air Monitoring (Provided by the Owner's Consultant, as requested)
Airborne concentrations of lead shall be collected and analyzed in the laboratory. Results shall be reported in micrograms per cubic meter of air.

1. Pre-LBP work
Pre- LBP work samples shall be collected in the following locations: I) inside the lead control area, one upwind of the LBP work and two downwind of the LBP work procedure activities; and 2) outside the physical boundary (roped off) area, one upwind of the LBP work and two downwind of the LBP work activities. A total of six (6) samples. If work is performed inside the building, similar numbers of samples are to be positioned inside and outside the LBP containment area.

2. LBP Work
The Competent Person shall collect area air samples on a daily basis during the duration of the LBP work. The samples shall be collected in the same location as the pre-work samples.

3. The area air samples shall be collected at 4 to 6 feet above grade, and using high volume air samplers.

4. The air samples shall be analyzed by NIOSH Method 7082 or method approved by Engineer.

5. Results
The Contractor shall have the results of the area air monitoring within 24 hours after completion of the sampling. Results shall be reported in micrograms per cubic meter of air.

6. Excessive Levels

Outdoor LBP work shall cease and the Owner's Consultant notified if measured airborne lead concentrations, collected during LBP activities, exceed the pre-work airborne concentration levels. The Contractor may be required to clean and re-sample the affected area, at no additional cost to the Owner, if directed by the Owner's Consultant. The Contractor shall correct the work practices and/or engineering controls and shall resume LBP work procedures at the direction of the Owner's Consultant.

3.4 ADJACENT AREAS

Damage to adjacent areas shall be repaired to the approval of the Owner.

3.5 CLEAN-UP & DISPOSAL

A. Cleanup

1. Daily
   Surfaces in the LBP control area shall be maintained free of accumulations of paint chips, LBP debris, blasting debris and dust. Spread of dust and debris shall be restricted; waste shall not be distributed over the work area. Dry sweep or compressed air shall not be used for cleanup. At the end of each shift, the area shall be cleaned of visible lead paint contamination by vacuuming with a HEPA filtered vacuum cleaner and wet wiping the area. LBP work procedures work shall cease during the cleanup.

2. At Completion of LBP work Procedure and a satisfactory visual inspection by the Engineer, a clean-up shall be performed by the Contractor. This clean-up includes removal of any contaminated material, equipment or debris including polyethylene sheeting from the work area. The polyethylene sheeting shall be sprayed or misted with water for dust control, construction debris removed and then the sheeting removed by folding it in upon itself.
   a. Lead-contaminated debris shall be containerized in accordance with paragraph 3.5.C.1, LBP Wastes and Lead-Contaminated Wastes. Waste bags shall not be overloaded, shall be securely sealed and stored in the designated area until disposal.

   b. Removal of surface polyethylene sheeting shall begin from top to bottom. Removal of floor polyethylene sheeting shall begin at the corners and folded in the middle to contain the dust. Polyethylene shall be disposed of as specified in Paragraph 3.5.C.l

   c. Cleaning Equipment. The Contractor shall decontaminate the lead abatement equipment and equipment used in the work area. The wastewater from cleaning shall be contained, sampled and disposed of as specified in Paragraph 3.5.C.2.

B. Certification
   The Contractor shall certify in writing that the inside and outside the lead control area air monitoring samples are less than 30 micrograms per cubic meter of air, the respiratory protection for the employees was adequate, the work procedures were performed in accordance with 29 CFR Part 1926.62 and that there was no visible accumulations of lead-based paint and dust on the worksite. Do not remove warning signs at the lead control area or roped-off boundary signs prior to the Owner's Consultant's receipt of the Contractor's certification. Re-clean areas showing dust, residual paint chips. LBP debris and blasting debris.

Waste Storage, Sampling/Analysis and Disposal (Provided by the Contractor)

1. LBP Wastes and Lead-Contaminated Water

LBP waste, and lead-contaminated waste and debris shall be stored sampled and analyzed and disposed of as follows.

a. The LBP waste and debris, lead contaminated personal protective equipment (PPE), clothing and waste polyethylene and lead-contaminated waste and debris shall be containerized in DOT approved containers (i.e.. 55 gallon drums, roll-off, etc.). If the waste is placed in roll-off(s), the roll off shall be lined with a minimum of 2 layers of'6-il polyethylene prior to placing any waste in it and covered with a liquid tight cover. Each container shall be labeled to identify the type of waste as defined in 49 CFR Part 172, 6 NYCRR Part 371 and 6 NYCRR Part 360 and with the date lead contaminated wastes were first put into the container.

b. A representative sample of the container(s) of LBP wastes and lead-contaminated wastes and debris generated by the LBP activities shall be taken in accordance with SW-. 846, Chapter 9, Sampling Plan and analyzed in the laboratory for TCLP lead by EPA Methods 1311 (extraction) and 6010 (analysis). If the wastes are placed in roll-off(s), four (4) composite samples per roll-off shall be taken for analysis. If the wastes are placed in *55* gallon drums, one composite sample for every ten (10) drums of wastes shall be taken for analysis. The laboratory analyses results shall dictate the proper method of disposal of the waste. A copy of the results shall be attached to the waste characterization (waste profile) form.

c. A waste characterization (waste profile) form shall be completed for the LBP waste and lead-contaminated waste and debris, and lead contaminated personal protective equipment and clothing (if containerized separately) and the forms submitted to Owner's Consultant for approval The Owner shall sign the forms. The Contractor shall process the forms and forward to the disposal facility for approval. The approved waste profile forms from the disposal facility shall be submitted to the Owner and Engineer prior to shipment of the wastes off-site.

d. The applicable waste transportation and disposal documents (i.e., hazardous waste manifest, bill of lading, non-hazardous waste manifest, land disposal restriction notification, etc.) shall be obtained and completed. An example of the completed waste transportation and disposal documents shall be submitted to Owner's Consultant for approval prior to shipment of the waste off-site.

e. Pick-up of hazardous wastes shall be made as needed to ensure that containers do not remain on the work site longer than 90 calendar days from the date affixed to each container. The Owner will assign an area for interim storage of waste-containing containers.

f. Lead contaminated personal protective equipment/ clothing, lead contaminated polyethylene, filters and debris, which cannot be sampled, shall be handled, stored, transported, and disposed of in the same manner as the LBP wastes and lead-contaminated wastes and debris, based on the sampling, laboratory analyses results and SW-846, Chapter 9, Sampling Plan calculations performed on the LBP wastes and lead-contaminated wastes and debris.

g. The LBP and lead contaminated wastes/ debris shall be handled, stored, transported and disposed of in accordance with 40 CFR Parts 260 to 265, 6 NYCRR Par 370 to 373, 6 NYCRR Part 364 and 6 NYCRR Part 360, as applicable. Additionally, the disposal shall be based on the sampling, laboratory analysis results and SW-846, Chapter 9, Sampling Plan calculations. Land disposal restriction notification shall be as required by 40 CFR Part 268 and 6 NYCRR Part 376.

2. Wastewater and Decontamination Water

a. Lead contaminated wastewater and decontamination water generated from the LBP work procedures shall be stored in DOT approved 55 gallon drums. Each drum shall be labeled to identify the type of waste as defined by 49 CFR Part 172, 6 NYCRR Part 371 and 6 NYCRR Part 360 and with the date lead contaminated liquid was first put into the drum.

b. A representative sample from the drum(s) of liquid wastes shall be taken in accordance with SW-846, Chapter 9, Sampling Plan and analyzed in the laboratory for total lead and total cadmium by EPA Method 200.7/6010. One composite sample for every ten (10) drums of liquid wastes shall be taken for analysis. The laboratory analyses results shall dictate the proper method of disposal of the waste. A copy of the results shall be attached to the waste characterization (waste profile) form.

c. A waste characterization (waste profile) form shall be completed for the liquid wastes and other wastes being generated and submitted to Owner's Consultant for approval. The Owner shall sign the form(s). The Contractor shall process the form(s) and forward the forms to the disposal facility for approval. The approved waste profile form(s) from the disposal facility shall be submitted to the Owner and Engineer prior to shipment of the wastes off-site.

d. The applicable waste transportation and disposal documents (i.e., hazardous waste manifest, bill of lading, non-hazardous waste manifest, land disposal restriction notification, etc.) shall be obtained and completed. An example of the completed waste transportation and disposal documents shall be submitted to Owner's Consultant for approval prior to shipment of the waste off-site.

e. The lead contaminated wastewater and decontamination water shall be handled, stored, transported and disposed of in accordance with 40 CFR Parts 260 to 265, 6 NYCRR Part 370 to 373, 6 NYCRR Part 364 and 6 NYCRR Part 360 as applicable.

3. Waste Pick-Up and Disposal

a. Waste pick-up cannot be performed until all required submittals have been reviewed and approved by the Owner's Consultant. The Owner must be present at waste pick-up to sign the waste transportation documents and approve pick-up. No waste shall leave the site without approval and authorization by Owner.

b. Coordinate scheduling of waste pick-up and transportation with Owner's Consultant. Notify Engineer at least 48 hours ahead of when the waste pick-up will take place.

c. All wastes shall be properly disposed of off-site at an approved disposal facility. The wastes shall be transported by a transporter permitted to transport wastes per 6 NYCRR Part 364. The wastes shall be disposed of at a facility permitted to accept the waste being disposed of.

d. Submit copy of completed and signed transportation and disposal documents to Owner and Engineer at time of shipment and submit copy of document signed by the disposal facility.

e. Return or cause to be returned all waste manifests and bills of lading signed by the disposal facility within fifteen *(15)* days of removal from the project site.

f. Submit certification of destruction for all incinerated wastes and certificates of final treatment and/or final disposal, as applicable, for all wastes disposed of off-site.

g. All waste transportation and disposal must be conducted in accordance with all applicable State, Local and Federal regulations, all generator State regulations, all the State regulations where the wastes are transported through, and the disposal State regulations.

C. Payment for Disposal of Wastes

Payment for disposal of wastes will not be made until the following are received by the Owner:

1. A signed copy of the manifests
2. Bills of lading
3. Weight tickets, etc.
4. Certificate of final disposal, from the final treatment or disposal facility certifying the amount of lead containing wastes and debris delivered.

PART 4 – INSPECTION

4.1 SUMMARY OF INSPECTION

Limited lead-based paint inspection(s) were completed throughout specific Renovation Areas as detailed on written narratives provided by the Town of New Windsor to identify suspect lead-based paints and/or lead-containing hazards potentially affected by scheduled demolition/renovation activities included within the ***Town of New Windsor Caesars Lane WWTP Expansion Project: Phase 2*** as detailed within Section #1.2 of this specification.

The inspection was completed by **QuES&T** Niton-certified XRF Technician(s). Paint testing was completed on-site utilizing a Viken Pb200e XRF Spectrum Analyzer Serial in accordance with the EPA issued Performance Characteristics Sheet (PCS) and paint chip sampling. A summary of results above the EPA action level of 1.0 mg/sq. cm., has been included to aid prospective bidders.

The survey was completed in accordance with EPA, OSHA and/or HUD Guidelines for inspection of lead-based paint(s) and/or lead-containing material(s). Per these protocols, all suspect coated surfaces impacted by demolition/renovation activities were located and categorized by homogeneous painting histories and component types.

4.2 SUMMARY OF RESULTS ABOVE THE EPA ACTION LEVEL OF 1.0 mg/cm^2

The following is a detailed listing of identified Lead-based Paint(s) and/or Lead-containing Materials, above the EPA action level of 1.0 mg/sq. cm. The following listing should be utilized as a guide to specific work-related tasks and is not necessarily an Abatement Scope. Specified lead-safe work practices shall be performed in accordance with the stipulations defined within this specification as required by specific work-related tasks and in advance of disturbance(s) of the following Lead-based Paint(s) and/or Lead-containing Material(s), above the EPA action level of 1.0 mg/sq. cm:

TABLE I: IDENTIFIED LEAD-BASED PAINT
TOWN OF NEW WINDSOR
CAESARS LANE WWTP
EXPANSION PROJECT: PHASE 2

Location	LBP Component	Substrate	Color	LBP Condition
Dewatering Building				
Bypass Building	Steel Beams/Columns	Metal	Blue	Poor
Primary Tank #1, Primary Tank #3, & Trickling Filter #2	Outer Railing	Metal	Grey	Poor
Trickling Filter #1 & Trickling Filter #2	Catwalk Supports	Metal	Red	Poor
Trickling Filter #1 & Trickling Filter #2	Filter Motor	Metal	Blue	Poor

It should be noted that several components tested did in fact contain minimal lead-levels below the EPA threshold level of 1.0 mg/sq. cm for classification as Lead-Based Paint (LBP) and are considered lead-containing coatings by the OSHA Regulation, "Lead Exposure in Construction" (29 CFR 1926.62). OSHA does not recognize a minimum limit for lead concentrations in paint for the purposes of disturbance. Monitoring of workers performing demolition/cleaning/disturbance of painted surfaces shall be completed to document personnel occupational exposure. Items containing any amount of lead concentration are considered lead-containing coatings per 29 CFR 1926.62, OSHA Lead Exposure in Construction.

THIS PAGE LEFT BLANK INTENTIONALLY

END OF SECTION

SECTION 028200
ASBESTOS ABATEMENT

PART I – GENERAL

1.01 DESCRIPTION

A. All work under this contract shall be performed in strict accordance with the specifications and all applicable laws for asbestos removal projects. The Abatement Contractor shall furnish all labor, materials, supervision, services, insurance and equipment necessary for the complete and total removal of Asbestos-containing Materials (ACM) as described herein, in attachments to the specification, Job Specific Variance(s) and/or as directed by the ***Town of New Windsor*** (here-in-after the "Owner") and/or the Owners Representative(s) to support the ***Caesars Lane WWTP Expansion Project: Phase 2.***

B. Abatement Contractor shall provide for personnel air monitoring to satisfy OSHA regulation 29 CFR Parts 1926.1101(f). All work performed shall be in strict accordance with applicable provisions and regulations promulgated under New York State Department of Labor, Industrial Code 56 (ICR-56).

C. The Abatement Contractor shall satisfy the requirements for asbestos projects issued by the New York State Department of Labor concerning licensing and certification; notification; equipment; removal and disposal procedures; engineering controls; work area preparation; decontamination and clean-up procedures; and personnel air monitoring.

D. The Abatement Contractor shall be responsible for submittal of asbestos project notification(s) and applicable fees to EPA and NYSDOL concerning this project. Project notification(s) shall be made for the cumulative total of ACM to be removed as required by ICR-56-3.4. Work practices for each individual work area established shall be consistent with the quantity of ACM contained within that work area as defined in ICR-56-2.

E. The scope of work under this contract shall include the following:

1. All asbestos-containing materials (ACM) shall be removed in accordance with these specifications. The Abatement Contractor is responsible for field verification of estimated quantities, locations and other site conditions that may affect work.

2. All fixed objects remaining within the work area(s) shall be protected as required by Title 12 NYCRR Section 56-7.10(b) and as described in these specifications.

3. The containerization, labeling and disposal of all asbestos waste in accordance with applicable city, state and federal regulations and these specifications.

4. The Abatement Contractor will be responsible for repairing all building components damaged during abatement including, but not limited to, ceiling tiles, ceiling finishes, wall finishes and/or floor finishes, etc.

5. The Abatement Contractor shall be responsible for any and all demolition required to access materials identified in scope of work and on associated drawings.

6. Concealed conditions that are exposed and may require additional work shall be brought to the attention of the Owner(s) immediately. The Abatement Contractor shall not abate these areas without a written notice to proceed. If the Abatement Contractor removes additional asbestos prior to the order to proceed the additional work will not be acknowledged.

7. Permissible working hours shall be Monday through Friday 7:00 A.M. to 4:00 P.M. and/or as defined by the Owner(s) and/or Owner's Representative(s). Holidays shall be considered weekends and not included for working days. Upon written approval from the Owner, the Abatement Contractor may work past these hours. The Abatement Contractor will incur any and all costs associated for work performed beyond the defined schedule including, but not limited to: abatement activities, project/air monitoring, custodial/staffing labor, overtime, mobilizations, etc.

8. Buildings will be turned over to the Abatement Contractor as is. At that time, all electrical services and HVAC systems in the proposed work areas will be shut down. Electricity and water supply will be maintained in the building for use by the Abatement Contractor. The Abatement Contractor is responsible for securing all power in the work area(s) and establishing all temporary GFCI hookups necessary to complete his work.

9. The Abatement Contractor shall remove all identified Asbestos-containing Materials (ACM) to building substrate(s); in areas indicted. Subsequent to final air clearances, the substrate(s) shall be washed with a neutralizing agent to prepare the substrate to accept new floor covering and eliminate residual odors.

10. The Abatement Contractor must coordinate location of waste containers with the Facility and the Owner. Deliveries and storage of equipment must be coordinated with the Facility and the Owner.

11. All "Large" and "Small" asbestos abatement projects, as defined by 12 NYCRR56 shall not be performed while the building is occupied. The term "building" means a wing or major section of a building that can be completely isolated from the rest of the building with sealed non-combustible construction. The isolated portion of the building must contain exists that do not pass through the occupied portion(s) and ventilation systems must be physically separated and sealed at the isolation barriers.

1.02 PRE-CONTRACT SUBMITTALS

Within three (3) days after bids are opened, the three (3) apparent low bidders shall be required to submit the following documentation:

A. Resume': Shall include the following:

1. Provide a list of projects of similar nature performed within the past two (2) years and include the dollar value of all projects. Provide project references to include owner, consultant, and air monitoring firms' name, contact person, address, and phone number, include location of project and date of completion.

2. Abatement Contractor license issued by New York State Department of Labor for asbestos work in accordance with ICR-56-3.

3. A list of owned equipment available to be used in the performance of the project.

4. The number of years engaged in asbestos removal.

5. An outline of the worker training courses, and medical surveillance program conducted by the Abatement Contractor.

6. A standard operating procedures manual describing work practices and procedures, equipment, type of decontamination facilities, respirator program, special removal techniques, etc.
7. Documentation to the satisfaction of the Owner pertaining to the Abatement Contractor's financial resources available to perform the project. Such data shall include, but not be limited to, the firm's balance sheet for the last fiscal year.

B. Citations/Violations/Legal Proceedings

1. Submit a notarized statement describing any citations, violations, criminal charges, or legal proceedings undertaken or issued by any law enforcement, regulatory agency, or consultant concerning performance on previous asbestos abatement contracts. Briefly describe the circumstances citing the project and involved persons and agencies as well as the outcome of any actions.

2. Answer the question: "Has your firm or its agents been issued a Stop Work order on any project within the last two years?" If "Yes" provide details as discussed above.

3. Answer the question: "Are you now, or have you been in the past, a party to any litigation or arbitrations arising out of your performance on Asbestos Abatement Contracts?" If "Yes" provide details as discussed in 1. above.

4. Describe any liquidated damages assessed within the last two years.

C. Preliminary Schedule

1. Provide a detailed schedule including work dates, work shift times, estimate of manpower to be utilized and the start and completion date for completion of each major work area.

1.03 DOCUMENTATION

A. The Abatement Contractor shall be required to submit the following and receive the Consultant's approval prior to commencing work on this project:

1. Provide documentation of worker training for each person assigned to the project. Documentation shall include copies of each workers valid New York State asbestos handler certificates (for those employees who may perform asbestos removal), documentation of current respirator fit test and current OSHA required training and medical examination.

2. The attached "Asbestos Employee Medical Examination Statement" and "Asbestos Employee Training Statement" forms shall be completed, signed and submitted for each worker assigned to the project. Records of all employee training and medical surveillance shall be maintained for at least forty (40) years. Copies of the records shall be submitted to the Consultant prior to commencement.

3. The Abatement Contractor shall submit proof of a current, valid license issued by the New York State Department of Labor pursuant to the authority vested in the Commissioner by section 906 of the Labor Laws, and that the employees performing asbestos related work on this project are certified by the State of New York as required in Part 56 of Title 12 of the Official Compilation of Codes, Rules and Regulations of the State of New York latest edition. Copies of all licenses shall be submitted prior to the commencement of the project.

4. The Abatement Contractor shall submit a written respiratory protection program meeting the requirements of 29 CFR 1910.134 to the Consultant.

5. The name, address, social security number and NYS DOL certificate number of the person(s) who will supervise the asbestos project.

6. The name and address of the deposit or waste disposal site or sites where the asbestos materials are to be deposited or disposed of. This site must be approved by the Owner. The manifesting procedure must also be specified.

7. The name, address and New York State Dept. of Environmental Conservation ID Number of any transporters that are to be used to transport waste.

8. A written Standard Operation Procedure (SOP) that is designed and implemented to maximize protection against human exposure to asbestos dust. The SOP shall take into consideration the workers, visitors, building employees, general public and environment. As a minimum the procedures must include the following:

   a. Security for all work areas on an around-the-clock basis against unauthorized access.

   b. Project organization chart including the phone numbers of at least two responsible persons who shall be authorized to dispatch men and equipment to the project in the event of an emergency; including weekends.

   c. Description of protective clothing and NIOSH approved respirators to be used.

   d. Description of all removal methods to be used, including HEPA air filtration and decontamination sequence with special emphasis on any procedure that may deviate from these specifications.

   e. A list of manufacturers' certificates stating that all vacuums, negative air filtration equipment, respirators and air supply equipment meet OSHA and EPA requirements.

   f. A list of all materials proposed to be furnished and used under this contract.

g. Emergency evacuation procedures in the event of fire, smoke or accidents such as injury from falling, heat exposure, electrical shock, etc.

h. The name, address and ELAP number of the New York State Department of Health Certified Analytical Testing Laboratory the Contractor proposes to use for the OSHA monitoring.

9. A detailed plan, in triplicate, for the phasing of the project, division of work areas and location of decontamination facilities, waste containers and temporary office.

10. Work schedule, identifying firm dates and completion for actual areas. Bar chart or critical path chart indicating phases is required.

B. The Abatement Contractor shall post their NYS DOL contractor's license and maintain a daily log documenting the dates and time of the following items within each personal decontamination unit:

1. Meetings; purpose, attendants, discussion (brief)

2. Sign-in and sign-out of all persons entering the work area including name, date, time, social security number, position or function and general description of daily activity.

3. Testing of barriers and enclosure systems using smoke tubes prior to the beginning of abatement activities and at least once a day thereafter until satisfactory clearance air monitoring results have been achieved.

4. Inspection of all plastic barriers, twice daily, by the asbestos supervisor.

5. Loss of enclosure integrity; special or unusual events, barrier breaches, equipment failures, etc.

6. Daily cleaning of enclosures.

7. Personnel air monitoring test results for OSHA Compliance. Results shall be posted at the work site within 24 hours of testing and copies supplied to the Owner within five (5) days of testing. Abnormalities shall be supplied to the Owner immediately.

C. Documentation with confirmation signature of Consultant's representative of the following shall be provided by the Abatement Contractor at the final closeout of the project.

1. Testing of barriers and enclosure systems using smoke tubes shall be performed prior to the beginning of abatement activities and at least once a day thereafter until satisfactory clearance air monitoring results have been achieved.

2. Inspection of all plastic barriers.

3. Removal of all polyethylene barriers.

4. Consultant's inspections prior to encapsulation.

5. Removal of waste materials.

6. Decontamination of equipment (list items).

7. Consultant's final inspection/final air tests.

D. The Abatement Contractor shall provide records of all project information, to include the following which shall be submitted upon completion of the project and prior to approval of the Abatement Contractor's payment application:

1. The location and description of the abatement project.

2. The name, address and social security number of the person(s) who supervised the asbestos project.

3. Certified payroll documentation Pursuant to Article 8, Section 220 of the NYS Labor Law

4. Copies of EPA/NYSDOL Asbestos Certificates for all Workers and Supervisors employed on the Project.

5. Copies of Medical Approval and Respirator Fit Testing for all Asbestos Workers and Supervisors employed on the Project.

6. Copies of Abatement Contractors Daily Sign-In Sheets & Logs for persons entering and leaving the work area. – Title 12 NYCRR Part 56-7.3.

7. Copies of Abatement Contractor's personal air sampling laboratory results.

8. The amounts and type of asbestos materials that was removed, enclosed, encapsulated, or disturbed.

9. The name and address of the deposit or waste disposal site or sites where the asbestos waste materials were deposited or disposed of and all related manifests, receipts and other documentation associated with the disposal of asbestos waste.

10. The name and address of any transporters used to transport waste and all related manifests, receipts and other documentation associated with the transport of asbestos waste.

11. All other information that may be required by state, federal or local regulations.

12. Copy of the Supervisor's Daily Project Log of events as described in 1.03 B, above.

1.04 NOTIFICATIONS AND PERMITS

A. The Abatement Contractor shall be required to prepare and submit notifications to the following agencies at least ten (10) days prior to the commencement of the project:

1. Asbestos NESHAPS Contact
   U.S. Environmental Protection Agency
   NESHAPS Coordinator, Air Facilities Branch
   26 Federal Plaza
   New York, New York 10007
   (212) 264-7307

2. State of New York Department of Labor
   Division of Safety and Health
   Asbestos Control Bureau
   State Office Building Campus, Building 12, Room 454
   Albany, New York 12240

3. Owner(s): Town of New Windsor
   555 Union Avenue
   New Windsor, NY 12553
   ATTN: Michael Weeks, Town Engineer
   Ph. (845) 563-4618
   E-mail. mweeks@mhepc.com

4. Environmental Consultant(s): Quality Environmental Solutions & Technologies, Inc. (QuES&T)
   1376 Route 9
   Wappingers Falls, New York 12590
   ATTN: Rudy Lipinski, Director of Field Operations
   Ph. (845) 298-6031
   E-mail. rlipinski@qualityenv.com

B. The notification shall include but not be limited to the following information:

1. Name and address of Owner.

2. Name, address and asbestos handling license number of the Abatement Contractor.

3. Address and description of the building, including size, age, and prior use of the building or area; the amount, in square feet or linear feet of asbestos material to be removed; room designation numbers or other local information where asbestos material is found, including the type of asbestos material (friable or non-friable).
4. Scheduled starting and completion dates for removal.

5. Methods to be employed in abating asbestos containing materials.

6. Procedures and equipment, including ventilating/exhaust systems, that will be employed to comply with the Code of Federal Regulation (CFR) Title 40, Part 61 of the U.S. Environmental Protection Agency.

7. The name and address of the carting company and of the waste disposal site where the asbestos waste will be deposited.

NOTE: Notifications shall be submitted using standard forms as may be used by the respective agency.

For DOL (NYS) include "Asbestos Project Notification" form (DOSH-483) with proper fee, if required. For EPA include "Notification of Demolition and Renovation"; 40 CFR Part 61.

C. The Abatement Contractor shall secure any permits required by the city, town, county, or state that may be required and the cost for obtaining the permit shall be included in his base bid.

D. The Abatement Contractor shall erect warning signs around the work space at every point of potential entry into the work area in accordance with OSHA 1926.58k (2), (i). These signs shall bear the following information:

DANGER

CANCER AND LUNG DISEASE HAZARD
AUTHORIZED PERSONNEL ONLY
RESPIRATORS AND PROTECTIVE
CLOTHING
ARE REQUIRED IN THIS AREA

E. The Abatement Contractor shall post at entrances to the work place and immediate adjacent areas, notifications to building occupants which include the name and license number of the contractor, project location and size, amount and type of ACM, abatement procedures, dates of expected occurrence and name and address of the air monitor and laboratory in compliance with ICR 56-3.6.

F. The Abatement Contractor shall post a list of emergency telephone numbers at the job site which shall include the Owner's Representative, police, emergency squad, local hospital, Environmental Protection Agency, N.Y. State Department of Labor, Occupational Safety and Health Administration and the local Department of Health.

1.05 APPLICABLE STANDARDS

Except to the extent that more explicit or more stringent requirements are written directly into the contract documents, applicable standards of the construction industry have the same force and effects (and are made a part of contract documents by reference) as if copied directly into contract documents, or as if published copies were bound herewith. Resolution of overlapping and conflicting requirements, which result from the application of several different industry standards to the same unit of work, shall be by adherence to the most stringent requirement.

A. Applicable standards listed in these Specifications form a part of this Specification and include, but are not necessarily limited to, standards promulgated by the following agencies and organizations:

1. ANSI:

American National Standards Institute
1430 Broadway
New York, New York 10018

2. ASHRAE:
   American Society for Heating, Refrigerating
   and Air Conditioning Engineers
   1791 Tullie Circle NE
   Atlanta, Georgia 30329

3. ASTM:
   American Society for Testing and Materials
   1916 Race Street
   Philadelphia, Pennsylvania 19103

4. CFR
   Code of Federal Regulations Available
   from Government Printing Office
   Washington, District of Columbia 20402

5. CGA
   Compressed Gas Association
   1235 Jefferson Davis Highway
   Arlington, Virginia 22202

6. CS
   Commercial Standard of NBS
   (US Dept. of Commerce)
   Government Printing Office

7. EPA
   Environmental Protection Agency, Region II
   26 Federal Plaza
   New York, New York 10007
   Asbestos Coordinator - Room 802
   (212) 264-9538
   Part 61, Sub-Parts A & B
   National Emission Standard for Asbestos

8. FEDERAL SPECS
   Federal Specification (General Services Administration)
   7th and D Street, SW
   Washington, District of Columbia 20406

9. NBS
   National Bureau of Standards
   (US Department of Commerce)
   Gaithersburg, Maryland 20234

10. NEC
    National Electrical Code (by NFPA)

11. NFPA
    National Fire Protection Association
    Batterymarch Park
    Quincy, Massachusetts 02269

12. NIOSH
    National Institute for Occupational Safety and Health
    26 Federal Plaza
    New York, New York 10007

13. NYSDOH
    New York State Department of Health
    Bureau of Toxic Substance Assessment
    Room 359 - 3rd Floor
    Tower Building Empire State Plaza
    Albany, New York 12237

14. NYSDEC
    New York State Department of Environmental Conservation
    Room 136
    50 Wolf Road
    Albany, New York 12233-3245

15. NYSDOL
    State of New York Department of Labor
    Division of Safety and Health
    Asbestos Control Program
    State Campus
    Building 12
    Albany, New York 12240

16. OSHA
    Occupational Safety and Health Administration
    (US Department of Labor)
    New York Regional Office - room 3445
    1515 Broadway
    New York, New York 10036

17. UL
    Underwriters Laboratories
    333 Pfingsten Road
    Northbrook, Illinois 60062

B. Federal Regulations: Those which govern asbestos abatement work or hauling and disposal of asbestos waste materials:

1. U.S. Department of Labor, Occupational Safety and Health Administration, (OSHA):

a. Asbestos Regulations
Title 29, Part 1910, of the Code of Federal Regulations.

b. Respiratory Protection
Title 29, Part 1910, Section 134 of the Code of Federal Regulations.

c. Construction Industry
Title 29, Part 1926, of the Code of Federal Regulations.

d. Access to Employee Exposure & Medical Records
Title 29, Part 1910, Section 20 of the Code of Federal Regulations.

e. Hazard Communication
Title 29, Part 1910, Section 1200 of the Code of Federal Regulations.

f. Specifications for Accident Prevention Signs and Tags
Title 29, Part 1910, section 145 of the Code of Federal Regulations.

2. U.S. Environmental Protection Agency (EPA):

a. Asbestos Hazard Emergency Response Act (AHERA) Regulation Asbestos Containing Materials in Schools Final Rule & Notice Title 40, Part 763, Subpart E of the Code of Federal Regulations.

b. Worker Protection Rule
40 CFR Part 763, Subpart G, CPTS 62044, FLR 2843-9
Federal Register, Vol. 50, No. 134, 7/12/85, P28530-28540

c. Regulation for Asbestos
Title 40, Part 61, Subpart A of the Code of Federal Regulations

d. National Emission Standard for Asbestos
Title 40, Part 61, Subpart M (Revised Subpart B) of the Code of Federal Regulations

e. Resource Conservation and Recovery Act (RCRA) 1976, 1980
Hazardous and Solid Waste Amendments (HSWA) 1984
Subtitle D, Subtitle C

3. U.S. Department of Transportation (DOT):

a. Hazardous Substances: Final Rule Regulation 49 CFR, Part 171 and 172.

C. State Regulations: Those which govern asbestos abatement work or hauling and disposal of asbestos waste materials:

1. New York State Department of Environmental Conservation (DEC) Regulations regarding waste collection registration. Title 6, Part 364 of the New York State Official Compilation of Codes, Rules and Regulations - 6NYCRR 364.

2. New York State Right-To-Know Law

3. New York State Department of Labor Asbestos Regulations Industrial Code Rule 56.

4. New York State Department of Health, Title 10 Part 73 Asbestos Safety Program Requirements.

D. Standards: Those which govern asbestos abatement work or hauling and disposal of asbestos waste materials:

1. American National Standards Institute (ANSI)

   a. Fundamentals Governing the Design and Operation of Local Exhaust Systems Publication Z9.2-79

   b. Practices for Respiratory Protection Publication Z88.2-80

E. Guidance Documents: Those that discuss asbestos abatement work or hauling, and disposal of asbestos waste materials are listed below only for the Abatement Contractor's information. These documents do not describe the work and are not a part of the work of this contract.

EPA:

1. Guidance for Controlling Asbestos Containing Materials in Buildings (Purple Book) EPA560/5-85-024.

2. Asbestos Waste Management Guidance EPA 530-SW-85-007.

F. Patents and Royalties: The Abatement Contractor shall pay all royalties and/or license fees. The Abatement Contractor shall defend all suits and claims for infringement of any patent rights and save the Owner and Consultant harmless from loss including attorney fees on account thereof.

1.06 DEFINITIONS

As used in or in connection with these specifications the following are terms and definitions.

Abatement - Procedure to control release from asbestos material. This includes removal, encapsulation and enclosure.

Aggressive sampling - A method of sampling in which the person collecting the air sample creates activity by the use of mechanical equipment during the sampling period to stir up settled dust and simulate activity in that area of the building.

AIHA - The American Industrial Hygiene Association, 475 Wolf Ledges Parkway, Akron, Ohio 44311.

Airlock - A system for permitting entrance and exit while restricting air movement between a containment area and an uncontaminated area. It consists of two curtained doorways separated by a distance of at least three feet such that one passes through one doorway into the airlock, allowing the doorway sheeting to overlap and close off the opening before proceeding through the second doorway, thereby preventing flow-through contamination.

Air sampling - The process of measuring the content of a known volume of air collected during a specific period of time.

Amended water - Water to which a surfactant has been added.

Approved asbestos safety program - A program approved by the Commissioner of Health providing training in the various disciplines that may be involved in an asbestos project.

Area air sampling - Any form of air sampling or monitoring where the sampling device is placed at some stationary location.

Asbestos - Any naturally occurring hydrated mineral silicate separable into commercially usable fibers, including chrysotile (serpentine), amosite (cumingtonite-gunerite), crocidolite (riebeckite), tremolite, anthophyllite and actinolite.

Asbestos contract - An oral or written agreement contained in one or more documents for the performance of work on an asbestos project and includes all labor, goods and service.

Asbestos handler - An individual who installs, removes, applies, encapsulates, or encloses asbestos or asbestos material, or who disturbs friable asbestos. Only individuals certified by NYS Department of Labor shall be acceptable for work under this specification.

Asbestos handling certificate - A certificate issued by the Commissioner of Labor of the State of New York, to a person who has satisfactorily completed an approved asbestos safety program.

Asbestos project - Work undertaken by a contractor which involves the installation, removal, encapsulation, application or enclosure of any ACM or the disturbance of friable ACM.

Asbestos Safety Technician (AST) - Individual designated to represent the Consultant, perform third party monitoring and perform compliance monitoring at the job site during the asbestos project.

Asbestos waste material - Asbestos material or asbestos contaminated objects requiring disposal.

Authorized visitor - The building owner, his or her representative or any representative of a regulatory or other agency having jurisdiction over the project.

Background level monitoring - A method used to determine ambient airborne concentrations inside and outside of a building or structure prior to starting an abatement project.

Building owner - The person in whom legal title to the premises is vested unless the premises are held in land trust, in which instance Building Owner means the person in whom beneficial title is vested.

Clean room - An uncontaminated area or room that is a part of the personal decontamination enclosure with provisions for storage of persons' street clothes and protective equipment.

Cleanup - The utilization of HEPA vacuuming to control and eliminate accumulations of asbestos material and asbestos waste material.

Clearance air monitoring - The employment of aggressive sampling techniques with a volume of air collected to determine the airborne concentration of residual fibers upon conclusion of an asbestos abatement project.

Commissioner - Commissioner of the New York State Department of Labor.

Contractor - A company, unincorporated association, firm, partnership or corporation and any owner or operator thereof, which engages in an asbestos project or employs persons engaged in an asbestos project.

Curtained doorway - A device that consists of at least three overlapping sheets of plastic over an existing or temporarily framed doorway. One sheet shall be secured at the top and left side, the second sheet at the top and right side, and the third sheet at the top and the left side. All sheets shall have weights attached to the bottom to ensure that the sheets hang straight and maintain a seal over the doorway when not in use.

Decontamination enclosure system - A series of connected rooms, separated from the work area and from each other by air locks, for the decontamination of persons, materials, equipment, and authorized visitors.

Encapsulant (sealant) or encapsulating agent - A liquid material that can be applied to asbestos material and which prevents the release of asbestos from the material by creating a membrane over the surface.

Enclosure - The construction of airtight walls, ceilings and floors between the asbestos material and the facility environment, or around surfaces coated with asbestos materials, or any other appropriate procedure that prevents the release of asbestos materials.

Equipment room - A contaminated area or room that is part of the personal decontamination enclosure system with provisions for the storage of contaminated clothing and equipment.

Fixed object - A unit of equipment, furniture or other fixture in the work area which cannot be readily removed from the work area.

Friable Asbestos Material - That condition of crumbled, pulverized, powdered, crushed or exposed asbestos capable of being released into the air by hand pressure.

Friable material containment - The encapsulation or enclosure of any friable asbestos material.

Glovebag technique - A method for removing asbestos material from heating, ventilating, and air conditioning (HVAC) ducts, piping runs, valves, joints, elbows, and other nonplanar surfaces in a noncontained work area. The glovebag assembly is a manufactured device consisting of a glovebag constructed of at least six mil transparent plastic, two inward-projecting longsleeve gloves, which may contain an inward projecting waterwand sleeve, an internal tool pouch, and an attached, labeled receptacle or portion for asbestos waste. The glovebag is constructed and installed in such a manner that it surrounds the object or area to be decontaminated and to contain all asbestos fibers released during the abatement process.

HEPA filter - A high efficiency particulate air filter capable of trapping and retaining 99.97 percent of particulate greater than 0.3 microns equivalent aerodynamic diameter.

HEPA vacuum equipment - Vacuuming equipment with a high efficiency particulate air filtration system.

Holding area - A chamber in the waste decontamination enclosure located between the washroom and an adjacent uncontaminated area.

Homogeneous work area - A site within the abatement work area that contains one type of asbestos material and where one type of abatement is used.

Large asbestos project - An asbestos project involving the installation, removal, disturbance, enclosure, or encapsulation of 160 square feet or more of asbestos or asbestos material or 260 linear feet or more of asbestos or asbestos material.

Minor asbestos project - An asbestos project involving the installation, removal, disturbance, enclosure, or encapsulation of 10 square feet or less of asbestos or asbestos material, or 25 linear feet or less of asbestos or asbestos material.

Movable object - A unit of equipment, furniture or fixture in the work area that can be readily removed from the work area.

Negative air pressure equipment - A local exhaust system equipped with HEPA filtration. The system shall be capable of creating and maintaining a negative pressure differential between the outside and the inside of the work area.

Non-asbestos material - Any material containing one percent or less asbestos by weight.

Occupied area - Any frequented portion of the work site where abatement is not taking place.

Outside air - The air outside the building or structure.

Personal air monitoring - A method used to determine an individual’s exposure to airborne contaminants. The sample is collected outside the respirator in the person's breathing zone.

Plasticize - To cover floors, walls, ceilings and other surfaces with 6 mil fire retardant plastic sheeting as herein specified.

Project - Any form of work performed in connection with the abatement of asbestos or alteration, renovation, modification or demolition of a building or structure that may disturb asbestos or asbestos material.

Removal - The stripping of any asbestos material.

Repair - Corrective action using required work practices to control fiber release from damaged areas.

Respiratory protection - Respiratory protection required of licensed asbestos workers and authorized visitors in accordance with the applicable laws.

Satisfactory clearance air monitoring results - For all post- abatement samples, airborne concentrations of total fibers that are less than 0.01 fibers per cubic centimeter or background levels, whichever are greater, using phase contrast microscopy (PCM).

Shower room - A room between the clean room and the equipment room in the personal decontamination enclosure with hot and cold running water controllable at the top and arranged for complete showering during decontamination.

Small asbestos project - An asbestos project involving the installation, removal, disturbances, enclosure, or encapsulation of more than 10 and less than 160 square feet of asbestos or asbestos material of more than 25 and less than 260 linear feet of asbestos or asbestos material.

Staging area - The area near the waste transfer airlock where containerized asbestos waste has been placed prior to removal from the work area.

Surfactant - A chemical wetting agent added to water to improve its penetration.

Visible emissions - An emission of particulate material that can be seen without the aid of instruments.

Washroom - A room between the work area and the holding area in the waste decontamination enclosure system, where equipment and waste containers are wet cleaned and/or HEPA vacuumed.

Waste decontamination enclosure system - An area, consisting of a washroom and a holding area, designated for the controlled transfer of materials and equipment.

Wet cleaning - The process of eliminating asbestos contamination from surfaces, equipment or other objects by using cloths, mops, or other cleaning tools.

Work area - Designated rooms, spaces, or areas where asbestos abatement takes place.

Work site - Premises where asbestos abatement is taking place.

Work Surface - Substrate surface from which asbestos-containing material has been removed.

1.07 UTILITIES, SERVICE AND TEMPORARY FACILITIES

A. The Owner shall make available to the Abatement Contractor all reasonable amounts of water and electrical power at no charge.

B. The Abatement Contractor shall provide, at his own expense, all electrical, water, and waste connections, extensions, and construction materials, supplies, etc. All connections must be approved in advance by the Owner and all work relative to the utilities must be in accordance with the applicable building codes.

C. The Abatement Contractor shall provide scaffolding, ladders and staging, etc. as necessary to accomplish the work of this contract. The type, erection and use of all scaffolding, ladders and staging, etc. shall comply with all applicable OSHA provisions.

D. All connections to the Owner's water system shall include reduced pressure backflow protection or double check and double gate valves. Valves shall be temperature and pressure rated for operation of the temperatures and pressures encountered. After completion of use, connections and fittings shall be removed without damage or alteration to existing water piping and equipment. Leaking or dripping valves shall be piped to the nearest drain or located over an existing sink or grade where water will not damage existing finishes or equipment.

E. The Abatement Contractor shall use only heavy-duty abrasion resistant hoses with a pressure rating greater than the maximum pressure of the water distribution system to provide water to each work area and to each decontamination unit. Provide fittings as required to allow for connection to existing wall hydrants or spouts, as well as temporary water heating equipment, branch piping, showers, shut-off nozzles and equipment. All water must be shut off at the end of each shift.

F. The Abatement Contractor shall provide service to decontamination unit electrical subpanel with minimum 60-amp, 2 pole circuit breaker or fused disconnect and ground-fault circuit interrupters (GFCI), reset button and pilot light, connected to the building's main distribution panel. Subpanel and disconnect shall be sized and equipped to accommodate all electrical equipment required for completion of the work. This electrical subpanel shall be used for hot water heater, PAPR battery recharging and air sampling pumps.

G. The Abatement Contractor shall provide UL rated 40-gallon electric hot water heater to supply hot water for the decontamination unit shower. Activate from 30-amp circuit breaker on the electrical subpanel located within the decontamination unit. Provide with relief valve compatible with water heater operation, relief valve down to drip pan on floor with type L copper. Wiring of the hot water heater shall follow NEMA, NEC, and UL standards.

H. The Abatement Contractor shall provide identification warning signs at power outlets, which are other than 110-120-volt power. Provide polarized outlets for plug-in type outlets, to prevent insertion of 110-120 plugs into higher voltage outlets. Dry transformers shall be provided where required to provide voltages necessary for work operations. All outlets or power supplies shall be protected by ground fault circuit interrupter (GFCI) at the power source.

I. The Abatement Contractor shall use only grounded extension cords; use "hard-service" cords where exposed to abrasion and traffic. Use single lengths or use waterproof connectors to connect separate lengths of electric cords if single lengths will not reach areas of work.

J. The Abatement Contractor shall provide general service incandescent lamps of wattage indicated or required for adequate illumination; Protect lamps with guard cages or tempered glass enclosures; Provide exterior fixtures where fixtures are exposed to moisture.

K. The Abatement Contractor shall provide temporary heat or air conditioning as necessary to maintain comfortable working temperatures inside and immediately outside the work areas. Heating and A/C equipment shall have been tested and labeled by UL, FM or another recognized trade association related to the fuel being used. Fuel burning heaters shall not be used inside containment areas. The Contractor shall also provide a comfortable working environment for occupied areas that are impacted by the asbestos removal.

L. The Abatement Contractor shall comply with recommendations of the NFPA standard in regard to the use and application of fire extinguishers. Locate fire extinguishers where they are most convenient and effective for their intended purpose but provide not less than one extinguisher in each work area, equipment room, clean room and outside the work area.

1.08 REMOVAL OF FIXTURES

A. In locations where the Abatement Contractor is directed to dispose of fixtures, he shall either decontaminate the fixtures and dispose of them as non-asbestos containing materials or he shall place them in an appropriate container and dispose of them as asbestos containing material.

B. In locations where the Abatement Contractor is directed to remove and reinstall fixtures, the fixtures shall be removed, decontaminated, labeled, protected with plastic and stored by the contractor in a location as directed by the Owner.

C. Upon completion of the asbestos removal and upon receiving satisfactory clearance air monitoring results, all items to be replaced shall be restored to their original location and reinstalled by the Abatement Contractor.

PART 2 – PRODUCTS

2.01 MATERIALS AND EQUIPMENT

A. GENERAL REQUIREMENTS

1. Materials shall be stored off the ground, away from wet or damp surfaces and under protective cover to prevent damage or contamination.

2. Damaged or deteriorating materials shall not be used and shall be removed from the premises.

3. Power tools used to drill, cut into, or otherwise disturb asbestos material shall be equipped with HEPA filtered local exhaust ventilation.

4. The Abatement Contractor shall make available to authorized visitors, ladders and/or scaffolds of sufficient dimension and quantity so that all work surfaces can be easily and safely reached for inspection. Scaffold joints and ends shall be sealed with tape to prevent incursion of asbestos. Scaffolds and ladders shall comply with all applicable codes.

B. PLASTIC BARRIERS (POLYETHYLENE)

1. In sizes and shapes to minimize the number of joints.

   a. Six mil. (.006") fire-retardant for vertical protection (walls, entrances and openings).

   b. Six mil. (.006") fire-retardant for horizontal protection (fixed equipment) and heating grilles.

   c. Six mil. (.006") reinforced fire-retardant for floors of decon units.

2. Provide two (2) layers over all roof, wall and ceiling openings. Floor penetrations shall be sealed with a rigid material prior to plasticizing to prevent tripping and fall hazards. All seams within a layer shall be separated by a minimum distance of six feet and sealed airtight. All seams between layers shall be staggered.

3. Barrier Attachment - Commercially available duct tape (fabric or paper) and spray-on adhesive. Duct tape shall be capable of sealing joints of adjacent sheets of plastic, facilitating attachment of plastic sheets to finished or unfinished surfaces of dissimilar materials and adhering under both dry and wet conditions.

C. SIGNS

1. Danger signs shall be provided and shall conform to 29 CFR 1926.1101 and be 14" x 20". These signs shall bear the following information:

DANGER
ASBESTOS
CANCER AND LUNG DISEASE HAZARD
RESPIRATORS AND PROTECTIVE
CLOTHING
ARE REQUIRED IN THIS AREA

D. DANGER LABELS AND TAPE

1. Labels shall be affixed to any asbestos contaminated material in accordance with the requirements of 29 CFR 1910.1200 (f) of OSHA's Hazard Communication Standard, and shall contain the following information:

DANGER
CONTAINS ASBESTOS FIBERS
AVOID BREATHING DUST
CANCER AND LUNG DISEASE HAZARD

2. A label shall be affixed on each container of asbestos waste in accordance with the requirements of 49 CFR Parts 171 and 172, Hazardous Substances; Final Rule (U.S. Department of Transportation), and shall contain the following information:

RQ HAZARDOUS SUBSTANCE
SOLID, NOS, ORM-E, NA 9188
(ASBESTOS)

3. A label shall be affixed on each container of asbestos waste in accordance with the requirements of 40 CFR Part 61.150, NESHAP; Asbestos; Final Rule (USEPA) and shall contain the name of the waste generator and the location at which the waste was generated.
   NOTE: All containers marked as above (1,2 and 3) shall be disposed of as asbestos waste.

4. Provide 3" red barrier tape printed with black lettered "DANGER ASBESTOS REMOVAL". Locate barrier tape across all corridors, entrances and access routes to asbestos work area.

E. PROTECTIVE EQUIPMENT

1. Respiratory Requirements

   a. Where fiber levels permit, and in compliance with regulatory requirements, Powered Air Purifying Respirators are the minimum allowable respiratory protection permitted to be utilized during removal operations.

   b. Where not in violation of NIOSH, OSHA, and any other regulatory requirements, the Abatement Contractor shall provide the following minimum respiratory protection to the maximum use concentrations indicated:

MSHA/NIOSH Approved Respiratory Protection	Maximum Use Concentration
Half-Mask Air Purifying with HEPA Filters	10x PEL
Full-Facepiece Air Purifying HEPA Filters and Quantitative Fit Test	10x PEL
Powered Air Purifying (PAPR), Loose fitting Helmet or Hood, HEPA Filter	25x PEL
Powered Air Purifying (PAPR), Full Facepiece, HEPA Filter	50x PEL
Supplied Air, Continuous Flow Loose fitting Helmet or Hood	25x PEL

Supplied Air, Continuous Flow Full Facepiece, HEPA Filter	50x PEL
Full Facepiece-Supplied Air Pressure Demand, HEPA Filter	100x PEL
Full Facepiece-Supplied Air Pressure Demand, with Aux. SCBA, Pressure Demand or Continuous Flow	>100x PEL

2. Disposable Clothing -"Tyvek" manufactured by Dupont or approved equal.

3. NIOSH approved safety goggles to protect eyes.

4. Polyethylene bags, 6 mil. (.006") thick (use double bags).

NOTE: Workers must always wear disposable coveralls and respirator masks while in the work area. Contaminated coveralls or equipment must be left in work area and not worn into other parts of the building.

F. TOOLS AND EQUIPMENT

1. Airless Sprayer - An airless sprayer, suitable for application of encapsulating material, shall be used.

2. Scaffolding - Scaffolding, as required to accomplish the specified work, shall meet all applicable safety regulations.

3. Transportation Equipment - Transportation equipment, as required, shall be suitable for loading, temporary storage, transport and unloading of contaminated waste without exposure to persons or property. Watertight, hard wall containers shall be provided to retain and dispose of any asbestos waste material with sharp-edged components that may tear plastic bags or sheeting. The containers shall be marked with danger labels.

4. Surfactant - Wetting Agents - "Asbestos-Wet" - Aquatrols Corp. of America or approved equal and shall be non-carcinogenic.

5. Portable (negative air pressure) asbestos filtration system - by Micro-Trap or approved equal.

6. Vacuum, HEPA type equal to "Nilfisk" #GA73, or "Pullman/Holt" #75 ASA.

7. Amended Water Sprayer - The water sprayer shall be an airless or other low-pressure sprayer for amended water application.

8. Other Tools and Equipment - The Abatement Contractor shall provide other suitable tools for the stripping, removal, encapsulation, and disposal activities including but not limited to: hand-held scrapers, nylon brushes, sponges, rounded edge shovels, brooms, and carts.

PART 3 – EXECUTION

3.01 PRE-ABATEMENT WORK AREA PREPARATION

A. The work area shall be vacated by the occupants prior to work area preparation and not reoccupied until satisfactory clearance air monitoring results have been achieved.

B. Caution signs shall be posted at all locations and approaches to a location where airborne concentrations of asbestos may exceed ambient background levels. Signs shall be posted that permit a person to read the sign and take the necessary protective measures to avoid exposure.

C. Shut down and lock out electric power to all work areas. The Abatement Contractor shall provide temporary power and lighting and ensure safe installation of temporary power sources and equipment used where high humidity and/or water shall be sprayed in accordance with all applicable codes. All power to work areas shall be brought in from outside the area through a ground-fault interrupter at the source.

D. Isolate the work area HVAC system.

E. The personnel decontamination enclosure system shall be installed or constructed prior to preparatory work in the work area and in particular before the disturbance of asbestos material. The waste decontamination enclosure system shall be installed or constructed prior to commencement of abatement activities.

F. Movable objects within the work area shall be pre-cleaned using HEPA filtered vacuum equipment and/or wet cleaning and such objects shall be removed from the work area to an uncontaminated location. If disposed of as asbestos waste material, cleaning is not required.

G. Fixed objects and other items, which are to remain within the work area, shall be pre-cleaned using HEPA filtered vacuum equipment and/or wet cleaning. Such objects shall be enclosed with two layers of at least six mil plastic sheeting and sealed with tape.

H. The work area shall be pre-cleaned using HEPA filtered vacuum equipment and/or wet cleaning. Methods that raise dust, such as dry sweeping or vacuuming with equipment not equipped with HEPA filters, shall be prohibited. Asbestos material shall not be disturbed during pre-cleaning.

I. Isolation barriers that seal off all openings, including windows, corridors, doorways, ducts, and any other penetrations of the work area, shall be constructed using two layers of at least six mil fire-retardant plastic sheeting sealed with tape. Also, all seams in mechanical system components that pass through the work area shall be sealed. Doorways and corridors, which shall not be used for passage during work, shall also be sealed.

J. Removal of mounted objects. After isolation barriers are in place, objects such as light fixtures, electrical track, alarm systems, ventilation equipment and other items not previously sealed, shall be double sealed with six mil fire-retardant plastic sheeting. Localized HEPA filtered vacuum equipment shall be used during fixture removal to reduce asbestos dispersal.

K. Individual roof and floor drains shall be sealed watertight using two layers of 6-mil fire-retardant plastic sheeting and tape prior to plasticizing. Openings in floor shall be fully covered with plywood sheeting secured to the floor in such a way as to minimize a tripping hazard prior to plasticizing.

L. Emergency and fire exits from the work area shall be maintained or alternate exits shall be established according to all applicable codes.

M. Adequate toilet facilities shall be supplied by the Abatement Contractor and shall be located either in the clean area of the personnel decontamination enclosure or shall be readily accessible to the personnel decontamination enclosure.

3.02 LARGE ASBESTOS PROJECT PERSONNEL DECONTAMINATION ENCLOSURE SYSTEM (ICR 56-7.5)

A. The personnel decontamination enclosure shall be constructed prior to preparatory work in the work area and in particular before the disturbance of asbestos material.

1. Construction and use of personnel decontamination enclosure systems shall be in accordance with ICR-56 and any Applicable or Site-Specific Variances utilized on this project. Such systems may consist of existing rooms outside of the work area, if the layout is appropriate, that can be enclosed is plastic sheeting and are accessible from the work area. When this situation does not exist, enclosure systems may be constructed out of metal, wood or plastic support.

2. The personnel decontamination enclosure system shall consist of a clean room, a shower room, and an equipment room, in series, separated from each other and from the work area by three airlocks.

3. There shall be one shower per six full shift abatement persons calculated on the basis of the largest shift.

4. The personnel decontamination enclosure system shall be fully framed, sheathed for safety and constructed to prevent unauthorized entry.

5. Personnel decontamination enclosure systems constructed at the work site shall utilize at least six mil fire-retardant opaque plastic sheeting. At least two layers of six mil fire-retardant reinforced plastic sheeting shall be used for the flooring of this area.

6. All prefabricated decontamination units shall be completely decontaminated and sealed prior to separation and removal from the work area. Mobile decontamination units shall remain in place until satisfactory clearance results have been attained.

7. The clean room shall be sized to accommodate all authorized persons. Benches, lockers and hooks shall be provided for street clothes. Shelves for storing respirators shall also be provided. Clean clothing, replacement filters for respirators, towels and other necessary items shall be provided. The clean room shall not be used for the storage of tools, equipment or materials. It shall not be used for office space. A lockable door shall be provided to permit access to the clean room from outside the work area or enclosure. It shall be used to secure the work area and decontamination enclosure during off-shift hours.

8. The shower room shall contain one or more showers. Each shower head shall be supplied with hot and cold water adjustable at the tap. The shower enclosure shall be constructed to ensure against leakage of any kind. Uncontaminated soap, shampoo and towels shall be available at all times. Shower water shall be drained, collected and filtered through a system with at least 5.0 micron particle size collection capability. A system containing a series of several filters with progressively smaller pore sizes shall be used to avoid rapid clogging of the filtration system by large particles. Filtered wastewater shall be discharged in accordance with applicable codes. Contaminated filters shall be disposed of as asbestos waste. The shower room shall be constructed in such way that travel through the decontamination unit shall be through the shower.

9. The equipment room shall be used for the storage of equipment and tools after decontamination using a HEPA filtered vacuum and/or wet cleaning. A one day supply of replacement filters, in sealed containers, for HEPA vacuums and negative pressure ventilation equipment, extra tools, containers of surfactant and other materials and equipment that may be required during the abatement project may also be stored here. A walk-off pan filled with water shall be located in the work area just outside the equipment room for persons to clean foot covering when leaving the work area. A drum lined with a labeled, at least six mil plastic bag is required for collection of clothing and shall be located in this room. Contaminated footwear and work clothes shall be stored in this area.

3.03 WASTE DECONTAMINATION ENCLOSURE SYSTEM (ICR 56-7.5)

A. General Requirements

1. A waste decontamination enclosure system shall consist of the following:

   a. A washroom/cleanup room shall be constructed with an airlock doorway to the work area and another airlock doorway to the holding area.

   b. The holding area shall be constructed with an airlock doorway to the washroom/cleanup room and another lockable door to the outside.

2. Where there is only one egress from the work area, the holding area of the waste decontamination enclosure system may branch off from the equipment decontamination room, which doubles as a waste washroom, of the personnel decontamination enclosure.

3. The waste washroom shall be equipped with a drain installed to collect water and deliver it to the shower drain where it shall be filtered through a system with at least 5.0 micron particle size collection capability. A system containing a series of several filters with progressively smaller pore sizes shall be used to avoid rapid clogging of the filtration system by large particles. Filtered wastewater shall be discharged in accordance with applicable codes. Contaminated filters shall be disposed of as asbestos waste.

4. The waste washroom shall be constructed in such a way that travel through the rooms shall be through the waste washroom

3.04 WORK AREA ENTRY AND EXIT PROCEDURES

A. The following procedures shall be followed throughout the asbestos abatement project until satisfactory clearance air monitoring results have been achieved:

1. All persons shall enter and exit the work area through the personnel decontamination enclosure system.

2. All persons who enter the work area or an enclosure shall sign the entry/exit log, located in the clean room, upon every entry and exit.

3. All persons, before entering the work area, or an enclosure shall read and be familiar with all posted regulations, personal protection requirements, including work area entry and exit procedures, and emergency procedures. The entry/exit log headings shall indicate, and the signatures shall be used to acknowledge, that these have been reviewed and understood by all persons prior to entry.

4. All persons shall proceed first to the clean room, remove all street clothing, store these items in clean sealable plastic bags or lockers and don coveralls, head covering, foot covering and gloves. All persons shall also don NIOSH approved respiratory protection. Clean respirators and protective clothing shall be utilized, by each person, for each separate entry into the work area. Respirators shall be inspected prior to each use and tested for proper seal using quantitative or qualitative fit checks.

5. Persons wearing designated personal protective equipment shall proceed from the clean room through the shower room to the equipment room, where necessary tools are collected and any additional clothing shall be donned, before entry into the work area.

6. Before leaving the work area, all persons shall remove gross contamination from the outside of respirators and protective clothing by brushing, wet cleaning, and/or HEPA vacuuming.

7. Persons shall proceed to the equipment room where all coveralls, head covering, foot covering and gloves shall be removed. Disposable clothing shall be deposited into labeled containers for disposal. Reusable contaminated clothing, footwear, head gear and gloves shall be stored in the equipment room when not being used in the work area.

8. Still wearing respirators, persons shall proceed to the shower area, clean the outside of the respirator and the exposed face area under running water prior to removal of the respirator, and then fully and vigorously shower and shampoo to remove residual asbestos contamination. Respirators shall be washed thoroughly with soap and water. Some types of respirators will require slight modification of these procedures. An airline respirator with HEPA filtered disconnect protection shall be disconnected in the equipment room and worn into the shower. A powered air-purifying respirator facepiece shall be disconnected from the filter/power pack assembly prior to entering the shower.

9. After showering and drying, all persons shall proceed to the clean room and don clean personal protective equipment if returning to the work area or street clothing if exiting the enclosure.

3.05 EQUIPMENT AND WASTE CONTAINER DECONTAMINATION & REMOVAL PROCEDURES

A. The following procedures shall be followed throughout the asbestos abatement project until satisfactory clearance air monitoring results have been achieved.

1. External surfaces of contaminated containers and equipment shall be cleaned by wet cleaning and/or HEPA vacuuming in the work area before moving such items into the waste decontamination enclosure system airlock by persons assigned to this duty. These work area persons shall not enter the airlock.

2. These contaminated items shall be removed from the airlock by persons stationed in the washroom during waste removal operations. These washroom persons shall remove gross contamination from the exterior of their respirators and protective clothing by brushing, HEPA vacuuming and/or wet cleaning.

3. Once in the waste decontamination enclosure system, external surfaces of contaminated containers and equipment shall be cleaned a second time by wet cleaning.

4. The cleaned containers of asbestos material and equipment are to be dried of any excessive pooled or beaded liquid, placed in uncontaminated plastic bags or sheeting and sealed airtight.

5. The clean recontainerized items shall be moved into the airlock that leads to the holding area. The washroom persons shall not enter this airlock or the work area until waste removal is finished for that period.

6. Containers and equipment shall be moved from the airlock and into the holding area by persons dressed in clean personal protective equipment, who have entered from uncontaminated areas.

7. The cleaned containers of asbestos material and equipment shall be placed in water tight carts with doors or tops that shall be closed and secured. These carts shall be held in the holding area pending removal. The carts shall be wet cleaned and/or HEPA vacuumed at least once each day.

8. The exit from the decontamination enclosure system shall be secured to prevent unauthorized entry.

9. Where the waste removal enclosure is part of the personnel decontamination enclosure, waste removal shall not occur during shift changes or when otherwise occupied. Precautions shall be taken to prevent short circuiting and cycling of air outward through the shower and clean room.

10. Containers labeled with Asbestos hazard warnings shall not be used to dispose of non asbestos waste.

3.06 ENGINEERING CONTROLS

A. Ventilation.

1. The Abatement Contractor shall employ HEPA equipped vacuums or negative air pressure equipment for ventilation as required.

2. All negative air pressure equipment ventilation units shall be equipped with HEPA filtration. The Contractor shall provide a manufacturer's test certificate for each unit documenting the capability of trapping and retaining 99.97 percent of asbestos fibers greater than 0.3 microns equivalent aerodynamic diameter.

3. A power supply shall be available to satisfy the requirements of the total of all ventilating units.

4. On electric power failure, abatement shall stop immediately and shall not resume until power is restored and exhaust units are operating fully. On extended power failure, longer than one hour, the decontamination facilities, after the evacuation of all persons from the work area, shall be sealed airtight.

5. If extending the exhaust of the ventilation units 50 feet from the building would result in an exhaust location either in the road, blocking driveway access to the facility or within 50 feet of other buildings, a second unit will be run in series with the primary unit.

3.07 MAINTENANCE OF DECONTAMINATION ENCLOSURE SYSTEMS AND WORK AREA BARRIERS

A. GENERAL REQUIREMENTS

1. The Consultant must review and approve installation before commencement of work. Upon completion of the construction of all plastic barriers and decontamination system enclosures and prior to beginning actual abatement activities.

2. All plastic barriers inside the work area, in the personnel decontamination enclosure system, in the waste decontamination enclosure system and at partitions constructed to isolate the work area from occupied areas, shall be inspected by the asbestos supervisor at least twice daily. The barriers shall be inspected before the start of and following the completion of the day's abatement activities. Inspections and observations shall be documented in the project log.

3. Damage and defects in the barriers and/or enclosure systems shall be repaired immediately upon discovery and prior to resumption of abatement activities.

4. At any time during the abatement activities, if visible emissions are observed outside of the work area of if damage occurs to the barriers, work shall be stopped, repairs made and visible residue immediately cleaned up using HEPA vacuuming methods prior to the resumption of abatement activities.

5. The Abatement Contractor shall HEPA vacuum and/or wet clean the waste decontamination enclosure system and the personnel decontamination enclosure system at the end of each day of abatement activities.

3.08 HANDLING AND REMOVAL PROCEDURES

The Abatement Contractor may utilize existing provisions of ICR-56, Applicable Variances or a Site-Specific Variance, approved by the Owner's Consultant, to permit the conduct of this work.

3.09 ABATEMENT PROCEDURES

A. AIR SAMPLING - By Owner

1. Air sampling and analysis shall be conducted according to the requirements of Subpart 56-4 before the start, during and after the completion of the asbestos removal project.

2. In addition to the requirements of Subpart 56-4, air monitoring shall be conducted in accordance with any approved job specific variance(s) or applicable variance utilized.

3. Clearance samples may be analyzed using PCM to maintain compliance with ICR-56.

4. If applicable, clearance samples will be analyzed using TEM to maintain compliance with ICR-56 and 40 CFR 763.90[i].

B. The provisions of the Applicable Variances or a Job Specific Variance shall apply only in those areas where approval has been granted by the NYS DOL and the Contractor has obtained concurrence from the Owner's Consultant. All other applicable provisions of Industrial Code Rule 56-1 through 56-12 shall be complied.

C. A copy of the NYS DOL Job Specific or Applicable Variance, if applicable, shall be conspicuously posted at the work area(s).

D. The Abatement Contractor shall construct a decontamination unit at the work site. The Abatement Contractor shall, as a minimum, comply with the requirements of 29 CFR 1926.1101(j); Hygiene facilities and practices for employees.

3.10 ENCAPSULATION PROCEDURES

The following procedures shall be followed to seal in non-visible residue, after obtaining satisfactory clearance air monitoring results, while conducting lockdown encapsulation on any surfaces which were the subject of removal or other remediation activities:

A. Only encapsulants rated as acceptable or marginally acceptable on the basis of Battelle Columbus Laboratory test procedures and rating requirements developed under the 1978 USEPA contract shall be used for lockdown encapsulation.

B. Sealants considered for use in encapsulation shall first be tested to ensure that the sealant is adequate for its intended use. A section of the work surface shall be evaluated following this initial test application of the sealant to quantitatively determine the sealant's effectiveness in terms of penetrating and locking down the asbestos fibers. The American Society of Testing and Materials (ASTM) Committee E06.21.06E on Encapsulation of Building Materials has developed a guidance document to assist in the selection of an encapsulant.

C. The encapsulant solvent or vehicle shall not contain a volatile hydrocarbon.

D. Encapsulants shall be applied using airless spray equipment.

1. Spraying is to occur at the lowest pressure range possible to minimize fiber release from encapsulant impact at the surface. It shall be applied with a consistent horizontal or vertical motion.

E. Encapsulation shall be utilized as a surface sealant once all asbestos containing materials have been removed in a work area. In no event shall encapsulant be applied to any surface that was the subject of removal or other remediation activities prior to obtaining satisfactory clearance air monitoring.

3.11 CLEANUP PROCEDURES

A. The following cleanup procedures shall be required.

1. Cleanup of accumulations of loose asbestos material shall be performed whenever enough loose asbestos materials have been removed to fill a single leak tight container of the type commensurate with the material properties. In no case shall cleanup be performed less than once prior to the close of each working day. Asbestos material shall be kept wet until cleaned up.

2. Accumulations of dust shall be cleaned off all surfaces on a daily basis using HEPA vacuum cleaning methods.

3. Decontamination enclosures shall be HEPA vacuumed at the end of each shift.

4. Accumulations of asbestos waste material shall be containerized utilizing HEPA vacuums or rubber or plastic dust pans, squeegees or shovels. Metal shovels shall not be used to pick up or move waste.

5. Excessive water accumulation or flooding in the area shall require work to stop until the water is collected and disposed of properly.

B. The following cleanup procedures shall be required after completion of all removal activities.

1. All accumulations of asbestos waste material shall be containerized utilizing HEPA vacuums or rubber or plastic dust pan, squeegees or shovels. Metal shovels shall not be used to pick up or move waste. HEPA vacuums shall be used to clean all surfaces after gross cleanup.

2. Cleaning. All surfaces in the work area shall be HEPA vacuumed. To pick up excess liquid and wet debris, a wet purpose shop vacuum may be used and shall be decontaminated prior to removal from the work area.

3. Windows, doors, HVAC system vents and all other openings shall remain sealed. Decontamination enclosure systems shall remain in place and be utilized.

4. All containerized waste shall be removed from the work area and the holding area.

5. All tools and equipment shall be decontaminated and removed from the work area.

6. A final visual inspection and clearance air monitoring, as per the schedule for air sampling and analysis, shall be conducted.

7. The isolation barriers and decontamination unit shall be removed only after satisfactory clearance air monitoring results have been achieved.

3.12 SAFETY MONITORING – CONSULTANT:

The Consultant will designate an Asbestos Safety Technician (AST) to represent the Owner during the removal program. The AST must be on the job site at all times during abatement work. Absolutely no abatement or preparation work will occur without the presence of the AST.

The AST will conduct four (4) milestone inspections.

1. Pre-commencement inspection shall be conducted as follows:

   a. Notification in writing to the Consultant shall be made by the Abatement Contractor to request a pre-commencement inspection at least 48 hours in advance of the desired date of inspection. This inspection shall be requested prior to beginning preparatory work in another work area.

   b. The AST shall ensure that:

      i. The job site is properly prepared and that all containment measures are in place;

      ii. The designated supervisor shall present to the inspector a valid supervisor's license issued by the New York Department of Labor;

      iii. All workers shall present to the inspector a valid handler's license issued by the New York Department of Labor;

      iv. Measures for the disposal of removed asbestos material are in place and shall conform to the adopted standards;

      v. The Abatement Contractor has a list of emergency telephone numbers at the job site which shall include the monitoring firm employed by the Owner and telephone numbers for fire, police, emergency squad, local hospital and health officer.

   c. If all is in order, the AST shall issue a written notice to proceed in the field. If the job site is not in order, then any needed corrective action must be taken before any work is to commence. Conditional approvals shall not be granted.

Progress inspection shall be conducted as follows:

   a. Primary responsibility for ensuring that the abatement work progresses in accordance with these technical specifications and regulatory requirements rests with the Abatement Contractor. The AST shall continuously be present to observe the progress of work and perform required tests.

b. If the AST observes irregularities at any time, he shall direct such corrective action as may be necessary. If the Abatement Contractor fails to take the corrective action required, or if the Abatement Contractor or any of their employees habitually and/or excessively violate the requirements of any regulation, then the AST shall inform the Owner who shall issue a Stop Work Order to the Abatement Contractor and have the work site secured until all violations are abated.

Clean-up inspections shall be conducted as follows:

a. Notice for clean-up inspection shall be requested by the Abatement Contractor at least 24 hours in advance of the desired date of inspection;

b. The clean-up inspection shall be conducted prior to the removal of any isolation or critical barriers and before final air clearance monitoring;

c. The AST shall ensure that:

i. The work site has been properly cleaned and is free of visible asbestos containing material and debris.

ii. All removed asbestos has been properly placed in a locked secure container outside of the work area.

d. If all is in order, the AST shall issue a written notice of authorization to remove surface barriers from the work area. All isolation barriers shall remain in place until satisfactory clearance air sampling has been completed.

4. Clearance Visual Inspection shall be conducted after the removal of non-critical plastic sheeting. The AST shall insure that:

a. The work area is free of all visible asbestos or suspect asbestos debris and residue.

b. All waste has been properly bagged and removed from the work area.

c. Should clearance visual inspection identify residual debris, as determined by the AST, the Abatement Contractor is responsible for recleaning the area at his own cost and shall bear all costs of reinspection until acceptable levels are achieved.

B. The Abatement Contractor shall be required to receive written approval before proceeding after each milestone inspection.

3.13 PERSONNEL AIR MONITORING – CONTRACTOR (29 CFR 1926.1101)

A. Personnel air monitoring shall be provided to determine both short-term (STEL) and full shift during when abatement activities occur. Personnel sampling shall be performed in each work area in order to accurately determine the concentrations of airborne asbestos to which workers may be exposed.

B. The Abatement Contractor shall have a qualified "Competent Person" (as specified in 29 CFR 1926 OSHA) to conduct personnel air monitoring.

C. The laboratory performing the air sample analysis shall be certified by NYS DOH ELAP and approved by the consultant.

D. Personnel air monitoring test results for OSHA Compliance. Results shall be posted at the work site within 24 hours of testing and copies supplied to the Owner within five (5) days of testing. Abnormalities shall be supplied to the Owner immediately.

3.14 CLEARANCE AIR MONITORING

A. Air samples will be collected in and around the work areas at the completion of abatement activities.

B. Clearance samples may be analyzed using PCM to maintain compliance with ICR-56.

C. If applicable, clearance samples will be analyzed using TEM to maintain compliance with ICR-56 and 40 CFR part 763 “Asbestos-Containing Materials in Schools; Final Rule and Notice” section 763.90.

D. ***RETESTING***
Should clearance air monitoring yield fiber concentrations above the “Clearance” criteria of either 0.01 fibers per CC and/or background levels (PCM) –OR- seventy (70) structures per square millimeter (TEM/AHERA), the Abatement Contractor is responsible for re-cleaning the area at his own cost and shall bear all costs associated with the retesting of the work area(s) including monitoring labor, sampling, analysis, etc. until such levels are achieved.

3.15 RESPIRATORY PROTECTION REQUIREMENT

A. Respiratory protection shall be worn by all individuals inside the work area from the initiation of the asbestos project until all areas have successfully passed clearance air monitoring in accordance with these specifications. The Abatement Contractor shall keep available at all times two PAPR's with new filters and charged batteries for use by authorized visitors.

B. All respiratory protection shall be MSHA/NIOSH approved in accordance with the provisions of 30 CFR Part II. All respiratory protection shall be provided by the Abatement Contractor and used by workers in conjunction with the written respiratory protection program.

C. The Abatement Contractor shall provide respirators that meet the requirements of 29 CFR Parts 1910 and 1926.

1. Full facepiece Type C supplied-air respirators operated in pressure demand mode equipped with an auxiliary self- contained breathing apparatus, operated in pressure demand or continuous flow, shall be worn during gross removal, demolition, renovation and/or other disturbance of ACM whenever airborne fiber concentrations inside the work area are greater than 10.0 f/cc.

2. Full facepiece Type C supplied-air respirators operated in pressure demand mode with HEPA filter disconnect protection shall be work during gross removal, demolition, renovation and/or other disturbance of ACM with an amphibole content and/or whenever airborne fiber concentrations inside the work area are equal to or greater than 0.5 f/cc and less than or equal to 10.0 f/cc.

3. Full facepiece powered air-purifying respirators (PAPR) equipped with HEPA filters shall be worn during the removal, encapsulation, enclosure, repair and/or other disturbance of friable ACM if airborne fiber concentrations inside the work area are less than 0.5 f/cc. A supply of charged replacement batteries, HEPA filters and flow test meter shall be available in the clean room for use with powered air-purifying respirators. HEPA filters shall be changed daily or as flow testing indicates change is necessary. Any Type C supplied-air respirator operated in continuous flow, with HEPA filter disconnect protection, may be substituted for a powered air-purifying respirator.

4. Loose fitting helmets or hoods with powered air-purifying respirators (PAPR) equipped with HEPA filters may be worn during the removal, encapsulation, enclosure, repair and/or other disturbance of friable ACM if airborne fiber concentrations inside the work area are less than 0.25 f/cc. A supply of charged replacement batteries, HEPA filters and flow test meter shall be available in the clean room for use with powered air-purifying respirators. HEPA filters shall be changed daily or as flow testing indicates change is necessary. Any Type C supplied-air respirator operated in continuous flow may be substituted for a powered air- purifying respirator.

5. Half-mask or full-face air-purifying respirators with HEPA filters shall be worn only during the preparation of the work area and final clean up procedures provided airborne fiber concentrations inside the work area are less than 0.1 f/cc.

6. Use of single use dust respirators is prohibited for the above respiratory protection.

D. Workers shall be provided with personally issued and individually marked respirators. Respirators shall not be marked with any equipment that will alter the fit of the respirator in any way. Only waterproof identification markers shall be used.

E. The Abatement Contractor shall ensure that the workers are qualitatively or quantitatively fit tested by an Industrial Hygienist initially and every six months thereafter with the type of respirator he/she will be using.

F. Whenever the respirator design permits, workers shall perform the positive and negative air pressure fit test each time a respirator is worn. Powered air-purifying respirators shall be tested for adequate flow as specified by the manufacturer.

G. No facial hair, which interferes with the face-to-mask sealing surface, shall be permitted to be worn when wearing respiratory protection that requires a mask-to-face seal.

H. Contact lenses shall not be worn in conjunction with respiratory protection.

I. If a worker wears glasses, a spectacle kit to fit their respirator shall be provided by the Abatement Contractor at the Abatement Contractor's expense.

J. Respiratory protection maintenance and decontamination procedures shall meet the following requirement:

1. Respiratory protection shall be inspected and decontaminated on a daily basis in accordance with OSHA 29 CFR 1910.134(b); and

2. HEPA filters for negative pressure respirators shall be changed after each shower; and

3. Respiratory protection shall be the last piece of worker protection equipment to be removed. Workers must wear respirators in the shower when going through decontamination procedures; and

4. Airline respirators with HEPA filtered disconnect shall be disconnected in the equipment room and worn into the shower. Powered air-purifying respirator facepieces shall be worn into the shower. Filtered/power pack assemblies shall be decontaminated in accordance with manufacturers' recommendations; and

5. Respirators shall be stored in a dry place and in such a manner that the facepiece and exhalation valves are not distorted; and

6. Organic solvents shall not be used for washing of respirators.

K. No visitors shall be allowed to enter the contaminated area if they do not have their medical certification and training certificate. Authorized visitors shall be provided with suitable PAPR respirators and instructions on the proper use of respirators whenever entering the work area.

3.16 DISPOSAL OF WASTE

A. APPLICABLE REGULATIONS

1. All asbestos waste shall be stored, transported and disposed of as per, but not limited to, the following Regulations:

a. NYS Code Rule 56

b. U.S. Department of Transportation (DOT)
Hazardous Substances
Title 29, Part 171 and 172 of the code of Federal Regulations
regarding waste collector registration

c. Regulations regarding waste collector registration Title 6, part 364 of the New York State Official Compilation of Codes, Rules and Regulations – 6 NYCRR 364

d. USEPA NESHAPS 40 CRF 61

e. USEPA ASBESTOS WASTE MANAGEMENT GUIDANCE EPA/530-SW-85-007

B. TRANSPORTER OR HAULER - The Abatement Contractor shall bear full responsibility for proper characterization, transportation and disposal of all solid or liquid waste, generated during the project, in a legal manner. The Owner shall approve all transportation and disposal methods.

1. The Abatement Contractor's Transporter (hauler) and disposal site shall be approved by the Owner. The Abatement Contractor shall remove within 48 hours all asbestos waste from the site after completing the clean up.

2. The Transporter must possess and present to the Owner's representative a valid New York State Department of Environmental Conservation Part 364 asbestos hauler's permit to verify license plate and permit numbers. The Owner's representative will verify the authenticity of the hauler's permit with the proper authority.

3. The Abatement Contractor shall give 24 hour notification prior to removing any waste from the site. All waste shall be removed from site only during normal working hours. No waste may be taken from the site without authorization from the Owner's representative.

4. The Abatement Contractor shall have the Transporter give the date and time of arrival at the disposal site.

5. The Transporter with the Abatement Contractor and Owner's consultant shall inspect all material in the transport container prior to taking possession of and signing the Waste Manifest. The Transporter shall not have any off-site transfers or be combined with any other off-site asbestos material.

6. The Transporter must travel directly to the disposal site with no unauthorized stops.

C. WASTE STORAGE CONTAINER

1. During loading and on-site storage, the asbestos waste container shall be labeled with EPA Danger signage:

DANGER
CONTAINS ASBESTOS FIBERS
AVOID CREATING DUST
CANCER AND LUNG DISEASE HAZARD

2. The NYS DEC Hauler's Permit number shall be on both sides and back of the container.

3. The Container will not be permitted to leave the site without the proper signage.

4. A copy of the completed waste manifest shall be forwarded directly to the Owner's Consultant by the disposal facility.

5. Packaging of Non-friable Asbestos. Use of an open top container shall require written request, by the Contractor, and written approval by the Owners Representative, and be performed in compliance with all applicable regulations.

   a) A chute, if used, shall be air/dust tight along its lateral perimeter and at the terminal connection to the dumpster at ground level (solid wall and top container). The upper end of the chute shall be furnished with a hinged lid, to be closed when the chute is not being used.

   b) The container shall be lined with a minimum of two (2) layers of 6 mil. Fire-retardant polyethylene draped loosely over the sides so as to facilitate being wrapped over the top of the load and sealed prior to transport from the site.

   c) Prior to transport from the work site the Dumpster will be disconnected from the chute and sealed air/dust tight utilizing six mil plastic and tape. The waste material will be transported as an asbestos containing material by appropriate legal methods.

6. Packaging Friable Asbestos.

   a) The container shall be a solid wall, hard top and lockable container.

   b) The container shall be locked upon arrival at the site to restrict access. Security shall be provided at the entrance to the container during the loading process and immediately locked upon completion.

   c) The interior walls, floor and ceiling shall be lined with two (2) layers of 6 mil. Fire-retardant polyethylene.

   d) The waste shall be loaded in such a manner as to protect the integrity of the individual waste packages.

   e) Prior to transport from the work site the interior of the Dumpster will sealed air/dust tight utilizing six mil plastic and tape. The waste material will be transported as an asbestos containing material by appropriate legal methods.

D. WASTE DISPOSAL MANIFEST

1. The Asbestos Waste Manifest shall be equivalent to the “Waste Shipment Record” included in 40 CFR 61. A copy of the Contractor’s manifest shall be reviewed by the Owner’s Consultant and shall be the only manifest used.

2. The Manifest shall be verified by the Owner’s Consultant indicating that all the information and amounts are accurate and the proper signatures are in place.

3. The Manifest shall have the signatures of the Abatement Contractor and the Transporter prior to any waste being removed from the site.

4. The Manifest shall be signed by the Disposal Facility owner or operator to certify receipt of asbestos containing materials covered by the manifest.

5. A copy of the completed manifest shall be provided by the Abatement Contractor to the Owner's Consultant and remain on site for inspection.

6. Abatement Contractor shall maintain a waste disposal log which indicates load number, date and time left site, container size, type of waste, quantity of waste, name of hauler, NYS DES permit number, trailer and tractor license number, and date manifest was returned to Consultant.

7. The Disposal Facility owner or operator shall return a signed copy of the Waste Manifest directly to:

Town of New Windsor
555 Union Avenue
New Windsor, NY 12553
ATTN: Michael Weeks – Town Engineer

8. Copies of the completed Waste Manifest are to be sent by the disposal facility to the Hauler and Abatement Contractor.

9. Submit signed dump tickets and manifests with final payment request.

10. Final payment request will not be honored without signed dump ticket or manifests accounting for all asbestos waste removed from the site.

E. VIOLATIONS OF SPECIFICATIONS

1. Violations of the safety, hygiene, environmental, procedures herein, any applicable federal, state of local requirement s or failure to cooperate with the Owner's representative shall be grounds for dismissal and/or termination of this contract.

3.17 LOCATION OF "ABATEMENT WORK"

(Please see attached Drawings for approximate locations)

1) <u>CAESARS LANE WWTP DEWATERING BUILDING (INTERIOR ABATEMENT)</u>

- Abatement Contractor responsible for total and complete removal and disposal of approximately 4,500 SF of sheetrock with friable asbestos-containing Joint Compound, as detailed on associated abatement drawing(s) and attached project environmental survey report. Abatement Contractor responsible for all demolition required to access material(s), as well as for providing all equipment necessary to access material(s). See below for breakdown:
    - Upper Level, Break Room (500 SF)
    - Upper Level, Men's Bathroom (400 SF)
    - Upper Level, Women's Bathroom (300 SF)
    - Upper Level, Locker Rooms (450 SF)
    - Upper Level, Maintenance Room (350 SF)
    - Upper Level, Entrance Vestibule (750 SF)
    - Upper Level, Control Room (700 SF)
    - Upper Level, Laboratory (450 SF)
    - Upper Level, Reception (600 SF)

Note #1: Abatement contractor responsible for disposal of all porous thermal systems insulation that may be present within wall cavities as asbestos-containing/contaminated materials.

2) <u>CAESARS LANE WWTP DEWATERING BUILDING (EXTERIOR ABATEMENT)</u>

- Abatement Contractor responsible for total and complete removal and disposal of approximately 60 LF of non-friable asbestos-containing caulk from the main entrance door/window system, as detailed on associated abatement drawings. Abatement Contractor responsible for all demolition required to access material(s), as well as for providing all equipment necessary to access material(s). Temporary security and environmental protection throughout the remaining openings shall be provided by the abatement contractor.
    - Main Entrance, Door & Window System Frame (60 LF)

3) <u>CAESARS LANE WWTP UNDERGROUND SITE WORK (EXTERIOR ABATEMENT)</u>

- Abatement Contractor responsible for removal and disposal of non-friable asbestos-containing transite piping that is known or may exist concealed below grade and will be impacted by the project. Abatement Contractor responsible for all excavation and equipment required to access material(s) facilitate removals.
    - Near Settling Tank #3, Protruding out of the Ground (3 LF Visible, and continues below grade)

Note #1: Excavator operator to have NYSDOL asbestos handler license to perform excavation to access transite piping. Mechanical excavation to be performed down to 6 inches around the pipe. Asbestos handlers perform hand excavation to expose the pipe.
Note #2: Abatement to be performed in compliance with ICR56-11.8 Abandoned Pipe/Duct/Conduit Wrap and Cut Removal, or an appropriately sized negative pressure tent regulated abatement enclosure and all other applicable federal and state regulations.
Note #3: If abatement contractor wants alternative means/methods for removal, they are to include the means/methods in their bid submission for review by the Town of New

Windsor's environmental consultant. If a site-specific variance is required, the Town of New Windsor's consultant will develop the variance and submit it to NYSDOL ESU for review and approval.
Note #5: Coordinate removals with site contractor and design team.
Note #6: If additional underground transite piping is encountered during construction, the procedures outlined within this specification and any means/methods in approved site-specific variance shall be followed.

END OF LOCATION OF WORK

3.18 GENERAL

A. The Abatement Contractor will be responsible for repairing all building components damaged during abatement including, but not limited to: ceiling tiles, ceiling finishes, wall finishes, floor finishes, etc.

B. The Abatement Contractor shall be responsible for all demolition required to access materials identified in scope of work and on associated drawings.

C. Concealed conditions that are exposed and may require additional work shall be brought to the attention of the Owner immediately. The Abatement Contractor shall not abate these areas without a written notice to proceed. Additional asbestos abatement performed prior to the order to proceed will not be acknowledged.

D. The Abatement Contractor shall remove asbestos-containing floor covering to the building substrate beneath; in areas indicted. Subsequent to final air clearance the substrate shall be washed with a neutralizing agent to prepare the substrate to accept new floor covering and eliminate residual odors.

E. Power tools used to drill, cut into or otherwise disturb asbestos containing material shall be equipped with HEPA filtered local exhaust ventilation.

F. The Abatement Contractor shall provide access to GFCI electrical power, required to perform the area air monitoring for this project, within and immediately adjacent to each work area.

G. Unwrapped or unbagged ACM shall be immediately placed in an impermeable waste bag or wrapped in plastic sheeting.

H. Coordinate all removal operations with the Owner.

Asbestos Employee Medical Examination Statement

Certificate of Worker Release
Asbestos Employee Training Statement
CERTIFICATE OF WORKERS'S ACKNOWLEDGEMENT

PROJECT NAME: **Town of New Windsor: Caesars Lane WWTP Expansion Project: Phase 2**

CONTRACTOR'S NAME:_____

WORKING WITH ASBESTOS INVOLVES POTENTIAL EXPOSURE TO AIRBORNE ASBESTOS FIBERS. INHALING ASBESTOS FIBERS HAS BEEN LINKED WITH VARIOUS TYPES OF CANCER AND RESPIRATORY DISEASES. SMOKING CIGARETTES AND INHALATION OF ASBESTOS FIBERS INCREASES THE RISK THAT YOU WILL DEVELOP LUNG CANCER ABOVE THAT OF THE NON-SMOKING PUBLIC.

The Contract for this project requires your employer to 1) supply proper respiratory protection devices and training on their use 2) provide training on safe work practices and on use of the equipment used on the project 3) provide a medical examination meeting the requirements of 29 CFR 1926.1101. Your signature on this certificate, documents that your employer has fulfilled these contractual obligations and you understand the information presented to you.

************DO NOT SIGN THIS FORM UNLESS YOU FULLY UNDERSTAND THIS INFORMATION*********

RESPIRATORY PROTECTION: I have been trained in the proper use and limitations of the type of respiratory protection devices to be used on this project. I have reviewed the written respiratory protection program manual and a copy is available for my use. Respiratory protection equipment has been proved, by the Contractor, at no cost to me.

TRAINING COURSE: I have been trained in the risks and dangers associated with handling asbestos, breathing asbestos dust, proper work procedures, personal protection and engineering controls. I have satisfactorily completed and Asbestos Safety Training Program for New York State and have been issued a New York State Department of Health Certificate of Asbestos Safety Training.

MEDICAL EXAMINATION: I have satisfactorily completed a medical examination within the last 12 months that meets the OSHA requirement for an asbestos worker and included at least 1) medical history 2) pulmonary function 3) medical examination 4) approval to wear respiratory protection devises and may have included an evaluation of a chest x-ray.

Signature:_____Date_____

Printed Name:_____SS#:_____

Witness:_____Date:_____

Town of New Windsor: Caesars Lane WWTP Expansion Project: Phase 2

ESTIMATE OF ACM QUANTITIES

****

EACH ABATEMENT CONTRACTOR SHALL READ AND ACKNOWLEDGE THE FOLLOWING NOTICE. A SIGNED AND DATED COPY OF THIS ACKNOWLEDGMENT SHALL BE SUBMITTED WITH THE ABATEMENT CONTRACTOR'S BID FOR THIS PROJECT. FAILURE TO DO SO MAY, AT THE SOLE DISCRETION OF THE OWNER, RESULT IN THE BID BEING CONSIDERED NON-RESPONSIVE AND RESULT IN DISQUALIFICATION OF THE ABATEMENT CONTRACTOR'S BID ON THIS PROJECT.

****

***** NOTICE *****

The linear and square footages listed within this specification are approximates. Abatement Contractor is required to visit the work locations prior to bid submittal in order to take actual field measurements within each listed location. The Abatement Contractor shall base their bid on actual quantities determined, by them, at the site walkthrough. Estimates provided in these specifications are for informational purposes only and shall not be considered a basis for Change Orders on this project.

****

Acknowledgment: I have read and understand the above **NOTICE** regarding removal quantity estimates and understand that estimates provided in these specifications are for informational purposes only and shall not be considered a basis for Change Orders on this project. The Abatement Contractor's signatory represents to the Owner that he/she has the authority of the entity he/she represents to sign this agreement on its behalf.

Company Name: _____
Type or Print

BY: _____ _____ _____
Signature Title Date

Print Name: _____

THIS PAGE LEFT BLANK INTENTIONALLY

END OF SECTION

EXHIBIT D

Geotechnical Investigation Proposed Improvements To Caesars Lane Waste Water Treatment Plant

Prepared by Tectonic

Tectonic

PRACTICAL SOLUTIONS. EXCEPTIONAL SERVICE.

GEOTECHNICAL INVESTIGATION
PROPOSED IMPROVEMENTS TO
CAESARS LANE WASTE WATER TREATMENT PLANT
TOWN OF NEW WINDSOR, NEW YORK

Submitted To:

Town of New Windsor

222 Union Avenue
New Windsor, NY 12553

W.O. 9928.01

January 15, 2020

Submitted By:

Tectonic Engineering Consultants, Geologists & Land Surveyors, D.P.C.

1279 Route 300, 2nd Floor
Newburgh, NY 12550

(P) 845.567.6656
(F) 845.567.6248

Tectonic
PRACTICAL SOLUTIONS. EXCEPTIONAL SERVICE.

Town of New Windsor
222 Union Avenue
New Windsor, NY 12553

Attention: Debbie Green
(dgreen@newwindsor-ny.gov)

January 15, 2020

RE: W.O. 9928.01
GEOTECHNICAL INVESTIGATION
PROPOSED IMPROVEMENTS TO
CAESARS LANE WASTE WATER TREATMENT PLANT
TOWN OF NEW WINDSOR, NEW YORK

Dear Ms. Green;

Tectonic Engineering Consultants, Geologists & Land Surveyors, D.P.C. is pleased to submit this a geotechnical investigation for the proposed improvements to the Wastewater Treatment Plant for the Town of New Windsor, New York. The purpose of this investigation was to provide a characterization of the subsurface conditions across the proposed area of development and to develop recommendations for the geotechnical aspects of the proposed site development, particularly three proposed tanks and a new control building.

We appreciate this opportunity to assist you with this project. If you have any questions, please do not hesitate to contact the undersigned.

Sincerely,

TECTONIC ENGINEERING CONSULTANTS, GEOLOGISTS & LAND SURVEYORS, D.P.C.

STATE OF NEW YORK
CHRISTOPHER B. BURKE
078832
LICENSED PROFESSIONAL ENGINEER

Christopher Burke, Ph.D., P.E., PMP
Manager of Geotechnical Services

"G:\Newburgh\Geotechnical\9900\9928.01 Caesars Lane Wastewater Treatment Plant\Report\TEC_2018 Cover Letter.docx"

Newburgh Office

1279 Route 300 | Newburgh, NY 12550
845.567.6656 Tel | 845.567.8703 Fax

tectonicengineering.com
Equal Opportunity Employer

GEOTECHNICAL INVESTIGATION
PROPOSED IMPROVEMENTS TO
CAESARS LANE WASTE WATER TREATMENT PLANT
TOWN OF NEW WINDSOR, NEW YORK

TABLE OF CONTENTS

SECTION	ITEM		PAGE
1.0	INTRODUCTION		1
2.0	SCOPE OF SERVICES		1
3.0	SITE AND PROJECT DESCRIPTION		1
4.0	SUBSURFACE INVESTIGATION		2
5.0	LABORATORY TESTING		3
6.0	SUBSURFACE CONDITIONS		3
	6.1	Glacial Till	3
	6.2	Bedrock	4
	6.3	Groundwater	5
7.0	SEISMIC SITE COEFFICIENTS AND LIQUEFACTION POTENTIAL		6
8.0	DISCUSSION & CONCLUSIONS		7
9.0	RECOMMENDATIONS		8
	9.1	Foundations	8
	9.2	Foundation and Tank Walls	9
	9.3	Slabs-on-Grade	10
10.0	CONSTRUCTION RECOMMENDATIONS		11
	10.1	General Site Preparation	12
	10.2	Subgrade Preparations	12
	10.3	Protection of Subgrades and Temporary Dewatering	13
	10.4	Fill and Backfill Materials	14
	10.5	Excavations and Shoring	15
11.0	ADDITIONAL ENGINEERING		16
12.0	CONSTRUCTION MONITORING		17
13.0	LIMITATIONS		17

FIGURE 1 BORING LOCATION PLAN

APPENDIX I BORING LOGS
APPENDIX II LABORATORY TEST RESULTS

1.0 INTRODUCTION

Pursuant to your request and authorization, we have completed a geotechnical investigation for the proposed improvements to the Wastewater Treatment Plant for the Town of New Windsor, New York. The purpose of this investigation was to provide a characterization of the subsurface conditions across the proposed area of development and to provide recommendations for the geotechnical aspects of the proposed site development, particularly three proposed tanks and a new control building.

The following sections summarize the scope of services performed; provide general descriptions of the existing site conditions and proposed construction; and detail the performed investigation. These are followed by a discussion of the findings and conclusions that we have made regarding geotechnical aspects of the design and construction of the proposed project. The report ends with sections containing our final geotechnical recommendations for the proposed site development and construction, recommendations for collection of further subsurface information, and concludes with recommendations for construction-phase engineering monitoring.

2.0 SCOPE OF SERVICES

The following services were performed for the Town of New Windsor, New York, herein referred to as the Client:

- Drilling, sampling, and logging of ten (10) borings dispersed across the site. These test borings were drilled to depths ranging from approximately 11 to 32 feet.
- Field inspection services by a geotechnical engineer and an engineering geologist to document that the investigation conformed to the appropriate ASTM standards, to prepare logs of the encountered subsurface conditions, and modify the subsurface investigation as conditions warranted.
- Laboratory testing of representative soil and bedrock samples to assist in the evaluation of the engineering properties of the encountered soils and to confirm field classifications of soils.
- Compilation of the subsurface data and the performance of a geotechnical engineering evaluation of the data, as they relate to the proposed site development.
- Preparation of this geotechnical report presenting the results of our subsurface investigation, laboratory testing, analyses, and our recommendations for the proposed site improvements.

3.0 SITE AND PROJECT DESCRIPTION

The existing Caesars Lane Wastewater Treatment Plant is located within the Town of New Windsor, New York, between Caesars Lane, on the north, and Moodna Creek, on the south. Wooded parkland lies to the west of the treatment plant and a small stream, followed by various commercial properties, adjoins the east side of the site. The approximately 6-acre site contains about 10 waste water treatment tanks, a control building and various

other structures. The site generally slopes downward from north to south, with elevations ranging from approximately +1 foot near the confluence of the small stream and Moodna Creek, at the southeastern corner of the site, to approximately +40 feet, at the entrance to the site, on Caesars Lane.

It is our understanding that several improvements will be made to the treatment plant to comply to New York State Department of Environmental Conservation requirements. Based on information provided by McGoey, Houser & Edsall (MH&E), the proposed improvements will include construction of three new tanks, a new control building and other associated structures. In particular, the new 40-foot by 80-foot control building will be located near the northeast corner of the site, adjacent to the entrance road. A new 65-foot diameter primary settling tank (number 4) will be located northeast of the existing three settling tanks in the north-central portion of the site. A new 90-foot by 170-foot MBR tank will be located along the western perimeter of the site, between the existing Primary Settling Tanks #2 and Trickling Filter #3. Finally, a new Dechlorination Tank and associated structure, will be located near the southeast corner of the site, immediately south of the existing control building. The Dechlorination Tank is planned to be approximately 49 feet wide, by 88 feet long, while the associated structure will have an approximate footprint of 1,100 square feet and will house various tanks and pumps.

Loading information was not available at the time this report was prepared, however, it is our understanding that the tanks will mostly be located below grade and the proposed control structure will be a single-story structure. Subsequently, all foundation loads are expected to be relatively light.

4.0 SUBSURFACE INVESTIGATION

The subsurface investigation consisted of the performance of ten (10) test borings – designated B-1 through B-10. The borings were performed by Craig Test Boring Company, Inc. between the dates of June 10 and June 12, 2019 using an ATV-mounted drill rig, equipped with automatic hammers. The borings were advanced to depths ranging from 11.33 to 32 feet, using tricone drill bits and mud-rotary drilling techniques in soil and decomposed bedrock, and an NQ double-tube core barrel, equipped with a diamond impregnated bit, in competent bedrock. Four-inch inside-diameter steel casing was typically installed to depths ranging from 10 to 20 feet, to stabilize the near surface soils. Standard Penetration Testing (SPT) and split spoon sampling was typically conducted at 5-foot maximum intervals in soil and decomposed bedrock; however, continuous sampling was performed to depths ranging from 4 to as much as 14 feet, depending upon conditions encountered in the borings.

The borings were drilled near locations selected by MH&E. It is our understanding that at the time that the subsurface investigation, most, if not all, of the proposed structures' locations were not known. Therefore, MH&E elected to distribute the borings across the site, to give general coverage of the site and subsurface conditions.

The test borings were performed under the full-time observation of an engineering geologist or a geotechnical engineer. The inspectors observed that the investigation was performed in accordance with the appropriate ASTM standards and prepared logs of the encountered subsurface conditions. The locations of the borings are shown on the attached Boring Location Plan, Figure 1. Copies of the boring logs are included in Appendix I of this report.

5.0 LABORATORY TESTING

Laboratory testing was conducted on samples selected to assist in identifying soil and bedrock engineering properties and to augment the field identifications of soil samples. The laboratory testing consisted of the following:

Table 5.1 Laboratory Tests

Quantity	Description	ASTM Standard
6	Grain Size Distribution	D6913
4	Point Load Strength Index tests of Rock	D5731

The results of the laboratory tests have been incorporated into the soil descriptions given below and on the boring logs, and are provided in Appendix II of this report.

6.0 SUBSURFACE CONDITIONS

The encountered subsurface conditions generally consist, in turn, of a 3- to 4-inch thick layer of topsoil or gravel surfacing, glacial till soils, and shale or sandstone bedrock. The following subsections provide generalized descriptions of the soil, groundwater and bedrock conditions encountered across the site.

6.1 Glacial Till

Glacial till underlies the topsoil and generally extends to bedrock across the site. It should be noted that, given the level of development on this site, some of the soils encountered within the borings may be re-worked native soils that have been placed as fill. This is particularly the case at boring B-2, where loose

to very loose soils were encountered within the top 10 feet of the soil profile. However, nothing that could clearly distinguish fill (plastics, concrete, et cetera), from the naturally placed glacial till, could be clearly identified, and therefore, no distinction has been made in this report. Existing fill should be expected near existing structures.

The glacial till generally ranges from brown to gray and consists of a wide range of soil particle sizes, with descriptions ranging from silty clay, with 20 to 35 percent coarse to fine sand, and 10 to 20 percent coarse to fine gravel; to coarse to fine gravel, with 10 to 20 percent coarse to fine sand, and 10 to 20 percent silt. Overall, the glacial till has Unified Soil Classification System (USCS) designations of CL, SM, SC, GP and GM, depending on the primary and secondary soil constituents, and the plasticity of the soil. Based on observations of the drilling tools (drill chatter and one split spoon refusal) during the mud-rotary drilling, it is anticipated that the glacial till contains cobbles and boulders. SPT refusals are generally defined as over 50 blows of the hammer resulting in less than 6-inches of sampler penetration.

The field SPT N-values within the glacial till range widely, from as low as 3 blows per foot (bpf) to as high as 102 bpf. Furthermore, the SPT N-values generally, increase with depth; however, isolated pockets of looser soil were encountered in some borings, such as the previously noted in boring B-2, where the average N-value between the depths of 2 and 12 feet was measured to only be 5 bpf, indicating that much of the soil profile at boring B-2 is in a loose condition. Lower N-values within the denser soils are attributed to low sand and gravel contents, and possibly the weathering of the coarse-grained soil particles, or (as previously noted) may be due to poorly compacted fill.

6.2 Bedrock

Drill bit refusal occurred in each of the ten (10) borings, and bedrock was cored in borings B-6 and B-10. Based on the rock cores, rock fragments collected in the deepest split spoon samples and the action of the drill bit, it is anticipated that the drill bit refusals in the other eight (8) borings occurred on bedrock. See Table 6.3.1, below, for the approximate depth and elevation at which bedrock was encountered at each boring.

Shale and sandstone bedrock was observed in the rock cores, with some granite intrusion observed in the core taken from boring B-10. The Austin Glen Formation is mapped to the northwest and southeast of the site. The Austin Glen Formation consists of a mix of shales and graywacke (gray sandstone), which generally matches the observed bedrock.

Where core sampled, the shale and sandstone can be summarized as being moderately to slightly weathered, moderately to highly fractured, and is medium-hard to hard. Fractures within the cores range from 0 to 90 degrees from horizontal. The Rock Quality Designations (RQD) of the cored intervals (the cumulative sum of the length of the core pieces having lengths greater than or equal to 4 inches divided by the length of each core run) ranges from 22 to 43 percent, indicating that the shale and sandstone generally ranges from very poor to poor quality. It should be noted, however, that the quality of the rock does appear to improve with depth.

6.3 Groundwater

Due to the introduction of water during mud-rotary drilling, groundwater depths could not be directly measured in some of the test boring locations during drilling. However, Table 6.3.1 provides our best estimates of the groundwater depths and elevations, as well as bedrock depths and elevations, at the various borings.

It should be noted that groundwater levels will vary with season, weather and other factors, including modifications proposed as part of the proposed development. Consequently, groundwater should be anticipated to be encountered at other depths at other times. Furthermore, because drilling fluids were used during the drilling operation, it is possible that the groundwater depths reported above may be higher than normal.

Table 6.3.1 Bedrock and Groundwater Depths and Elevations

Boring Number	Approximate Location	Surface Elevation (ft)	Bedrock		Groundwater	
			Depth (ft)	Elev. (ft)	Depth (ft)	Elev. (ft)
B-1	Near Southeast Corner of Proposed Control Building	36	11	25	6	30
B-2	West Side of Proposed Primary Settling Tank #4	30.5	16	14.5	4	26.5
B-3	Near the Center of the Site	30.5	22	8.5	15	15.5
B-4	Near Northeast Corner of MRB Tank	29	20.5	8.5	NM	-

B-5	Northeast of Trickling Filter #2	30	20	10	10	20
B-6	Near Southeast Corner of MRB Tank	27	21	6	11.4	15.6
B-7	Within the Proposed Dechlorination Tank	9	12	-3	5	4
B-8	Northeast of Trickling Filter #3	21.5	31.5	-10	13	8.5
B-9	North of Secondary Settling Tank #2	12	20	-8	5	7
B-10	East of Proposed Dechlorination Tank	7.5	15	-7.5	6	1.5

Notes:
1. All measurements are approximate
2. NM indicates Not Measured.
3. See the Boring Location Plan, Figure 1, for the actual boring locations.

7.0 SEISMIC SITE COEFFICIENTS AND LIQUEFACTION POTENTIAL

As part of our investigations, we have evaluated the site conditions to obtain an appropriate site coefficient for use in seismic design. These analyses were based on the subsurface conditions, published correlations between N_{60}-values and the shear wave velocities of various soils, and the criteria outlined in the current edition of the New York State Building Code (Code). The soils and rock underlying the proposed building and tanks should be considered to have a Site Classification of **C**, with maximum spectral response accelerations at short periods (S_{MS}) equal to 0.315g and at a 1-second period (S_{M1}) equal to 0.086g. Based on the procedures outlined in the Code, the corresponding five-percent damped design spectral response acceleration at short periods, S_{DS}, is equal to 0.210g, and at a 1-second period, S_{D1}, is equal to 0.058g, for a Risk Category II structure, in accordance with the Code.

Liquefaction of soils can be caused by strong vibratory motion, such as those caused by earthquakes. Both research and historical data indicate that loose, granular soils saturated by a shallow groundwater table are most susceptible to liquefaction. Liquefaction occurs when an earthquake and associated ground shaking of sufficient duration results in the loss of grain-to-grain contact due to a rapid increase in pore-water pressure, causing the soil to behave as a fluid for short periods.

A procedure recommended by Youd et al (2001) was used in evaluating the liquefaction potential at the site. This method estimates the stresses likely to be induced by an earthquake and the stresses likely to initiate liquefaction using the SPT blow counts, the effective overburden pressure, and the peak horizontal ground acceleration that would be caused by the design seismic event. For this site location, the USGS anticipates an earthquake moment

magnitude of 5.50, a rock surface Peak Horizontal Ground Acceleration (PHGA) of 0.140g, and a PHGA factor of 1.26 (resulting in an analysis PHGA of 0.176g) for a class C site, using their 2014 dynamic model. The factors of safety against liquefaction were computed by the ratio of cyclic shear strength of the soil to the cyclic shear stress induced by the seismic event. The factors of safety against liquefaction were computed by the ratio of cyclic shear strength of the soil to the cyclic shear stress induced by the seismic event. The factor of safety against liquefaction was found to be well above the generally accepted minimum of 1.0, and therefore, it is our conclusion that the soils underlying the site are unlikely to liquefy, if the design earthquake should occur.

8.0 DISCUSSION & CONCLUSIONS

The following bulleted items discuss the geotechnical considerations related to the design and construction of the proposed structures at the wastewater treatment plant. The discussion relies heavily on our understanding of the proposed site development as detailed in Section 3, combined with the subsurface conditions encountered during the subsurface investigations.

- Tank floor elevations have been provided by MH&E for the three proposed tanks (settling tank #4: +13.31 feet, the MBR tank: +11.0 feet, and the dechlorination tank: -1.0 foot). Details of the dechlorination tank (also provided by MH&E) show a concrete tank with a 1-foot thick floor and footings that bear 1.5 feet below the floor slab elevation. Assuming that all of the tanks will have similar designs, the provided information suggests that settling tank #4 will bear at approximately +11.8 feet, the MBR tank will bear at an elevation of approximately +9.5 feet, and the dechlorination tank will bear at -2.5 feet. Comparing these bearing elevations with the approximate bedrock elevations (Table 6.3.1) shows that the tanks are likely to bear upon or slightly above the bedrock. It should be noted, however, that we anticipate that the bedrock elevation somewhat reflects the ground surface elevation and that the bedrock elevation along the uphill sides of each tank may be significantly higher than the elevation measured at the borings, thus the need for possible rock removal to establish the footing subgrade elevations.

- The groundwater elevations, as shown in Table 6.3.1, also show that the tank floors (as well as the footings) will all be located below the groundwater table. Based on the rough groundwater elevations shown in the table, it is anticipated that the tank floors will likely be between 5 feet (at the dechlorination tank) to 13 feet (at settling tank #4) below the groundwater table. It should be noted, however, that the groundwater measurements are approximate, and the borings were often drilled near the downhill sides of the tanks. Subsequently, there is a possibility that the groundwater will be higher near the uphill sides of the tanks. This indicates that either foundation drainage will need to be installed at each of the proposed tanks, and/or the tanks will likely need to be anchored to the underlying rock, to resist buoyant forces acting upon the tanks.

- Laboratory tests indicate that the soils at the site contain between 25 and 60 percent fines (silt and/or clay). Fines contents of this level tend to make the soils difficult to dewater and potentially sensitive to disturbance, when wet. If used as backfill, these soils may be difficult to compact and could produce increased loading upon the tank walls, compared to a select granular fill.

- The soils and bedrock at the site are suitable for providing adequate support for conventional shallow foundations. Subsequently, the tanks and buildings may be designed using continuous wall and isolated column footings.

- The on-site soils are unlikely to liquefy.

- Based on the boring locations selected early during the design phase, only six out of the ten borings were located at or near proposed structures. Furthermore, most of the proposed structures have only one boring in the vicinity of the proposed locations. This limited information has required us to provide conservative recommendations in the following sections and could possibly lead to cost over-runs (or the need for a relatively high contingency) during construction. In particular, we anticipate that higher than anticipated bedrock surface and groundwater elevations may lead to possible cost over-runs. To minimize these potential, additional subsurface investigation will be recommended in Section 11 of this report.

- Monitoring should be performed to document that the construction, specifically rock removal, does not adversely affect the existing structures around the site. Monitoring should include surveying to identify both horizontal and vertical movement of the adjacent buildings. Monitoring should also include measuring vibration levels during construction to document that they are within acceptable limits. Preconstruction surveys should also be performed in the adjacent buildings.

9.0 RECOMMENDATIONS

The following section provides recommendations for the design of the tanks and other structures to be constructed on the site.

9.1 Foundations

The proposed buildings (the new control building and the building associated with the dechlorination tank) can be supported on continuous wall footings and spread footings bearing on undisturbed native soils, or upon fill soils placed as backfill for the dechlorination tank. In all footing subgrades and areas where fill placement is required, the soil subgrades should be prepared and approved; and any fill should be placed and compacted in lifts, as recommended in Section 10 of this report. Foundations bearing on new compacted fill or within the approved native soil should be designed using a net allowable bearing pressure of 4,000 pounds per square foot (psf), or less. Subgrade preparation recommendations are provided in Section 10, below.

The proposed tanks (settling tank #4, the MBR tank and the dechlorination tank) can be supported on continuous wall footings bearing on the poor-quality shale or sandstone bedrock, or upon the very dense native soils, encountered at or below the planned tank floor elevations shown on the site plan (SP-1).

Foundations bearing on dense native soils, or poor-quality shale or sandstone bedrock, should be designed using a net allowable bearing pressure of 8,000 pounds per square foot (psf), or less. Subgrade preparation recommendations are provided in Section 10, below. Please note that some removals of loose soils and subsequent deepening of the tank footings, may be required to obtain the required bearing materials.

We recommend that continuous wall footings be designed with a minimum width of 2 feet and spread footings should have a minimal width of 3 feet. Exterior footings should bear at least 3.5 feet below the adjacent outside grade for frost protection. Interior foundations should bear at least 1.5 feet below the finished floor slab elevation within heated sections of the building. Using the above design criteria, total settlement is estimated to be less than 1.0 inch and differential settlements are estimated to be less than 0.5 inches. The differential settlement is estimated over a distance of about 30 feet along continuous footings, or between adjacent column footings.

9.2 Foundation and Tank Walls

Below grade tank and building walls should be backfilled with non-expansive, free draining soil. However, it is understood that the Client may wish to use the on-site soils, rather than importing soils. Subsequently, Table 9.2.1 provides lateral design parameters for both on-site soils and imported structural fill. See Section 10 for the recommended material requirements for structural fill.

Table 9.2.1 Foundation and Retaining Wall Design Parameters

Soil Parameter	On-Site Soil	Structural Fill
Angle of internal Friction	30˚	35º
Active earth pressure Coefficient (K_a) (1)	0.33	0.27
At rest earth pressure Coefficient (K_o) (2) (restrained wall)	0.50	0.43
Passive earth pressure Coefficient (K_p) (3)	3.00	3.69
Total unit weight of soil (pounds per cubic foot)	135	130

1) Use for free standing walls where movement of up to 0.0025 X height of wall is both possible and tolerable. Otherwise, use at-rest coefficient.

2) Use for walls restrained against outward lateral movement.

3) Passive resistance should be reduced by one half ($^1/_2$) within the zone of frost penetration (3.5 feet).

Concrete foundations cast directly against the native on-site soils or fill can be assumed to have a coefficient of sliding resistance of 0.34. Foundations cast directly upon poor quality shale or sandstone bedrock can be assumed to have a coefficient of sliding resistance of 0.40.

Additional loading due to temporary and permanent surcharges, such as earthquake, automobiles and construction traffic, should be added to the lateral loading exerted by the backfill. Loads due to supported structures should be applied in appropriate combinations with the lateral loads.

9.3 Slabs-on-Grade

Building slab-on-grade floors should be supported on a minimum 6-inch thick layer of free draining ½- to ¾-inch crushed stone placed over undisturbed native soil or native site (general) fill soils. Subgrade preparation recommendations are provided in Section 12 of this report. A vapor barrier consisting of a polyethylene membrane at least 15 mils thick, such as Stego® Wrap Vapor Barrier, should be placed beneath all moisture sensitive floor slabs. A coefficient of friction of 0.3 should be used between the slab and the vapor barrier.

For design of slab-on-grade floors within the buildings, constructed with a 6-inch crushed stone base, a modulus of subgrade reaction of 150 pounds per cubic inch (pci) is recommended. For tank floor slabs, bearing directly upon undisturbed native soils or poor-quality shale or sandstone bedrock (or upon up to 6 inches of crushed stone placed over these materials), a modulus of subgrade reaction of 250 pounds per cubic inch (pci) is recommended. The modulus of subgrade reaction is suitable for estimating distributions of bearing pressure beneath the slab and for estimating bending moments and shears within the slab. It is not intended for the purpose of calculating total or differential settlements.

All tank floors and building floor slabs that are to be constructed more than 4 feet below existing grade should incorporate a subsurface drainage system that discharges under gravity flow to a suitable outlet. The under-slab drainage system should consist of 4-inch diameter corrugated HDPE or PVC perforated pipe surrounded by ½- to ¾-inch crushed stone, installed in trenches that extend at least 12 inches below the bottom of the slab subgrade elevation, pitching to a positive outlet. The trenches should be constructed with a maximum spacing of 20 feet. In these cases, both the trenches and crushed stone base for the slabs should be separated from the underlying native soils by a non-woven material with an apparent opening size equal to the #100 US sieve, such as Tencate's Mirafi 1100N. In no circumstance

should pipe that comes pre-wrapped in filter fabric be allowed. Detailed recommendations related to subsurface drainage systems can be provide once the final locations of the structures are known.

If drainage cannot be installed beneath tank floors, the floors should be anchored to the underlying bedrock to resist buoyant forces when the tanks are empty. The following table provides recommended design groundwater and bedrock elevations that should be used in designing anchors for each of the proposed tanks:

Table 9.3.1 Recommended Design Groundwater and Bedrock Elevations

Tank	Groundwater Elevation (ft)	Bedrock Elevation (ft)
Settling Tank #4	+30	+12
MRB Tank	+22	+5
Dechlorination Tank	+8	-5

Note:
1. Design groundwater elevations are based on conservative estimates of the high groundwater elevation at the uphill side or corner of each tank.
2. Design bedrock elevations are based on conservative estimates of the low bedrock elevation at the downhill side or corner of each tank.

It is anticipated that a design to resist the buoyant uplift forces will require the use of prestressed rock anchors. If anchors are necessary, they should consist of either self-drilling bar anchors, or strand anchors installed into pre-drilled holes. The anchors should have a minimum drilled diameter of 4 inches and a free length of 10 feet for bar anchors, or 15 feet for strand anchors. The anchors should have a minimum bonded length of 5 feet and be designed using an allowable bond strength of 100 pounds per square inch (psi). It is also recommended that a grout with an unconfined compressive strength of at least 5,000 psi be specified. Anchors should be designed and constructed in accordance with the latest edition of "Recommendations for Prestressed Rock and Soil Anchors" by the Post-Tensioning Institute. The actual capacity of the anchors should be verified in accordance with the test procedures described in the same publication.

10.0 CONSTRUCTION RECOMMENDATIONS

The following sections provide our general site and building construction recommendations.

10.1 General Site Preparation

Topsoil, stumps, roots greater than 1-inch in diameter, existing structure foundations, underground utilities, and other deleterious materials should be stripped and grubbed from the site of each proposed structure. Topsoil removed from the stripping operation may be stockpiled and processed (if necessary) to meet the civil engineer's and/or landscape architect's specifications for topsoil to be placed around the site. All debris and unsuitable materials removed from the site should be disposed of at a legal disposal facility. Existing utilities within the project limits, if any, should be re-routed or protected from damage by construction equipment.

It is anticipated that the fill soil used for this project may be excavated from the proposed tank locations. The on-site soils are sensitive to disturbance and will be difficult to compact when wet, because of their relatively high fines-contents. Delays associated with stabilization of the soils should be expected when they are placed in wet conditions, such as during wet periods or when excavated from below the groundwater table. If the Client wishes to minimize delays, it would be prudent to limit performing earthwork to the summer months. Overly wet fill should be dried to meet the recommendations given below. This may be achieved by air drying, with or without mechanical manipulation. Imported structural fill should be used for backfilling retaining walls and foundation walls, if the Client does not wish to attempt using the on-site soils. See Section 10.4 for further details and recommendations for fill materials.

10.2 Subgrade Preparations

All foundation and slab subgrades should be inspected by the geotechnical engineer prior to the placement of concrete or fill. The subgrades should consist of firm, stable and unyielding native soils or bedrock.

Foundation subgrades should be prepared by removing all soil loosened by machine excavation. The foundation subgrades, tank floor subgrades and building slab-on-grade subgrades should be proofrolled under the observation of the geotechnical engineer, except those that consist of sound bedrock. Proofrolling in confined areas should be performed with a double-drum vibratory roller having a minimum static weight of 1.5 tons. Proofrolling in open areas should be performed with a static roller having a minimum weight of 10 tons, or by a fully-loaded 10-wheeled dump truck. Bedrock subgrades should be inspected by the geotechnical engineer to verify that weak zones of soil do not exist within the rock.

Soils not meeting the recommended requirements for suitable bearing materials or areas found to be soft and yielding during proofrolling, should be removed. The area of removal should be within the zone of influence of the foundation, which is defined as a zone contained within imaginary planes sloping downward and outward from the bottom edges of the foundation at a slope of 1 horizontal to 1 vertical. When unsuitable material is encountered beneath slabs or tank floors, the area of removal should span the entire soft, yielding area beneath the slab or floor. Over-excavated areas beneath building foundations or slab-on-grade floors should be re-established with compacted fill, while over-excavated areas beneath tank foundations or floors should be re-established with flowable fill.

10.3 Protection of Subgrades and Temporary Dewatering

Subgrades should be protected from the effects of frost, construction traffic, groundwater, and surface water. The necessary temporary protection should be provided immediately subsequent to excavation and be maintained until placing fill or concrete. Temporary surface drainage measures are recommended to divert runoff away from the proposed construction limits. Permanent drainage measures – typically footing drains and slab underdrains – are recommended within cut areas that extend more than 4 feet below existing grade.

Dewatering should be performed to maintain groundwater approximately 2 feet below the deepest excavation. Temporary dewatering can be best achieved through the use of use of sump pits and pumps installed adjacent to building foundations. Sump pits should be placed outside of the zone of influence of foundations, with the surrounding subgrade sloped to direct groundwater to the pits. Four (4) to six (6) inches of clean crushed stone, as recommended below, may be placed above the excavated subgrades for protection during foundation construction.

Based on shallow groundwater being observed across the site, it is expected that groundwater will be encountered when excavating to construct the various tanks. However, given the relatively high fines-contents of the on-site soils, it is anticipated that the groundwater flow will be relatively slow and that temporary curtain drains, installed several feet beyond the uphill sides of the tanks may be able to control most of the seepage. Each curtain drain should consist of a trench at least 2 feet wide, excavated a minimum of 2 feet below the planned tank footing elevation and at least 3 feet from the exterior edge of the tank footing. The curtain drains should be constructed using crushed stone surrounding perforated 4-inch corrugated HDPE or PVC pipe placed at the bottom of the trench. The crushed stone should

extend to the ground surface within the tank excavation and should be surrounded by a non-woven filter fabric with an apparent opening size equal to the #100 US Sieve, such as TenCate's Mirafi 1100N. The curtain drains should be pitched to drain to a positive outlet or to the nearest site drainage structure.

If possible, the curtain drains should be incorporated into a permanent underdrainage system at each of the proposed tanks, as recommended in Section 9.3 above. If permanent drainage is not possible, the curtain drains should be removed before each tank is backfilled and the resulting trench should be backfilled with flowable fill.

10.4 Fill and Backfill Materials

Imported structural fill, to be placed behind building and tank walls and beneath building foundations, should be a well-graded durable granular material consisting of clean sand, gravel, or a mixture of these, and it should be free of trash, debris, roots, vegetation or other deleterious materials. The structural fill should consist of material meeting the gradation requirements for NYSDOT Select Granular Fill (Item No. 733.1101), as follows:

Sieve Size	Percent Finer by Weight
4 Inch	100
No. 40	0-70
No. 200	0-15

Based on the results of the test borings and laboratory testing, the native on-site soils will not meet the select granular fill requirement, because of the percentages of soil passing the number 200 sieve. However, as previously noted, it may be used as tank and foundation wall backfill, provided that all cobbles larger than 4 inches in diameter have been removed prior to placement.

All fill and backfill (select granular, or on-site soils) should be compacted to at least 95 percent of the maximum dry density, within 2 percent of the optimum moisture content, as determined by ASTM D1557. The lift thickness for the fill soils will vary depending on the type of compaction equipment used. Fills should generally be placed in uniform horizontal lifts not exceeding 12 inches in loose thickness. In confined areas, the loose lift thickness should be 6 inches or less and each lift should be compacted with sufficient passes of hand operated vibratory or impact compaction equipment. A geotechnical

engineer with appropriate field and laboratory support should inspect all footing subgrades, approve materials for use as fill, and test backfill materials for compliance with the recommended compaction.

Free draining crushed stone placed below slabs and as drainage materials behind foundation walls, as underdrains beneath tanks, and within curtain drains should meet the specification for Underdrain Filter Type I materials, as specified in the NYSDOT Standard Specifications (Item 733.2001), as follows:

Sieve Size	Percent Finer by Weight
1 inch	100
½ inch	30-100
¼ inch	0 – 30
No. 10	0 – 10
No. 20	0 – 5

As an alternative, crushed stone meeting the gradation requirements of ASTM C33, Number 57 stone may also be used as free draining crushed stone.

Flowable fill, used to backfill temporary curtain drains and excavations to undercut unsuitable materials from beneath tank foundations and floors, should have a minimum 28-day unconfined compressive strength of 150 psi and should meet the requirements for Controlled Low Strength Material (CLSM), as specified in Section 733-01 – "Flowable Fill" of the NYSDOT Standard Specifications.

10.5 Excavations and Shoring

Temporary excavation shoring should conform to the latest OSHA standards. For this project, the near-surface soils on-site should be considered to be OSHA type C soils, while soils encountered below a depth of approximately 12 feet and the existing bedrock can be considered to be OSHA type B soils. Adequate dewatering operations should be available prior to excavation to prevent slopes from sloughing to a flatter inclination. Based on the preliminary project plans, it is expected that excavation support might be necessary around some portions of the proposed tank excavations, because of nearby structures; while other portions of the excavations may be sloped.

Design of excavation support should conform to the latest OSHA and other applicable agency requirements. Design of all excavation slopes, sheeting, shoring, and bracing for excavations with depths greater than 4 feet should be performed by a New York State licensed Professional Engineer. Based on the presence of shallow bedrock at the site, it is anticipated that shoring will need to be socketed into the deep soils and/or competent bedrock.

Excavations into the existing native soil and into weathered rock, near the bedrock surface, should be feasible using standard heavy construction equipment (i.e. hydraulic excavators). It should be expected that excavation into the sound bedrock will require the use of, rippers, excavator-mounted hoe-rams, or drilling and splitting techniques. Given the proximity to other structures, it is not recommended that blasting be used to excavate bedrock.

11.0 ADDITIONAL ENGINEERING

The scope of this subsurface investigation, and the resulting geotechnical recommendations, were based on widely scattered borings. Furthermore, in most cases, only one or two borings were drilled at the location of each of the proposed structures and most of these borings were drilled at or near the downhill sides or corners of the proposed structures. Given the variable bedrock and groundwater elevations encountered within the borings, it is anticipated that both the groundwater and bedrock elevations near the uphill sides of the proposed tanks will likely be higher than measured. The limited subsurface information has led to conservative estimates of design groundwater and bedrock elevations for the proposed tanks, as well as conservative recommendations for soil and bedrock bearing, and anchors. However, these are just estimates.

Based on the circumstances noted above, it is recommended that a supplemental subsurface investigation be performed after preliminary design has been completed, but before the final design is commenced. This will allow for refinement of the design and will help minimize the potential for potential significant change orders related to dewatering, rock excavation and anchor installation (if necessary).

The supplemental investigation should be designed to obtain additional information about bedrock and groundwater elevations at each of the proposed tanks and to obtain additional soil and groundwater information at the proposed control building. It is recommended that the supplemental subsurface investigation consist of the drilling of approximately two (2) additional borings at each of the proposed structures, to provide adequate coverage for accurate estimates of bedrock topography at each tank and to provide groundwater elevations at

each structure. The former will allow bidding contractors to accurately estimate the amount of rock removal that may be necessary at each tank, while the latter will allow for refinement of design for temporary and/or permanent dewatering, or the estimation of buoyant forces that will need to be resisted by anchors. Additional soil and bedrock sampling and testing could also allow for refinement of foundation, slab and anchor designs. This additional data may also be used for design of construction excavation support. Tectonic will be glad to work with the Client in developing an appropriate supplemental investigation that will fit their needs.

12.0 CONSTRUCTION MONITORING

A geotechnical engineer familiar with the existing subsurface conditions and having the appropriate laboratory and field-testing support should be engaged by the owner to observe that all earthwork is performed in accordance with the specifications, the Code, and the design criteria provided in this report.

The following work should be performed under the observation of the geotechnical engineer:

- Pre-existing conditions survey and monitoring of adjacent buildings
- Foundation subgrade preparation
- Proofrolling of floor and foundation subgrades
- Temporary dewatering activities
- Installation of curtain and under drains.
- Placement and compaction of fill and backfill
- Vibration monitoring during rock removal

All materials proposed for use as soil fill should be tested and approved prior to delivery or use on-site. All fill materials should be tested as they are being placed to verify that the required compaction is being achieved.

13.0 LIMITATIONS

Our professional services have been performed using the degree of care and skill ordinarily exercised under similar circumstances by reputable geotechnical engineers and geologists practicing in this or similar situations. The interpretation of the field data is based on good judgment and experience. However, no matter how qualified the geotechnical engineer or detailed the investigation, subsurface conditions cannot always be predicted between the points of actual sampling and testing. No other warranty, expressed or implied, is made as to professional advice included in this report.

The recommendations and data contained in this report are intended for preliminary design purposes only. The use of this report as a construction document is neither intended nor authorized by Tectonic Engineering Consultants, Geologists & Land Surveyors, D.P.C. (Tectonic). Contractors and others involved in the construction of this project are advised to make an independent assessment of the subsurface conditions for establishing quantities, schedules and construction techniques.

This report has been prepared for the exclusive use of the Town of New Windsor and their designees for the specific application to the proposed construction described in this report. In the event that any changes in nature, design or location of proposed structures are planned, the conclusions and recommendations contained in this report shall not be considered valid unless the changes are reviewed and conclusions modified or verified in writing by Tectonic. It is recommended that Tectonic be retained to review the plans and specifications prior to bidding and to provide construction monitoring and inspection services to ensure proper implementation of the recommendations contained herein, which would otherwise limit our professional liability.

MAS/MCC G:\Newburgh\Geotechnical\9900\9928.01 Caesars Lane Wastewater Treatment Plant\Report\Final\9928.01 Geotechnical Report.docx

FIGURE I

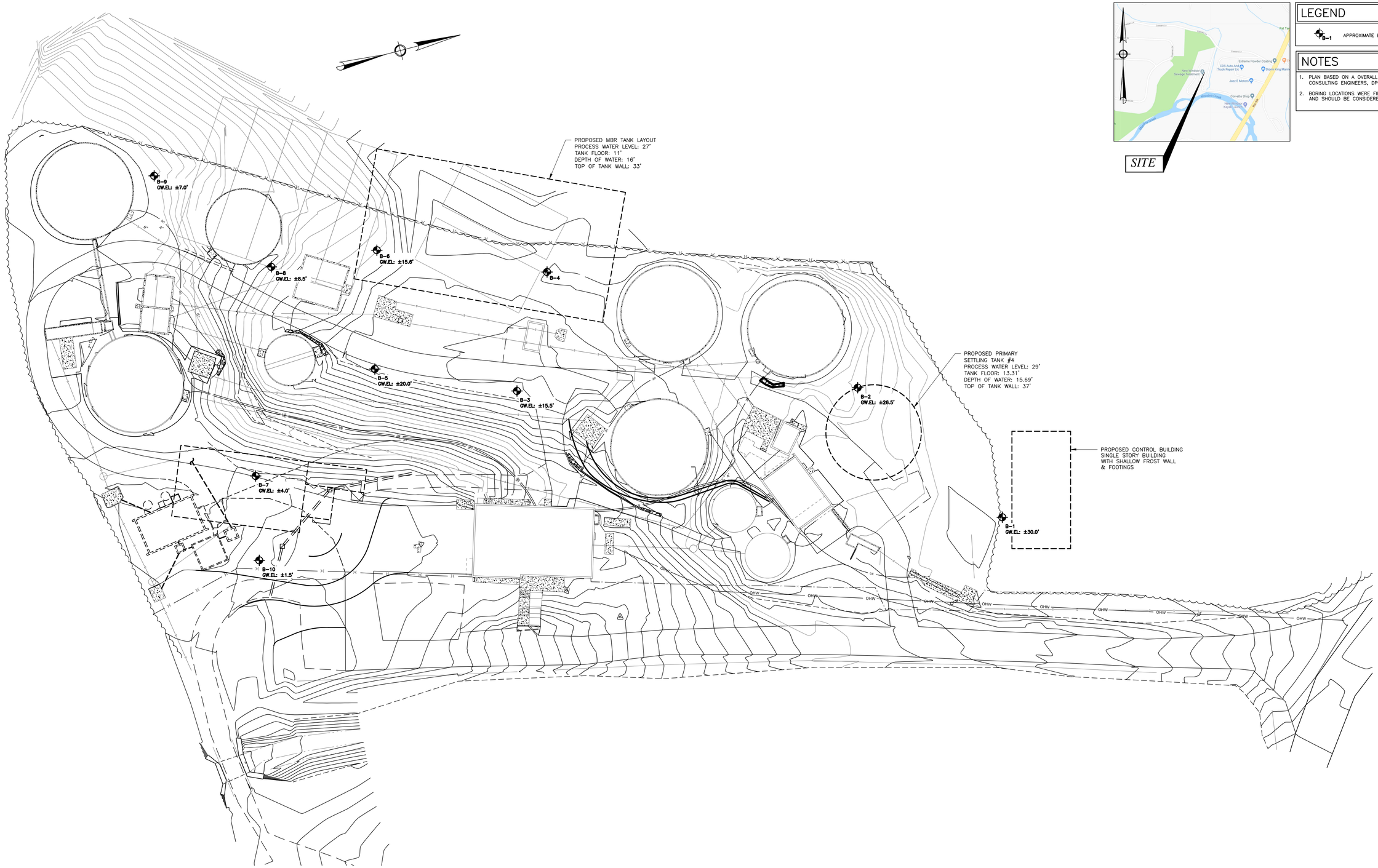

LEGEND

B-1 APPROXIMATE BORING LOCATION

NOTES

1. PLAN BASED ON A OVERALL FACILITY PLAN, BY MH & E CONSULTING ENGINEERS, DPC, DATED 2/1/2019.
2. BORING LOCATIONS WERE FIELD LOCATED BY TECTONIC AND SHOULD BE CONSIDERED APPROXIMATE.

Tectonic
PRACTICAL SOLUTIONS. EXCEPTIONAL SERVICE.
Tectonic Engineering & Surveying Consultants P.C.
70 Pleasant Hill Road — Phone: (845) 534-5959
P.O. Box 37 — (800) 829-6531
Mountainville, NY 10953 — www.tectonicengineering.com
Project Contact Info
1279 Route 300
Newburgh, NY 12550 — Phone: (845) 567-6656

COPIES OF THIS DOCUMENT WITHOUT AN ORIGINAL SIGNATURE AND AN ORIGINAL EMBOSSED SEAL OF THE PROFESSIONAL ENGINEER OR LAND SURVEYOR SHALL NOT BE CONSIDERED VALID COPIES.

CAESARS LANE WASTEWATER TREATMENT PLANT IMPROVEMENTS

TOWN OF NEW WINDSOR, ORANGE COUNTY
CAESARS LANE, NEW WINDSOR, NEW YORK

0 2 4
ORIGINAL SIZE IN INCHES

W.O. #: 9928.01

BORING LOCATION PLAN

DRAWING NO. FIGURE 1 | REV

APPENDIX I

Tectonic

PROJECT No. **9928.01**
PROJECT: **Caeser's Lane WWTP Improvements**
LOCATION: **New Windsor, NY**

BORING No. B-1

SHEET No. 1 of 1

CLIENT: **Town of New Windsor**
CONTRACTOR: **Craig Test Borings Co., Inc.**
METHOD OF ADVANCING BORING | DIA. | DEPTH
POWER AUGER: | | TO
ROT. DRILL: | **3 7/8"** | **0** TO **11'**
CASING: | **4"** | **0** TO **10'**
DIAMOND CORE: | | TO
CME 55 ATV with Automatic Hammer

GROUND WATER | DATE | TIME | DEPTH
| **6/12/19** | **2:00 PM** | **6'**

MON. WELL ☐ YES ☒ NO
SCREEN DEPTH: **---** TO **---**
WEATHER: **Clear** TEMP: **75° F**
DEPTH TO ROCK: **11'**
*CHANGES IN STRATA ARE INFERRED

INSPECTOR: **Michael Bastien**
DRILLER: **Mike Tarter**
SURFACE ELEVATION: **36.0**
DATUM: **See Remarks**
DATE START: **6/12/19**
DATE FINISH: **6/12/19**

UNCONFINED COMPRESS. STRENGTH (TONS/FT) ● 1 2 3 4 5
PLASTIC LIMIT % | WATER CONTENT % | LIQUID LIMIT %
10 20 30 40 50
STANDARD PENETRATION (BLOWS/FT.) ● 10 20 30 40 50

DEPTH (FT.)	N OR MIN./FT.	PENETRATION RESISTANCE (BL/6 IN.)	SAMPLES: SAMPLE NUMBER	RECOV. LENGTH (IN.)	RECOV. RQD (%)	MOISTURE	UNIFIED SOIL CLASS.	DESCRIPTION OF MATERIAL	LITHOLOGY*	ELEVATION (FT.)
1	11	1 4 7 8	S-1	16		M	SW	4" Topsoil Tn-bwn f SAND, trace Silt		
3	28	6 10 18 14	S-2	16		M	SM	Tn-bwn m-f SAND, little c Gravel, little Silt		
5	28	17 15 13 13	S-3	24		M	SM GM	1' Same 1' Gy CLAYEY SILT, some c-f Gravel, some c-f Sand		31.0
7	29	21 17 12 12	S-4	20		W	GM	Gy CLAYEY SILT, some c-f Gravel, some c-f Sand		
9	16	9 8 8 8	S-5	24		W	SM	Gy-bwn m-f SAND, and Silty Clay, trace c Gravel		26.0
11	50+	50/4	S-6					No Recovery (Drill bit refusal @ 11')		
								End of Boring at 11.33'		21.0
										16.0
										11.0

REMARKS: Surface elevation was estimated to the nearest 0.5-foot by interpolating between contour lines shown on a draft "Proposed Overall Facilities Plan', Sheet SP-1, prepared by McGoey, Hauser & Edsall.

BORING LOG 9928.01.GPJ TECTONIC.GDT 6/17/19

Tectonic

PROJECT No. **9928.01**
PROJECT: **Caeser's Lane WWTP Improvements**
LOCATION: **New Windsor, NY**

BORING No. B-2

SHEET No. 1 of 1

CLIENT: **Town of New Windsor**
CONTRACTOR: **Craig Test Borings Co., Inc.**
METHOD OF ADVANCING BORING | DIA. | DEPTH
POWER AUGER: | | TO
ROT. DRILL: | **3 7/8"** | **0** TO **19'**
CASING: | **4"** | **0** TO **15'**
DIAMOND CORE: | | TO
CME 55 ATV with Automatic Hammer

GROUND WATER | DATE | TIME | DEPTH
| **6/12/19** | **12:30 PM** | **4'**

INSPECTOR: **Michael Bastien**
DRILLER: **Mike Tarter**
SURFACE ELEVATION: **30.5**
MON. WELL ☐ YES ☒ NO
DATUM: **See Remarks**
SCREEN DEPTH: **---** TO **---**
DATE START: **6/12/19**
WEATHER: **Clear** TEMP: **75° F**
DATE FINISH: **6/12/19**
DEPTH TO ROCK: **16'**
*CHANGES IN STRATA ARE INFERRED

UNCONFINED COMPRESS. STRENGTH (TONS/FT) ◓ 1 2 3 4 5
PLASTIC LIMIT % | WATER CONTENT % | LIQUID LIMIT %
10 20 30 40 50
STANDARD PENETRATION (BLOWS/FT.) ● 10 20 30 40 50

DEPTH (FT.)	N OR MIN./FT.	PENETRATION RESISTANCE (BL/6 IN.)	SAMPLES: SAMPLE NUMBER	RECOV. LENGTH (IN.)	RECOV. RQD (%)	MOISTURE	UNIFIED SOIL CLASS.	DESCRIPTION OF MATERIAL	LITHOLOGY*	ELEVATION (FT.)
1	31	5 13 18 9	S-1	12		M	SC	4" Topsoil Bwn c-f GRAVEL, some c-f Gravel, little Silt Clay		
3	3	3 2 1 1	S-2	8		M	CL	Bwn SILTY CLAY, and c-f Sand, trace m-f Gravel		
5	6	1 1 5 4	S-3	12		W	CL	Same		25.5
7	6	2 3 3 3	S-4	16		W	CL	Gy SILTY CLAY, some c-f Sand, little c-f Gravel		
9	4	1 2 2 2	S-5	4		W	CL	Same		20.5
11	4	3 2 2 1	S-6	6		W	CL	Gy SILTY CLAY, some c-f Sand, little c-f Gravel		
13	48	59 14 34	S-7	6		W	SM	Gy-blk c-f SAND, some Silt, some f Gravel, likely weathered bedrock		
15										15.5
16	50+	20 50/2	S-8	4		W	SM	Gy-blk c-f SAND, some Silt, some f Gravel, likely weathered bedrock		
17										
18										
19								(Drill bit refusal @ 19')		
20								End of Boring at 19'		10.5
21										
22										
23										
24										
25										5.5

REMARKS: Surface elevation was estimated to the nearest 0.5-foot by interpolating between contour lines shown on a draft "Proposed Overall Facilities Plan', Sheet SP-1, prepared by McGoey, Hauser & Edsall.

BORING LOG 9928.01.GPJ TECTONIC.GDT 8/7/19

Tectonic

PROJECT No. **9928.01**
PROJECT: **Caeser's Lane WWTP Improvements**
LOCATION: **New Windsor, NY**

BORING No. B-3

SHEET No. 1 of 1

CLIENT: **Town of New Windsor**
CONTRACTOR: **Craig Test Borings Co., Inc.**
METHOD OF ADVANCING BORING | DIA. | DEPTH
POWER AUGER: | | TO
ROT. DRILL: | 3 7/8" | 0 TO 20'
CASING: | 4" | 0 TO 10'
DIAMOND CORE: | | TO
CME 55 ATV with Automatic Hammer

GROUND WATER | DATE | TIME | DEPTH
6/12/19 | 11:00 AM | 15'

MON. WELL ☐ YES ☒ NO
SCREEN DEPTH: --- TO ---
WEATHER: **Clear** TEMP: **70° F**
DEPTH TO ROCK: **22'**
*CHANGES IN STRATA ARE INFERRED

INSPECTOR: **Michael Bastien**
DRILLER: **Mike Tarter**
SURFACE ELEVATION: ~~29.0~~ 30.5
DATUM: **See Remarks**
DATE START: **6/12/19**
DATE FINISH: **6/12/19**

UNCONFINED COMPRESS. STRENGTH (TONS/FT) ● 1 2 3 4 5
PLASTIC LIMIT % | WATER CONTENT % | LIQUID LIMIT %
10 20 30 40 50
STANDARD PENETRATION (BLOWS/FT.) ● 10 20 30 40 50

DEPTH (FT.)	N OR MIN./FT.	PENETRATION RESISTANCE (BL/6 IN.)	SAMPLES: SAMPLE NUMBER	RECOV. LENGTH (IN.)	RECOV. RQD (%)	MOISTURE	UNIFIED SOIL CLASS.	DESCRIPTION OF MATERIAL	LITHOLOGY*	ELEVATION (FT.)
1	42	13 29 13 17	S-1	14		M	SM	Bwn c-f SAND, little c-f Gravel, little Clayey Silt		
3	6	4 3 3 2	S-2	10		M	SM	Same		
5	7	2 5 2 2	S-3	6		M	SM	Bwn-gy c-f SAND, little Clayey Silt, some c-f Gravel		24.0
7	40	5 14 26 17	S-4	12		M	SM	Bwn c-f SAND, some c-f Gravel, little Clayey Silt		
11	49	15 24 25 29	S-5	22		M	SM	Bwn c-f SAND, and Clayey Silt, little c-f Gravel		19.0
15								▼		14.0
16	73	36 39 34 36	S-6	18		W	SM	Gy c-f SAND, some Clayey Silt, little c-f Gravel		73
21	102	42 47 55 60/4	S-7	22		W	SC	Dk gy-bl SILTY CLAY, some c-f Sand, little c-f Gravel, likely weathered rock		9.0 102
22								End of Boring at 22'		4.0

REMARKS: Surface elevation was estimated to the nearest 0.5-foot by interpolating between contour lines shown on a draft "Proposed Overall Facilities Plan', Sheet SP-1, prepared by McGoey, Hauser & Edsall.

BORING LOG 9928.01.GPJ TECTONIC.GDT 8/14/19

Tectonic

PROJECT No. **9928.01**
PROJECT: **Caeser's Lane WWTP Improvements**
LOCATION: **New Windsor, NY**

BORING No. B-4

SHEET No. 1 of 1

CLIENT: **Town of New Windsor**
CONTRACTOR: **Craig Test Borings Co., Inc.**
METHOD OF ADVANCING BORING | DIA. | DEPTH
POWER AUGER: | | TO
ROT. DRILL: | **3 7/8"** | **0** TO **20'**
CASING: | **4"** | **0** TO **10'**
DIAMOND CORE: | | TO
CME 55 ATV with Automatic Hammer

GROUND WATER | DATE | TIME | DEPTH

MON. WELL ☐ YES ☒ NO
SCREEN DEPTH: **---** TO **---**
WEATHER: **Clear** TEMP: **70° F**
DEPTH TO ROCK: **20.5'**
*CHANGES IN STRATA ARE INFERRED

INSPECTOR: **Kimberly Junkins**
DRILLER: **Mike Tarter**
SURFACE ELEVATION: **29.0**
DATUM: **See Remarks**
DATE START: **6/11/19**
DATE FINISH: **6/11/19**

UNCONFINED COMPRESS. STRENGTH (TONS/FT) ● 1 2 3 4 5
PLASTIC LIMIT % | WATER CONTENT % | LIQUID LIMIT % 10 20 30 40 50
STANDARD PENETRATION (BLOWS/FT.) ● 10 20 30 40 50

DEPTH (FT.)	N OR MIN./FT.	PENETRATION RESISTANCE (BL/6 IN.)	SAMPLES: SAMPLE NUMBER	RECOV.: LENGTH (IN.)	RECOV.: RQD (%)	MOISTURE	UNIFIED SOIL CLASS.	DESCRIPTION OF MATERIAL	LITHOLOGY*	ELEVATION (FT.)
1	25	3 6 19 12	S-1	18		M	SM	3" Topsoil Bwn-rd c-f SAND, some c-f Gravel, little Silt		
3	57	16 41 16 8	S-2	6		M	GM	Gy c-f GRAVEL, some c-f Sand, little Silt		
5	34	22 16 18 10	S-3	8		M	SM	Gy c-f SAND, little f Gravel, little Silt		24.0
7	29	9 13 16 18	S-4	12		M	SM	Gy c-f SAND, little f Gravel, little Silt		
11	57	10 30 27 30	S-5	20		M	SM	Gy c-f SAND, little c-f Gravel, little Silt		19.0
16	44	10 17 27 80	S-6	12		M	SM	Gy c-f SAND, some Silt, little f Gravel		14.0
20								Bit refusal @ 20.5'		9.0
								End of Boring at 20.5'		4.0

REMARKS: Surface elevation was estimated to the nearest 0.5-foot by interpolating between contour lines shown on a draft "Proposed Overall Facilities Plan', Sheet SP-1, prepared by McGoey, Hauser & Edsall.

BORING LOG 9928.01.GPJ TECTONIC.GDT 6/14/19

Tectonic

PROJECT No. **9928.01**
PROJECT: **Caeser's Lane WWTP Improvements**
LOCATION: **New Windsor, NY**

BORING No. B-5

SHEET No. 1 of 1

CLIENT: **Town of New Windsor**
CONTRACTOR: **Craig Test Borings Co., Inc.**

METHOD OF ADVANCING BORING	DIA.	DEPTH
POWER AUGER:		TO
ROT. DRILL:	3 7/8"	0 TO 20'
CASING:	4"	0 TO 20'
DIAMOND CORE:		TO

CME 55 ATV with Automatic Hammer

GROUND WATER	DATE	TIME	DEPTH
	6/12/19	8:15 AM	10'

MON. WELL ☐ YES ☒ NO
SCREEN DEPTH: --- TO ---
WEATHER: **Clear** TEMP: **75° F**
DEPTH TO ROCK: **20'**
*CHANGES IN STRATA ARE INFERRED

INSPECTOR: **Kimberly Junkins**
DRILLER: **Mike Tarter**
SURFACE ELEVATION: **30.0**
DATUM: **See Remarks**
DATE START: **6/11/19**
DATE FINISH: **6/12/19**

UNCONFINED COMPRESS. STRENGTH (TONS/FT) ● 1 2 3 4 5
PLASTIC LIMIT % × — WATER CONTENT % ⊗ — LIQUID LIMIT % △ 10 20 30 40 50
STANDARD PENETRATION (BLOWS/FT.) ● 10 20 30 40 50

DEPTH (FT.)	N OR MIN./FT.	PENETRATION RESISTANCE (BL/6 IN.)	SAMPLES: SAMPLE NUMBER	RECOV. LENGTH (IN.)	RECOV. RQD (%)	MOISTURE	UNIFIED SOIL CLASS.	DESCRIPTION OF MATERIAL	LITHOLOGY*	ELEVATION (FT.)
1	14	3, 7, 7, 7	S-1	4		M	GP	3" Topsoil Bwn c-f GRAVEL, some c-f Sand, trace Silt		
3	30	10, 15, 15, 18	S-2	0				No Recovery		
6	46	8, 26, 20, 14	S-3	6		M	SM	Gy c-f SAND, some c-f Gravel, little Silt		25.0
10										
11	22	10, 12, 10, 9	S-4	8		W	SM	Gy-bwn c-f SAND, some Silty Clay, little c-f Gravel		20.0
16	14	1, 0, 14, 8	S-5	0				No Recovery		15.0
20	50+	50/0	S-6	0				No Recovery		10.0
								End of Boring at 20'		5.0

REMARKS: Surface elevation was estimated to the nearest 0.5-foot by interpolating between contour lines shown on a draft "Proposed Overall Facilities Plan', Sheet SP-1, prepared by McGoey, Hauser & Edsall.

BORING LOG 9928.01.GPJ TECTONIC.GDT 8/7/19

Tectonic

PROJECT No.	9928.01
PROJECT:	Caeser's Lane WWTP Improvements
LOCATION:	New Windsor, NY

BORING No. B-6

SHEET No. 1 of 1

CLIENT: Town of New Windsor		GROUND WATER	DATE	TIME	DEPTH
CONTRACTOR: Craig Test Borings Co., Inc.			6/11/19	11:30 AM	11.4'
METHOD OF ADVANCING BORING	DIA.	DEPTH			
POWER AUGER:		TO	MON. WELL	☐ YES	☒ NO
ROT. DRILL:	3 7/8"	0 TO 31'	SCREEN DEPTH:	--- TO ---	
CASING:	4"	0 TO 20'	WEATHER: Overcast	TEMP: 65° F	
DIAMOND CORE:	3"	21 TO 23.5'	DEPTH TO ROCK: 21'		
CME 55 ATV with Automatic Hammer			*CHANGES IN STRATA ARE INFERRED		

INSPECTOR:	Kimberly Junkins
DRILLER:	Mike Tarter
SURFACE ELEVATION:	27.0
DATUM:	See Remarks
DATE START:	6/11/19
DATE FINISH:	6/11/19

UNCONFINED COMPRESS. STRENGTH (TONS/FT) 1 2 3 4 5

PLASTIC LIMIT % — WATER CONTENT % — LIQUID LIMIT % 10 20 30 40 50

STANDARD PENETRATION (BLOWS/FT.) 10 20 30 40 50

DEPTH (FT.)	N OR MIN./FT.	PENETRATION RESISTANCE (BL/6 IN.)	SAMPLE NUMBER	RECOV. LENGTH (IN.)	RECOV. RQD (%)	MOISTURE	UNIFIED SOIL CLASS.	DESCRIPTION OF MATERIAL	ELEVATION (FT.)
1	16	2 4 12 21	S-1	18		M	SM	3" Topsoil Bwn c-f SAND, little c-f Gravel, little Silt	
3	38	10 22 16 20	S-2	24		M	SM	Bwn c-f SAND, trace f Gravel, little Silt	
6	9	4 4 5 5	S-3	6		M	SM	Bwn c-f SAND, little c-f Gravel, little Silt	22.0
11	12	4 5 7 9	S-4	15		M	SM	Bwn c-f SAND, some Silt, trace f Gravel	17.0
16	104	4 4 100	S-5	4		W	SM	Gy c-f SAND, trace f Gravel, trace Silt	12.0
20	100+	13 100/6	S-6	2		W	GP	Gy-bwn c-f GRAVEL, some c-f Sand, litle Silt	7.0
22	6 4 8		C-1	21/30	22			Gy, slightly weathered, moderately to highly fractured, fine grained, medium hard SHALE; fractures 0 to 90 degrees from horizontal	
24								End of Boring at 23.5'	2.0

REMARKS: Surface elevation was estimated to the nearest 0.5-foot by interpolating between contour lines shown on a draft "Proposed Overall Facilities Plan', Sheet SP-1, prepared by McGoey, Hauser & Edsall.

BORING LOG 9928.01.GPJ TECTONIC ENG.GDT 6/21/19

Tectonic

PROJECT No. **9928.01**
PROJECT: **Caeser's Lane WWTP Improvements**
LOCATION: **New Windsor, NY**

BORING No. B-7

SHEET No. 1 of 1

CLIENT: **Town of New Windsor**
CONTRACTOR: **Craig Test Borings Co., Inc.**
METHOD OF ADVANCING BORING | DIA. | DEPTH
POWER AUGER: | | TO
ROT. DRILL: | **3 7/8"** | **0** TO **12'**
CASING: | **4"** | **0** TO **10'**
DIAMOND CORE: | **2"** | TO
CME 55 ATV with Automatic Hammer

GROUND WATER | DATE | TIME | DEPTH
| **6/10/19** | **12:00 pm** | **5'**

MON. WELL ☐ YES ☒ NO
SCREEN DEPTH: **---** TO **---**
WEATHER: **Rain** TEMP: **60° F**
DEPTH TO ROCK: **12'**
*CHANGES IN STRATA ARE INFERRED

INSPECTOR: **Michael Bastien**
DRILLER: **Mike Tarter**
SURFACE ELEVATION: **9.0**
DATUM: **See Remarks**
DATE START: **6/10/19**
DATE FINISH: **6/10/19**

UNCONFINED COMPRESS. STRENGTH (TONS/FT) ● 1 2 3 4 5
PLASTIC LIMIT % | WATER CONTENT % | LIQUID LIMIT % ✕ ⊗ △ 10 20 30 40 50
STANDARD PENETRATION (BLOWS/FT.) ● 10 20 30 40 50

DEPTH (FT.)	N OR MIN./FT.	PENETRATION RESISTANCE (BL/6 IN.)	SAMPLES: SAMPLE NUMBER	RECOV. LENGTH (IN.)	RECOV. RQD (%)	MOISTURE	UNIFIED SOIL CLASS.	DESCRIPTION OF MATERIAL	LITHOLOGY*	ELEVATION (FT.)
1–2	27	16, 14, 13, 12	S-1	16		M	SM	Bwn-gy c-f SAND, little c-f Gravel, little Silty Clay (FILL)		
3–4	38	25, 22, 16, 19	S-2	24		M	SM	Same		
5								▼		4.0
6–7	7	6, 5, 2, 2	S-3	10		W	SM	Bwn c-f SAND, little c-f Gravel, little Silty Clay		
8–9	66+	6, 16, 50/2	S-4	8		W	GM	Bwn c-f GRAVEL, some c-f and, little Clayey Silt		66
10										-1.0
11–12	45	14, 19, 26, 28	S-5	12		W	SM	Bwn c-f SAND, some c-f Gravel, some Clayey Silt (Drill bit refusal @ 12')		
13								End of Boring at 12'		
14–15										-6.0
16–17										
18–19										
20										-11.0
21–22										
23–24										
25										-16.0

REMARKS: Surface elevation was estimated to the nearest 0.5-foot by interpolating between contour lines shown on a draft "Proposed Overall Facilities Plan', Sheet SP-1, prepared by McGoey, Hauser & Edsall.

BORING LOG 9928.01.GPJ TECTONIC.GDT 6/27/19

Tectonic

PROJECT No. **9928.01**
PROJECT: **Caeser's Lane WWTP Improvements**
LOCATION: **New Windsor, NY**

BORING No. B-8

SHEET No. 1 of 2

CLIENT: **Town of New Windsor**
CONTRACTOR: **Craig Test Borings Co., Inc.**
METHOD OF ADVANCING BORING | DIA. | DEPTH
POWER AUGER: | | TO
ROT. DRILL: | **3 7/8"** | **0** TO **31.5'**
CASING: | **4"** | **0** TO **10'**
DIAMOND CORE: | | TO
CME 55 ATV with Automatic Hammer

GROUND WATER | DATE | TIME | DEPTH
| **6/11/19** | **9:00 AM** | **13'**

MON. WELL ☐ YES ☒ NO
SCREEN DEPTH: **---** TO **---**
WEATHER: **Overcast** TEMP: **65° F**
DEPTH TO ROCK: **31.5'**
*CHANGES IN STRATA ARE INFERRED

INSPECTOR: **Kimberly Junkins**
DRILLER: **Mike Tarter**
SURFACE ELEVATION: **21.5**
DATUM: **See Remarks**
DATE START: **6/11/19**
DATE FINISH: **6/11/19**

UNCONFINED COMPRESS. STRENGTH (TONS/FT) ● 1 2 3 4 5
PLASTIC LIMIT % | WATER CONTENT % | LIQUID LIMIT % ✕ ⊗ △ 10 20 30 40 50
STANDARD PENETRATION (BLOWS/FT.) ● 10 20 30 40 50

DEPTH (FT.)	N OR MIN./FT.	PENETRATION RESISTANCE (BL/6 IN.)	SAMPLES: SAMPLE NUMBER	RECOV.: LENGTH (IN.)	RECOV.: RQD (%)	MOISTURE	UNIFIED SOIL CLASS.	DESCRIPTION OF MATERIAL	LITHOLOGY*	ELEVATION (FT.)
1	7	2 2 5 6	S-1	10		M	GM	Gravel at surface Bwn c-f GRAVEL, and c-f Sand, little Silt		
3	27	10 15 12 10	S-2	16		M	SM	Bwn & gy c-f SAND, some c-f Gravel, little Silt		
5										16.5
6	26	10 11 15 13	S-3	12		M	GM	Gy c-f GRAVEL, some c-f Sand, little Silt		
10										11.5
11	8	6 4 4 4	S-4	8		M	GM	Gy c-f GRAVEL, some c-f Sand, little Silt		
13	12	8 7 5 5	S-5	10		W	SM	Gy c-f SAND, some c-f Gravel, little Silt ▼		
15										6.5
16	8	5 4 4 3	S-6	4		W	SM	Gy c SAND, little Gravel, little Silt		
20										1.5
21	17	9 9 8 9	S-7	12		W	SM	Gy c-f SAND, trace Gravel, little Silt		
25										-3.5

REMARKS: Surface elevation was estimated to the nearest 0.5-foot by interpolating between contour lines shown on a draft "Proposed Overall Facilities Plan', Sheet SP-1, prepared by McGoey, Hauser & Edsall.

BORING LOG 9928.01.GPJ TECTONIC.GDT 8/7/19

Tectonic

PROJECT No. **9928.01**

PROJECT: **Caeser's Lane WWTP Improvements**

LOCATION: **New Windsor, NY**

BORING No. B-8

SHEET No. 2 of 2

CLIENT: **Town of New Windsor**

CONTRACTOR: **Craig Test Borings Co., Inc.**

DEPTH (FT.)	N OR MIN./FT.	PENETRATION RESISTANCE (BL/6 IN.)	SAMPLES: SAMPLE NUMBER	SAMPLES: RECOV. LENGTH (IN.)	SAMPLES: RECOV. RQD (%)	SAMPLES: MOISTURE	UNIFIED SOIL CLASS.	DESCRIPTION OF MATERIAL	LITHOLOGY*	ELEVATION (FT.)
26	13	5 6 7 7	S-8	6		W	SM	Gy c-f SAND, trace f Gravel, little Silt		
27										
28										
29										
30										-8.5
31	37	18 16 21 78	S-9	12		W	SM	Gy c-f SAND, some c-f Gravel, little Silt		
32										
33								End of Boring at 32'		
34										
35										-13.5
36										
37										
38										
39										
40										-18.5
41										
42										
43										
44										
45										-23.5
46										
47										
48										
49										
50										-28.5
51										
52										
53										
54										
55										-33.5

UNCONFINED COMPRESS. STRENGTH (TONS/FT)
1 2 3 4 5

PLASTIC LIMIT % — WATER CONTENT % — LIQUID LIMIT %
10 20 30 40 50

STANDARD PENETRATION (BLOWS/FT.)
10 20 30 40 50

REMARKS: Surface elevation was estimated to the nearest 0.5-foot by interpolating between contour lines shown on a draft "Proposed Overall Facilities Plan', Sheet SP-1, prepared by McGoey, Hauser & Edsall.

BORING LOG 9928.01.GPJ TECTONIC.GDT 9/24/19

Tectonic

PROJECT No. **9928.01**
PROJECT: **Caeser's Lane WWTP Improvements**
LOCATION: **New Windsor, NY**

BORING No. B-9

SHEET No. 1 of 1

CLIENT: **Town of New Windsor**
CONTRACTOR: **Craig Test Borings Co., Inc.**

METHOD OF ADVANCING BORING	DIA.	DEPTH
POWER AUGER:		TO
ROT. DRILL:	3 7/8"	0 TO 20'
CASING:	4"	0 TO 10'
DIAMOND CORE:		TO

CME 55 ATV with Automatic Hammer

GROUND WATER	DATE	TIME	DEPTH
	6/10/19	1:30 PM	5'

MON. WELL ☐ YES ☒ NO
SCREEN DEPTH: --- TO ---
WEATHER: Rain TEMP: 70° F
DEPTH TO ROCK: 20'
*CHANGES IN STRATA ARE INFERRED

INSPECTOR: **Michael Bastien**
DRILLER: **Mike Tarter**
SURFACE ELEVATION: **12.0**
DATUM: **See Remarks**
DATE START: **6/10/19**
DATE FINISH: **6/10/19**

UNCONFINED COMPRESS. STRENGTH (TONS/FT) ● 1 2 3 4 5
PLASTIC LIMIT % × WATER CONTENT % ⊗ LIQUID LIMIT % △ 10 20 30 40 50
STANDARD PENETRATION (BLOWS/FT.) ● 10 20 30 40 50

DEPTH (FT.)	N OR MIN./FT.	PENETRATION RESISTANCE (BL/6 IN.)	SAMPLES: SAMPLE NUMBER	RECOV.: LENGTH (IN.)	RECOV.: RQD (%)	MOISTURE	UNIFIED SOIL CLASS.	DESCRIPTION OF MATERIAL	LITHOLOGY*	ELEVATION (FT.)
1	21	3 7 14 15	S-1	18		M	SM	4" Topsoil Tn-bwn c-f SAND, some Silty Clay, little c-f Gravel		
3	29	9 11 18 16	S-2	18		M	SM	Tn-gy c-f SAND, some Clayey Silt, little c-f Gravel		
5										7.0
6	10	4 5 5 3	S-3	8		W	SM	Gy m-f SAND, some Silty Clay		
11	69	17 28 41 35	S-4	16		W	SM	Gy c-f SAND, little c-f Gravel, little Clayey Silt		2.0
16	32	5 8 24 25	S-5	12		W	SM	Tn-bwn c-f SAND, little c-f Gravel, little Clayey Silt		-3.0
20								(Drill bit refusal at 20')		-8.0
								End of Boring at 20'		-13.0

REMARKS: Surface elevation was estimated to the nearest 0.5-foot by interpolating between contour lines shown on a draft "Proposed Overall Facilities Plan', Sheet SP-1, prepared by McGoey, Hauser & Edsall. Could not core at 20' because the casing was deflected from vertical.

BORING LOG 9928.01.GPJ TECTONIC.GDT 8/21/19

Tectonic

PROJECT No. **9928.01**
PROJECT: **Caeser's Lane WWTP Improvements**
LOCATION: **New Windsor, NY**

BORING No. B-10

SHEET No. 1 of 1

CLIENT: **Town of New Windsor**
CONTRACTOR: **Craig Test Borings Co., Inc.**
METHOD OF ADVANCING BORING | DIA. | DEPTH
POWER AUGER: | | TO
ROT. DRILL: | **3 7/8"** | **0** TO **15'**
CASING: | **4"** | **0** TO **15'**
DIAMOND CORE: | **2"** | **15** TO **20'**
CME 55 ATV with Automatic Hammer

GROUND WATER | DATE | TIME | DEPTH
| **6/10/19** | **9:30 AM** | **6'**

MON. WELL ☐ YES ☒ NO
SCREEN DEPTH: **---** TO **---**
WEATHER: **Clear** TEMP: **60° F**
DEPTH TO ROCK: **15'**
*CHANGES IN STRATA ARE INFERRED

INSPECTOR: **Michael Bastien**
DRILLER: **Mike Tarter**
SURFACE ELEVATION: **7.5**
DATUM: **See Remarks**
DATE START: **6/10/19**
DATE FINISH: **6/10/19**

UNCONFINED COMPRESS. STRENGTH (TONS/FT) ● 1 2 3 4 5
PLASTIC LIMIT % | WATER CONTENT % | LIQUID LIMIT % ✕ ⊗ △ 10 20 30 40 50
STANDARD PENETRATION (BLOWS/FT.) ● 10 20 30 40 50

DEPTH (FT.)	N OR MIN./FT.	PENETRATION RESISTANCE (BL/6 IN.)	SAMPLE NUMBER	RECOV. LENGTH (IN.)	RQD (%)	MOISTURE	UNIFIED SOIL CLASS.	DESCRIPTION OF MATERIAL	LITHOLOGY*	ELEVATION (FT.)
1	18	4 9 9 8	S-1	24		M	CL	Topsoil Bwn c-f SAND, little Silty Clay, little c-f Gravel		
3	16	3 11 5 2	S-2	12		M	CL	Bwn SILTY CLAY, and m-f Sand, little c-f Gravel		
5	24	2 8 16 11	S-3	12		M	CL	Bwn SILTY CLAY, some c-f Sand, little f Gravel		2.5
7	21	10 7 14 24	S-4	10		W	GM	Bwn c-f GRAVEL, little c-f Sand, little Silty Clay		
9	52	27 28 24 21	S-5	1		W	GM	Same		-2.5
13								Drill chatter at 12.5' Possible boulder or bedrock at 13.5'		
15	50+	50/1	S-6	0		W		No Recovery		-7.5
18			C-1	30/60	43			Gy-lgt gy moderately weatherered, moderately to highly fractured, fine grained, hard SANDSTONE, with Granite intrusions, fractured at 50 - 60 degrees		-12.5
20								End of Boring at 20'		-17.5

REMARKS: Surface elevation was estimated to the nearest 0.5-foot by interpolating between contour lines shown on a draft "Proposed Overall Facilities Plan', Sheet SP-1, prepared by McGoey, Hauser & Edsall.

BORING LOG 9928.01.GPJ TECTONIC.GDT 6/27/19

Tectonic
PRACTICAL SOLUTIONS. EXCEPTIONAL SERVICE.

LEGEND FOR SOIL DESCRIPTION

COARSE GRAINED SOIL (Coarser then No. 200 Sieve)

DESCRIPTIVE TERM & GRAIN SIZE

TERM	SAND					GRAVEL
coarse - c	No.	4	Sieve to No.	10	Sieve	3" to 3/4"
medium - m	No.	10	Sieve to No.	40	Sieve	3/4" to 3/16"
fine - f	No,	40	Sieve to No.	200	Sieve	

COBBLES 3" to 10"

BOULDERS 10" +

GRADATION DESIGNATIONS	PROPORTIONS OF COMPONENT
fine, f	Less than 10% coarse to medium
medium to fine, m-f	Less than 10% coarse
medium, m	Less than 10% coarse and fine
coarse to medium, c-m	Less than 10% fine
coarse, c	Less than 10% medium and fine
coarse to fine, c-f	All greater than 10%

FINE GRAINED SOIL (Finer than No. 200 Sieve)

DESCRIPTION	PLASTICITY INDEX	PLASTICITY
Silt	0 - 1	none
Clayey Silt	2 - 5	slight
Silt & Clay	6 - 10	low
Clay & Silt	11 - 20	medium
Silty Clay	21 - 40	high
Clay	greater than 40	very high

PROPORTION

DESCRIPTIVE TERM	PERCENT OF SAMPLE WEIGHT
trace	1 - 10
little	10 - 20
some	20 - 35
and	35 - 50

The primary component is fully capitalized

COLOR

Blue - blue	Gy - gray	Wh - white
Blk - black	Or - orange	Yl - yellow
Bwn - brown	Rd - red	Lgt - light
Gn - green	Tn - tan	Dk - dark

SAMPLE NOTATION

S - Split Spoon Soil Sample
U - Undisturbed Tube Sample
C - Core Sample
B - Bulk Soil Sample
NR - No Recovery of Sample

WOC - Weight of Casing
WOR - Weight of Rods
WOH - Weight of Hammer
PPR - Compressive Strength based on Pocket Penetrometer
TV - Shear Strength (tsf) based on Torvane

ADDITIONAL CLASSIFICATIONS

New York City Building Code soil classifications are given in parentheses at the end of each description of material, if applicable. See sections 1804.2 of the 2008 Building Code for further details.

APPENDIX II

Boring #	Depth (Ft.)	Sample #	Specimen Description	% Gravel	% Sand	% Fines	USCS	Water Content	Liquid Limit	Plastic Limit	Plasticity Index	Penetro-meter (tsf)	Torvane (tsf)	Dry Density (pcf)	Organic Content (%)	pH
B-1	6.0	S-4	Gy Silt, some c-f Gravel, some c-f Sand	32.3	24.3	43.4		14								
B-10	4.0	S-3	Bwn SILT, some c-f Sand, little f Gravel	14.8	25.7	59.6		24								
B-2	12.0	S-7	Gy-Blk c-f SAND, some Silt, some f Gravel	23.7	51.1	25.2		9								
B-4	15.0	S-6	Gy c-f SAND, some Silt, little f Gravel	16.5	50.8	32.8		13								
B-6	10.0	S-4	Bwn c-f SAND, some Silt, trace f Gravel	2.3	64.6	33.0		14								
B-7	10.0	S-5	Bwn c-f Sand, some c-f Gravel, some Silt	30.4	43.2	26.5		11								

SUMMARY OF LAB BORINGS 9928.01.GPJ TECTONIC ENG.GDT 8/20/19

Tectonic

280 Little Britain Road, Bldg #2
Newburgh, NY 12550
Telephone: (845) 563-9081 Fax: (845) 563-9085

Summary of Laboratory Results

Project No: **9928.01** Date: **8/20/19**

Project: **Ceasars Lane WWTP Improvements**

Location: **New Windsor, NY**

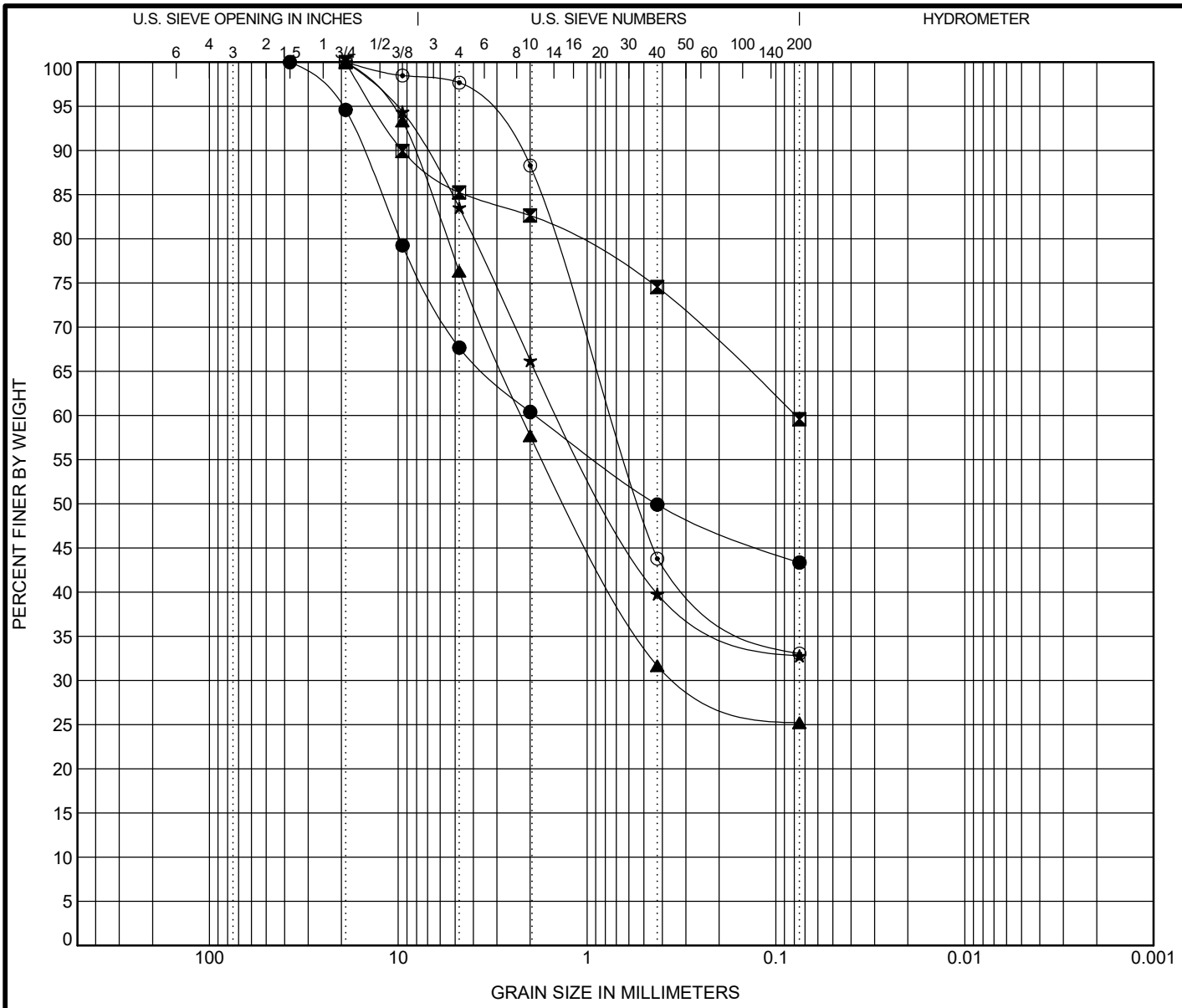

COBBLES	GRAVEL		SAND			SILT OR CLAY
	coarse	fine	coarse	medium	fine	

	Sample Identification			Classification	WC%	LL	PL	PI	Cc	Cu
●	B-1	6.0	S-4	Gy Silt, some c-f Gravel, some c-f Sand	13.9					
⊠	B-10	4.0	S-3	Bwn SILT, some c-f Sand, little f Gravel	24.2					
▲	B-2	12.0	S-7	Gy-Blk c-f SAND, some Silt, some f Gravel	9.5					
★	B-4	15.0	S-6	Gy c-f SAND, some Silt, little f Gravel	12.8					
⊙	B-6	10.0	S-4	Bwn c-f SAND, some Silt, trace f Gravel	14.0					

	Sample Identification			D100	D60	D30	D10	%Gravel	%Sand	%Silt	%Clay	Source of Material
●	B-1	6.0	S-4	37.5	1.886			32.3	24.3	43.4		Boring
⊠	B-10	4.0	S-3	19	0.079			14.8	25.7	59.6		Boring
▲	B-2	12.0	S-7	19	2.226	0.272		23.7	51.1	25.2		Boring
★	B-4	15.0	S-6	19	1.39			16.5	50.8	32.8		Boring
⊙	B-6	10.0	S-4	19	0.747			2.3	64.6	33.0		Boring

Tectonic
280 Little Britain Road, Bldg #2
Newburgh, NY 12550
Telephone: (845) 563-9081 Fax: (845) 563-9085

GRAIN SIZE DISTRIBUTION

Project No: **9928.01** Date: **8/20/19**

Project: **Ceasars Lane WWTP Improvements**

Location: **New Windsor, NY**

GRAIN SIZE DISTRIBUTION 9928.01.GPJ TECTONIC ENG.GDT 8/20/19

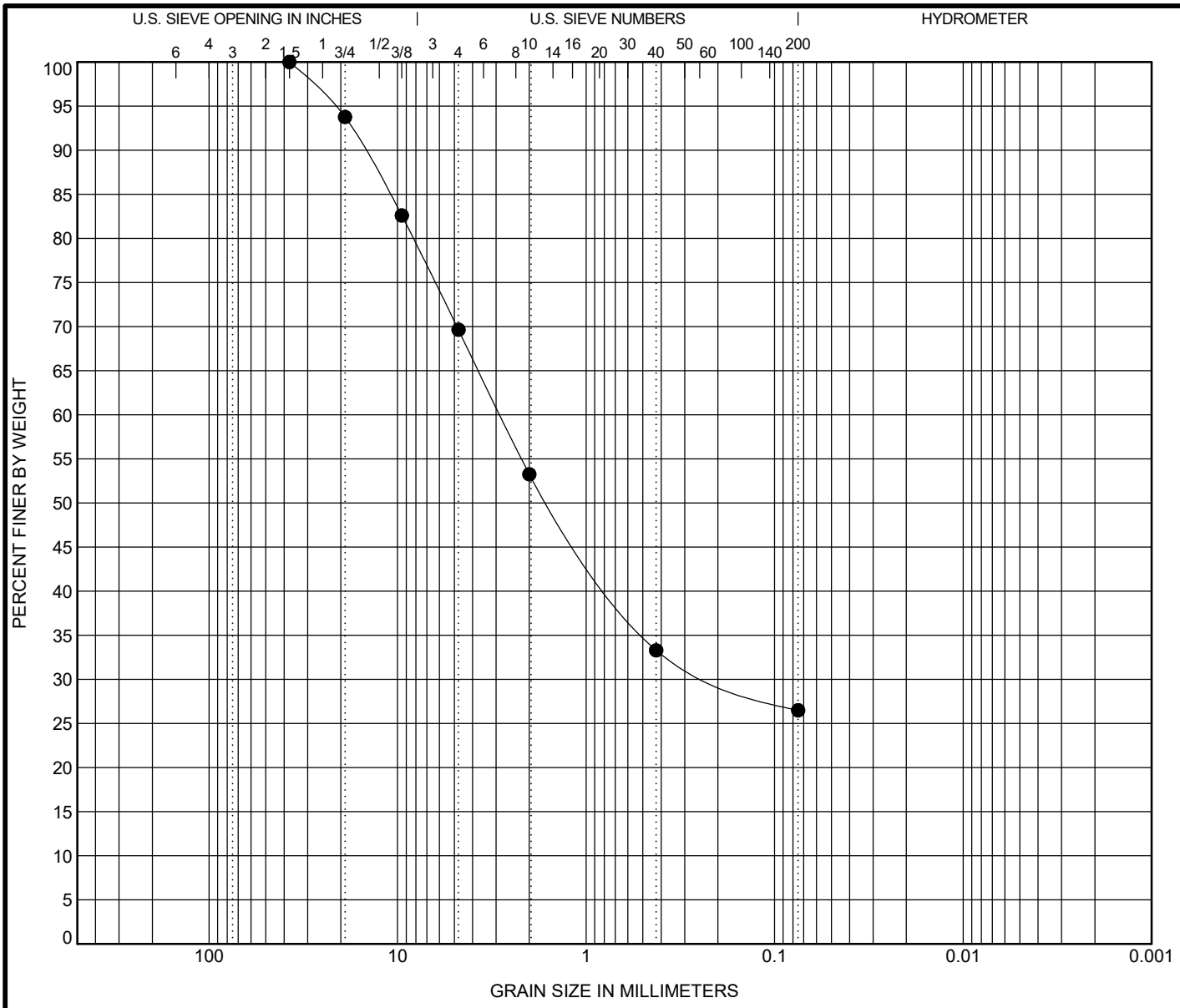

COBBLES	GRAVEL		SAND			SILT OR CLAY
	coarse	fine	coarse	medium	fine	

	Sample Identification	Classification	WC%	LL	PL	PI	Cc	Cu
●	**B-7 10.0 S-5**	**Bwn c-f Sand, some c-f Gravel, some Silt**	**11.4**					

	Sample Identification	D100	D60	D30	D10	%Gravel	%Sand	%Silt	%Clay	Source of Material
●	**B-7 10.0 S-5**	**37.5**	**2.856**	**0.184**		**30.4**	**43.2**	**26.5**		**Boring**

Tectonic

280 Little Britain Road, Bldg #2
Newburgh, NY 12550
Telephone: (845) 563-9081 Fax: (845) 563-9085

GRAIN SIZE DISTRIBUTION

Project No: **9928.01** Date: **8/20/19**

Project: **Ceasars Lane WWTP Improvements**

Location: **New Windsor, NY**

GRAIN SIZE DISTRIBUTION 9928.01.GPJ TECTONIC ENG.GDT 8/20/19

Point Load Strength Test

ASTM D 5731-08

Date: August 19, 2019
Project: Ceasars Lane WWTP; New Windsor, NY
W.O.#: 9928.01

Boring No.	Depth (ft)	Length (in)	Diameter (in)	Diameter (mm)	Load Direction	Maximum Load (kN)	Point Load Strength Index (MPa)	Description
B-6, C-1 (A)	21 - 23.5	1.968	5.0433	128.10	Diametrical	19.78	1.205	Gy, fine grained Shale
B-6, C-1 (B)	21 - 23.5	1.975	5.068	128.73	Diametrical	21.88	1.320	
						AVERAGE	**1.263**	
B-10, C-1 (A)	15 - 17	1.97	11.5	292.10	Diametrical	27.15	0.318	Gy to Lt Gy Sandstone
B-10, C-1 (B)	15 - 17	1.967	5.75	146.05	Diametrical	28.19	1.322	
						AVERAGE	**0.820**	

Tectonic Engineering
280 Little Britain Road, Bldg.#2
Newburgh, NY 12550

Our Story

For the past 30 years, Tectonic has delivered quality professional services in a timely and cost effective manner by pooling its talented staff into project teams that think, act, and perform as one integral unit. By carefully listening and collaborating with its clients, the firm is able to identify the key issues and assure stakeholder objectives are met in the final deliverables. Through innovating and adopting technological advances, the firm is able to generate unique solutions to improve our nation's deteriorating infrastructure and build safe sustainable communities.

As the world evolves, and its challenges grow more complex, Tectonic continues to innovate and provide the practical solutions and exceptional customer service its clients have trusted since its founding.

www.TectonicEngineering.com

Tectonic
MOUNTAINVILLE, NY (CORPORATE OFFICE)
70 Pleasant Hill Road, PO Box 37
Mountainville, NY, 10953
Phone: 845-534-5959
Fax: 845-534-59993

EXHIBIT E

Stormwater Pollution Prevention Plan (SWPPP) for Caesars Lane Wastewater Treatment Plant Expansion Project Prepared by MHE Engineering

STORMWATER POLLUTION PREVENTION PLAN (SWPPP)

FOR

CAESARS LANE WASTEWATER TREATMENT PLANT EXPANSION PROJECT

TOWN OF NEW WINDSOR
ORANGE COUNTY, NEW YORK

PREPARED FOR:
Town of New Windsor
555 Union Avenue
New Windsor, NY 12553

PREPARED BY:
MHE Engineering, D.P.C.
111 Wheatfield Drive, Suite 1
Milford, PA 18337

NOTE: ANY UNAUTHORIZED ALTERATION OR ADDITION TO THIS DOCUMENT IS A VIOLATION OF SECTION 7209(2) OF THE NEW YORK STATE EDUCATION LAW.

DATE: 21 November 2024
REVISED: 18 April 2025
JOB #: 18-732

F:\2018\18-732 Caesar Lane WWTP Improvements\Expansion Phase\SWPPP\April 2025 SWPPP 4-11-25\SWPPP 4-18-25.Docx

NEW YORK OFFICE
33 Airport Center Drive, Suite 202, New Windsor, NY 12553
845-567-3100 | F: 845-567-3232 | mheny@mhepc.com

PENNSYLVANIA OFFICE
111 Wheatfield Drive, Suite 1, Milford, PA 18337
570-296-2765 | F: 570-296-2767 | mhepa@mhepc.com

Table of Contents

1. INTRODUCTION 1

2. GENERAL SITE INFORMATION 1

2.1. Phase 1 Scope of Work 1

2.2 Phase 2 Scope of Work 2

2.3 Topography and Soils 2

2.4 Wetlands, Existing Outfall Demolition and Environmental Resources 2

2.5 Archaeology and Historic Preservation 3

3. STORMWATER ASSESSMENT AND METHODOLOGY 3

3.1 Permit Requirements 3

3.2 Rainfall 4

3.3 Design Process 4

3.4 Planning for Green Infrastructure 5

3.5 Water Quality Volume 5

3.6 Runoff Reduction Volume 6

3.6.1 Bypass Swales 7

3.7 Post Construction Stormwater Management Practices 7

3.7.1 Bioretention Basins 7

3.7.2 Proprietary Devices 8

3.8 Channel Protection Volume 8

3.9 Overbank and Extreme Flood (10 yr and 100 yr Storms) 8

4. EROSION AND SEDIMENTATION CONTROL 8

4.1 Erosion and Sedimentation Control Practices 8

5. OPERATION AND MAINTENANCE 10

6. NOI, MS4, AND CONTRACTORS CERTIFICATION 10

7. CONCLUSION 11

APPENDICES

APPENDIX A .....PROJECT SITE PLANS

FIGURE 1.....OVERALL PROJECT SITE PLAN (PHASE 2)

FIGURE 2.....EXISTING CONDITIONS IMPERVIOUS AREA PLAN

FIGURE 3.....PROPOSED CONDITIONS IMPERVIOUS AREA PLAN

FIGURE 4.....PROPOSED DRAINAGE AREA STUDY MAP

FIGURE 5.....EXISTING PLANT OUTFALL SYSTEM MAP

FIGURE 6.....EXISTING OUTFALL ABANDONMENT PLAN AND DETAILS

FIGURE 7.....PHASE 1 OVERALL SITE PLAN

FIGURE 8.....PHASE 1 NEW CONTROL BUILDING SITE PLAN (SHEET 1 OF 2)

FIGURE 9.....PHASE 1 NEW CONTROL BUILDING (SHEET 2 OF 2)

FIGURE 10.....PHASE 1 EXISTING CONTROL BUILDING SITE PLAN

APPENDIX B.....GENERAL PERMIT #GP-0-20-001 & REQUEST TO CONTINUE COVERAGE

APPENDIX C..... WEB SOIL SURVEY

APPENDIX D ..... SHPO LETTER

APPENDIX E..... RAINFALL DATA

APPENDIX F.....CALCULATIONS

APPENDIX G ..... HYDROCAD MODELING OUTPUT

APPENDIX H ..... ADS BARRACUDA PRODUCT INFORMATION

APPENDIX I.....STREAM STATS OUTPUT

APPENDIX J. .....BIO-RETENTION AND SWALE O&M INSPECTION CHECKLIST

APPENDIX K.....NOTICE OF INTENT (NOI) AND MS4 ACCEPTANCE FORM

APPENDIX L .....CONTRACTORS CERTIFICATION FORM

APPENDIX M .....NYSDEC PERMIT FOR OUTFALL ABANDONMENT

1. INTRODUCTION

The existing Town of New Windsor Wastewater Treatment Plant (WWTP) is located at 145 Caesars Lane, New Windsor, New York. An expansion project for the plant is proposed to increase the permitted wastewater rate from 5 million gallons per day (MGD) to 8 MGD. The expansion project will include the demolition of existing buildings and wastewater treatment equipment and the construction of new buildings, wastewater treatment equipment and site roads. The demolition of the existing outfall and the construction of a new outfall to the Moodna River will also be constructed. A site plan for the proposed project is presented in Appendix A as Figure 1.

This Stormwater Pollution Prevention Plan (SWPPP) has been prepared by MHE Engineering, to address both Phase 1 and Phase 2 of the construction activities at the Town of New Windsor Caesars Lane Wastewater Treatment Plant. The intention of this report is to show compliance with the requirements with the NYSDEC stormwater regulations for construction as presented in the General permit number GP-0-20-001. The general permit is presented in Appendix B. This project is considered a redevelopment project with respect to the NYSDEC stormwater regulations. The proposed redevelopment and associated stormwater management features have been incorporated into the site design with the overall objective to address water quality volume requirements, runoff reduction requirements, stormwater quantity requirements and erosion and sediment control requirements.

NYSDEC Permit GP-0-20-001 is a NYSDEC General Permit that covers stormwater from construction activity for a 5 year period. The 5 year period for GP-0-20-001 expired January 28, 2025. However permit coverage was continued for this project by submitting the "Request to Continue Coverage (RCC)'' GP-0-25-001 which is presented in Appendix B.

2. GENERAL SITE INFORMATION

The Town owns three parcels of land which make up the WWTP Site and total 45.1 acres in size. The Site is bordered to the South by the Moodna Creek, the West by a residential area, the North by Caesars Lane, and to the East by a tributary to the Moodna and industrial uses. The Waste Water Treatment plant improvements are proposed in two phases as follows:

2.1. Phase 1 Scope of Work

The construction activities included in Phase 1 consist of the following:

- Construction of the new Control Building and parking lot.
- Construction of a retaining wall behind the new Control Building.

- Construction of a bypass swale and a stormwater basin. The basin will be used as a sediment basin during Phase 1 and will be converted into bio basin 1 during Phase 2. (Phase 1 does not include construction of the underdrain, planting soil, or plantings of the future Bio-basin #1).
- Construction of some site improvements at the existing Control Building.

Phase 1 will require the use of erosion and sediment controls measures during construction. Permanent stormwater management features including three bio basins and proprietary stormwater management devices will be installed during Phase 2. Site plans for Phase 1 are shown on Figures 8, 9 and 10 in Appendix A.

2.2 Phase 2 Scope of Work

The construction activities included in Phase 2 consist of the following:

- Construction of multiple wastewater treatment process buildings and process interconnections.
- Construction of retaining wall and stormwater bypass swales.
- Construction of additional parking lots and site roadways.
- Construction of a new maintenance Garage.
- Abandonment of outfall stormwater piping (Refer to Appendix A for extent of piping).
- The construction of a new outfall
- Construction of permanent stormwater features including three Bio Retention basins and proprietary treatment equipment installation.

Site plan for Phase 2 is shown on Figure 1 of Appendix A.

2.3 Topography and Soils

In general, the site slopes from North to South towards the Moodna Creek. The site contains areas identified as being within the FEMA 100-year flood plain. The flood elevation varies from 11 to 12 feet within the project area.

Existing soils data was gathered utilizing the United States Department of Agriculture (USDA) Natural Resources Conservation Service (NRCS) - Web Soil Survey (WSS) online application. The Soil Survey for Orange County, New York shows that the project area consists of A and D type soils primarily including MdB (Mardin, Gravelly silt loam, 3 to 8 % slopes, Hydrologic Soil Group D), HoD (Hoosic gravelly sand loam, 15 to 25% slopes, Hydrologic Soil Group A), and OVE (Otisville and Hoosic Soils, steep, Hydrologic Soil Group A). The web soil survey output is included for reference as Appendix ‘C’.

2.4 Wetlands, Existing Outfall Demolition and Environmental Resources

There are no wetlands on the project site in the vicinity of the existing wastewater treatment plant or the proposed expansion area.

However, as part of the existing outfall abandonment activities included in the Phase 2 construction, NYSDEC wetlands, will be disturbed. The abandonment of the outfall stormwater piping involves the removal of manhole grates and concrete risers as well as a section of the outfall piping. The areas where abandonment and removal take place will be backfilled and restored with topsoil to grade and seeded to achieve stabilization. Associated permits granted by the NYSDEC have been included in Appendix M for the work within wetlands and stream crossings. The plans are presented on Figure 5 and 6 in Appendix A.

The project site is located in a New York State Department of State (NYSDOS) Coastal Resource area. The project must comply with NYS Department of State requirements involving coastal consistency determination.

The project site borders the Moodna Creek to the south, a Class C stream in accordance with the NYSDEC. The project site also borders a tributary to the Moodna on the east side of the project site, which is also a Class C stream. Permits for work within the bed or banks of a Class C stream are not required from New York State. The project site has proposed discharges to both the Moodna and the tributary.

2.5 Archaeology and Historic Preservation

A site specific web-based review conducted using the New York State Department of Environmental Conservation (NYSDEC) Environmental Resource Mapper (ERM) was utilized to determine the potential impact on archeological sites within the limits of disturbance. The Environmental Assessment Form (EAF) summary report provided by the ERM interactive mapping application indicated that the proposed actions would potentially impact archeological sites in vicinity of the project area. Therefore, the New York State Historic Preservation Office (SHPO) was contacted by our office. The letter received from SHPO is included in Appendix D and determined no impacts would be made to archeological sites.

3. STORMWATER ASSESSMENT AND METHODOLOGY

3.1 Permit Requirements

A stormwater assessment was performed in accordance with NYSDEC General Permit No. GP-0-20-001. A copy of the general permit is provided as Appendix B. Since GP-0-20-001 expired on January 28, 2025, permit coverage was extended for the project by submitting a “Request to Continue Coverage (RCC)” which is also presented in Appendix B.

The project has been designed with the following stormwater management objectives:

- Provide sufficient water quality and runoff reduction volume treatment practices to meet performance criteria as outlined in the 2024 NYS Stormwater Management Design Manual.
- Address Channel Protection Volume
- Address quantity control for site
- Select appropriate temporary and permanent erosion and sedimentation control measures.

3.2 Rainfall

The precipitation values for the 1-year, 10-year and 100-year, 24-hour storms for the Town of New Windsor, Orange County, New York were obtained from the Extreme Precipitation Database created by the Cornell University (refer to Appendix E). The rainfall amounts for the project area used in design areas are as follows: 1-year design storm is 2.6 inches, 10-year design storm is 4.75 inches and 100-year design storm is 8.49 inches.

3.3 Design Process

In order to fulfill the objectives listed above, the NYSDEC five-step process approach was utilized as follows:

Step 1 *– Site Planning to Preserve Natural Features and Reduce Impervious Cover*

Site planning was conducted for the project area with the intention of limiting clearing and grading and subsequent redevelopment of impervious areas by providing the minimum amount of road, driveway, foundation, utilities and stormwater management facilities needed to successfully capture and treat stormwater runoff. Goals for protection of natural features include consideration of environmentally sensitive areas including the Moodna Creek.

Step 2 *– Calculation of Water Quality Volume (WQv)*

This project is a redevelopment project with an increase in impervious surface. In accordance with the NYSDEC Stormwater Design Manual, this redevelopment project requires that 25% of the WQv from the existing impervious surface and 100% of the new additional impervious surface of the WQv to be treated. The NYSDEC Worksheets (2024 GI worksheets) were utilized to determine the WQv for each area based on the area of impervious cover, hydrologic soil groups located on-Site, and a 90% rainfall event of 1.4 inches.

Step 3 *– Incorporation of Runoff Reduction Techniques and Standard Stormwater Management Practices (SMPs) with Runoff Reduction (RRv) Capacity*

The required runoff reduction volume (RRv) was calculated for the proposed site conditions using the NYSDEC Worksheets.

Step 4 *– Use of Standard SMPs, Where Applicable, to Treat the Portion of WQv Not Addressed by Runoff Reduction Techniques and Standard SMPs with RRv Capacity.*

Three bio-retention basins were designed to provide water quality volume and runoff reduction volume.

Step 5 *– Design of Volume and Peak Rate Control Practices Where Required*

Peak rate was addressed by downstream analysis.

3.4 Planning for Green Infrastructure

In accordance with Section 5 - Green Infrastructure Practices of the NYS Stormwater Management Design Manual, the proposed project has been designed to incorporate recommended planning practices in the following manner:

Planning Practices for Preservation of Natural Features and Conservation	
Practice	Description
Preservation of Undisturbed Areas	Site disturbance was minimized and the preservation of vegetation along the Moodna will be maintained.
Reduction of Clearing and Grading	Clearing limits and grading were minimized to the extent practical.
Locating Development in Less Sensitive Areas	The majority of the redevelopment will take place in already developed areas.
Open Space Design	Gravel roads and surfaces were utilized in many areas instead of asphalt pavement.
Soil Restoration	Soil restoration technologies will be utilized during construction.

3.5 Water Quality Volume

The Water Quality Volume (WQv) was designed in accordance with the 2015 NYS Stormwater Management Design Manual for a redevelopment site with more impervious surface in the proposed condition than the existing condition. The WQv requirements for this redevelopment design include providing 25% of the required WQv for the existing impervious surface and 100% of the WQv for the additional impervious surface. See Figure 2 in Appendix A for the existing impervious surface. See Figure 3 in Appendix A for the impervious surface in the proposed condition.

The WQv calculation utilizes the ninety percent (90%) storm also referred to as the water quality volume storm. The following figure (Figure 4.1 of NYS Stormwater Management Design Manual) was utilized to determine the precipitation for the 90th percentile rainfall event. A precipitation (P) of 1.4-inch was used for the water quality volume calculations for the project site.

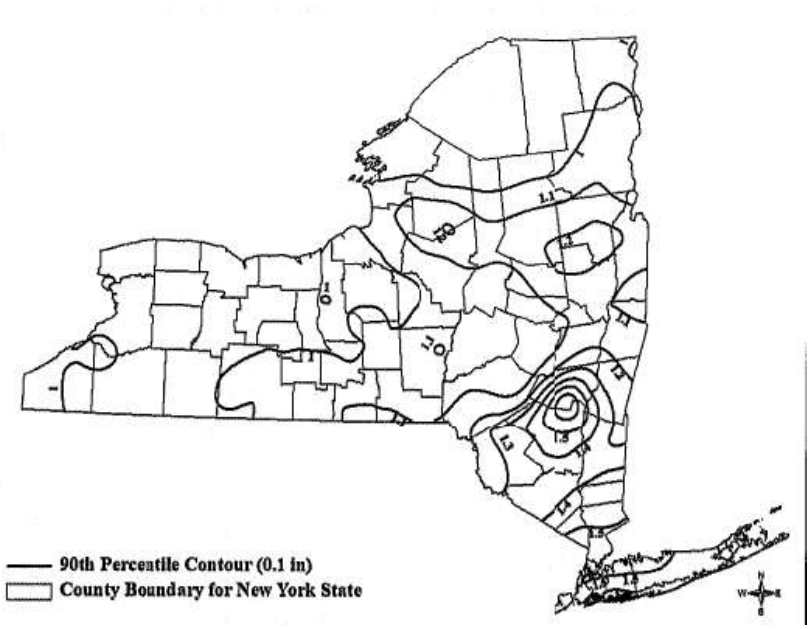

To calculate the WQv, the following formula was used:

$$WQv = \frac{P \times R_v \times A}{12}$$

Where:
WQv = Water Quality Volume (in acre-feet)
P= 90% Rainfall Event Number (1.4")
Rv = 0.05 + 0.009(I), where I is Percent Impervious Cover
A = Site Area in Acres (Contributing Area)

The WQv calculations for this redevelopment design are presented in Appendix F.

3.6 Runoff Reduction Volume

The NYSDEC stormwater regulations intend for the project design to include Runoff Reduction Volume (RRv) techniques to reduce the entire WQv by the application of green infrastructure features. Since this is a redevelopment project, it should be noted that RRv is not required for the existing conditions impervious surface. However, 100% of the RRv is required for the additional impervious surface. Runoff reduction is an attempt to replicate pre-development hydrology through infiltration, groundwater recharge, reuse, recycle or evaporation. This requirement can be obtained by the application of on-site green infrastructure techniques and standard stormwater management practices that also have runoff reduction capacity. The proposed Bio-basins used in the design provide the original RRv for the project site.

If the entire WQv cannot be addressed by RRv techniques, the minimum RRv volume must be provided in the design. The required minimum runoff reduction volume was calculated in accordance with the NYSDEC requirements for the project area. WQv and RRv calculations are included in Appendix F.

To calculate the minimum RRv, the following formula was used:

$$RRv_{min} = \frac{P \times R_v \times Aic * S}{12}$$

Where,
P=1.4 Inches
Rv = 0.05 + 0.009(I), where I is Percent Impervious Cover (100%)
Aic=1.5 Acres (Total area of new Impervious surface)
S=Hydrologic Soil Group Value (D soils =0.20)

A summary of the WQv required, WQv provided, minimum RRv required, and RRv provided are shown in the table below:

	Existing Impervious Area	Proposed Additional Impervious Area	Total
WQv Required	3,326.00 Ft^3	7,814.00 Ft^3	11,139.00 Ft^3
WQv Provided	-	-	15,809 Ft^3
Minimum RRv Required	N/A	1,323 Ft^3	1,323 Ft^3
RRv Provided	-	2,296 Ft^3	2,296 Ft^3

The RRv provided by the biobasins exceed the minimum required RRv. Therefore, all NYSDEC requirements for WQv and RRv have been met.

3.6.1 Bypass Swales

To reduce the total volume of water which must be treated, three bypass swales are proposed to capture water before it reaches the developed portion of the Site. Each bypass swale carries water to a pipe which discharges the water to either the Moodna or adjacent stream along the eastern boundary of the Site. These bypass swales can be found in the HydroCad model included as Appendix G and on the site plans.

3.7 Post Construction Stormwater Management Practices

3.7.1 Bioretention Basins

Multiple practices were considered when selecting post stormwater management for the Site. Ultimately, due to site-specific limitations, including topography and proximity to the Moodna Creek, the use of filtering bio-retention basins were selected for the project. Three bio-basins were used in the design. All three bio-retention basins were designed in accordance with Section 6.4 (Stormwater Filtering Systems) of the 2024 NYS Stormwater Management Design Manual.

The soil media filters in each bio-basin were designed with a thickness of 2.5-feet with a soil permeability rate of 1ft/day in accordance with recommendation of the 2024 NYSDEC design manual.

In general, each of the basins were designed with an orifice 6'' above the basin and with a horizontal grate to pass higher flows. The bio-retention basins are shown on the project plans provided in Appendix A, Figure 1 and modeled in HydroCAD presented in Appendix G.

3.7.2 Proprietary Devices

To work within the limited amount of space and meet the redevelopment WQv requirement, four proprietary devices are proposed to be installed to treat the existing impervious areas. The ADS Barracuda is proposed at all locations. The ADS Barracuda Max is a hydrodynamic separator which removes total suspended solids and can handle high flowrates. The ADS Barracuda Max meets the NYDEP 50% removal, which is acceptable to the NYSDEC for redevelopment projects. Product information for the ADS Barracuda can be found in Appendix H. These devices were sized based on flowrates generated during the water quality volume design storms and are shown on the proposed drainage area figures included in Appendix F.

3.8 Channel Protection Volume

The need for Channel Protection Volume was evaluated at the site. In accordance with the 2024 NYSDEC Stormwater Design Manual, sites that directly discharge to tidal waters are exempt from the requirement of Channel Protection Volume. Since the Moodna is tidal at the project site, Channel Protection Volume is not required.

3.9 Overbank and Extreme Flood (10 yr and 100 yr Storms)

The project site is directly adjacent to the Moodna River and within a mile of its discharge point into the Hudson River. The Moodna River has a drainage area of 170 square miles at the project site. Due to the site's proximity to the Moodna, "downstream analysis" was utilized to address the quantity requirements for the 10 year and 100 year storm events. Downstream analysis allows a 5% increase in peak flow as long as downstream structures are not affected.

The USGS Stream Stats program was utilized to develop flows in the Moodna River at the project site (refer to Appendix I for Stream Stats results). As shown in the Stream Stats program, the 10-year peak rate in the Moodna at the project site is 6,200 cfs. The 100-year peak rate flow in the Moodna as obtained from Stream Stats is 11,700 cfs. In consideration of the nominal increases from the project areas which will occur much sooner than the peak rate in the Moodna, the site quantity control requirements have been met. The stream stats information is presented in Appendix I.

4. EROSION AND SEDIMENTATION CONTROL

4.1 Erosion and Sedimentation Control Practices

Erosion and sediment control measures will be implemented during construction to minimize soil erosion and control offsite transport of sediment laden runoff during construction. The Erosion and Sediment Control Plans, included in the separately bound project plan set, have been designed in accordance with the NYSDEC requirements. However, the contractor, sub-contractors and operators need to be proactive in addressing erosion and sediment control issues as they arise during construction. The actual construction activities, timing, sequencing, rainfall events and weather conditions all affect erosion and sediment control issues and are beyond the control of the designer. The contractor, sub-contractors, and operators shall implement additional measures as necessary to mitigate erosion and sediment control issues if they arise.

If assistance is required with the implementation of additional erosion control measures, contact the designer immediately. The following erosion and sedimentation (E&S) control practices were selected for the project.

Construction Entrance

Construction entrances will be constructed and stabilized prior to any earth moving being initiated on site. The entrance shall consist of AASHTO #1 rock compacted to a minimum depth of eight inches (8”) placed on non-woven geo-textile fabric. A construction entrance detail is provided for reference on the Erosion and Sedimentation Control plan. The construction entrance is to be maintained until the site is stabilized.

Compost Filter Sock

Subsequent to the installation of construction entrance(s), compost filter socks are to be installed as shown on the Erosion and Sedimentation Control plans to mitigate sediment from being transported off-site. Additional compost filter socks are to be installed around the topsoil stockpile and other areas as shown on the Erosion and Sedimentation Control plans. Filter socks specifications shall be in accordance with Table 5.1 of the NYS Standards and Specifications for Erosion and Sediment Control manual (November 2016) or an acceptable equal. All filter socks shall remain in place and be maintained for the duration of the project.

Stockpile

Stockpiles will be developed in the locations indicated on the E & S Control Plan. Stockpiles are to be protected by utilizing compost filter socks around the proposed pile in order to mitigate the potential of sediment migration downstream.

Temporary Surface Stabilization

Areas that may be disturbed multiple times during construction are to be temporarily stabilized through the use of temporary mulch and/or seed application as directed by the Engineer. Areas remaining destabilized for a period greater than five (5) days during construction operation shall be

temporarily stabilized or as directed by the Engineer. Temporary mulch and seed shall meet the requirements of the provided specifications.

Steep Slope Stabilization

Jute matting is to be installed on steep slopes as shown on the Erosion and Sedimentation Control plan and other areas as needed to enhance soil stabilization. Jute matting is to be installed parallel with direction of flow and in accordance with the manufacturer's recommendation.

Permanent Surface Stabilization

All areas will be stabilized by seeding, fertilizing and mulching in order to achieve permanent surface stabilization. This stabilization shall be executed as specified in the sequence of construction. Seeding, fertilizing and mulching should be performed in accordance with the specifications provided on the Erosion and Sedimentation Control plan. Temporary seeding shall be utilized in the event that site grading operations are interrupted due to weather or other site conditions.

Dust Control

Airborne dust resulting from construction activities shall be monitored and minimized by utilizing a water truck on site in order to suppress dust from becoming airborne if and when necessary. Frequency of water placement for dust suppression shall be determined based on current site conditions and weather.

5. OPERATION AND MAINTENANCE

All of the biobasins, catch basins, and vegetated swales will be maintained in accordance with the NYSDEC SMP Management (2017) Guidance document. This includes general housekeeping, landscaping and clearing of overgrowth, and maintenance of the filter media and outlet structures. This is to prevent clogging, erosion, and other issues which render the stormwater management practices less effective over time. The ADS Barracuda units shall be maintained as recommended by the manufacturer. Inspection requirements and O&M requirements are presented in Appendix J.

6. NOI, MS4, AND CONTRACTORS CERTIFICATION

A completed Notice of Intent (NOI) and MS4 acceptance forms are included in Appendix K. The NOI and MS4 acceptance forms must be submitted to the NYSDEC prior to earth disturbance activities. The submission to the NYSDEC is required a minimum of 5 days prior to earth disturbance if it is filed electronically, or a minimum of 10 days prior if a paper copy is mailed to the NYSDEC. A copy of the NOI, NOI acknowledgment letter, MS4 acceptance form, SWPPP, and inspection reports must be kept onsite during construction until all disturbed areas have achieved final stabilization and a Notice of Termination (NOT) have been submitted to the NYSDEC. Additionally, each contractor and all subcontractors for the project shall prepare and sign a copy of the Contractor's Certification Statement presented in Appendix L.

7. CONCLUSION

The project has been designed in accordance with the requirements of the NYSDEC GP-0-20-001 which expired January 2025. However, the stormwater coverage was continued beyond the January 2025 General Permit expiration date by submitting the request to continue coverage. The site includes stormwater management features to meet the water quality, runoff reduction and meets the quantity control requirements. Additionally, the project includes erosion and sediment control measures to be implemented during construction and addresses post construction maintenance.

Appendix A

PROJECT SITE PLANS

Figure 1 Overall Project Site Plan (Phase 2)

Figure 2 Existing Conditions Impervious Area Plan

Figure 3 Proposed Conditions Impervious Area Plan

Figure 4 Proposed Drainage Area Study Map

Figure 5 Existing Plant Outfall System Map

Figure 6 Existing Outfall Abandonment Plan and Details

Figure 7 Phase 1 Overall Site Plan

Figure 8 Phase 1 New Control Building Site Plan (Sheet 1 of 2)

Figure 9 Phase 1 New Control Building Plan (Sheet 2 of 2)

Figure 10 Phase 1 Existing Control Building (Sheet 2 of 2)

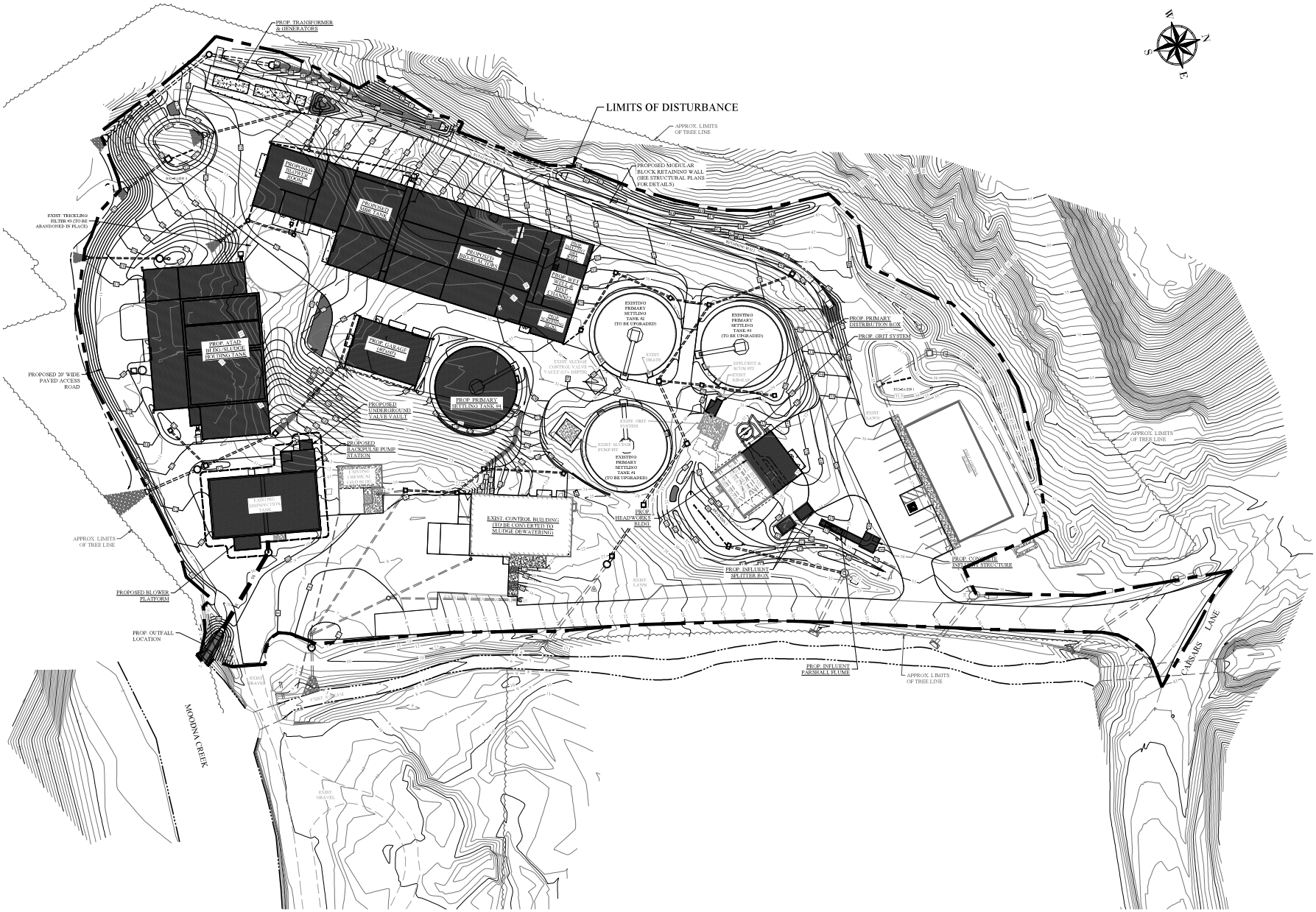

MHE ENGINEERING

33 Airport Center Drive, Suite 202
New Windsor, NY 12553
(845) 567-3100

111 Wheatfield Drive, Suite 1
Milford, PA 18337
(570) 296-7765

HAZARDOUS MATERIAL NOTE:

THE SERVICES PROVIDED BY MHE, INCLUDING ALL WORK DEPICTED ON MHE PLANS, DO NOT INCLUDE SERVICES RELATED TO THE IDENTIFICATION, CONTROLS OR HANDLING OF HAZARDOUS MATERIALS, INCLUDING SUCH MATERIALS AS ASBESTOS AND LEAD PAINT. ALL TESTING, IDENTIFICATION, ABATEMENT, CONTROLS, AND HANDLING OF HAZARDOUS MATERIALS SHALL BE UNDERTAKEN BY A HAZARDOUS MATERIAL CONSULTANT AND CERTIFIED PROFESSIONALS. IF SUCH MATERIALS HAVE BEEN IDENTIFIED, CONTRACTOR WILL COMMUNICATE DIRECTLY WITH HAZARDOUS MATERIAL PROFESSIONAL FOR THE PERFORMANCE OF ANY WORK ON OR ADJACENT TO SAID MATERIALS. IF UNIDENTIFIED MATERIALS OF CONCERN ARE ENCOUNTERED WHILE UNDERTAKING THE WORK SHOWN HEREON, CONTRACTOR SHALL IMMEDIATELY NOTIFY ENGINEER AND OWNER, AND SHALL OBTAIN DIRECTION FROM THE HAZARDOUS MATERIAL CONSULTANT PRIOR TO THE CONTINUATION OF WORK INVOLVING SUSPECTED MATERIAL.

UDIG·NY
SAFE DIGGING STARTS HERE
CALL 811

UNAUTHORIZED ADDITION OR ALTERATION OF THIS PLAN IS A VIOLATION OF SECTION 7209(2) OF THE NEW YORK STATE EDUCATION LAW.

ALL PRODUCTION & INTELLECTUAL PROPERTY RIGHT RESERVED ©

CAESARS LANE WWTP EXPANSION PROJECT: PHASE 2

145 CAESARS LN.
NEW WINDSOR, NY 12553

FOR TOWN OF NEW WINDSOR
555 UNION AVE.
NEW WINDSOR, NY 12553

PROPOSED SITE PLAN FIGURE 1

REVISIONS

NO	DESCRIPTION	DATE

ISSUED DATE:	18 APR. 2025
DESIGN BY:	MJS
DRAWN BY:	HPRS
CHECKED BY:	MJS, JZ
REVIEWED BY:	**MJS, JZ**

SHEET NO.

FIG-1

PROJECT # 18-272 PHASE #

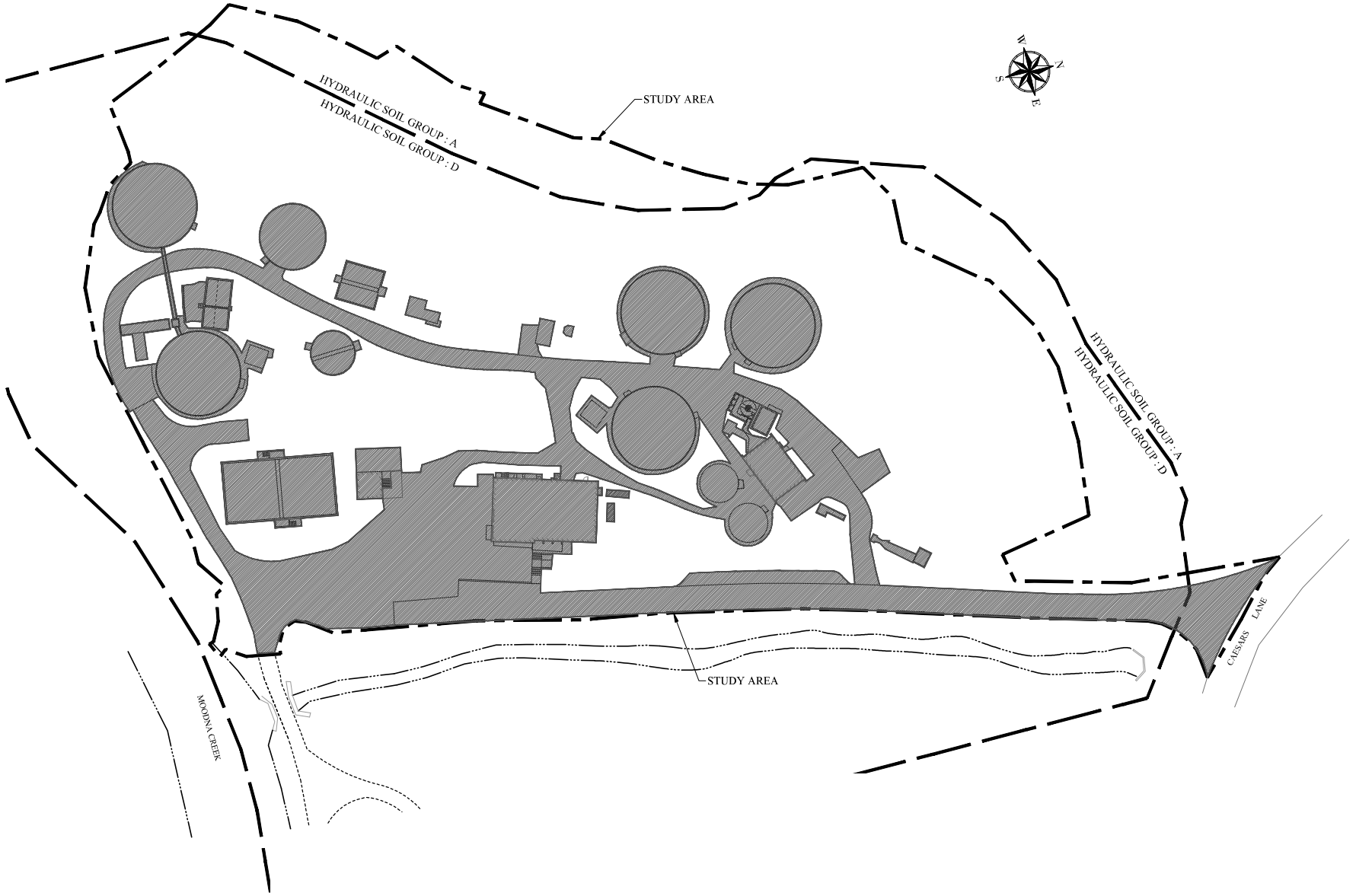

MHE ENGINEERING
33 Airport Center Drive, Suite 202
New Windsor, NY 12553
(845) 567-3100
111 Wheatfield Drive, Suite 1
Milford, PA 18337
(570) 296-7765

HAZARDOUS MATERIAL NOTE:
THE SERVICES PROVIDED BY MHE, INCLUDING ALL WORK DEPICTED ON MHE PLANS, DO NOT INCLUDE SERVICES RELATED TO THE IDENTIFICATION, CONTROLS OR HANDLING OF HAZARDOUS MATERIALS, INCLUDING SUCH MATERIALS AS ASBESTOS AND LEAD PAINT. ALL TESTING, IDENTIFICATION, ABATEMENT, CONTROLS, AND HANDLING OF HAZARDOUS MATERIALS SHALL BE UNDERTAKEN BY A HAZARDOUS MATERIAL CONSULTANT AND CERTIFIED PROFESSIONALS. IF SUCH MATERIALS HAVE BEEN IDENTIFIED, CONTRACTOR WILL COMMUNICATE DIRECTLY WITH HAZARDOUS MATERIAL PROFESSIONAL FOR THE PERFORMANCE OF ANY WORK ON OR ADJACENT TO SAID MATERIALS. IF UNIDENTIFIED MATERIALS OF CONCERN ARE ENCOUNTERED WHILE UNDERTAKING THE WORK SHOWN HEREON, CONTRACTOR SHALL IMMEDIATELY NOTIFY ENGINEER AND OWNER, AND SHALL OBTAIN DIRECTION FROM THE HAZARDOUS MATERIAL CONSULTANT PRIOR TO THE CONTINUATION OF WORK INVOLVING SUSPECTED MATERIAL.

UDIG·NY SAFE DIGGING STARTS HERE
CALL 811

UNAUTHORIZED ADDITION OR ALTERATION OF THIS PLAN IS A VIOLATION OF SECTION 7209(2) OF THE NEW YORK STATE EDUCATION LAW.

ALL PRODUCTION & INTELLECTUAL PROPERTY RIGHT RESERVED ©

CAESARS LANE WWTP EXPANSION PROJECT: PHASE 2
145 CAESARS LN.
NEW WINDSOR, NY 12553
FOR TOWN OF NEW WINDSOR
555 UNION AVE.
NEW WINDSOR, NY 12553

EXISTING CONDITIONS IMPERVIOUS AREA FIGURE 2

REVISIONS

NO	DESCRIPTION	DATE

ISSUED DATE:	18 APR, 2025
DESIGN BY:	MJS
DRAWN BY:	HPRS
CHECKED BY:	MJS, JZ
REVIEWED BY:	**MJS, JZ**

SHEET NO.

FIG-2

PROJECT # 18-272 PHASE #

F:\2018\18-732 Caesar Lane WWTP Improvements\Expansion Phase\Drafting\1 - Site Work & Outfall\SWPPP FIGURES 1-2-3-4.dwg, FIG-3, 4/11/2025 4:19:32 PM

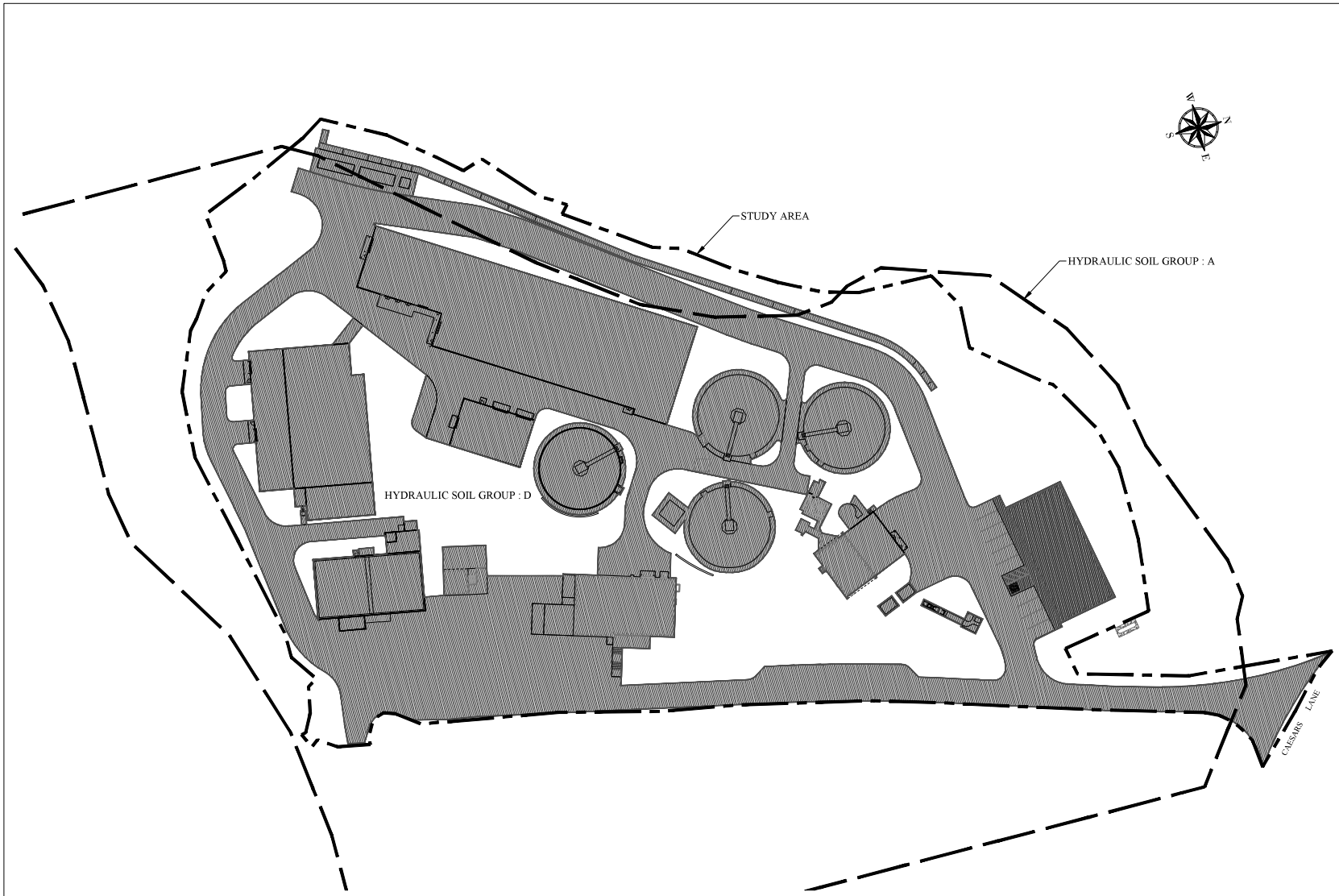

MHE ENGINEERING
33 Airport Center Drive, Suite 202
New Windsor, NY 12553
(845) 567-3100
111 Wheatfield Drive, Suite 1
Milford, PA 18337
(570) 296-2765

HAZARDOUS MATERIAL NOTE:
THE SERVICES PROVIDED BY MHE, INCLUDING ALL WORK DEPICTED ON MHE PLANS, DO NOT INCLUDE SERVICES RELATED TO THE IDENTIFICATION, CONTROLS OR HANDLING OF HAZARDOUS MATERIALS, INCLUDING SUCH MATERIALS AS ASBESTOS AND LEAD PAINT. ALL TESTING, IDENTIFICATION, ABATEMENT, CONTROLS, AND HANDLING OF HAZARDOUS MATERIALS SHALL BE UNDERTAKEN BY A HAZARDOUS MATERIAL CONSULTANT AND CERTIFIED PROFESSIONALS. IF SUCH MATERIALS HAVE BEEN IDENTIFIED, CONTRACTOR WILL COMMUNICATE DIRECTLY WITH HAZARDOUS MATERIAL PROFESSIONAL FOR THE PERFORMANCE OF ANY WORK ON OR ADJACENT TO SAID MATERIALS. IF UNIDENTIFIED MATERIALS OF CONCERN ARE ENCOUNTERED WHILE UNDERTAKING THE WORK SHOWN HEREON, CONTRACTOR SHALL IMMEDIATELY NOTIFY ENGINEER AND OWNER, AND SHALL OBTAIN DIRECTION FROM THE HAZARDOUS MATERIAL CONSULTANT PRIOR TO THE CONTINUATION OF WORK INVOLVING SUSPECTED MATERIAL.

UDIG-NY CALL 811

UNAUTHORIZED ADDITION OR ALTERATION OF THIS PLAN IS A VIOLATION OF SECTION 7209(2) OF THE NEW YORK STATE EDUCATION LAW.

ALL PRODUCTION & INTELLECTUAL PROPERTY RIGHT RESERVED ©

CAESARS LANE WWTP EXPANSION PROJECT: PHASE 2
145 CAESARS LN.
NEW WINDSOR, NY 12553
FOR TOWN OF NEW WINDSOR
555 UNION AVE.
NEW WINDSOR, NY 12553

PROPOSED CONDITIONS IMPERVIOUS AREA FIGURE 3

REVISIONS

NO.	DESCRIPTION	DATE

ISSUED DATE:	10 APR, 2025
DESIGN BY:	MJS
DRAWN BY:	HPB/8
CHECKED BY:	MJS, JZ
REVIEWED BY:	MJS, JZ

SHEET NO.
FIG-3

PROJECT # 18-732 PHASE #

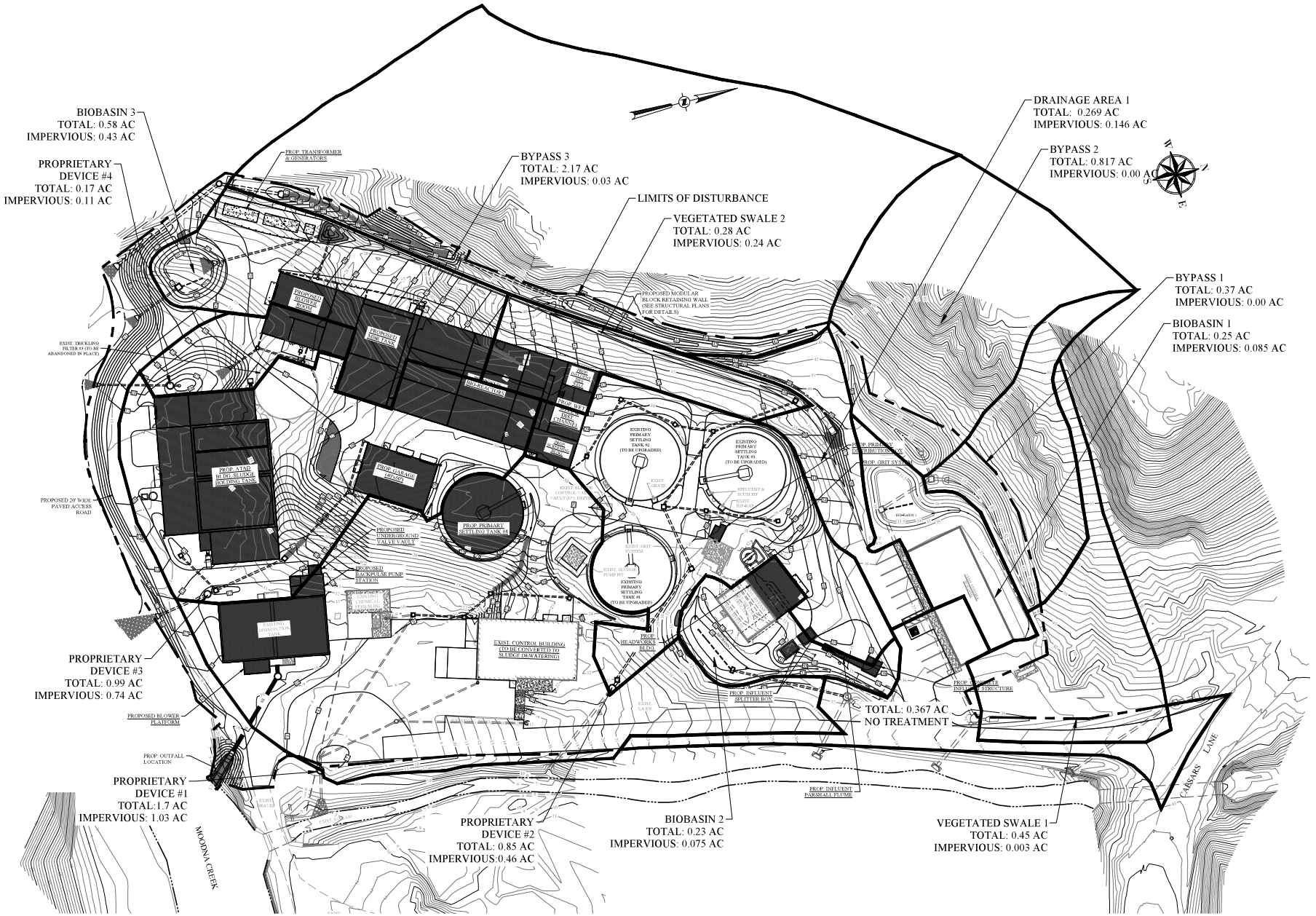

MHE ENGINEERING
33 Airport Center Drive, Suite 202
New Windsor, NY 12553
(845) 567-3100
111 Wheatfield Drive, Suite 1
Milford, PA 18337
(570) 296-7765

HAZARDOUS MATERIAL NOTE:
THE SERVICES PROVIDED BY MHE, INCLUDING ALL WORK DEPICTED ON MHE PLANS, DO NOT INCLUDE SERVICES RELATED TO THE IDENTIFICATION, CONTROLS OR HANDLING OF HAZARDOUS MATERIALS, INCLUDING SUCH MATERIALS AS ASBESTOS AND LEAD PAINT. ALL TESTING, IDENTIFICATION, ABATEMENT, CONTROLS, AND HANDLING OF HAZARDOUS MATERIALS SHALL BE UNDERTAKEN BY A HAZARDOUS MATERIAL CONSULTANT AND CERTIFIED PROFESSIONALS. IF SUCH MATERIALS HAVE BEEN IDENTIFIED, CONTRACTOR WILL COMMUNICATE DIRECTLY WITH HAZARDOUS MATERIAL PROFESSIONAL FOR THE PERFORMANCE OF ANY WORK ON OR ADJACENT TO SAID MATERIALS. IF UNIDENTIFIED MATERIALS OF CONCERN ARE ENCOUNTERED WHILE UNDERTAKING THE WORK SHOWN HEREON, CONTRACTOR SHALL IMMEDIATELY NOTIFY ENGINEER AND OWNER, AND SHALL OBTAIN DIRECTION FROM THE HAZARDOUS MATERIAL CONSULTANT PRIOR TO THE CONTINUATION OF WORK INVOLVING SUSPECTED MATERIAL.

UDIG·NY SAFE DIGGING STARTS HERE
CALL 811

UNAUTHORIZED ADDITION OR ALTERATION OF THIS PLAN IS A VIOLATION OF SECTION 7209(2) OF THE NEW YORK STATE EDUCATION LAW.

ALL PRODUCTION & INTELLECTUAL PROPERTY RIGHT RESERVED ©

CAESARS LANE WWTP EXPANSION PROJECT: PHASE 2
145 CAESARS LN.
NEW WINDSOR, NY 12553
FOR TOWN OF NEW WINDSOR
555 UNION AVE.
NEW WINDSOR, NY 12553

PROPOSED SITE PLAN
FIGURE 1

REVISIONS

NO	DESCRIPTION	DATE

ISSUED DATE:	18 APR. 2025
DESIGN BY:	MJS
DRAWN BY:	HPRS
CHECKED BY:	MJS, JZ
REVIEWED BY:	**MJS, JZ**

SHEET NO.

FIG-4

PROJECT # 18-272 PHASE #



GRAPHIC SCALE

100 0 50 100 200 400

1 inch = 100 feet

1 / FIG-5 EXISTING PLANT OUTFALL SYSTEM MAP

SCALE: 1" = 100'

MHE ENGINEERING

33 Airport Center Drive, Suite 202
New Windsor, NY 12553
(845) 567-3100

111 Wheatfield Drive, Suite 1
Milford, PA 18337
(570) 296-2765

HAZARDOUS MATERIAL NOTE:

THE SERVICES PROVIDED BY MHE, INCLUDING ALL WORK DEPICTED ON MHE PLANS, DO NOT INCLUDE SERVICES RELATED TO THE IDENTIFICATION, CONTROLS OR HANDLING OF HAZARDOUS MATERIALS, INCLUDING SUCH MATERIALS AS ASBESTOS AND LEAD PAINT. ALL TESTING, IDENTIFICATION, ABATEMENT, CONTROLS, AND HANDLING OF HAZARDOUS MATERIALS SHALL BE UNDERTAKEN BY A HAZARDOUS MATERIAL CONSULTANT AND CERTIFIED PROFESSIONALS. IF SUCH MATERIALS HAVE BEEN IDENTIFIED, CONTRACTOR WILL COMMUNICATE DIRECTLY WITH HAZARDOUS MATERIAL PROFESSIONAL FOR THE PERFORMANCE OF ANY WORK ON OR ADJACENT TO SAID MATERIALS. IF UNIDENTIFIED MATERIALS OF CONCERN ARE ENCOUNTERED WHILE UNDERTAKING THE WORK SHOWN HEREON, CONTRACTOR SHALL IMMEDIATELY NOTIFY ENGINEER AND OWNER, AND SHALL OBTAIN DIRECTION FROM THE HAZARDOUS MATERIAL CONSULTANT PRIOR TO THE CONTINUATION OF WORK INVOLVING SUSPECTED MATERIAL.

UDIG·NY SAFE DIGGING STARTS HERE

CALL 811

UNAUTHORIZED ADDITION OR ALTERATION OF THIS PLAN IS A VIOLATION OF SECTION 7209(2) OF THE NEW YORK STATE EDUCATION LAW.

ALL PRODUCTION & INTELLECTUAL PROPERTY RIGHT RESERVED ©

CAESARS LANE WWTP EXPANSION PROJECT: PHASE 2

145 CAESARS LN.
NEW WINDSOR, NY 12553

FOR TOWN OF NEW WINDSOR
555 UNION AVE.
NEW WINDSOR, NY 12553

EXISTING PLANT OUTFALL SYSTEM MAP
FIGURE 5

REVISIONS

NO.	DESCRIPTION	DATE

ISSUED DATE:	18 APR. 2025
DESIGN BY:	QMM
DRAWN BY:	RLJ
CHECKED BY:	MJS
REVIEWED BY:	MJS, JZ

SHEET NO.

FIG-5

PROJECT # 18-272 PHASE #

F:\2018\18-272 Caesars Lane WWTP Improvements\Expansion Phase\Drafting\F-Misc\Fig-5 Exist Plant Outfall System Map.dwg, FIG-5, 4/9/2025 11:55:55 AM

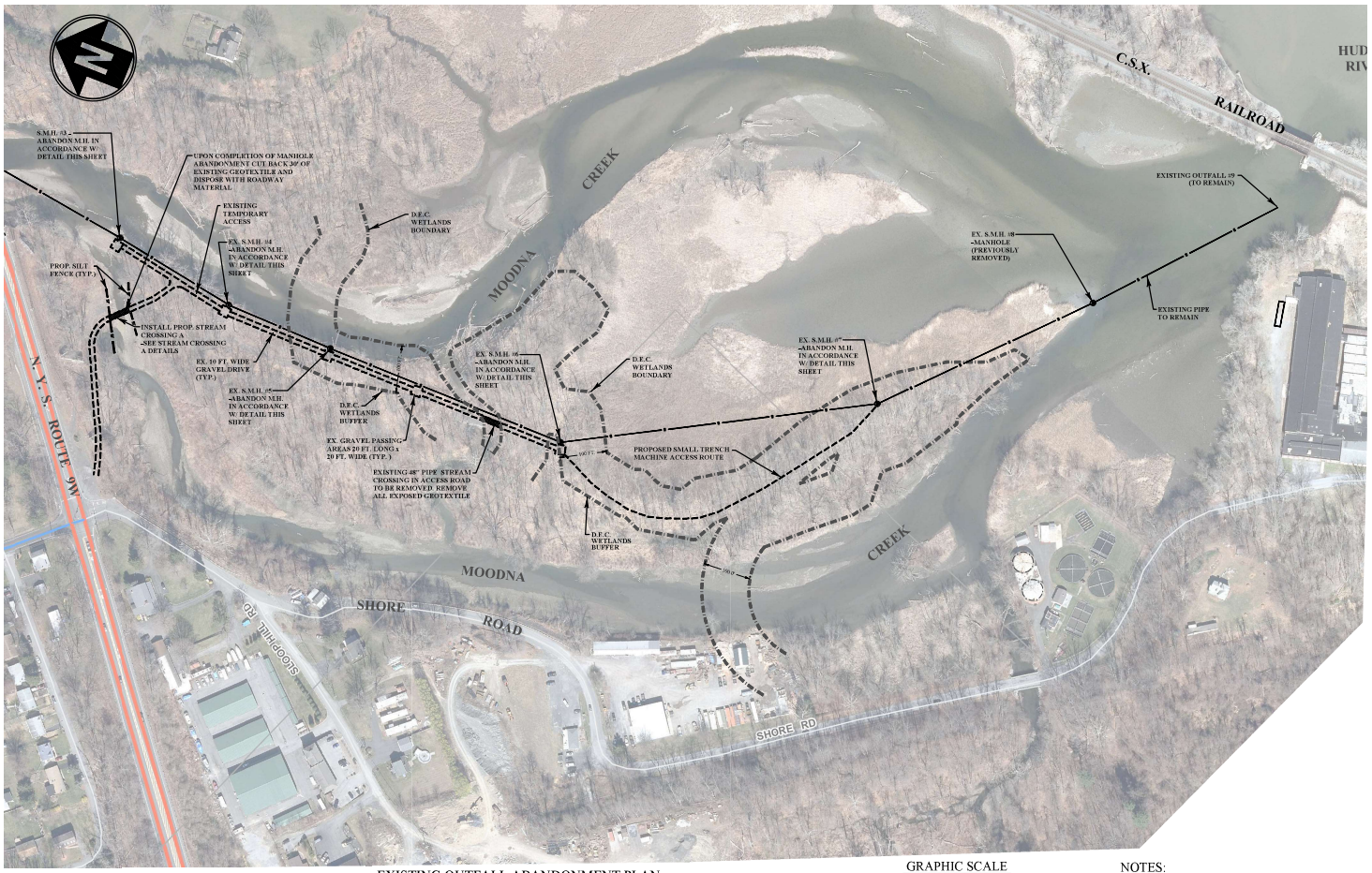

EXISTING OUTFALL ABANDONMENT PLAN

SCALE 1" = 100'

NOTES:

1. N.Y.S.D.E.C. WETLANDS BOUNDARY ESTABLISHED IN FIELD WITH N.Y.S.D.E.C. PERSONNEL (DOUG GAUGLER) ON 26 JUNE 2012 AND CONFIRMED BY EMAIL ON 28 JUNE 2012.
2. ASSUMED N.Y.S.D.E.C. WETLANDS BOUNDARY BASED ON FIELD REVIEW 15 NOVEMBER 2018 WITH N.Y.S.D.E.C. PERSONNEL.
3. EXIST. MANHOLE #7 WILL BE ACCESSED BY SMALL TRENCH MACHINE (KUBOTA SVL95 TRENCHER OR EQUAL) TO MINIMIZE DISTURBANCE TO ADJACENT AREA.
4. WORK WITHIN EXISTING ACCESS ROAD FOR REMOVAL OF EXISTING MANHOLES #3~#6 AND 48" PIPE WILL BE LIMITED TO MEDIUM TRENCHER EXCAVATOR (KOMATSU 138 OR EQUAL) AND SINGLE AXLE DUMP TRUCKS.
5. A TIME OF YEAR RESTRICTION WILL BE IMPLEMENTED FOR ALL OUTFALL ABANDONMENT CONSTRUCTION. THE ALLOWABLE WORK WINDOW WILL BE SEPTEMBER 1 TO APRIL 14.

GRAPHIC SCALE

100 0 50 100 200 400

1 inch = 100 feet

NOTES:

1. CUT BACK ALL GEOTEXTILE MATERIAL 30' MIN. FROM EMBANKMENTS
2. RE-SEED ALL DISTURBED AREAS WITH WETLAND SEED MIXTURE
3. WETLAND SEED MIXTURE AND RESTORATION SHALL BE IN ACCORDANCE WITH NYSDEC (SUPPLEMENTAL SPECIFICATIONS FOR WETLANDS AND WATERBODIES APPENDIX F

LEGEND:

- WETLAND DELINEATED JUNE 26, 2012
- WETLAND DELINEATED NOVEMBER 15, 2018
- WETLAND 100 FT. BUFFER
- STAKED HAYBALES
- SF — SF — SILT FENCE

EROSION CONTROL NOTES:

1. THE CONTRACTOR SHALL COMPLY WITH ALL PROVISIONS OF THE APPLICABLE NEW YORK STATE DEPARTMENT OF ENVIRONMENTAL CONSERVATION WATER QUALITY CERTIFICATION PROGRAM.
2. ALL NECESSARY PRECAUTIONS SHALL BE TAKEN TO PREVENT CONTAMINATION OF THE STREAMS BY SILT, SEDIMENT, FUELS, PULVERIZE, LUBRICANTS, EPOXY COATINGS, CONCRETE, LEACHATE, OR ANY OTHER POLLUTANT ASSOCIATED WITH CONSTRUCTION AND CONSTRUCTION PROCEDURES.
3. DURING CONSTRUCTION, NO WET OR FRESH CONCRETE OR LEACHATE SHALL BE ALLOWED TO ESCAPE INTO THE WATERS OF NEW YORK STATE, NOR SHALL WASHING FROM CONCRETE TRUCKS, MIXERS OR OTHER DEVICES BE ALLOWED TO ENTER ANY WETLANDS OR WATERS.
4. ANY DEBRIS OR EXCESS MATERIALS FROM CONSTRUCTION OF THIS PROJECT SHALL BE IMMEDIATELY AND COMPLETELY REMOVED FROM THE BED AND BANKS OF ALL WATER AREAS TO AN APPROPRIATE UPLAND AREA FOR DISPOSAL.
5. ALL EXCAVATED MATERIAL SHALL BE DISPOSED OF IN AN UPLAND SITE AND BE INITIALLY PLACED SO THAT IT CANNOT REASONABLY REENTER ANY WATER BODY OR WETLAND AREA.
6. ALL AREAS OF SOIL DISTURBANCE RESULTING FROM THIS PROJECT SHALL BE SEEDED WITH WETLAND SEED MIXTURE AND MULCHED WITH HAY OR STRAW WITHIN TWO (2) WEEKS OF FINAL GRADING. IF CONSTRUCTION ACTIVITIES ARE DISCONTINUED IN AREAS OF SOIL DISTURBANCE FOR MORE THAN FOUR (4) WEEKS, TEMPORARY VEGETATIVE GRADING SHALL ALSO BE SEEDED AND MULCHED. MULCH SHALL BE MAINTAINED UNTIL SUITABLE VEGETATIVE COVER IS ESTABLISHED.
7. PERIODIC CLEANING OF TEMPORARY SOIL EROSION AND POLLUTION CONTROL DEVICES MAY BE NECESSARY AS REQUESTED BY THE PROJECT ENGINEER.
8. IN THE EVENT DEWATERING OPERATIONS BECOME NECESSARY, A SETTLING BASIN WILL BE REQUIRED UNLESS THE PUMP DISCHARGE IS TO A WELL VEGETATED AREA. THE SETTLING BASIN SHALL BE OF SIZE, LOCATION AND DESIGN TO BE APPROVED BY THE PROJECT ENGINEER.
9. HAYBALES HAVE A LIMITED LIFE EXPECTANCY AND SHALL BE REPLACED IN LOCATIONS WHERE THEY HAVE BEEN IN USE FOR EXTENDED PERIODS AS DIRECTED BY THE PROJECT ENGINEER.
10. ALL SEDIMENT SHALL BE PREVENTED FROM ENTERING STORM DRAINS, DITCHES OR WATERCOURSES.
11. EROSION CONTROL MEASURES SHALL BE DEEMED INCLUDED UNDER THE BID ITEMS OF THE PROPOSAL. NO SEPARATE PAYMENT SHALL BE MADE FOR THESE WORK.
12. ALL TREES, STUMPS AND DEBRIS TO BE REMOVED FROM MANHOLES AND SURROUNDING AREAS

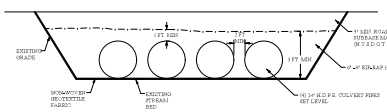

STREAM CROSSING "A" DETAIL

SCALE: NONE

NOTES:

1. STREAM CROSSING TO BE CONSTRUCTED 2 HOURS EITHER SIDE OF SCHEDULED LOW TIDE.
2. EXISTING GEOTECH MATERIAL TO BE REMOVED 30' BACK FROM EXISTING EMBANKMENT WHEN CROSSING IS REMOVED.

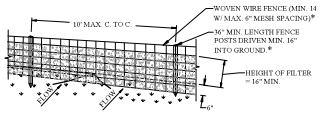

PERSPECTIVE VIEW

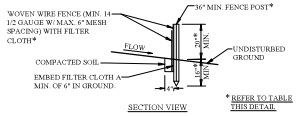

SECTION VIEW

* REFER TO TABLE THIS DETAIL

1. WOVEN WIRE FENCE TO BE FASTENED SECURELY TO FENCE POSTS WITH WIRE TIES OR STAPLES. POSTS SHALL BE STEEL EITHER "T" OR "U" TYPE OR HARDWOOD.
2. FILTER CLOTH TO BE TO BE FASTENED SECURELY TO WOVEN WIRE FENCE WITH TIES SPACED EVERY 24" AT TOP AND MID-SECTION. FENCE SHALL BE WOVEN WIRE, 12 1/2 GAUGE, 6" MAXIMUM MESH OPENING.
3. WHEN TWO SECTIONS OF FILTER CLOTH ADJOIN EACH OTHER THEY SHALL BE OVER- LAPPED BY SIX INCHES AND FOLDED. FILTER CLOTH SHALL BE EITHER FILTER X, MIRAFI 100X, STABILINKA T140N, OR APPROVED EQUIVALENT.
4. PREFABRICATED UNITS SHALL BE GEOFAB, ENVIROFENCE, OR APPROVED EQUIVALENT.
5. MAINTENANCE SHALL BE PERFORMED AS NEEDED AND MATERIAL REMOVED WHEN "BULGES" DEVELOP IN THE SILT FENCE.

		SLOPE LENGTH/FENCE LENGTH (FT.)		
SLOPE	STEEPNESS	STANDARD	REINFORCED	SUPER
< 2%	< 50:1	300/1500	N/A	N/A
2-10%	50:1 TO 10:1	125/1000	250/2000	300/2500
10-20%	10:1 TO 5:1	100/750	150/1000	200/1000
20-33%	5:1 TO 3:1	60/500	80/750	100/1000
33-50%	3:1 TO 2:1	40/250	70/350	100/500
> 50%	> 2:1	20/125	30/175	50/250

1. STANDARD SILT FENCE (SF) IS FABRIC ROLL S STAPLED TO WOODEN STAKES DRIVEN 16 INCHES IN THE GROUND.
2. REINFORCED SILT FENCE (RSF) IS FABRIC PLACED AGAINST WELDED WIRE FABRIC WITH ANCHORED STEEL POSTS DRIVEN 16 INCHES IN THE GROUND.
3. SUPER SILT FENCE (SSF) IS FABRIC PLACED AGAINST CHAIN LINK FENCE AS SUPPORT BACKING WITH POSTS DRIVEN 3 FEET IN THE GROUND.

SILT FENCE DETAIL

SCALE: NONE

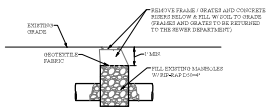

MANHOLE ABANDONMENT DETAIL

SCALE: NONE

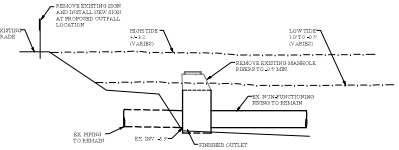

MANHOLE REMOVAL DETAIL

SCALE: NONE

NOTE:

1. REMOVE ALL PORTIONS OF EXISTING MANHOLE/RISERS.

MHE ENGINEERING
33 Airport Center Drive, Suite 202, New Windsor, NY 12553, (845) 567-3100
111 Wheatfield Drive, Suite 1, Milford, PA 18337, (570) 296-2765

HAZARDOUS MATERIAL NOTE:
THE SERVICES PROVIDED BY MHE, INCLUDING ALL WORK DEPICTED ON MHE PLANS, DO NOT INCLUDE SERVICES RELATED TO THE IDENTIFICATION, CONTROLS OR HANDLING OF HAZARDOUS MATERIALS, INCLUDING SUCH MATERIALS AS ASBESTOS AND LEAD PAINT. ALL TESTING, IDENTIFICATION, ABATEMENT, CONTROLS AND HANDLING OF HAZARDOUS MATERIALS SHALL BE UNDERTAKEN BY A HAZARDOUS MATERIAL CONSULTANT AND CERTIFIED PROFESSIONALS. IF SUCH MATERIALS HAVE BEEN IDENTIFIED, CONTRACTOR WILL COMMUNICATE DIRECTLY WITH HAZARDOUS MATERIAL PROFESSIONAL FOR THE PERFORMANCE OF ANY WORK ON OR ADJACENT TO SAID MATERIALS. IF UNIDENTIFIED MATERIALS OF CONCERN ARE ENCOUNTERED WHILE UNDERTAKING THE WORK SHOWN HEREON, CONTRACTOR SHALL IMMEDIATELY NOTIFY ENGINEER AND OWNER, AND SHALL OBTAIN DIRECTION FROM THE HAZARDOUS MATERIAL CONSULTANT PRIOR TO THE CONTINUATION OF WORK INVOLVING SUSPECTED MATERIAL.

UDIG·NY SAFE DIGGING STARTS HERE
CALL 811

UNAUTHORIZED ADDITION OR ALTERATION OF THIS PLAN IS A VIOLATION OF SECTION 7209(2) OF THE NEW YORK STATE EDUCATION LAW.

ALL PRODUCTION & INTELLECTUAL PROPERTY RIGHT RESERVED ©

CAESARS LANE WWTP EXPANSION PROJECT: PHASE 2
145 CAESARS LN.
NEW WINDSOR, NY 12553
FOR TOWN OF NEW WINDSOR
555 UNION AVE.
NEW WINDSOR, NY 12553

EXISTING OUTFALL ABANDONMENT PLAN AND DETAILS
FIGURE 6

REVISIONS		
NO.	DESCRIPTION	DATE

ISSUED DATE:	18 APR. 2025
DESIGN BY:	QMM
DRAWN BY:	RLJ
CHECKED BY:	MJS
REVIEWED BY:	MJS, JZ

SHEET NO.

FIG-6

PROJECT # 18-272 PHASE #

GENERAL NOTES:

1. SURVEY DATA OBTAINED FROM A PLAN ENTITLED "TOWN OF NEW WINDSOR WASTEWATER TREATMENT PLANT" PREPARED BY C.T. MALE ASSOCIATES AND DATED LATEST REVISION 7/23/19.

2. CONTRACTOR SHALL OBTAIN ALL SUPPLEMENTAL EXISTING CONDITIONS INFORMATION AS AVAILABLE FROM THE TOWN PERSONNEL AND VIA SITE EXPLORATION AS NEEDED DURING THE WORK.

3. WHERE SHOWN, THE LOCATION OF THE EXISTING UNDERGROUND UTILITIES ARE SHOWN IN AN APPROXIMATE WAY ONLY. THE CONTRACTOR SHALL DETERMINE THE EXACT LOCATION OF ALL EXISTING UTILITIES BEFORE COMMENCING WORK. IT SHALL BE THE CONTRACTOR'S RESPONSIBILITY TO CONTACT AND COORDINATE HIS WORK WITH ALL UTILITY COMPANIES. THE CONTRACTOR AGREES TO BE FULLY RESPONSIBLE FOR ANY DAMAGES WHICH MIGHT BE OCCASIONED BY HIS/HER FAILURE TO EXACTLY LOCATE AND PRESERVE ANY AND ALL UNDERGROUND UTILITIES.

4. ALL DISTURBED OR DAMAGED AREAS SHALL BE RESTORED AND/OR REPLACED TO MATCH OR EXCEED PRE-EXISTING CONDITIONS, AND COMPLY WITH ANY APPLICABLE CONTRACT DETAILS.

5. ANY MANHOLE OR VALVE ENCOUNTERED BY THE CONTRACTOR WITHIN THE CONTRACT LIMITS AND NOT SHOWN SHALL BE ADJUSTED TO THE NEW GRADE. THIS WORK SHALL BE DEEMED INCLUDED UNDER THE PROPOSAL PAYMENT ITEMS. NO SEPARATE PAYMENT SHALL BE MADE FOR THIS WORK.

6. THE CONTRACTOR SHALL BE RESPONSIBLE FOR ALL CONSTRUCTION LAYOUT. PRIOR TO CONSTRUCTION, THE CONTRACTOR SHALL REVIEW LAYOUT WITH THE ENGINEER/OWNER IN THE FIELD AFTER THE LAYOUT IS COMPLETED BY THE CONTRACTOR.

7. THE CONTRACTOR SHALL INCLUDE IN THEIR BID COSTS FOR DISCONNECTING, MODIFICATION AND RECONNECTION TO EXISTING PITS AND STRUCTURES AS NEEDED TO PERFORM WORK. SUCH WORK IS SPECIFICALLY CALLED OUT IN SOME AREAS; HOWEVER, OTHER LOCATIONS OF SUCH WORK WHICH IS NECESSARY TO ACCOMPLISH OTHER WORK OR MODIFICATIONS CALLED FOR SHALL BE DEEMED INCLUDED IN THE LUMP SUM BID, EVEN IF NOT SPECIFICALLY CALLED OUT.

8. THE CONTRACTOR SHALL MAINTAIN ACCESS THROUGH THE SEWAGE TREATMENT FACILITY DURING CONSTRUCTION ACTIVITIES.

9. ALL ITEMS NOTED AS "T.B.R." SHALL BE COMPLETELY REMOVED AND PROPERLY DISPOSED OF BY THE CONTRACTOR.

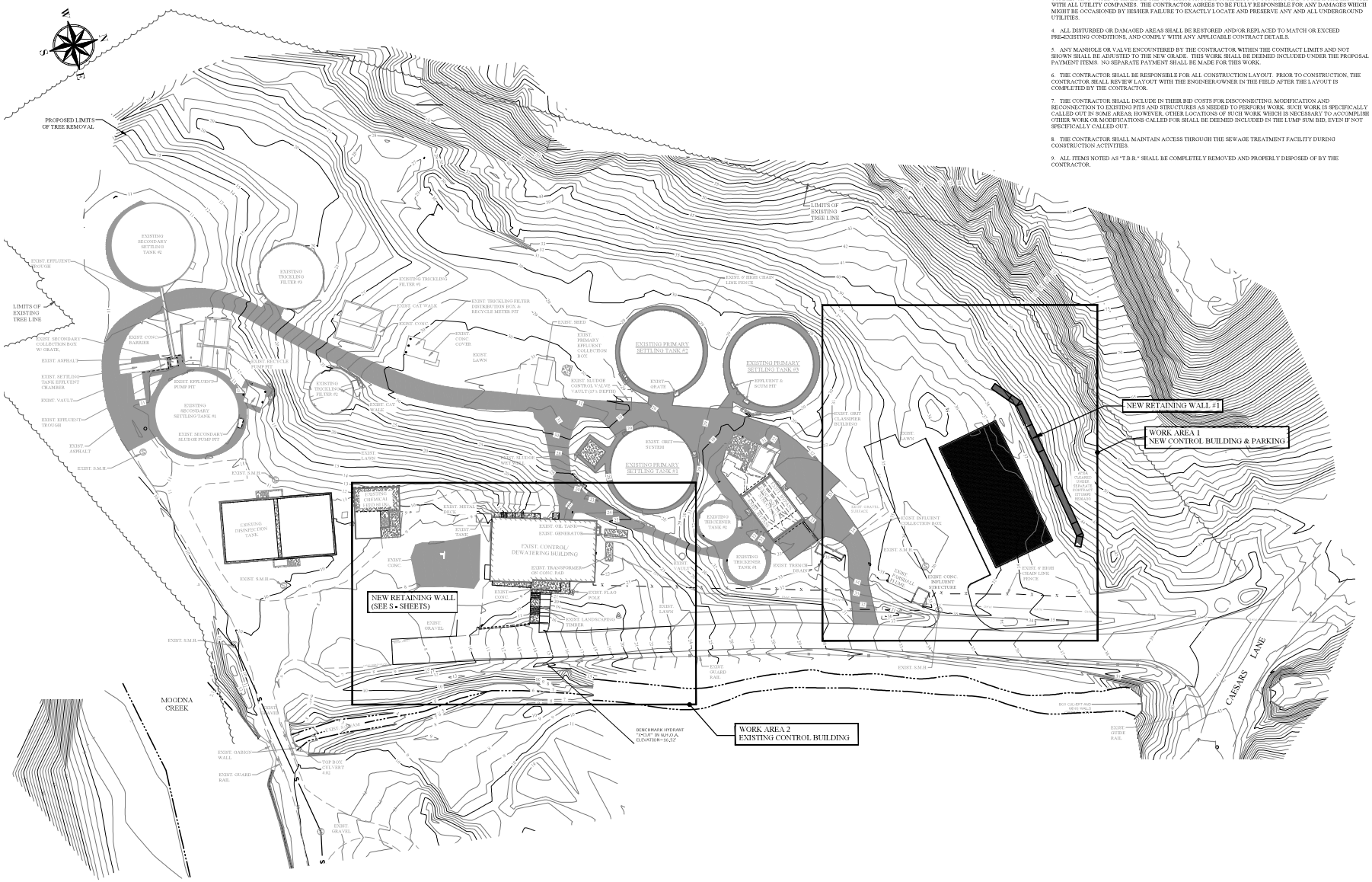

MHE ENGINEERING
33 Airport Center Drive, Suite 202
New Windsor, NY 12553
(845) 567-3100
111 Wheatfield Drive, Suite 1
Milford, PA 18337
(570) 296-7765

HAZARDOUS MATERIAL NOTE:

THE SERVICES PROVIDED BY MHE, INCLUDING ALL WORK DEPICTED ON MHE PLANS, DO NOT INCLUDE SERVICES RELATED TO THE IDENTIFICATION, CONTROLS OR HANDLING OF HAZARDOUS MATERIALS, INCLUDING SUCH MATERIALS AS ASBESTOS AND LEAD PAINT. ALL TESTING, IDENTIFICATION, ABATEMENT, CONTROLS, AND HANDLING OF HAZARDOUS MATERIALS SHALL BE UNDERTAKEN BY A HAZARDOUS MATERIAL CONSULTANT AND CERTIFIED PROFESSIONALS. IF SUCH MATERIALS HAVE BEEN IDENTIFIED, CONTRACTOR WILL COMMUNICATE DIRECTLY WITH HAZARDOUS MATERIAL PROFESSIONAL FOR THE PERFORMANCE OF ANY WORK ON OR ADJACENT TO SAID MATERIALS. IF UNIDENTIFIED MATERIALS OF CONCERN ARE ENCOUNTERED WHILE UNDERTAKING THE WORK SHOWN HEREON, CONTRACTOR SHALL IMMEDIATELY NOTIFY ENGINEER AND OWNER, AND SHALL OBTAIN DIRECTION FROM THE HAZARDOUS MATERIAL CONSULTANT PRIOR TO THE CONTINUATION OF WORK INVOLVING SUSPECTED MATERIAL.

UDIG·NY SAFE DIGGING STARTS HERE
CALL 811

UNAUTHORIZED ADDITION OR ALTERATION OF THIS PLAN IS A VIOLATION OF SECTION 7209(2) OF THE NEW YORK STATE EDUCATION LAW.

ALL PRODUCTION & INTELLECTUAL PROPERTY RIGHT RESERVED ©

CAESARS LANE WWTP EXPANSION PROJECT: PHASE 1

145 CAESARS LN
NEW WINDSOR, NY 12553

FOR TOWN OF NEW WINDSOR
555 UNION AVE.
NEW WINDSOR, NY 12553

PHASE 1 WORK OVERALL PLAN FIGURE 7

REVISIONS

NO	DESCRIPTION	DATE

ISSUED DATE:	11 APR, 2025
DESIGN BY:	MJS
DRAWN BY:	HPRS
CHECKED BY:	MWW
REVIEWED BY:	MJL

SHEET NO.

FIG-7

PROJECT # 18-272 PHASE # 1

F:\2018\18-272 Caesars Lane WWTP Improvements\Expansion Phase 1 - CERT\Drafting\Site Plans - Civil\18-272 WWTP Phase 1 Exp_Survey Plan - 4/14/2025 10:49:26 AM



MHE ENGINEERING
33 Airport Center Drive, Suite 202 New Windsor, NY 12553 (845) 567-3100
111 Wheatfield Drive, Suite 1 Milford, PA 18337 (570) 296-7765

HAZARDOUS MATERIAL NOTE:
THE SERVICES PROVIDED BY MHE, INCLUDING ALL WORK DEPICTED ON MHE PLANS, DO NOT INCLUDE SERVICES RELATED TO THE IDENTIFICATION, CONTROLS OR HANDLING OF HAZARDOUS MATERIALS, INCLUDING SUCH MATERIALS AS ASBESTOS AND LEAD PAINT. ALL TESTING, IDENTIFICATION, ABATEMENT, CONTROLS AND HANDLING OF HAZARDOUS MATERIALS SHALL BE UNDERTAKEN BY A HAZARDOUS MATERIAL CONSULTANT AND CERTIFIED PROFESSIONALS. IF SUCH MATERIALS HAVE BEEN IDENTIFIED, CONTRACTOR WILL COMMUNICATE DIRECTLY WITH HAZARDOUS MATERIAL PROFESSIONAL FOR THE PERFORMANCE OF ANY WORK ON OR ADJACENT TO SAID MATERIALS. IF UNIDENTIFIED MATERIALS OF CONCERN ARE ENCOUNTERED WHILE UNDERTAKING THE WORK SHOWN HEREON, CONTRACTOR SHALL IMMEDIATELY NOTIFY ENGINEER AND OWNER, AND SHALL OBTAIN DIRECTION FROM THE HAZARDOUS MATERIAL CONSULTANT PRIOR TO THE CONTINUATION OF WORK INVOLVING SUSPECTED MATERIAL.

UDIG·NY SAFE DIGGING STARTS HERE
CALL 811

UNAUTHORIZED ADDITION OR ALTERATION OF THIS PLAN IS A VIOLATION OF SECTION 7209(2) OF THE NEW YORK STATE EDUCATION LAW.

ALL PRODUCTION & INTELLECTUAL PROPERTY RIGHT RESERVED ©

CAESARS LANE WWTP EXPANSION PROJECT: PHASE 1
145 CAESARS LN.
NEW WINDSOR, NY 12553
FOR TOWN OF NEW WINDSOR
555 UNION AVE.
NEW WINDSOR, NY 12553

PHASE 1 WORK - NEW CONTROL BUILDING SITE PLAN (AREA 1)
FIGURE 8
PARTIAL PLAN 1 OF 2

REVISIONS

NO	DESCRIPTION	DATE

ISSUED DATE:	11 APR, 2025
DESIGN BY:	MJS
DRAWN BY:	HPRS
CHECKED BY:	MWW
REVIEWED BY:	MJL

SHEET NO.

FIG-8

PROJECT # 18-272 PHASE # 1

F:\2018\18-272 Caesars Lane WWTP Improvements\Expansion Phase 1 - CEDS\Drafting\Site Plans - Civil\Sheet Plans\18-272 Area 1 Site Plan.dwg, Dwg, 4/10/2025 10:53:53 AM

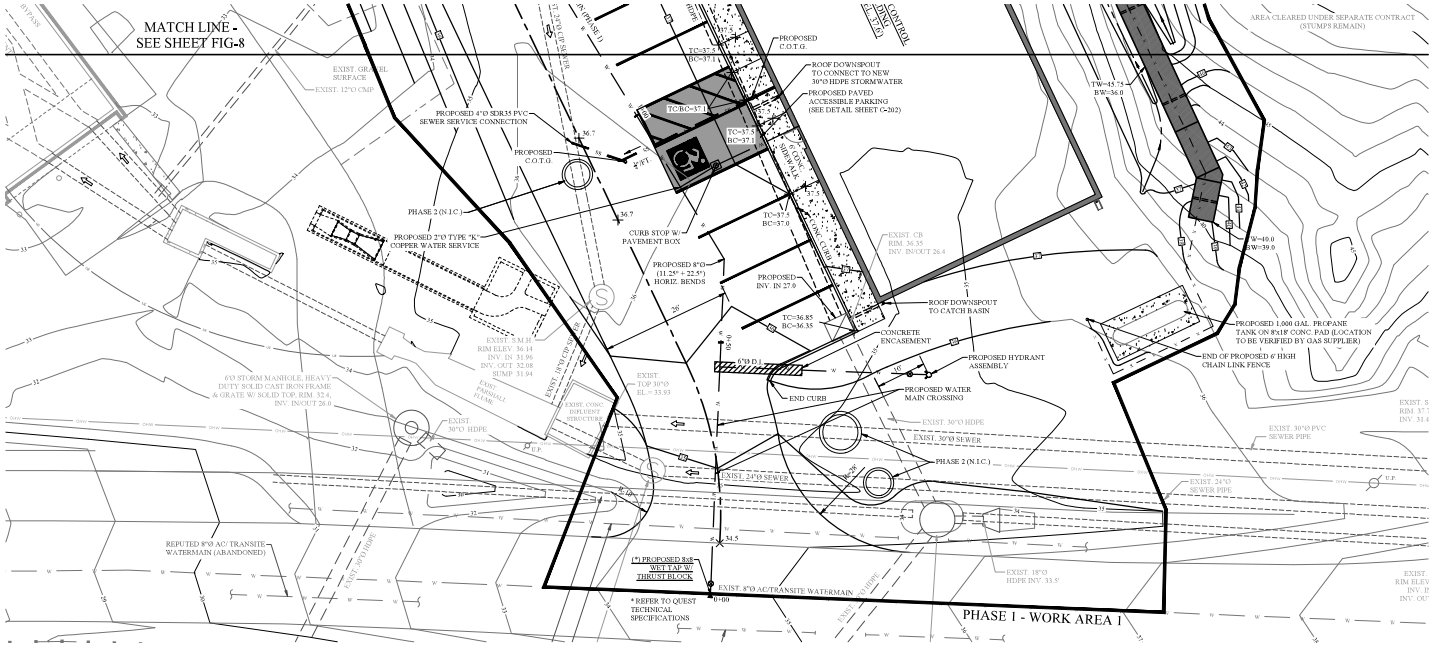

MHE ENGINEERING
33 Airport Center Drive, Suite 202 New Windsor, NY 12553 (845) 567-3100
111 Wheatfield Drive, Suite 1 Milford, PA 18337 (570) 296-7705

HAZARDOUS MATERIAL NOTE:
THE SERVICES PROVIDED BY MHE, INCLUDING ALL WORK DEPICTED ON MHE PLANS, DO NOT INCLUDE SERVICES RELATED TO THE IDENTIFICATION, CONTROLS OR HANDLING OF HAZARDOUS MATERIALS, INCLUDING SUCH MATERIALS AS ASBESTOS AND LEAD PAINT. ALL TESTING, IDENTIFICATION, ABATEMENT, CONTROLS, AND HANDLING OF HAZARDOUS MATERIALS SHALL BE UNDERTAKEN BY A HAZARDOUS MATERIAL CONSULTANT AND CERTIFIED PROFESSIONALS. IF SUCH MATERIALS HAVE BEEN IDENTIFIED, CONTRACTOR WILL COMMUNICATE DIRECTLY WITH HAZARDOUS MATERIAL PROFESSIONAL FOR THE PERFORMANCE OF ANY WORK ON OR ADJACENT TO SAID MATERIALS. IF UNIDENTIFIED MATERIALS OF CONCERN ARE ENCOUNTERED WHILE UNDERTAKING THE WORK SHOWN HEREON, CONTRACTOR SHALL IMMEDIATELY NOTIFY ENGINEER AND OWNER, AND SHALL OBTAIN DIRECTION FROM THE HAZARDOUS MATERIAL CONSULTANT PRIOR TO THE CONTINUATION OF WORK INVOLVING SUSPECTED MATERIAL.

UDIG·NY SAFE DIGGING STARTS HERE
CALL 811

UNAUTHORIZED ADDITION OR ALTERATION OF THIS PLAN IS A VIOLATION OF SECTION 7209(2) OF THE NEW YORK STATE EDUCATION LAW.

ALL PRODUCTION & INTELLECTUAL PROPERTY RIGHT RESERVED ©

CAESARS LANE WWTP EXPANSION PROJECT: PHASE 1
145 CAESARS LN
NEW WINDSOR, NY 12553
FOR TOWN OF NEW WINDSOR
555 UNION AVE.
NEW WINDSOR, NY 12553

PHASE 1 WORK - NEW CONTROL BUILDING SITE PLAN (AREA 1)
FIGURE 9
PARTIAL PLAN 2 OF 2

REVISIONS

NO	DESCRIPTION	DATE

ISSUED DATE:	11 APR, 2025
DESIGN BY:	MJS
DRAWN BY:	HPB/S
CHECKED BY:	MWW
REVIEWED BY:	MJL

SHEET NO.

FIG-9

PROJECT # 18-272 PHASE # 1

F:\2018\18-272 Caesars Lane WWTP Improvements\Expansion Phase 1 - CEDS\Drafting\Site Plans - Civil\Area 1 Plans\FIG-9 Area 1 Site Plan.dwg, Plot: 4/10/2025 10:17:28 AM

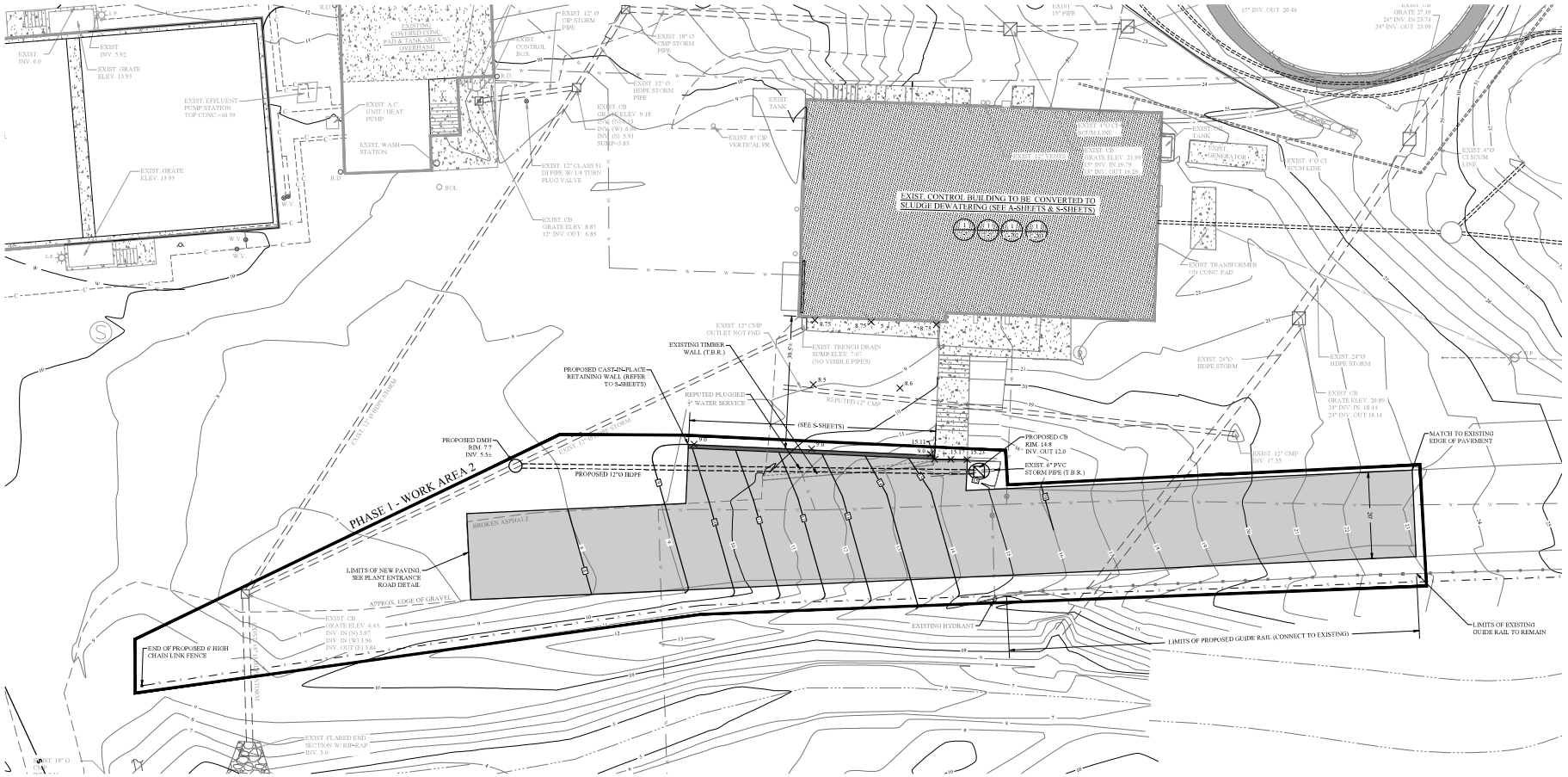

MHE ENGINEERING
33 Airport Center Drive, Suite 202
New Windsor, NY 12553
(845) 567-3100
111 Wheatfield Drive, Suite 1
Milford, PA 18337
(570) 296-7765

HAZARDOUS MATERIAL NOTE

THE SERVICES PROVIDED BY MHE, INCLUDING ALL WORK DEPICTED ON MHE PLANS, DO NOT INCLUDE SERVICES RELATED TO THE IDENTIFICATION, CONTROLS OR HANDLING OF HAZARDOUS MATERIALS, INCLUDING SUCH MATERIALS AS ASBESTOS AND LEAD PAINT. ALL TESTING, IDENTIFICATION, ABATEMENT, CONTROLS, AND HANDLING OF HAZARDOUS MATERIALS SHALL BE UNDERTAKEN BY A HAZARDOUS MATERIAL CONSULTANT AND CERTIFIED PROFESSIONALS. IF SUCH MATERIALS HAVE BEEN IDENTIFIED, CONTRACTOR WILL COMMUNICATE DIRECTLY WITH HAZARDOUS MATERIAL PROFESSIONAL FOR THE PERFORMANCE OF ANY WORK ON OR ADJACENT TO SAID MATERIALS. IF UNIDENTIFIED MATERIALS OF CONCERN ARE ENCOUNTERED WHILE UNDERTAKING THE WORK SHOWN HEREON, CONTRACTOR SHALL IMMEDIATELY NOTIFY ENGINEER AND OWNER, AND SHALL OBTAIN DIRECTION FROM THE HAZARDOUS MATERIAL CONSULTANT PRIOR TO THE CONTINUATION OF WORK INVOLVING SUSPECTED MATERIAL.

UDIG·NY SAFE DIGGING STARTS HERE
CALL 811

UNAUTHORIZED ADDITION OR ALTERATION OF THIS PLAN IS A VIOLATION OF SECTION 7209(2) OF THE NEW YORK STATE EDUCATION LAW.

ALL PRODUCTION & INTELLECTUAL PROPERTY RIGHT RESERVED ©

CAESARS LANE WWTP EXPANSION PROJECT: PHASE 1
145 CAESARS LN
NEW WINDSOR, NY 12553
FOR TOWN OF NEW WINDSOR
555 UNION AVE.
NEW WINDSOR, NY 12553

PHASE 1 WORK - EXISTING CONTROL BUILDING SITE PLAN (AREA 2) FIGURE 10

REVISIONS

NO	DESCRIPTION	DATE

ISSUED DATE:	11 APR, 2025
DESIGN BY:	MJS
DRAWN BY:	HPRS
CHECKED BY:	MWW
REVIEWED BY:	MJL

SHEET NO.

FIG-10

PROJECT # 18-272 PHASE # 1

F:\2018\18-272 Caesars Lane WWTP Improvements\Expansion Phase 1 - CEDD\Drafting\Site Plans - Civil\Exhibits\Phase 1 Area 2 Site Plan.dwg, Fig-10, 4/14/2025 11:02:38 AM

Appendix B

GENERAL PERMIT # GP-0-20-001

&

REQUEST TO CONTINUE COVERAGE (RCC) GP-0-25-001

NEW YORK STATE OF OPPORTUNITY | Department of Environmental Conservation

NEW YORK STATE
DEPARTMENT OF ENVIRONMENTAL CONSERVATION

SPDES GENERAL PERMIT
FOR STORMWATER DISCHARGES

From

CONSTRUCTION ACTIVITY

Permit No. GP- 0-20-001

Issued Pursuant to Article 17, Titles 7, 8 and Article 70

of the Environmental Conservation Law

Effective Date: January 29, 2020 Expiration Date: January 28, 2025

John J. Ferguson

Chief Permit Administrator

1-23-20

Authorized Signature Date

Address: NYS DEC
Division of Environmental Permits
625 Broadway, 4th Floor
Albany, N.Y. 12233-1750

PREFACE

Pursuant to Section 402 of the Clean Water Act ("CWA"), stormwater *discharges* from certain *construction activities* are unlawful unless they are authorized by a *National Pollutant Discharge Elimination System ("NPDES")* permit or by a state permit program. New York administers the approved State Pollutant Discharge Elimination System (SPDES) program with permits issued in accordance with the New York State Environmental Conservation Law (ECL) Article 17, Titles 7, 8 and Article 70.

An *owner or operator* of a *construction activity* that is eligible for coverage under this permit must obtain coverage prior to the *commencement of construction activity*. Activities that fit the definition of "*construction activity*", as defined under 40 CFR 122.26(b)(14)(x), (15)(i), and (15)(ii), constitute construction of a *point source* and therefore, pursuant to ECL section 17-0505 and 17-0701, the *owner or operator* must have coverage under a SPDES permit prior to *commencing construction activity*. The *owner or operator* cannot wait until there is an actual *discharge* from the *construction site* to obtain permit coverage.

***Note: The italicized words/phrases within this permit are defined in Appendix A.**

NEW YORK STATE DEPARTMENT OF ENVIRONMENTAL CONSERVATION
SPDES GENERAL PERMIT FOR STORMWATER DISCHARGES FROM CONSTRUCTION ACTIVITIES

Table of Contents

Part 1. PERMIT COVERAGE AND LIMITATIONS 1
A. Permit Application 1
B. Effluent Limitations Applicable to Discharges from Construction Activities 1
C. Post-construction Stormwater Management Practice Requirements 4
D. Maintaining Water Quality 8
E. Eligibility Under This General Permit 9
F. Activities Which Are Ineligible for Coverage Under This General Permit 9
Part II. PERMIT COVERAGE 12
A. How to Obtain Coverage 12
B. Notice of Intent (NOI) Submittal 13
C. Permit Authorization 13
D. General Requirements For Owners or Operators With Permit Coverage 15
E. Permit Coverage for Discharges Authorized Under GP-0-15-002 17
F. Change of Owner or Operator 17
Part III. STORMWATER POLLUTION PREVENTION PLAN (SWPPP) 18
A. General SWPPP Requirements 18
B. Required SWPPP Contents 20
C. Required SWPPP Components by Project Type 24
Part IV. INSPECTION AND MAINTENANCE REQUIREMENTS 24
A. General Construction Site Inspection and Maintenance Requirements 24
B. Contractor Maintenance Inspection Requirements 24
C. Qualified Inspector Inspection Requirements 25
Part V. TERMINATION OF PERMIT COVERAGE 29
A. Termination of Permit Coverage 29
Part VI. REPORTING AND RETENTION RECORDS 31
A. Record Retention 31
B. Addresses 31
Part VII. STANDARD PERMIT CONDITIONS 31
A. Duty to Comply 31
B. Continuation of the Expired General Permit 32
C. Enforcement 32
D. Need to Halt or Reduce Activity Not a Defense 32
E. Duty to Mitigate 33
F. Duty to Provide Information 33
G. Other Information 33
H. Signatory Requirements 33
I. Property Rights 35
J. Severability 35

K. Requirement to Obtain Coverage Under an Alternative Permit....35
L. Proper Operation and Maintenance....36
M. Inspection and Entry....36
N. Permit Actions....37
O. Definitions....37
P. Re-Opener Clause....37
Q. Penalties for Falsification of Forms and Reports....37
R. Other Permits....38
APPENDIX A – Acronyms and Definitions....39
Acronyms....39
Definitions....40
APPENDIX B – Required SWPPP Components by Project Type....48
Table 1....48
Table 2....50
APPENDIX C – Watersheds Requiring Enhanced Phosphorus Removal....52
APPENDIX D – Watersheds with Lower Disturbance Threshold....58
APPENDIX E – 303(d) Segments Impaired by Construction Related Pollutant(s)....59
APPENDIX F – List of NYS DEC Regional Offices....65

Part 1. PERMIT COVERAGE AND LIMITATIONS

A. Permit Application

This permit authorizes stormwater *discharges* to *surface waters of the State* from the following *construction activities* identified within 40 CFR Parts 122.26(b)(14)(x), 122.26(b)(15)(i) and 122.26(b)(15)(ii), provided all of the eligibility provisions of this permit are met:

1. *Construction activities* involving soil disturbances of one (1) or more acres; including disturbances of less than one acre that are part of a *larger common plan of development or sale* that will ultimately disturb one or more acres of land; excluding *routine maintenance activity* that is performed to maintain the original line and grade, hydraulic capacity or original purpose of a facility;

2. *Construction activities* involving soil disturbances of less than one (1) acre where the Department has determined that a *SPDES* permit is required for stormwater *discharges* based on the potential for contribution to a violation of a *water quality standard* or for significant contribution of *pollutants* to *surface waters of the State.*

3. *Construction activities* located in the watershed(s) identified in Appendix D that involve soil disturbances between five thousand (5,000) square feet and one (1) acre of land.

B. Effluent Limitations Applicable to Discharges from Construction Activities

*Discharge*s authorized by this permit must achieve, at a minimum, the effluent limitations in Part I.B.1. (a) – (f) of this permit. These limitations represent the degree of effluent reduction attainable by the application of best practicable technology currently available.

1. Erosion and Sediment Control Requirements - The *owner or operator* must select, design, install, implement and maintain control measures to *minimize* the *discharge* of *pollutants* and prevent a violation of the *water quality standards*. The selection, design, installation, implementation, and maintenance of these control measures must meet the non-numeric effluent limitations in Part I.B.1.(a) – (f) of this permit and be in accordance with the New York State Standards and Specifications for Erosion and Sediment Control, dated November 2016, using sound engineering judgment. Where control measures are not designed in conformance with the design criteria included in the technical standard, the *owner or operator* must include in the *Stormwater Pollution Prevention Plan* ("SWPPP") the reason(s) for the

deviation or alternative design and provide information which demonstrates that the deviation or alternative design is *equivalent* to the technical standard.

a. **Erosion and Sediment Controls.** Design, install and maintain effective erosion and sediment controls to *minimize* the *discharge* of *pollutants* and prevent a violation of the *water quality standards*. At a minimum, such controls must be designed, installed and maintained to:

   (i) *Minimize* soil erosion through application of runoff control and soil stabilization control measure to *minimize pollutant discharge*s;

   (ii) Control stormwater *discharge*s, including both peak flowrates and total stormwater volume, to *minimize* channel and *streambank* erosion and scour in the immediate vicinity of the *discharge* points;

   (iii) *Minimize* the amount of soil exposed during *construction activity*;

   (iv) *Minimize* the disturbance of *steep slopes*;

   (v) *Minimize* sediment *discharge*s from the site;

   (vi) Provide and maintain *natural buffer*s around surface waters, direct stormwater to vegetated areas and maximize stormwater infiltration to reduce *pollutant discharge*s, unless *infeasible*;

   (vii) *Minimize* soil compaction. Minimizing soil compaction is not required where the intended function of a specific area of the site dictates that it be compacted;

   (viii) Unless *infeasible*, preserve a sufficient amount of topsoil to complete soil restoration and establish a uniform, dense vegetative cover; and

   (ix) *Minimize* dust. On areas of exposed soil, *minimize* dust through the appropriate application of water or other dust suppression techniques to control the generation of pollutants that could be discharged from the site.

b. **Soil Stabilization**. In areas where soil disturbance activity has temporarily or permanently ceased, the application of soil stabilization measures must be initiated by the end of the next business day and completed within fourteen (14) days from the date the current soil disturbance activity ceased. For construction sites that *directly discharge* to one of the 303(d) segments

listed in Appendix E or is located in one of the watersheds listed in Appendix C, the application of soil stabilization measures must be initiated by the end of the next business day and completed within seven (7) days from the date the current soil disturbance activity ceased. See Appendix A for definition of *Temporarily Ceased*.

c. **Dewatering**. *Discharge*s from *dewatering* activities, including *discharge*s from *dewatering* of trenches and excavations, must be managed by appropriate control measures.

d. **Pollution Prevention Measures**. Design, install, implement, and maintain effective pollution prevention measures to *minimize* the *discharge* of *pollutants* and prevent a violation of the *water quality standards*. At a minimum, such measures must be designed, installed, implemented and maintained to:

(i) *Minimize* the *discharge* of *pollutants* from equipment and vehicle washing, wheel wash water, and other wash waters. This applies to washing operations that use clean water only. Soaps, detergents and solvents cannot be used;

(ii) *Minimize* the exposure of building materials, building products, construction wastes, trash, landscape materials, fertilizers, pesticides, herbicides, detergents, sanitary waste, hazardous and toxic waste, and other materials present on the site to precipitation and to stormwater. Minimization of exposure is not required in cases where the exposure to precipitation and to stormwater will not result in a *discharge* of *pollutants*, or where exposure of a specific material or product poses little risk of stormwater contamination (such as final products and materials intended for outdoor use) ; and

(iii) Prevent the *discharge* of *pollutants* from spills and leaks and implement chemical spill and leak prevention and response procedures.

e. **Prohibited *Discharge*s.** The following *discharge*s are prohibited:

(i) Wastewater from washout of concrete;

(ii) Wastewater from washout and cleanout of stucco, paint, form release oils, curing compounds and other construction materials;

(iii) Fuels, oils, or other *pollutants* used in vehicle and equipment operation and maintenance;

(iv) Soaps or solvents used in vehicle and equipment washing; and

(v) Toxic or hazardous substances from a spill or other release.

f. Surface Outlets. When discharging from basins and impoundments, the outlets shall be designed, constructed and maintained in such a manner that sediment does not leave the basin or impoundment and that erosion at or below the outlet does not occur.

C. Post-construction Stormwater Management Practice Requirements

1. The *owner or operator* of a *construction activity* that requires post-construction stormwater management practices pursuant to Part III.C. of this permit must select, design, install, and maintain the practices to meet the *performance criteria* in the New York State Stormwater Management Design Manual ("Design Manual"), dated January 2015, using sound engineering judgment. Where post-construction stormwater management practices ("SMPs") are not designed in conformance with the *performance criteria* in the Design Manual, the *owner or operator* must include in the SWPPP the reason(s) for the deviation or alternative design and provide information which demonstrates that the deviation or alternative design is *equivalent* to the technical standard.

2. The *owner or operator* of a *construction activity* that requires post-construction stormwater management practices pursuant to Part III.C. of this permit must design the practices to meet the applicable *sizing criteria* in Part I.C.2.a., b., c. or d. of this permit.

a. Sizing Criteria for New Development

(i) Runoff Reduction Volume ("RRv"): Reduce the total Water Quality Volume ("WQv") by application of RR techniques and standard SMPs with RRv capacity. The total WQv shall be calculated in accordance with the criteria in Section 4.2 of the Design Manual.

(ii) Minimum RRv and Treatment of Remaining Total WQv: Construction activities that cannot meet the criteria in Part I.C.2.a.(i) of this permit due to site limitations shall direct runoff from all newly constructed impervious areas to a RR technique or standard SMP with RRv capacity unless infeasible. The specific site limitations that prevent the reduction of 100% of the WQv shall be documented in the SWPPP.

For each impervious area that is not directed to a RR technique or standard SMP with RRv capacity, the SWPPP must include documentation which demonstrates that all options were considered and for each option explains why it is considered infeasible.

In no case shall the runoff reduction achieved from the newly constructed impervious areas be less than the Minimum RRv as calculated using the criteria in Section 4.3 of the Design Manual. The remaining portion of the total WQv that cannot be reduced shall be treated by application of standard SMPs.

(iii) Channel Protection Volume ("Cpv"): Provide 24 hour extended detention of the post-developed 1-year, 24-hour storm event; remaining after runoff reduction. The Cpv requirement does not apply when:
(1) Reduction of the entire Cpv is achieved by application of runoff reduction techniques or infiltration systems, or
(2) The site discharges directly to tidal waters, or fifth order or larger streams.

(iv) *Overbank* Flood Control Criteria ("Qp"): Requires storage to attenuate the post-development 10-year, 24-hour peak discharge rate (Qp) to predevelopment rates. The Qp requirement does not apply when:
(1) the site discharges directly to tidal waters or fifth order or larger streams, or
(2) A downstream analysis reveals that *overbank* control is not required.

(v) Extreme Flood Control Criteria ("Qf"): Requires storage to attenuate the post-development 100-year, 24-hour peak discharge rate (Qf) to predevelopment rates. The Qf requirement does not apply when:
(1) the site discharges directly to tidal waters or fifth order or larger streams, or
(2) A downstream analysis reveals that *overbank* control is not required.

b. *Sizing Criteria* for *New Development* in Enhanced Phosphorus Removal Watershed

(i) Runoff Reduction Volume (RRv): Reduce the total Water Quality Volume (WQv) by application of RR techniques and standard SMPs with RRv capacity. The total WQv is the runoff volume from the 1-year, 24 hour design storm over the post-developed watershed and shall be

calculated in accordance with the criteria in Section 10.3 of the Design Manual.

(ii) Minimum RRv and Treatment of Remaining Total WQv: *Construction activities* that cannot meet the criteria in Part I.C.2.b.(i) of this permit due to *site limitations* shall direct runoff from all newly constructed *impervious areas* to a RR technique or standard SMP with RRv capacity unless *infeasible*. The specific *site limitations* that prevent the reduction of 100% of the WQv shall be documented in the SWPPP. For each *impervious area* that is not directed to a RR technique or standard SMP with RRv capacity, the SWPPP must include documentation which demonstrates that all options were considered and for each option explains why it is considered *infeasible.*

In no case shall the runoff reduction achieved from the newly constructed *impervious areas* be less than the Minimum RRv as calculated using the criteria in Section 10.3 of the Design Manual. The remaining portion of the total WQv that cannot be reduced shall be treated by application of standard SMPs.

(iii) Channel Protection Volume (Cpv): Provide 24 hour extended detention of the post-developed 1-year, 24-hour storm event; remaining after runoff reduction. The Cpv requirement does not apply when:
(1) Reduction of the entire Cpv is achieved by application of runoff reduction techniques or infiltration systems, or
(2) The site *discharge*s directly to tidal waters, or fifth order or larger streams.

(iv) *Overbank* Flood Control Criteria (Qp): Requires storage to attenuate the post-development 10-year, 24-hour peak *discharge* rate (Qp) to predevelopment rates. The Qp requirement does not apply when:
(1) the site *discharge*s directly to tidal waters or fifth order or larger streams, or
(2) A downstream analysis reveals that *overbank* control is not required.

(v) Extreme Flood Control Criteria (Qf): Requires storage to attenuate the post-development 100-year, 24-hour peak *discharge* rate (Qf) to predevelopment rates. The Qf requirement does not apply when:
(1) the site *discharge*s directly to tidal waters or fifth order or larger streams, or
(2) A downstream analysis reveals that *overbank* control is not required.

c. Sizing Criteria for Redevelopment Activity

(i) Water Quality Volume (WQv): The WQv treatment objective for *redevelopment activity* shall be addressed by one of the following options. *Redevelopment activities* located in an Enhanced Phosphorus Removal Watershed (see Part III.B.3. and Appendix C of this permit) shall calculate the WQv in accordance with Section 10.3 of the Design Manual. All other *redevelopment activities* shall calculate the WQv in accordance with Section 4.2 of the Design Manual.

(1) Reduce the existing *impervious cover* by a minimum of 25% of the total disturbed, *impervious area*. The Soil Restoration criteria in Section 5.1.6 of the Design Manual must be applied to all newly created pervious areas, or

(2) Capture and treat a minimum of 25% of the WQv from the disturbed, *impervious area* by the application of standard SMPs; or reduce 25% of the WQv from the disturbed, *impervious area* by the application of RR techniques or standard SMPs with RRv capacity., or

(3) Capture and treat a minimum of 75% of the WQv from the disturbed, *impervious area* as well as any additional runoff from tributary areas by application of the alternative practices discussed in Sections 9.3 and 9.4 of the Design Manual., or

(4) Application of a combination of 1, 2 and 3 above that provide a weighted average of at least two of the above methods. Application of this method shall be in accordance with the criteria in Section 9.2.1(B) (IV) of the Design Manual.

If there is an existing post-construction stormwater management practice located on the site that captures and treats runoff from the *impervious area* that is being disturbed, the WQv treatment option selected must, at a minimum, provide treatment equal to the treatment that was being provided by the existing practice(s) if that treatment is greater than the treatment required by options 1 – 4 above.

(ii) Channel Protection Volume (Cpv): Not required if there are no changes to hydrology that increase the *discharge* rate from the project site.

(iii) *Overbank* Flood Control Criteria (Qp): Not required if there are no changes to hydrology that increase the *discharge* rate from the project site.

(iv) Extreme Flood Control Criteria (Qf): Not required if there are no changes to hydrology that increase the *discharge* rate from the project site

d. Sizing Criteria for Combination of Redevelopment Activity and New Development

Construction projects that include both New Development and Redevelopment Activity shall provide post-construction stormwater management controls that meet the sizing criteria calculated as an aggregate of the Sizing Criteria in Part I.C.2.a. or b. of this permit for the New Development portion of the project and Part I.C.2.c of this permit for Redevelopment Activity portion of the project.

D. Maintaining Water Quality

The Department expects that compliance with the conditions of this permit will control *discharge*s necessary to meet applicable *water quality standards*. It shall be a violation of the *ECL* for any discharge to either cause or contribute to a violation of *water quality standards* as contained in Parts 700 through 705 of Title 6 of the Official Compilation of Codes, Rules and Regulations of the State of New York, such as:

1. There shall be no increase in turbidity that will cause a substantial visible contrast to natural conditions;

2. There shall be no increase in suspended, colloidal or settleable solids that will cause deposition or impair the waters for their best usages; and

3. There shall be no residue from oil and floating substances, nor visible oil film, nor globules of grease.

If there is evidence indicating that the stormwater *discharge*s authorized by this permit are causing, have the reasonable potential to cause, or are contributing to a violation of the *water quality standards*; the *owner or operator* must take appropriate corrective action in accordance with Part IV.C.5. of this general permit and document in accordance with Part IV.C.4. of this general permit. To address the *water quality standard* violation the *owner or operator* may need to provide additional information, include and implement appropriate controls in the SWPPP to correct the problem, or obtain an individual SPDES permit.

If there is evidence indicating that despite compliance with the terms and conditions of this general permit it is demonstrated that the stormwater *discharge*s authorized by this permit are causing or contributing to a violation of *water quality standards*, or if the Department determines that a modification of the permit is necessary to prevent a violation of *water quality standards*, the authorized *discharge*s will no longer be eligible for coverage under this permit. The Department may require the *owner or operator* to obtain an individual SPDES permit to continue discharging.

E. Eligibility Under This General Permit

1. This permit may authorize all *discharges* of stormwater from *construction activity* to *surface waters of the State* and *groundwaters* except for ineligible *discharges* identified under subparagraph F. of this Part.

2. Except for non-stormwater *discharges* explicitly listed in the next paragraph, this permit only authorizes stormwater *discharge*s; including stormwater runoff, snowmelt runoff, and surface runoff and drainage, from *construction activities*.

3. Notwithstanding paragraphs E.1 and E.2 above, the following non-stormwater discharges are authorized by this permit: those listed in 6 NYCRR 750-1.2(a)(29)(vi), with the following exception: "Discharges from firefighting activities are authorized only when the firefighting activities are emergencies/unplanned"; waters to which other components have not been added that are used to control dust in accordance with the SWPPP; and uncontaminated *discharge*s from *construction site* de-watering operations. All non-stormwater discharges must be identified in the SWPPP. Under all circumstances, the *owner or operator* must still comply with *water quality standards* in Part I.D of this permit.

4. The *owner or operator* must maintain permit eligibility to *discharge* under this permit. Any *discharges* that are not compliant with the eligibility conditions of this permit are not authorized by the permit and the *owner or operator* must either apply for a separate permit to cover those ineligible *discharges* or take steps necessary to make the *discharge* eligible for coverage.

F. Activities Which Are Ineligible for Coverage Under This General Permit

All of the following are **not** authorized by this permit:

1. *Discharge*s after *construction activities* have been completed and the site has undergone *final stabilization*;

2. *Discharge*s that are mixed with sources of non-stormwater other than those expressly authorized under subsection E.3. of this Part and identified in the SWPPP required by this permit;

3. *Discharges* that are required to obtain an individual SPDES permit or another SPDES general permit pursuant to Part VII.K. of this permit;

4. *Construction activities* or *discharges* from *construction activities* that may adversely affect an *endangered or threatened species* unless the *owner or*

operator has obtained a permit issued pursuant to 6 NYCRR Part 182 for the project or the Department has issued a letter of non-jurisdiction for the project. All documentation necessary to demonstrate eligibility shall be maintained on site in accordance with Part II.D.2 of this permit;

5. *Discharges* which either cause or contribute to a violation of *water quality standards* adopted pursuant to the *ECL* and its accompanying regulations;

6. *Construction activities* for residential, commercial and institutional projects:

   a. Where the *discharge*s from the *construction activities* are tributary to waters of the state classified as AA or AA-s; and

   b. Which are undertaken on land with no existing *impervious cover*; and

   c. Which disturb one (1) or more acres of land designated on the current United States Department of Agriculture ("USDA") Soil Survey as Soil Slope Phase "D", (provided the map unit name is inclusive of slopes greater than 25%), or Soil Slope Phase "E" or "F" (regardless of the map unit name), or a combination of the three designations.

7. *Construction activities* for linear transportation projects and linear utility projects:

   a. Where the *discharge*s from the *construction activities* are tributary to waters of the state classified as AA or AA-s; and

   b. Which are undertaken on land with no existing *impervious cover*; and

   c. Which disturb two (2) or more acres of land designated on the current USDA Soil Survey as Soil Slope Phase "D" (provided the map unit name is inclusive of slopes greater than 25%), or Soil Slope Phase "E" or "F" (regardless of the map unit name), or a combination of the three designations.

8. *Construction activities* that have the potential to affect an *historic property*, unless there is documentation that such impacts have been resolved. The following documentation necessary to demonstrate eligibility with this requirement shall be maintained on site in accordance with Part II.D.2 of this permit and made available to the Department in accordance with Part VII.F of this permit:

   a. Documentation that the *construction activity* is not within an archeologically sensitive area indicated on the sensitivity map, and that the *construction activity* is not located on or immediately adjacent to a property listed or determined to be eligible for listing on the National or State Registers of Historic Places, and that there is no new permanent building on the *construction site* within the following distances from a building, structure, or object that is more than 50 years old, or if there is such a new permanent building on the *construction site* within those parameters that NYS Office of Parks, Recreation and Historic Preservation (OPRHP), a Historic Preservation Commission of a Certified Local Government, or a qualified preservation professional has determined that the building, structure, or object more than 50 years old is not historically/archeologically significant.

      - 1-5 acres of disturbance - 20 feet
      - 5-20 acres of disturbance - 50 feet
      - 20+ acres of disturbance - 100 feet, or

   b. DEC consultation form sent to OPRHP, and copied to the NYS DEC Agency Historic Preservation Officer (APO), and
      (i) the State Environmental Quality Review (SEQR) Environmental Assessment Form (EAF) with a negative declaration or the Findings Statement, with documentation of OPRHP's agreement with the resolution; or
      (ii) documentation from OPRHP that the *construction activity* will result in No Impact; or
      (iii) documentation from OPRHP providing a determination of No Adverse Impact; or
      (iv) a Letter of Resolution signed by the owner/operator, OPRHP and the DEC APO which allows for this *construction activity* to be eligible for coverage under the general permit in terms of the State Historic Preservation Act (SHPA); or

   c. Documentation of satisfactory compliance with Section 106 of the National Historic Preservation Act for a coterminous project area:

(i) No Affect
(ii) No Adverse Affect
(iii) Executed Memorandum of Agreement, or

d. Documentation that:

(i) SHPA Section 14.09 has been completed by NYS DEC or another state agency.

9. *Discharge*s from *construction activities* that are subject to an existing SPDES individual or general permit where a SPDES permit for *construction activity* has been terminated or denied; or where the *owner or operator* has failed to renew an expired individual permit.

Part II. PERMIT COVERAGE

A. How to Obtain Coverage

1. An *owner or operator* of a *construction activity* that is not subject to the requirements of a regulated, traditional land use control MS4 must first prepare a SWPPP in accordance with all applicable requirements of this permit and then submit a completed Notice of Intent (NOI) to the Department to be authorized to discharge under this permit.

2. An *owner or operator* of a *construction activity* that is subject to the requirements of a *regulated, traditional land use control MS4* must first prepare a SWPPP in accordance with all applicable requirements of this permit and then have the SWPPP reviewed and accepted by the *regulated, traditional land use control MS4* prior to submitting the NOI to the Department. The *owner or operator* shall have the "MS4 SWPPP Acceptance" form signed in accordance with Part VII.H., and then submit that form along with a completed NOI to the Department.

3. The requirement for an *owner or operator* to have its SWPPP reviewed and accepted by the *regulated, traditional land use control MS4* prior to submitting the NOI to the Department does not apply to an *owner or operator* that is obtaining permit coverage in accordance with the requirements in Part II.F. (Change of *Owner or Operator*) or where the *owner or operator* of the *construction activity* is the *regulated, traditional land use control MS4* . This exemption does not apply to *construction activities* subject to the New York City Administrative Code.

B. Notice of Intent (NOI) Submittal

1. Prior to December 21, 2020, an owner or operator shall use either the electronic (eNOI) or paper version of the NOI that the Department prepared. Both versions of the NOI are located on the Department's website (http://www.dec.ny.gov/). The paper version of the NOI shall be signed in accordance with Part VII.H. of this permit and submitted to the following address:

   NOTICE OF INTENT
   NYS DEC, Bureau of Water Permits
   625 Broadway, 4th Floor
   Albany, New York 12233-3505

2. Beginning December 21, 2020 and in accordance with EPA's 2015 NPDES Electronic Reporting Rule (40 CFR Part 127), the *owner or operator* must submit the NOI electronically using the *Department's* online NOI.

3. The *owner or operator* shall have the SWPPP preparer sign the "SWPPP Preparer Certification" statement on the NOI prior to submitting the form to the Department.

4. As of the date the NOI is submitted to the Department, the *owner or operator* shall make the NOI and SWPPP available for review and copying in accordance with the requirements in Part VII.F. of this permit.

C. Permit Authorization

1. An *owner or operator* shall not *commence construction activity* until their authorization to *discharge* under this permit goes into effect.

2. Authorization to *discharge* under this permit will be effective when the *owner or operator* has satisfied all of the following criteria:

   a. project review pursuant to the State Environmental Quality Review Act ("SEQRA") have been satisfied, when SEQRA is applicable. See the Department's website (http://www.dec.ny.gov/) for more information,

   b. where required, all necessary Department permits subject to the *Uniform Procedures Act ("UPA")* (see 6 NYCRR Part 621), or the equivalent from another New York State agency, have been obtained, unless otherwise notified by the Department pursuant to 6 NYCRR 621.3(a)(4). *Owners or operators* of *construction activities* that are required to obtain *UPA* permits

must submit a preliminary SWPPP to the appropriate DEC Permit Administrator at the Regional Office listed in Appendix F at the time all other necessary *UPA* permit applications are submitted. The preliminary SWPPP must include sufficient information to demonstrate that the *construction activity* qualifies for authorization under this permit,

c. the final SWPPP has been prepared, and

d. a complete NOI has been submitted to the Department in accordance with the requirements of this permit.

3. An *owner or operator* that has satisfied the requirements of Part II.C.2 above will be authorized to *discharge* stormwater from their *construction activity* in accordance with the following schedule:

   a. For *construction activities* that are not subject to the requirements of a *regulated, traditional land use control MS4*:

      (i) Five (5) business days from the date the Department receives a complete electronic version of the NOI (eNOI) for *construction activities* with a SWPPP that has been prepared in conformance with the design criteria in the technical standard referenced in Part III.B.1 and the *performance criteria* in the technical standard referenced in Parts III.B., 2 or 3, for *construction activities* that require post-construction stormwater management practices pursuant to Part III.C.; or

      (ii) Sixty (60) business days from the date the Department receives a complete NOI (electronic or paper version) for *construction activities* with a SWPPP that has not been prepared in conformance with the design criteria in technical standard referenced in Part III.B.1. or, for *construction activities* that require post-construction stormwater management practices pursuant to Part III.C., the *performance criteria* in the technical standard referenced in Parts III.B., 2 or 3, or;

      (iii) Ten (10) business days from the date the Department receives a complete paper version of the NOI for *construction activities* with a SWPPP that has been prepared in conformance with the design criteria in the technical standard referenced in Part III.B.1 and the *performance criteria* in the technical standard referenced in Parts III.B., 2 or 3, for *construction activities* that require post-construction stormwater management practices pursuant to Part III.C.

b. For *construction activities* that are subject to the requirements of a *regulated, traditional land use control MS4*:

(i) Five (5) business days from the date the Department receives both a complete electronic version of the NOI (eNOI) and signed "*MS4* SWPPP Acceptance" form, or

(ii) Ten (10) business days from the date the Department receives both a complete paper version of the NOI and signed "MS4 SWPPP Acceptance" form.

4. Coverage under this permit authorizes stormwater *discharges* from only those areas of disturbance that are identified in the NOI. If an *owner or operator* wishes to have stormwater *discharges* from future or additional areas of disturbance authorized, they must submit a new NOI that addresses that phase of the development, unless otherwise notified by the Department. The *owner or operator* shall not *commence construction activity* on the future or additional areas until their authorization to *discharge* under this permit goes into effect in accordance with Part II.C. of this permit.

D. General Requirements For Owners or Operators With Permit Coverage

1. The *owner or operator* shall ensure that the provisions of the SWPPP are implemented from the *commencement of construction activity* until all areas of disturbance have achieved *final stabilization* and the Notice of Termination ("NOT") has been submitted to the Department in accordance with Part V. of this permit. This includes any changes made to the SWPPP pursuant to Part III.A.4. of this permit.

2. The *owner or operator* shall maintain a copy of the General Permit (GP-0-20-001), NOI, *NOI Acknowledgment Letter*, SWPPP, MS4 SWPPP Acceptance form, inspection reports, responsible contractor's or subcontractor's certification statement (see Part III.A.6.), and all documentation necessary to demonstrate eligibility with this permit at the *construction site* until all disturbed areas have achieved *final stabilization* and the NOT has been submitted to the Department. The documents must be maintained in a secure location, such as a job trailer, on-site construction office, or mailbox with lock. The secure location must be accessible during normal business hours to an individual performing a compliance inspection.

3. The *owner or operator* of a *construction activity* shall not disturb greater than five (5) acres of soil at any one time without prior written authorization from the Department or, in areas under the jurisdiction of a *regulated, traditional land*

use control MS4, the *regulated, traditional land use control MS4* (provided the *regulated, traditional land use control MS4* is not the *owner or operator* of the *construction activity*). At a minimum, the *owner or operator* must comply with the following requirements in order to be authorized to disturb greater than five (5) acres of soil at any one time:

a. The *owner or operator* shall have a *qualified inspector* conduct **at least** two (2) site inspections in accordance with Part IV.C. of this permit every seven (7) calendar days, for as long as greater than five (5) acres of soil remain disturbed. The two (2) inspections shall be separated by a minimum of two (2) full calendar days.

b. In areas where soil disturbance activity has temporarily or permanently ceased, the application of soil stabilization measures must be initiated by the end of the next business day and completed within seven (7) days from the date the current soil disturbance activity ceased. The soil stabilization measures selected shall be in conformance with the technical standard, New York State Standards and Specifications for Erosion and Sediment Control, dated November 2016.

c. The *owner or operator* shall prepare a phasing plan that defines maximum disturbed area per phase and shows required cuts and fills.

d. The *owner or operator* shall install any additional site-specific practices needed to protect water quality.

e. The *owner or operator* shall include the requirements above in their SWPPP.

4. In accordance with statute, regulations, and the terms and conditions of this permit, the Department may suspend or revoke an *owner's or operator's* coverage under this permit at any time if the Department determines that the SWPPP does not meet the permit requirements or consistent with Part VII.K..

5. Upon a finding of significant non-compliance with the practices described in the SWPPP or violation of this permit, the Department may order an immediate stop to all activity at the site until the non-compliance is remedied. The stop work order shall be in writing, describe the non-compliance in detail, and be sent to the *owner or operator*.

6. For *construction activities* that are subject to the requirements of a *regulated, traditional land use control MS4*, the *owner or operator* shall notify the

regulated, traditional land use control MS4 in writing of any planned amendments or modifications to the post-construction stormwater management practice component of the SWPPP required by Part III.A. 4. and 5. of this permit. Unless otherwise notified by the *regulated, traditional land use control MS4*, the *owner or operator* shall have the SWPPP amendments or modifications reviewed and accepted by the *regulated, traditional land use control MS4* prior to commencing construction of the post-construction stormwater management practice.

E. Permit Coverage for Discharges Authorized Under GP-0-15-002

1. Upon renewal of SPDES General Permit for Stormwater Discharges from *Construction Activity* (Permit No. GP-0-15-002), an *owner or operator* of *a construction activity* with coverage under GP-0-15-002, as of the effective date of GP- 0-20-001, shall be authorized to *discharge* in accordance with GP- 0-20-001, unless otherwise notified by the Department.

   An *owner or operator* may continue to implement the technical/design components of the post-construction stormwater management controls provided that such design was done in conformance with the technical standards in place at the time of initial project authorization. However, they must comply with the other, non-design provisions of GP-0-20-001.

F. Change of Owner or Operator

1. When property ownership changes or when there is a change in operational control over the construction plans and specifications, the original *owner or operator* must notify the new *owner or operator*, in writing, of the requirement to obtain permit coverage by submitting a NOI with the Department. For *construction activities* subject to the requirements of a *regulated, traditional land use control MS4,* the original *owner or operator* must also notify the MS4, in writing, of the change in ownership at least 30 calendar days prior to the change in ownership.

2. Once the new *owner or operator* obtains permit coverage, the original *owner or operator* shall then submit a completed NOT with the name and permit identification number of the new *owner or operator* to the Department at the address in Part II.B.1. of this permit. If the original *owner or operator* maintains ownership of a portion of the *construction activity* and will disturb soil, they must maintain their coverage under the permit.

3. Permit coverage for the new *owner or operator* will be effective as of the date the Department receives a complete NOI, provided the original *owner or*

operator was not subject to a sixty (60) business day authorization period that has not expired as of the date the Department receives the NOI from the new *owner or operator*.

Part III. STORMWATER POLLUTION PREVENTION PLAN (SWPPP)

A. General SWPPP Requirements

1. A SWPPP shall be prepared and implemented by the *owner or operator* of each *construction activity* covered by this permit. The SWPPP must document the selection, design, installation, implementation and maintenance of the control measures and practices that will be used to meet the effluent limitations in Part I.B. of this permit and where applicable, the post-construction stormwater management practice requirements in Part I.C. of this permit. The SWPPP shall be prepared prior to the submittal of the NOI. The NOI shall be submitted to the Department prior to the *commencement of construction activity*. A copy of the completed, final NOI shall be included in the SWPPP.

2. The SWPPP shall describe the erosion and sediment control practices and where required, post-construction stormwater management practices that will be used and/or constructed to reduce the *pollutants* in stormwater *discharges* and to assure compliance with the terms and conditions of this permit. In addition, the SWPPP shall identify potential sources of pollution which may reasonably be expected to affect the quality of stormwater *discharges*.

3. All SWPPPs that require the post-construction stormwater management practice component shall be prepared by a *qualified professional* that is knowledgeable in the principles and practices of stormwater management and treatment.

4. The *owner or operator* must keep the SWPPP current so that it at all times accurately documents the erosion and sediment controls practices that are being used or will be used during construction, and all post-construction stormwater management practices that will be constructed on the site. At a minimum, the *owner or operator* shall amend the SWPPP, including construction drawings:

    a. whenever the current provisions prove to be ineffective in minimizing *pollutants* in stormwater *discharges* from the site;

b. whenever there is a change in design, construction, or operation at the *construction site* that has or could have an effect on the *discharge* of *pollutants*;

c. to address issues or deficiencies identified during an inspection by the *qualified inspector,* the Department or other regulatory authority; and

d. to document the final construction conditions.

5. The Department may notify the *owner or operator* at any time that the SWPPP does not meet one or more of the minimum requirements of this permit. The notification shall be in writing and identify the provisions of the SWPPP that require modification. Within fourteen (14) calendar days of such notification, or as otherwise indicated by the Department, the *owner or operator* shall make the required changes to the SWPPP and submit written notification to the Department that the changes have been made. If the *owner or operator* does not respond to the Department's comments in the specified time frame, the Department may suspend the *owner's or operator's* coverage under this permit or require the *owner or operator* to obtain coverage under an individual SPDES permit in accordance with Part II.D.4. of this permit.

6. Prior to the *commencement of construction activity*, the *owner or operator* must identify the contractor(s) and subcontractor(s) that will be responsible for installing, constructing, repairing, replacing, inspecting and maintaining the erosion and sediment control practices included in the SWPPP; and the contractor(s) and subcontractor(s) that will be responsible for constructing the post-construction stormwater management practices included in the SWPPP. The *owner or operator* shall have each of the contractors and subcontractors identify at least one person from their company that will be responsible for implementation of the SWPPP. This person shall be known as the *trained contractor.* The *owner or operator* shall ensure that at least one *trained contractor* is on site on a daily basis when soil disturbance activities are being performed.

   The *owner or operator* shall have each of the contractors and subcontractors identified above sign a copy of the following certification statement below before they commence any *construction activity*:

   "I hereby certify under penalty of law that I understand and agree to comply with the terms and conditions of the SWPPP and agree to implement any corrective actions identified by the *qualified inspector* during a site inspection. I also understand that the *owner or operator* must comply with

the terms and conditions of the most current version of the New York State Pollutant Discharge Elimination System ("SPDES") general permit for stormwater *discharge*s from *construction activities* and that it is unlawful for any person to cause or contribute to a violation of *water quality standards*. Furthermore, I am aware that there are significant penalties for submitting false information, that I do not believe to be true, including the possibility of fine and imprisonment for knowing violations"

In addition to providing the certification statement above, the certification page must also identify the specific elements of the SWPPP that each contractor and subcontractor will be responsible for and include the name and title of the person providing the signature; the name and title of the *trained contractor* responsible for SWPPP implementation; the name, address and telephone number of the contracting firm; the address (or other identifying description) of the site; and the date the certification statement is signed. The *owner or operator* shall attach the certification statement(s) to the copy of the SWPPP that is maintained at the *construction site*. If new or additional contractors are hired to implement measures identified in the SWPPP after construction has commenced, they must also sign the certification statement and provide the information listed above.

7. For projects where the Department requests a copy of the SWPPP or inspection reports, the *owner or operator* shall submit the documents in both electronic (PDF only) and paper format within five (5) business days, unless otherwise notified by the Department.

B. Required SWPPP Contents

1. Erosion and sediment control component - All SWPPPs prepared pursuant to this permit shall include erosion and sediment control practices designed in conformance with the technical standard, New York State Standards and Specifications for Erosion and Sediment Control, dated November 2016. Where erosion and sediment control practices are not designed in conformance with the design criteria included in the technical standard, the *owner or operator* must demonstrate *equivalence* to the technical standard. At a minimum, the erosion and sediment control component of the SWPPP shall include the following:

    a. Background information about the scope of the project, including the location, type and size of project

b. A site map/construction drawing(s) for the project, including a general location map. At a minimum, the site map shall show the total site area; all improvements; areas of disturbance; areas that will not be disturbed; existing vegetation; on-site and adjacent off-site surface water(s); floodplain/floodway boundaries; wetlands and drainage patterns that could be affected by the *construction activity*; existing and final contours ; locations of different soil types with boundaries; material, waste, borrow or equipment storage areas located on adjacent properties; and location(s) of the stormwater *discharge*(s);

c. A description of the soil(s) present at the site, including an identification of the Hydrologic Soil Group (HSG);

d. A construction phasing plan and sequence of operations describing the intended order of *construction activities*, including clearing and grubbing, excavation and grading, utility and infrastructure installation and any other activity at the site that results in soil disturbance;

e. A description of the minimum erosion and sediment control practices to be installed or implemented for each *construction activity* that will result in soil disturbance. Include a schedule that identifies the timing of initial placement or implementation of each erosion and sediment control practice and the minimum time frames that each practice should remain in place or be implemented;

f. A temporary and permanent soil stabilization plan that meets the requirements of this general permit and the technical standard, New York State Standards and Specifications for Erosion and Sediment Control, dated November 2016, for each stage of the project, including initial land clearing and grubbing to project completion and achievement of *final stabilization*;

g. A site map/construction drawing(s) showing the specific location(s), size(s), and length(s) of each erosion and sediment control practice;

h. The dimensions, material specifications, installation details, and operation and maintenance requirements for all erosion and sediment control practices. Include the location and sizing of any temporary sediment basins and structural practices that will be used to divert flows from exposed soils;

i. A maintenance inspection schedule for the contractor(s) identified in Part III.A.6. of this permit, to ensure continuous and effective operation of the erosion and sediment control practices. The maintenance inspection

schedule shall be in accordance with the requirements in the technical standard, New York State Standards and Specifications for Erosion and Sediment Control, dated November 2016;

j. A description of the pollution prevention measures that will be used to control litter, construction chemicals and construction debris from becoming a *pollutant* source in the stormwater *discharges*;

k. A description and location of any stormwater *discharges* associated with industrial activity other than construction at the site, including, but not limited to, stormwater *discharges* from asphalt plants and concrete plants located on the *construction site*; and

l. Identification of any elements of the design that are not in conformance with the design criteria in the technical standard, New York State Standards and Specifications for Erosion and Sediment Control, dated November 2016. Include the reason for the deviation or alternative design and provide information which demonstrates that the deviation or alternative design is *equivalent* to the technical standard.

2. Post-construction stormwater management practice component – The *owner or operator* of any construction project identified in Table 2 of Appendix B as needing post-construction stormwater management practices shall prepare a SWPPP that includes practices designed in conformance with the applicable *sizing criteria* in Part I.C.2.a., c. or d. of this permit and the *performance criteria* in the technical standard, New York State Stormwater Management Design Manual dated January 2015

   Where post-construction stormwater management practices are not designed in conformance with the *performance criteria* in the technical standard, the *owner or operator* must include in the SWPPP the reason(s) for the deviation or alternative design and provide information which demonstrates that the deviation or alternative design is *equivalent* to the technical standard.

   The post-construction stormwater management practice component of the SWPPP shall include the following:

   a. Identification of all post-construction stormwater management practices to be constructed as part of the project. Include the dimensions, material specifications and installation details for each post-construction stormwater management practice;

b. A site map/construction drawing(s) showing the specific location and size of each post-construction stormwater management practice;

c. A Stormwater Modeling and Analysis Report that includes:
   (i) Map(s) showing pre-development conditions, including watershed/subcatchments boundaries, flow paths/routing, and design points;

   (ii) Map(s) showing post-development conditions, including watershed/subcatchments boundaries, flow paths/routing, design points and post-construction stormwater management practices;

   (iii) Results of stormwater modeling (i.e. hydrology and hydraulic analysis) for the required storm events. Include supporting calculations (model runs), methodology, and a summary table that compares pre and post-development runoff rates and volumes for the different storm events;

   (iv) Summary table, with supporting calculations, which demonstrates that each post-construction stormwater management practice has been designed in conformance with the *sizing criteria* included in the Design Manual;

   (v) Identification of any *sizing criteria* that is not required based on the requirements included in Part I.C. of this permit; and

   (vi) Identification of any elements of the design that are not in conformance with the *performance criteria* in the Design Manual. Include the reason(s) for the deviation or alternative design and provide information which demonstrates that the deviation or alternative design is *equivalent* to the Design Manual;

d. Soil testing results and locations (test pits, borings);

e. Infiltration test results, when required; and

f. An operations and maintenance plan that includes inspection and maintenance schedules and actions to ensure continuous and effective operation of each post-construction stormwater management practice. The plan shall identify the entity that will be responsible for the long term operation and maintenance of each practice.

3. Enhanced Phosphorus Removal Standards - All construction projects identified in Table 2 of Appendix B that are located in the watersheds identified in Appendix C shall prepare a SWPPP that includes post-construction stormwater management practices designed in conformance with the applicable *sizing criteria* in Part I.C.2. b., c. or d. of this permit and the *performance criteria,* Enhanced Phosphorus Removal Standards included in the Design Manual. At a minimum, the post-construction stormwater management practice component of the SWPPP shall include items 2.a - 2.f. above.

C. Required SWPPP Components by Project Type

Unless otherwise notified by the Department, *owners or operators* of *construction activities* identified in Table 1 of Appendix B are required to prepare a SWPPP that only includes erosion and sediment control practices designed in conformance with Part III.B.1 of this permit. *Owners or operators* of the *construction activities* identified in Table 2 of Appendix B shall prepare a SWPPP that also includes post-construction stormwater management practices designed in conformance with Part III.B.2 or 3 of this permit.

Part IV. INSPECTION AND MAINTENANCE REQUIREMENTS

A. General Construction Site Inspection and Maintenance Requirements

1. The *owner or operator* must ensure that all erosion and sediment control practices (including pollution prevention measures) and all post-construction stormwater management practices identified in the SWPPP are inspected and maintained in accordance with Part IV.B. and C. of this permit.

2. The terms of this permit shall not be construed to prohibit the State of New York from exercising any authority pursuant to the ECL, common law or federal law, or prohibit New York State from taking any measures, whether civil or criminal, to prevent violations of the laws of the State of New York or protect the public health and safety and/or the environment.

B. Contractor Maintenance Inspection Requirements

1. The *owner or operator* of each *construction activity* identified in Tables 1 and 2 of Appendix B shall have a *trained contractor* inspect the erosion and sediment control practices and pollution prevention measures being implemented within the active work area daily to ensure that they are being maintained in effective operating condition at all times. If deficiencies are identified, the contractor shall

begin implementing corrective actions within one business day and shall complete the corrective actions in a reasonable time frame.

2. For construction sites where soil disturbance activities have been temporarily suspended (e.g. winter shutdown) and *temporary stabilization* measures have been applied to all disturbed areas, the *trained contractor* can stop conducting the maintenance inspections. The *trained contractor* shall begin conducting the maintenance inspections in accordance with Part IV.B.1. of this permit as soon as soil disturbance activities resume.

3. For construction sites where soil disturbance activities have been shut down with partial project completion, the *trained contractor* can stop conducting the maintenance inspections if all areas disturbed as of the project shutdown date have achieved *final stabilization* and all post-construction stormwater management practices required for the completed portion of the project have been constructed in conformance with the SWPPP and are operational.

C. Qualified Inspector Inspection Requirements

The *owner or operator* shall have a *qualified inspector* conduct site inspections in conformance with the following requirements:

[Note: The *trained contractor* identified in Part III.A.6. and IV.B. of this permit **cannot** conduct the *qualified inspector* site inspections unless they meet the *qualified inspector* qualifications included in Appendix A. In order to perform these inspections, the *trained contractor* would have to be a:

- licensed Professional Engineer,
- Certified Professional in Erosion and Sediment Control (CPESC),
- New York State Erosion and Sediment Control Certificate Program holder
- Registered Landscape Architect, or
- someone working under the direct supervision of, and at the same company as, the licensed Professional Engineer or Registered Landscape Architect, provided they have received four (4) hours of Department endorsed training in proper erosion and sediment control principles from a Soil and Water Conservation District, or other Department endorsed entity].

1. A *qualified inspector* shall conduct site inspections for all *construction activities* identified in Tables 1 and 2 of Appendix B, with the exception of:

   a. the construction of a single family residential subdivision with 25% or less *impervious cover* at total site build-out that involves a soil disturbance of one (1) or more acres of land but less than five (5) acres and is not located

in one of the watersheds listed in Appendix C and not directly discharging to one of the 303(d) segments listed in Appendix E;

b. the construction of a single family home that involves a soil disturbance of one (1) or more acres of land but less than five (5) acres and is not located in one of the watersheds listed in Appendix C and not directly discharging to one of the 303(d) segments listed in Appendix E;

c. construction on agricultural property that involves a soil disturbance of one (1) or more acres of land but less than five (5) acres; and

d. *construction activities* located in the watersheds identified in Appendix D that involve soil disturbances between five thousand (5,000) square feet and one (1) acre of land.

2. Unless otherwise notified by the Department, the *qualified inspector* shall conduct site inspections in accordance with the following timetable:

a. For construction sites where soil disturbance activities are on-going, the *qualified inspector* shall conduct a site inspection at least once every seven (7) calendar days.

b. For construction sites where soil disturbance activities are on-going and the *owner or operator* has received authorization in accordance with Part II.D.3 to disturb greater than five (5) acres of soil at any one time, the *qualified inspector* shall conduct at least two (2) site inspections every seven (7) calendar days. The two (2) inspections shall be separated by a minimum of two (2) full calendar days.

c. For construction sites where soil disturbance activities have been temporarily suspended (e.g. winter shutdown) and *temporary stabilization* measures have been applied to all disturbed areas, the *qualified inspector* shall conduct a site inspection at least once every thirty (30) calendar days. The *owner or operator* shall notify the DOW Water (SPDES) Program contact at the Regional Office (see contact information in Appendix F) or, in areas under the jurisdiction of a *regulated, traditional land use control MS4,* the *regulated, traditional land use control MS4* (provided the *regulated, traditional land use control MS4* is not the *owner or operator* of the *construction activity*) in writing prior to reducing the frequency of inspections.

d. For construction sites where soil disturbance activities have been shut down with partial project completion, the *qualified inspector* can stop conducting inspections if all areas disturbed as of the project shutdown date have achieved *final stabilization* and all post-construction stormwater management practices required for the completed portion of the project have been constructed in conformance with the SWPPP and are operational. The *owner or operator* shall notify the DOW Water (SPDES) Program contact at the Regional Office (see contact information in Appendix F) or, in areas under the jurisdiction of a *regulated, traditional land use control MS4,* the *regulated, traditional land use control MS4* (provided the *regulated, traditional land use control MS4* is not the *owner or operator* of the *construction activity*) in writing prior to the shutdown. If soil disturbance activities are not resumed within 2 years from the date of shutdown, the *owner or operator* shall have the *qualified inspector* perform a final inspection and certify that all disturbed areas have achieved *final stabilization,* and all temporary, structural erosion and sediment control measures have been removed*;* and that all post-construction stormwater management practices have been constructed in conformance with the SWPPP by signing the "*Final Stabilization*" and "Post-Construction Stormwater Management Practice" certification statements on the NOT. The *owner or operator* shall then submit the completed NOT form to the address in Part II.B.1 of this permit.

e. For construction sites that directly *discharge* to one of the 303(d) segments listed in Appendix E or is located in one of the watersheds listed in Appendix C, the *qualified inspector* shall conduct at least two (2) site inspections every seven (7) calendar days. The two (2) inspections shall be separated by a minimum of two (2) full calendar days.

3. At a minimum, the *qualified inspector* shall inspect all erosion and sediment control practices and pollution prevention measures to ensure integrity and effectiveness, all post-construction stormwater management practices under construction to ensure that they are constructed in conformance with the SWPPP, all areas of disturbance that have not achieved *final stabilization,* all points of *discharge* to natural surface waterbodies located within, or immediately adjacent to, the property boundaries of the *construction site*, and all points of *discharge* from the *construction site*.

4. The *qualified inspector* shall prepare an inspection report subsequent to each and every inspection. At a minimum, the inspection report shall include and/or address the following:

a. Date and time of inspection;

b. Name and title of person(s) performing inspection;

c. A description of the weather and soil conditions (e.g. dry, wet, saturated) at the time of the inspection;

d. A description of the condition of the runoff at all points of *discharge* from the *construction site*. This shall include identification of any *discharges* of sediment from the *construction site*. Include *discharges* from conveyance systems (i.e. pipes, culverts, ditches, etc.) and overland flow;

e. A description of the condition of all natural surface waterbodies located within, or immediately adjacent to, the property boundaries of the *construction site* which receive runoff from disturbed areas. This shall include identification of any *discharges* of sediment to the surface waterbody;

f. Identification of all erosion and sediment control practices and pollution prevention measures that need repair or maintenance;

g. Identification of all erosion and sediment control practices and pollution prevention measures that were not installed properly or are not functioning as designed and need to be reinstalled or replaced;

h. Description and sketch of areas with active soil disturbance activity, areas that have been disturbed but are inactive at the time of the inspection, and areas that have been stabilized (temporary and/or final) since the last inspection;

i. Current phase of construction of all post-construction stormwater management practices and identification of all construction that is not in conformance with the SWPPP and technical standards;

j. Corrective action(s) that must be taken to install, repair, replace or maintain erosion and sediment control practices and pollution prevention measures; and to correct deficiencies identified with the construction of the post-construction stormwater management practice(s);

k. Identification and status of all corrective actions that were required by previous inspection; and

l. Digital photographs, with date stamp, that clearly show the condition of all practices that have been identified as needing corrective actions. The *qualified inspector* shall attach paper color copies of the digital photographs to the inspection report being maintained onsite within seven (7) calendar days of the date of the inspection. The *qualified inspector* shall also take digital photographs, with date stamp, that clearly show the condition of the practice(s) after the corrective action has been completed. The *qualified inspector* shall attach paper color copies of the digital photographs to the inspection report that documents the completion of the corrective action work within seven (7) calendar days of that inspection.

5. Within one business day of the completion of an inspection, the *qualified inspector* shall notify the *owner or operator* and appropriate contractor or subcontractor identified in Part III.A.6. of this permit of any corrective actions that need to be taken. The contractor or subcontractor shall begin implementing the corrective actions within one business day of this notification and shall complete the corrective actions in a reasonable time frame.

6. All inspection reports shall be signed by the *qualified inspector.* Pursuant to Part II.D.2. of this permit, the inspection reports shall be maintained on site with the SWPPP.

Part V. TERMINATION OF PERMIT COVERAGE

A. Termination of Permit Coverage

1. An *owner or operator* that is eligible to terminate coverage under this permit must submit a completed NOT form to the address in Part II.B.1 of this permit. The NOT form shall be one which is associated with this permit, signed in accordance with Part VII.H of this permit.

2. An *owner or operator* may terminate coverage when one or more the following conditions have been met:

   a. Total project completion - All *construction activity* identified in the SWPPP has been completed; and all areas of disturbance have achieved *final stabilization*; and all temporary, structural erosion and sediment control measures have been removed; and all post-construction stormwater management practices have been constructed in conformance with the SWPPP and are operational;

b. Planned shutdown with partial project completion - All soil disturbance activities have ceased; and all areas disturbed as of the project shutdown date have achieved *final stabilization*; and all temporary, structural erosion and sediment control measures have been removed; and all post-construction stormwater management practices required for the completed portion of the project have been constructed in conformance with the SWPPP and are operational;

c. A new *owner or operator* has obtained coverage under this permit in accordance with Part II.F. of this permit.

d. The *owner or operator* obtains coverage under an alternative SPDES general permit or an individual SPDES permit.

3. For *construction activities* meeting subdivision 2a. or 2b. of this Part, the *owner or operator* shall have the *qualified inspector* perform a final site inspection prior to submitting the NOT. The *qualified inspector* shall, by signing the "*Final Stabilization*" and "Post-Construction Stormwater Management Practice certification statements on the NOT, certify that all the requirements in Part V.A.2.a. or b. of this permit have been achieved.

4. For *construction activities* that are subject to the requirements of a *regulated, traditional land use control MS4* and meet subdivision 2a. or 2b. of this Part, the *owner or operator* shall have the *regulated, traditional land use control MS4* sign the "MS4 Acceptance" statement on the NOT in accordance with the requirements in Part VII.H. of this permit. The *regulated, traditional land use control MS4* official, by signing this statement, has determined that it is acceptable for the *owner or operator* to submit the NOT in accordance with the requirements of this Part. The *regulated, traditional land use control MS4* can make this determination by performing a final site inspection themselves or by accepting the *qualified inspector*'s final site inspection certification(s) required in Part V.A.3. of this permit.

5. For *construction activities* that require post-construction stormwater management practices and meet subdivision 2a. of this Part, the *owner or operator* must, prior to submitting the NOT, ensure one of the following:

a. the post-construction stormwater management practice(s) and any right-of-way(s) needed to maintain such practice(s) have been deeded to the municipality in which the practice(s) is located,

b. an executed maintenance agreement is in place with the municipality that will maintain the post-construction stormwater management practice(s),

c. for post-construction stormwater management practices that are privately owned, the *owner or operator* has a mechanism in place that requires operation and maintenance of the practice(s) in accordance with the operation and maintenance plan, such as a deed covenant in the *owner or operator's* deed of record,

d. for post-construction stormwater management practices that are owned by a public or private institution (e.g. school, university, hospital), government agency or authority, or public utility; the *owner or operator* has policy and procedures in place that ensures operation and maintenance of the practices in accordance with the operation and maintenance plan.

Part VI. REPORTING AND RETENTION RECORDS

A. Record Retention

The *owner or operator* shall retain a copy of the NOI, NOI Acknowledgment Letter, SWPPP, MS4 SWPPP Acceptance form and any inspection reports that were prepared in conjunction with this permit for a period of at least five (5) years from the date that the Department receives a complete NOT submitted in accordance with Part V. of this general permit.

B. Addresses

With the exception of the NOI, NOT, and MS4 SWPPP Acceptance form (which must be submitted to the address referenced in Part II.B.1 of this permit), all written correspondence requested by the Department, including individual permit applications, shall be sent to the address of the appropriate DOW Water (SPDES) Program contact at the Regional Office listed in Appendix F.

Part VII. STANDARD PERMIT CONDITIONS

A. Duty to Comply

The *owner or operator* must comply with all conditions of this permit. All contractors and subcontractors associated with the project must comply with the terms of the SWPPP. Any non-compliance with this permit constitutes a violation of the Clean Water

Act (CWA) and the ECL and is grounds for an enforcement action against the *owner or operator* and/or the contractor/subcontractor; permit revocation, suspension or modification; or denial of a permit renewal application. Upon a finding of significant non-compliance with this permit or the applicable SWPPP, the Department may order an immediate stop to all *construction activity* at the site until the non-compliance is remedied. The stop work order shall be in writing, shall describe the non-compliance in detail, and shall be sent to the *owner or operator*.

If any human remains or archaeological remains are encountered during excavation, the *owner or operator* must immediately cease, or cause to cease, all *construction activity* in the area of the remains and notify the appropriate Regional Water Engineer (RWE). *Construction activity* shall not resume until written permission to do so has been received from the RWE.

B. Continuation of the Expired General Permit

This permit expires five (5) years from the effective date. If a new general permit is not issued prior to the expiration of this general permit, an *owner or operator* with coverage under this permit may continue to operate and *discharge* in accordance with the terms and conditions of this general permit, if it is extended pursuant to the State Administrative Procedure Act and 6 NYCRR Part 621, until a new general permit is issued.

C. Enforcement

Failure of the *owner or operator,* its contractors, subcontractors, agents and/or assigns to strictly adhere to any of the permit requirements contained herein shall constitute a violation of this permit. There are substantial criminal, civil, and administrative penalties associated with violating the provisions of this permit. Fines of up to $37,500 per day for each violation and imprisonment for up to fifteen (15) years may be assessed depending upon the nature and degree of the offense.

D. Need to Halt or Reduce Activity Not a Defense

It shall not be a defense for an *owner or operator* in an enforcement action that it would have been necessary to halt or reduce the *construction activity* in order to maintain compliance with the conditions of this permit.

E. Duty to Mitigate

The *owner or operator* and its contractors and subcontractors shall take all reasonable steps to *minimize* or prevent any *discharge* in violation of this permit which has a reasonable likelihood of adversely affecting human health or the environment.

F. Duty to Provide Information

The *owner or operator* shall furnish to the Department, within a reasonable specified time period of a written request, all documentation necessary to demonstrate eligibility and any information to determine compliance with this permit or to determine whether cause exists for modifying or revoking this permit, or suspending or denying coverage under this permit, in accordance with the terms and conditions of this permit. The NOI, SWPPP and inspection reports required by this permit are public documents that the *owner or operator* must make available for review and copying by any person within five (5) business days of the *owner or operator* receiving a written request by any such person to review these documents. Copying of documents will be done at the requester's expense.

G. Other Information

When the *owner or operator* becomes aware that they failed to submit any relevant facts, or submitted incorrect information in the NOI or in any of the documents required by this permit , or have made substantive revisions to the SWPPP (e.g. the scope of the project changes significantly, the type of post-construction stormwater management practice(s) changes, there is a reduction in the sizing of the post-construction stormwater management practice, or there is an increase in the disturbance area or *impervious area*), which were not reflected in the original NOI submitted to the Department, they shall promptly submit such facts or information to the Department using the contact information in Part II.A. of this permit. Failure of the *owner or operator* to correct or supplement any relevant facts within five (5) business days of becoming aware of the deficiency shall constitute a violation of this permit.

H. Signatory Requirements

1. All NOIs and NOTs shall be signed as follows:

    a. For a corporation these forms shall be signed by a responsible corporate officer. For the purpose of this section, a responsible corporate officer means:

(i) a president, secretary, treasurer, or vice-president of the corporation in charge of a principal business function, or any other person who performs similar policy or decision-making functions for the corporation; or

(ii) the manager of one or more manufacturing, production or operating facilities, provided the manager is authorized to make management decisions which govern the operation of the regulated facility including having the explicit or implicit duty of making major capital investment recommendations, and initiating and directing other comprehensive measures to assure long term environmental compliance with environmental laws and regulations; the manager can ensure that the necessary systems are established or actions taken to gather complete and accurate information for permit application requirements; and where authority to sign documents has been assigned or delegated to the manager in accordance with corporate procedures;

b. For a partnership or sole proprietorship these forms shall be signed by a general partner or the proprietor, respectively; or

c. For a municipality, State, Federal, or other public agency these forms shall be signed by either a principal executive officer or ranking elected official. For purposes of this section, a principal executive officer of a Federal agency includes:

(i) the chief executive officer of the agency, or

(ii) a senior executive officer having responsibility for the overall operations of a principal geographic unit of the agency (e.g., Regional Administrators of EPA).

2. The SWPPP and other information requested by the Department shall be signed by a person described in Part VII.H.1. of this permit or by a duly authorized representative of that person. A person is a duly authorized representative only if:

a. The authorization is made in writing by a person described in Part VII.H.1. of this permit;

b. The authorization specifies either an individual or a position having responsibility for the overall operation of the regulated facility or activity, such as the position of plant manager, operator of a well or a well field,

superintendent, position of *equivalent* responsibility, or an individual or position having overall responsibility for environmental matters for the company. (A duly authorized representative may thus be either a named individual or any individual occupying a named position) and,

c. The written authorization shall include the name, title and signature of the authorized representative and be attached to the SWPPP.

3. All inspection reports shall be signed by the *qualified inspector* that performs the inspection.

4. The MS4 SWPPP Acceptance form shall be signed by the principal executive officer or ranking elected official from the *regulated, traditional land use control MS4,* or by a duly authorized representative of that person.

   It shall constitute a permit violation if an incorrect and/or improper signatory authorizes any required forms, SWPPP and/or inspection reports.

I. Property Rights

The issuance of this permit does not convey any property rights of any sort, nor any exclusive privileges, nor does it authorize any injury to private property nor any invasion of personal rights, nor any infringement of Federal, State or local laws or regulations. *Owners or operators* must obtain any applicable conveyances, easements, licenses and/or access to real property prior to *commencing construction activity*.

J. Severability

The provisions of this permit are severable, and if any provision of this permit, or the application of any provision of this permit to any circumstance, is held invalid, the application of such provision to other circumstances, and the remainder of this permit shall not be affected thereby.

K. Requirement to Obtain Coverage Under an Alternative Permit

1. The Department may require any owner or operator authorized by this permit to apply for and/or obtain either an individual SPDES permit or another SPDES general permit. When the Department requires any discharger authorized by a general permit to apply for an individual SPDES permit, it shall notify the discharger in writing that a permit application is required. This notice shall

include a brief statement of the reasons for this decision, an application form, a statement setting a time frame for the owner or operator to file the application for an individual SPDES permit, and a deadline, not sooner than 180 days from owner or operator receipt of the notification letter, whereby the authorization to discharge under this general permit shall be terminated. Applications must be submitted to the appropriate Permit Administrator at the Regional Office. The Department may grant additional time upon demonstration, to the satisfaction of the Department, that additional time to apply for an alternative authorization is necessary or where the Department has not provided a permit determination in accordance with Part 621 of this Title.

2. When an individual SPDES permit is issued to a discharger authorized to *discharge* under a general SPDES permit for the same *discharge*(s), the general permit authorization for outfalls authorized under the individual SPDES permit is automatically terminated on the effective date of the individual permit unless termination is earlier in accordance with 6 NYCRR Part 750.

L. Proper Operation and Maintenance

The *owner or operator* shall at all times properly operate and maintain all facilities and systems of treatment and control (and related appurtenances) which are installed or used by the *owner or operator* to achieve compliance with the conditions of this permit and with the requirements of the SWPPP.

M. Inspection and Entry

The *owner or operator* shall allow an authorized representative of the Department, EPA, applicable county health department, or, in the case of a *construction site* which *discharges* through an *MS4*, an authorized representative of the *MS4* receiving the discharge, upon the presentation of credentials and other documents as may be required by law, to:

1. Enter upon the owner’s or operator's premises where a regulated facility or activity is located or conducted or where records must be kept under the conditions of this permit;

2. Have access to and copy at reasonable times, any records that must be kept under the conditions of this permit; and

3. Inspect at reasonable times any facilities or equipment (including monitoring and control equipment), practices or operations regulated or required by this permit.

4. Sample or monitor at reasonable times, for purposes of assuring permit compliance or as otherwise authorized by the Act or ECL, any substances or parameters at any location.

N. Permit Actions

This permit may, at any time, be modified, suspended, revoked, or renewed by the Department in accordance with 6 NYCRR Part 621. The filing of a request by the *owner or operator* for a permit modification, revocation and reissuance, termination, a notification of planned changes or anticipated noncompliance does not limit, diminish and/or stay compliance with any terms of this permit.

O. Definitions

Definitions of key terms are included in Appendix A of this permit.

P. Re-Opener Clause

1. If there is evidence indicating potential or realized impacts on water quality due to any stormwater discharge associated with construction activity covered by this permit, the owner or operator of such discharge may be required to obtain an individual permit or alternative general permit in accordance with Part VII.K. of this permit or the permit may be modified to include different limitations and/or requirements.

2. Any Department initiated permit modification, suspension or revocation will be conducted in accordance with 6 NYCRR Part 621, 6 NYCRR 750-1.18, and 6 NYCRR 750-1.20.

Q. Penalties for Falsification of Forms and Reports

In accordance with 6NYCRR Part 750-2.4 and 750-2.5, any person who knowingly makes any false material statement, representation, or certification in any application, record, report or other document filed or required to be maintained under this permit, including reports of compliance or noncompliance shall, upon conviction, be punished in accordance with ECL §71-1933 and or Articles 175 and 210 of the New York State Penal Law.

R. Other Permits

Nothing in this permit relieves the *owner or operator* from a requirement to obtain any other permits required by law.

APPENDIX A – Acronyms and Definitions

Acronyms

APO – Agency Preservation Officer
BMP – Best Management Practice
CPESC – Certified Professional in Erosion and Sediment Control
Cpv – Channel Protection Volume
CWA – Clean Water Act (or the Federal Water Pollution Control Act, 33 U.S.C. §1251 et seq)
DOW – Division of Water
EAF – Environmental Assessment Form
ECL - Environmental Conservation Law
EPA – U. S. Environmental Protection Agency
HSG – Hydrologic Soil Group
MS4 – Municipal Separate Storm Sewer System
NOI – Notice of Intent
NOT – Notice of Termination
NPDES – National Pollutant Discharge Elimination System
OPRHP – Office of Parks, Recreation and Historic Places
Qf – Extreme Flood
Qp – Overbank Flood
RRv – Runoff Reduction Volume
RWE – Regional Water Engineer
SEQR – State Environmental Quality Review
SEQRA - State Environmental Quality Review Act
SHPA – State Historic Preservation Act
SPDES – State Pollutant Discharge Elimination System
SWPPP – Stormwater Pollution Prevention Plan
TMDL – Total Maximum Daily Load
UPA – Uniform Procedures Act
USDA – United States Department of Agriculture
WQv – Water Quality Volume

Definitions

All definitions in this section are solely for the purposes of this permit.

Agricultural Building – a structure designed and constructed to house farm implements, hay, grain, poultry, livestock or other horticultural products; excluding any structure designed, constructed or used, in whole or in part, for human habitation, as a place of employment where agricultural products are processed, treated or packaged, or as a place used by the public.

Agricultural Property –means the land for construction of a barn, *agricultural building*, silo, stockyard, pen or other structural practices identified in Table II in the "Agricultural Management Practices Catalog for Nonpoint Source Pollution in New York State" prepared by the Department in cooperation with agencies of New York Nonpoint Source Coordinating Committee (dated June 2007).

Alter Hydrology from Pre to Post-Development Conditions - means the post-development peak flow rate(s) has increased by more than 5% of the pre-developed condition for the design storm of interest (e.g. 10 yr and 100 yr).

Combined Sewer - means a sewer that is designed to collect and convey both "sewage" and "stormwater".

Commence (Commencement of) Construction Activities - means the initial disturbance of soils associated with clearing, grading or excavation activities; or other construction related activities that disturb or expose soils such as demolition, stockpiling of fill material, and the initial installation of erosion and sediment control practices required in the SWPPP. See definition for "*Construction Activity(ies)*" also.

Construction Activity(ies) - means any clearing, grading, excavation, filling, demolition or stockpiling activities that result in soil disturbance. Clearing activities can include, but are not limited to, logging equipment operation, the cutting and skidding of trees, stump removal and/or brush root removal. Construction activity does not include routine maintenance that is performed to maintain the original line and grade, hydraulic capacity, or original purpose of a facility.

Construction Site – means the land area where *construction activity(ies)* will occur. See definition for "*Commence (Commencement of) Construction Activities"* and "*Larger Common Plan of Development or Sale" also.*

Dewatering – means the act of draining rainwater and/or groundwater from building foundations, vaults or excavations/trenches.

Direct Discharge (to a specific surface waterbody) - means that runoff flows from a *construction site* by overland flow and the first point of discharge is the specific surface waterbody, or runoff flows from a *construction site* to a separate storm sewer system

and the first point of discharge from the separate storm sewer system is the specific surface waterbody.

Discharge(s) - means any addition of any pollutant to waters of the State through an outlet or *point source*.

Embankment –means an earthen or rock slope that supports a road/highway.

Endangered or Threatened Species – see 6 NYCRR Part 182 of the Department's rules and regulations for definition of terms and requirements.

Environmental Conservation Law (ECL) - means chapter 43-B of the Consolidated Laws of the State of New York, entitled the Environmental Conservation Law.

Equivalent (Equivalence) – means that the practice or measure meets all the performance, longevity, maintenance, and safety objectives of the technical standard and will provide an equal or greater degree of water quality protection.

Final Stabilization - means that all soil disturbance activities have ceased and a uniform, perennial vegetative cover with a density of eighty (80) percent over the entire pervious surface has been established; or other equivalent stabilization measures, such as permanent landscape mulches, rock rip-rap or washed/crushed stone have been applied on all disturbed areas that are not covered by permanent structures, concrete or pavement.

General SPDES permit - means a SPDES permit issued pursuant to 6 NYCRR Part 750-1.21 and Section 70-0117 of the ECL authorizing a category of discharges.

Groundwater(s) - means waters in the saturated zone. The saturated zone is a subsurface zone in which all the interstices are filled with water under pressure greater than that of the atmosphere. Although the zone may contain gas-filled interstices or interstices filled with fluids other than water, it is still considered saturated.

Historic Property – means any building, structure, site, object or district that is listed on the State or National Registers of Historic Places or is determined to be eligible for listing on the State or National Registers of Historic Places.

Impervious Area (Cover) - means all impermeable surfaces that cannot effectively infiltrate rainfall. This includes paved, concrete and gravel surfaces (i.e. parking lots, driveways, roads, runways and sidewalks); building rooftops and miscellaneous impermeable structures such as patios, pools, and sheds.

Infeasible – means not technologically possible, or not economically practicable and achievable in light of best industry practices.

Larger Common Plan of Development or Sale - means a contiguous area where multiple separate and distinct *construction activities* are occurring, or will occur, under one plan. The term "plan" in "larger common plan of development or sale" is broadly defined as any announcement or piece of documentation (including a sign, public notice or hearing, marketing plan, advertisement, drawing, permit application, State Environmental Quality Review Act (SEQRA) environmental assessment form or other documents, zoning request, computer design, etc.) or physical demarcation (including boundary signs, lot stakes, surveyor markings, etc.) indicating that *construction activities* may occur on a specific plot.

For discrete construction projects that are located within a larger common plan of development or sale that are at least 1/4 mile apart, each project can be treated as a separate plan of development or sale provided any interconnecting road, pipeline or utility project that is part of the same "common plan" is not concurrently being disturbed.

Minimize – means reduce and/or eliminate to the extent achievable using control measures (including best management practices) that are technologically available and economically practicable and achievable in light of best industry practices.

Municipal Separate Storm Sewer (MS4) - a conveyance or system of conveyances (including roads with drainage systems, municipal streets, catch basins, curbs, gutters, ditches, man-made channels, or storm drains):

(i) Owned or operated by a State, city, town, borough, county, parish, district, association, or other public body (created by or pursuant to State law) having jurisdiction over disposal of sewage, industrial wastes, stormwater, or other wastes, including special districts under State law such as a sewer district, flood control district or drainage district, or similar entity, or an Indian tribe or an authorized Indian tribal organization, or a designated and approved management agency under section 208 of the CWA that discharges to surface waters of the State*;*
(ii) Designed or used for collecting or conveying stormwater;
(iii) Which is not a *combined sewer*; and
(iv) Which is not part of a Publicly Owned Treatment Works (POTW) as defined at 40 CFR 122.2.

National Pollutant Discharge Elimination System (NPDES) - means the national system for the issuance of wastewater and stormwater permits under the Federal Water Pollution Control Act (Clean Water Act).

Natural Buffer –means an undisturbed area with natural cover running along a surface water (e.g. wetland, stream, river, lake, etc.).

New Development – means any land disturbance that does not meet the definition of Redevelopment Activity included in this appendix.

New York State Erosion and Sediment Control Certificate Program – a certificate program that establishes and maintains a process to identify and recognize individuals who are capable of developing, designing, inspecting and maintaining erosion and sediment control plans on projects that disturb soils in New York State. The certificate program is administered by the New York State Conservation District Employees Association.

NOI Acknowledgment Letter - means the letter that the Department sends to an owner or operator to acknowledge the Department's receipt and acceptance of a complete Notice of Intent. This letter documents the owner's or operator's authorization to discharge in accordance with the general permit for stormwater discharges from *construction activity*.

Nonpoint Source - means any source of water pollution or pollutants which is not a discrete conveyance or *point source* permitted pursuant to Title 7 or 8 of Article 17 of the Environmental Conservation Law (see ECL Section 17-1403).

Overbank –means flow events that exceed the capacity of the stream channel and spill out into the adjacent floodplain.

Owner or Operator - means the person, persons or legal entity which owns or leases the property on which the *construction activity* is occurring; an entity that has operational control over the construction plans and specifications, including the ability to make modifications to the plans and specifications; and/or an entity that has day-to-day operational control of those activities at a project that are necessary to ensure compliance with the permit conditions.

Performance Criteria – means the design criteria listed under the "Required Elements" sections in Chapters 5, 6 and 10 of the technical standard, New York State Stormwater Management Design Manual, dated January 2015. It does not include the Sizing Criteria (i.e. WQv, RRv, Cpv, Qp and Qf) in Part I.C.2. of the permit.

Point Source - means any discernible, confined and discrete conveyance, including but not limited to any pipe, ditch, channel, tunnel, conduit, well, discrete fissure, container, rolling stock, concentrated animal feeding operation, vessel or other floating craft, or landfill leachate collection system from which *pollutants* are or may be discharged.

Pollutant - means dredged spoil, filter backwash, solid waste, incinerator residue, sewage, garbage, sewage sludge, munitions, chemical wastes, biological materials, radioactive materials, heat, wrecked or discarded equipment, rock, sand and industrial, municipal, agricultural waste and ballast discharged into water; which may cause or might reasonably be expected to cause pollution of the waters of the state in contravention of the standards or guidance values adopted as provided in 6 NYCRR Parts 700 et seq .

Qualified Inspector - means a person that is knowledgeable in the principles and practices of erosion and sediment control, such as a licensed Professional Engineer, Certified Professional in Erosion and Sediment Control (CPESC), Registered Landscape Architect, New York State Erosion and Sediment Control Certificate Program holder or other Department endorsed individual(s).

It can also mean someone working under the direct supervision of, and at the same company as, the licensed Professional Engineer or Registered Landscape Architect, provided that person has training in the principles and practices of erosion and sediment control. Training in the principles and practices of erosion and sediment control means that the individual working under the direct supervision of the licensed Professional Engineer or Registered Landscape Architect has received four (4) hours of Department endorsed training in proper erosion and sediment control principles from a Soil and Water Conservation District, or other Department endorsed entity. After receiving the initial training, the individual working under the direct supervision of the licensed Professional Engineer or Registered Landscape Architect shall receive four (4) hours of training every three (3) years.

It can also mean a person that meets the *Qualified Professional* qualifications in addition to the *Qualified Inspector* qualifications.

Note: Inspections of any post-construction stormwater management practices that include structural components, such as a dam for an impoundment, shall be performed by a licensed Professional Engineer.

Qualified Professional - means a person that is knowledgeable in the principles and practices of stormwater management and treatment, such as a licensed Professional Engineer, Registered Landscape Architect or other Department endorsed individual(s). Individuals preparing SWPPPs that require the post-construction stormwater management practice component must have an understanding of the principles of hydrology, water quality management practice design, water quantity control design, and, in many cases, the principles of hydraulics. All components of the SWPPP that involve the practice of engineering, as defined by the NYS Education Law (see Article 145), shall be prepared by, or under the direct supervision of, a professional engineer licensed to practice in the State of New York.

Redevelopment Activity(ies) – means the disturbance and reconstruction of existing impervious area, including impervious areas that were removed from a project site within five (5) years of preliminary project plan submission to the local government (i.e. site plan, subdivision, etc.).

Regulated, Traditional Land Use Control MS4 - means a city, town or village with land use control authority that is authorized to discharge under New York State DEC's

SPDES General Permit For Stormwater Discharges from Municipal Separate Stormwater Sewer Systems (MS4s) or the City of New York's Individual SPDES Permit for their Municipal Separate Storm Sewer Systems (NY-0287890).

Routine Maintenance Activity - means *construction activity* that is performed to maintain the original line and grade, hydraulic capacity, or original purpose of a facility, including, but not limited to:

- Re-grading of gravel roads or parking lots,
- Cleaning and shaping of existing roadside ditches and culverts that maintains the approximate original line and grade, and hydraulic capacity of the ditch,
- Cleaning and shaping of existing roadside ditches that does not maintain the approximate original grade, hydraulic capacity and purpose of the ditch if the changes to the line and grade, hydraulic capacity or purpose of the ditch are installed to improve water quality and quantity controls (e.g. installing grass lined ditch),
- Placement of aggregate shoulder backing that stabilizes the transition between the road shoulder and the ditch or *embankment*,
- Full depth milling and filling of existing asphalt pavements, replacement of concrete pavement slabs, and similar work that does not expose soil or disturb the bottom six (6) inches of subbase material,
- Long-term use of equipment storage areas at or near highway maintenance facilities,
- Removal of sediment from the edge of the highway to restore a previously existing sheet-flow drainage connection from the highway surface to the highway ditch or *embankment*,
- Existing use of Canal Corp owned upland disposal sites for the canal, and
- Replacement of curbs, gutters, sidewalks and guide rail posts.

Site limitations – means site conditions that prevent the use of an infiltration technique and or infiltration of the total WQv. Typical site limitations include: seasonal high groundwater, shallow depth to bedrock, and soils with an infiltration rate less than 0.5 inches/hour. The existence of site limitations shall be confirmed and documented using actual field testing (i.e. test pits, soil borings, and infiltration test) or using information from the most current United States Department of Agriculture (USDA) Soil Survey for the County where the project is located.

Sizing Criteria – means the criteria included in Part I.C.2 of the permit that are used to size post-construction stormwater management control practices. The criteria include; Water Quality Volume (WQv), Runoff Reduction Volume (RRv), Channel Protection Volume (Cpv), *Overbank* Flood (Qp), and Extreme Flood (Qf).

State Pollutant Discharge Elimination System (SPDES) - means the system established pursuant to Article 17 of the ECL and 6 NYCRR Part 750 for issuance of permits authorizing discharges to the waters of the state.

Steep Slope – means land area designated on the current United States Department of Agriculture ("USDA") Soil Survey as Soil Slope Phase "D", (provided the map unit name is inclusive of slopes greater than 25%) , or Soil Slope Phase E or F, (regardless of the map unit name), or a combination of the three designations.

Streambank – as used in this permit, means the terrain alongside the bed of a creek or stream. The bank consists of the sides of the channel, between which the flow is confined.

Stormwater Pollution Prevention Plan (SWPPP) – means a project specific report, including construction drawings, that among other things: describes the construction activity(ies), identifies the potential sources of pollution at the *construction site*; describes and shows the stormwater controls that will be used to control the pollutants (i.e. erosion and sediment controls; for many projects, includes post-construction stormwater management controls); and identifies procedures the *owner or operator* will implement to comply with the terms and conditions of the permit. See Part III of the permit for a complete description of the information that must be included in the SWPPP.

Surface Waters of the State - shall be construed to include lakes, bays, sounds, ponds, impounding reservoirs, springs, rivers, streams, creeks, estuaries, marshes, inlets, canals, the Atlantic ocean within the territorial seas of the state of New York and all other bodies of surface water, natural or artificial, inland or coastal, fresh or salt, public or private (except those private waters that do not combine or effect a junction with natural surface waters), which are wholly or partially within or bordering the state or within its jurisdiction. Waters of the state are further defined in 6 NYCRR Parts 800 to 941.

Temporarily Ceased – means that an existing disturbed area will not be disturbed again within 14 calendar days of the previous soil disturbance.

Temporary Stabilization - means that exposed soil has been covered with material(s) as set forth in the technical standard, New York Standards and Specifications for Erosion and Sediment Control, to prevent the exposed soil from eroding. The materials can include, but are not limited to, mulch, seed and mulch, and erosion control mats (e.g. jute twisted yarn, excelsior wood fiber mats).

Total Maximum Daily Loads (TMDLs) - A TMDL is the sum of the allowable loads of a single pollutant from all contributing point and *nonpoint source*s. It is a calculation of the maximum amount of a pollutant that a waterbody can receive on a daily basis and still meet *water quality standards*, and an allocation of that amount to the pollutant's sources. A TMDL stipulates wasteload allocations (WLAs) for *point source* discharges, load allocations (LAs) for *nonpoint source*s, and a margin of safety (MOS).

Trained Contractor - means an employee from the contracting (construction) company, identified in Part III.A.6., that has received four (4) hours of Department endorsed

training in proper erosion and sediment control principles from a Soil and Water Conservation District, or other Department endorsed entity. After receiving the initial training, the *trained contractor* shall receive four (4) hours of training every three (3) years.

It can also mean an employee from the contracting (construction) company, identified in Part III.A.6., that meets the *qualified inspector* qualifications (e.g. licensed Professional Engineer, Certified Professional in Erosion and Sediment Control (CPESC), Registered Landscape Architect, New York State Erosion and Sediment Control Certificate Program holder, or someone working under the direct supervision of, and at the same company as, the licensed Professional Engineer or Registered Landscape Architect, provided they have received four (4) hours of Department endorsed training in proper erosion and sediment control principles from a Soil and Water Conservation District, or other Department endorsed entity).

The *trained contractor* is responsible for the day to day implementation of the SWPPP.

Uniform Procedures Act (UPA) Permit - means a permit required under 6 NYCRR Part 621 of the Environmental Conservation Law (ECL), Article 70.

Water Quality Standard - means such measures of purity or quality for any waters in relation to their reasonable and necessary use as promulgated in 6 NYCRR Part 700 et seq.

APPENDIX B – Required SWPPP Components by Project Type

Table 1
Construction Activities that Require the Preparation of a SWPPP That Only Includes Erosion and Sediment Controls

The following construction activities that involve soil disturbances of one (1) or more acres of land, but less than five (5) acres:

- Single family home not located in one of the watersheds listed in Appendix C or not *directly discharging* to one of the 303(d) segments listed in Appendix E
- Single family residential subdivisions with 25% or less impervious cover at total site build-out and not located in one of the watersheds listed in Appendix C and not directly discharging to one of the 303(d) segments listed in Appendix E
- Construction of a barn or other *agricultural building*, silo, stock yard or pen.

The following construction activities that involve soil disturbances between five thousand (5000) square feet and one (1) acre of land:

All construction activities located in the watersheds identified in Appendix D that involve soil disturbances between five thousand (5,000) square feet and one (1) acre of land.

The following construction activities that involve soil disturbances of one (1) or more acres of land:

- Installation of underground, linear utilities; such as gas lines, fiber-optic cable, cable TV, electric, telephone, sewer mains, and water mains
- Environmental enhancement projects, such as wetland mitigation projects, stormwater retrofits and stream restoration projects
- Pond construction
- Linear bike paths running through areas with vegetative cover, including bike paths surfaced with an impervious cover
- Cross-country ski trails and walking/hiking trails
- Sidewalk, bike path or walking path projects, surfaced with an impervious cover, that are not part of residential, commercial or institutional development;
- Sidewalk, bike path or walking path projects, surfaced with an impervious cover, that include incidental shoulder or curb work along an existing highway to support construction of the sidewalk, bike path or walking path.
- Slope stabilization projects
- Slope flattening that changes the grade of the site, but does not significantly change the runoff characteristics

Table 1 (Continued) CONSTRUCTION ACTIVITIES THAT REQUIRE THE PREPARATION OF A SWPPP THAT ONLY INCLUDES EROSION AND SEDIMENT CONTROLS

The following construction activities that involve soil disturbances of one (1) or more acres of land:

- Spoil areas that will be covered with vegetation
- Vegetated open space projects (i.e. recreational parks, lawns, meadows, fields, downhill ski trails) excluding projects that *alter hydrology from pre to post development* conditions,
- Athletic fields (natural grass) that do not include the construction or reconstruction of *impervious area* and do not *alter hydrology from pre to post development* conditions
- Demolition project where vegetation will be established, and no redevelopment is planned
- Overhead electric transmission line project that does not include the construction of permanent access roads or parking areas surfaced with *impervious cover*
- Structural practices as identified in Table II in the "Agricultural Management Practices Catalog for Nonpoint Source Pollution in New York State", excluding projects that involve soil disturbances of greater than five acres and construction activities that include the construction or reconstruction of impervious area
- Temporary access roads, median crossovers, detour roads, lanes, or other temporary impervious areas that will be restored to pre-construction conditions once the construction activity is complete

Table 2
CONSTRUCTION ACTIVITIES THAT REQUIRE THE PREPARATION OF A SWPPP THAT INCLUDES POST-CONSTRUCTION STORMWATER MANAGEMENT PRACTICES

The following construction activities that involve soil disturbances of one (1) or more acres of land:

- Single family home located in one of the watersheds listed in Appendix C or *directly discharging* to one of the 303(d) segments listed in Appendix E
- Single family home that disturbs five (5) or more acres of land
- Single family residential subdivisions located in one of the watersheds listed in Appendix C or *directly discharging* to one of the 303(d) segments listed in Appendix E
- Single family residential subdivisions that involve soil disturbances of between one (1) and five (5) acres of land with greater than 25% impervious cover at total site build-out
- Single family residential subdivisions that involve soil disturbances of five (5) or more acres of land, and single family residential subdivisions that involve soil disturbances of less than five (5) acres that are part of a larger common plan of development or sale that will ultimately disturb five or more acres of land
- Multi-family residential developments; includes duplexes, townhomes, condominiums, senior housing complexes, apartment complexes, and mobile home parks
- Airports
- Amusement parks
- Breweries, cideries, and wineries, including establishments constructed on agricultural land
- Campgrounds
- Cemeteries that include the construction or reconstruction of impervious area (>5% of disturbed area) or *alter the hydrology from pre to post development* conditions
- Commercial developments
- Churches and other places of worship
- Construction of a barn or other *agricultural building* (e.g. silo) and structural practices as identified in Table II in the "Agricultural Management Practices Catalog for Nonpoint Source Pollution in New York State" that include the construction or reconstruction of *impervious area*, excluding projects that involve soil disturbances of less than five acres.
- Golf courses
- Institutional development; includes hospitals, prisons, schools and colleges
- Industrial facilities; includes industrial parks
- Landfills
- Municipal facilities; includes highway garages, transfer stations, office buildings, POTW's, water treatment plants, and water storage tanks
- Office complexes
- Playgrounds that include the construction or reconstruction of impervious area
- Sports complexes
- Racetracks; includes racetracks with earthen (dirt) surface
- Road construction or reconstruction, including roads constructed as part of the construction activities listed in Table 1

Table 2 (Continued)

CONSTRUCTION ACTIVITIES THAT REQUIRE THE PREPARATION OF A SWPPP THAT INCLUDES POST-CONSTRUCTION STORMWATER MANAGEMENT PRACTICES

The following construction activities that involve soil disturbances of one (1) or more acres of land:

- Parking lot construction or reconstruction, including parking lots constructed as part of the construction activities listed in Table 1
- Athletic fields (natural grass) that include the construction or reconstruction of impervious area (>5% of disturbed area) or *alter the hydrology from pre to post development* conditions
- Athletic fields with artificial turf
- Permanent access roads, parking areas, substations, compressor stations and well drilling pads, surfaced with *impervious cover,* and constructed as part of an over-head electric transmission line project, wind-power project, cell tower project, oil or gas well drilling project, sewer or water main project or other linear utility project
- Sidewalk, bike path or walking path projects, surfaced with an impervious cover, that are part of a residential, commercial or institutional development
- Sidewalk, bike path or walking path projects, surfaced with an impervious cover, that are part of a highway construction or reconstruction project
- All other construction activities that include the construction or reconstruction of *impervious area* or *alter the hydrology from pre to post development* conditions, and are not listed in Table 1

APPENDIX C – Watersheds Requiring Enhanced Phosphorus Removal

Watersheds where *owners or operators* of construction activities identified in Table 2 of Appendix B must prepare a SWPPP that includes post-construction stormwater management practices designed in conformance with the Enhanced Phosphorus Removal Standards included in the technical standard, New York State Stormwater Management Design Manual ("Design Manual").

- Entire New York City Watershed located east of the Hudson River - Figure 1
- Onondaga Lake Watershed - Figure 2
- Greenwood Lake Watershed -Figure 3
- Oscawana Lake Watershed – Figure 4
- Kinderhook Lake Watershed – Figure 5

Figure 1 - New York City Watershed East of the Hudson

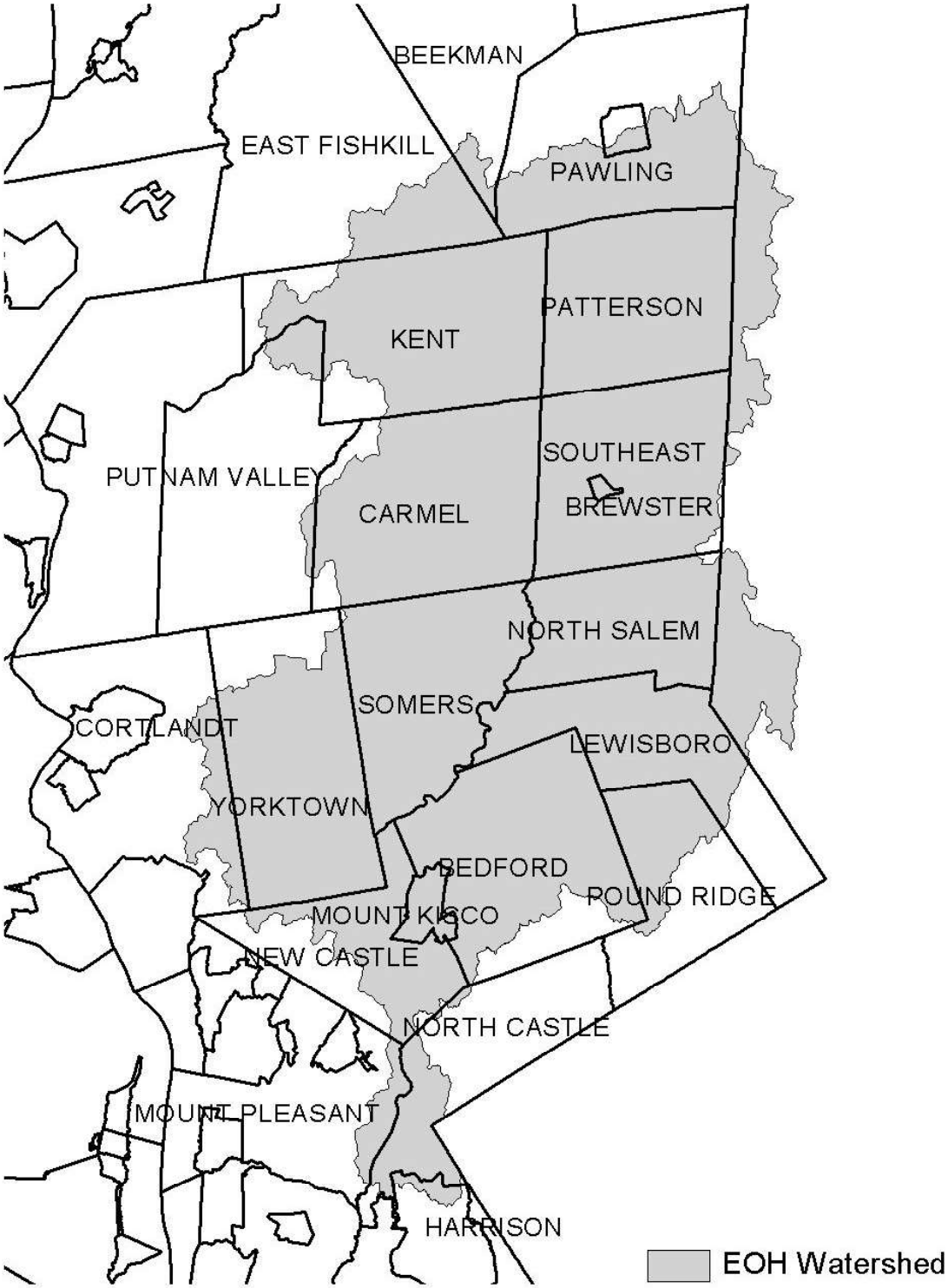

Figure 2 - Onondaga Lake Watershed



Figure 3 - Greenwood Lake Watershed

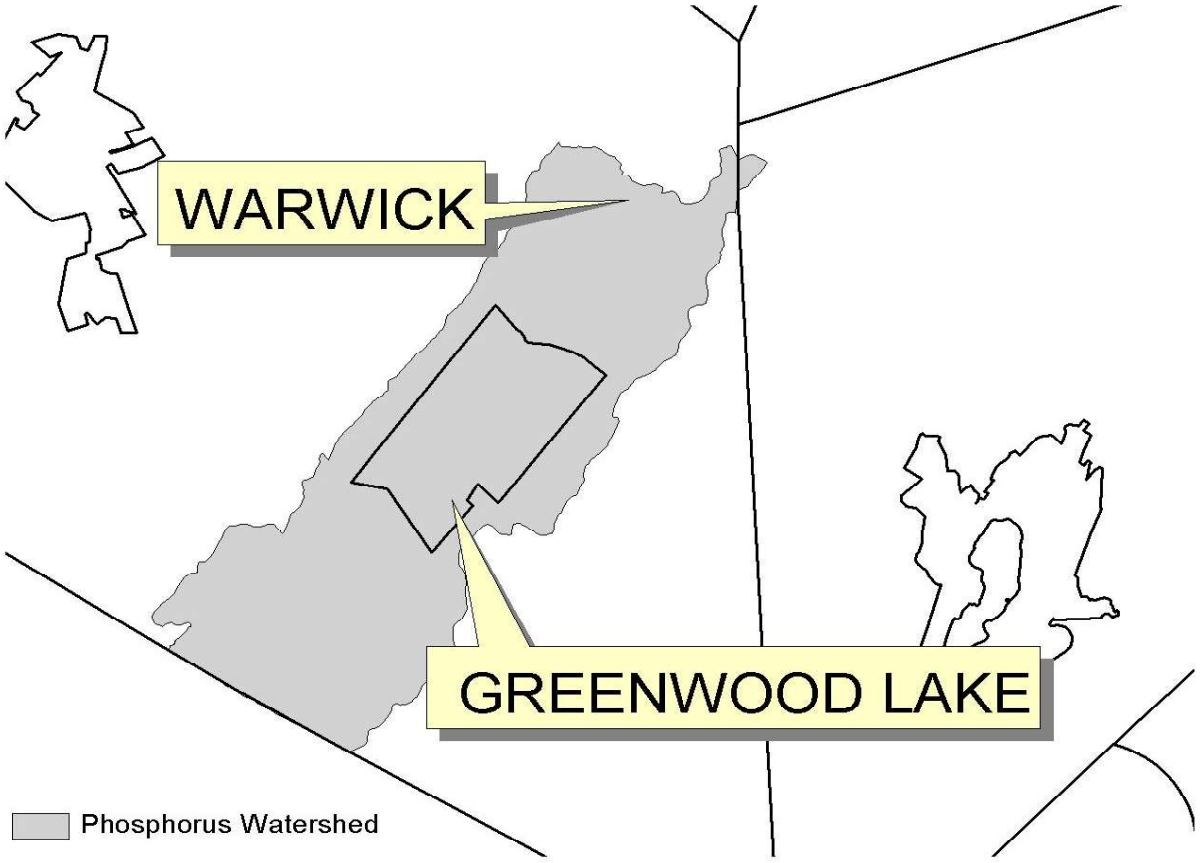

Figure 4 - Oscawana Lake Watershed

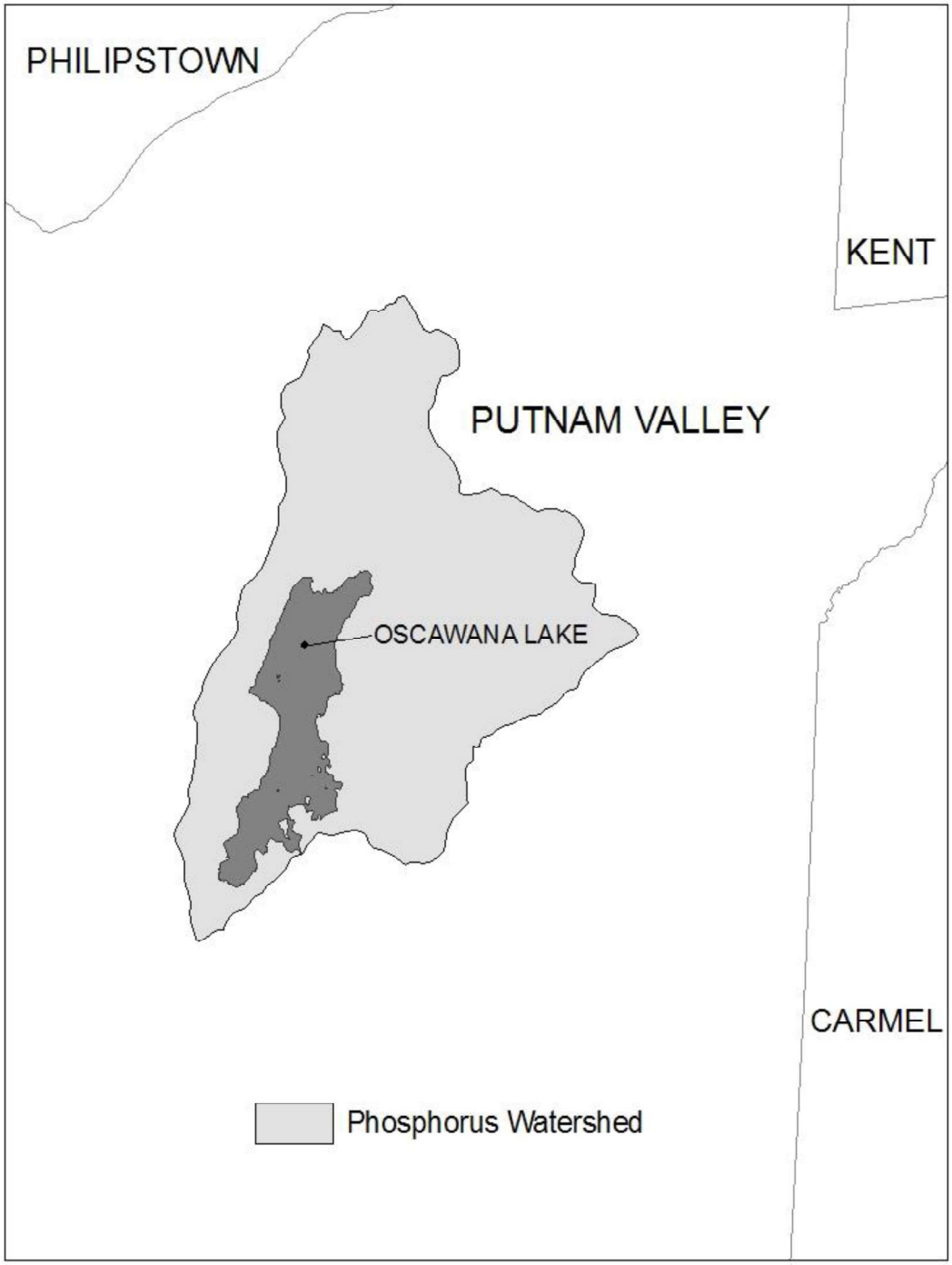

Figure 5 - Kinderhook Lake Watershed

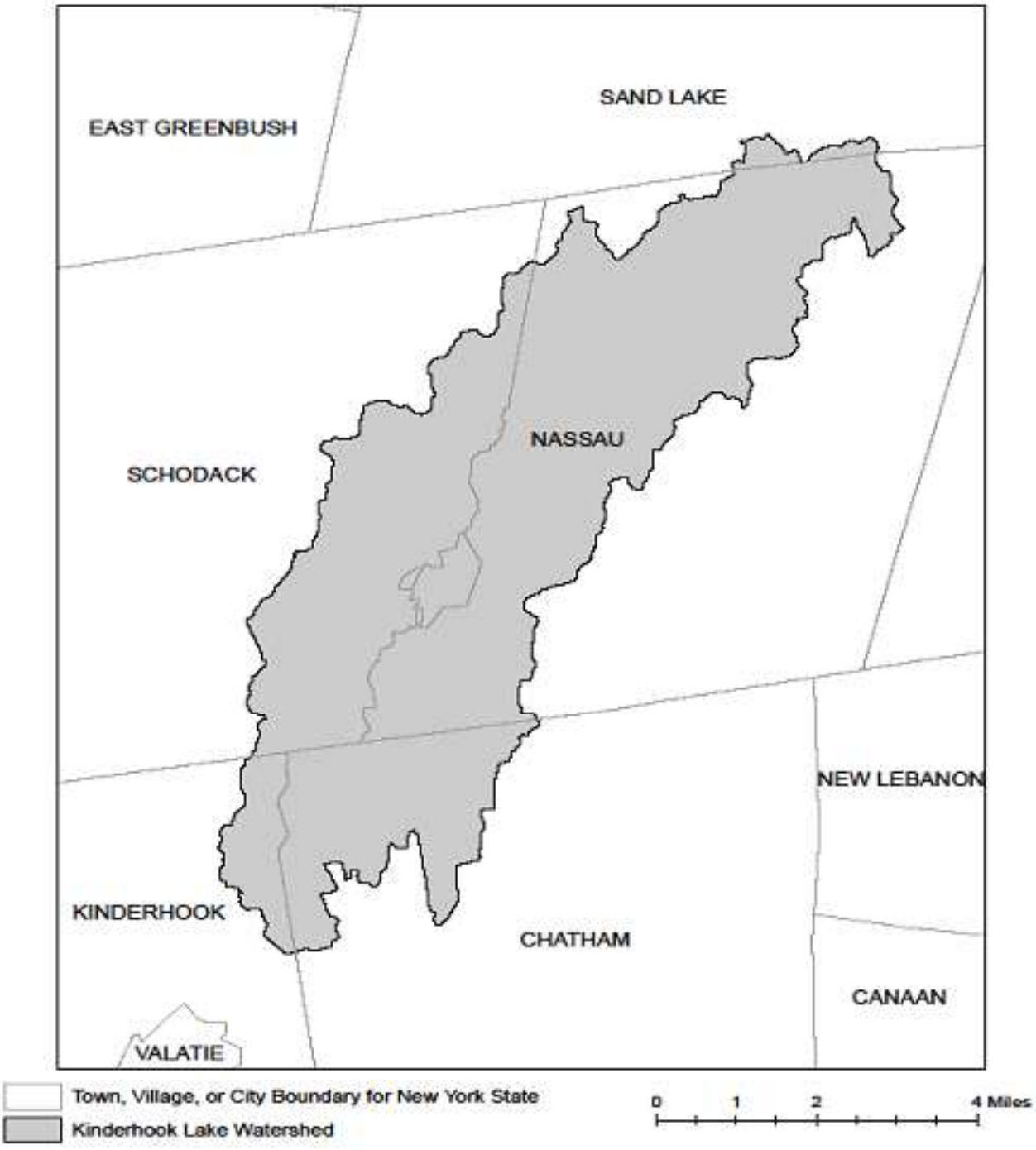

APPENDIX D – Watersheds with Lower Disturbance Threshold

Watersheds where *owners or operators* of construction activities that involve soil disturbances between five thousand (5000) square feet and one (1) acre of land must obtain coverage under this permit.

Entire New York City Watershed that is located east of the Hudson River - See Figure 1 in Appendix C

APPENDIX E – 303(d) Segments Impaired by Construction Related Pollutant(s)

List of 303(d) segments impaired by pollutants related to *construction activity* (e.g. silt, sediment or nutrients). The list was developed using "The Final New York State 2016 Section 303(d) List of Impaired Waters Requiring a TMDL/Other Strategy" dated November 2016. *Owners or operators* of single family home and single family residential subdivisions with 25% or less total impervious cover at total site build-out that involve soil disturbances of one or more acres of land, but less than 5 acres, and *directly discharge* to one of the listed segments below shall prepare a SWPPP that includes post-construction stormwater management practices designed in conformance with the New York State Stormwater Management Design Manual ("Design Manual"), dated January 2015.

COUNTY	WATERBODY	POLLUTANT
Albany	Ann Lee (Shakers) Pond, Stump Pond	Nutrients
Albany	Basic Creek Reservoir	Nutrients
Allegany	Amity Lake, Saunders Pond	Nutrients
Bronx	Long Island Sound, Bronx	Nutrients
Bronx	Van Cortlandt Lake	Nutrients
Broome	Fly Pond, Deer Lake, Sky Lake	Nutrients
Broome	Minor Tribs to Lower Susquehanna (north)	Nutrients
Broome	Whitney Point Lake/Reservoir	Nutrients
Cattaraugus	Allegheny River/Reservoir	Nutrients
Cattaraugus	Beaver (Alma) Lake	Nutrients
Cattaraugus	Case Lake	Nutrients
Cattaraugus	Linlyco/Club Pond	Nutrients
Cayuga	Duck Lake	Nutrients
Cayuga	Little Sodus Bay	Nutrients
Chautauqua	Bear Lake	Nutrients
Chautauqua	Chadakoin River and tribs	Nutrients
Chautauqua	Chautauqua Lake, North	Nutrients
Chautauqua	Chautauqua Lake, South	Nutrients
Chautauqua	Findley Lake	Nutrients
Chautauqua	Hulburt/Clymer Pond	Nutrients
Clinton	Great Chazy River, Lower, Main Stem	Silt/Sediment
Clinton	Lake Champlain, Main Lake, Middle	Nutrients
Clinton	Lake Champlain, Main Lake, North	Nutrients
Columbia	Kinderhook Lake	Nutrients
Columbia	Robinson Pond	Nutrients
Cortland	Dean Pond	Nutrients

303(d) Segments Impaired by Construction Related Pollutant(s)

Dutchess	Fall Kill and tribs	Nutrients
Dutchess	Hillside Lake	Nutrients
Dutchess	Wappingers Lake	Nutrients
Dutchess	Wappingers Lake	Silt/Sediment
Erie	Beeman Creek and tribs	Nutrients
Erie	Ellicott Creek, Lower, and tribs	Silt/Sediment
Erie	Ellicott Creek, Lower, and tribs	Nutrients
Erie	Green Lake	Nutrients
Erie	Little Sister Creek, Lower, and tribs	Nutrients
Erie	Murder Creek, Lower, and tribs	Nutrients
Erie	Rush Creek and tribs	Nutrients
Erie	Scajaquada Creek, Lower, and tribs	Nutrients
Erie	Scajaquada Creek, Middle, and tribs	Nutrients
Erie	Scajaquada Creek, Upper, and tribs	Nutrients
Erie	South Branch Smoke Cr, Lower, and tribs	Silt/Sediment
Erie	South Branch Smoke Cr, Lower, and tribs	Nutrients
Essex	Lake Champlain, Main Lake, South	Nutrients
Essex	Lake Champlain, South Lake	Nutrients
Essex	Willsboro Bay	Nutrients
Genesee	Bigelow Creek and tribs	Nutrients
Genesee	Black Creek, Middle, and minor tribs	Nutrients
Genesee	Black Creek, Upper, and minor tribs	Nutrients
Genesee	Bowen Brook and tribs	Nutrients
Genesee	LeRoy Reservoir	Nutrients
Genesee	Oak Orchard Cr, Upper, and tribs	Nutrients
Genesee	Tonawanda Creek, Middle, Main Stem	Nutrients
Greene	Schoharie Reservoir	Silt/Sediment
Greene	Sleepy Hollow Lake	Silt/Sediment
Herkimer	Steele Creek tribs	Silt/Sediment
Herkimer	Steele Creek tribs	Nutrients
Jefferson	Moon Lake	Nutrients
Kings	Hendrix Creek	Nutrients
Kings	Prospect Park Lake	Nutrients
Lewis	Mill Creek/South Branch, and tribs	Nutrients
Livingston	Christie Creek and tribs	Nutrients
Livingston	Conesus Lake	Nutrients
Livingston	Mill Creek and minor tribs	Silt/Sediment
Monroe	Black Creek, Lower, and minor tribs	Nutrients
Monroe	Buck Pond	Nutrients
Monroe	Cranberry Pond	Nutrients

303(d) Segments Impaired by Construction Related Pollutant(s)

Monroe	Lake Ontario Shoreline, Western	Nutrients
Monroe	Long Pond	Nutrients
Monroe	Mill Creek and tribs	Nutrients
Monroe	Mill Creek/Blue Pond Outlet and tribs	Nutrients
Monroe	Minor Tribs to Irondequoit Bay	Nutrients
Monroe	Rochester Embayment - East	Nutrients
Monroe	Rochester Embayment - West	Nutrients
Monroe	Shipbuilders Creek and tribs	Nutrients
Monroe	Thomas Creek/White Brook and tribs	Nutrients
Nassau	Beaver Lake	Nutrients
Nassau	Camaans Pond	Nutrients
Nassau	East Meadow Brook, Upper, and tribs	Silt/Sediment
Nassau	East Rockaway Channel	Nutrients
Nassau	Grant Park Pond	Nutrients
Nassau	Hempstead Bay	Nutrients
Nassau	Hempstead Lake	Nutrients
Nassau	Hewlett Bay	Nutrients
Nassau	Hog Island Channel	Nutrients
Nassau	Long Island Sound, Nassau County Waters	Nutrients
Nassau	Massapequa Creek and tribs	Nutrients
Nassau	Milburn/Parsonage Creeks, Upp, and tribs	Nutrients
Nassau	Reynolds Channel, west	Nutrients
Nassau	Tidal Tribs to Hempstead Bay	Nutrients
Nassau	Tribs (fresh) to East Bay	Nutrients
Nassau	Tribs (fresh) to East Bay	Silt/Sediment
Nassau	Tribs to Smith/Halls Ponds	Nutrients
Nassau	Woodmere Channel	Nutrients
New York	Harlem Meer	Nutrients
New York	The Lake in Central Park	Nutrients
Niagara	Bergholtz Creek and tribs	Nutrients
Niagara	Hyde Park Lake	Nutrients
Niagara	Lake Ontario Shoreline, Western	Nutrients
Niagara	Lake Ontario Shoreline, Western	Nutrients
Oneida	Ballou, Nail Creeks and tribs	Nutrients
Onondaga	Harbor Brook, Lower, and tribs	Nutrients
Onondaga	Ley Creek and tribs	Nutrients
Onondaga	Minor Tribs to Onondaga Lake	Nutrients
Onondaga	Ninemile Creek, Lower, and tribs	Nutrients
Onondaga	Onondaga Creek, Lower, and tribs	Nutrients
Onondaga	Onondaga Creek, Middle, and tribs	Nutrients

303(d) Segments Impaired by Construction Related Pollutant(s)

Onondaga	Onondaga Lake, northern end	Nutrients
Onondaga	Onondaga Lake, southern end	Nutrients
Ontario	Great Brook and minor tribs	Silt/Sediment
Ontario	Great Brook and minor tribs	Nutrients
Ontario	Hemlock Lake Outlet and minor tribs	Nutrients
Ontario	Honeoye Lake	Nutrients
Orange	Greenwood Lake	Nutrients
Orange	Monhagen Brook and tribs	Nutrients
Orange	Orange Lake	Nutrients
Orleans	Lake Ontario Shoreline, Western	Nutrients
Orleans	Lake Ontario Shoreline, Western	Nutrients
Oswego	Lake Neatahwanta	Nutrients
Oswego	Pleasant Lake	Nutrients
Putnam	Bog Brook Reservoir	Nutrients
Putnam	Boyd Corners Reservoir	Nutrients
Putnam	Croton Falls Reservoir	Nutrients
Putnam	Diverting Reservoir	Nutrients
Putnam	East Branch Reservoir	Nutrients
Putnam	Lake Carmel	Nutrients
Putnam	Middle Branch Reservoir	Nutrients
Putnam	Oscawana Lake	Nutrients
Putnam	Palmer Lake	Nutrients
Putnam	West Branch Reservoir	Nutrients
Queens	Bergen Basin	Nutrients
Queens	Flushing Creek/Bay	Nutrients
Queens	Jamaica Bay, Eastern, and tribs (Queens)	Nutrients
Queens	Kissena Lake	Nutrients
Queens	Meadow Lake	Nutrients
Queens	Willow Lake	Nutrients
Rensselaer	Nassau Lake	Nutrients
Rensselaer	Snyders Lake	Nutrients
Richmond	Grasmere Lake/Bradys Pond	Nutrients
Rockland	Congers Lake, Swartout Lake	Nutrients
Rockland	Rockland Lake	Nutrients
Saratoga	Ballston Lake	Nutrients
Saratoga	Dwaas Kill and tribs	Silt/Sediment
Saratoga	Dwaas Kill and tribs	Nutrients
Saratoga	Lake Lonely	Nutrients
Saratoga	Round Lake	Nutrients
Saratoga	Tribs to Lake Lonely	Nutrients

303(d) Segments Impaired by Construction Related Pollutant(s)

Schenectady	Collins Lake	Nutrients
Schenectady	Duane Lake	Nutrients
Schenectady	Mariaville Lake	Nutrients
Schoharie	Engleville Pond	Nutrients
Schoharie	Summit Lake	Nutrients
Seneca	Reeder Creek and tribs	Nutrients
St.Lawrence	Black Lake Outlet/Black Lake	Nutrients
St.Lawrence	Fish Creek and minor tribs	Nutrients
Steuben	Smith Pond	Nutrients
Suffolk	Agawam Lake	Nutrients
Suffolk	Big/Little Fresh Ponds	Nutrients
Suffolk	Canaan Lake	Silt/Sediment
Suffolk	Canaan Lake	Nutrients
Suffolk	Flanders Bay, West/Lower Sawmill Creek	Nutrients
Suffolk	Fresh Pond	Nutrients
Suffolk	Great South Bay, East	Nutrients
Suffolk	Great South Bay, Middle	Nutrients
Suffolk	Great South Bay, West	Nutrients
Suffolk	Lake Ronkonkoma	Nutrients
Suffolk	Long Island Sound, Suffolk County, West	Nutrients
Suffolk	Mattituck (Marratooka) Pond	Nutrients
Suffolk	Meetinghouse/Terrys Creeks and tribs	Nutrients
Suffolk	Mill and Seven Ponds	Nutrients
Suffolk	Millers Pond	Nutrients
Suffolk	Moriches Bay, East	Nutrients
Suffolk	Moriches Bay, West	Nutrients
Suffolk	Peconic River, Lower, and tidal tribs	Nutrients
Suffolk	Quantuck Bay	Nutrients
Suffolk	Shinnecock Bay and Inlet	Nutrients
Suffolk	Tidal tribs to West Moriches Bay	Nutrients
Sullivan	Bodine, Montgomery Lakes	Nutrients
Sullivan	Davies Lake	Nutrients
Sullivan	Evens Lake	Nutrients
Sullivan	Pleasure Lake	Nutrients
Tompkins	Cayuga Lake, Southern End	Nutrients
Tompkins	Cayuga Lake, Southern End	Silt/Sediment
Tompkins	Owasco Inlet, Upper, and tribs	Nutrients
Ulster	Ashokan Reservoir	Silt/Sediment
Ulster	Esopus Creek, Upper, and minor tribs	Silt/Sediment
Warren	Hague Brook and tribs	Silt/Sediment

303(d) Segments Impaired by Construction Related Pollutant(s)

Warren	Huddle/Finkle Brooks and tribs	Silt/Sediment
Warren	Indian Brook and tribs	Silt/Sediment
Warren	Lake George	Silt/Sediment
Warren	Tribs to L.George, Village of L George	Silt/Sediment
Washington	Cossayuna Lake	Nutrients
Washington	Lake Champlain, South Bay	Nutrients
Washington	Tribs to L.George, East Shore	Silt/Sediment
Washington	Wood Cr/Champlain Canal and minor tribs	Nutrients
Wayne	Port Bay	Nutrients
Westchester	Amawalk Reservoir	Nutrients
Westchester	Blind Brook, Upper, and tribs	Silt/Sediment
Westchester	Cross River Reservoir	Nutrients
Westchester	Lake Katonah	Nutrients
Westchester	Lake Lincolndale	Nutrients
Westchester	Lake Meahagh	Nutrients
Westchester	Lake Mohegan	Nutrients
Westchester	Lake Shenorock	Nutrients
Westchester	Long Island Sound, Westchester (East)	Nutrients
Westchester	Mamaroneck River, Lower	Silt/Sediment
Westchester	Mamaroneck River, Upper, and minor tribs	Silt/Sediment
Westchester	Muscoot/Upper New Croton Reservoir	Nutrients
Westchester	New Croton Reservoir	Nutrients
Westchester	Peach Lake	Nutrients
Westchester	Reservoir No.1 (Lake Isle)	Nutrients
Westchester	Saw Mill River, Lower, and tribs	Nutrients
Westchester	Saw Mill River, Middle, and tribs	Nutrients
Westchester	Sheldrake River and tribs	Silt/Sediment
Westchester	Sheldrake River and tribs	Nutrients
Westchester	Silver Lake	Nutrients
Westchester	Teatown Lake	Nutrients
Westchester	Titicus Reservoir	Nutrients
Westchester	Truesdale Lake	Nutrients
Westchester	Wallace Pond	Nutrients
Wyoming	Java Lake	Nutrients
Wyoming	Silver Lake	Nutrients

APPENDIX F – List of NYS DEC Regional Offices

Region	Covering the following counties:	DIVISION OF ENVIRONMENTAL PERMITS (DEP) Permit Administrators	DIVISION OF WATER (DOW) Water (SPDES) Program
1	Nassau and Suffolk	50 Circle Road Stony Brook, NY 11790 Tel. (631) 444-0365	50 Circle Road Stony Brook, NY 11790-3409 Tel. (631) 444-0405
2	Bronx, Kings, New York, Queens and Richmond	1 Hunters Point Plaza, 47-40 21st St. Long Island City, NY 11101-5407 Tel. (718) 482-4997	1 Hunters Point Plaza, 47-40 21st St. Long Island City, NY 11101-5407 Tel. (718) 482-4933
3	Dutchess, Orange, Putnam, Rockland, Sullivan, Ulster and Westchester	21 South Putt Corners Road New Paltz, NY 12561-1696 Tel. (845) 256-3059	100 Hillside Avenue, Suite 1W White Plains, NY 10603 Tel. (914) 428 - 2505
4	Albany, Columbia, Delaware, Greene, Montgomery, Otsego, Rensselaer, Schenectady and Schoharie	1150 North Westcott Road Schenectady, NY 12306-2014 Tel. (518) 357-2069	1130 North Westcott Road Schenectady, NY 12306-2014 Tel. (518) 357-2045
5	Clinton, Essex, Franklin, Fulton, Hamilton, Saratoga, Warren and Washington	1115 State Route 86, Po Box 296 Ray Brook, NY 12977-0296 Tel. (518) 897-1234	232 Golf Course Road Warrensburg, NY 12885-1172 Tel. (518) 623-1200
6	HERKIMER, JEFFERSON, LEWIS, ONEIDA AND ST. LAWRENCE	STATE OFFICE BUILDING 317 WASHINGTON STREET WATERTOWN, NY 13601-3787 TEL. (315) 785-2245	STATE OFFICE BUILDING 207 GENESEE STREET UTICA, NY 13501-2885 TEL. (315) 793-2554
7	BROOME, CAYUGA, CHENANGO, CORTLAND, MADISON, ONONDAGA, OSWEGO, TIOGA AND TOMPKINS	615 ERIE BLVD. WEST SYRACUSE, NY 13204-2400 TEL. (315) 426-7438	615 ERIE BLVD. WEST SYRACUSE, NY 13204-2400 TEL. (315) 426-7500
8	CHEMUNG, GENESEE, LIVINGSTON, MONROE, ONTARIO, ORLEANS, SCHUYLER, SENECA, STEUBEN, WAYNE AND YATES	6274 EAST AVON-LIMA ROADAVON, NY 14414-9519 TEL. (585) 226-2466	6274 EAST AVON-LIMA RD. AVON, NY 14414-9519 TEL. (585) 226-2466
9	ALLEGANY, CATTARAUGUS, CHAUTAUQUA, ERIE, NIAGARA AND WYOMING	270 MICHIGAN AVENUE BUFFALO, NY 14203-2999 TEL. (716) 851-7165	270 MICHIGAN AVENUE BUFFALO, NY 14203-2999 TEL. (716) 851-7070

Submission Confirmation

Construction General Permit (CGP) Request to Continue Coverage (RCC) GP-0-25-001

Alternate Identifier NYR11N830—Caesar's Lane WWTP Expansion Project—Region 3
Submission HQA-5XZ1-B3CJ7 Revision 1 Form Version 1.2

Table of Contents

Table of Contents 1
Construction General Permit (CGP) Request to Continue Coverage (RCC) GP-0-25-001 2
(Submission #: HQA-5XZ1-B3CJ7, version 1) 2
Details 2
Form Input 2
Permit Information 2
Owner/Operator Information 2
Site Information 2
Project Details 3
Owner/Operator Certification 3
Attachments 3
Status History 3
Processing Steps 3

Construction General Permit (CGP) Request to Continue Coverage (RCC) GP-0-25-001

version 1.2

(Submission #: HQA-5XZ1-B3CJ7, version 1)

Details

Originally Started By	Jeremy Valentine
Alternate Identifier	NYR11N830 Caesar's Lane WWTP Expansion Project Region 3
Submission ID	HQA-5XZ1-B3CJ7
Status	Submitting
Active Steps	Form Submitted

Form Input

Permit Information

The owner or operator must meet the requirements in GP-0-25-001 Part I.F.2., to submit this Request to Continue Coverage form. If these requirements are not met, the owner or operator must submit a new eNOI in accordance with GP-0-25-001 Part I.D. to obtain coverage under GP-0-25-001 beyond the interim coverage.

1. SPDES Identification Number
NYR11N830

2. Does the construction activity meet all eligibility requirements listed in Part I.A. of GP-0-25-001?
Yes

3. eNOI Submission Number
HQ9-Z215-GAYVZ

Owner/Operator Information

4. Owner/Operator Name
Town of New Windsor

5. Owner/Operator Contact Person Information

First and Last Name	Phone	E-mail
Stephen Bedetti	845-563-4610	sbedetti@newwindsor-ny.gov

6. Owner/Operator Mailing Address

Town of New Windsor
555 Union Avenue
New Windsor, NY 12553
USA

Site Information

7. Project/Site Name
Caesar's Lane WWTP Expansion Project

8. Site Address

145 Caesars Lane
New Windsor, NY 12553
Orange

DEC Region
3

9. Site Latitude & Longitude
41.4602954,-74.0271319

Project Details

10. Will the owner or operator continue to implement the SMP component in conformance with the technical standards in place at the time of initial project authorization, and comply with all non-design requirements of GP-0-25-001, in accordance with Part I.F.2.a. and I.F.2.b.?
Yes

10.a. Which version of the NYS Stormwater Management Design Manual was used to develop the SWPPP?
2024

Owner/Operator Certification

Owner/Operator Certification Form Download

Download the Owner/Operator Certification Form by clicking the link below.
Owner/Operator Certification Form

11. Upload Owner/Operator Certification Form

Owner-Operator Cert - executed.pdf - 02/05/2025 01:42 PM
Comment
NONE PROVIDED

11.a. Has the Owner/Operator Certification Form from Appendix J been signed by the owner/operator, or a representative of the owner/operator in accordance with Part VII.J of GP-0-25-001 and uploaded to this Request to Continue Coverage?
Yes

Attachments

Date	Attachment Name	Context	User
2/5/2025 1:42 PM	Owner-Operator Cert - executed.pdf	Attachment	Jeremy Valentine

Status History

	User	Processing Status
2/5/2025 9:17:02 AM	Jeremy Valentine	Draft
2/5/2025 1:43:20 PM	Jeremy Valentine	Submitting

Processing Steps

Step Name	Assigned To/Completed By	Date Completed
Form Submitted		
Accepted		

Submission Complete

NOI for coverage under Stormwater General Permit for Construction Activity

Alternate Identifier New Windsor Waste Water Treatment Plant **Submission** HQ9-Z215-GAYVZ
Revision 1 **Form Version** 1.40

Appendix C

WEB SOIL SURVEY

Soil Map—Orange County, New York



Map Scale: 1:2,170 if printed on A portrait (8.5" x 11") sheet.

N

Meters: 0 30 60 120 180

Feet: 0 100 200 400 600

Map projection: Web Mercator Corner coordinates: WGS84 Edge tics: UTM Zone 18N WGS84

MAP LEGEND

Area of Interest (AOI)

- Area of Interest (AOI)

Soils

- Soil Map Unit Polygons
- Soil Map Unit Lines
- Soil Map Unit Points

Special Point Features

- Blowout
- Borrow Pit
- Clay Spot
- Closed Depression
- Gravel Pit
- Gravelly Spot
- Landfill
- Lava Flow
- Marsh or swamp
- Mine or Quarry
- Miscellaneous Water
- Perennial Water
- Rock Outcrop
- Saline Spot
- Sandy Spot
- Severely Eroded Spot
- Sinkhole
- Slide or Slip
- Sodic Spot
- Spoil Area
- Stony Spot
- Very Stony Spot
- Wet Spot
- Other
- Special Line Features

Water Features

- Streams and Canals

Transportation

- Rails
- Interstate Highways
- US Routes
- Major Roads
- Local Roads

Background

- Aerial Photography

MAP INFORMATION

The soil surveys that comprise your AOI were mapped at 1:15,800.

Warning: Soil Map may not be valid at this scale.

Enlargement of maps beyond the scale of mapping can cause misunderstanding of the detail of mapping and accuracy of soil line placement. The maps do not show the small areas of contrasting soils that could have been shown at a more detailed scale.

Please rely on the bar scale on each map sheet for map measurements.

Source of Map: Natural Resources Conservation Service
Web Soil Survey URL:
Coordinate System: Web Mercator (EPSG:3857)

Maps from the Web Soil Survey are based on the Web Mercator projection, which preserves direction and shape but distorts distance and area. A projection that preserves area, such as the Albers equal-area conic projection, should be used if more accurate calculations of distance or area are required.

This product is generated from the USDA-NRCS certified data as of the version date(s) listed below.

Soil Survey Area: Orange County, New York
Survey Area Data: Version 24, Sep 6, 2023

Soil map units are labeled (as space allows) for map scales 1:50,000 or larger.

Date(s) aerial images were photographed: Oct 21, 2022—Oct 27, 2022

The orthophoto or other base map on which the soil lines were compiled and digitized probably differs from the background imagery displayed on these maps. As a result, some minor shifting of map unit boundaries may be evident.

Map Unit Legend

Map Unit Symbol	Map Unit Name	Acres in AOI	Percent of AOI
HoD Soil Group: A	Hoosic gravelly sandy loam, 15 to 25 percent slopes	2.0	8.3%
MdB Soil Group: D	Mardin gravelly silt loam, 3 to 8 percent slopes	11.8	49.1%
OVE Soil Group: A	Otisville and Hoosic soils, steep	2.9	12.2%
RhB Soil Group: A	Riverhead sandy loam, 3 to 8 percent slopes	1.2	4.8%
UH Soil Group: A	Udorthents, smoothed	4.1	17.1%
W	Water	2.0	8.5%
Totals for Area of Interest		**24.1**	**100.0%**

Appendix D

SHPO LETTER

NEW YORK STATE OF OPPORTUNITY. | **Parks, Recreation, and Historic Preservation**

ANDREW M. CUOMO
Governor

ERIK KULLESEID
Commissioner

January 4, 2021

Gerorge Meyers
Supervisor
Town of New Windsor
555 Union Ave.
New Windsor, NY 12553

Re: NYSEFC
New Windsor Wastewater Sewage Treatment Plant Expansion
Town of New Windsor, Orange County, NY
20PR06434

Dear Gerorge Meyers:

Thank you for requesting the comments of the New York State Historic Preservation Office (SHPO). We have reviewed the submitted materials in accordance with Section 106 of the National Historic Preservation Act of 1966. These comments are those of the SHPO and relate only to Historic/Cultural resources. They do not include other environmental impacts to New York State Parkland that may be involved in or near your project. Such impacts must be considered as part of the environmental review of the project pursuant to the National Environmental Policy Act and/or the State Environmental Quality Review Act (New York Environmental Conservation Law Article 8).

SHPO has reviewed *Phase IA Archeological Investigation, Caesars Lane Sewage Treatment Plant, Town of New Windsor, Orange County, New York* (STRATA Cultural Resource Management, November 2020) [20SR00649].

Based upon this review, it is the opinion of the New York SHPO that no historic properties, including archaeological and/or historic resources, will be affected by this undertaking.

If you have any questions, please don't hesitate to contact me.

Sincerely,

Philip A. Perazio, Historic Preservation Program Analyst - Archaeology Unit
Phone: 518-268-2175
e-mail: philip.perazio@parks.ny.gov

via e-mail only

Appendix E

RAINFALL DATA

Extreme Precipitation Tables

Northeast Regional Climate Center

Data represents point estimates calculated from partial duration series. All precipitation amounts are displayed in inches.

Metadata for Point

Smoothing	Yes
State	
Location	
Latitude	41.459 degrees North
Longitude	74.032 degrees West
Elevation	10 feet
Date/Time	Tue Jul 02 2024 13:31:49 GMT-0400 (Eastern Daylight Time)

Extreme Precipitation Estimates

	5min	10min	15min	30min	60min	120min		1hr	2hr	3hr	6hr	12hr	24hr	48hr		1day	2da
1yr	0.33	0.50	0.63	0.82	1.02	1.27	**1yr**	0.88	1.20	1.45	1.77	2.15	2.60	2.98	**1yr**	2.31	2.8
2yr	0.39	0.60	0.75	0.98	1.24	1.54	**2yr**	1.07	1.44	1.76	2.15	2.62	3.17	3.58	**2yr**	2.81	3.4
5yr	0.46	0.71	0.89	1.19	1.53	1.92	**5yr**	1.32	1.77	2.21	2.71	3.30	3.99	4.54	**5yr**	3.53	4.3
10yr	0.51	0.81	1.02	1.38	1.80	2.28	**10yr**	1.55	2.08	2.63	3.23	3.93	4.75	5.44	**10yr**	4.20	5.2
25yr	0.60	0.95	1.21	1.67	2.23	2.85	**25yr**	1.92	2.57	3.31	4.08	4.97	5.98	6.91	**25yr**	5.29	6.6
50yr	0.68	1.09	1.39	1.95	2.62	3.39	**50yr**	2.26	3.02	3.93	4.87	5.92	7.12	8.28	**50yr**	6.31	7.9
100yr	0.77	1.24	1.60	2.27	3.09	4.03	**100yr**	2.67	3.55	4.69	5.81	7.07	8.49	9.93	**100yr**	7.52	9.5
200yr	0.87	1.42	1.84	2.64	3.65	4.79	**200yr**	3.15	4.17	5.59	6.94	8.45	10.14	11.92	**200yr**	8.97	11.4
500yr	1.04	1.72	2.24	3.25	4.56	6.02	**500yr**	3.94	5.17	7.05	8.77	10.68	12.82	15.18	**500yr**	11.34	14.6

Lower Confidence Limits

	5min	10min	15min	30min	60min	120min		1hr	2hr	3hr	6hr	12hr	24hr	48hr		1day	2da
1yr	0.29	0.45	0.54	0.73	0.90	1.09	**1yr**	0.78	1.07	1.23	1.58	2.02	2.11	2.40	**1yr**	1.87	2.3

Appendix F

CALCULATIONS

- Water Quality Calculations
- Runoff Reduction Volume Calculations
- Biobasin Sizing Calculations

09/10/2024
Revised 4/15/2025

Water Quality Calculations

Note: This is a redevelopment project with an increase in impervious surface. Therefore provide 25% of the WQv for the existing impervious surface and 100% of WQv for the new, additional impervious surface.

1 WQv Calculation Formula

WQv=(P*Rv*A)/12

WQv= Water Quality Volume in Acre Feet
P=90% Rainfall in inches
Rv= 0.05+0.009(I); Where I is impervious cover in percent
A=Site Area (Contributing Area)

2 WQv for the Redevelopment Area (25% of Wqv for Existing Impervious)

P=	1.4	input
Impervious Area=Acres	2.55	input
Entire Contributing DA (A)=acres	6.45	input
I=% Impervious	39.53%	
Rv=	0.406	

Results:

WQv=	13302	
WQv (Redevelopment 25%) (CF)	**3326**	required

3 WQv Calculation (Additional Impervious Area)

P=	1.4	input
Additional Impervious Area=Acres	1.35	input
Entire Contributing DA (A)=acres	6.45	input
I=% Impervious	20.93%	
Rv=	0.238	

Results:

WQv (CF)=	**7814**	required

09/10/2024
Revised 4/15/2025

4 Total WQv for Redevelopment is the sum of 25% of the Existing WQv and 100% of the WQv from Proposed Impervious Surfaces

WQvExisting*25%=	3326
WQvProposed	7814
Total WQv Required	**11139**

5 Refer to NYSDEC GI Spreadsheet for Standard NYSDEC Stormwater Management Features Including Three Biobasins and Two Vegetated Swales for WQv Provided.

Summary of WQv Provided with Standard NYSDEC Stormwater Management Features	
Practice	WQv Treated (ft3)
Biobasin 1	2673
Biobasin 2	1828
Biobasin 3	2553
Subtotal	**7054**
Required Total WQv	**11139**
Standard Practice Total Volume Treated (CF)	7054
Remaining Untreated WQv (CF)	**4085**

6 The Remaining WQv Requirement Will Be Provided With NYSDEC Approved Proprietary Treatment Devices

Summary of WQv Provided with Proprietary Devices			
Practice	WQv Storm Flowrate (CFS)	Device Rating (CFS)	WQv Treated (From Hydrocad) (ft3)
Proprietary Device 1 - ADS Barracuda	1.46	1.52	4225
Proprietary Device 2 - ADS Barracuda	0.75	1.52	2178
Proprietary Device 3 - ADS Barracuda	0.68	1.52	1960
Proprietary Device 4 - ADS Barracuda	0.14	1.52	392
Sum Proprietary Devices			8,755
Remaining Untreated WQv			**0**

7 Minimum RRv Calculation - Note, RRv is not required for Redevelopment Area Impervious Surface. RRv Is Required for New Impervious Surface Only.

RRv(min) = P*Rv*Aic*S)/12
P=90% rainfaill in inches
Rv= 0.05+0.009(I); Where I is impervious cover in percent
Aic= Total new area of new impervious cover
S=Factor for Hydrologic Soil Group D (0.2)

P	1.4	input
Rv	0.95	input
Aic	1.35	input
S	0.2	input
Minimum RRv	**1304**	cf required

8

Summary of RRv Provided (From NYSDEC Spreadsheets)	
Practice	RRv Provided (cf)
Biobasin 1	790
Biobasin 2	485
Biobasin 3	1021
Total Provided	2296
Required Minimum RRv	1304
Standard Practice Total RRv provided	2296
Remaining RRv	**0**

Filtration Bioretention (F-5)

Design Point:	1

Enter Site Data For Drainage Area to be Treated by Practice							
Drainage Area Number	**Contributing Area** (Acres)	**Impervious Area** (Acres)	**Percent Impervious** %	**Rv**	**WQv** (cf)	**Precipitation** (in)	**Description**
1	0.23	0.16	70	0.68	790	1.40	0

Design Criteria		
Enter underlying soil infiltration rate (based on geotechnical testing, refer to Appendix D)	0	Underdrains required
Is the contributing area to the practice a stormwater hotspot?	No	
Is the practice the first in series for treatment of a Level 1 (Infiltration Restricted) hotspot?	No	
Is contributing area greater than max. contributing area?	No	
Enter depth to seasonal high water table (ft)	3	
Enter depth to bedrock (ft)	3	
Is pretreatment provided, in conformance with Section 6.4.3.1	Yes	
Enter average height of ponding (ft)	0.5	
Enter depth of surface layer (inches)	3	
Enter depth of filter media (ft)	2.5	
Enter depth of drainage layer (inches)	10	
Enter slope of maintenance access (%)	5	
Enter width of maintenance access (ft)	12	

Sizing Criteria				
		Value	Units	Notes
Permeability Flow Rate	k	1	ft/day	
Filter Time	tf	2	days	
Required Filter Area	Af	329	sf	
Enter Provided Filter Area	Af	1114	sf	
Recalculated Water Quality Volume (based on provided filter area)	WQv calc	2673.6	cf	

Calculate Runoff Reduction			
RRv Provided	**790**	***cf***	
WQv Treated	0	cf	This is the portion of the WQv that is not reduced in the practice.

Filtration Bioretention (F-5)

Design Point:	1

Enter Site Data For Drainage Area to be Treated by Practice							
Drainage Area Number	**Contributing Area** (Acres)	**Impervious Area** (Acres)	**Percent Impervious** %	**Rv**	**WQv** (cf)	**Precipitation** (in)	**Description**
2	0.29	0.09	31	0.33	485	1.40	0

Design Criteria		
Enter underlying soil infiltration rate (based on geotechnical testing, refer to Appendix D)	0	Underdrains required
Is the contributing area to the practice a stormwater hotspot?	No	
Is the practice the first in series for treatment of a Level 1 (Infiltration Restricted) hotspot?	No	
Is contributing area greater than max. contributing area?	No	
Enter depth to seasonal high water table (ft)	3	
Enter depth to bedrock (ft)	3	
Is pretreatment provided, in conformance with Section 6.4.3.1	Yes	
Enter average height of ponding (ft)	0.5	
Enter depth of surface layer (inches)	3	
Enter depth of filter media (ft)	2.5	
Enter depth of drainage layer (inches)	10	
Enter slope of maintenance access (%)	5	
Enter width of maintenance access (ft)	12	

Sizing Criteria				
		Value	Units	Notes
Permeability Flow Rate	k	1	ft/day	
Filter Time	tf	2	days	
Required Filter Area	Af	202	sf	
Enter Provided Filter Area	Af	762	sf	
Recalculated Water Quality Volume (based on provided filter area)	WQv calc	1828.8	cf	

Calculate Runoff Reduction			
RRv Provided	**485**	***cf***	
WQv Treated	0	cf	This is the portion of the WQv that is not reduced in the practice.

Filtration Bioretention (F-5)

Design Point:	1

Enter Site Data For Drainage Area to be Treated by Practice							
Drainage Area Number	**Contributing Area** (Acres)	**Impervious Area** (Acres)	**Percent Impervious** %	**Rv**	**WQv** (cf)	**Precipitation** (in)	**Description**
3	0.58	0.45	78	0.75	2,206	1.40	0

Design Criteria		
Enter underlying soil infiltration rate (based on geotechnical testing, refer to Appendix D)	0	Underdrains required
Is the contributing area to the practice a stormwater hotspot?	No	
Is the practice the first in series for treatment of a Level 1 (Infiltration Restricted) hotspot?	No	
Is contributing area greater than max. contributing area?	No	
Enter depth to seasonal high water table (ft)	3	
Enter depth to bedrock (ft)	3	
Is pretreatment provided, in conformance with Section 6.4.3.1	Yes	
Enter average height of ponding (ft)	0.5	
Enter depth of surface layer (inches)	3	
Enter depth of filter media (ft)	2.5	
Enter depth of drainage layer (inches)	10	
Enter slope of maintenance access (%)	5	
Enter width of maintenance access (ft)	12	

Sizing Criteria				
		Value	Units	Notes
Permeability Flow Rate	k	1	ft/day	
Filter Time	tf	2	days	
Required Filter Area	Af	919	sf	
Enter Provided Filter Area	Af	1064	sf	
Recalculated Water Quality Volume (based on provided filter area)	WQv calc	2553.6	cf	

Calculate Runoff Reduction			
RRv Provided	**1,021**	***cf***	
WQv Treated	1185	cf	This is the portion of the WQv that is not reduced in the practice.

Appendix G

HYDROCAD MODELING OUTPUT

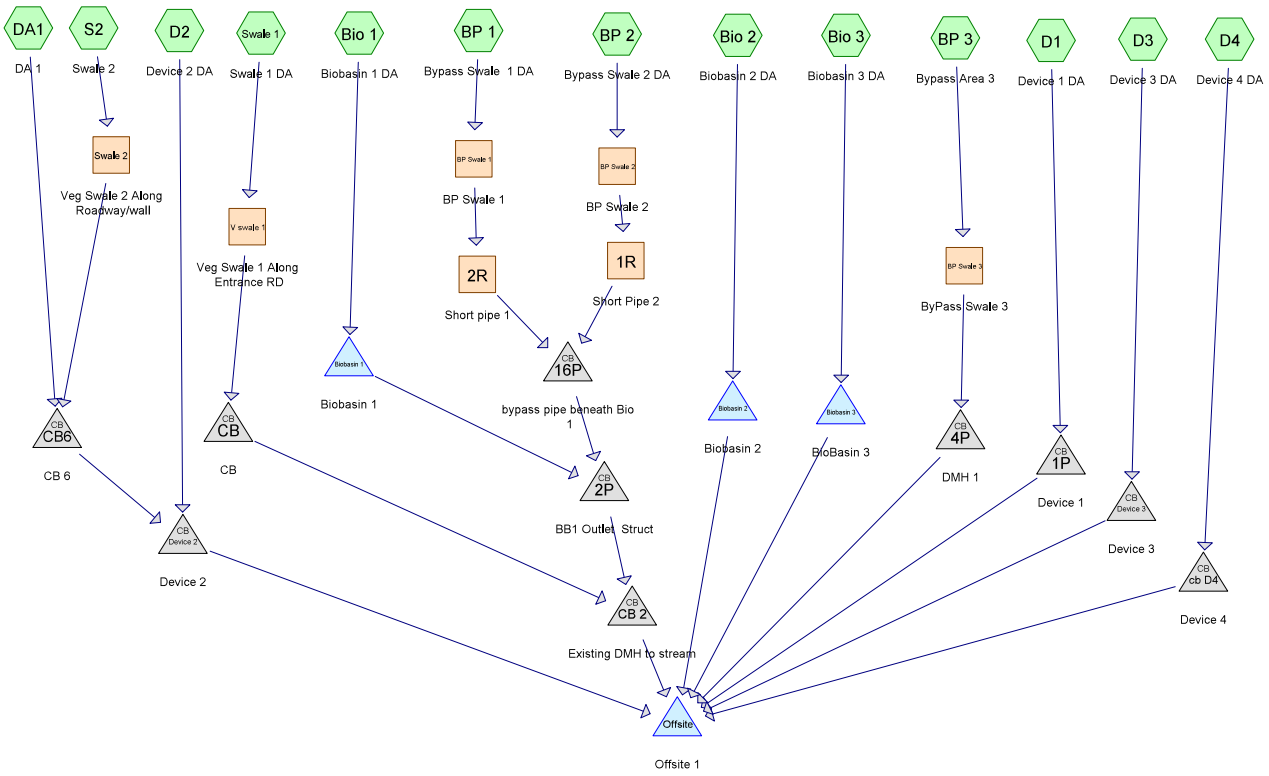

Subcat Reach Pond Link

Routing Diagram for 4-18-25 Post Dev
Prepared by MHE Engineering, Printed 4/15/2025
HydroCAD® 10.20-4c s/n 04138 © 2024 HydroCAD Software Solutions LLC

Area Listing (all nodes)

Area (acres)	CN	Description (subcatchment-numbers)
0.243	98	(S2)
2.212	80	>75% Grass cover, Good, HSG D (Bio 1, Bio 2, Bio 3, D1, D2, D3, D4, DA1, S2, Swale 1)
0.029	96	Gravel surface, HSG D (Bio 3)
0.110	98	Paved parking, HSG C (D4)
0.654	98	Paved parking, HSG D (D2, DA1, Swale 1)
0.030	98	Unconnected pavement, HSG C (BP 3)
2.525	98	Unconnected roofs, HSG D (Bio 1, Bio 2, Bio 3, D1, D3)
0.429	30	Woods, Good, HSG A (BP 1, BP 2, BP 3)
2.898	77	Woods, Good, HSG D (BP 1, BP 2, BP 3)
9.130	**84**	**TOTAL AREA**

Soil Listing (all nodes)

Area (acres)	Soil Group	Subcatchment Numbers
0.429	HSG A	BP 1, BP 2, BP 3
0.000	HSG B	
0.140	HSG C	BP 3, D4
8.318	HSG D	Bio 1, Bio 2, Bio 3, BP 1, BP 2, BP 3, D1, D2, D3, D4, DA1, S2, Swale 1
0.243	Other	S2
9.130		**TOTAL AREA**

Pipe Listing (all nodes)

Line#	Node Number	In-Invert (feet)	Out-Invert (feet)	Length (feet)	Slope (ft/ft)	n	Width (inches)	Diam/Height (inches)	Inside-Fill (inches)	Node Name
1	1R	32.50	31.00	20.0	0.0750	0.013	0.0	18.0	0.0	
2	2R	35.00	32.00	12.0	0.2500	0.013	0.0	18.0	0.0	
3	1P	4.00	3.00	33.0	0.0303	0.013	0.0	18.0	0.0	
4	2P	28.00	26.40	145.0	0.0110	0.013	0.0	30.0	0.0	
5	4P	26.00	24.00	37.0	0.0541	0.013	0.0	24.0	0.0	
6	16P	29.50	29.00	35.0	0.0143	0.013	0.0	24.0	0.0	
7	Biobasin 1	28.00	27.00	140.0	0.0071	0.013	0.0	30.0	0.0	
8	Biobasin 2	27.00	26.00	80.0	0.0125	0.013	0.0	15.0	0.0	
9	Biobasin 3	17.00	11.00	38.0	0.1579	0.013	0.0	15.0	0.0	
10	CB	33.50	30.00	5.0	0.7000	0.013	0.0	18.0	0.0	
11	CB 2	26.00	25.50	45.0	0.0111	0.013	0.0	30.0	0.0	
12	cb D4	9.00	8.00	33.0	0.0303	0.013	0.0	12.0	0.0	
13	CB6	26.50	24.70	65.0	0.0277	0.013	0.0	12.0	0.0	
14	Device 2	25.00	13.00	135.0	0.0889	0.013	0.0	18.0	0.0	
15	Device 3	9.00	8.70	50.0	0.0060	0.013	0.0	18.0	0.0	

Summary for Subcatchment Bio 1: Biobasin 1 DA

Runoff = 0.54 cfs @ 12.09 hrs, Volume= 0.037 af, Depth> 1.77"
Routed to Pond Biobasin 1 : Biobasin 1

Runoff by SCS TR-20 method, UH=SCS, Weighted-CN, Time Span= 5.00-20.00 hrs, dt= 0.03 hrs
Type III 24-hr 1 yr Rainfall=2.60"

Area (ac)	CN	Description
0.180	98	Unconnected roofs, HSG D
0.070	80	>75% Grass cover, Good, HSG D
0.250	93	Weighted Average
0.070		28.00% Pervious Area
0.180		72.00% Impervious Area
0.180		100.00% Unconnected

Tc (min)	Length (feet)	Slope (ft/ft)	Velocity (ft/sec)	Capacity (cfs)	Description
6.0					**Direct Entry, Direct**

Summary for Subcatchment Bio 2: Biobasin 2 DA

Runoff = 0.39 cfs @ 12.09 hrs, Volume= 0.026 af, Depth> 1.37"
Routed to Pond Biobasin 2 : Biobasin 2

Runoff by SCS TR-20 method, UH=SCS, Weighted-CN, Time Span= 5.00-20.00 hrs, dt= 0.03 hrs
Type III 24-hr 1 yr Rainfall=2.60"

Area (ac)	CN	Description
0.100	98	Unconnected roofs, HSG D
0.130	80	>75% Grass cover, Good, HSG D
0.230	88	Weighted Average
0.130		56.52% Pervious Area
0.100		43.48% Impervious Area
0.100		100.00% Unconnected

Tc (min)	Length (feet)	Slope (ft/ft)	Velocity (ft/sec)	Capacity (cfs)	Description
6.0					**Direct Entry,**

Summary for Subcatchment Bio 3: Biobasin 3 DA

Runoff = 1.35 cfs @ 12.09 hrs, Volume= 0.095 af, Depth> 1.95"
Routed to Pond Biobasin 3 : BioBasin 3

Runoff by SCS TR-20 method, UH=SCS, Weighted-CN, Time Span= 5.00-20.00 hrs, dt= 0.03 hrs
Type III 24-hr 1 yr Rainfall=2.60"

Area (ac)	CN	Description
0.455	98	Unconnected roofs, HSG D
0.029	96	Gravel surface, HSG D
0.100	80	>75% Grass cover, Good, HSG D
0.584	95	Weighted Average
0.129		22.09% Pervious Area
0.455		77.91% Impervious Area
0.455		100.00% Unconnected

Tc (min)	Length (feet)	Slope (ft/ft)	Velocity (ft/sec)	Capacity (cfs)	Description
6.0					**Direct Entry,**

Summary for Subcatchment BP 1: Bypass Swale 1 DA

Runoff = 0.08 cfs @ 12.18 hrs, Volume= 0.009 af, Depth> 0.29"
Routed to Reach BP Swale 1 : BP Swale 1

Runoff by SCS TR-20 method, UH=SCS, Weighted-CN, Time Span= 5.00-20.00 hrs, dt= 0.03 hrs
Type III 24-hr 1 yr Rainfall=2.60"

Area (ac)	CN	Description
0.278	77	Woods, Good, HSG D
0.092	30	Woods, Good, HSG A
0.370	65	Weighted Average
0.370		100.00% Pervious Area

Tc (min)	Length (feet)	Slope (ft/ft)	Velocity (ft/sec)	Capacity (cfs)	Description
7.9	100	0.2500	0.21		**Sheet Flow,** Woods: Light underbrush n= 0.400 P2= 3.17"
0.8	68	0.3300	1.44		**Shallow Concentrated Flow,** Forest w/Heavy Litter Kv= 2.5 fps
0.2	47	0.5000	4.95		**Shallow Concentrated Flow,** Short Grass Pasture Kv= 7.0 fps
8.9	215	Total			

Summary for Subcatchment BP 2: Bypass Swale 2 DA

Runoff = 0.24 cfs @ 12.15 hrs, Volume= 0.024 af, Depth> 0.35"
Routed to Reach BP Swale 2 : BP Swale 2

Runoff by SCS TR-20 method, UH=SCS, Weighted-CN, Time Span= 5.00-20.00 hrs, dt= 0.03 hrs
Type III 24-hr 1 yr Rainfall=2.60"

Area (ac)	CN	Description
0.650	77	Woods, Good, HSG D
0.167	30	Woods, Good, HSG A
0.817	67	Weighted Average
0.817		100.00% Pervious Area

Tc (min)	Length (feet)	Slope (ft/ft)	Velocity (ft/sec)	Capacity (cfs)	Description
7.0	100	0.3300	0.24		**Sheet Flow,** Woods: Light underbrush n= 0.400 P2= 3.17"
0.7	70	0.5000	1.77		**Shallow Concentrated Flow,** Forest w/Heavy Litter Kv= 2.5 fps
0.7	60	0.0400	1.40		**Shallow Concentrated Flow,** Short Grass Pasture Kv= 7.0 fps
8.4	230	Total			

Summary for Subcatchment BP 3: Bypass Area 3

Runoff = 1.24 cfs @ 12.14 hrs, Volume= 0.101 af, Depth> 0.56"
Routed to Reach BP Swale 3 : ByPass Swale 3

Runoff by SCS TR-20 method, UH=SCS, Weighted-CN, Time Span= 5.00-20.00 hrs, dt= 0.03 hrs
Type III 24-hr 1 yr Rainfall=2.60"

Area (ac)	CN	Adj	Description
0.170	30		Woods, Good, HSG A
1.970	77		Woods, Good, HSG D
0.030	98		Unconnected pavement, HSG C
2.170	74	73	Weighted Average, UI Adjusted
2.140			98.62% Pervious Area
0.030			1.38% Impervious Area
0.030			100.00% Unconnected

Tc (min)	Length (feet)	Slope (ft/ft)	Velocity (ft/sec)	Capacity (cfs)	Description
7.9	100	0.2500	0.21		**Sheet Flow,** Woods: Light underbrush n= 0.400 P2= 3.17"
0.9	150	0.3330	2.89		**Shallow Concentrated Flow,** Woodland Kv= 5.0 fps
8.8	250	Total			

Summary for Subcatchment D1: Device 1 DA

Runoff = 3.35 cfs @ 12.09 hrs, Volume= 0.226 af, Depth> 1.60"
Routed to Pond 1P : Device 1

Runoff by SCS TR-20 method, UH=SCS, Weighted-CN, Time Span= 5.00-20.00 hrs, dt= 0.03 hrs
Type III 24-hr 1 yr Rainfall=2.60"

Area (ac)	CN	Description
1.050	98	Unconnected roofs, HSG D
0.650	80	>75% Grass cover, Good, HSG D
1.700	91	Weighted Average
0.650		38.24% Pervious Area
1.050		61.76% Impervious Area
1.050		100.00% Unconnected

Tc (min)	Length (feet)	Slope (ft/ft)	Velocity (ft/sec)	Capacity (cfs)	Description
6.0					**Direct Entry,**

Summary for Subcatchment D2: Device 2 DA

Runoff = 1.60 cfs @ 12.09 hrs, Volume= 0.108 af, Depth> 1.52"
Routed to Pond Device 2 : Device 2

Runoff by SCS TR-20 method, UH=SCS, Weighted-CN, Time Span= 5.00-20.00 hrs, dt= 0.03 hrs
Type III 24-hr 1 yr Rainfall=2.60"

Area (ac)	CN	Description
0.460	98	Paved parking, HSG D
0.390	80	>75% Grass cover, Good, HSG D
0.850	90	Weighted Average
0.390		45.88% Pervious Area
0.460		54.12% Impervious Area

Tc (min)	Length (feet)	Slope (ft/ft)	Velocity (ft/sec)	Capacity (cfs)	Description
6.0					**Direct Entry,**

Summary for Subcatchment D3: Device 3 DA

Runoff = 2.12 cfs @ 12.09 hrs, Volume= 0.146 af, Depth> 1.77"
Routed to Pond Device 3 : Device 3

Runoff by SCS TR-20 method, UH=SCS, Weighted-CN, Time Span= 5.00-20.00 hrs, dt= 0.03 hrs
Type III 24-hr 1 yr Rainfall=2.60"

Area (ac)	CN	Description
0.740	98	Unconnected roofs, HSG D
0.250	80	>75% Grass cover, Good, HSG D
0.990	93	Weighted Average
0.250		25.25% Pervious Area
0.740		74.75% Impervious Area
0.740		100.00% Unconnected

Tc (min)	Length (feet)	Slope (ft/ft)	Velocity (ft/sec)	Capacity (cfs)	Description
6.0					**Direct Entry,**

Summary for Subcatchment D4: Device 4 DA

Runoff = 0.35 cfs @ 12.09 hrs, Volume= 0.024 af, Depth> 1.68"
Routed to Pond cb D4 : Device 4

Runoff by SCS TR-20 method, UH=SCS, Weighted-CN, Time Span= 5.00-20.00 hrs, dt= 0.03 hrs
Type III 24-hr 1 yr Rainfall=2.60"

Area (ac)	CN	Description
0.110	98	Paved parking, HSG C
0.060	80	>75% Grass cover, Good, HSG D
0.170	92	Weighted Average
0.060		35.29% Pervious Area
0.110		64.71% Impervious Area

Tc (min)	Length (feet)	Slope (ft/ft)	Velocity (ft/sec)	Capacity (cfs)	Description
6.0					**Direct Entry,**

Summary for Subcatchment DA1: DA 1

Runoff = 0.51 cfs @ 12.09 hrs, Volume= 0.034 af, Depth> 1.52"
Routed to Pond CB6 : CB 6

Runoff by SCS TR-20 method, UH=SCS, Weighted-CN, Time Span= 5.00-20.00 hrs, dt= 0.03 hrs
Type III 24-hr 1 yr Rainfall=2.60"

Area (ac)	CN	Description
0.146	98	Paved parking, HSG D
0.123	80	>75% Grass cover, Good, HSG D
0.269	90	Weighted Average
0.123		45.72% Pervious Area
0.146		54.28% Impervious Area

Tc (min)	Length (feet)	Slope (ft/ft)	Velocity (ft/sec)	Capacity (cfs)	Description
6.0	200		0.56		**Direct Entry,**

Summary for Subcatchment S2: Swale 2

Runoff = 0.67 cfs @ 12.08 hrs, Volume= 0.048 af, Depth> 2.04"
Routed to Reach Swale 2 : Veg Swale 2 Along Roadway/wall

Runoff by SCS TR-20 method, UH=SCS, Weighted-CN, Time Span= 5.00-20.00 hrs, dt= 0.03 hrs
Type III 24-hr 1 yr Rainfall=2.60"

	Area (ac)	CN	Description
*	0.243	98	
	0.037	80	>75% Grass cover, Good, HSG D
	0.280	96	Weighted Average
	0.037		13.21% Pervious Area
	0.243		86.79% Impervious Area

Tc (min)	Length (feet)	Slope (ft/ft)	Velocity (ft/sec)	Capacity (cfs)	Description
6.0					**Direct Entry,**

Summary for Subcatchment Swale 1: Swale 1 DA

Runoff = 0.55 cfs @ 12.09 hrs, Volume= 0.037 af, Depth> 0.99"
Routed to Reach V swale 1 : Veg Swale 1 Along Entrance RD

Runoff by SCS TR-20 method, UH=SCS, Weighted-CN, Time Span= 5.00-20.00 hrs, dt= 0.03 hrs
Type III 24-hr 1 yr Rainfall=2.60"

Area (ac)	CN	Description
0.402	80	>75% Grass cover, Good, HSG D
0.048	98	Paved parking, HSG D
0.450	82	Weighted Average
0.402		89.33% Pervious Area
0.048		10.67% Impervious Area

Tc (min)	Length (feet)	Slope (ft/ft)	Velocity (ft/sec)	Capacity (cfs)	Description
6.0					**Direct Entry,**

Summary for Reach 1R: Short Pipe 2

Inflow Area = 0.817 ac, 0.00% Impervious, Inflow Depth > 0.35" for 1 yr event
Inflow = 0.23 cfs @ 12.20 hrs, Volume= 0.024 af
Outflow = 0.23 cfs @ 12.20 hrs, Volume= 0.024 af, Atten= 0%, Lag= 0.1 min
Routed to Pond 16P : bypass pipe beneath Bio 1

Routing by Stor-Ind+Trans method, Time Span= 5.00-20.00 hrs, dt= 0.03 hrs
Max. Velocity= 4.91 fps, Min. Travel Time= 0.1 min
Avg. Velocity = 2.61 fps, Avg. Travel Time= 0.1 min

Peak Storage= 1 cf @ 12.20 hrs
Average Depth at Peak Storage= 0.10' , Surface Width= 0.73'
Bank-Full Depth= 1.50' Flow Area= 1.8 sf, Capacity= 28.77 cfs

18.0" Round Pipe
n= 0.013 Corrugated PE, smooth interior
Length= 20.0' Slope= 0.0750 '/'
Inlet Invert= 32.50', Outlet Invert= 31.00'

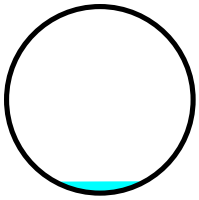

Summary for Reach 2R: Short pipe 1

Inflow Area = 0.370 ac, 0.00% Impervious, Inflow Depth > 0.29" for 1 yr event
Inflow = 0.07 cfs @ 12.23 hrs, Volume= 0.009 af
Outflow = 0.07 cfs @ 12.23 hrs, Volume= 0.009 af, Atten= 0%, Lag= 0.1 min
Routed to Pond 16P : bypass pipe beneath Bio 1

Routing by Stor-Ind+Trans method, Time Span= 5.00-20.00 hrs, dt= 0.03 hrs
Max. Velocity= 5.32 fps, Min. Travel Time= 0.0 min
Avg. Velocity = 3.11 fps, Avg. Travel Time= 0.1 min

Peak Storage= 0 cf @ 12.23 hrs
Average Depth at Peak Storage= 0.04' , Surface Width= 0.50'
Bank-Full Depth= 1.50' Flow Area= 1.8 sf, Capacity= 52.52 cfs

18.0" Round Pipe
n= 0.013 Corrugated PE, smooth interior
Length= 12.0' Slope= 0.2500 '/'
Inlet Invert= 35.00', Outlet Invert= 32.00'

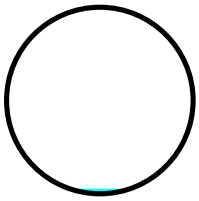

Summary for Reach BP Swale 1: BP Swale 1

Inflow Area = 0.370 ac, 0.00% Impervious, Inflow Depth > 0.29" for 1 yr event
Inflow = 0.08 cfs @ 12.18 hrs, Volume= 0.009 af
Outflow = 0.07 cfs @ 12.23 hrs, Volume= 0.009 af, Atten= 1%, Lag= 2.8 min
Routed to Reach 2R : Short pipe 1

Routing by Stor-Ind+Trans method, Time Span= 5.00-20.00 hrs, dt= 0.03 hrs
Max. Velocity= 1.50 fps, Min. Travel Time= 1.4 min
Avg. Velocity = 0.92 fps, Avg. Travel Time= 2.3 min

Peak Storage= 6 cf @ 12.20 hrs
Average Depth at Peak Storage= 0.05' , Surface Width= 1.18'
Bank-Full Depth= 2.00' Flow Area= 10.0 sf, Capacity= 123.96 cfs

1.00' x 2.00' deep channel, n= 0.035 High grass
Side Slope Z-value= 2.0 '/' Top Width= 9.00'
Length= 130.0' Slope= 0.0846 '/'
Inlet Invert= 46.00', Outlet Invert= 35.00'

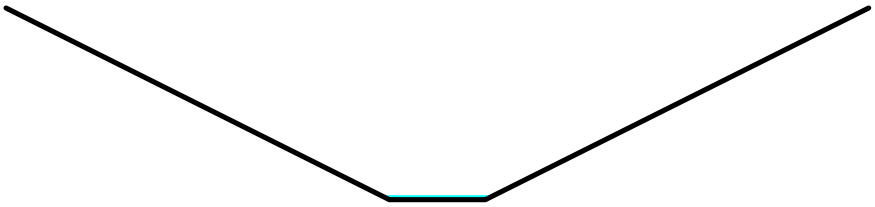

Summary for Reach BP Swale 2: BP Swale 2

Inflow Area = 0.817 ac, 0.00% Impervious, Inflow Depth > 0.35" for 1 yr event
Inflow = 0.24 cfs @ 12.15 hrs, Volume= 0.024 af
Outflow = 0.23 cfs @ 12.20 hrs, Volume= 0.024 af, Atten= 2%, Lag= 2.6 min
Routed to Reach 1R : Short Pipe 2

Routing by Stor-Ind+Trans method, Time Span= 5.00-20.00 hrs, dt= 0.03 hrs
Max. Velocity= 1.74 fps, Min. Travel Time= 1.3 min
Avg. Velocity = 0.91 fps, Avg. Travel Time= 2.5 min

Peak Storage= 19 cf @ 12.17 hrs
Average Depth at Peak Storage= 0.06' , Surface Width= 2.25'
Bank-Full Depth= 2.00' Flow Area= 12.0 sf, Capacity= 145.83 cfs

2.00' x 2.00' deep channel, n= 0.035 High grass
Side Slope Z-value= 2.0 '/' Top Width= 10.00'
Length= 138.0' Slope= 0.0725 '/'
Inlet Invert= 43.00', Outlet Invert= 33.00'



Summary for Reach BP Swale 3: ByPass Swale 3

Inflow Area = 2.170 ac, 1.38% Impervious, Inflow Depth > 0.56" for 1 yr event
Inflow = 1.24 cfs @ 12.14 hrs, Volume= 0.101 af
Outflow = 1.22 cfs @ 12.17 hrs, Volume= 0.101 af, Atten= 2%, Lag= 1.8 min
Routed to Pond 4P : DMH 1

Routing by Stor-Ind+Trans method, Time Span= 5.00-20.00 hrs, dt= 0.03 hrs
Max. Velocity= 2.44 fps, Min. Travel Time= 1.0 min
Avg. Velocity = 1.03 fps, Avg. Travel Time= 2.3 min

Peak Storage= 73 cf @ 12.15 hrs
Average Depth at Peak Storage= 0.21' , Surface Width= 2.84'
Bank-Full Depth= 2.00' Flow Area= 12.0 sf, Capacity= 100.60 cfs

2.00' x 2.00' deep channel, n= 0.035 Earth, dense weeds
Side Slope Z-value= 2.0 '/' Top Width= 10.00'
Length= 145.0' Slope= 0.0345 '/'
Inlet Invert= 39.00', Outlet Invert= 34.00'



Summary for Reach Swale 2: Veg Swale 2 Along Roadway/wall

Inflow Area = 0.280 ac, 86.79% Impervious, Inflow Depth > 2.04" for 1 yr event
Inflow = 0.67 cfs @ 12.08 hrs, Volume= 0.048 af
Outflow = 0.62 cfs @ 12.16 hrs, Volume= 0.047 af, Atten= 7%, Lag= 4.6 min
Routed to Pond CB6 : CB 6

Routing by Stor-Ind+Trans method, Time Span= 5.00-20.00 hrs, dt= 0.03 hrs
Max. Velocity= 1.55 fps, Min. Travel Time= 2.8 min
Avg. Velocity = 0.53 fps, Avg. Travel Time= 8.0 min

Peak Storage= 103 cf @ 12.12 hrs
Average Depth at Peak Storage= 0.16' , Surface Width= 2.97'
Bank-Full Depth= 2.00' Flow Area= 16.0 sf, Capacity= 100.69 cfs

2.00' x 2.00' deep channel, n= 0.035 High grass
Side Slope Z-value= 3.0 '/' Top Width= 14.00'
Length= 256.0' Slope= 0.0195 '/'
Inlet Invert= 36.00', Outlet Invert= 31.00'



Summary for Reach V swale 1: Veg Swale 1 Along Entrance RD

Inflow Area = 0.450 ac, 10.67% Impervious, Inflow Depth > 0.99" for 1 yr event
Inflow = 0.55 cfs @ 12.09 hrs, Volume= 0.037 af
Outflow = 0.54 cfs @ 12.13 hrs, Volume= 0.037 af, Atten= 3%, Lag= 2.3 min
Routed to Pond CB : CB

Routing by Stor-Ind+Trans method, Time Span= 5.00-20.00 hrs, dt= 0.03 hrs
Max. Velocity= 1.87 fps, Min. Travel Time= 1.2 min
Avg. Velocity = 0.72 fps, Avg. Travel Time= 3.2 min

Peak Storage= 41 cf @ 12.11 hrs
Average Depth at Peak Storage= 0.12' , Surface Width= 2.74'
Bank-Full Depth= 2.00' Flow Area= 16.0 sf, Capacity= 142.80 cfs

2.00' x 2.00' deep channel, n= 0.035 High grass
Side Slope Z-value= 3.0 '/' Top Width= 14.00'
Length= 140.0' Slope= 0.0393 '/'
Inlet Invert= 39.00', Outlet Invert= 33.50'



Summary for Pond 1P: Device 1

Inflow Area = 1.700 ac, 61.76% Impervious, Inflow Depth > 1.60" for 1 yr event
Inflow = 3.35 cfs @ 12.09 hrs, Volume= 0.226 af
Outflow = 3.35 cfs @ 12.09 hrs, Volume= 0.226 af, Atten= 0%, Lag= 0.0 min
Primary = 3.35 cfs @ 12.09 hrs, Volume= 0.226 af
Routed to Pond Offsite : Offsite 1

Routing by Stor-Ind method, Time Span= 5.00-20.00 hrs, dt= 0.03 hrs
Peak Elev= 4.87' @ 12.09 hrs

Device	Routing	Invert	Outlet Devices
#1	Primary	4.00'	**18.0" Round Culvert** L= 33.0' CPP, square edge headwall, Ke= 0.500 Inlet / Outlet Invert= 4.00' / 3.00' S= 0.0303 '/' Cc= 0.900 n= 0.013 Corrugated PE, smooth interior, Flow Area= 1.77 sf

Primary OutFlow Max=3.31 cfs @ 12.09 hrs HW=4.86' (Free Discharge)
1=Culvert (Inlet Controls 3.31 cfs @ 3.16 fps)

Summary for Pond 2P: BB1 Outlet Struct

Inflow Area = 1.437 ac, 12.53% Impervious, Inflow Depth > 0.47" for 1 yr event
Inflow = 0.49 cfs @ 12.24 hrs, Volume= 0.056 af
Outflow = 0.49 cfs @ 12.24 hrs, Volume= 0.056 af, Atten= 0%, Lag= 0.0 min
Primary = 0.49 cfs @ 12.24 hrs, Volume= 0.056 af
Routed to Pond CB 2 : Existing DMH to stream

Routing by Stor-Ind method, Time Span= 5.00-20.00 hrs, dt= 0.03 hrs

Peak Elev= 28.27' @ 12.24 hrs

Device	Routing	Invert	Outlet Devices
#1	Primary	28.00'	**30.0" Round Culvert** L= 145.0' CPP, square edge headwall, Ke= 0.500 Inlet / Outlet Invert= 28.00' / 26.40' S= 0.0110 '/' Cc= 0.900 n= 0.013 Corrugated PE, smooth interior, Flow Area= 4.91 sf

Primary OutFlow Max=0.49 cfs @ 12.24 hrs HW=28.26' (Free Discharge)
1=Culvert (Inlet Controls 0.49 cfs @ 1.75 fps)

Summary for Pond 4P: DMH 1

Inflow Area = 2.170 ac, 1.38% Impervious, Inflow Depth > 0.56" for 1 yr event
Inflow = 1.22 cfs @ 12.17 hrs, Volume= 0.101 af
Outflow = 1.22 cfs @ 12.17 hrs, Volume= 0.101 af, Atten= 0%, Lag= 0.0 min
Primary = 1.22 cfs @ 12.17 hrs, Volume= 0.101 af
Routed to Pond Offsite : Offsite 1

Routing by Stor-Ind method, Time Span= 5.00-20.00 hrs, dt= 0.03 hrs
Peak Elev= 26.45' @ 12.17 hrs

Device	Routing	Invert	Outlet Devices
#1	Primary	26.00'	**24.0" Round Culvert** L= 37.0' CPP, square edge headwall, Ke= 0.500 Inlet / Outlet Invert= 26.00' / 24.00' S= 0.0541 '/' Cc= 0.900 n= 0.013 Corrugated PE, smooth interior, Flow Area= 3.14 sf

Primary OutFlow Max=1.22 cfs @ 12.17 hrs HW=26.45' (Free Discharge)
1=Culvert (Inlet Controls 1.22 cfs @ 2.29 fps)

Summary for Pond 16P: bypass pipe beneath Bio 1

Inflow Area = 1.187 ac, 0.00% Impervious, Inflow Depth > 0.33" for 1 yr event
Inflow = 0.31 cfs @ 12.21 hrs, Volume= 0.033 af
Outflow = 0.31 cfs @ 12.21 hrs, Volume= 0.033 af, Atten= 0%, Lag= 0.0 min
Primary = 0.31 cfs @ 12.21 hrs, Volume= 0.033 af
Routed to Pond 2P : BB1 Outlet Struct

Routing by Stor-Ind method, Time Span= 5.00-20.00 hrs, dt= 0.03 hrs
Peak Elev= 29.72' @ 12.21 hrs

Device	Routing	Invert	Outlet Devices
#1	Primary	29.50'	**24.0" Round Culvert** L= 35.0' CPP, square edge headwall, Ke= 0.500 Inlet / Outlet Invert= 29.50' / 29.00' S= 0.0143 '/' Cc= 0.900 n= 0.013 Corrugated PE, smooth interior, Flow Area= 3.14 sf

Primary OutFlow Max=0.30 cfs @ 12.21 hrs HW=29.72' (Free Discharge)
1=Culvert (Inlet Controls 0.30 cfs @ 1.60 fps)

Summary for Pond Biobasin 1: Biobasin 1

Inflow Area = 0.250 ac, 72.00% Impervious, Inflow Depth > 1.77" for 1 yr event
Inflow = 0.54 cfs @ 12.09 hrs, Volume= 0.037 af
Outflow = 0.21 cfs @ 12.33 hrs, Volume= 0.023 af, Atten= 61%, Lag= 14.4 min
Primary = 0.21 cfs @ 12.33 hrs, Volume= 0.023 af
Routed to Pond 2P : BB1 Outlet Struct

Routing by Stor-Ind method, Time Span= 5.00-20.00 hrs, dt= 0.03 hrs
Peak Elev= 34.18' @ 12.33 hrs Surf.Area= 1,278 sf Storage= 780 cf

Plug-Flow detention time= 147.4 min calculated for 0.023 af (62% of inflow)
Center-of-Mass det. time= 75.4 min (844.0 - 768.6)

Volume	Invert	Avail.Storage	Storage Description
#1	33.50'	4,147 cf	**Custom Stage Data (Prismatic)** Listed below (Recalc)

Elevation (feet)	Surf.Area (sq-ft)	Inc.Store (cubic-feet)	Cum.Store (cubic-feet)
33.50	1,114	0	0
34.00	1,138	563	563
35.00	1,915	1,527	2,090
36.00	2,200	2,058	4,147

Device	Routing	Invert	Outlet Devices
#1	Primary	28.00'	**30.0" Round Culvert** L= 140.0' CPP, square edge headwall, Ke= 0.500 Inlet / Outlet Invert= 28.00' / 27.00' S= 0.0071 '/' Cc= 0.900 n= 0.013 Corrugated PE, smooth interior, Flow Area= 4.91 sf
#2	Device 1	34.00'	**4.0" Vert. Orifice/Grate X 3.00** C= 0.600 Limited to weir flow at low heads
#3	Device 1	35.00'	**48.0" x 48.0" Horiz. Orifice/Grate** C= 0.600 Limited to weir flow at low heads

Primary OutFlow Max=0.21 cfs @ 12.33 hrs HW=34.18' (Free Discharge)
└**1=Culvert** (Passes 0.21 cfs of 50.96 cfs potential flow)
├**2=Orifice/Grate** (Orifice Controls 0.21 cfs @ 1.44 fps)
└**3=Orifice/Grate** (Controls 0.00 cfs)

Summary for Pond Biobasin 2: Biobasin 2

Inflow Area = 0.230 ac, 43.48% Impervious, Inflow Depth > 1.37" for 1 yr event
Inflow = 0.39 cfs @ 12.09 hrs, Volume= 0.026 af
Outflow = 0.07 cfs @ 12.58 hrs, Volume= 0.015 af, Atten= 83%, Lag= 29.3 min
Primary = 0.07 cfs @ 12.58 hrs, Volume= 0.015 af
Routed to Pond Offsite : Offsite 1

Routing by Stor-Ind method, Time Span= 5.00-20.00 hrs, dt= 0.03 hrs
Peak Elev= 30.65' @ 12.58 hrs Surf.Area= 1,158 sf Storage= 626 cf

Plug-Flow detention time= 174.5 min calculated for 0.014 af (55% of inflow)

Center-of-Mass det. time= 96.2 min (884.9 - 788.6)

Volume	Invert	Avail.Storage	Storage Description
#1	30.00'	2,737 cf	**Custom Stage Data (Prismatic)** Listed below (Recalc)

Elevation (feet)	Surf.Area (sq-ft)	Inc.Store (cubic-feet)	Cum.Store (cubic-feet)
30.00	765	0	0
32.00	1,972	2,737	2,737

Device	Routing	Invert	Outlet Devices
#1	Primary	27.00'	**15.0" Round Culvert** L= 80.0' CPP, square edge headwall, Ke= 0.500 Inlet / Outlet Invert= 27.00' / 26.00' S= 0.0125 '/' Cc= 0.900 n= 0.013 Corrugated PE, smooth interior, Flow Area= 1.23 sf
#2	Device 1	31.70'	**24.0" x 48.0" Horiz. Orifice/Grate** C= 0.600 Limited to weir flow at low heads
#3	Device 1	30.50'	**6.0" Vert. Orifice/Grate** C= 0.600 Limited to weir flow at low heads

Primary OutFlow Max=0.07 cfs @ 12.58 hrs HW=30.65' (Free Discharge)
└─**1=Culvert** (Passes 0.07 cfs of 9.90 cfs potential flow)
  ├─**2=Orifice/Grate** (Controls 0.00 cfs)
  └─**3=Orifice/Grate** (Orifice Controls 0.07 cfs @ 1.32 fps)

Summary for Pond Biobasin 3: BioBasin 3

Inflow Area = 0.584 ac, 77.91% Impervious, Inflow Depth > 1.95" for 1 yr event
Inflow = 1.35 cfs @ 12.09 hrs, Volume= 0.095 af
Outflow = 1.02 cfs @ 12.15 hrs, Volume= 0.083 af, Atten= 24%, Lag= 4.1 min
Primary = 1.02 cfs @ 12.15 hrs, Volume= 0.083 af
Routed to Pond Offsite : Offsite 1

Routing by Stor-Ind method, Time Span= 5.00-20.00 hrs, dt= 0.03 hrs
Peak Elev= 21.29' @ 12.15 hrs Surf.Area= 1,186 sf Storage= 834 cf

Plug-Flow detention time= 73.2 min calculated for 0.083 af (87% of inflow)
Center-of-Mass det. time= 34.2 min (792.5 - 758.3)

Volume	Invert	Avail.Storage	Storage Description
#1	20.50'	3,487 cf	**Custom Stage Data (Prismatic)** Listed below (Recalc)

Elevation (feet)	Surf.Area (sq-ft)	Inc.Store (cubic-feet)	Cum.Store (cubic-feet)
20.50	960	0	0
21.00	1,064	506	506
22.00	1,482	1,273	1,779
23.00	1,934	1,708	3,487

Device	Routing	Invert	Outlet Devices
#1	Primary	17.00'	**15.0" Round Culvert** L= 38.0' CPP, square edge headwall, Ke= 0.500 Inlet / Outlet Invert= 17.00' / 11.00' S= 0.1579 '/' Cc= 0.900 n= 0.013 Corrugated PE, smooth interior, Flow Area= 1.23 sf
#2	Device 1	21.00'	**6.0" Horiz. Orifice/Grate X 2.00** C= 0.600 Limited to weir flow at low heads
#3	Device 1	22.00'	**24.0" x 48.0" Horiz. Orifice/Grate** C= 0.600 Limited to weir flow at low heads
#4	Primary	22.20'	**8.0' long x 12.0' breadth Broad-Crested Rectangular Weir** Head (feet) 0.20 0.40 0.60 0.80 1.00 1.20 1.40 1.60 Coef. (English) 2.57 2.62 2.70 2.67 2.66 2.67 2.66 2.64

Primary OutFlow Max=1.02 cfs @ 12.15 hrs HW=21.29' (Free Discharge)
└─**1=Culvert** (Passes 1.02 cfs of 11.31 cfs potential flow)
  └─**2=Orifice/Grate** (Orifice Controls 1.02 cfs @ 2.59 fps)
  └─**3=Orifice/Grate** (Controls 0.00 cfs)
└─**4=Broad-Crested Rectangular Weir** (Controls 0.00 cfs)

Summary for Pond CB: CB

Inflow Area = 0.450 ac, 10.67% Impervious, Inflow Depth > 0.99" for 1 yr event
Inflow = 0.54 cfs @ 12.13 hrs, Volume= 0.037 af
Outflow = 0.54 cfs @ 12.13 hrs, Volume= 0.037 af, Atten= 0%, Lag= 0.0 min
Primary = 0.54 cfs @ 12.13 hrs, Volume= 0.037 af
Routed to Pond CB 2 : Existing DMH to stream

Routing by Stor-Ind method, Time Span= 5.00-20.00 hrs, dt= 0.03 hrs
Peak Elev= 33.82' @ 12.13 hrs

Device	Routing	Invert	Outlet Devices
#1	Primary	33.50'	**18.0" Round Culvert** L= 5.0' CPP, square edge headwall, Ke= 0.500 Inlet / Outlet Invert= 33.50' / 30.00' S= 0.7000 '/' Cc= 0.900 n= 0.013 Corrugated PE, smooth interior, Flow Area= 1.77 sf

Primary OutFlow Max=0.53 cfs @ 12.13 hrs HW=33.82' (Free Discharge)
└─**1=Culvert** (Inlet Controls 0.53 cfs @ 1.93 fps)

Summary for Pond CB 2: Existing DMH to stream

Inflow Area = 1.887 ac, 12.08% Impervious, Inflow Depth > 0.59" for 1 yr event
Inflow = 0.92 cfs @ 12.18 hrs, Volume= 0.093 af
Outflow = 0.92 cfs @ 12.18 hrs, Volume= 0.093 af, Atten= 0%, Lag= 0.0 min
Primary = 0.92 cfs @ 12.18 hrs, Volume= 0.093 af
Routed to Pond Offsite : Offsite 1

Routing by Stor-Ind method, Time Span= 5.00-20.00 hrs, dt= 0.03 hrs
Peak Elev= 26.37' @ 12.18 hrs

Device	Routing	Invert	Outlet Devices
#1	Primary	26.00'	**30.0" Round Culvert** L= 45.0' CPP, square edge headwall, Ke= 0.500 Inlet / Outlet Invert= 26.00' / 25.50' S= 0.0111 '/' Cc= 0.900 n= 0.013 Corrugated PE, smooth interior, Flow Area= 4.91 sf

Primary OutFlow Max=0.91 cfs @ 12.18 hrs HW=26.37' (Free Discharge)
1=Culvert (Inlet Controls 0.91 cfs @ 2.06 fps)

Summary for Pond cb D4: Device 4

Inflow Area = 0.170 ac, 64.71% Impervious, Inflow Depth > 1.68" for 1 yr event
Inflow = 0.35 cfs @ 12.09 hrs, Volume= 0.024 af
Outflow = 0.35 cfs @ 12.09 hrs, Volume= 0.024 af, Atten= 0%, Lag= 0.0 min
Primary = 0.35 cfs @ 12.09 hrs, Volume= 0.024 af
Routed to Pond Offsite : Offsite 1

Routing by Stor-Ind method, Time Span= 5.00-20.00 hrs, dt= 0.03 hrs
Peak Elev= 9.29' @ 12.09 hrs

Device	Routing	Invert	Outlet Devices
#1	Primary	9.00'	**12.0" Round Culvert** L= 33.0' CPP, square edge headwall, Ke= 0.500 Inlet / Outlet Invert= 9.00' / 8.00' S= 0.0303 '/' Cc= 0.900 n= 0.013 Corrugated PE, smooth interior, Flow Area= 0.79 sf

Primary OutFlow Max=0.35 cfs @ 12.09 hrs HW=9.29' (Free Discharge)
1=Culvert (Inlet Controls 0.35 cfs @ 1.83 fps)

Summary for Pond CB6: CB 6

Inflow Area = 0.549 ac, 70.86% Impervious, Inflow Depth > 1.78" for 1 yr event
Inflow = 1.03 cfs @ 12.13 hrs, Volume= 0.081 af
Outflow = 1.03 cfs @ 12.13 hrs, Volume= 0.081 af, Atten= 0%, Lag= 0.0 min
Primary = 1.03 cfs @ 12.13 hrs, Volume= 0.081 af
Routed to Pond Device 2 : Device 2

Routing by Stor-Ind method, Time Span= 5.00-20.00 hrs, dt= 0.03 hrs
Peak Elev= 27.03' @ 12.13 hrs

Device	Routing	Invert	Outlet Devices
#1	Primary	26.50'	**12.0" Round Culvert** L= 65.0' CPP, square edge headwall, Ke= 0.500 Inlet / Outlet Invert= 26.50' / 24.70' S= 0.0277 '/' Cc= 0.900 n= 0.013 Corrugated PE, smooth interior, Flow Area= 0.79 sf

Primary OutFlow Max=1.02 cfs @ 12.13 hrs HW=27.02' (Free Discharge)
1=Culvert (Inlet Controls 1.02 cfs @ 2.46 fps)

Summary for Pond Device 2: Device 2

Inflow Area = 1.399 ac, 60.69% Impervious, Inflow Depth > 1.62" for 1 yr event
Inflow = 2.58 cfs @ 12.10 hrs, Volume= 0.189 af
Outflow = 2.58 cfs @ 12.10 hrs, Volume= 0.189 af, Atten= 0%, Lag= 0.0 min
Primary = 2.58 cfs @ 12.10 hrs, Volume= 0.189 af
Routed to Pond Offsite : Offsite 1

Routing by Stor-Ind method, Time Span= 5.00-20.00 hrs, dt= 0.03 hrs
Peak Elev= 25.75' @ 12.10 hrs

Device	Routing	Invert	Outlet Devices
#1	Primary	25.00'	**18.0" Round Culvert** L= 135.0' CPP, square edge headwall, Ke= 0.500 Inlet / Outlet Invert= 25.00' / 13.00' S= 0.0889 '/' Cc= 0.900 n= 0.013 Corrugated PE, smooth interior, Flow Area= 1.77 sf

Primary OutFlow Max=2.55 cfs @ 12.10 hrs HW=25.74' (Free Discharge)
1=Culvert (Inlet Controls 2.55 cfs @ 2.93 fps)

Summary for Pond Device 3: Device 3

Inflow Area = 0.990 ac, 74.75% Impervious, Inflow Depth > 1.77" for 1 yr event
Inflow = 2.12 cfs @ 12.09 hrs, Volume= 0.146 af
Outflow = 2.12 cfs @ 12.09 hrs, Volume= 0.146 af, Atten= 0%, Lag= 0.0 min
Primary = 2.12 cfs @ 12.09 hrs, Volume= 0.146 af
Routed to Pond Offsite : Offsite 1

Routing by Stor-Ind method, Time Span= 5.00-20.00 hrs, dt= 0.03 hrs
Peak Elev= 9.76' @ 12.09 hrs

Device	Routing	Invert	Outlet Devices
#1	Primary	9.00'	**18.0" Round Culvert** L= 50.0' CPP, square edge headwall, Ke= 0.500 Inlet / Outlet Invert= 9.00' / 8.70' S= 0.0060 '/' Cc= 0.900 n= 0.013 Corrugated PE, smooth interior, Flow Area= 1.77 sf

Primary OutFlow Max=2.10 cfs @ 12.09 hrs HW=9.76' (Free Discharge)
1=Culvert (Barrel Controls 2.10 cfs @ 3.42 fps)

Summary for Pond Offsite: Offsite 1

Inflow Area = 9.130 ac, 39.01% Impervious, Inflow Depth > 1.15" for 1 yr event
Inflow = 10.89 cfs @ 12.10 hrs, Volume= 0.876 af
Primary = 10.89 cfs @ 12.10 hrs, Volume= 0.876 af, Atten= 0%, Lag= 0.0 min

Routing by Stor-Ind method, Time Span= 5.00-20.00 hrs, dt= 0.03 hrs

Summary for Subcatchment Bio 1: Biobasin 1 DA

Runoff = 1.09 cfs @ 12.08 hrs, Volume= 0.078 af, Depth> 3.73"
Routed to Pond Biobasin 1 : Biobasin 1

Runoff by SCS TR-20 method, UH=SCS, Weighted-CN, Time Span= 5.00-20.00 hrs, dt= 0.03 hrs
Type III 24-hr 10 yr Rainfall=4.75"

Area (ac)	CN	Description
0.180	98	Unconnected roofs, HSG D
0.070	80	>75% Grass cover, Good, HSG D
0.250	93	Weighted Average
0.070		28.00% Pervious Area
0.180		72.00% Impervious Area
0.180		100.00% Unconnected

Tc (min)	Length (feet)	Slope (ft/ft)	Velocity (ft/sec)	Capacity (cfs)	Description
6.0					**Direct Entry, Direct**

Summary for Subcatchment Bio 2: Biobasin 2 DA

Runoff = 0.90 cfs @ 12.09 hrs, Volume= 0.062 af, Depth> 3.23"
Routed to Pond Biobasin 2 : Biobasin 2

Runoff by SCS TR-20 method, UH=SCS, Weighted-CN, Time Span= 5.00-20.00 hrs, dt= 0.03 hrs
Type III 24-hr 10 yr Rainfall=4.75"

Area (ac)	CN	Description
0.100	98	Unconnected roofs, HSG D
0.130	80	>75% Grass cover, Good, HSG D
0.230	88	Weighted Average
0.130		56.52% Pervious Area
0.100		43.48% Impervious Area
0.100		100.00% Unconnected

Tc (min)	Length (feet)	Slope (ft/ft)	Velocity (ft/sec)	Capacity (cfs)	Description
6.0					**Direct Entry,**

Summary for Subcatchment Bio 3: Biobasin 3 DA

Runoff = 2.62 cfs @ 12.08 hrs, Volume= 0.191 af, Depth> 3.93"
Routed to Pond Biobasin 3 : BioBasin 3

Runoff by SCS TR-20 method, UH=SCS, Weighted-CN, Time Span= 5.00-20.00 hrs, dt= 0.03 hrs
Type III 24-hr 10 yr Rainfall=4.75"

Area (ac)	CN	Description
0.455	98	Unconnected roofs, HSG D
0.029	96	Gravel surface, HSG D
0.100	80	>75% Grass cover, Good, HSG D
0.584	95	Weighted Average
0.129		22.09% Pervious Area
0.455		77.91% Impervious Area
0.455		100.00% Unconnected

Tc (min)	Length (feet)	Slope (ft/ft)	Velocity (ft/sec)	Capacity (cfs)	Description
6.0					**Direct Entry,**

Summary for Subcatchment BP 1: Bypass Swale 1 DA

Runoff = 0.55 cfs @ 12.14 hrs, Volume= 0.042 af, Depth> 1.35"
Routed to Reach BP Swale 1 : BP Swale 1

Runoff by SCS TR-20 method, UH=SCS, Weighted-CN, Time Span= 5.00-20.00 hrs, dt= 0.03 hrs
Type III 24-hr 10 yr Rainfall=4.75"

Area (ac)	CN	Description
0.278	77	Woods, Good, HSG D
0.092	30	Woods, Good, HSG A
0.370	65	Weighted Average
0.370		100.00% Pervious Area

Tc (min)	Length (feet)	Slope (ft/ft)	Velocity (ft/sec)	Capacity (cfs)	Description
7.9	100	0.2500	0.21		**Sheet Flow,** Woods: Light underbrush n= 0.400 P2= 3.17"
0.8	68	0.3300	1.44		**Shallow Concentrated Flow,** Forest w/Heavy Litter Kv= 2.5 fps
0.2	47	0.5000	4.95		**Shallow Concentrated Flow,** Short Grass Pasture Kv= 7.0 fps
8.9	215	Total			

Summary for Subcatchment BP 2: Bypass Swale 2 DA

Runoff = 1.37 cfs @ 12.13 hrs, Volume= 0.101 af, Depth> 1.49"
Routed to Reach BP Swale 2 : BP Swale 2

Runoff by SCS TR-20 method, UH=SCS, Weighted-CN, Time Span= 5.00-20.00 hrs, dt= 0.03 hrs
Type III 24-hr 10 yr Rainfall=4.75"

Area (ac)	CN	Description
0.650	77	Woods, Good, HSG D
0.167	30	Woods, Good, HSG A
0.817	67	Weighted Average
0.817		100.00% Pervious Area

Tc (min)	Length (feet)	Slope (ft/ft)	Velocity (ft/sec)	Capacity (cfs)	Description
7.0	100	0.3300	0.24		**Sheet Flow,** Woods: Light underbrush n= 0.400 P2= 3.17"
0.7	70	0.5000	1.77		**Shallow Concentrated Flow,** Forest w/Heavy Litter Kv= 2.5 fps
0.7	60	0.0400	1.40		**Shallow Concentrated Flow,** Short Grass Pasture Kv= 7.0 fps
8.4	230	Total			

Summary for Subcatchment BP 3: Bypass Area 3

Runoff = 4.74 cfs @ 12.13 hrs, Volume= 0.348 af, Depth> 1.92"
Routed to Reach BP Swale 3 : ByPass Swale 3

Runoff by SCS TR-20 method, UH=SCS, Weighted-CN, Time Span= 5.00-20.00 hrs, dt= 0.03 hrs
Type III 24-hr 10 yr Rainfall=4.75"

Area (ac)	CN	Adj	Description
0.170	30		Woods, Good, HSG A
1.970	77		Woods, Good, HSG D
0.030	98		Unconnected pavement, HSG C
2.170	74	73	Weighted Average, UI Adjusted
2.140			98.62% Pervious Area
0.030			1.38% Impervious Area
0.030			100.00% Unconnected

Tc (min)	Length (feet)	Slope (ft/ft)	Velocity (ft/sec)	Capacity (cfs)	Description
7.9	100	0.2500	0.21		**Sheet Flow,** Woods: Light underbrush n= 0.400 P2= 3.17"
0.9	150	0.3330	2.89		**Shallow Concentrated Flow,** Woodland Kv= 5.0 fps
8.8	250	Total			

Summary for Subcatchment D1: Device 1 DA

Runoff = 7.13 cfs @ 12.09 hrs, Volume= 0.501 af, Depth> 3.53"
Routed to Pond 1P : Device 1

Runoff by SCS TR-20 method, UH=SCS, Weighted-CN, Time Span= 5.00-20.00 hrs, dt= 0.03 hrs
Type III 24-hr 10 yr Rainfall=4.75"

Area (ac)	CN	Description
1.050	98	Unconnected roofs, HSG D
0.650	80	>75% Grass cover, Good, HSG D
1.700	91	Weighted Average
0.650		38.24% Pervious Area
1.050		61.76% Impervious Area
1.050		100.00% Unconnected

Tc (min)	Length (feet)	Slope (ft/ft)	Velocity (ft/sec)	Capacity (cfs)	Description
6.0					**Direct Entry,**

Summary for Subcatchment D2: Device 2 DA

Runoff = 3.49 cfs @ 12.09 hrs, Volume= 0.243 af, Depth> 3.43"
Routed to Pond Device 2 : Device 2

Runoff by SCS TR-20 method, UH=SCS, Weighted-CN, Time Span= 5.00-20.00 hrs, dt= 0.03 hrs
Type III 24-hr 10 yr Rainfall=4.75"

Area (ac)	CN	Description
0.460	98	Paved parking, HSG D
0.390	80	>75% Grass cover, Good, HSG D
0.850	90	Weighted Average
0.390		45.88% Pervious Area
0.460		54.12% Impervious Area

Tc (min)	Length (feet)	Slope (ft/ft)	Velocity (ft/sec)	Capacity (cfs)	Description
6.0					**Direct Entry,**

Summary for Subcatchment D3: Device 3 DA

Runoff = 4.31 cfs @ 12.08 hrs, Volume= 0.308 af, Depth> 3.73"
Routed to Pond Device 3 : Device 3

Runoff by SCS TR-20 method, UH=SCS, Weighted-CN, Time Span= 5.00-20.00 hrs, dt= 0.03 hrs
Type III 24-hr 10 yr Rainfall=4.75"

Area (ac)	CN	Description
0.740	98	Unconnected roofs, HSG D
0.250	80	>75% Grass cover, Good, HSG D
0.990	93	Weighted Average
0.250		25.25% Pervious Area
0.740		74.75% Impervious Area
0.740		100.00% Unconnected

Tc (min)	Length (feet)	Slope (ft/ft)	Velocity (ft/sec)	Capacity (cfs)	Description
6.0					**Direct Entry,**

Summary for Subcatchment D4: Device 4 DA

Runoff = 0.73 cfs @ 12.09 hrs, Volume= 0.051 af, Depth> 3.63"
Routed to Pond cb D4 : Device 4

Runoff by SCS TR-20 method, UH=SCS, Weighted-CN, Time Span= 5.00-20.00 hrs, dt= 0.03 hrs
Type III 24-hr 10 yr Rainfall=4.75"

Area (ac)	CN	Description
0.110	98	Paved parking, HSG C
0.060	80	>75% Grass cover, Good, HSG D
0.170	92	Weighted Average
0.060		35.29% Pervious Area
0.110		64.71% Impervious Area

Tc (min)	Length (feet)	Slope (ft/ft)	Velocity (ft/sec)	Capacity (cfs)	Description
6.0					**Direct Entry,**

Summary for Subcatchment DA1: DA 1

Runoff = 1.10 cfs @ 12.09 hrs, Volume= 0.077 af, Depth> 3.43"
Routed to Pond CB6 : CB 6

Runoff by SCS TR-20 method, UH=SCS, Weighted-CN, Time Span= 5.00-20.00 hrs, dt= 0.03 hrs
Type III 24-hr 10 yr Rainfall=4.75"

Area (ac)	CN	Description
0.146	98	Paved parking, HSG D
0.123	80	>75% Grass cover, Good, HSG D
0.269	90	Weighted Average
0.123		45.72% Pervious Area
0.146		54.28% Impervious Area

Tc (min)	Length (feet)	Slope (ft/ft)	Velocity (ft/sec)	Capacity (cfs)	Description
6.0	200		0.56		**Direct Entry,**

Summary for Subcatchment S2: Swale 2

Runoff = 1.27 cfs @ 12.08 hrs, Volume= 0.094 af, Depth> 4.02"
Routed to Reach Swale 2 : Veg Swale 2 Along Roadway/wall

Runoff by SCS TR-20 method, UH=SCS, Weighted-CN, Time Span= 5.00-20.00 hrs, dt= 0.03 hrs
Type III 24-hr 10 yr Rainfall=4.75"

	Area (ac)	CN	Description
*	0.243	98	
	0.037	80	>75% Grass cover, Good, HSG D
	0.280	96	Weighted Average
	0.037		13.21% Pervious Area
	0.243		86.79% Impervious Area

Tc (min)	Length (feet)	Slope (ft/ft)	Velocity (ft/sec)	Capacity (cfs)	Description
6.0					**Direct Entry,**

Summary for Subcatchment Swale 1: Swale 1 DA

Runoff = 1.50 cfs @ 12.09 hrs, Volume= 0.100 af, Depth> 2.67"
Routed to Reach V swale 1 : Veg Swale 1 Along Entrance RD

Runoff by SCS TR-20 method, UH=SCS, Weighted-CN, Time Span= 5.00-20.00 hrs, dt= 0.03 hrs
Type III 24-hr 10 yr Rainfall=4.75"

Area (ac)	CN	Description
0.402	80	>75% Grass cover, Good, HSG D
0.048	98	Paved parking, HSG D
0.450	82	Weighted Average
0.402		89.33% Pervious Area
0.048		10.67% Impervious Area

Tc (min)	Length (feet)	Slope (ft/ft)	Velocity (ft/sec)	Capacity (cfs)	Description
6.0					**Direct Entry,**

Summary for Reach 1R: Short Pipe 2

Inflow Area = 0.817 ac, 0.00% Impervious, Inflow Depth > 1.49" for 10 yr event
Inflow = 1.35 cfs @ 12.15 hrs, Volume= 0.101 af
Outflow = 1.35 cfs @ 12.15 hrs, Volume= 0.101 af, Atten= 0%, Lag= 0.1 min
Routed to Pond 16P : bypass pipe beneath Bio 1

Routing by Stor-Ind+Trans method, Time Span= 5.00-20.00 hrs, dt= 0.03 hrs
Max. Velocity= 8.31 fps, Min. Travel Time= 0.0 min
Avg. Velocity = 3.61 fps, Avg. Travel Time= 0.1 min

Peak Storage= 3 cf @ 12.15 hrs
Average Depth at Peak Storage= 0.22' , Surface Width= 1.06'
Bank-Full Depth= 1.50' Flow Area= 1.8 sf, Capacity= 28.77 cfs

18.0" Round Pipe
n= 0.013 Corrugated PE, smooth interior
Length= 20.0' Slope= 0.0750 '/'
Inlet Invert= 32.50', Outlet Invert= 31.00'

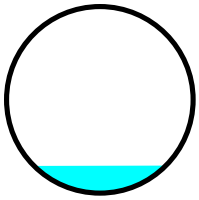

Summary for Reach 2R: Short pipe 1

Inflow Area = 0.370 ac, 0.00% Impervious, Inflow Depth > 1.35" for 10 yr event
Inflow = 0.54 cfs @ 12.16 hrs, Volume= 0.042 af
Outflow = 0.54 cfs @ 12.16 hrs, Volume= 0.042 af, Atten= 0%, Lag= 0.0 min
Routed to Pond 16P : bypass pipe beneath Bio 1

Routing by Stor-Ind+Trans method, Time Span= 5.00-20.00 hrs, dt= 0.03 hrs
Max. Velocity= 9.61 fps, Min. Travel Time= 0.0 min
Avg. Velocity = 4.38 fps, Avg. Travel Time= 0.0 min

Peak Storage= 1 cf @ 12.16 hrs
Average Depth at Peak Storage= 0.11' , Surface Width= 0.77'
Bank-Full Depth= 1.50' Flow Area= 1.8 sf, Capacity= 52.52 cfs

18.0" Round Pipe
n= 0.013 Corrugated PE, smooth interior
Length= 12.0' Slope= 0.2500 '/'
Inlet Invert= 35.00', Outlet Invert= 32.00'

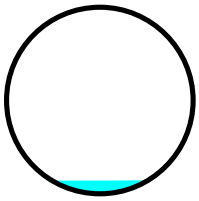

Summary for Reach BP Swale 1: BP Swale 1

Inflow Area = 0.370 ac, 0.00% Impervious, Inflow Depth > 1.35" for 10 yr event
Inflow = 0.55 cfs @ 12.14 hrs, Volume= 0.042 af
Outflow = 0.54 cfs @ 12.16 hrs, Volume= 0.042 af, Atten= 2%, Lag= 1.3 min
Routed to Reach 2R : Short pipe 1

Routing by Stor-Ind+Trans method, Time Span= 5.00-20.00 hrs, dt= 0.03 hrs
Max. Velocity= 2.90 fps, Min. Travel Time= 0.7 min
Avg. Velocity = 1.20 fps, Avg. Travel Time= 1.8 min

Peak Storage= 24 cf @ 12.15 hrs
Average Depth at Peak Storage= 0.15' , Surface Width= 1.58'
Bank-Full Depth= 2.00' Flow Area= 10.0 sf, Capacity= 123.96 cfs

1.00' x 2.00' deep channel, n= 0.035 High grass
Side Slope Z-value= 2.0 '/' Top Width= 9.00'
Length= 130.0' Slope= 0.0846 '/'
Inlet Invert= 46.00', Outlet Invert= 35.00'

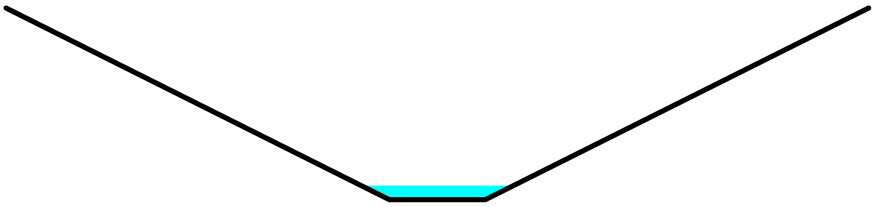

Summary for Reach BP Swale 2: BP Swale 2

Inflow Area = 0.817 ac, 0.00% Impervious, Inflow Depth > 1.49" for 10 yr event
Inflow = 1.37 cfs @ 12.13 hrs, Volume= 0.101 af
Outflow = 1.35 cfs @ 12.15 hrs, Volume= 0.101 af, Atten= 1%, Lag= 1.3 min
Routed to Reach 1R : Short Pipe 2

Routing by Stor-Ind+Trans method, Time Span= 5.00-20.00 hrs, dt= 0.03 hrs
Max. Velocity= 3.23 fps, Min. Travel Time= 0.7 min
Avg. Velocity = 1.23 fps, Avg. Travel Time= 1.9 min

Peak Storage= 58 cf @ 12.14 hrs
Average Depth at Peak Storage= 0.18' , Surface Width= 2.71'
Bank-Full Depth= 2.00' Flow Area= 12.0 sf, Capacity= 145.83 cfs

2.00' x 2.00' deep channel, n= 0.035 High grass
Side Slope Z-value= 2.0 '/' Top Width= 10.00'
Length= 138.0' Slope= 0.0725 '/'
Inlet Invert= 43.00', Outlet Invert= 33.00'



Summary for Reach BP Swale 3: ByPass Swale 3

Inflow Area = 2.170 ac, 1.38% Impervious, Inflow Depth > 1.92" for 10 yr event
Inflow = 4.74 cfs @ 12.13 hrs, Volume= 0.348 af
Outflow = 4.68 cfs @ 12.15 hrs, Volume= 0.348 af, Atten= 1%, Lag= 1.2 min
Routed to Pond 4P : DMH 1

Routing by Stor-Ind+Trans method, Time Span= 5.00-20.00 hrs, dt= 0.03 hrs
Max. Velocity= 3.70 fps, Min. Travel Time= 0.7 min
Avg. Velocity = 1.40 fps, Avg. Travel Time= 1.7 min

Peak Storage= 185 cf @ 12.14 hrs
Average Depth at Peak Storage= 0.44' , Surface Width= 3.77'
Bank-Full Depth= 2.00' Flow Area= 12.0 sf, Capacity= 100.60 cfs

2.00' x 2.00' deep channel, n= 0.035 Earth, dense weeds
Side Slope Z-value= 2.0 '/' Top Width= 10.00'
Length= 145.0' Slope= 0.0345 '/'
Inlet Invert= 39.00', Outlet Invert= 34.00'



Summary for Reach Swale 2: Veg Swale 2 Along Roadway/wall

Inflow Area = 0.280 ac, 86.79% Impervious, Inflow Depth > 4.02" for 10 yr event
Inflow = 1.27 cfs @ 12.08 hrs, Volume= 0.094 af
Outflow = 1.20 cfs @ 12.15 hrs, Volume= 0.094 af, Atten= 5%, Lag= 3.8 min
Routed to Pond CB6 : CB 6

Routing by Stor-Ind+Trans method, Time Span= 5.00-20.00 hrs, dt= 0.03 hrs
Max. Velocity= 1.91 fps, Min. Travel Time= 2.2 min
Avg. Velocity = 0.64 fps, Avg. Travel Time= 6.7 min

Peak Storage= 163 cf @ 12.11 hrs
Average Depth at Peak Storage= 0.24' , Surface Width= 3.41'
Bank-Full Depth= 2.00' Flow Area= 16.0 sf, Capacity= 100.69 cfs

2.00' x 2.00' deep channel, n= 0.035 High grass
Side Slope Z-value= 3.0 '/' Top Width= 14.00'
Length= 256.0' Slope= 0.0195 '/'
Inlet Invert= 36.00', Outlet Invert= 31.00'



Summary for Reach V swale 1: Veg Swale 1 Along Entrance RD

Inflow Area = 0.450 ac, 10.67% Impervious, Inflow Depth > 2.67" for 10 yr event
Inflow = 1.50 cfs @ 12.09 hrs, Volume= 0.100 af
Outflow = 1.46 cfs @ 12.12 hrs, Volume= 0.100 af, Atten= 2%, Lag= 1.6 min
Routed to Pond CB : CB

Routing by Stor-Ind+Trans method, Time Span= 5.00-20.00 hrs, dt= 0.03 hrs
Max. Velocity= 2.58 fps, Min. Travel Time= 0.9 min
Avg. Velocity = 0.87 fps, Avg. Travel Time= 2.7 min

Peak Storage= 80 cf @ 12.10 hrs
Average Depth at Peak Storage= 0.22' , Surface Width= 3.30'
Bank-Full Depth= 2.00' Flow Area= 16.0 sf, Capacity= 142.80 cfs

2.00' x 2.00' deep channel, n= 0.035 High grass
Side Slope Z-value= 3.0 '/' Top Width= 14.00'
Length= 140.0' Slope= 0.0393 '/'
Inlet Invert= 39.00', Outlet Invert= 33.50'



Summary for Pond 1P: Device 1

Inflow Area = 1.700 ac, 61.76% Impervious, Inflow Depth > 3.53" for 10 yr event
Inflow = 7.13 cfs @ 12.09 hrs, Volume= 0.501 af
Outflow = 7.13 cfs @ 12.09 hrs, Volume= 0.501 af, Atten= 0%, Lag= 0.0 min
Primary = 7.13 cfs @ 12.09 hrs, Volume= 0.501 af
Routed to Pond Offsite : Offsite 1

Routing by Stor-Ind method, Time Span= 5.00-20.00 hrs, dt= 0.03 hrs
Peak Elev= 5.44' @ 12.08 hrs

Device	Routing	Invert	Outlet Devices
#1	Primary	4.00'	**18.0" Round Culvert** L= 33.0' CPP, square edge headwall, Ke= 0.500 Inlet / Outlet Invert= 4.00' / 3.00' S= 0.0303 '/' Cc= 0.900 n= 0.013 Corrugated PE, smooth interior, Flow Area= 1.77 sf

Primary OutFlow Max=7.06 cfs @ 12.09 hrs HW=5.43' (Free Discharge)
1=Culvert (Inlet Controls 7.06 cfs @ 4.07 fps)

Summary for Pond 2P: BB1 Outlet Struct

Inflow Area = 1.437 ac, 12.53% Impervious, Inflow Depth > 1.72" for 10 yr event
Inflow = 2.52 cfs @ 12.16 hrs, Volume= 0.207 af
Outflow = 2.52 cfs @ 12.16 hrs, Volume= 0.207 af, Atten= 0%, Lag= 0.0 min
Primary = 2.52 cfs @ 12.16 hrs, Volume= 0.207 af
Routed to Pond CB 2 : Existing DMH to stream

Routing by Stor-Ind method, Time Span= 5.00-20.00 hrs, dt= 0.03 hrs

Peak Elev= 28.62' @ 12.16 hrs

Device	Routing	Invert	Outlet Devices
#1	Primary	28.00'	**30.0" Round Culvert** L= 145.0' CPP, square edge headwall, Ke= 0.500 Inlet / Outlet Invert= 28.00' / 26.40' S= 0.0110 '/' Cc= 0.900 n= 0.013 Corrugated PE, smooth interior, Flow Area= 4.91 sf

Primary OutFlow Max=2.50 cfs @ 12.16 hrs HW=28.61' (Free Discharge)
1=Culvert (Inlet Controls 2.50 cfs @ 2.67 fps)

Summary for Pond 4P: DMH 1

Inflow Area = 2.170 ac, 1.38% Impervious, Inflow Depth > 1.92" for 10 yr event
Inflow = 4.68 cfs @ 12.15 hrs, Volume= 0.348 af
Outflow = 4.68 cfs @ 12.15 hrs, Volume= 0.348 af, Atten= 0%, Lag= 0.0 min
Primary = 4.68 cfs @ 12.15 hrs, Volume= 0.348 af
Routed to Pond Offsite : Offsite 1

Routing by Stor-Ind method, Time Span= 5.00-20.00 hrs, dt= 0.03 hrs
Peak Elev= 26.93' @ 12.15 hrs

Device	Routing	Invert	Outlet Devices
#1	Primary	26.00'	**24.0" Round Culvert** L= 37.0' CPP, square edge headwall, Ke= 0.500 Inlet / Outlet Invert= 26.00' / 24.00' S= 0.0541 '/' Cc= 0.900 n= 0.013 Corrugated PE, smooth interior, Flow Area= 3.14 sf

Primary OutFlow Max=4.64 cfs @ 12.15 hrs HW=26.92' (Free Discharge)
1=Culvert (Inlet Controls 4.64 cfs @ 3.27 fps)

Summary for Pond 16P: bypass pipe beneath Bio 1

Inflow Area = 1.187 ac, 0.00% Impervious, Inflow Depth > 1.44" for 10 yr event
Inflow = 1.88 cfs @ 12.15 hrs, Volume= 0.143 af
Outflow = 1.88 cfs @ 12.15 hrs, Volume= 0.143 af, Atten= 0%, Lag= 0.0 min
Primary = 1.88 cfs @ 12.15 hrs, Volume= 0.143 af
Routed to Pond 2P : BB1 Outlet Struct

Routing by Stor-Ind method, Time Span= 5.00-20.00 hrs, dt= 0.03 hrs
Peak Elev= 30.07' @ 12.15 hrs

Device	Routing	Invert	Outlet Devices
#1	Primary	29.50'	**24.0" Round Culvert** L= 35.0' CPP, square edge headwall, Ke= 0.500 Inlet / Outlet Invert= 29.50' / 29.00' S= 0.0143 '/' Cc= 0.900 n= 0.013 Corrugated PE, smooth interior, Flow Area= 3.14 sf

Primary OutFlow Max=1.86 cfs @ 12.15 hrs HW=30.06' (Free Discharge)
1=Culvert (Inlet Controls 1.86 cfs @ 2.56 fps)

Summary for Pond Biobasin 1: Biobasin 1

Inflow Area = 0.250 ac, 72.00% Impervious, Inflow Depth > 3.73" for 10 yr event
Inflow = 1.09 cfs @ 12.08 hrs, Volume= 0.078 af
Outflow = 0.65 cfs @ 12.19 hrs, Volume= 0.064 af, Atten= 40%, Lag= 6.5 min
Primary = 0.65 cfs @ 12.19 hrs, Volume= 0.064 af
Routed to Pond 2P : BB1 Outlet Struct

Routing by Stor-Ind method, Time Span= 5.00-20.00 hrs, dt= 0.03 hrs
Peak Elev= 34.43' @ 12.19 hrs Surf.Area= 1,473 sf Storage= 1,127 cf

Plug-Flow detention time= 102.7 min calculated for 0.064 af (82% of inflow)
Center-of-Mass det. time= 52.1 min (804.6 - 752.5)

Volume	Invert	Avail.Storage	Storage Description
#1	33.50'	4,147 cf	**Custom Stage Data (Prismatic)** Listed below (Recalc)

Elevation (feet)	Surf.Area (sq-ft)	Inc.Store (cubic-feet)	Cum.Store (cubic-feet)
33.50	1,114	0	0
34.00	1,138	563	563
35.00	1,915	1,527	2,090
36.00	2,200	2,058	4,147

Device	Routing	Invert	Outlet Devices
#1	Primary	28.00'	**30.0" Round Culvert** L= 140.0' CPP, square edge headwall, Ke= 0.500 Inlet / Outlet Invert= 28.00' / 27.00' S= 0.0071 '/' Cc= 0.900 n= 0.013 Corrugated PE, smooth interior, Flow Area= 4.91 sf
#2	Device 1	34.00'	**4.0" Vert. Orifice/Grate X 3.00** C= 0.600 Limited to weir flow at low heads
#3	Device 1	35.00'	**48.0" x 48.0" Horiz. Orifice/Grate** C= 0.600 Limited to weir flow at low heads

Primary OutFlow Max=0.65 cfs @ 12.19 hrs HW=34.43' (Free Discharge)
└**1=Culvert** (Passes 0.65 cfs of 52.32 cfs potential flow)
├**2=Orifice/Grate** (Orifice Controls 0.65 cfs @ 2.48 fps)
└**3=Orifice/Grate** (Controls 0.00 cfs)

Summary for Pond Biobasin 2: Biobasin 2

Inflow Area = 0.230 ac, 43.48% Impervious, Inflow Depth > 3.23" for 10 yr event
Inflow = 0.90 cfs @ 12.09 hrs, Volume= 0.062 af
Outflow = 0.46 cfs @ 12.23 hrs, Volume= 0.050 af, Atten= 49%, Lag= 8.9 min
Primary = 0.46 cfs @ 12.23 hrs, Volume= 0.050 af
Routed to Pond Offsite : Offsite 1

Routing by Stor-Ind method, Time Span= 5.00-20.00 hrs, dt= 0.03 hrs
Peak Elev= 30.98' @ 12.23 hrs Surf.Area= 1,356 sf Storage= 1,040 cf

Plug-Flow detention time= 105.8 min calculated for 0.050 af (80% of inflow)

Center-of-Mass det. time= 54.0 min (822.3 - 768.3)

Volume	Invert	Avail.Storage	Storage Description
#1	30.00'	2,737 cf	**Custom Stage Data (Prismatic)** Listed below (Recalc)

Elevation (feet)	Surf.Area (sq-ft)	Inc.Store (cubic-feet)	Cum.Store (cubic-feet)
30.00	765	0	0
32.00	1,972	2,737	2,737

Device	Routing	Invert	Outlet Devices
#1	Primary	27.00'	**15.0" Round Culvert** L= 80.0' CPP, square edge headwall, Ke= 0.500 Inlet / Outlet Invert= 27.00' / 26.00' S= 0.0125 '/' Cc= 0.900 n= 0.013 Corrugated PE, smooth interior, Flow Area= 1.23 sf
#2	Device 1	31.70'	**24.0" x 48.0" Horiz. Orifice/Grate** C= 0.600 Limited to weir flow at low heads
#3	Device 1	30.50'	**6.0" Vert. Orifice/Grate** C= 0.600 Limited to weir flow at low heads

Primary OutFlow Max=0.46 cfs @ 12.23 hrs HW=30.98' (Free Discharge)
↑└─**1=Culvert** (Passes 0.46 cfs of 10.37 cfs potential flow)
↑ ├─**2=Orifice/Grate** (Controls 0.00 cfs)
 └─**3=Orifice/Grate** (Orifice Controls 0.46 cfs @ 2.36 fps)

Summary for Pond Biobasin 3: BioBasin 3

Inflow Area = 0.584 ac, 77.91% Impervious, Inflow Depth > 3.93" for 10 yr event
Inflow = 2.62 cfs @ 12.08 hrs, Volume= 0.191 af
Outflow = 1.61 cfs @ 12.19 hrs, Volume= 0.179 af, Atten= 39%, Lag= 6.1 min
Primary = 1.61 cfs @ 12.19 hrs, Volume= 0.179 af
Routed to Pond Offsite : Offsite 1

Routing by Stor-Ind method, Time Span= 5.00-20.00 hrs, dt= 0.03 hrs
Peak Elev= 21.72' @ 12.19 hrs Surf.Area= 1,365 sf Storage= 1,382 cf

Plug-Flow detention time= 49.0 min calculated for 0.179 af (93% of inflow)
Center-of-Mass det. time= 25.5 min (771.2 - 745.7)

Volume	Invert	Avail.Storage	Storage Description
#1	20.50'	3,487 cf	**Custom Stage Data (Prismatic)** Listed below (Recalc)

Elevation (feet)	Surf.Area (sq-ft)	Inc.Store (cubic-feet)	Cum.Store (cubic-feet)
20.50	960	0	0
21.00	1,064	506	506
22.00	1,482	1,273	1,779
23.00	1,934	1,708	3,487

Device	Routing	Invert	Outlet Devices
#1	Primary	17.00'	**15.0" Round Culvert** L= 38.0' CPP, square edge headwall, Ke= 0.500 Inlet / Outlet Invert= 17.00' / 11.00' S= 0.1579 '/' Cc= 0.900 n= 0.013 Corrugated PE, smooth interior, Flow Area= 1.23 sf
#2	Device 1	21.00'	**6.0" Horiz. Orifice/Grate X 2.00** C= 0.600 Limited to weir flow at low heads
#3	Device 1	22.00'	**24.0" x 48.0" Horiz. Orifice/Grate** C= 0.600 Limited to weir flow at low heads
#4	Primary	22.20'	**8.0' long x 12.0' breadth Broad-Crested Rectangular Weir** Head (feet) 0.20 0.40 0.60 0.80 1.00 1.20 1.40 1.60 Coef. (English) 2.57 2.62 2.70 2.67 2.66 2.67 2.66 2.64

Primary OutFlow Max=1.60 cfs @ 12.19 hrs HW=21.72' (Free Discharge)
└**1=Culvert** (Passes 1.60 cfs of 11.96 cfs potential flow)
  └**2=Orifice/Grate** (Orifice Controls 1.60 cfs @ 4.08 fps)
  └**3=Orifice/Grate** (Controls 0.00 cfs)
└**4=Broad-Crested Rectangular Weir** (Controls 0.00 cfs)

Summary for Pond CB: CB

Inflow Area = 0.450 ac, 10.67% Impervious, Inflow Depth > 2.67" for 10 yr event
Inflow = 1.46 cfs @ 12.12 hrs, Volume= 0.100 af
Outflow = 1.46 cfs @ 12.12 hrs, Volume= 0.100 af, Atten= 0%, Lag= 0.0 min
Primary = 1.46 cfs @ 12.12 hrs, Volume= 0.100 af
Routed to Pond CB 2 : Existing DMH to stream

Routing by Stor-Ind method, Time Span= 5.00-20.00 hrs, dt= 0.03 hrs
Peak Elev= 34.05' @ 12.12 hrs

Device	Routing	Invert	Outlet Devices
#1	Primary	33.50'	**18.0" Round Culvert** L= 5.0' CPP, square edge headwall, Ke= 0.500 Inlet / Outlet Invert= 33.50' / 30.00' S= 0.7000 '/' Cc= 0.900 n= 0.013 Corrugated PE, smooth interior, Flow Area= 1.77 sf

Primary OutFlow Max=1.45 cfs @ 12.12 hrs HW=34.04' (Free Discharge)
└**1=Culvert** (Inlet Controls 1.45 cfs @ 2.51 fps)

Summary for Pond CB 2: Existing DMH to stream

Inflow Area = 1.887 ac, 12.08% Impervious, Inflow Depth > 1.95" for 10 yr event
Inflow = 3.90 cfs @ 12.14 hrs, Volume= 0.307 af
Outflow = 3.90 cfs @ 12.14 hrs, Volume= 0.307 af, Atten= 0%, Lag= 0.0 min
Primary = 3.90 cfs @ 12.14 hrs, Volume= 0.307 af
Routed to Pond Offsite : Offsite 1

Routing by Stor-Ind method, Time Span= 5.00-20.00 hrs, dt= 0.03 hrs
Peak Elev= 26.80' @ 12.14 hrs

Device	Routing	Invert	Outlet Devices
#1	Primary	26.00'	**30.0" Round Culvert** L= 45.0' CPP, square edge headwall, Ke= 0.500 Inlet / Outlet Invert= 26.00' / 25.50' S= 0.0111 '/' Cc= 0.900 n= 0.013 Corrugated PE, smooth interior, Flow Area= 4.91 sf

Primary OutFlow Max=3.89 cfs @ 12.14 hrs HW=26.80' (Free Discharge)
1=Culvert (Barrel Controls 3.89 cfs @ 4.33 fps)

Summary for Pond cb D4: Device 4

Inflow Area = 0.170 ac, 64.71% Impervious, Inflow Depth > 3.63" for 10 yr event
Inflow = 0.73 cfs @ 12.09 hrs, Volume= 0.051 af
Outflow = 0.73 cfs @ 12.09 hrs, Volume= 0.051 af, Atten= 0%, Lag= 0.0 min
Primary = 0.73 cfs @ 12.09 hrs, Volume= 0.051 af
Routed to Pond Offsite : Offsite 1

Routing by Stor-Ind method, Time Span= 5.00-20.00 hrs, dt= 0.03 hrs
Peak Elev= 9.43' @ 12.09 hrs

Device	Routing	Invert	Outlet Devices
#1	Primary	9.00'	**12.0" Round Culvert** L= 33.0' CPP, square edge headwall, Ke= 0.500 Inlet / Outlet Invert= 9.00' / 8.00' S= 0.0303 '/' Cc= 0.900 n= 0.013 Corrugated PE, smooth interior, Flow Area= 0.79 sf

Primary OutFlow Max=0.72 cfs @ 12.09 hrs HW=9.43' (Free Discharge)
1=Culvert (Inlet Controls 0.72 cfs @ 2.23 fps)

Summary for Pond CB6: CB 6

Inflow Area = 0.549 ac, 70.86% Impervious, Inflow Depth > 3.73" for 10 yr event
Inflow = 2.16 cfs @ 12.12 hrs, Volume= 0.171 af
Outflow = 2.16 cfs @ 12.12 hrs, Volume= 0.171 af, Atten= 0%, Lag= 0.0 min
Primary = 2.16 cfs @ 12.12 hrs, Volume= 0.171 af
Routed to Pond Device 2 : Device 2

Routing by Stor-Ind method, Time Span= 5.00-20.00 hrs, dt= 0.03 hrs
Peak Elev= 27.33' @ 12.12 hrs

Device	Routing	Invert	Outlet Devices
#1	Primary	26.50'	**12.0" Round Culvert** L= 65.0' CPP, square edge headwall, Ke= 0.500 Inlet / Outlet Invert= 26.50' / 24.70' S= 0.0277 '/' Cc= 0.900 n= 0.013 Corrugated PE, smooth interior, Flow Area= 0.79 sf

Primary OutFlow Max=2.15 cfs @ 12.12 hrs HW=27.33' (Free Discharge)
1=Culvert (Inlet Controls 2.15 cfs @ 3.09 fps)

Summary for Pond Device 2: Device 2

Inflow Area = 1.399 ac, 60.69% Impervious, Inflow Depth > 3.55" for 10 yr event
Inflow = 5.58 cfs @ 12.09 hrs, Volume= 0.414 af
Outflow = 5.58 cfs @ 12.09 hrs, Volume= 0.414 af, Atten= 0%, Lag= 0.0 min
Primary = 5.58 cfs @ 12.09 hrs, Volume= 0.414 af
Routed to Pond Offsite : Offsite 1

Routing by Stor-Ind method, Time Span= 5.00-20.00 hrs, dt= 0.03 hrs
Peak Elev= 26.19' @ 12.09 hrs

Device	Routing	Invert	Outlet Devices
#1	Primary	25.00'	**18.0" Round Culvert** L= 135.0' CPP, square edge headwall, Ke= 0.500 Inlet / Outlet Invert= 25.00' / 13.00' S= 0.0889 '/' Cc= 0.900 n= 0.013 Corrugated PE, smooth interior, Flow Area= 1.77 sf

Primary OutFlow Max=5.50 cfs @ 12.09 hrs HW=26.18' (Free Discharge)
1=Culvert (Inlet Controls 5.50 cfs @ 3.70 fps)

Summary for Pond Device 3: Device 3

Inflow Area = 0.990 ac, 74.75% Impervious, Inflow Depth > 3.73" for 10 yr event
Inflow = 4.31 cfs @ 12.08 hrs, Volume= 0.308 af
Outflow = 4.31 cfs @ 12.08 hrs, Volume= 0.308 af, Atten= 0%, Lag= 0.0 min
Primary = 4.31 cfs @ 12.08 hrs, Volume= 0.308 af
Routed to Pond Offsite : Offsite 1

Routing by Stor-Ind method, Time Span= 5.00-20.00 hrs, dt= 0.03 hrs
Peak Elev= 10.16' @ 12.08 hrs

Device	Routing	Invert	Outlet Devices
#1	Primary	9.00'	**18.0" Round Culvert** L= 50.0' CPP, square edge headwall, Ke= 0.500 Inlet / Outlet Invert= 9.00' / 8.70' S= 0.0060 '/' Cc= 0.900 n= 0.013 Corrugated PE, smooth interior, Flow Area= 1.77 sf

Primary OutFlow Max=4.27 cfs @ 12.08 hrs HW=10.15' (Free Discharge)
1=Culvert (Barrel Controls 4.27 cfs @ 4.04 fps)

Summary for Pond Offsite: Offsite 1

Inflow Area = 9.130 ac, 39.01% Impervious, Inflow Depth > 2.83" for 10 yr event
Inflow = 27.10 cfs @ 12.11 hrs, Volume= 2.157 af
Primary = 27.10 cfs @ 12.11 hrs, Volume= 2.157 af, Atten= 0%, Lag= 0.0 min

Routing by Stor-Ind method, Time Span= 5.00-20.00 hrs, dt= 0.03 hrs

Summary for Subcatchment Bio 1: Biobasin 1 DA

Runoff = 2.03 cfs @ 12.08 hrs, Volume= 0.150 af, Depth> 7.18"
Routed to Pond Biobasin 1 : Biobasin 1

Runoff by SCS TR-20 method, UH=SCS, Weighted-CN, Time Span= 5.00-20.00 hrs, dt= 0.03 hrs
Type III 24-hr 100 yr Rainfall=8.49"

Area (ac)	CN	Description
0.180	98	Unconnected roofs, HSG D
0.070	80	>75% Grass cover, Good, HSG D
0.250	93	Weighted Average
0.070		28.00% Pervious Area
0.180		72.00% Impervious Area
0.180		100.00% Unconnected

Tc (min)	Length (feet)	Slope (ft/ft)	Velocity (ft/sec)	Capacity (cfs)	Description
6.0					**Direct Entry, Direct**

Summary for Subcatchment Bio 2: Biobasin 2 DA

Runoff = 1.79 cfs @ 12.08 hrs, Volume= 0.128 af, Depth> 6.66"
Routed to Pond Biobasin 2 : Biobasin 2

Runoff by SCS TR-20 method, UH=SCS, Weighted-CN, Time Span= 5.00-20.00 hrs, dt= 0.03 hrs
Type III 24-hr 100 yr Rainfall=8.49"

Area (ac)	CN	Description
0.100	98	Unconnected roofs, HSG D
0.130	80	>75% Grass cover, Good, HSG D
0.230	88	Weighted Average
0.130		56.52% Pervious Area
0.100		43.48% Impervious Area
0.100		100.00% Unconnected

Tc (min)	Length (feet)	Slope (ft/ft)	Velocity (ft/sec)	Capacity (cfs)	Description
6.0					**Direct Entry,**

Summary for Subcatchment Bio 3: Biobasin 3 DA

Runoff = 4.79 cfs @ 12.08 hrs, Volume= 0.359 af, Depth> 7.37"
Routed to Pond Biobasin 3 : BioBasin 3

Runoff by SCS TR-20 method, UH=SCS, Weighted-CN, Time Span= 5.00-20.00 hrs, dt= 0.03 hrs
Type III 24-hr 100 yr Rainfall=8.49"

Area (ac)	CN	Description
0.455	98	Unconnected roofs, HSG D
0.029	96	Gravel surface, HSG D
0.100	80	>75% Grass cover, Good, HSG D
0.584	95	Weighted Average
0.129		22.09% Pervious Area
0.455		77.91% Impervious Area
0.455		100.00% Unconnected

Tc (min)	Length (feet)	Slope (ft/ft)	Velocity (ft/sec)	Capacity (cfs)	Description
6.0					**Direct Entry,**

Summary for Subcatchment BP 1: Bypass Swale 1 DA

Runoff = 1.67 cfs @ 12.13 hrs, Volume= 0.123 af, Depth> 3.98"
Routed to Reach BP Swale 1 : BP Swale 1

Runoff by SCS TR-20 method, UH=SCS, Weighted-CN, Time Span= 5.00-20.00 hrs, dt= 0.03 hrs
Type III 24-hr 100 yr Rainfall=8.49"

Area (ac)	CN	Description
0.278	77	Woods, Good, HSG D
0.092	30	Woods, Good, HSG A
0.370	65	Weighted Average
0.370		100.00% Pervious Area

Tc (min)	Length (feet)	Slope (ft/ft)	Velocity (ft/sec)	Capacity (cfs)	Description
7.9	100	0.2500	0.21		**Sheet Flow,** Woods: Light underbrush n= 0.400 P2= 3.17"
0.8	68	0.3300	1.44		**Shallow Concentrated Flow,** Forest w/Heavy Litter Kv= 2.5 fps
0.2	47	0.5000	4.95		**Shallow Concentrated Flow,** Short Grass Pasture Kv= 7.0 fps
8.9	215	Total			

Summary for Subcatchment BP 2: Bypass Swale 2 DA

Runoff = 3.98 cfs @ 12.12 hrs, Volume= 0.287 af, Depth> 4.21"
Routed to Reach BP Swale 2 : BP Swale 2

Runoff by SCS TR-20 method, UH=SCS, Weighted-CN, Time Span= 5.00-20.00 hrs, dt= 0.03 hrs
Type III 24-hr 100 yr Rainfall=8.49"

Area (ac)	CN	Description
0.650	77	Woods, Good, HSG D
0.167	30	Woods, Good, HSG A
0.817	67	Weighted Average
0.817		100.00% Pervious Area

Tc (min)	Length (feet)	Slope (ft/ft)	Velocity (ft/sec)	Capacity (cfs)	Description
7.0	100	0.3300	0.24		**Sheet Flow,** Woods: Light underbrush n= 0.400 P2= 3.17"
0.7	70	0.5000	1.77		**Shallow Concentrated Flow,** Forest w/Heavy Litter Kv= 2.5 fps
0.7	60	0.0400	1.40		**Shallow Concentrated Flow,** Short Grass Pasture Kv= 7.0 fps
8.4	230	Total			

Summary for Subcatchment BP 3: Bypass Area 3

Runoff = 12.05 cfs @ 12.12 hrs, Volume= 0.888 af, Depth> 4.91"
Routed to Reach BP Swale 3 : ByPass Swale 3

Runoff by SCS TR-20 method, UH=SCS, Weighted-CN, Time Span= 5.00-20.00 hrs, dt= 0.03 hrs
Type III 24-hr 100 yr Rainfall=8.49"

Area (ac)	CN	Adj	Description
0.170	30		Woods, Good, HSG A
1.970	77		Woods, Good, HSG D
0.030	98		Unconnected pavement, HSG C
2.170	74	73	Weighted Average, UI Adjusted
2.140			98.62% Pervious Area
0.030			1.38% Impervious Area
0.030			100.00% Unconnected

Tc (min)	Length (feet)	Slope (ft/ft)	Velocity (ft/sec)	Capacity (cfs)	Description
7.9	100	0.2500	0.21		**Sheet Flow,** Woods: Light underbrush n= 0.400 P2= 3.17"
0.9	150	0.3330	2.89		**Shallow Concentrated Flow,** Woodland Kv= 5.0 fps
8.8	250	Total			

Summary for Subcatchment D1: Device 1 DA

Runoff = 13.58 cfs @ 12.08 hrs, Volume= 0.989 af, Depth> 6.98"
Routed to Pond 1P : Device 1

Runoff by SCS TR-20 method, UH=SCS, Weighted-CN, Time Span= 5.00-20.00 hrs, dt= 0.03 hrs
Type III 24-hr 100 yr Rainfall=8.49"

Area (ac)	CN	Description
1.050	98	Unconnected roofs, HSG D
0.650	80	>75% Grass cover, Good, HSG D
1.700	91	Weighted Average
0.650		38.24% Pervious Area
1.050		61.76% Impervious Area
1.050		100.00% Unconnected

Tc (min)	Length (feet)	Slope (ft/ft)	Velocity (ft/sec)	Capacity (cfs)	Description
6.0					**Direct Entry,**

Summary for Subcatchment D2: Device 2 DA

Runoff = 6.73 cfs @ 12.08 hrs, Volume= 0.487 af, Depth> 6.88"
Routed to Pond Device 2 : Device 2

Runoff by SCS TR-20 method, UH=SCS, Weighted-CN, Time Span= 5.00-20.00 hrs, dt= 0.03 hrs
Type III 24-hr 100 yr Rainfall=8.49"

Area (ac)	CN	Description
0.460	98	Paved parking, HSG D
0.390	80	>75% Grass cover, Good, HSG D
0.850	90	Weighted Average
0.390		45.88% Pervious Area
0.460		54.12% Impervious Area

Tc (min)	Length (feet)	Slope (ft/ft)	Velocity (ft/sec)	Capacity (cfs)	Description
6.0					**Direct Entry,**

Summary for Subcatchment D3: Device 3 DA

Runoff = 8.03 cfs @ 12.08 hrs, Volume= 0.593 af, Depth> 7.18"
Routed to Pond Device 3 : Device 3

Runoff by SCS TR-20 method, UH=SCS, Weighted-CN, Time Span= 5.00-20.00 hrs, dt= 0.03 hrs
Type III 24-hr 100 yr Rainfall=8.49"

Area (ac)	CN	Description
0.740	98	Unconnected roofs, HSG D
0.250	80	>75% Grass cover, Good, HSG D
0.990	93	Weighted Average
0.250		25.25% Pervious Area
0.740		74.75% Impervious Area
0.740		100.00% Unconnected

Tc (min)	Length (feet)	Slope (ft/ft)	Velocity (ft/sec)	Capacity (cfs)	Description
6.0					**Direct Entry,**

Summary for Subcatchment D4: Device 4 DA

Runoff = 1.37 cfs @ 12.08 hrs, Volume= 0.100 af, Depth> 7.08"
Routed to Pond cb D4 : Device 4

Runoff by SCS TR-20 method, UH=SCS, Weighted-CN, Time Span= 5.00-20.00 hrs, dt= 0.03 hrs
Type III 24-hr 100 yr Rainfall=8.49"

Area (ac)	CN	Description
0.110	98	Paved parking, HSG C
0.060	80	>75% Grass cover, Good, HSG D
0.170	92	Weighted Average
0.060		35.29% Pervious Area
0.110		64.71% Impervious Area

Tc (min)	Length (feet)	Slope (ft/ft)	Velocity (ft/sec)	Capacity (cfs)	Description
6.0					**Direct Entry,**

Summary for Subcatchment DA1: DA 1

Runoff = 2.13 cfs @ 12.08 hrs, Volume= 0.154 af, Depth> 6.88"
Routed to Pond CB6 : CB 6

Runoff by SCS TR-20 method, UH=SCS, Weighted-CN, Time Span= 5.00-20.00 hrs, dt= 0.03 hrs
Type III 24-hr 100 yr Rainfall=8.49"

Area (ac)	CN	Description
0.146	98	Paved parking, HSG D
0.123	80	>75% Grass cover, Good, HSG D
0.269	90	Weighted Average
0.123		45.72% Pervious Area
0.146		54.28% Impervious Area

Tc (min)	Length (feet)	Slope (ft/ft)	Velocity (ft/sec)	Capacity (cfs)	Description
6.0	200		0.56		**Direct Entry,**

Summary for Subcatchment S2: Swale 2

Runoff = 2.31 cfs @ 12.08 hrs, Volume= 0.174 af, Depth> 7.45"
Routed to Reach Swale 2 : Veg Swale 2 Along Roadway/wall

Runoff by SCS TR-20 method, UH=SCS, Weighted-CN, Time Span= 5.00-20.00 hrs, dt= 0.03 hrs
Type III 24-hr 100 yr Rainfall=8.49"

	Area (ac)	CN	Description
*	0.243	98	
	0.037	80	>75% Grass cover, Good, HSG D
	0.280	96	Weighted Average
	0.037		13.21% Pervious Area
	0.243		86.79% Impervious Area

Tc (min)	Length (feet)	Slope (ft/ft)	Velocity (ft/sec)	Capacity (cfs)	Description
6.0					**Direct Entry,**

Summary for Subcatchment Swale 1: Swale 1 DA

Runoff = 3.23 cfs @ 12.09 hrs, Volume= 0.224 af, Depth> 5.97"
Routed to Reach V swale 1 : Veg Swale 1 Along Entrance RD

Runoff by SCS TR-20 method, UH=SCS, Weighted-CN, Time Span= 5.00-20.00 hrs, dt= 0.03 hrs
Type III 24-hr 100 yr Rainfall=8.49"

Area (ac)	CN	Description
0.402	80	>75% Grass cover, Good, HSG D
0.048	98	Paved parking, HSG D
0.450	82	Weighted Average
0.402		89.33% Pervious Area
0.048		10.67% Impervious Area

Tc (min)	Length (feet)	Slope (ft/ft)	Velocity (ft/sec)	Capacity (cfs)	Description
6.0					**Direct Entry,**

Summary for Reach 1R: Short Pipe 2

Inflow Area = 0.817 ac, 0.00% Impervious, Inflow Depth > 4.21" for 100 yr event
Inflow = 3.93 cfs @ 12.14 hrs, Volume= 0.287 af
Outflow = 3.93 cfs @ 12.14 hrs, Volume= 0.287 af, Atten= 0%, Lag= 0.1 min
Routed to Pond 16P : bypass pipe beneath Bio 1

Routing by Stor-Ind+Trans method, Time Span= 5.00-20.00 hrs, dt= 0.03 hrs
Max. Velocity= 11.40 fps, Min. Travel Time= 0.0 min
Avg. Velocity = 4.48 fps, Avg. Travel Time= 0.1 min

Peak Storage= 7 cf @ 12.14 hrs
Average Depth at Peak Storage= 0.37' , Surface Width= 1.30'
Bank-Full Depth= 1.50' Flow Area= 1.8 sf, Capacity= 28.77 cfs

18.0" Round Pipe
n= 0.013 Corrugated PE, smooth interior
Length= 20.0' Slope= 0.0750 '/'
Inlet Invert= 32.50', Outlet Invert= 31.00'

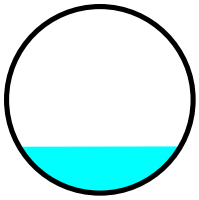

Summary for Reach 2R: Short pipe 1

Inflow Area = 0.370 ac, 0.00% Impervious, Inflow Depth > 3.98" for 100 yr event
Inflow = 1.66 cfs @ 12.14 hrs, Volume= 0.123 af
Outflow = 1.66 cfs @ 12.15 hrs, Volume= 0.123 af, Atten= 0%, Lag= 0.0 min
Routed to Pond 16P : bypass pipe beneath Bio 1

Routing by Stor-Ind+Trans method, Time Span= 5.00-20.00 hrs, dt= 0.03 hrs
Max. Velocity= 13.50 fps, Min. Travel Time= 0.0 min
Avg. Velocity = 5.41 fps, Avg. Travel Time= 0.0 min

Peak Storage= 1 cf @ 12.14 hrs
Average Depth at Peak Storage= 0.18' , Surface Width= 0.98'
Bank-Full Depth= 1.50' Flow Area= 1.8 sf, Capacity= 52.52 cfs

18.0" Round Pipe
n= 0.013 Corrugated PE, smooth interior
Length= 12.0' Slope= 0.2500 '/'
Inlet Invert= 35.00', Outlet Invert= 32.00'

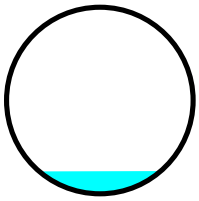

Summary for Reach BP Swale 1: BP Swale 1

Inflow Area = 0.370 ac, 0.00% Impervious, Inflow Depth > 3.98" for 100 yr event
Inflow = 1.67 cfs @ 12.13 hrs, Volume= 0.123 af
Outflow = 1.66 cfs @ 12.14 hrs, Volume= 0.123 af, Atten= 1%, Lag= 1.0 min
Routed to Reach 2R : Short pipe 1

Routing by Stor-Ind+Trans method, Time Span= 5.00-20.00 hrs, dt= 0.03 hrs
Max. Velocity= 4.05 fps, Min. Travel Time= 0.5 min
Avg. Velocity = 1.55 fps, Avg. Travel Time= 1.4 min

Peak Storage= 54 cf @ 12.14 hrs
Average Depth at Peak Storage= 0.27' , Surface Width= 2.07'
Bank-Full Depth= 2.00' Flow Area= 10.0 sf, Capacity= 123.96 cfs

1.00' x 2.00' deep channel, n= 0.035 High grass
Side Slope Z-value= 2.0 '/' Top Width= 9.00'
Length= 130.0' Slope= 0.0846 '/'
Inlet Invert= 46.00', Outlet Invert= 35.00'

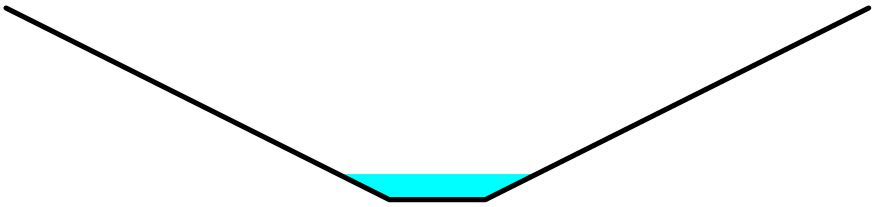

Summary for Reach BP Swale 2: BP Swale 2

Inflow Area = 0.817 ac, 0.00% Impervious, Inflow Depth > 4.21" for 100 yr event
Inflow = 3.98 cfs @ 12.12 hrs, Volume= 0.287 af
Outflow = 3.93 cfs @ 12.14 hrs, Volume= 0.287 af, Atten= 1%, Lag= 1.0 min
Routed to Reach 1R : Short Pipe 2

Routing by Stor-Ind+Trans method, Time Span= 5.00-20.00 hrs, dt= 0.03 hrs
Max. Velocity= 4.54 fps, Min. Travel Time= 0.5 min
Avg. Velocity = 1.59 fps, Avg. Travel Time= 1.4 min

Peak Storage= 120 cf @ 12.13 hrs
Average Depth at Peak Storage= 0.33' , Surface Width= 3.31'
Bank-Full Depth= 2.00' Flow Area= 12.0 sf, Capacity= 145.83 cfs

2.00' x 2.00' deep channel, n= 0.035 High grass
Side Slope Z-value= 2.0 '/' Top Width= 10.00'
Length= 138.0' Slope= 0.0725 '/'
Inlet Invert= 43.00', Outlet Invert= 33.00'



Summary for Reach BP Swale 3: ByPass Swale 3

Inflow Area = 2.170 ac, 1.38% Impervious, Inflow Depth > 4.91" for 100 yr event
Inflow = 12.05 cfs @ 12.12 hrs, Volume= 0.888 af
Outflow = 11.91 cfs @ 12.14 hrs, Volume= 0.887 af, Atten= 1%, Lag= 1.0 min
Routed to Pond 4P : DMH 1

Routing by Stor-Ind+Trans method, Time Span= 5.00-20.00 hrs, dt= 0.03 hrs
Max. Velocity= 4.81 fps, Min. Travel Time= 0.5 min
Avg. Velocity = 1.74 fps, Avg. Travel Time= 1.4 min

Peak Storage= 362 cf @ 12.13 hrs
Average Depth at Peak Storage= 0.72' , Surface Width= 4.90'
Bank-Full Depth= 2.00' Flow Area= 12.0 sf, Capacity= 100.60 cfs

2.00' x 2.00' deep channel, n= 0.035 Earth, dense weeds
Side Slope Z-value= 2.0 '/' Top Width= 10.00'
Length= 145.0' Slope= 0.0345 '/'
Inlet Invert= 39.00', Outlet Invert= 34.00'

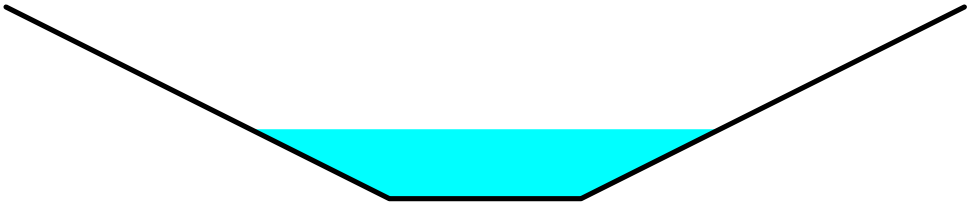

Summary for Reach Swale 2: Veg Swale 2 Along Roadway/wall

Inflow Area = 0.280 ac, 86.79% Impervious, Inflow Depth > 7.45" for 100 yr event
Inflow = 2.31 cfs @ 12.08 hrs, Volume= 0.174 af
Outflow = 2.22 cfs @ 12.14 hrs, Volume= 0.173 af, Atten= 4%, Lag= 3.2 min
Routed to Pond CB6 : CB 6

Routing by Stor-Ind+Trans method, Time Span= 5.00-20.00 hrs, dt= 0.03 hrs
Max. Velocity= 2.29 fps, Min. Travel Time= 1.9 min
Avg. Velocity = 0.80 fps, Avg. Travel Time= 5.3 min

Peak Storage= 249 cf @ 12.11 hrs
Average Depth at Peak Storage= 0.33' , Surface Width= 3.96'
Bank-Full Depth= 2.00' Flow Area= 16.0 sf, Capacity= 100.69 cfs

2.00' x 2.00' deep channel, n= 0.035 High grass
Side Slope Z-value= 3.0 '/' Top Width= 14.00'
Length= 256.0' Slope= 0.0195 '/'
Inlet Invert= 36.00', Outlet Invert= 31.00'



Summary for Reach V swale 1: Veg Swale 1 Along Entrance RD

Inflow Area = 0.450 ac, 10.67% Impervious, Inflow Depth > 5.97" for 100 yr event
Inflow = 3.23 cfs @ 12.09 hrs, Volume= 0.224 af
Outflow = 3.16 cfs @ 12.11 hrs, Volume= 0.224 af, Atten= 2%, Lag= 1.3 min
Routed to Pond CB : CB

Routing by Stor-Ind+Trans method, Time Span= 5.00-20.00 hrs, dt= 0.03 hrs
Max. Velocity= 3.25 fps, Min. Travel Time= 0.7 min
Avg. Velocity = 1.06 fps, Avg. Travel Time= 2.2 min

Peak Storage= 138 cf @ 12.09 hrs
Average Depth at Peak Storage= 0.33' , Surface Width= 3.98'
Bank-Full Depth= 2.00' Flow Area= 16.0 sf, Capacity= 142.80 cfs

2.00' x 2.00' deep channel, n= 0.035 High grass
Side Slope Z-value= 3.0 '/' Top Width= 14.00'
Length= 140.0' Slope= 0.0393 '/'
Inlet Invert= 39.00', Outlet Invert= 33.50'



Summary for Pond 1P: Device 1

Inflow Area = 1.700 ac, 61.76% Impervious, Inflow Depth > 6.98" for 100 yr event
Inflow = 13.58 cfs @ 12.08 hrs, Volume= 0.989 af
Outflow = 13.58 cfs @ 12.08 hrs, Volume= 0.989 af, Atten= 0%, Lag= 0.0 min
Primary = 13.58 cfs @ 12.08 hrs, Volume= 0.989 af
Routed to Pond Offsite : Offsite 1

Routing by Stor-Ind method, Time Span= 5.00-20.00 hrs, dt= 0.03 hrs
Peak Elev= 7.30' @ 12.08 hrs

Device	Routing	Invert	Outlet Devices
#1	Primary	4.00'	**18.0" Round Culvert** L= 33.0' CPP, square edge headwall, Ke= 0.500 Inlet / Outlet Invert= 4.00' / 3.00' S= 0.0303 '/' Cc= 0.900 n= 0.013 Corrugated PE, smooth interior, Flow Area= 1.77 sf

Primary OutFlow Max=13.47 cfs @ 12.08 hrs HW=7.26' (Free Discharge)
1=Culvert (Inlet Controls 13.47 cfs @ 7.62 fps)

Summary for Pond 2P: BB1 Outlet Struct

Inflow Area = 1.437 ac, 12.53% Impervious, Inflow Depth > 4.55" for 100 yr event
Inflow = 6.54 cfs @ 12.14 hrs, Volume= 0.544 af
Outflow = 6.54 cfs @ 12.14 hrs, Volume= 0.544 af, Atten= 0%, Lag= 0.0 min
Primary = 6.54 cfs @ 12.14 hrs, Volume= 0.544 af
Routed to Pond CB 2 : Existing DMH to stream

Routing by Stor-Ind method, Time Span= 5.00-20.00 hrs, dt= 0.03 hrs

Peak Elev= 29.03' @ 12.14 hrs

Device	Routing	Invert	Outlet Devices
#1	Primary	28.00'	**30.0" Round Culvert** L= 145.0' CPP, square edge headwall, Ke= 0.500 Inlet / Outlet Invert= 28.00' / 26.40' S= 0.0110 '/' Cc= 0.900 n= 0.013 Corrugated PE, smooth interior, Flow Area= 4.91 sf

Primary OutFlow Max=6.52 cfs @ 12.14 hrs HW=29.02' (Free Discharge)
↑—**1=Culvert** (Inlet Controls 6.52 cfs @ 3.45 fps)

Summary for Pond 4P: DMH 1

Inflow Area = 2.170 ac, 1.38% Impervious, Inflow Depth > 4.90" for 100 yr event
Inflow = 11.91 cfs @ 12.14 hrs, Volume= 0.887 af
Outflow = 11.91 cfs @ 12.14 hrs, Volume= 0.887 af, Atten= 0%, Lag= 0.0 min
Primary = 11.91 cfs @ 12.14 hrs, Volume= 0.887 af
Routed to Pond Offsite : Offsite 1

Routing by Stor-Ind method, Time Span= 5.00-20.00 hrs, dt= 0.03 hrs
Peak Elev= 27.63' @ 12.14 hrs

Device	Routing	Invert	Outlet Devices
#1	Primary	26.00'	**24.0" Round Culvert** L= 37.0' CPP, square edge headwall, Ke= 0.500 Inlet / Outlet Invert= 26.00' / 24.00' S= 0.0541 '/' Cc= 0.900 n= 0.013 Corrugated PE, smooth interior, Flow Area= 3.14 sf

Primary OutFlow Max=11.91 cfs @ 12.14 hrs HW=27.63' (Free Discharge)
↑—**1=Culvert** (Inlet Controls 11.91 cfs @ 4.35 fps)

Summary for Pond 16P: bypass pipe beneath Bio 1

Inflow Area = 1.187 ac, 0.00% Impervious, Inflow Depth > 4.14" for 100 yr event
Inflow = 5.58 cfs @ 12.14 hrs, Volume= 0.409 af
Outflow = 5.58 cfs @ 12.14 hrs, Volume= 0.409 af, Atten= 0%, Lag= 0.0 min
Primary = 5.58 cfs @ 12.14 hrs, Volume= 0.409 af
Routed to Pond 2P : BB1 Outlet Struct

Routing by Stor-Ind method, Time Span= 5.00-20.00 hrs, dt= 0.03 hrs
Peak Elev= 30.54' @ 12.14 hrs

Device	Routing	Invert	Outlet Devices
#1	Primary	29.50'	**24.0" Round Culvert** L= 35.0' CPP, square edge headwall, Ke= 0.500 Inlet / Outlet Invert= 29.50' / 29.00' S= 0.0143 '/' Cc= 0.900 n= 0.013 Corrugated PE, smooth interior, Flow Area= 3.14 sf

Primary OutFlow Max=5.58 cfs @ 12.14 hrs HW=30.54' (Free Discharge)
↑—**1=Culvert** (Barrel Controls 5.58 cfs @ 4.89 fps)

Summary for Pond Biobasin 1: Biobasin 1

Inflow Area = 0.250 ac, 72.00% Impervious, Inflow Depth > 7.18" for 100 yr event
Inflow = 2.03 cfs @ 12.08 hrs, Volume= 0.150 af
Outflow = 1.00 cfs @ 12.23 hrs, Volume= 0.135 af, Atten= 51%, Lag= 9.0 min
Primary = 1.00 cfs @ 12.23 hrs, Volume= 0.135 af
Routed to Pond 2P : BB1 Outlet Struct

Routing by Stor-Ind method, Time Span= 5.00-20.00 hrs, dt= 0.03 hrs
Peak Elev= 34.79' @ 12.23 hrs Surf.Area= 1,755 sf Storage= 1,711 cf

Plug-Flow detention time= 74.3 min calculated for 0.135 af (90% of inflow)
Center-of-Mass det. time= 41.4 min (783.8 - 742.4)

Volume	Invert	Avail.Storage	Storage Description
#1	33.50'	4,147 cf	**Custom Stage Data (Prismatic)** Listed below (Recalc)

Elevation (feet)	Surf.Area (sq-ft)	Inc.Store (cubic-feet)	Cum.Store (cubic-feet)
33.50	1,114	0	0
34.00	1,138	563	563
35.00	1,915	1,527	2,090
36.00	2,200	2,058	4,147

Device	Routing	Invert	Outlet Devices
#1	Primary	28.00'	**30.0" Round Culvert** L= 140.0' CPP, square edge headwall, Ke= 0.500 Inlet / Outlet Invert= 28.00' / 27.00' S= 0.0071 '/' Cc= 0.900 n= 0.013 Corrugated PE, smooth interior, Flow Area= 4.91 sf
#2	Device 1	34.00'	**4.0" Vert. Orifice/Grate X 3.00** C= 0.600 Limited to weir flow at low heads
#3	Device 1	35.00'	**48.0" x 48.0" Horiz. Orifice/Grate** C= 0.600 Limited to weir flow at low heads

Primary OutFlow Max=1.00 cfs @ 12.23 hrs HW=34.79' (Free Discharge)
└**1=Culvert** (Passes 1.00 cfs of 54.20 cfs potential flow)
├**2=Orifice/Grate** (Orifice Controls 1.00 cfs @ 3.81 fps)
└**3=Orifice/Grate** (Controls 0.00 cfs)

Summary for Pond Biobasin 2: Biobasin 2

Inflow Area = 0.230 ac, 43.48% Impervious, Inflow Depth > 6.66" for 100 yr event
Inflow = 1.79 cfs @ 12.08 hrs, Volume= 0.128 af
Outflow = 0.78 cfs @ 12.27 hrs, Volume= 0.115 af, Atten= 56%, Lag= 11.3 min
Primary = 0.78 cfs @ 12.27 hrs, Volume= 0.115 af
Routed to Pond Offsite : Offsite 1

Routing by Stor-Ind method, Time Span= 5.00-20.00 hrs, dt= 0.03 hrs
Peak Elev= 31.43' @ 12.27 hrs Surf.Area= 1,626 sf Storage= 1,706 cf

Plug-Flow detention time= 79.0 min calculated for 0.115 af (90% of inflow)

Center-of-Mass det. time= 45.3 min (798.1 - 752.8)

Volume	Invert	Avail.Storage	Storage Description
#1	30.00'	2,737 cf	**Custom Stage Data (Prismatic)** Listed below (Recalc)

Elevation (feet)	Surf.Area (sq-ft)	Inc.Store (cubic-feet)	Cum.Store (cubic-feet)
30.00	765	0	0
32.00	1,972	2,737	2,737

Device	Routing	Invert	Outlet Devices
#1	Primary	27.00'	**15.0" Round Culvert** L= 80.0' CPP, square edge headwall, Ke= 0.500 Inlet / Outlet Invert= 27.00' / 26.00' S= 0.0125 '/' Cc= 0.900 n= 0.013 Corrugated PE, smooth interior, Flow Area= 1.23 sf
#2	Device 1	31.70'	**24.0" x 48.0" Horiz. Orifice/Grate** C= 0.600 Limited to weir flow at low heads
#3	Device 1	30.50'	**6.0" Vert. Orifice/Grate** C= 0.600 Limited to weir flow at low heads

Primary OutFlow Max=0.78 cfs @ 12.27 hrs HW=31.43' (Free Discharge)
↑└─**1=Culvert** (Passes 0.78 cfs of 10.97 cfs potential flow)
↑ ├─**2=Orifice/Grate** (Controls 0.00 cfs)
 └─**3=Orifice/Grate** (Orifice Controls 0.78 cfs @ 3.96 fps)

Summary for Pond Biobasin 3: BioBasin 3

Inflow Area = 0.584 ac, 77.91% Impervious, Inflow Depth > 7.37" for 100 yr event
Inflow = 4.79 cfs @ 12.08 hrs, Volume= 0.359 af
Outflow = 4.58 cfs @ 12.12 hrs, Volume= 0.346 af, Atten= 5%, Lag= 2.2 min
Primary = 4.58 cfs @ 12.12 hrs, Volume= 0.346 af
Routed to Pond Offsite : Offsite 1

Routing by Stor-Ind method, Time Span= 5.00-20.00 hrs, dt= 0.03 hrs
Peak Elev= 22.16' @ 12.12 hrs Surf.Area= 1,555 sf Storage= 2,024 cf

Plug-Flow detention time= 32.7 min calculated for 0.346 af (97% of inflow)
Center-of-Mass det. time= 18.3 min (756.5 - 738.3)

Volume	Invert	Avail.Storage	Storage Description
#1	20.50'	3,487 cf	**Custom Stage Data (Prismatic)** Listed below (Recalc)

Elevation (feet)	Surf.Area (sq-ft)	Inc.Store (cubic-feet)	Cum.Store (cubic-feet)
20.50	960	0	0
21.00	1,064	506	506
22.00	1,482	1,273	1,779
23.00	1,934	1,708	3,487

Device	Routing	Invert	Outlet Devices
#1	Primary	17.00'	**15.0" Round Culvert** L= 38.0' CPP, square edge headwall, Ke= 0.500 Inlet / Outlet Invert= 17.00' / 11.00' S= 0.1579 '/' Cc= 0.900 n= 0.013 Corrugated PE, smooth interior, Flow Area= 1.23 sf
#2	Device 1	21.00'	**6.0" Horiz. Orifice/Grate X 2.00** C= 0.600 Limited to weir flow at low heads
#3	Device 1	22.00'	**24.0" x 48.0" Horiz. Orifice/Grate** C= 0.600 Limited to weir flow at low heads
#4	Primary	22.20'	**8.0' long x 12.0' breadth Broad-Crested Rectangular Weir** Head (feet) 0.20 0.40 0.60 0.80 1.00 1.20 1.40 1.60 Coef. (English) 2.57 2.62 2.70 2.67 2.66 2.67 2.66 2.64

Primary OutFlow Max=4.41 cfs @ 12.12 hrs HW=22.15' (Free Discharge)
- **1=Culvert** (Passes 4.41 cfs of 12.58 cfs potential flow)
  - **2=Orifice/Grate** (Orifice Controls 2.03 cfs @ 5.17 fps)
  - **3=Orifice/Grate** (Weir Controls 2.38 cfs @ 1.28 fps)
- **4=Broad-Crested Rectangular Weir** (Controls 0.00 cfs)

Summary for Pond CB: CB

Inflow Area = 0.450 ac, 10.67% Impervious, Inflow Depth > 5.96" for 100 yr event
Inflow = 3.16 cfs @ 12.11 hrs, Volume= 0.224 af
Outflow = 3.16 cfs @ 12.11 hrs, Volume= 0.224 af, Atten= 0%, Lag= 0.0 min
Primary = 3.16 cfs @ 12.11 hrs, Volume= 0.224 af
Routed to Pond CB 2 : Existing DMH to stream

Routing by Stor-Ind method, Time Span= 5.00-20.00 hrs, dt= 0.03 hrs
Peak Elev= 34.34' @ 12.11 hrs

Device	Routing	Invert	Outlet Devices
#1	Primary	33.50'	**18.0" Round Culvert** L= 5.0' CPP, square edge headwall, Ke= 0.500 Inlet / Outlet Invert= 33.50' / 30.00' S= 0.7000 '/' Cc= 0.900 n= 0.013 Corrugated PE, smooth interior, Flow Area= 1.77 sf

Primary OutFlow Max=3.15 cfs @ 12.11 hrs HW=34.34' (Free Discharge)
- **1=Culvert** (Inlet Controls 3.15 cfs @ 3.11 fps)

Summary for Pond CB 2: Existing DMH to stream

Inflow Area = 1.887 ac, 12.08% Impervious, Inflow Depth > 4.88" for 100 yr event
Inflow = 9.54 cfs @ 12.13 hrs, Volume= 0.768 af
Outflow = 9.54 cfs @ 12.13 hrs, Volume= 0.768 af, Atten= 0%, Lag= 0.0 min
Primary = 9.54 cfs @ 12.13 hrs, Volume= 0.768 af
Routed to Pond Offsite : Offsite 1

Routing by Stor-Ind method, Time Span= 5.00-20.00 hrs, dt= 0.03 hrs
Peak Elev= 27.34' @ 12.13 hrs

Device	Routing	Invert	Outlet Devices
#1	Primary	26.00'	**30.0" Round Culvert** L= 45.0' CPP, square edge headwall, Ke= 0.500 Inlet / Outlet Invert= 26.00' / 25.50' S= 0.0111 '/' Cc= 0.900 n= 0.013 Corrugated PE, smooth interior, Flow Area= 4.91 sf

Primary OutFlow Max=9.45 cfs @ 12.13 hrs HW=27.33' (Free Discharge)
1=Culvert (Barrel Controls 9.45 cfs @ 5.16 fps)

Summary for Pond cb D4: Device 4

Inflow Area = 0.170 ac, 64.71% Impervious, Inflow Depth > 7.08" for 100 yr event
Inflow = 1.37 cfs @ 12.08 hrs, Volume= 0.100 af
Outflow = 1.37 cfs @ 12.08 hrs, Volume= 0.100 af, Atten= 0%, Lag= 0.0 min
Primary = 1.37 cfs @ 12.08 hrs, Volume= 0.100 af
Routed to Pond Offsite : Offsite 1

Routing by Stor-Ind method, Time Span= 5.00-20.00 hrs, dt= 0.03 hrs
Peak Elev= 9.62' @ 12.08 hrs

Device	Routing	Invert	Outlet Devices
#1	Primary	9.00'	**12.0" Round Culvert** L= 33.0' CPP, square edge headwall, Ke= 0.500 Inlet / Outlet Invert= 9.00' / 8.00' S= 0.0303 '/' Cc= 0.900 n= 0.013 Corrugated PE, smooth interior, Flow Area= 0.79 sf

Primary OutFlow Max=1.36 cfs @ 12.08 hrs HW=9.62' (Free Discharge)
1=Culvert (Inlet Controls 1.36 cfs @ 2.67 fps)

Summary for Pond CB6: CB 6

Inflow Area = 0.549 ac, 70.86% Impervious, Inflow Depth > 7.16" for 100 yr event
Inflow = 4.15 cfs @ 12.11 hrs, Volume= 0.328 af
Outflow = 4.15 cfs @ 12.11 hrs, Volume= 0.328 af, Atten= 0%, Lag= 0.0 min
Primary = 4.15 cfs @ 12.11 hrs, Volume= 0.328 af
Routed to Pond Device 2 : Device 2

Routing by Stor-Ind method, Time Span= 5.00-20.00 hrs, dt= 0.03 hrs
Peak Elev= 28.20' @ 12.11 hrs

Device	Routing	Invert	Outlet Devices
#1	Primary	26.50'	**12.0" Round Culvert** L= 65.0' CPP, square edge headwall, Ke= 0.500 Inlet / Outlet Invert= 26.50' / 24.70' S= 0.0277 '/' Cc= 0.900 n= 0.013 Corrugated PE, smooth interior, Flow Area= 0.79 sf

Primary OutFlow Max=4.14 cfs @ 12.11 hrs HW=28.20' (Free Discharge)
1=Culvert (Inlet Controls 4.14 cfs @ 5.27 fps)

Summary for Pond Device 2: Device 2

Inflow Area = 1.399 ac, 60.69% Impervious, Inflow Depth > 6.99" for 100 yr event
Inflow = 10.76 cfs @ 12.09 hrs, Volume= 0.815 af
Outflow = 10.76 cfs @ 12.09 hrs, Volume= 0.815 af, Atten= 0%, Lag= 0.0 min
Primary = 10.76 cfs @ 12.09 hrs, Volume= 0.815 af
Routed to Pond Offsite : Offsite 1

Routing by Stor-Ind method, Time Span= 5.00-20.00 hrs, dt= 0.03 hrs
Peak Elev= 27.35' @ 12.09 hrs

Device	Routing	Invert	Outlet Devices
#1	Primary	25.00'	**18.0" Round Culvert** L= 135.0' CPP, square edge headwall, Ke= 0.500 Inlet / Outlet Invert= 25.00' / 13.00' S= 0.0889 '/' Cc= 0.900 n= 0.013 Corrugated PE, smooth interior, Flow Area= 1.77 sf

Primary OutFlow Max=10.61 cfs @ 12.09 hrs HW=27.30' (Free Discharge)
1=Culvert (Inlet Controls 10.61 cfs @ 6.00 fps)

Summary for Pond Device 3: Device 3

Inflow Area = 0.990 ac, 74.75% Impervious, Inflow Depth > 7.18" for 100 yr event
Inflow = 8.03 cfs @ 12.08 hrs, Volume= 0.593 af
Outflow = 8.03 cfs @ 12.08 hrs, Volume= 0.593 af, Atten= 0%, Lag= 0.0 min
Primary = 8.03 cfs @ 12.08 hrs, Volume= 0.593 af
Routed to Pond Offsite : Offsite 1

Routing by Stor-Ind method, Time Span= 5.00-20.00 hrs, dt= 0.03 hrs
Peak Elev= 10.86' @ 12.08 hrs

Device	Routing	Invert	Outlet Devices
#1	Primary	9.00'	**18.0" Round Culvert** L= 50.0' CPP, square edge headwall, Ke= 0.500 Inlet / Outlet Invert= 9.00' / 8.70' S= 0.0060 '/' Cc= 0.900 n= 0.013 Corrugated PE, smooth interior, Flow Area= 1.77 sf

Primary OutFlow Max=7.97 cfs @ 12.08 hrs HW=10.84' (Free Discharge)
1=Culvert (Barrel Controls 7.97 cfs @ 4.68 fps)

Summary for Pond Offsite: Offsite 1

Inflow Area = 9.130 ac, 39.01% Impervious, Inflow Depth > 6.06" for 100 yr event
Inflow = 58.46 cfs @ 12.11 hrs, Volume= 4.613 af
Primary = 58.46 cfs @ 12.11 hrs, Volume= 4.613 af, Atten= 0%, Lag= 0.0 min

Routing by Stor-Ind method, Time Span= 5.00-20.00 hrs, dt= 0.03 hrs

Summary for Subcatchment Bio 1: Biobasin 1 DA

Runoff = 0.23 cfs @ 12.09 hrs, Volume= 0.015 af, Depth> 0.73"
Routed to Pond Biobasin 1 : Biobasin 1

Runoff by SCS TR-20 method, UH=SCS, Weighted-CN, Time Span= 5.00-20.00 hrs, dt= 0.03 hrs
Type III 24-hr WQv rainfall Rainfall=1.40"

Area (ac)	CN	Description
0.180	98	Unconnected roofs, HSG D
0.070	80	>75% Grass cover, Good, HSG D
0.250	93	Weighted Average
0.070		28.00% Pervious Area
0.180		72.00% Impervious Area
0.180		100.00% Unconnected

Tc (min)	Length (feet)	Slope (ft/ft)	Velocity (ft/sec)	Capacity (cfs)	Description
6.0					**Direct Entry, Direct**

Summary for Subcatchment Bio 2: Biobasin 2 DA

Runoff = 0.13 cfs @ 12.09 hrs, Volume= 0.009 af, Depth> 0.47"
Routed to Pond Biobasin 2 : Biobasin 2

Runoff by SCS TR-20 method, UH=SCS, Weighted-CN, Time Span= 5.00-20.00 hrs, dt= 0.03 hrs
Type III 24-hr WQv rainfall Rainfall=1.40"

Area (ac)	CN	Description
0.100	98	Unconnected roofs, HSG D
0.130	80	>75% Grass cover, Good, HSG D
0.230	88	Weighted Average
0.130		56.52% Pervious Area
0.100		43.48% Impervious Area
0.100		100.00% Unconnected

Tc (min)	Length (feet)	Slope (ft/ft)	Velocity (ft/sec)	Capacity (cfs)	Description
6.0					**Direct Entry,**

Summary for Subcatchment Bio 3: Biobasin 3 DA

Runoff = 0.62 cfs @ 12.09 hrs, Volume= 0.042 af, Depth> 0.86"
Routed to Pond Biobasin 3 : BioBasin 3

Runoff by SCS TR-20 method, UH=SCS, Weighted-CN, Time Span= 5.00-20.00 hrs, dt= 0.03 hrs
Type III 24-hr WQv rainfall Rainfall=1.40"

Area (ac)	CN	Description
0.455	98	Unconnected roofs, HSG D
0.029	96	Gravel surface, HSG D
0.100	80	>75% Grass cover, Good, HSG D
0.584	95	Weighted Average
0.129		22.09% Pervious Area
0.455		77.91% Impervious Area
0.455		100.00% Unconnected

Tc (min)	Length (feet)	Slope (ft/ft)	Velocity (ft/sec)	Capacity (cfs)	Description
6.0					**Direct Entry,**

Summary for Subcatchment BP 1: Bypass Swale 1 DA

Runoff = 0.00 cfs @ 15.46 hrs, Volume= 0.000 af, Depth> 0.01"
Routed to Reach BP Swale 1 : BP Swale 1

Runoff by SCS TR-20 method, UH=SCS, Weighted-CN, Time Span= 5.00-20.00 hrs, dt= 0.03 hrs
Type III 24-hr WQv rainfall Rainfall=1.40"

Area (ac)	CN	Description
0.278	77	Woods, Good, HSG D
0.092	30	Woods, Good, HSG A
0.370	65	Weighted Average
0.370		100.00% Pervious Area

Tc (min)	Length (feet)	Slope (ft/ft)	Velocity (ft/sec)	Capacity (cfs)	Description
7.9	100	0.2500	0.21		**Sheet Flow,** Woods: Light underbrush n= 0.400 P2= 3.17"
0.8	68	0.3300	1.44		**Shallow Concentrated Flow,** Forest w/Heavy Litter Kv= 2.5 fps
0.2	47	0.5000	4.95		**Shallow Concentrated Flow,** Short Grass Pasture Kv= 7.0 fps
8.9	215	Total			

Summary for Subcatchment BP 2: Bypass Swale 2 DA

Runoff = 0.00 cfs @ 14.83 hrs, Volume= 0.002 af, Depth> 0.02"
Routed to Reach BP Swale 2 : BP Swale 2

Runoff by SCS TR-20 method, UH=SCS, Weighted-CN, Time Span= 5.00-20.00 hrs, dt= 0.03 hrs
Type III 24-hr WQv rainfall Rainfall=1.40"

Area (ac)	CN	Description
0.650	77	Woods, Good, HSG D
0.167	30	Woods, Good, HSG A
0.817	67	Weighted Average
0.817		100.00% Pervious Area

Tc (min)	Length (feet)	Slope (ft/ft)	Velocity (ft/sec)	Capacity (cfs)	Description
7.0	100	0.3300	0.24		**Sheet Flow,** Woods: Light underbrush n= 0.400 P2= 3.17"
0.7	70	0.5000	1.77		**Shallow Concentrated Flow,** Forest w/Heavy Litter Kv= 2.5 fps
0.7	60	0.0400	1.40		**Shallow Concentrated Flow,** Short Grass Pasture Kv= 7.0 fps
8.4	230	Total			

Summary for Subcatchment BP 3: Bypass Area 3

Runoff = 0.08 cfs @ 12.40 hrs, Volume= 0.015 af, Depth> 0.08"
Routed to Reach BP Swale 3 : ByPass Swale 3

Runoff by SCS TR-20 method, UH=SCS, Weighted-CN, Time Span= 5.00-20.00 hrs, dt= 0.03 hrs
Type III 24-hr WQv rainfall Rainfall=1.40"

Area (ac)	CN	Adj	Description
0.170	30		Woods, Good, HSG A
1.970	77		Woods, Good, HSG D
0.030	98		Unconnected pavement, HSG C
2.170	74	73	Weighted Average, UI Adjusted
2.140			98.62% Pervious Area
0.030			1.38% Impervious Area
0.030			100.00% Unconnected

Tc (min)	Length (feet)	Slope (ft/ft)	Velocity (ft/sec)	Capacity (cfs)	Description
7.9	100	0.2500	0.21		**Sheet Flow,** Woods: Light underbrush n= 0.400 P2= 3.17"
0.9	150	0.3330	2.89		**Shallow Concentrated Flow,** Woodland Kv= 5.0 fps
8.8	250	Total			

Summary for Subcatchment D1: Device 1 DA

Runoff = 1.30 cfs @ 12.09 hrs, Volume= 0.087 af, Depth> 0.61"
Routed to Pond 1P : Device 1

Runoff by SCS TR-20 method, UH=SCS, Weighted-CN, Time Span= 5.00-20.00 hrs, dt= 0.03 hrs
Type III 24-hr WQv rainfall Rainfall=1.40"

Area (ac)	CN	Description
1.050	98	Unconnected roofs, HSG D
0.650	80	>75% Grass cover, Good, HSG D
1.700	91	Weighted Average
0.650		38.24% Pervious Area
1.050		61.76% Impervious Area
1.050		100.00% Unconnected

Tc (min)	Length (feet)	Slope (ft/ft)	Velocity (ft/sec)	Capacity (cfs)	Description
6.0					**Direct Entry,**

Summary for Subcatchment D2: Device 2 DA

Runoff = 0.59 cfs @ 12.09 hrs, Volume= 0.040 af, Depth> 0.56"
Routed to Pond Device 2 : Device 2

Runoff by SCS TR-20 method, UH=SCS, Weighted-CN, Time Span= 5.00-20.00 hrs, dt= 0.03 hrs
Type III 24-hr WQv rainfall Rainfall=1.40"

Area (ac)	CN	Description
0.460	98	Paved parking, HSG D
0.390	80	>75% Grass cover, Good, HSG D
0.850	90	Weighted Average
0.390		45.88% Pervious Area
0.460		54.12% Impervious Area

Tc (min)	Length (feet)	Slope (ft/ft)	Velocity (ft/sec)	Capacity (cfs)	Description
6.0					**Direct Entry,**

Summary for Subcatchment D3: Device 3 DA

Runoff = 0.90 cfs @ 12.09 hrs, Volume= 0.060 af, Depth> 0.73"
Routed to Pond Device 3 : Device 3

Runoff by SCS TR-20 method, UH=SCS, Weighted-CN, Time Span= 5.00-20.00 hrs, dt= 0.03 hrs
Type III 24-hr WQv rainfall Rainfall=1.40"

Area (ac)	CN	Description
0.740	98	Unconnected roofs, HSG D
0.250	80	>75% Grass cover, Good, HSG D
0.990	93	Weighted Average
0.250		25.25% Pervious Area
0.740		74.75% Impervious Area
0.740		100.00% Unconnected

Tc (min)	Length (feet)	Slope (ft/ft)	Velocity (ft/sec)	Capacity (cfs)	Description
6.0					**Direct Entry,**

Summary for Subcatchment D4: Device 4 DA

Runoff = 0.14 cfs @ 12.09 hrs, Volume= 0.009 af, Depth> 0.67"
Routed to Pond cb D4 : Device 4

Runoff by SCS TR-20 method, UH=SCS, Weighted-CN, Time Span= 5.00-20.00 hrs, dt= 0.03 hrs
Type III 24-hr WQv rainfall Rainfall=1.40"

Area (ac)	CN	Description
0.110	98	Paved parking, HSG C
0.060	80	>75% Grass cover, Good, HSG D
0.170	92	Weighted Average
0.060		35.29% Pervious Area
0.110		64.71% Impervious Area

Tc (min)	Length (feet)	Slope (ft/ft)	Velocity (ft/sec)	Capacity (cfs)	Description
6.0					**Direct Entry,**

Summary for Subcatchment DA1: DA 1

Runoff = 0.19 cfs @ 12.09 hrs, Volume= 0.013 af, Depth> 0.56"
Routed to Pond CB6 : CB 6

Runoff by SCS TR-20 method, UH=SCS, Weighted-CN, Time Span= 5.00-20.00 hrs, dt= 0.03 hrs
Type III 24-hr WQv rainfall Rainfall=1.40"

Area (ac)	CN	Description
0.146	98	Paved parking, HSG D
0.123	80	>75% Grass cover, Good, HSG D
0.269	90	Weighted Average
0.123		45.72% Pervious Area
0.146		54.28% Impervious Area

Tc (min)	Length (feet)	Slope (ft/ft)	Velocity (ft/sec)	Capacity (cfs)	Description
6.0	200		0.56		**Direct Entry,**

Summary for Subcatchment S2: Swale 2

Runoff = 0.32 cfs @ 12.09 hrs, Volume= 0.022 af, Depth> 0.94"
Routed to Reach Swale 2 : Veg Swale 2 Along Roadway/wall

Runoff by SCS TR-20 method, UH=SCS, Weighted-CN, Time Span= 5.00-20.00 hrs, dt= 0.03 hrs
Type III 24-hr WQv rainfall Rainfall=1.40"

	Area (ac)	CN	Description
*	0.243	98	
	0.037	80	>75% Grass cover, Good, HSG D
	0.280	96	Weighted Average
	0.037		13.21% Pervious Area
	0.243		86.79% Impervious Area

Tc (min)	Length (feet)	Slope (ft/ft)	Velocity (ft/sec)	Capacity (cfs)	Description
6.0					**Direct Entry,**

Summary for Subcatchment Swale 1: Swale 1 DA

Runoff = 0.13 cfs @ 12.11 hrs, Volume= 0.010 af, Depth> 0.26"
Routed to Reach V swale 1 : Veg Swale 1 Along Entrance RD

Runoff by SCS TR-20 method, UH=SCS, Weighted-CN, Time Span= 5.00-20.00 hrs, dt= 0.03 hrs
Type III 24-hr WQv rainfall Rainfall=1.40"

Area (ac)	CN	Description
0.402	80	>75% Grass cover, Good, HSG D
0.048	98	Paved parking, HSG D
0.450	82	Weighted Average
0.402		89.33% Pervious Area
0.048		10.67% Impervious Area

Tc (min)	Length (feet)	Slope (ft/ft)	Velocity (ft/sec)	Capacity (cfs)	Description
6.0					**Direct Entry,**

Summary for Reach 1R: Short Pipe 2

Inflow Area = 0.817 ac, 0.00% Impervious, Inflow Depth > 0.02" for WQv rainfall event
Inflow = 0.00 cfs @ 14.91 hrs, Volume= 0.002 af
Outflow = 0.00 cfs @ 14.92 hrs, Volume= 0.002 af, Atten= 0%, Lag= 0.5 min
Routed to Pond 16P : bypass pipe beneath Bio 1

Routing by Stor-Ind+Trans method, Time Span= 5.00-20.00 hrs, dt= 0.03 hrs
Max. Velocity= 1.45 fps, Min. Travel Time= 0.2 min
Avg. Velocity = 1.45 fps, Avg. Travel Time= 0.2 min

Peak Storage= 0 cf @ 14.92 hrs
Average Depth at Peak Storage= 0.01' , Surface Width= 0.27'
Bank-Full Depth= 1.50' Flow Area= 1.8 sf, Capacity= 28.77 cfs

18.0" Round Pipe
n= 0.013 Corrugated PE, smooth interior
Length= 20.0' Slope= 0.0750 '/'
Inlet Invert= 32.50', Outlet Invert= 31.00'

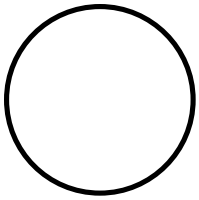

Summary for Reach 2R: Short pipe 1

Inflow Area = 0.370 ac, 0.00% Impervious, Inflow Depth > 0.01" for WQv rainfall event
Inflow = 0.00 cfs @ 15.53 hrs, Volume= 0.000 af
Outflow = 0.00 cfs @ 15.54 hrs, Volume= 0.000 af, Atten= 0%, Lag= 0.2 min
Routed to Pond 16P : bypass pipe beneath Bio 1

Routing by Stor-Ind+Trans method, Time Span= 5.00-20.00 hrs, dt= 0.03 hrs
Max. Velocity= 2.64 fps, Min. Travel Time= 0.1 min
Avg. Velocity = 2.64 fps, Avg. Travel Time= 0.1 min

Peak Storage= 0 cf @ 15.54 hrs
Average Depth at Peak Storage= 0.00' , Surface Width= 0.10'
Bank-Full Depth= 1.50' Flow Area= 1.8 sf, Capacity= 52.52 cfs

18.0" Round Pipe
n= 0.013 Corrugated PE, smooth interior
Length= 12.0' Slope= 0.2500 '/'
Inlet Invert= 35.00', Outlet Invert= 32.00'

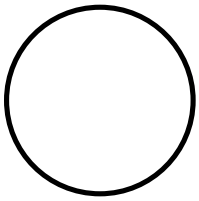

Summary for Reach BP Swale 1: BP Swale 1

Inflow Area = 0.370 ac, 0.00% Impervious, Inflow Depth > 0.01" for WQv rainfall event
Inflow = 0.00 cfs @ 15.46 hrs, Volume= 0.000 af
Outflow = 0.00 cfs @ 15.53 hrs, Volume= 0.000 af, Atten= 0%, Lag= 4.4 min
Routed to Reach 2R : Short pipe 1

Routing by Stor-Ind+Trans method, Time Span= 5.00-20.00 hrs, dt= 0.03 hrs
Max. Velocity= 0.88 fps, Min. Travel Time= 2.5 min
Avg. Velocity = 0.88 fps, Avg. Travel Time= 2.5 min

Peak Storage= 0 cf @ 15.49 hrs
Average Depth at Peak Storage= 0.00' , Surface Width= 1.00'
Bank-Full Depth= 2.00' Flow Area= 10.0 sf, Capacity= 123.96 cfs

1.00' x 2.00' deep channel, n= 0.035 High grass
Side Slope Z-value= 2.0 '/' Top Width= 9.00'
Length= 130.0' Slope= 0.0846 '/'
Inlet Invert= 46.00', Outlet Invert= 35.00'

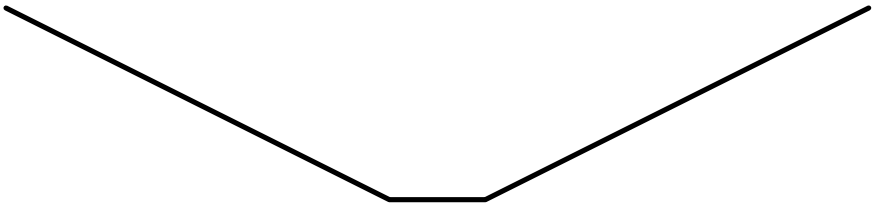

Summary for Reach BP Swale 2: BP Swale 2

Inflow Area = 0.817 ac, 0.00% Impervious, Inflow Depth > 0.02" for WQv rainfall event
Inflow = 0.00 cfs @ 14.83 hrs, Volume= 0.002 af
Outflow = 0.00 cfs @ 14.91 hrs, Volume= 0.002 af, Atten= 0%, Lag= 4.7 min
Routed to Reach 1R : Short Pipe 2

Routing by Stor-Ind+Trans method, Time Span= 5.00-20.00 hrs, dt= 0.03 hrs
Max. Velocity= 0.83 fps, Min. Travel Time= 2.8 min
Avg. Velocity = 0.83 fps, Avg. Travel Time= 2.8 min

Peak Storage= 1 cf @ 14.87 hrs
Average Depth at Peak Storage= 0.00' , Surface Width= 2.01'
Bank-Full Depth= 2.00' Flow Area= 12.0 sf, Capacity= 145.83 cfs

2.00' x 2.00' deep channel, n= 0.035 High grass
Side Slope Z-value= 2.0 '/' Top Width= 10.00'
Length= 138.0' Slope= 0.0725 '/'
Inlet Invert= 43.00', Outlet Invert= 33.00'



Summary for Reach BP Swale 3: ByPass Swale 3

Inflow Area = 2.170 ac, 1.38% Impervious, Inflow Depth > 0.08" for WQv rainfall event
Inflow = 0.08 cfs @ 12.40 hrs, Volume= 0.015 af
Outflow = 0.08 cfs @ 12.47 hrs, Volume= 0.015 af, Atten= 1%, Lag= 4.3 min
Routed to Pond 4P : DMH 1

Routing by Stor-Ind+Trans method, Time Span= 5.00-20.00 hrs, dt= 0.03 hrs
Max. Velocity= 0.93 fps, Min. Travel Time= 2.6 min
Avg. Velocity = 0.61 fps, Avg. Travel Time= 3.9 min

Peak Storage= 13 cf @ 12.42 hrs
Average Depth at Peak Storage= 0.04' , Surface Width= 2.17'
Bank-Full Depth= 2.00' Flow Area= 12.0 sf, Capacity= 100.60 cfs

2.00' x 2.00' deep channel, n= 0.035 Earth, dense weeds
Side Slope Z-value= 2.0 '/' Top Width= 10.00'
Length= 145.0' Slope= 0.0345 '/'
Inlet Invert= 39.00', Outlet Invert= 34.00'



Summary for Reach Swale 2: Veg Swale 2 Along Roadway/wall

Inflow Area = 0.280 ac, 86.79% Impervious, Inflow Depth > 0.94" for WQv rainfall event
Inflow = 0.32 cfs @ 12.09 hrs, Volume= 0.022 af
Outflow = 0.29 cfs @ 12.18 hrs, Volume= 0.022 af, Atten= 8%, Lag= 5.7 min
Routed to Pond CB6 : CB 6

Routing by Stor-Ind+Trans method, Time Span= 5.00-20.00 hrs, dt= 0.03 hrs
Max. Velocity= 1.20 fps, Min. Travel Time= 3.5 min
Avg. Velocity = 0.47 fps, Avg. Travel Time= 9.1 min

Peak Storage= 62 cf @ 12.12 hrs
Average Depth at Peak Storage= 0.11' , Surface Width= 2.63'
Bank-Full Depth= 2.00' Flow Area= 16.0 sf, Capacity= 100.69 cfs

2.00' x 2.00' deep channel, n= 0.035 High grass
Side Slope Z-value= 3.0 '/' Top Width= 14.00'
Length= 256.0' Slope= 0.0195 '/'
Inlet Invert= 36.00', Outlet Invert= 31.00'



Summary for Reach V swale 1: Veg Swale 1 Along Entrance RD

Inflow Area = 0.450 ac, 10.67% Impervious, Inflow Depth > 0.26" for WQv rainfall event
Inflow = 0.13 cfs @ 12.11 hrs, Volume= 0.010 af
Outflow = 0.12 cfs @ 12.17 hrs, Volume= 0.010 af, Atten= 5%, Lag= 3.7 min
Routed to Pond CB : CB

Routing by Stor-Ind+Trans method, Time Span= 5.00-20.00 hrs, dt= 0.03 hrs
Max. Velocity= 1.12 fps, Min. Travel Time= 2.1 min
Avg. Velocity = 0.63 fps, Avg. Travel Time= 3.7 min

Peak Storage= 15 cf @ 12.13 hrs
Average Depth at Peak Storage= 0.05' , Surface Width= 2.30'
Bank-Full Depth= 2.00' Flow Area= 16.0 sf, Capacity= 142.80 cfs

2.00' x 2.00' deep channel, n= 0.035 High grass
Side Slope Z-value= 3.0 '/' Top Width= 14.00'
Length= 140.0' Slope= 0.0393 '/'
Inlet Invert= 39.00', Outlet Invert= 33.50'

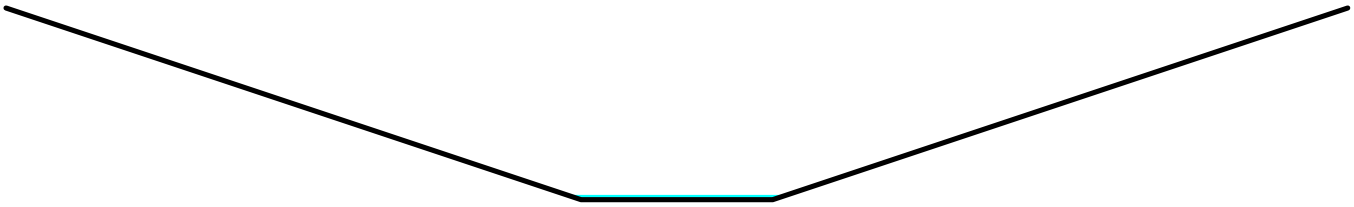

Summary for Pond 1P: Device 1

Inflow Area = 1.700 ac, 61.76% Impervious, Inflow Depth > 0.61" for WQv rainfall event
Inflow = 1.30 cfs @ 12.09 hrs, Volume= 0.087 af
Outflow = 1.30 cfs @ 12.09 hrs, Volume= 0.087 af, Atten= 0%, Lag= 0.0 min
Primary = 1.30 cfs @ 12.09 hrs, Volume= 0.087 af
Routed to Pond Offsite : Offsite 1

Routing by Stor-Ind method, Time Span= 5.00-20.00 hrs, dt= 0.03 hrs
Peak Elev= 4.51' @ 12.09 hrs

Device	Routing	Invert	Outlet Devices
#1	Primary	4.00'	**18.0" Round Culvert** L= 33.0' CPP, square edge headwall, Ke= 0.500 Inlet / Outlet Invert= 4.00' / 3.00' S= 0.0303 '/' Cc= 0.900 n= 0.013 Corrugated PE, smooth interior, Flow Area= 1.77 sf

Primary OutFlow Max=1.28 cfs @ 12.09 hrs HW=4.51' (Free Discharge)
1=Culvert (Inlet Controls 1.28 cfs @ 2.43 fps)

Summary for Pond 2P: BB1 Outlet Struct

Inflow Area = 1.437 ac, 12.53% Impervious, Inflow Depth > 0.03" for WQv rainfall event
Inflow = 0.01 cfs @ 17.53 hrs, Volume= 0.004 af
Outflow = 0.01 cfs @ 17.53 hrs, Volume= 0.004 af, Atten= 0%, Lag= 0.0 min
Primary = 0.01 cfs @ 17.53 hrs, Volume= 0.004 af
Routed to Pond CB 2 : Existing DMH to stream

Routing by Stor-Ind method, Time Span= 5.00-20.00 hrs, dt= 0.03 hrs

Peak Elev= 28.04' @ 17.53 hrs

Device	Routing	Invert	Outlet Devices
#1	Primary	28.00'	**30.0" Round Culvert** L= 145.0' CPP, square edge headwall, Ke= 0.500 Inlet / Outlet Invert= 28.00' / 26.40' S= 0.0110 '/' Cc= 0.900 n= 0.013 Corrugated PE, smooth interior, Flow Area= 4.91 sf

Primary OutFlow Max=0.01 cfs @ 17.53 hrs HW=28.04' (Free Discharge)
↑—**1=Culvert** (Barrel Controls 0.01 cfs @ 0.81 fps)

Summary for Pond 4P: DMH 1

Inflow Area = 2.170 ac, 1.38% Impervious, Inflow Depth > 0.08" for WQv rainfall event
Inflow = 0.08 cfs @ 12.47 hrs, Volume= 0.015 af
Outflow = 0.08 cfs @ 12.47 hrs, Volume= 0.015 af, Atten= 0%, Lag= 0.0 min
Primary = 0.08 cfs @ 12.47 hrs, Volume= 0.015 af
Routed to Pond Offsite : Offsite 1

Routing by Stor-Ind method, Time Span= 5.00-20.00 hrs, dt= 0.03 hrs
Peak Elev= 26.11' @ 12.47 hrs

Device	Routing	Invert	Outlet Devices
#1	Primary	26.00'	**24.0" Round Culvert** L= 37.0' CPP, square edge headwall, Ke= 0.500 Inlet / Outlet Invert= 26.00' / 24.00' S= 0.0541 '/' Cc= 0.900 n= 0.013 Corrugated PE, smooth interior, Flow Area= 3.14 sf

Primary OutFlow Max=0.08 cfs @ 12.47 hrs HW=26.11' (Free Discharge)
↑—**1=Culvert** (Inlet Controls 0.08 cfs @ 1.14 fps)

Summary for Pond 16P: bypass pipe beneath Bio 1

Inflow Area = 1.187 ac, 0.00% Impervious, Inflow Depth > 0.02" for WQv rainfall event
Inflow = 0.00 cfs @ 15.09 hrs, Volume= 0.002 af
Outflow = 0.00 cfs @ 15.09 hrs, Volume= 0.002 af, Atten= 0%, Lag= 0.0 min
Primary = 0.00 cfs @ 15.09 hrs, Volume= 0.002 af
Routed to Pond 2P : BB1 Outlet Struct

Routing by Stor-Ind method, Time Span= 5.00-20.00 hrs, dt= 0.03 hrs
Peak Elev= 29.53' @ 15.09 hrs

Device	Routing	Invert	Outlet Devices
#1	Primary	29.50'	**24.0" Round Culvert** L= 35.0' CPP, square edge headwall, Ke= 0.500 Inlet / Outlet Invert= 29.50' / 29.00' S= 0.0143 '/' Cc= 0.900 n= 0.013 Corrugated PE, smooth interior, Flow Area= 3.14 sf

Primary OutFlow Max=0.00 cfs @ 15.09 hrs HW=29.53' (Free Discharge)
↑—**1=Culvert** (Barrel Controls 0.00 cfs @ 0.74 fps)

Summary for Pond Biobasin 1: Biobasin 1

Inflow Area = 0.250 ac, 72.00% Impervious, Inflow Depth > 0.73" for WQv rainfall event
Inflow = 0.23 cfs @ 12.09 hrs, Volume= 0.015 af
Outflow = 0.01 cfs @ 17.71 hrs, Volume= 0.002 af, Atten= 98%, Lag= 337.4 min
Primary = 0.01 cfs @ 17.71 hrs, Volume= 0.002 af
Routed to Pond 2P : BB1 Outlet Struct

Routing by Stor-Ind method, Time Span= 5.00-20.00 hrs, dt= 0.03 hrs
Peak Elev= 34.03' @ 17.71 hrs Surf.Area= 1,158 sf Storage= 593 cf

Plug-Flow detention time= 431.0 min calculated for 0.002 af (11% of inflow)
Center-of-Mass det. time= 288.5 min (1,078.0 - 789.5)

Volume	Invert	Avail.Storage	Storage Description
#1	33.50'	4,147 cf	**Custom Stage Data (Prismatic)** Listed below (Recalc)

Elevation (feet)	Surf.Area (sq-ft)	Inc.Store (cubic-feet)	Cum.Store (cubic-feet)
33.50	1,114	0	0
34.00	1,138	563	563
35.00	1,915	1,527	2,090
36.00	2,200	2,058	4,147

Device	Routing	Invert	Outlet Devices
#1	Primary	28.00'	**30.0" Round Culvert** L= 140.0' CPP, square edge headwall, Ke= 0.500 Inlet / Outlet Invert= 28.00' / 27.00' S= 0.0071 '/' Cc= 0.900 n= 0.013 Corrugated PE, smooth interior, Flow Area= 4.91 sf
#2	Device 1	34.00'	**4.0" Vert. Orifice/Grate X 3.00** C= 0.600 Limited to weir flow at low heads
#3	Device 1	35.00'	**48.0" x 48.0" Horiz. Orifice/Grate** C= 0.600 Limited to weir flow at low heads

Primary OutFlow Max=0.01 cfs @ 17.71 hrs HW=34.03' (Free Discharge)
└**1=Culvert** (Passes 0.01 cfs of 50.12 cfs potential flow)
├**2=Orifice/Grate** (Orifice Controls 0.01 cfs @ 0.55 fps)
└**3=Orifice/Grate** (Controls 0.00 cfs)

Summary for Pond Biobasin 2: Biobasin 2

Inflow Area = 0.230 ac, 43.48% Impervious, Inflow Depth > 0.47" for WQv rainfall event
Inflow = 0.13 cfs @ 12.09 hrs, Volume= 0.009 af
Outflow = 0.00 cfs @ 5.00 hrs, Volume= 0.000 af, Atten= 100%, Lag= 0.0 min
Primary = 0.00 cfs @ 5.00 hrs, Volume= 0.000 af
Routed to Pond Offsite : Offsite 1

Routing by Stor-Ind method, Time Span= 5.00-20.00 hrs, dt= 0.03 hrs
Peak Elev= 30.44' @ 20.00 hrs Surf.Area= 1,028 sf Storage= 390 cf

Plug-Flow detention time= (not calculated: initial storage exceeds outflow)

Center-of-Mass det. time= (not calculated: no outflow)

Volume	Invert	Avail.Storage	Storage Description
#1	30.00'	2,737 cf	**Custom Stage Data (Prismatic)** Listed below (Recalc)

Elevation (feet)	Surf.Area (sq-ft)	Inc.Store (cubic-feet)	Cum.Store (cubic-feet)
30.00	765	0	0
32.00	1,972	2,737	2,737

Device	Routing	Invert	Outlet Devices
#1	Primary	27.00'	**15.0" Round Culvert** L= 80.0' CPP, square edge headwall, Ke= 0.500 Inlet / Outlet Invert= 27.00' / 26.00' S= 0.0125 '/' Cc= 0.900 n= 0.013 Corrugated PE, smooth interior, Flow Area= 1.23 sf
#2	Device 1	31.70'	**24.0" x 48.0" Horiz. Orifice/Grate** C= 0.600 Limited to weir flow at low heads
#3	Device 1	30.50'	**6.0" Vert. Orifice/Grate** C= 0.600 Limited to weir flow at low heads

Primary OutFlow Max=0.00 cfs @ 5.00 hrs HW=30.00' (Free Discharge)
└─**1=Culvert** (Passes 0.00 cfs of 8.90 cfs potential flow)
  ├─**2=Orifice/Grate** (Controls 0.00 cfs)
  └─**3=Orifice/Grate** (Controls 0.00 cfs)

Summary for Pond Biobasin 3: BioBasin 3

Inflow Area = 0.584 ac, 77.91% Impervious, Inflow Depth > 0.86" for WQv rainfall event
Inflow = 0.62 cfs @ 12.09 hrs, Volume= 0.042 af
Outflow = 0.49 cfs @ 12.15 hrs, Volume= 0.030 af, Atten= 22%, Lag= 4.0 min
Primary = 0.49 cfs @ 12.15 hrs, Volume= 0.030 af
Routed to Pond Offsite : Offsite 1

Routing by Stor-Ind method, Time Span= 5.00-20.00 hrs, dt= 0.03 hrs
Peak Elev= 21.13' @ 12.15 hrs Surf.Area= 1,119 sf Storage= 649 cf

Plug-Flow detention time= 111.1 min calculated for 0.030 af (72% of inflow)
Center-of-Mass det. time= 47.9 min (825.0 - 777.1)

Volume	Invert	Avail.Storage	Storage Description
#1	20.50'	3,487 cf	**Custom Stage Data (Prismatic)** Listed below (Recalc)

Elevation (feet)	Surf.Area (sq-ft)	Inc.Store (cubic-feet)	Cum.Store (cubic-feet)
20.50	960	0	0
21.00	1,064	506	506
22.00	1,482	1,273	1,779
23.00	1,934	1,708	3,487

Device	Routing	Invert	Outlet Devices
#1	Primary	17.00'	**15.0" Round Culvert** L= 38.0' CPP, square edge headwall, Ke= 0.500 Inlet / Outlet Invert= 17.00' / 11.00' S= 0.1579 '/' Cc= 0.900 n= 0.013 Corrugated PE, smooth interior, Flow Area= 1.23 sf
#2	Device 1	21.00'	**6.0" Horiz. Orifice/Grate X 2.00** C= 0.600 Limited to weir flow at low heads
#3	Device 1	22.00'	**24.0" x 48.0" Horiz. Orifice/Grate** C= 0.600 Limited to weir flow at low heads
#4	Primary	22.20'	**8.0' long x 12.0' breadth Broad-Crested Rectangular Weir** Head (feet) 0.20 0.40 0.60 0.80 1.00 1.20 1.40 1.60 Coef. (English) 2.57 2.62 2.70 2.67 2.66 2.67 2.66 2.64

Primary OutFlow Max=0.48 cfs @ 12.15 hrs HW=21.13' (Free Discharge)
└**1=Culvert** (Passes 0.48 cfs of 11.06 cfs potential flow)
  └**2=Orifice/Grate** (Weir Controls 0.48 cfs @ 1.18 fps)
  └**3=Orifice/Grate** (Controls 0.00 cfs)
└**4=Broad-Crested Rectangular Weir** (Controls 0.00 cfs)

Summary for Pond CB: CB

Inflow Area = 0.450 ac, 10.67% Impervious, Inflow Depth > 0.26" for WQv rainfall event
Inflow = 0.12 cfs @ 12.17 hrs, Volume= 0.010 af
Outflow = 0.12 cfs @ 12.17 hrs, Volume= 0.010 af, Atten= 0%, Lag= 0.0 min
Primary = 0.12 cfs @ 12.17 hrs, Volume= 0.010 af
Routed to Pond CB 2 : Existing DMH to stream

Routing by Stor-Ind method, Time Span= 5.00-20.00 hrs, dt= 0.03 hrs
Peak Elev= 33.65' @ 12.17 hrs

Device	Routing	Invert	Outlet Devices
#1	Primary	33.50'	**18.0" Round Culvert** L= 5.0' CPP, square edge headwall, Ke= 0.500 Inlet / Outlet Invert= 33.50' / 30.00' S= 0.7000 '/' Cc= 0.900 n= 0.013 Corrugated PE, smooth interior, Flow Area= 1.77 sf

Primary OutFlow Max=0.12 cfs @ 12.17 hrs HW=33.65' (Free Discharge)
└**1=Culvert** (Inlet Controls 0.12 cfs @ 1.32 fps)

Summary for Pond CB 2: Existing DMH to stream

Inflow Area = 1.887 ac, 12.08% Impervious, Inflow Depth > 0.08" for WQv rainfall event
Inflow = 0.12 cfs @ 12.17 hrs, Volume= 0.013 af
Outflow = 0.12 cfs @ 12.17 hrs, Volume= 0.013 af, Atten= 0%, Lag= 0.0 min
Primary = 0.12 cfs @ 12.17 hrs, Volume= 0.013 af
Routed to Pond Offsite : Offsite 1

Routing by Stor-Ind method, Time Span= 5.00-20.00 hrs, dt= 0.03 hrs
Peak Elev= 26.13' @ 12.17 hrs

Device	Routing	Invert	Outlet Devices
#1	Primary	26.00'	**30.0" Round Culvert** L= 45.0' CPP, square edge headwall, Ke= 0.500 Inlet / Outlet Invert= 26.00' / 25.50' S= 0.0111 '/' Cc= 0.900 n= 0.013 Corrugated PE, smooth interior, Flow Area= 4.91 sf

Primary OutFlow Max=0.12 cfs @ 12.17 hrs HW=26.13' (Free Discharge)
1=Culvert (Barrel Controls 0.12 cfs @ 1.85 fps)

Summary for Pond cb D4: Device 4

Inflow Area = 0.170 ac, 64.71% Impervious, Inflow Depth > 0.67" for WQv rainfall event
Inflow = 0.14 cfs @ 12.09 hrs, Volume= 0.009 af
Outflow = 0.14 cfs @ 12.09 hrs, Volume= 0.009 af, Atten= 0%, Lag= 0.0 min
Primary = 0.14 cfs @ 12.09 hrs, Volume= 0.009 af
Routed to Pond Offsite : Offsite 1

Routing by Stor-Ind method, Time Span= 5.00-20.00 hrs, dt= 0.03 hrs
Peak Elev= 9.18' @ 12.09 hrs

Device	Routing	Invert	Outlet Devices
#1	Primary	9.00'	**12.0" Round Culvert** L= 33.0' CPP, square edge headwall, Ke= 0.500 Inlet / Outlet Invert= 9.00' / 8.00' S= 0.0303 '/' Cc= 0.900 n= 0.013 Corrugated PE, smooth interior, Flow Area= 0.79 sf

Primary OutFlow Max=0.14 cfs @ 12.09 hrs HW=9.18' (Free Discharge)
1=Culvert (Inlet Controls 0.14 cfs @ 1.45 fps)

Summary for Pond CB6: CB 6

Inflow Area = 0.549 ac, 70.86% Impervious, Inflow Depth > 0.75" for WQv rainfall event
Inflow = 0.43 cfs @ 12.16 hrs, Volume= 0.034 af
Outflow = 0.43 cfs @ 12.16 hrs, Volume= 0.034 af, Atten= 0%, Lag= 0.0 min
Primary = 0.43 cfs @ 12.16 hrs, Volume= 0.034 af
Routed to Pond Device 2 : Device 2

Routing by Stor-Ind method, Time Span= 5.00-20.00 hrs, dt= 0.03 hrs
Peak Elev= 26.83' @ 12.16 hrs

Device	Routing	Invert	Outlet Devices
#1	Primary	26.50'	**12.0" Round Culvert** L= 65.0' CPP, square edge headwall, Ke= 0.500 Inlet / Outlet Invert= 26.50' / 24.70' S= 0.0277 '/' Cc= 0.900 n= 0.013 Corrugated PE, smooth interior, Flow Area= 0.79 sf

Primary OutFlow Max=0.43 cfs @ 12.16 hrs HW=26.82' (Free Discharge)
1=Culvert (Inlet Controls 0.43 cfs @ 1.94 fps)

Summary for Pond Device 2: Device 2

Inflow Area = 1.399 ac, 60.69% Impervious, Inflow Depth > 0.64" for WQv rainfall event
Inflow = 0.98 cfs @ 12.11 hrs, Volume= 0.074 af
Outflow = 0.98 cfs @ 12.11 hrs, Volume= 0.074 af, Atten= 0%, Lag= 0.0 min
Primary = 0.98 cfs @ 12.11 hrs, Volume= 0.074 af
Routed to Pond Offsite : Offsite 1

Routing by Stor-Ind method, Time Span= 5.00-20.00 hrs, dt= 0.03 hrs
Peak Elev= 25.44' @ 12.11 hrs

Device	Routing	Invert	Outlet Devices
#1	Primary	25.00'	**18.0" Round Culvert** L= 135.0' CPP, square edge headwall, Ke= 0.500 Inlet / Outlet Invert= 25.00' / 13.00' S= 0.0889 '/' Cc= 0.900 n= 0.013 Corrugated PE, smooth interior, Flow Area= 1.77 sf

Primary OutFlow Max=0.98 cfs @ 12.11 hrs HW=25.44' (Free Discharge)
1=Culvert (Inlet Controls 0.98 cfs @ 2.26 fps)

Summary for Pond Device 3: Device 3

Inflow Area = 0.990 ac, 74.75% Impervious, Inflow Depth > 0.73" for WQv rainfall event
Inflow = 0.90 cfs @ 12.09 hrs, Volume= 0.060 af
Outflow = 0.90 cfs @ 12.09 hrs, Volume= 0.060 af, Atten= 0%, Lag= 0.0 min
Primary = 0.90 cfs @ 12.09 hrs, Volume= 0.060 af
Routed to Pond Offsite : Offsite 1

Routing by Stor-Ind method, Time Span= 5.00-20.00 hrs, dt= 0.03 hrs
Peak Elev= 9.48' @ 12.09 hrs

Device	Routing	Invert	Outlet Devices
#1	Primary	9.00'	**18.0" Round Culvert** L= 50.0' CPP, square edge headwall, Ke= 0.500 Inlet / Outlet Invert= 9.00' / 8.70' S= 0.0060 '/' Cc= 0.900 n= 0.013 Corrugated PE, smooth interior, Flow Area= 1.77 sf

Primary OutFlow Max=0.89 cfs @ 12.09 hrs HW=9.47' (Free Discharge)
1=Culvert (Barrel Controls 0.89 cfs @ 2.78 fps)

Summary for Pond Offsite: Offsite 1

Inflow Area = 9.130 ac, 39.01% Impervious, Inflow Depth > 0.38" for WQv rainfall event
Inflow = 3.79 cfs @ 12.11 hrs, Volume= 0.289 af
Primary = 3.79 cfs @ 12.11 hrs, Volume= 0.289 af, Atten= 0%, Lag= 0.0 min

Routing by Stor-Ind method, Time Span= 5.00-20.00 hrs, dt= 0.03 hrs

Appendix H

ADS BARRACUDA PRODUCT INFORMATION

ADS® Barracuda™ Max

The Barracuda Max is market-changing stormwater quality technology. This high-performance vortex hydrodynamic separator is designed to remove total suspended solids in order to protect our precious receiving waters. The Barracuda Max is also an outstanding value that offers multiple pipe configurations, and quick installation. The "Max" version of the Barracuda is built on the base platform of the original ADS Barracuda with improved removal efficiencies and installation components.

Features

- Single manhole design
- No elevation loss between the inlet and outlet
- Variable inlet/outlet angle configurations (not just 180 degree orientation)
- Internal bypass for inline installation (where applicable)
- Revolutionary, patent-pending "teeth" mitigate turbulence in the sump area to prevent re-suspension of captured contaminants and an added deflector plate and bowl extension enhance the unit's removal capabilities

Benefits

- Internal components are in stock for quick delivery
- The S3, S4, S6, and S8 can be installed in a standard 36" (900 mm), 48" (1200 m), 72" (1800 m), and 96" (2400 m) precast manhole, respectively
- The S3 & S4 can be provided factory installed within a 36" (900 mm) and 48" (1200 mm) ADS HP manhole and delivered to the jobsite
- The Barracuda Max "teeth" and deflector plate apparatus are fabricated and designed for quick and easy field assembly
- Designed for easy maintenance using a vacuum truck or similar equipment.
- Inspection and maintenance are performed from the surface with no confined space entry

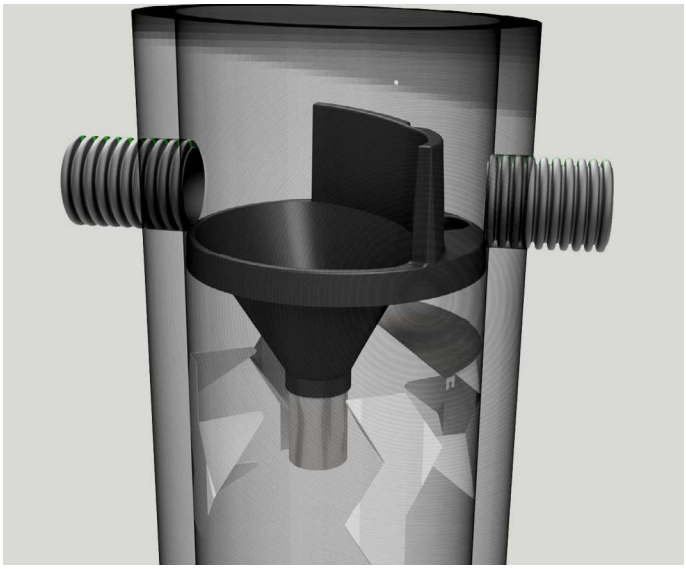



Barrucuda Specification

Materials and Design

- Concrete Structures: Designed for H-20 traffic loading and applicable soil loads or as otherwise determined by a Licensed Professional Engineer. The materials and structural design of the devices shall be per ASTM C857 and ASTM C858.
- 36” (900 mm) and 48” (1200 mm) HP Manhole Structures: Made from an impact modified copolymer polypropylene meeting the material requirements of ASTM F2764. The eccentric cone reducer shall be manufactured from polyethylene material meeting ASTM D3350 cell class 213320C. Gaskets shall be made of material meeting the requirements of ASTM F477.
- Separator internals shall be substantially constructed of stainless steel, polyethylene or other thermoplastic material approved by the manufacturer.

Performance

- The stormwater treatment unit shall be an inline unit capable of conveying 100% of the design peak flow. If peak flow rates exceed maximum hydraulic rate, the unit shall be installed offline.
- The Barracuda Max unit shall be designed to remove at least 80% of the suspended solids on an annual aggregate removal basis. Said removal shall be based on full-scale third party testing using OK-110 media gradation or equivalent and 300 mg/L influent concentration. Said full scale testing shall have included sediment capture based on actual total mass collected by the stormwater treatment unit.

  - OR -

  The Barracuda Max unit shall be designed to remove at least 50% of TSS using a media mix with d_{50}=75 micron and 200 mg/L influent concentration.

  - OR -

  The Barracuda Max unit shall be designed to remove at least 50% of TSS per current NJDEP/NJCAT HDS protocol.
- The stormwater treatment unit internals shall consist of (1) separator cone assembly, and (1) sump assembly, which includes the “teeth”.

Barracuda Max Model	Manhole Diameter	NJDEP (50% removal)	OK-110 (80% removal)
S3	36” (900 mm)	0.85 CFS (24.1 L/s)	0.86 CFS (24.1 L/s)
S4	48” (1200 mm)	1.52 CFS (43.0 L/s)	1.52 CFS (43.0 L/s)
S6	72” (1800 mm)	3.40 CFS (96.3 L/s)	3.42 CFS (96.8 L/s)
S8	96” (2400 mm)	6.08 CFS (172.2 L/s)	6.08 CFS (172.2 L/s)

* Peak bypass flows are dependent on final design

Installation

Installation of the stormwater treatment unit(s) shall be performed per manufacturer’s installation instructions. Such instructions can be obtained by calling Advanced Drainage Systems at 800-821-6710 or by logging on to www.adspipe.com.

ADS “Terms and Conditions of Sale” are available on the website, www.ads-pipe.com . The ADS logo, Barracuda logo, and the Green Stripe are registered trademarks of Advanced Drainage Systems, Inc.
© 2021 Advanced Drainage Systems, Inc. #11051 7/21 CS

adspipe.com
800-821-6710

Appendix I

STREAM STATS OUTPUT

StreamStats Report

Region ID: NY
Workspace ID: NY20240426184451602000
Clicked Point (Latitude, Longitude): 41.45995, -74.02616
Time: 2024-04-26 14:45:14 -0400

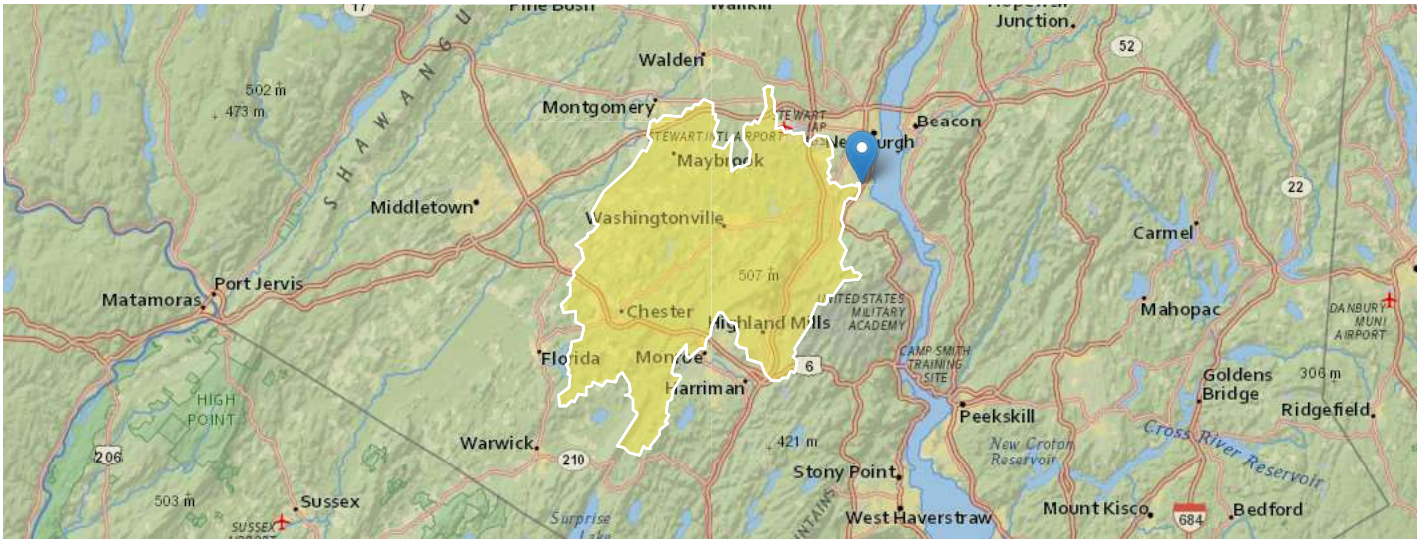

Collapse All

Basin Characteristics

Parameter Code	Parameter Description	Value	Unit
BSLOPCM	Mean basin slope determined by summing lengths of all contours in basin mulitplying by contour interval and dividing product by drainage area	537	feet per mi
CENTROIDX	Basin centroid horizontal (x) location in state plane coordinates	567952.4	meters
CENTROIDY	Basin centroid vertical (y) location in state plane units	4583862.2	meters
CONTOUR	Total length of all elevation contours in drainage area in miles	911.89	miles
CSL1085LO	10-85 slope of lower half of main channel in feet per mile.	17.4	feet per mi
CSL1085UP	10-85 slope of upper half of main channel in feet per mile.	10.7	feet per mi
CSL10_85	Change in elevation divided by length between points 10 and 85 percent of distance along main channel to basin divide - main channel method not known	10.7	feet per mi
DRNAREA	Area that drains to a point on a stream	170	square miles
EL1200	Percentage of basin at or above 1200 ft elevation	2.84	percent
FOREST	Percentage of area covered by forest	61.2	percent
JULAVPRE	Mean July Precipitation	4.35	inches
JUNAVPRE	Mean June Precipitation	4.27	inches
JUNMAXTMP	Maximum June Temperature, in degrees F	78.8	degrees F
LAGFACTOR	Lag Factor as defined in SIR 2006-5112	2.63	dimensionless
LC11DEV	Percentage of developed (urban) land from NLCD 2011 classes 21-24	18.9	percent
LC11IMP	Average percentage of impervious area determined from NLCD 2011 impervious dataset	4.24	percent
LENGTH	Length along the main channel from the measuring location extended to the basin divide	38.8	miles
MAR	Mean annual runoff for the period of record in inches	22.2	inches
MAYAVPRE	Mean May Precipitation	4.62	inches
MXSNO	50th percentile of seasonal maximum snow depth from Northeast Regional Climate Center atlas by Cember and Wilks, 1993	11.6	inches

Parameter Code	Parameter Description	Value	Unit
OUTLETX	Basin outlet horizontal (x) location in state plane coordinates	581335	feet
OUTLETY	Basin outlet vertical (y) location in state plane coordinates	4590275	feet
PRECIP	Mean Annual Precipitation	43.9	inches
PRJUNAUG00	Basin average mean precip for June to August from PRISM 1971-2000	12.7	inches
SLOPERATIO	Ratio of main channel slope to basin slope as defined in SIR 2006-5112	0.0199	dimensionless

Peak-Flow Statistics

Peak-Flow Statistics Parameters [2006 Full Region 2]

Parameter Code	Parameter Name	Value	Units	Min Limit	Max Limit
DRNAREA	Drainage Area	170	square miles	1.93	996
LAGFACTOR	Lag Factor	2.63	dimensionless	0.014	6.997
STORAGE	Percent Storage	4.2	percent	0	11.88
MAR	Mean Annual Runoff in inches	22.2	inches	16.03	33.95

Peak-Flow Statistics Flow Report [2006 Full Region 2]

PIL: Lower 90% Prediction Interval, PIU: Upper 90% Prediction Interval, ASEp: Average Standard Error of Prediction, SE: Standard Error (other -- see report)

Statistic	Value	Unit	SE	ASEp	Equiv. Yrs.
80-percent AEP flood	2130	ft^3/s	25.5	25.5	4.8
66.7-percent AEP flood	2550	ft^3/s	25.6	25.6	4.3
50-percent AEP flood	3130	ft^3/s	25.8	25.8	4.4
20-percent AEP flood	4830	ft^3/s	27	27	7.3
10-percent AEP flood	6200	ft^3/s	28.2	28.2	10.1
4-percent AEP flood	8200	ft^3/s	29.9	29.9	13.6
2-percent AEP flood	9870	ft^3/s	31.5	31.5	15.8
1-percent AEP flood	11700	ft^3/s	33.3	33.3	17.6
0.5-percent AEP flood	13800	ft^3/s	35.3	35.3	18.9
0.2-percent AEP flood	16900	ft^3/s	38.4	38.4	20.1

Peak-Flow Statistics Citations

Lumia, Richard, Freehafer, D.A., and Smith, M.J.,2006, Magnitude and Frequency of Floods in New York: U.S. Geological Survey Scientific Investigations Report 2006–5112, 152 p. (http://pubs.usgs.gov/sir/2006/5112/)

Flow-Duration Statistics

Flow-Duration Statistics Parameters [Statewide duration flows excl LongIsl 2014 5220]

Parameter Code	Parameter Name	Value	Units	Min Limit	Max Limit
DRNAREA	Drainage Area	170	square miles	3.14	4780
JUNAVPRE	Mean June Precipitation	4.27	inches	3.59	5.33
CENTROIDX	CENTROIDX	567952.4	meters	166000	658000

Parameter Code	Parameter Name	Value	Units	Min Limit	Max Limit
CENTROIDY	CENTROIDY	4583862.2	meters	4560000	4920000
CSL1085LO	10-85 slope of lower half of main channel	17.4	feet per mi	1.56	152
LENGTH	Main Channel Length	38.8	miles	0.88	305
MAR	Mean Annual Runoff in inches	22.2	inches	11.6	37.4
SSURGOB	SSURGO Percent Hydrologic Soil Type B	2.97	percent	1.14	65.7
JULAVPRE	Mean July Precipitation	4.35	inches	3.2	5.26
MAYAVPRE	Mean May Precipitation	4.62	inches	3.15	5.68
PRJUNAUG00	Basin average mean precip for June to August	12.7	inches	10.5	15.5
JUNMAXTMP	Maximum June Temperature	78.8	degrees F	68.8	78.8
SSURGOA	SSURGO Percent Hydrologic Soil Type A	3.92	percent	0.62	51.2
EL1200	Percentage of Basin Above 1200 ft	2.84	percent	0	100

Flow-Duration Statistics Flow Report [Statewide duration flows excl LongIsl 2014 5220]

PIL: Lower 90% Prediction Interval, PIU: Upper 90% Prediction Interval, ASEp: Average Standard Error of Prediction, SE: Standard Error (other -- see report)

Statistic	Value	Unit	ASEp
0.01 Percent Duration	12400	ft^3/s	23
1 Percent Duration	1970	ft^3/s	14
5 Percent Duration	943	ft^3/s	8.8
10 Percent Duration	641	ft^3/s	7.3
15 Percent Duration	492	ft^3/s	6.6
20 Percent Duration	402	ft^3/s	7
25 Percent Duration	329	ft^3/s	7.2
35 Percent Duration	234	ft^3/s	8.7
50 Percent Duration	141	ft^3/s	11

Bankfull Statistics

Bankfull Statistics Parameters [Bankfull Region 3 SIR2009 5144]

Parameter Code	Parameter Name	Value	Units	Min Limit	Max Limit
DRNAREA	Drainage Area	170	square miles	0.42	329

Bankfull Statistics Parameters [Appalachian Highlands D Bieger 2015]

Parameter Code	Parameter Name	Value	Units	Min Limit	Max Limit
DRNAREA	Drainage Area	170	square miles	0.07722	940.1535

Bankfull Statistics Parameters [46.0 Percent (78.3 square miles) New England P Bieger 2015]

Parameter Code	Parameter Name	Value	Units	Min Limit	Max Limit
DRNAREA	Drainage Area	170	square miles	3.799224	138.999861

Bankfull Statistics Parameters [54.0 Percent (91.7 square miles) Valley and Ridge P Bieger 2015]

Parameter Code	Parameter Name	Value	Units	Min Limit	Max Limit
DRNAREA	Drainage Area	170	square miles	0.100386	395.999604

Bankfull Statistics Parameters [USA Bieger 2015]

Parameter Code	Parameter Name	Value	Units	Min Limit	Max Limit
DRNAREA	Drainage Area	170	square miles	0.07722	59927.7393

Bankfull Statistics Flow Report [Bankfull Region 3 SIR2009 5144]

PIL: Lower 90% Prediction Interval, PIU: Upper 90% Prediction Interval, ASEp: Average Standard Error of Prediction, SE: Standard Error (other -- see report)

Statistic	Value	Unit	PIL	PIU
Bankfull Area	527	ft^2	165	1690
Bankfull Depth	4.88	ft	1.58	15.1
Bankfull Streamflow	2740	ft^3/s	351	21400
Bankfull Width	108	ft	34.5	338

Bankfull Statistics Flow Report [Appalachian Highlands D Bieger 2015]

Maximum Probable Flood Statistics

Maximum Probable Flood Statistics Parameters [Crippen Bue Region 4]

Parameter Code	Parameter Name	Value	Units	Min Limit	Max Limit
DRNAREA	Drainage Area	170	square miles	0.1	10000

Maximum Probable Flood Statistics Flow Report [Crippen Bue Region 4]

Statistic	Value	Unit
Maximum Flood Crippen Bue Regional	113000	ft^3/s

Maximum Probable Flood Statistics Citations

Crippen, J.R. and Bue, Conrad D.1977, Maximum Floodflows in the Conterminous United States, Geological Survey Water-Supply Paper 1887, 52p. (https://pubs.usgs.gov/wsp/1887/report.pdf)

USGS Data Disclaimer: Unless otherwise stated, all data, metadata and related materials are considered to satisfy the quality standards relative to the purpose for which the data were collected. Although these data and associated metadata have been reviewed for accuracy and completeness and approved for release by the U.S. Geological Survey (USGS), no warranty expressed or implied is made regarding the display or utility of the data for other purposes, nor on all computer systems, nor shall the act of distribution constitute any such warranty.

USGS Software Disclaimer: This software has been approved for release by the U.S. Geological Survey (USGS). Although the software has been subjected to rigorous review, the USGS reserves the right to update the software as needed pursuant to further analysis and review. No warranty, expressed or implied, is made by the USGS or the U.S. Government as to the functionality of the software and related material nor shall the fact of release constitute any such warranty. Furthermore, the software is released on condition that neither the USGS nor the U.S. Government shall be held liable for any damages resulting from its authorized or unauthorized use.

USGS Product Names Disclaimer: Any use of trade, firm, or product names is for descriptive purposes only and does not imply endorsement by the U.S. Government.

Application Version: 4.20.0
StreamStats Services Version: 1.2.22
NSS Services Version: 2.2.1

Appendix J

BIO-RETENTION AND SWALE O&M INSPECTION CHECKLIST

NEW YORK STATE OF OPPORTUNITY | Department of Environmental Conservation

Bioretention Stormwater Management Practices Level 1 Inspection Checklist

SMP ID #		**SMP Owner**		☐ Private ☐ Public
SMP Location (Address; Latitude & Longitude)				
	Latitude		**Longitude**	

Party Responsible for Maintenance	**System Type**		**Type of Site**
☐ Same as SMP Owner ☐ Other _____	☐ Seasonal ☐ Continuous Use ☐ Other	☐ Above Ground ☐ Below Ground	☐ Commercial ☐ Industrial ☐ Residential ☐ State

Inspection Date		**Inspection Time**	
Inspector			
Date of Last Inspection			

BR Drainage Area

Look for areas that are uphill from the Bioretention cell.

Problem (Check if Present)	**Follow-Up Actions**
 ☐ Bare soil, erosion of the ground (rills washing out the dirt)	☐ Seed and mulch areas of bare soil to establish vegetation. ☐ Fill in erosion areas with soil, compact, and seed and straw to establish vegetation. ☐ If a rill or small channel is forming, try to redirect water flowing to this area by creating a small berm or adding topsoil to areas that are heavily compacted. ☐ Other:

BR Drainage Area

Look for areas that are uphill from the Bioretention cell.

Problem (Check if Present)	Follow-Up Actions
	☐ Kick-Out to Level 2 Inspection: Large areas of soil have been eroded, or larger channels are forming. May require rerouting of flow paths.
 ☐ Piles of grass clippings, mulch, dirt, salt, or other materials	☐ Remove or cover piles of grass clippings, mulch, dirt, etc. ☐ Other:
 ☐ Open containers of oil, grease, paint, or other substances	☐ Cover or properly dispose of materials; consult your local solid waste authority for guidance on materials that may be toxic or hazardous. ☐ Other:

BR Inlets

Stand in the Bioretention cell itself and look for all the places where water flows in. Often there will be multiple points of inflow to the practice.

Problem (Check if Present)	Follow-Up Actions
 ☐ Inlets collect grit and debris or grass/weeds. Some water may not be getting into the Bioretention cell. The objective is to have a clear pathway for water to flow into the cell.	☐ Use a flat shovel to remove grit and debris (especially at curb inlets or openings). Parking lots generate fine grit that will accumulate at these spots. ☐ Pull out clumps of growing grass or weeds and scoop out the soil or grit that the plants are growing in. ☐ Remove any grass clippings, leaves, sticks, and other debris that is collecting at inlets. ☐ For pipes and ditches, remove sediment and debris that is partially blocking the pipe or ditch opening where it enters the Bioretention cell. ☐ Dispose of all material properly where it will not re-enter the Bioretention cell. ☐ Other: ☐ Kick-Out to Level 2 Inspection: Inlets are blocked to the extent that most of the water does not seem to be entering the Bioretention cell.
 ☐ Some or all of the inlets are eroding so that rills, gullies, and other erosion is present, or there is bare dirt that is washing into the Bioretention cell.	☐ For small areas of erosion, smooth out the eroded part and apply rock or stone (e.g., river cobble) to prevent further erosion. Usually, filter fabric is placed under the rock or stone. ☐ In some cases, reseeding and applying erosion-control matting can be used to prevent further erosion. Some of these materials may be available at a garden center, but it may be best to consult a landscape contractor. ☐ Other: ☐ Kick-Out to Level 2 Inspection: Erosion is occurring at most of the inlets, and it looks like there is too much water that is concentrating at these points. The inlet design may have to be modified.

BR Ponding Area

Examine the entire Bioretention surface and side slopes

Problem (Check if Present)	Follow-Up Actions
 ☐ Mulch (if used) needs to be replaced or replenished. The mulch layer had decomposed or is less than 1-inch thick.	☐ Add new mulch to a total depth (including any existing mulch that is left) of 2 to 3 inches. The mulch should be shredded hardwood mulch that is less likely to float away during rainstorms. ☐ Avoid adding too much mulch so that inlets are obstructed or certain areas become higher than the rest of the Bioretention surface. ☐ Other:
 ☐ Minor areas of sediment, grit, trash, or other debris are accumulating on the bottom.	☐ Use a shovel to scoop out minor areas of sediment or grit, especially in the spring after winter sanding materials may wash in and accumulate. Dispose of the material where it cannot re-enter the Bioretention cell . ☐ If removing the material creates a hole or low area, fill with soil mix that matches original mix and cover with mulch so that the Bioretention surface area is as flat as possible. ☐ Remove trash, vegetative debris, and other undesirable materials. ☐ Other:
	☐ Kick-Out to Level 2 Inspection: Sediment has accumulated more than 2-inches deep and covers 25% or more of the Bioretention surface. ☐ Kick-Out to Level 2 Inspection: The Bioretention cell is too densely vegetated to assess sediment accumulation or ponding; see BR-4, Vegetation.

BR Ponding Area

Examine the entire Bioretention surface and side slopes

Problem (Check if Present)	Follow-Up Actions
 ☐ There is erosion in the bottom or on the side slopes. Water seems to be carving out rills as it flows across the Bioretention surface or on the slopes, or sinkholes are forming in certain areas. ☐ Source: Stormwater Maintenance, LLC.	☐ Try filling the eroded areas with clean topsoil or sand, and cover with mulch. ☐ If the problem recurs, you may have to use stone (e.g., river cobble) to fill in problem areas. ☐ If the erosion is on a side slope, fill with clay that can be compacted and seed and mulch the area. ☐ Other: ☐ Kick-Out to Level 2 Inspection: The problem persists or the erosion is more than 3-inches deep and seems to be an issue with how water enters and moves through the Bioretention cell. ☐ Kick-Out to Level 2 Inspection: The problem does not seem to be caused by flowing water, but a collapse or sinking of the surface (e.g., “sinkhole”) due to some underground problem.
 ☐ The bottom of the Bioretention cell is not flat, and the water pools at one end, along an edge, or in certain pockets. The whole bottom is not uniformly covered with water. See design plan to verify that bioretention surface is intended to be flat. Check during or immediately after a rainstorm.	☐ If the problem is minor (just small, isolated areas are not covered with water), try raking the surface OR adding mulch to low spots to create a more level surface. You may need to remove and replace plantings in order to properly even off the surface. ☐ Check the surface with a string and bubble level to get the surface as flat as possible. ☐ Other: ☐ Kick-Out to Level 2 Inspection: Ponding water is isolated to less than half of the Bioretention surface area, and there seem to be elevation differences of more than a couple of inches across the surface.

BR Ponding Area

Examine the entire Bioretention surface and side slopes

Problem (Check if Present)	Follow-Up Actions
 ☐ Water stands on the surface more than 72 hours after a rainstorm and /or wetland-type vegetation is present. The Bioretention cell does not appear to be draining properly.	☐ Kick-Out to Level 2 Inspection: This is generally a serious problem, and it will be necessary to activate a Level 2 Inspection.

BR Vegetation

Examine all Bioretention cell vegetation.

Problem (Check if Present)	Follow-Up Actions
 ☐ Vegetation requires regular maintenance—pulling weeds, removing dead and diseased plants, replacing mulch around plants, adding plants to fill in areas that are not well vegetated, etc.	☐ If you can identify which plants are weeds or not intended to be part of the planting plan, eliminate these, preferably by hand pulling. ☐ If weeds are widespread, check with the local stormwater authority and/or Extension Office about proper use of herbicides for areas connected with the flow of water. ☐ Even vegetation that is intended to be present can become large, overgrown, and/or crowd out surrounding plants. Prune and thin accordingly. ☐ If weeds or invasive plants have overtaken the whole Bioretention cell , bush-hog the entire area before seedheads form in the spring. It will be necessary to remove the root mat manually or with appropriate herbicides, as noted above. ☐ Re-plant with species that are aesthetically pleasing and seem to be doing well in the Bioretention cell. ☐ Other: ☐ Kick-Out to Level 2 Inspection: You are unsure of the original planting design, or the vegetation maintenance task is beyond your capabilities of time, expertise, or resources. If you are unsure of the health of the vegetation (e.g. salt damage, invasives, which plants are undesirable) or the appropriate season to conduct vegetation management, consult a landscape professional before undertaking any cutting, pruning, mowing, or brush hogging.

BR Vegetation

Examine all Bioretention cell vegetation.

Problem (Check if Present)	Follow-Up Actions
 ☐ Vegetation is too thin, is not healthy, and there are many spots that are not well vegetated.	☐ The original plants are likely not suited for the actual conditions within the Bioretention cell . If you are knowledgeable about plants, select and plant more appropriate vegetation (preferably native plants) so that almost the entire surface area will be covered by the end of the second growing season. ☐ Other: ☐ Kick-Out to Level 2 Inspection: For all but small practices (e.g., rain gardens), this task will likely require a landscape design professional or horticulturalist.

BR Outlets

Examine outlets that release water out of the Bioretention cell.

Problem (Check if Present)	Follow-Up Actions
☐ Erosion at outlet	☐ Add stone to reduce the impact from the water flowing out of the outlet pipe or weir during storms. ☐ Other: ☐ Kick-Out to Level 2 Inspection: Rills have formed and erosion problem becomes more severe.
 ☐ Outlet obstructed with mulch, sediment, debris, trash, etc.	☐ Remove the debris and dispose of it where it cannot re-enter the Bioretention cell . ☐ Other: ☐ Kick-Out to Level 2 Inspection: Outlet is completely clogged or obstructed; there is too much material to remove by hand or with simple hand tools.

Additional Notes:

Inspector:_____ Date: _____

Complete the following if follow-up/corrective actions were identified during this inspection:

Certified Completion of Follow-Up Actions:

"I hereby certify that the follow-up/corrective actions identified in the inspection performed on _____ (DATE) have been completed and any required maintenance deficiencies have been adequately corrected."

Inspector/Operator: _____ Date: _____

NEW YORK STATE OF OPPORTUNITY | Department of Environmental Conservation

Bioretention Stormwater Management Practices Level 2 Inspection Checklist

SMP ID #		**SMP Owner**		☐ Private ☐ Public
SMP Location (Address; Latitude & Longitude)				
	Latitude		**Longitude**	

Party Responsible for Maintenance	**System Type**		**Type of Site**
☐ Same as SMP Owner ☐ Other _____	☐ Seasonal ☐ Continuous Use ☐ Other	☐ Above Ground ☐ Below Ground	☐ Commercial ☐ Industrial ☐ Residential ☐ State

Inspection Date		**Inspection Time**	
Inspector			
Date of Last Inspection			

Level 2 Inspection: BIORETENTION NOTE: Key Source for this Information *(CSN, 2013)*	
Recommended Repairs	**Triggers for Level 3 Inspection**
Observed Condition: Water Stands on Surface for More than 72 Hours after Storm	
☐ Condition 1: Small pockets of standing water Use a soil probe or auger to examine the soil profile. If isolated areas have accumulated grit, fines, or vegetative debris or have bad soil media, try scraping off top 3 inches of media and replacing with clean material. Also check to see that surface is level and water is not ponding selectively in certain areas. ☐ Condition 2: Standing water is widespread or covers entire surface Requires diagnosis and resolution of problem: • Clogged underdrain? • Filter fabric between soil media and underdrain stone? • Need to install underdrain if not present? • Too much sediment/grit washing in from drainage area? • Too much ponding depth? • Improper soil media?	• Soil media is clogged and problem is not evident from Level 2 inspection. • Level 2 inspection identifies problem, but it cannot be resolved easily or is associated with the original design of the practice. ☐ Level 3 inspection necessary
Observed Condition: Vegetation is sparse or out of control	
☐ Condition 1: Original design planting plan seems good but has not been maintained, so there are many invasives and/or dead plants Will require some horticultural experience to restore vegetation to intended condition by weeding, pruning, removing plants, and adding new plants. ☐ Condition 2: Original design planting plan is unknown or cannot be actualized A landscape architect or horticulturalist will be needed to redo the planting plan. Will likely require analysis of soil pH, moisture, organic content, sun/shade, and other conditions to make sure plants match conditions. Plan should include invasive plant management and maintenance plan to include mulching, watering, disease intervention, periodic thinning/pruning, etc.	• Vegetation deviates significantly from original planting plan; Bioretention has been neglected and suffered from deferred maintenance. • Owner/responsible party does not know how to maintain the practice. ☐ Level 3 inspection necessary
Observed Condition: Bioretention does not conform to original design plan in surface area or storage	
☐ Condition 1: Level 2 Inspection reveals that practice is too small based on design dimension, does not have adequate storage (e.g., ponding depth) based on the plan, and/or does not treat the drainage area runoff as indicated on the plan Small areas of deviation can be corrected by the property owner or responsible party, but it is likely that a Qualified Professional will have to revisit the design and attempt a redesign that meets original objectives or that can be resubmitted to the municipality for approval.	• More than a 25% departure from the approved plan in surface area, storage, or drainage area; sometimes less than this threshold at the discretion of the Level 2 inspector. ☐ Level 3 inspection necessary

Level 2 Inspection: BIORETENTION NOTE: Key Source for this Information *(CSN, 2013)*	
Recommended Repairs	**Triggers for Level 3 Inspection**
Observed Condition: Severe erosion of filter bed, inlets, or around outlets	
☐ Condition 1: Erosion at inlets The lining (e.g., grass, matting, stone, rock) may not be adequate for the actual flow velocities coming through the inlets. First line of defense is to try a more non-erosive lining and/or to extend the lining further down to where inlet slopes meet the Bioretention surface. If problem persists, analysis by a Qualified Professional is warranted. ☐ Condition 2: Erosion of Bioretention filter bed This is often caused by "preferential flow paths" through and along the Bioretention surface. The source of flow should be analyzed and methods employed to dissipate energy and disperse the flow (e.g., check dams, rock splash pads). ☐ Condition 3: Erosion on side slopes Again, the issue is likely linked with unanticipated flow paths down the side slopes (probably overland flow that concentrates as it hits the edge of the slope). For small or isolated areas, try filling, compacting, and re-establishing healthy ground cover vegetation. If the problem is more widespread, further analysis is required to determine how to redirect the flow.	• Erosion (rills, gullies) is more than 12 inches deep at inlets or the filter bed or more than 3 inches deep on side slopes. • If the issue is not caused by moving water but some sort of subsurface defect. This may manifest as a sinkhole or linear depression and be associated with problems with the underdrain stone or pipe or underlying soil. ☐ Level 3 inspection necessary
Observed Condition: Significant sediment accumulation, indicating an uncontrolled source of sediment	
☐ Condition 1: Isolated areas of sediment accumulation, generally less than 3-inches deep Sediment source may be from a one-time or isolated event. Remove accumulated sediment and top 2 to 3 inches of Bioretention soil media; replace with clean material. Check drainage area for any ongoing sources of sediment. ☐ Condition 2: Majority of the surface is caked with "hard pan" (thin layer of clogging material) or accumulated sediment that is 3-inches deep or more This can be caused by an improper construction sequence (drainage area not fully stabilized prior to installation of Bioretention soil media) or another chronic source of sediment in the drainage area. Augering several holes down through the media can indicate how severe the problem is; often the damage is confined to the first several inches of soil media. Removing and replacing this top layer (or to the depth where sediment incursion is seen in auger holes) can be adequate, as long as the problem does not recur.	• More than 2 inches of accumulated sediment cover 25% or more of the Bioretention surface area. • "Hard pan" of thin, crusty layer covers majority of Bioretention surface area and seems to be impeding flow of water down through the soil media. • New sources of sediment seem to be accumulating with each significant rainfall event. ☐ Level 3 inspection necessary

Notes:

Inspector:_____ Date: _____

Complete the following if follow-up/corrective actions were identified during this inspection:

Certified Completion of Follow-Up Actions:

"I hereby certify that the follow-up/corrective actions identified in the inspection performed on _____ (DATE) have been completed and any required maintenance deficiencies have been adequately corrected."

Inspector/Operator: _____ Date: _____

Swale Stormwater Management Practices Level 1 Inspection Checklist

SMP ID #		**SMP Owner**		☐ Private ☐ Public
SMP Location (Address; Latitude & Longitude)				
	Latitude		**Longitude**	

Party Responsible for Maintenance	**System Type**		**Type of Site**
☐ Same as SMP Owner ☐ Other _____	☐ Seasonal ☐ Continuous Use ☐ Other	☐ Above Ground ☐ Below Ground	☐ Commercial ☐ Industrial ☐ Residential ☐ State

Inspection Date		**Inspection Time**	
Inspector			
Date of Last Inspection			

SW Drainage Area

Look at areas that are uphill from the swale.

Problem (Check if Present)	Follow-Up Actions
 ☐ Bare soil, erosion of the ground (rills washing out the dirt)	☐ Seed and mulch or sod areas of bare soil to establish vegetation. ☐ Fill in erosion areas with soil, compact, and add seed and straw to establish vegetation. ☐ If a rill or small channel is forming, try to redirect water flowing to this area by creating a small berm or adding topsoil to areas that are heavily compacted. ☐ Other: ☐ Kick-Out to Level 2 Inspection: Large areas of soil have been eroded, or larger channels are forming. May require rerouting of flow paths
 ☐ Piles of grass clippings, mulch, dirt, salt, or other materials	☐ Remove or cover piles of grass clippings, mulch, dirt, etc. ☐ Other:
 ☐ Open containers of oil, grease, paint, or other substances	☐ Cover or properly dispose of materials; consult your local solid waste authority for guidance on materials that may be toxic or hazardous.
☐ Grass dying at edge of road	☐ Seed and mulch; add topsoil or compost if needed. ☐ Other: ☐ Kick-Out to Level 2 Inspection: Grass on edge of pavement continues to die off for unknown reasons. Swale edge may need to be replaced with other materials (e.g., stone diaphragm).

SW Inlets

Stand in the swale and look for all the places where water flows in.

Problem (Check if Present)	Follow-Up Actions
☐ Inlets or the swale edge are collecting grit, grass clippings, or debris or have grass/weeds growing. Some water may not be getting into the swale. The objective is to have a clear pathway for water to flow into the swale.	☐ Use a flat shovel to remove grit and debris (especially at curb inlets or opening). Parking lots will generate fine grit that will accumulate at these spots. ☐ Pull out clumps of growing grass or weeds, and scoop out the soil or grit that the plants are growing in. ☐ Remove any grass clippings, leaves, sticks, and other debris that is collecting at inlets or along the edge of the swale where water is supposed to enter. ☐ For pipes and ditches, remove sediment and debris that is partially blocking the pipe or ditch opening where it enters the swale. ☐ Dispose of all material properly in an area where it will not re-enter the swale. ☐ Other:
	☐ Kick-Out to Level 2 Inspection: Inlets are blocked to the extent that most of the water does not seem to be entering the swale.
 ☐ Some or all of the inlets are eroding so that rills, gullies, and other erosion are present, or there is bare dirt that is washing into the swale.	☐ For small areas of erosion, smooth out the eroded part and apply rock or stone (e.g., river cobble) to prevent further erosion. Usually, filter fabric is placed under the rock or stone. ☐ In some cases, reseeding and applying an erosion control matting can be used to prevent further erosion. Some of these materials may be available at a garden center, but it may be best to consult a landscape contractor. ☐ Other:
	☐ Level 2 Inspection: Erosion is occurring at most of the inlets or along much of the swale edge. The inlet design may have to be modified.

SW Surface Area

Examine the entire swale surface and side slopes.

Problem (Check if Present)	Follow-Up Actions
☐ Minor areas of sediment, grit, trash, or other debris are accumulating in the swale.	☐ Use a shovel to scoop out minor areas of sediment or grit, especially in the spring after winter sanding materials may wash in and accumulate. Dispose of the material where it cannot re-enter the swale. ☐ If removing the material creates a hole or low area, fill with good topsoil and add seed and straw to re-vegetate. ☐ Remove trash, vegetative debris, and other undesirable materials. ☐ If the swale is densely vegetated, it may be difficult to do the maintenance; check for excessive ponding or other issues described in this section to see if the accumulated material is causing a problem. ☐ Other: ☐ Kick-Out to Level 2 Inspection: Sediment has accumulated more than 3 inches deep and covers 25% or more of the swale surface. ☐ The source of sediment is unknown or cannot be controlled with simple measures.
 ☐ There is erosion in the bottom or on the side slopes. Water seems to be carving out rills as it flows through the swale or on the slopes.	☐ Try filling the eroded areas with clean topsoil, and then seed and mulch to establish vegetation. ☐ If the problem recurs, you may have to use some type of matting, stone (e.g., river cobble), or other material to fill in eroded areas. ☐ If the erosion is on a side slope, fill with soil and cover with erosion-control matting or at least straw mulch after re-seeding. ☐ Kick-Out to Level 2 Inspection: The problem persists or the erosion is more than 3 inches deep and seems to be an issue with how water enters and moves through the swale. ☐ Kick-Out to Level 2 Inspection: The problem does not seem to be caused by flowing water, but a collapse or sinking of the surface (e.g., “sinkhole”) due to some underground problem.
☐ Water does not flow evenly down the length of the swale, but ponds in certain areas for long periods of time (e.g., 72 hours after a storm). The swale does not seem to have “positive drainage.” Check during or immediately after a rain storm.	☐ If the problem is minor (just small, isolated areas), try using a metal rake or other tools to create a more even flow path; remove excessive vegetative growth, sediment, or other debris that may be blocking the flow. ☐ Other: ☐ Kick-Out to Level 2 Inspection: Water ponds in more than 25% of the swale for three days or more after a storm. The issue may be with the underlying soil or the grade of the swale. ☐ Water ponds behind check dams for three days or more after a storm. Check dams may be clogged or not functioning properly.

SW Surface Area

Examine the entire swale surface and side slopes.

Problem (Check if Present)	Follow-Up Actions
 ☐ Check dams (if present): water is flowing around the edges of check dams, creating erosion or sinkholes on the uphill or downhill side, or the check dams are breaking apart or breaching .	☐ If the problem is isolated to just a few check dams, try simple repairs. ☐ It is very important for the center of each check dam (where most of the water flows) to be lower (by at least several inches) than the edges of the check dams where they meet the side slopes. Also, the check dams should be keyed into side slopes so water does not flow between the check dam and side slope. ☐ Use a level to check the right check-dam configuration, as noted above. Repair by moving around stone, filling and compacting soil, or adding new material so that water will be directed to the center of the check dam instead of the edges. ☐ Other: ☐ Kick-Out to Level 2 Inspection: Many check dams are impacted and/or the problem seems to be a design issue with height, spacing, shape, or materials used to construct them.

SW Vegetation

Assess the swale vegetation.

Problem (Check if Present)	Follow-Up Actions
 ☐ Vegetation is too overgrown to access swale for maintenance activities	☐ Mow or bush-hog the path. ☐ Other:

SW Vegetation

Assess the swale vegetation.

Problem (Check if Present)	Follow-Up Actions
 ☐ Vegetation requires regular maintenance: pulling weeds, removing dead and diseased plants, adding plants to fill in areas that are not well vegetated, etc.	☐ If you can identify which plants are weeds or not intended to be part of the planting plan, eliminate these, preferably by hand pulling. ☐ If weeds are widespread, check with the local stormwater authority and/or Extension Office about proper use of herbicides for areas connected with the flow of water. ☐ Even vegetation that is intended to be present can become large, overgrown, block flow, and/or crowd out surrounding plants. Prune and thin accordingly. ☐ If weeds or invasive plants have overtaken the whole swale, bush-hog the entire area before seed heads form in the spring. It will be necessary to remove the root mat manually or with appropriate herbicides, as noted above. ☐ Replant with species that are aesthetically pleasing and seem to be doing well in the swale. ☐ Other: ☐ Kick-Out to Level 2 Inspection: You are unsure of the original planting design or the vegetation maintenance task is beyond your capabilities of time, expertise, or resources. If you are unsure of the health of the vegetation (e.g. salt damage, invasives, which plants are undesirable) or the appropriate season to conduct vegetation management, consult a landscape professional before undertaking any cutting, pruning, mowing, or brush hogging.
☐ Vegetation is too thin, is not healthy, and there are many spots that are not well vegetated.	☐ The original plants are likely not suited for the actual conditions within the swale. If you are knowledgeable about plants, select and plant more appropriate vegetation (preferably native plants) so that almost the entire surface area will be covered by the end of the second growing season. ☐ Other: ☐ Kick-Out to Level 2 Inspection: For all but small practices (e.g., in residential yards), this task will likely require a landscape design professional or horticulturalist.

SW Outlets

Examine outlets that release water out of the swale.

Problem (Check if Present)	Follow-Up Actions
☐ Outlet is obstructed with mulch, sediment, debris, trash, etc.	☐ Remove the debris and dispose of it where it cannot re-enter the swale. ☐ Other: ☐ Kick-Out to Level 2 Inspection: Outlet is completely clogged or obstructed; there is too much material to remove by hand or with simple hand tools.

Additional Notes:

Inspector:_____ Date: _____

Complete the following if follow-up/corrective actions were identified during this inspection:

Certified Completion of Follow-Up Actions:

"I hereby certify that the follow-up/corrective actions identified in the inspection performed on _____ (DATE) have been completed and any required maintenance deficiencies have been adequately corrected."

Inspector/Operator: _____ Date: _____

Swale Stormwater Management Practices
Level 2 Inspection Checklist

SMP ID #		**SMP Owner**		☐ Private ☐ Public
SMP Location (Address; Latitude & Longitude)				
	Latitude		**Longitude**	

Party Responsible for Maintenance	**System Type**		**Type of Site**
☐ Same as SMP Owner ☐ Other _____	☐ Seasonal ☐ Continuous Use ☐ Other	☐ Above Ground ☐ Below Ground	☐ Commercial ☐ Industrial ☐ Residential ☐ State

Inspection Date		**Inspection Time**	
Inspector			
Date of Last Inspection			

Level 2 Inspection: SWALE	
Recommended Repairs	**Triggers for Level 3 Inspection**
Observed Condition: Water Stands on Surface for More than 72 Hours after Storm	
☐ Condition 1: Small pockets of standing water Use a soil probe or auger to examine the soil profile. If isolated areas have accumulated grit, fines, or vegetative debris or have compacted soil, try scraping off top 3 to 6 inches of soil and replacing with clean material. Also check to see that surface is level and water is not ponding selectively in certain areas. ☐ Condition 2: Standing water is widespread or covers entire surface Requires diagnosis and resolution of problem: • Bad or compacted soil • Filter fabric on the swale bottom • Too much sediment/grit washing in from drainage area? • Too much ponding depth? • Longitudinal slope is too flat?	• Soil is overly compacted or clogged and problem is not evident from Level 2 inspection. • Level 2 inspection identifies problem, but it cannot be resolved easily or is associated with the original design of the practice (e.g., not enough slope down through the swale). ☐ Level 3 inspection necessary
Observed Condition: Vegetation is predominantly weeds and invasive species	
For a small area, weed and dig up invasive plants. Replant with natives or plants from original planting plan. If longer than 100 feet, develop a new planting plan and have it professionally reviewed.	• Vegetation deviates significantly from original planting plan; swale has been neglected and suffered from deferred maintenance. • Owner/responsible party does not know how to maintain the practice. • For large area, hire a professional to develop a grading plan and develop a planting plan. ☐ Level 3 inspection necessary

Notes:

Inspector:_____ Date: _____

Complete the following if follow-up/corrective actions were identified during this inspection:

Certified Completion of Follow-Up Actions:

"I hereby certify that the follow-up/corrective actions identified in the inspection performed on _____ (DATE) have been completed and any required maintenance deficiencies have been adequately corrected."

Inspector/Operator: _____ Date: _____

Appendix K

NOTICE OF INTENT (NOI) AND MS4 ACCEPTANCE FORM

NEW YORK STATE OF OPPORTUNITY | Department of Environmental Conservation

SWPPP Preparer Certification Form

SPDES General Permit for Stormwater Discharges From Construction Activity (GP-0-20-001)

Project Site Information

Project/Site Name

Caesar's Lane WWTP Expansion Project

Owner/Operator Information

Owner/Operator (Company Name/Private Owner/Municipality Name)

Town of New Windsor

Certification Statement – SWPPP Preparer

I hereby certify that the Stormwater Pollution Prevention Plan (SWPPP) for this project has been prepared in accordance with the terms and conditions of the GP-0-20-001. Furthermore, I understand that certifying false, incorrect or inaccurate information is a violation of this permit and the laws of the State of New York and could subject me to criminal, civil and/or administrative proceedings.

Matthew	J	Sickler
First name	MI	Last Name

Signature

November 14, 2024
Date

NEW YORK STATE OF OPPORTUNITY | Department of Environmental Conservation

Owner/Operator Certification Form

SPDES General Permit For Stormwater Discharges From Construction Activity (GP-0-20-001)

Project/Site Name: New Windsor Waste Water Treatment Plant

eNOI Submission Number: HQ9-Z215-GAYVZ

eNOI Submitted by: ☐ **Owner/Operator** ☑ **SWPPP Preparer** ☐ **Other**

Certification Statement - Owner/Operator

I have read or been advised of the permit conditions and believe that I understand them. I also understand that, under the terms of the permit, there may be reporting requirements. I hereby certify that this document and the corresponding documents were prepared under my direction or supervision. I am aware that there are significant penalties for submitting false information, including the possibility of fine and imprisonment for knowing violations. I further understand that coverage under the general permit will be identified in the acknowledgment that I will receive as a result of submitting this NOI and can be as long as sixty (60) business days as provided for in the general permit. I also understand that, by submitting this NOI, I am acknowledging that the SWPPP has been developed and will be implemented as the first element of construction, and agreeing to comply with all the terms and conditions of the general permit for which this NOI is being submitted.

Owner/Operator First Name Stephen M.I. A Last Name Beyett

Signature

1/28/2025

Date

NEW YORK STATE DEPARTMENT OF ENVIRONMENTAL CONSERVATION
Division of Water, Bureau of Water Permits
625 Broadway, Albany, New York 12233-3505
P: (518) 402-8111 F: (518) 402-9029
www.dec.ny.gov

1/29/2025

Town of New Windsor
Stephen Bedetti
555 Union Avenue
New Windsor, New York 12553

RE: ACKNOWLEDGMENT of NOTICE OF INTENT for Coverage Under SPDES General Permit for Storm Water Discharges from CONSTRUCTION ACTIVITY – General Permit No. GP-0-20-001

Dear Prospective Permittee:

This is to acknowledge that the New York State Department of Environmental Conservation (Department) has received a complete Notice of Intent (NOI) for coverage under General Permit No. GP-0-20-001 for the construction activities located at:

New Windsor Waste Water Treatment Plant
145 Caesars Lane
Town of New Windsor, NY 12553 **County: ORANGE**

Pursuant to Environmental Conservation Law (ECL) Article 17, Titles 7 and 8, and ECL Article 70, coverage under GP-0-20-001 for the above construction site is effective five (5) business days from **1/28/2025**, which is the date the Department received your complete eNOI.

The permit identification number for this site is: **NYR11N830**. Be sure to include this permit identification number on any forms or correspondence you send the Department. When coverage under GP-0-20-001 is no longer needed, you must submit a Notice of Termination to the Department.

Additionally, authorization to discharge under GP-0-20-001 is conditioned upon compliance with Part II.C. of GP-0-20-001, specifically the following:

1. A final Storm Water Pollution Prevention Plan has been prepared;

2. When applicable, project review pursuant to the State Environmental Quality Review Act (SEQRA) has been satisfied;

3. Where required, all necessary Department permits subject to the Uniform Procedures Act (UPA) (see 6 NYCRR Part 621), or the equivalent from another New York State agency, have been obtained, unless otherwise notified by the Department pursuant to 6 NYCRR 621.3(a)(4).

If other UPA permits, or the equivalent, are required, you must submit a preliminary SWPPP to the appropriate Permit Administrator at the Regional Office listed in Appendix F to GP-0-20-001. The preliminary SWPPP must be submitted at the time that the applications for all other UPA permits, or the equivalent, are submitted to the Department.

Note: Construction cannot commence until all of the above have been satisfied.

Please be advised that there is an annual regulatory fee of $110, which is billed by the Department in the late fall. The regulatory fee covers a period of one calendar year. In addition, since September 1, 2004, construction stormwater permittees have been assessed an initial authorization fee which is now $110 per acre of land disturbed and $675 per acre of future impervious area. The initial authorization fee covers the duration of the authorized disturbance.

Should you have any questions regarding any aspect of the requirements specified in GP-0-20-001, please contact me at (518) 402-8188.

Sincerely,

John Muthersbaugh

John Muthersbaugh
Assistant Engineer

cc: RWE - **3**
SWPPP Preparer
MHE Engineering
Sickler, Matthew
111 Wheatfield Drive, Suite 1
Milford, PA 18337

NEW YORK STATE OF OPPORTUNITY | Department of Environmental Conservation

NYS Department of Environmental Conservation
Division of Water
625 Broadway, 4th Floor
Albany, New York 12233-3505

MS4 Stormwater Pollution Prevention Plan (SWPPP) Acceptance Form

for

Construction Activities Seeking Authorization Under SPDES General Permit

*(NOTE: Attach Completed Form to Notice Of Intent and Submit to Address Above)

I. Project Owner/Operator Information	
1. Owner/Operator Name:	Town of New Windsor
2. Contact Person:	Stephen A. Bedetti, Town Supervisor
3. Street Address:	555 Union Avenue
4. City/State/Zip:	New Windsor, NY 12553
II. Project Site Information	
5. Project/Site Name:	Caesars Lane Wastewater Treatment Plant
6. Street Address:	145 Caesars Lane
7. City/State/Zip:	New Windsor, NY 12553
III. Stormwater Pollution Prevention Plan (SWPPP) Review and Acceptance Information	
8. SWPPP Reviewed by:	Michael W. Weeks, P.E.
9. Title/Position:	Principal
10. Date Final SWPPP Reviewed and Accepted:	01/07/2025
IV. Regulated MS4 Information	
11. Name of MS4:	Town of New Windsor
12. MS4 SPDES Permit Identification Number: NYR20A	
13. Contact Person:	Michael Weeks, Town Engineer
14. Street Address:	555 Union Avenue
15. City/State/Zip:	New Windsor, NY 12553
16. Telephone Number:	845-565-8800

MS4 SWPPP Acceptance Form - continued

V. Certification Statement - MS4 Official (principal executive officer or ranking elected official) or Duly Authorized Representative

I hereby certify that the final Stormwater Pollution Prevention Plan (SWPPP) for the construction project identified in question 5 has been reviewed and meets the substantive requirements in the SPDES General Permit For Stormwater Discharges from Municipal Separate Storm Sewer Systems (MS4s). Note: The MS4, through the acceptance of the SWPPP, assumes no responsibility for the accuracy and adequacy of the design included in the SWPPP. In addition, review and acceptance of the SWPPP by the MS4 does not relieve the owner/operator or their SWPPP preparer of responsibility or liability for errors or omissions in the plan.

Printed Name:	Stephen A. Bedetti
Title/Position:	Town Supervisor
Signature:	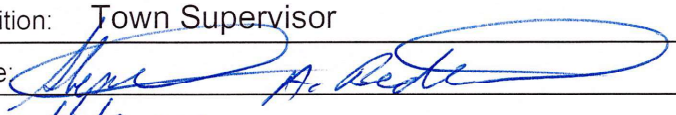
Date:	1/7/2025

VI. Additional Information

(NYS DEC - MS4 SWPPP Acceptance Form - January 2015)

Appendix L

CONTRACTORS CERTIFICATION FORM

CONTRACTOR and SUBCONTRACTOR CERTIFICATION STATEMENT

for the New York State Department of Environmental Conservation (DEC) State Pollutant Discharge Elimination System Permit for Stormwater Discharges from Construction Activity (GP-0-20-001)

'Prior to the *commencement of construction activity*, the *owner or operator* must identify the contractor(s) and subcontractor(s) that will be responsible for installing, constructing, repairing, replacing, inspecting and maintaining the erosion and sediment control practices included in the SWPPP; and the contractor(s) and subcontractor(s) that will be responsible for constructing the post-construction stormwater management practices included in the SWPPP. The *owner or operator* shall have each of the contractors and sub-contractors identify at least one person from their company that will be responsible for implementation of the SWPPP. This person shall be known as the *trained contractor*. The *owner or operator* shall ensure that at least one *trained contractor* is on site on a daily basis when soil disturbance activities are being performed.'

The *owner or operator* shall have each contractor and subcontractor involved in soil disturbance sign a copy of the following certification statement before they commence <u>any</u> *construction activity*:

_____	**NYR** _____	_____
Name of Construction Site	*DEC Permit ID*	*Municipality (MS4)*

I hereby certify under penalty of law that I understand and agree to comply with the terms and conditions of the SWPPP and agree to implement any corrective actions identified by the *qualified inspector* during a site inspection. I also understand that the *owner or operator* must comply with the terms and conditions of the most current version of the New York State Pollutant Discharge Elimination System ("SPDES") general permit for stormwater *discharges* from *construction activities* and that it is unlawful for any person to cause or contribute to a violation of *water quality standards*. Furthermore, I am aware that there are significant penalties for submitting false information, that I do not believe to be true, including the possibility of fine and imprisonment for knowing violations.

Responsible Corporate Officer/Partner Signature	Date
Name of above Signatory	Name of Company
Title of above Signatory	Mailing Address
Telephone of Company	City, State and Zip

Identify the specific elements of the SWPPP the contractor or subcontractor is responsible for:

'*TRAINED CONTRACTOR*' FOR THE CERTIFIED CONTRACTOR OR SUBCONTRACTOR

_____	_____	_____
Name of Trained Employee	*Title of Trained Employee*	*NYSDEC SWT #*

A copy of this signed contractor certification statement must be maintained at the SWPPP on site

Appendix M

NYSDEC PERMIT FOR OUTFALL ABANDONMENT

PERMIT

Under the Environmental Conservation Law (ECL)

Permittee and Facility Information

Permit Issued To:
TOWN OF NEW WINDSOR
555 UNION AVE
NEW WINDSOR, NY 12553-6140
(845) 567-4600

Facility:
Caesars Lane Wastewater Treatment Plant
CAESARS LN
NEW WINDSOR, NY 12550

Facility Location: in NEW WINDSOR in ORANGE COUNTY
Facility Principal Reference Point: NYTM-E: 581.291 NYTM-N: 4590.355
Latitude: 41°27'38.4" Longitude: 74°01'35.8"
Project Location: Existing outfall at the mouth of Moodna Creek
Authorized Activity: This permit authorizes disturbance to Freshwater Wetland CO-10, Class 1 and excavation/fill within the Moodna Creek (NYS WIN H-89, Class C) below mean high associated with the removal of the above grade features of the existing sanitary sewer outfall associated with State Pollutant Discharge Elimination System (SPDES) permit NY0022446, which is being relocated to the treatment plant.

Permit Authorizations

Freshwater Wetlands - Under Article 24
Permit ID 3-3348-00055/00016
New Permit Effective Date: 12/18/2023 Expiration Date: 12/31/2028
Excavation & Fill in Navigable Waters - Under Article 15, Title 5
Permit ID 3-3348-00055/00017
New Permit Effective Date: 12/18/2023 Expiration Date: 12/31/2028

NYSDEC Approval

By acceptance of this permit, the permittee agrees that the permit is contingent upon strict compliance with the ECL, all applicable regulations, and all conditions included as part of this permit.

Permit Administrator: REBECCA S CRIST, Deputy Regional Permit Administrator
Address: NYSDEC Region 3 Headquarters
21 S Putt Corners Rd
New Paltz, NY 12561

Authorized Signature: Rebecca S. Crist Date 12 / 18 /2023

Distribution List

Michael Weeks, McGoey, Hauser & Edsall Consulting
Army Corps of Engineers
Orange County Department of Health
Angela Schimizzi, NYSDEC Div of Marine Resoures R3
Michael Fraatz, NYSDEC Bur. of Ecosystem Health R3
Lisa Masi, NYSDEC Bureau of Wildlife, R3
Manju Cherian, NYSDEC Division of Water, R3
Evan Masten, NYS Division of Lands & Forests, R3

Permit Components

NATURAL RESOURCE PERMIT CONDITIONS

GENERAL CONDITIONS, APPLY TO ALL AUTHORIZED PERMITS

NOTIFICATION OF OTHER PERMITTEE OBLIGATIONS

NATURAL RESOURCE PERMIT CONDITIONS - Apply to the Following Permits: FRESHWATER WETLANDS; EXCAVATION & FILL IN NAVIGABLE WATERS

1. **Conformance With Plans** All activities authorized by this permit must be in strict conformance with the approved plans submitted by the applicant or applicant's agent as part of the permit application. Such approved plans were prepared by McGoey, Hauser & Edsall. consisting of Sheet C-103, “Site Plan And Typical Details & Notes”. Any work described in the approved plans that was completed prior to the effective date of this permit is not authorized by this permit..

2. **Post Permit Sign** The permit sign enclosed with this permit shall be posted in a conspicuous location on the worksite and adequately protected from the weather.

3. **Notice of Intent to Commence Work** The Permittee shall notify the Department 48 hours prior to the commencement of work on the project by emailing Angela Schimizzi, angela.schimizzi@dec.ny.gov. The email needs to include the permit number, permittee name, and the project start date.

4. **Manhole Abandonment** As specified in approved plan, all manholes to be abandoned will have any frames, grates, and concrete risers removed to at least 1 ft below existing grade. Any remaining structure will be filled with rip-rap and topped with clean soil to match existing grade.

5. **Remnant Access Road Structures to Be Removed and Area Restored** The existing 48” pipe stream crossing and exposed geotextile in vicinity to be removed completely. Area to be restored to

match existing conditions and the stream grade restored to the level prior to installation. All removal must be to the satisfaction of the Department.

All existing geotextile will be cut back to a minimum of 30 feet from the stream embankments.

6. **Prohibition Period for Nesting Birds** To protect nesting marsh birds, including threatened and/or endangered species, no outfall removal activities may occur between April 15th and August 31st of any calendar year.

7. **Removal of Trees on State Lands** Minimal cutting of woody vegetation will be allowed. The permittee must meet with Department forester before any trees are cut.

One (1) week prior to commencing any tree or vegetation clearing pursuant to this permit, the limits of route shall be flagged and any live trees 6" diameter or larger to be removed outside of the flagged route must be marked. A DEC State Lands Forester shall inspect the route and trees to be removed prior to the start of clearing.

All tree limbs shall be cut/pruned perpendicular to the branch outside the branch collar. All pruning shall conform to ANSI 300 (Part 1) Tree Pruning Standards.

The stumps of the trees to be removed must be a height of 6" or less.

8. **Use of Motorized Equipment on State Lands** The permittee must call the Forester, Evan Masten, at (845) 256-3074 before any motorized equipment moves on to DEC State Lands and before machinery moves off of DEC State Lands.

9. **In-Water Work During Low Tide Only** Work below Mean High Water shall occur only during the period 2 hours before and after the scheduled low tide.

10. **Clean Fill Only** All fill shall consist of clean soil, sand and/or gravel that is free of the following substances: asphalt, slag, flyash, broken concrete, demolition debris, garbage, household refuse, tires, woody materials including tree or landscape debris, and metal objects. The introduction of materials toxic to aquatic life is expressly prohibited.

11. **No Construction Debris in Wetland or Adjacent Area** Any debris or excess materials from construction of this project (including earth, construction materials, trees and stumps) shall be immediately and completely removed from the wetland and adjacent area to an appropriate upland area for disposal.

12. **No Equipment in the Water** Heavy equipment operation in the water is prohibited. With backhoes and similar heavy equipment, the bucket may enter the water.

13. **Seed, Mulch Disturbed Soils** All areas of soil disturbance resulting from this project (above the mean high water line) shall be seeded with an appropriate seed mix and mulched with straw within one week of final grading.

14. **Precautions Against Contamination of Waters** All necessary precautions shall be taken to preclude contamination of any wetland or waterway by suspended solids, sediments, fuels, solvents, lubricants, epoxy coatings, paints, concrete, leachate or any other environmentally deleterious materials associated with the project.

15. **No Interference With Navigation** There shall be no unreasonable interference with navigation by the work herein authorized.

16. **State Not Liable for Damage** The State of New York shall in no case be liable for any damage or injury to the structure or work herein authorized which may be caused by or result from future operations undertaken by the State for the conservation or improvement of navigation, or for other purposes, and no claim or right to compensation shall accrue from any such damage.

17. **State May Require Site Restoration** If upon the expiration or revocation of this permit, the project hereby authorized has not been completed, the applicant shall, without expense to the State, and to such extent and in such time and manner as the Department of Environmental Conservation may lawfully require, remove all or any portion of the uncompleted structure or fill and restore the site to its former condition. No claim shall be made against the State of New York on account of any such removal or alteration.

18. **State May Order Removal or Alteration of Work** If future operations by the State of New York require an alteration in the position of the structure or work herein authorized, or if, in the opinion of the Department of Environmental Conservation it shall cause unreasonable obstruction to the free navigation of said waters or flood flows or endanger the health, safety or welfare of the people of the State, or cause loss or destruction of the natural resources of the State, the owner may be ordered by the Department to remove or alter the structural work, obstructions, or hazards caused thereby without expense to the State, and if, upon the expiration or revocation of this permit, the structure, fill, excavation, or other modification of the watercourse hereby authorized shall not be completed, the owners, shall, without expense to the State, and to such extent and in such time and manner as the Department of Environmental Conservation may require, remove all or any portion of the uncompleted structure or fill and restore to its former condition the navigable and flood capacity of the watercourse. No claim shall be made against the State of New York on account of any such removal or alteration.

GENERAL CONDITIONS - Apply to ALL Authorized Permits:

1. **Facility Inspection by The Department** The permitted site or facility, including relevant records, is subject to inspection at reasonable hours and intervals by an authorized representative of the Department of Environmental Conservation (the Department) to determine whether the permittee is complying with this permit and the ECL. Such representative may order the work suspended pursuant to ECL 71- 0301 and SAPA 401(3).

The permittee shall provide a person to accompany the Department's representative during an inspection to the permit area when requested by the Department.

A copy of this permit, including all referenced maps, drawings and special conditions, must be available for inspection by the Department at all times at the project site or facility. Failure to produce a copy of the permit upon request by a Department representative is a violation of this permit.

2. **Relationship of this Permit to Other Department Orders and Determinations** Unless expressly provided for by the Department, issuance of this permit does not modify, supersede or rescind any order

or determination previously issued by the Department or any of the terms, conditions or requirements contained in such order or determination.

3. **Applications For Permit Renewals, Modifications or Transfers** The permittee must submit a separate written application to the Department for permit renewal, modification or transfer of this permit. Such application must include any forms or supplemental information the Department requires. Any renewal, modification or transfer granted by the Department must be in writing. Submission of applications for permit renewal, modification or transfer are to be submitted to:

Regional Permit Administrator
NYSDEC Region 3 Headquarters
21 S Putt Corners Rd
New Paltz, NY12561

4. **Submission of Renewal Application** The permittee must submit a renewal application at least 30 days before permit expiration for the following permit authorizations: Excavation & Fill in Navigable Waters, Freshwater Wetlands.

5. **Permit Modifications, Suspensions and Revocations by the Department** The Department reserves the right to exercise all available authority to modify, suspend or revoke this permit. The grounds for modification, suspension or revocation include:

a. materially false or inaccurate statements in the permit application or supporting papers;

b. failure by the permittee to comply with any terms or conditions of the permit;

c. exceeding the scope of the project as described in the permit application;

d. newly discovered material information or a material change in environmental conditions, relevant technology or applicable law or regulations since the issuance of the existing permit;

e. noncompliance with previously issued permit conditions, orders of the commissioner, any provisions of the Environmental Conservation Law or regulations of the Department related to the permitted activity.

6. **Permit Transfer** Permits are transferrable unless specifically prohibited by statute, regulation or another permit condition. Applications for permit transfer should be submitted prior to actual transfer of ownership.

NOTIFICATION OF OTHER PERMITTEE OBLIGATIONS

Item A: Permittee Accepts Legal Responsibility and Agrees to Indemnification
The permittee, excepting state or federal agencies, expressly agrees to indemnify and hold harmless the Department of Environmental Conservation of the State of New York, its representatives, employees, and agents ("DEC") for all claims, suits, actions, and damages, to the extent attributable to the permittee's acts or omissions in connection with the permittee's undertaking of activities in connection with, or operation and maintenance of, the facility or facilities authorized by the permit whether in

compliance or not in compliance with the terms and conditions of the permit. This indemnification does not extend to any claims, suits, actions, or damages to the extent attributable to DEC's own negligent or intentional acts or omissions, or to any claims, suits, or actions naming the DEC and arising under Article 78 of the New York Civil Practice Laws and Rules or any citizen suit or civil rights provision under federal or state laws.

Item B: Permittee's Contractors to Comply with Permit
The permittee is responsible for informing its independent contractors, employees, agents and assigns of their responsibility to comply with this permit, including all special conditions while acting as the permittee's agent with respect to the permitted activities, and such persons shall be subject to the same sanctions for violations of the Environmental Conservation Law as those prescribed for the permittee.

Item C: Permittee Responsible for Obtaining Other Required Permits
The permittee is responsible for obtaining any other permits, approvals, lands, easements and rights-of-way that may be required to carry out the activities that are authorized by this permit.

Item D: No Right to Trespass or Interfere with Riparian Rights
This permit does not convey to the permittee any right to trespass upon the lands or interfere with the riparian rights of others in order to perform the permitted work nor does it authorize the impairment of any rights, title, or interest in real or personal property held or vested in a person not a party to the permit.

Item E: SEQR Unlisted Action, No Significant Impact Under the State Environmental Quality Review Act (SEQR), the project associated with this permit is classified as an Unlisted Action with New Windsor Town Board designated as the lead agency. It has been determined that the project will not have a significant effect on the environment.

New York State

Department of Environmental Conservation

NOTICE

The Department of Environmental Conservation (DEC) has issued permit(s) pursuant to the Environmental Conservation Law for work being conducted at this site. For further information regarding the nature and extent of work approved and any Department condition on it, contact the DEC at 845-256-3054 or dep.r3@dec.ny.gov. Please refer to the permit number shown when contacting the DEC.

Permittee: Town of New Windsor

Permit No. 3-3348-00055/00016&17

Effective Date: 12/18/2023

Expiration Date: 12/31/2023

For Work at the Existing Outfall at the Mouth of the Moodna Creek

NOTE: This notice is **NOT** a permit.

EXHIBIT F

Bid Plans For Caesars Lane WWTP Expansion Project: Phase 1

CAESARS LANE WWTP EXPANSION PROJECT: PHASE 1

145 CAESARS LN., NEW WINDSOR, NY 12553

Town Officials	
Supervisor -	Stephen A. Bedetti
Council Persons -	Steve Moreau Sylvia Santiago Eve Lincoln Charles H. Broe
Town Clerk -	Patricia A. Clarino

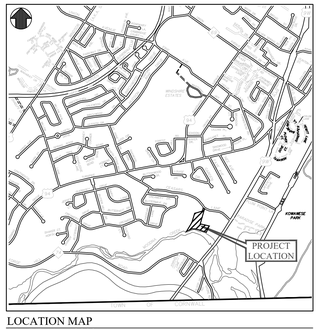

LOCATION MAP
SCALE : 1" = 2000'

LEGEND

—PL—	EXIST. PROPERTY/LOT LINE
W	EXIST. WATER PIPE
W	EXIST. WATER PIPE TO BE ABANDONED
W.V.	EXIST. WATER VALVE
HYD.	EXIST. HYDRANT
X X	EXIST. CHAIN LINK FENCE
+ 490.0	EXIST. SPOT ELEV.
490	EXIST. 5' CONTOUR
492	EXIST. 1' CONTOUR
U.P.	EXIST. UTILITY POLE
OHP	EXIST. OVERHEAD UTILITY LINES
S	EXIST. SANITARY MANHOLE
	EXIST. SANITARY PIPE
S	EXIST. SANITARY LATERAL
	EXIST. CATCH BASIN
	EXIST. STORM SEWER PIPE
G	EXIST. GAS MAIN
G.V.	EXIST. GAS VALVE
W	PROP. WATER LINE / WATER SERVICE
W.V.	PROP. WATER VALVE
C.S.V.	PROP. CURB STOP VALVE
	PROP. HYDRANT

MHE ENGINEERING
33 Airport Center Drive, Suite 202
New Windsor, NY 12553
(845) 567-3100
111 Wheatfield Drive, Suite 1
Milford, PA 18337
(570) 296-2765

BID SET

UDIG·NY
SAFE DIGGING STARTS HERE
CALL 811

ALL PRODUCTION & INTELLECTUAL PROPERTY RIGHT RESERVED ©

CAESARS LANE WWTP EXPANSION PROJECT: PHASE 1
145 CAESARS LN.
NEW WINDSOR, NY 12553
FOR TOWN OF NEW WINDSOR
555 UNION AVE.
NEW WINDSOR, NY 12553

TITLE PAGE

REVISIONS

NO.	DESCRIPTION	DATE

ISSUED DATE:	21 NOV, 2024
DESIGN BY:	MJS
DRAWN BY:	HPBJr
CHECKED BY:	MWW
REVIEWED BY:	MJL

SHEET NO.
T-101

PROJECT # 18-732 PHASE # 1

F:\2018\18-732 Caesar Lane WWTP Improvements\Expansion Phase I - CDBG\Drafting\Phase 1 Cover Sheet.dwg, T-101, 11/21/2024 12:57:41 PM

TITLE PAGE & DRAWING INDEX

DWG No.	DESCRIPTION
T-101	TITLE PAGE
T-102	DRAWING INDEX SHEET 1

CIVIL - PROCESS DRAWING LIST

DWG No.	DESCRIPTION
	100 SERIES - SITE
C-101	OVERALL EXISTING PLANT SITE PLAN
C-102	KEY PLAN FOR NEW WORK
C-103	NEW WORK AREA DEMOLITION PLAN
C-104	NEW CONTROL BUILDING SITE PLAN SHEET 1 OF 2
C-105	NEW CONTROL BUILDING SITE PLAN SHEET 2 OF 2
C-106	EROSION & SEDIMENT CONTROL PLAN
C-107	EXISTING CONTROL BUILDING SITE PLAN
	200 SERIES - SITE DETAILS
C-201	WATER MAIN PROFILE & DETAILS
C-202	SANITARY SEWER, STORM & SITE DETAILS
C-203	SITE DETAILS
C-204	EROSION & SEDIMENT CONTROL NOTES AND DETAILS

ARCHITECTURAL DRAWING LIST

DWG No.	DESCRIPTION
G-001	ADA CLEARANCES, ABBREVIATIONS & LEGEND
	700 SERIES - EXISTING CONTROL BLDG. / DEWATERING
AD-701	DEWATERING BUILDING - LOWER LEVEL DEMOLITION PLAN, EXISTING INCINERATOR PHOTOS & NOTES
AD-702	DEWATERING BUILDING - UPPER LEVEL DEMOLITION PLAN & NOTES
AD-703	DEWATERING BUILDING - ROOF DEMOLITION PLAN & NOTES
AD-704	DEWATERING BUILDING - EXTERIOR ELEVATIONS DEMOLITION, PHOTOS & NOTES
A-701	DEWATERING BUILDING - LOWER LEVEL FLOOR PLAN & NOTES
A-702	DEWATERING BUILDING - UPPER LEVEL FLOOR PLAN & DETAILS
A-703	DEWATERING BUILDING - ROOF PLAN, DETAILS & NOTES
	900 SERIES - NEW CONTROL BUILDING
G-901	CONTROL BUILDING - EGRESS PLAN, CODE ANALYSIS & DETAILS
A-901	CONTROL BUILDING - FLOOR PLAN & WALL TYPES
A-902	CONTROL BUILDING - ROOF PLAN & DETAILS
A-903	CONTROL BUILDING - EXTERIOR ELEVATIONS
A-904	CONTROL BUILDING - SECTIONS
A-905	CONTROL BUILDING - INTERIOR PLAN, ELEVATIONS & DETAILS
A-906	CONTROL BUILDING - FLOOR PLAN LAB & INTERIOR ELEVATIONS
A-907	CONTROL BUILDING - WINDOW, DOOR & MISCELLANEOUS DETAILS & SCHEDULES
A-908	CONTROL BUILDING - REFLECTED CEILING PLAN & CEILING DETAILS
A-909	CONTROL BUILDING - FINISH FLOOR PLAN, SCHEDULE & DETAILS

STRUCTURAL DRAWING LIST

DWG No.	DESCRIPTION
	100 SERIES - SITE WORK RETAINING WALLS
S-100	CONTROL BUILDING RETAINING WALL (WALL #1) NOTES
S-101	CONTROL BUILDING RETAINING WALL (WALL #1) ELEVATIONS, SECTIONS & DETAILS
	700 SERIES - SLUDGE DEWATERING BUILDING
S-700	SLUDGE DEWATERING BUILDING MODIFICATION NOTES
S-701	SLUDGE DEWATERING BUILDING - GROUND LEVEL MODIFICATION PLAN
S-702	SLUDGE DEWATERING BUILDING - UPPER LEVEL MODIFICATION PLAN
S-703	SLUDGE DEWATERING BUILDING - ROOF MODIFICATION PLAN
S-704	SLUDGE DEWATERING BUILDING - SECTIONS
S-705	SLUDGE DEWATERING BUILDING - STRUCTURAL DETAILS
S-706	SLUDGE DEWATERING BUILDING - STRUCTURAL DETAILS CONTINUED
S-707	RETAINING WALL DETAILS AND ELEVATION
	900 SERIES - NEW CONTROL BUILDING
S-900	CONTROL BUILDING - STRUCTURAL NOTES AND PROVISIONS
S-901	CONTROL BUILDING - FOUNDATION PLAN
S-902	CONTROL BUILDING - SLAB PLAN
S-903	CONTROL BUILDING - WALL FRAMING PLAN
S-904	CONTROL BUILDING - ROOF FRAMING PLAN
S-905	CONTROL BUILDING - BUILDING SECTIONS
S-906	CONTROL BUILDING - WALL SECTIONS

ELECTRICAL DRAWING LIST

DWG No.	DESCRIPTION
	000 SERIES - SCHEMATICS
E-001	ELECTRICAL LEGENDS, ABBREVIATIONS & NOTES
E-010	ELECTRICAL NEW WORK SINGLE LINE DIAGRAMS
E-030	ELECTRICAL DETAILS
E-031	ELECTRICAL DETAILS
E-040	ELECTRICAL SCHEDULES
E-041	ELECTRICAL SCHEDULES
	100 SERIES - SITE WORK
E-100	ELECTRICAL SITE PLAN - NEW WORK
	700 SERIES - DEWATERING BUILDING
E-700	ELECTRICAL DEMOLITION PLAN - DEWATERING BUILDING
	900 SERIES - NEW CONTROL BUILDING
E-900	ELECTRICAL POWER PLAN - CONTROL BUILDING
E-901	ELECTRICAL SYSTEMS PLAN - CONTROL BUILDING
E-902	ELECTRICAL LIGHTING PLAN - CONTROL BUILDING

MECHANICAL DRAWING LIST

DWG No.	DESCRIPTION
	000 SERIES - SCHEMATICS
M-001	MECHANICAL LEGENDS, ABBREVIATIONS & NOTES
M-030	MECHANICAL DETAILS
M-040	MECHANICAL SCHEDULES
	900 SERIES - NEW CONTROL BUILDING
M-900	MECHANICAL FLOOR PLAN - NEW WORK

PLUMBING DRAWING LIST

DWG No.	DESCRIPTION
	000 SERIES - SCHEMATICS
P-001	PLUMBING LEGENDS, ABBREVIATIONS & NOTES
P-030	PLUMBING DETAILS & SCHEDULES
	900 SERIES - NEW CONTROL BUILDING
P-900	PLUMBING FLOOR PLAN - CONTROL BUILDING
P-901	PLUMBING FLOOR PLAN - CONTROL BUILDING

MHE ENGINEERING
33 Airport Center Drive, Suite 202
New Windsor, NY 12553
(845) 567-3100
111 Wheatfield Drive, Suite 1
Milford, PA 18337
(570) 296-2765

BID SET

UDIG·NY SAFE DIGGING STARTS HERE
CALL 811

ALL PRODUCTION & INTELLECTUAL PROPERTY RIGHT RESERVED ©

CAESARS LANE WWTP EXPANSION PROJECT: PHASE 1
145 CAESARS LN.
NEW WINDSOR, NY 12553
FOR TOWN OF NEW WINDSOR
555 UNION AVE.
NEW WINDSOR, NY 12553

DRAWING INDEX

REVISIONS

NO.	DESCRIPTION	DATE

ISSUED DATE:	21 NOV, 2024
DESIGN BY:	MJS
DRAWN BY:	HPBJr
CHECKED BY:	MWW
REVIEWED BY:	**MJL**

SHEET NO.

T-102

PROJECT # 18-732 PHASE # 1

F:\2018\18-732 Caesar Lane WWTP Improvements\Expansion Phase I - CDS\2Cdrafing\Phase 1 Cover Sheet.dwg, T-102, 11/21/2024 12:57:41 PM

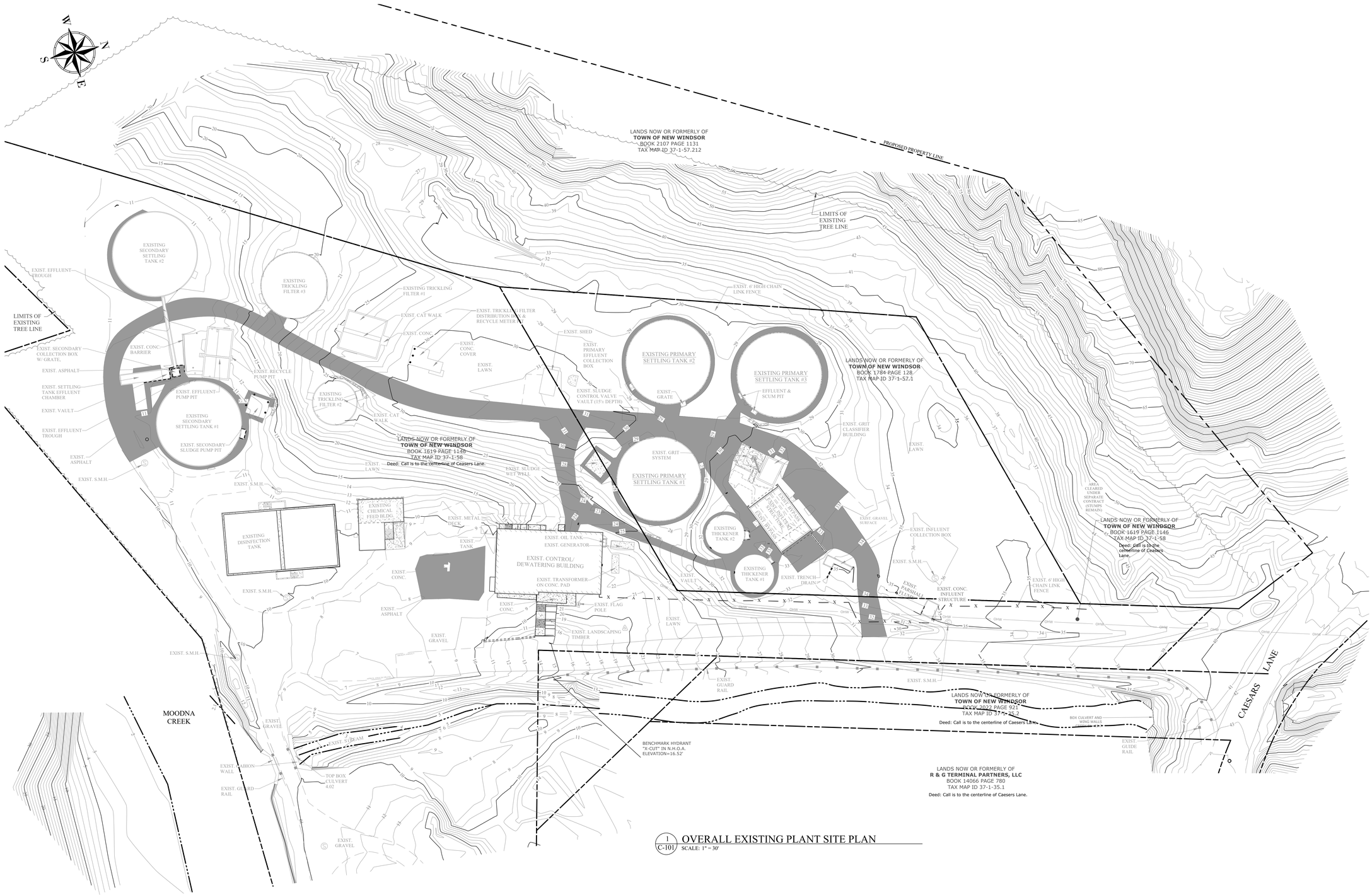

1 / C-101 OVERALL EXISTING PLANT SITE PLAN
SCALE: 1" = 30'

GRAPHIC SCALE
30 0 15 30 60 120
1 inch = 30 feet

MHE ENGINEERING
33 Airport Center Drive, Suite 202
New Windsor, NY 12553
(845) 567-3100
111 Wheatfield Drive, Suite 1
Milford, PA 18337
(570) 296-2765

BID SET

HAZARDOUS MATERIAL NOTE:
THE SERVICES PROVIDED BY MHE, INCLUDING ALL WORK DEPICTED ON MHE PLANS, DO NOT INCLUDE SERVICES RELATED TO THE IDENTIFICATION, CONTROLS OR HANDLING OF HAZARDOUS MATERIALS, INCLUDING SUCH MATERIALS AS ASBESTOS AND LEAD PAINT. ALL TESTING, IDENTIFICATION, ABATEMENT, CONTROLS, AND HANDLING OF HAZARDOUS MATERIALS SHALL BE UNDERTAKEN BY A HAZARDOUS MATERIAL CONSULTANT AND CERTIFIED PROFESSIONALS. IF SUCH MATERIALS HAVE BEEN IDENTIFIED, CONTRACTOR WILL COMMUNICATE DIRECTLY WITH HAZARDOUS MATERIAL PROFESSIONAL FOR THE PERFORMANCE OF ANY WORK ON OR ADJACENT TO SAID MATERIALS. IF UNIDENTIFIED MATERIALS OF CONCERN ARE ENCOUNTERED WHILE UNDERTAKING THE WORK SHOWN HEREON, CONTRACTOR SHALL IMMEDIATELY NOTIFY ENGINEER AND OWNER, AND SHALL OBTAIN DIRECTION FROM THE HAZARDOUS MATERIAL CONSULTANT PRIOR TO THE CONTINUATION OF WORK INVOLVING SUSPECTED MATERIAL.

UDIG·NY SAFE DIGGING STARTS HERE
CALL 811

UNAUTHORIZED ADDITION OR ALTERATION OF THIS PLAN IS A VIOLATION OF SECTION 7209(2) OF THE NEW YORK STATE EDUCATION LAW.

ALL PRODUCTION & INTELLECTUAL PROPERTY RIGHT RESERVED ©

CAESARS LANE WWTP EXPANSION PROJECT: PHASE 1

145 CAESARS LN.
NEW WINDSOR, NY 12553

FOR TOWN OF NEW WINDSOR
555 UNION AVE.
NEW WINDSOR, NY 12553

OVERALL EXISTING PLANT SITE PLAN

REVISIONS

NO.	DESCRIPTION	DATE

ISSUED DATE:	21 NOV, 2024
DESIGN BY:	MJS
DRAWN BY:	HPHJr
CHECKED BY:	MWW
REVIEWED BY:	MJL

SHEET NO.

C-101

PROJECT # 18-732 PHASE # 1

F:\2018\18-732 Caesar Lane WWTP Improvements\Expansion Phase I - CSR\5Civil\Dwg\Site Plans - Civil\PHASE I SITE PLAN AND DETAILS.dwg, C-101, 11/21/2024 1:02:31 PM

GENERAL NOTES:

1. SURVEY DATA OBTAINED FROM A PLAN ENTITLED "TOWN OF NEW WINDSOR WASTEWATER TREATMENT PLANT" PREPARED BY C.T. MALE ASSOCIATES AND DATED LATEST REVISION 7/23/19.

2. CONTRACTOR SHALL OBTAIN ALL SUPPLEMENTAL EXISTING CONDITIONS INFORMATION AS AVAILABLE FROM THE TOWN PERSONNEL AND VIA SITE EXPLORATION AS NEEDED DURING THE WORK.

3. WHERE SHOWN, THE LOCATION OF THE EXISTING UNDERGROUND UTILITIES ARE SHOWN IN AN APPROXIMATE WAY ONLY. THE CONTRACTOR SHALL DETERMINE THE EXACT LOCATION OF ALL EXISTING UTILITIES BEFORE COMMENCING WORK. IT SHALL BE THE CONTRACTOR'S RESPONSIBILITY TO CONTACT AND COORDINATE HIS WORK WITH ALL UTILITY COMPANIES. THE CONTRACTOR AGREES TO BE FULLY RESPONSIBLE FOR ANY DAMAGES WHICH MIGHT BE OCCASIONED BY HIS/HER FAILURE TO EXACTLY LOCATE AND PRESERVE ANY AND ALL UNDERGROUND UTILITIES.

4. ALL DISTURBED OR DAMAGED AREAS SHALL BE RESTORED AND/OR REPLACED TO MATCH OR EXCEED PRE-EXISTING CONDITIONS, AND COMPLY WITH ANY APPLICABLE CONTRACT DETAILS.

5. ANY MANHOLE OR VALVE ENCOUNTERED BY THE CONTRACTOR WITHIN THE CONTRACT LIMITS AND NOT SHOWN SHALL BE ADJUSTED TO THE NEW GRADE. THIS WORK SHALL BE DEEMED INCLUDED UNDER THE PROPOSAL PAYMENT ITEMS. NO SEPARATE PAYMENT SHALL BE MADE FOR THIS WORK.

6. THE CONTRACTOR SHALL BE RESPONSIBLE FOR ALL CONSTRUCTION LAYOUT. PRIOR TO CONSTRUCTION, THE CONTRACTOR SHALL REVIEW LAYOUT WITH THE ENGINEER/OWNER IN THE FIELD AFTER THE LAYOUT IS COMPLETED BY THE CONTRACTOR.

7. THE CONTRACTOR SHALL INCLUDE IN THEIR BID COSTS FOR DISCONNECTING, MODIFICATION AND RECONNECTION TO EXISTING PITS AND STRUCTURES AS NEEDED TO PERFORM WORK. SUCH WORK IS SPECIFICALLY CALLED OUT IN SOME AREAS; HOWEVER, OTHER LOCATIONS OF SUCH WORK WHICH IS NECESSARY TO ACCOMPLISH OTHER WORK OR MODIFICATIONS CALLED FOR SHALL BE DEEMED INCLUDED IN THE LUMP SUM BID, EVEN IF NOT SPECIFICALLY CALLED OUT.

8. THE CONTRACTOR SHALL MAINTAIN ACCESS THROUGH THE SEWAGE TREATMENT FACILITY DURING CONSTRUCTION ACTIVITIES.

9. ALL ITEMS NOTED AS "T.B.R." SHALL BE COMPLETELY REMOVED AND PROPERLY DISPOSED OF BY THE CONTRACTOR.

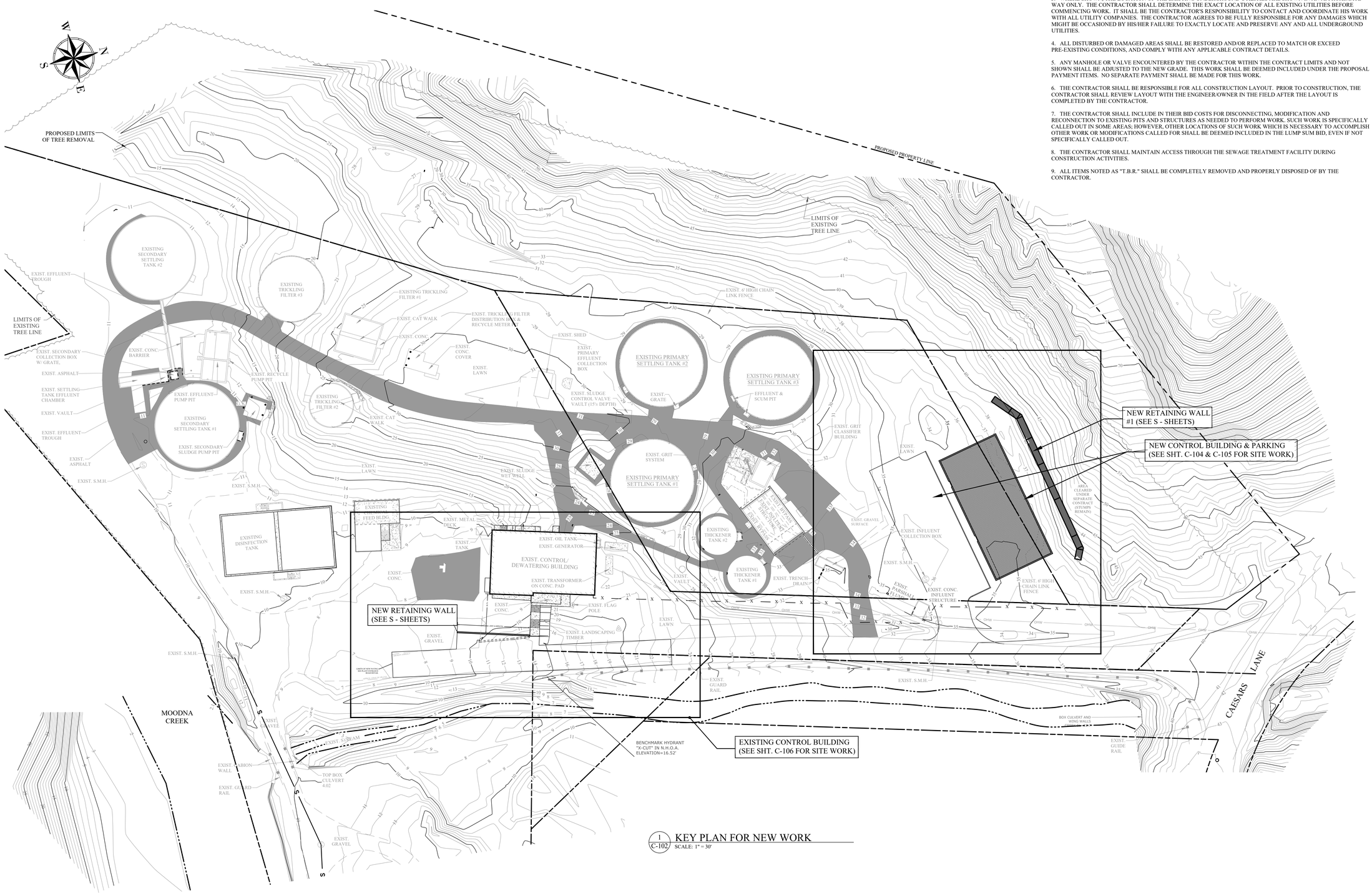

1 / C-102 KEY PLAN FOR NEW WORK
SCALE: 1" = 30'

GRAPHIC SCALE
30 0 15 30 60 120
1 inch = 30 feet

MHE ENGINEERING
33 Airport Center Drive, Suite 202, New Windsor, NY 12553, (845) 567-3100
111 Wheatfield Drive, Suite 1, Milford, PA 18337, (570) 296-2765

BID SET

HAZARDOUS MATERIAL NOTE:

THE SERVICES PROVIDED BY MHE, INCLUDING ALL WORK DEPICTED ON MHE PLANS, DO NOT INCLUDE SERVICES RELATED TO THE IDENTIFICATION, CONTROLS OR HANDLING OF HAZARDOUS MATERIALS, INCLUDING SUCH MATERIALS AS ASBESTOS AND LEAD PAINT. ALL TESTING, IDENTIFICATION, ABATEMENT, CONTROLS, AND HANDLING OF HAZARDOUS MATERIALS SHALL BE UNDERTAKEN BY A HAZARDOUS MATERIAL CONSULTANT AND CERTIFIED PROFESSIONALS. IF SUCH MATERIALS HAVE BEEN IDENTIFIED, CONTRACTOR WILL COMMUNICATE DIRECTLY WITH HAZARDOUS MATERIAL PROFESSIONAL FOR THE PERFORMANCE OF ANY WORK ON OR ADJACENT TO SAID MATERIALS. IF UNIDENTIFIED MATERIALS OF CONCERN ARE ENCOUNTERED WHILE UNDERTAKING THE WORK SHOWN HEREON, CONTRACTOR SHALL IMMEDIATELY NOTIFY ENGINEER AND OWNER, AND SHALL OBTAIN DIRECTION FROM THE HAZARDOUS MATERIAL CONSULTANT PRIOR TO THE CONTINUATION OF WORK INVOLVING SUSPECTED MATERIAL.

UDIG·NY SAFE DIGGING STARTS HERE CALL 811

UNAUTHORIZED ADDITION OR ALTERATION OF THIS PLAN IS A VIOLATION OF SECTION 7209(2) OF THE NEW YORK STATE EDUCATION LAW.

ALL PRODUCTION & INTELLECTUAL PROPERTY RIGHT RESERVED ©

CAESARS LANE WWTP EXPANSION PROJECT: PHASE 1

145 CAESARS LN.
NEW WINDSOR, NY 12553

FOR TOWN OF NEW WINDSOR
555 UNION AVE.
NEW WINDSOR, NY 12553

KEY PLAN FOR NEW WORK

REVISIONS

NO.	DESCRIPTION	DATE

ISSUED DATE:	21 NOV, 2024
DESIGN BY:	MJS
DRAWN BY:	HPJJr
CHECKED BY:	MWW
REVIEWED BY:	MJL

SHEET NO.

C-102

PROJECT # 18-732 PHASE # 1

F:\2018\18-732 Caesar Lane WWTP Improvements\Expansion Phase I - CSR\5Civil\Dwg\Site Plans - Civil\PHASE I SITE PLAN AND DETAILS.dwg, C-102, 11/21/2024 1:02:23 PM

EXIST. CB
GRATE ELEV. 28.33
18" INV. OUT 26.53

EXIST. 18"Ø CMP

EXIST. CB
GRATE ELEV. 29.03
18" INV. IN 26.23
15" INV. IN 26.78
24" INV. OUT 26.03

EXIST. 15"Ø CMP

EXIST. CB
GRATE ELEV. 32.02
12" INV. IN 28.14
15" INV. OUT 27.73

EXIST. GRAVEL
SURFACE

EXIST. 12"Ø CMP

EXIST. CONCRETE
HEADWALL (TO BE
REMOVED)

EXIST.
LAWN

EXIST. 24"Ø CMP
(TO BE REMOVED)

EXIST. 24"Ø CIP SEWER

EXIST. CB
RIM. 36.35
INV. IN/OUT 26.4

EXIST. 30"Ø HDPE
(TO BE REMOVED)

EXIST. CHAIN
LINK FENCE, T.B.R.

6'Ø STORM MANHOLE, HEAVY
DUTY SOLID CAST IRON FRAME
& GRATE W/ SOLID TOP, RIM. 32.4,
INV. IN/OUT 26.0

EXIST. S.M.H.
RIM ELEV. 36.14
INV. IN 31.96
INV. OUT 32.08
SUMP 31.94

EXIST.
PARSHALL
FLUME

EXIST. CONC.
INFLUENT
STRUCTURE

EXIST.
TOP 30"Ø
EL. 33.93

EXIST.
30"Ø HDPE

EXIST. 24"Ø SEWER

EXIST. 30"Ø HDPE

EXIST. 30"Ø SEWER

EXIST. 30"Ø PVC
SEWER PIPE

EXIST. 24"Ø
SEWER PIPE

EXIST. S.M.H.
RIM. 37.74
INV. 31.47

EXIST. SAN.
MANHOLE

EXIST. 30"Ø
SEWER PIPE

EXIST. 30"Ø
SEWER PIPE

EXIST. CB
RIM. 38.5
INV. IN/OUT 35.0

EXIST. 21"Ø
TRANSITE
SEWER PIPE

EXIST. S.M.H.
RIM. 40.98

REPUTED 8"Ø AC/ TRANSITE
WATERMAIN (ABANDONED)

EXIST. 30"Ø HDPE

EXIST. 8"Ø AC/TRANSITE WATERMAIN

EXIST. 18"Ø
HDPE INV. 33.5'

EXIST. 30"Ø HDPE

EXIST. S.M.H.
RIM ELEV. 37.47
INV. IN 31.47
INV. OUT 31.47

EXIST. 24"Ø HDPE

EXIST. 21"Ø
TRANSITE
SEWER PIPE

EXIST. S.M.H.
RIM. 42.08

EXIST. 30"Ø HDPE
INV. OUT 25.80

REPUTED 21"Ø AC/TRANSITE
PIPE ENCASED IN CONCRETE
(ABANDONED)

REPUTED 8"Ø AC/ TRANSITE
WATERMAIN (ABANDONED)

EXIST. S.M.H.
RIM ELEV. 35.43
TRU/SUMP 31.03

REPUTED 8"Ø AC/ TRANSITE
ENCASED WATERMAIN
(ABANDONED)

EXIST. 30"Ø HDPE
INV. OUT 25.5'

EXIST. GUARD
RAIL

EXIST. DMH
RIM. 33.8
INV. IN/OUT 26.0
18" INV. IN 30.0

EXIST. 24"Ø HDPE

AREA CLEARED UNDER SEPARATE CONTRACT
(STUMPS REMAIN)

GRAPHIC SCALE

10 0 5 10 20 40

1 inch = 10 feet

1 C-103 NEW WORK AREA DEMOLITION PLAN
SCALE: 1" = 10'

MHE ENGINEERING

33 Airport Center Drive, Suite 202
New Windsor, NY 12553
(845) 567-3100

111 Wheatfield Drive, Suite 1
Milford, PA 18337
(570) 296-2765

BID SET

HAZARDOUS MATERIAL NOTE:

THE SERVICES PROVIDED BY MHE, INCLUDING ALL WORK DEPICTED ON MHE PLANS, DO NOT INCLUDE SERVICES RELATED TO THE IDENTIFICATION, CONTROLS OR HANDLING OF HAZARDOUS MATERIALS, INCLUDING SUCH MATERIALS AS ASBESTOS AND LEAD PAINT. ALL TESTING, IDENTIFICATION, ABATEMENT, CONTROLS, AND HANDLING OF HAZARDOUS MATERIALS SHALL BE UNDERTAKEN BY A HAZARDOUS MATERIAL CONSULTANT AND CERTIFIED PROFESSIONALS. IF SUCH MATERIALS HAVE BEEN IDENTIFIED, CONTRACTOR WILL COMMUNICATE DIRECTLY WITH HAZARDOUS MATERIAL PROFESSIONAL FOR THE PERFORMANCE OF ANY WORK ON OR ADJACENT TO SAID MATERIALS. IF UNIDENTIFIED MATERIALS OF CONCERN ARE ENCOUNTERED WHILE UNDERTAKING THE WORK SHOWN HEREON, CONTRACTOR SHALL IMMEDIATELY NOTIFY ENGINEER AND OWNER, AND SHALL OBTAIN DIRECTION FROM THE HAZARDOUS MATERIAL CONSULTANT PRIOR TO THE CONTINUATION OF WORK INVOLVING SUSPECTED MATERIAL.

UDIG·NY
SAFE DIGGING STARTS HERE
CALL 811

UNAUTHORIZED ADDITION OR ALTERATION OF THIS PLAN IS A VIOLATION OF SECTION 7209(2) OF THE NEW YORK STATE EDUCATION LAW.

ALL PRODUCTION & INTELLECTUAL PROPERTY RIGHT RESERVED ©

CAESARS LANE WWTP EXPANSION PROJECT: PHASE 1

145 CAESARS LN.
NEW WINDSOR, NY 12553

FOR TOWN OF NEW WINDSOR
555 UNION AVE.
NEW WINDSOR, NY 12553

NEW WORK AREA DEMOLITION PLAN

REVISIONS

NO.	DESCRIPTION	DATE

ISSUED DATE:	21 NOV, 2024
DESIGN BY:	MJS
DRAWN BY:	HPBJr
CHECKED BY:	MWW
REVIEWED BY:	MJL

SHEET NO.

C-103

PROJECT # 18-732 PHASE # 1

P:\2018\18-732 Caesar Lane WWTP Improvements\Expansion Phase 1 - CDBG\Drafting\Site Plans - Civil\PHASE1 SITE PLAN AND DETAILS.dwg, C-103, 11/27/2024 1:02:33 PM

MATCH LINE TO SHEET C-105

INV. IN 32.5

END OF PROPOSED 6' HIGH CHAIN LINK FENCE

15"Ø HDPE

18"Ø HDPE

INV. IN 35.0

TW=39.0
BW=38.0

FUTURE 6"Ø SLOTTED PVC (N.I.C.)

PROPOSED CB
RIM. 36.0
(15") INV. IN 31.0
(18") INV. IN 32.5
(24") INV. OUT 29.5

24"Ø HDPE

PROP. OUTLET STRUCTURE
RIM. 35.0, (24") INV. IN 29.0,
(30") INV. OUT 28.0,
4"Ø ORIFICE @ 34.0,
PROVIDE KNOCKOUT FOR
FUTURE 6"Ø PVC @ 30.0

EXIST. 18"Ø CMP

PROPOSED 8"Ø DI WATER MAIN (PHASE 2)

EXIST. CB
GRATE ELEV. 28.33
18" INV. OUT 26.53

EXIST. CB
GRATE ELEV. 29.03
18" INV. IN 26.23
15" INV. IN 26.78
24" INV. OUT 26.03

ROOF DOWNSPOUT
TO SPLASHBLOCK

TW=41.25
BW=36.0

ROOF DOWNSPOUT
TO SPLASHBLOCK

TC=36.7
BC=36.2

EXIST. 15"Ø CMP

LIMIT OF PROPOSED
PHASE 1 PAVEMENT

CONC. CURB

6' CONC. SIDEWALK

PROPOSED 8" WV & TEMP.
BLIND FLANGE FOR PHASE
2 CONSTRUCTION

TC=37.5
BC=37.0

PROP. PAVED
PARKING AREA

PROP. PARKING
SPACE STRIPING

HVAC PADS,
SEE M-SHEETS

PROPOSED MODULAR BLOCK
RETAINING WALL #1 (SEE
STRUCTURAL PLANS FOR DETAILS)

PROPOSED WATER
MAIN CROSSING

PROPOSED 8"Ø DI WATER MAIN (PHASE 1)

EXIST. 24"Ø DIP SEWER

30"Ø HDPE

PROPOSED CONTROL
BUILDING
(E.F. EL. 37.6)

EXIST. CB
GRATE ELEV. 32.02
12" INV. IN 28.14
15" INV. OUT 27.73

EXIST. GRAVEL
SURFACE

EXIST. 12"Ø CMP

PROPOSED
C.O.T.G.

ROOF DOWNSPOUT
TO CONNECT TO NEW
30"Ø HDPE STORMWATER

PROPOSED PAVED
ACCESSIBLE PARKING
(SEE DETAIL SHEET C-202)

TC/BC=37.1

TC=37.5
BC=37.1

AREA CLEARED UNDER SEPARATE CONTRACT
(STUMPS REMAIN)

TW=45.75
BW=36.0

TW=40.0
BW=39.0

PROPOSED 4"Ø SDR35 PVC
SEWER SERVICE CONNECTION

PROPOSED
C.O.T.G.

PROPOSED 2"Ø TYPE "K"
COPPER WATER SERVICE

PHASE 2 (N.I.C.)

CURB STOP W/
PAVEMENT BOX

PROPOSED 8"Ø
(11.25° + 22.5°)
HORIZ. BENDS

PROPOSED
INV. IN 27.0

TC=36.85
BC=36.35

ROOF DOWNSPOUT
TO CATCH BASIN

CONCRETE
ENCASEMENT

PROPOSED HYDRANT
ASSEMBLY

EXIST. CB
RIM. 36.35
INV. IN/OUT 26.4

PROPOSED 1,000 GAL. PROPANE
TANK ON 8'x18' CONC. PAD (LOCATION
TO BE VERIFIED BY GAS SUPPLIER)

END OF PROPOSED 6' HIGH
CHAIN LINK FENCE

6"Ø STORM MANHOLE, HEAVY
DUTY SOLID CAST IRON FRAME
& GRATE W/ SOLID TOP, RIM. 32.4,
INV. IN/OUT 26.0

EXIST. S.M.H.
RIM ELEV. 36.14
INV. IN 31.96
INV. OUT 32.08
SUMP 31.94

EXIST. 18"Ø CIP SEWER

EXIST.
TOP 30"Ø
EL.= 33.93

EXIST. CONC.
INFLUENT
STRUCTURE

EXIST.
PARSHALL
FLUME

6"Ø D.I.

END CURB

PHASE 2 (N.I.C.)

EXIST. 30"Ø HDPE

EXIST. 30"Ø SEWER

EXIST. 24"Ø SEWER

R=10'

R=25'

EXIST. SAN.
MANHOLE

EXIST. 30"Ø
SEWER PIPE

EXIST. CB
RIM. 38.5
INV. IN/OUT 35.0

EXIST. S.M.H.
RIM. 37.74
INV. 31.47

EXIST. 30"Ø PVC
SEWER PIPE

EXIST. 24"Ø
SEWER PIPE

EXIST. 21"Ø
TRANSITE
SEWER PIPE

EXIST. S.M.H.
RIM ELEV. 37.47
INV. IN 31.47
INV. OUT 31.47

EXIST. 18"Ø
HDPE INV. 33.5'

EXIST. 24"Ø HDPE

REPUTED 8"Ø AC/ TRANSITE
WATERMAIN (ABANDONED)

EXIST. 30"Ø HDPE

(*) PROPOSED 8x8
WET TAP W/
THRUST BLOCK

* REFER TO QUEST
TECHNICAL
SPECIFICATIONS

EXIST. 8"Ø AC/TRANSITE WATERMAIN

0+00

EXIST. 30"Ø HDPE
INV. OUT 25.80

REPUTED 21"Ø AC/TRANSITE
PIPE ENCASED IN CONCRETE
(ABANDONED)

REPUTED 8"Ø AC/ TRANSITE
WATERMAIN (ABANDONED)

EXIST. S.M.H.
RIM ELEV. 35.43
TRU/SUMP 31.03

REPUTED 8"Ø AC/ TRANSITE
ENCASED WATERMAIN
(ABANDONED)

EXIST. 30"Ø HDPE
INV. OUT 25.5'

END OF PROPOSED 6' HIGH
CHAIN LINK FENCE

EXIST. DMH
RIM. 33.8
INV. IN/OUT 26.0
18" INV. IN 30.0

EXIST. 24"Ø HDPE
INV. OUT 34.2'

LANE

EXIST. S.M.H.
RIM. 42.08

EXIST. 21"Ø
TRANSITE
SEWER PIPE

GRAPHIC SCALE

10 0 5 10 20 40

1 inch = 10 feet

NOTES:
1. SURVEY AND TOPOGRAPHY SECURED FROM A PLAN PREPARED BY C.T. MALE ASSOCIATES ENTITLED "TOWN OF NEW WINDSOR WASTE WATER TREATMENT PLANT", LATEST REVISION 3/8/23.
2. THE ROAD GRADES SHOWN ON THIS PLAN REFLECT THE TOP OF FINISH TOP COURSE GRADE. HOWEVER THIS PROJECT INCLUDES PREPARATION OF SUBGRADE, PLACEMENT OF AGGREGATE AND ASPHALT BINDER COURSE. THE PLACEMENT OF ASPHALT TOP COURSE IS NOT INCLUDED IN THIS PROJECT.
3. EXISTING WATER LINE SHOWN SHALL BE CONSIDERED APPROXIMATE AND FIELD VERIFIED PRIOR TO THE REMOVAL OR INSTALLATION OF ANY STORM DRAINAGE PIPES OR STRUCTURES.
4. THE CONTRACTOR IS TO ALLOW OWNERS ACCESS TO OPERATE THE WWTP DURING CONSTRUCTION.

1 / C-104 NEW CONTROL BUILDING SITE PLAN
SCALE: 1" = 10'

MHE ENGINEERING
33 Airport Center Drive, Suite 202
New Windsor, NY 12553
(845) 567-3100
111 Wheatfield Drive, Suite 1
Milford, PA 18337
(570) 296-2765

BID SET

HAZARDOUS MATERIAL NOTE:
THE SERVICES PROVIDED BY MHE, INCLUDING ALL WORK DEPICTED ON MHE PLANS, DO NOT INCLUDE SERVICES RELATED TO THE IDENTIFICATION, CONTROLS OR HANDLING OF HAZARDOUS MATERIALS, INCLUDING SUCH MATERIALS AS ASBESTOS AND LEAD PAINT. ALL TESTING, IDENTIFICATION, ABATEMENT, CONTROLS, AND HANDLING OF HAZARDOUS MATERIALS SHALL BE UNDERTAKEN BY A HAZARDOUS MATERIAL CONSULTANT AND CERTIFIED PROFESSIONALS. IF SUCH MATERIALS HAVE BEEN IDENTIFIED, CONTRACTOR WILL COMMUNICATE DIRECTLY WITH HAZARDOUS MATERIAL PROFESSIONAL FOR THE PERFORMANCE OF ANY WORK ON OR ADJACENT TO SAID MATERIALS. IF UNIDENTIFIED MATERIALS OF CONCERN ARE ENCOUNTERED WHILE UNDERTAKING THE WORK SHOWN HEREON, CONTRACTOR SHALL IMMEDIATELY NOTIFY ENGINEER AND OWNER, AND SHALL OBTAIN DIRECTION FROM THE HAZARDOUS MATERIAL CONSULTANT PRIOR TO THE CONTINUATION OF WORK INVOLVING SUSPECTED MATERIAL.

UDIG·NY SAFE DIGGING STARTS HERE
CALL 811

UNAUTHORIZED ADDITION OR ALTERATION OF THIS PLAN IS A VIOLATION OF SECTION 7209(2) OF THE NEW YORK STATE EDUCATION LAW.

ALL PRODUCTION & INTELLECTUAL PROPERTY RIGHT RESERVED ©

CAESARS LANE WWTP EXPANSION PROJECT: PHASE 1

145 CAESARS LN.
NEW WINDSOR, NY 12553

FOR TOWN OF NEW WINDSOR
555 UNION AVE.
NEW WINDSOR, NY 12553

NEW CONTROL BUILDING SITE PLAN SHEET 1 OF 2

REVISIONS

NO.	DESCRIPTION	DATE

ISSUED DATE:	21 NOV, 2024
DESIGN BY:	MJS
DRAWN BY:	HPBJr
CHECKED BY:	MWW
REVIEWED BY:	MJL

SHEET NO.

C-104

PROJECT # 18-732 PHASE # 1

F:\2018\18-732 Caesar Lane WWTP Improvements\Expansion Phase 1 - CDBD\Drafting\Site Plans - Civil\PHASE1 SITE PLAN AND DETAILS.dwg, C-104, 11/21/2024 1:03:51 PM

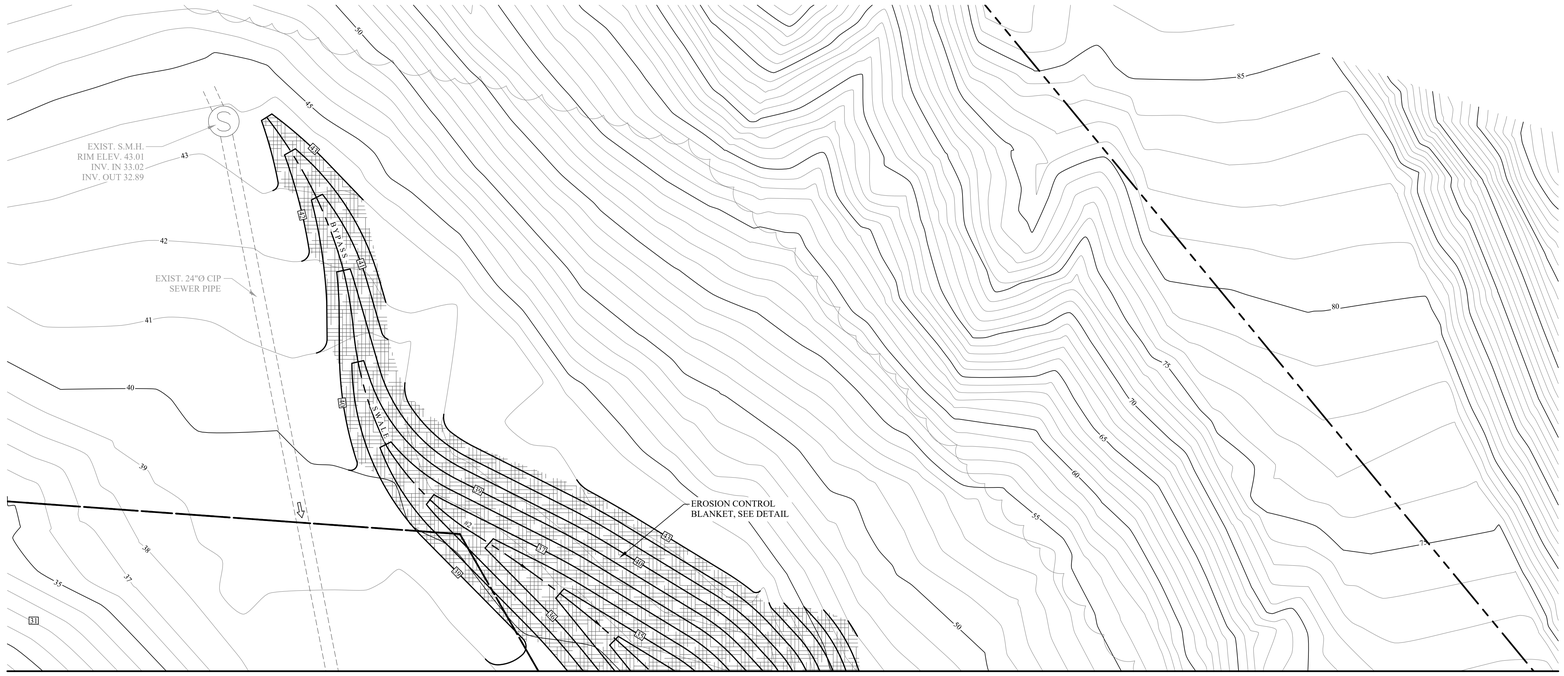

1 C-105 NEW CONTROL BUILDING SITE PLAN
SCALE: 1" = 10'

GRAPHIC SCALE
10 0 5 10 20 40
1 inch = 10 feet

NOTES:
1. SURVEY AND TOPOGRAPHY SECURED FROM A PLAN PREPARED BY C.T. MALE ASSOCIATES ENTITLED "TOWN OF NEW WINDSOR WASTE WATER TREATMENT PLANT", LATEST REVISION 3/8/23.
2. THE ROAD GRADES SHOWN ON THIS PLAN REFLECT THE TOP OF FINISH TOP COURSE GRADE. HOWEVER THIS PROJECT INCLUDES PREPARATION OF SUBGRADE, PLACEMENT OF AGGREGATE AND ASPHALT BINDER COURSE. THE PLACEMENT OF ASPHALT TOP COURSE IS NOT INCLUDED IN THIS PROJECT.
3. EXISTING WATER LINE SHOWN SHALL BE CONSIDERED APPROXIMATE AND FIELD VERIFIED PRIOR TO THE REMOVAL OR INSTALLATION OF ANY STORM DRAINAGE PIPES OR STRUCTURES.
4. THE CONTRACTOR IS TO ALLOW OWNERS ACCESS TO OPERATE THE WWTP DURING CONSTRUCTION.

MHE ENGINEERING
33 Airport Center Drive, Suite 202
New Windsor, NY 12553
(845) 567-3100
111 Wheatfield Drive, Suite 1
Milford, PA 18337
(570) 296-2765

BID SET

HAZARDOUS MATERIAL NOTE:
THE SERVICES PROVIDED BY MHE, INCLUDING ALL WORK DEPICTED ON MHE PLANS, DO NOT INCLUDE SERVICES RELATED TO THE IDENTIFICATION, CONTROLS OR HANDLING OF HAZARDOUS MATERIALS, INCLUDING SUCH MATERIALS AS ASBESTOS AND LEAD PAINT. ALL TESTING, IDENTIFICATION, ABATEMENT, CONTROLS, AND HANDLING OF HAZARDOUS MATERIALS SHALL BE UNDERTAKEN BY A HAZARDOUS MATERIAL CONSULTANT AND CERTIFIED PROFESSIONALS. IF SUCH MATERIALS HAVE BEEN IDENTIFIED, CONTRACTOR WILL COMMUNICATE DIRECTLY WITH HAZARDOUS MATERIAL PROFESSIONAL FOR THE PERFORMANCE OF ANY WORK ON OR ADJACENT TO SAID MATERIALS. IF UNIDENTIFIED MATERIALS OF CONCERN ARE ENCOUNTERED WHILE UNDERTAKING THE WORK SHOWN HEREON, CONTRACTOR SHALL IMMEDIATELY NOTIFY ENGINEER AND OWNER, AND SHALL OBTAIN DIRECTION FROM THE HAZARDOUS MATERIAL CONSULTANT PRIOR TO THE CONTINUATION OF WORK INVOLVING SUSPECTED MATERIAL.

UDIG·NY SAFE DIGGING STARTS HERE
CALL 811

UNAUTHORIZED ADDITION OR ALTERATION OF THIS PLAN IS A VIOLATION OF SECTION 7209(2) OF THE NEW YORK STATE EDUCATION LAW.

ALL PRODUCTION & INTELLECTUAL PROPERTY RIGHT RESERVED ©

CAESARS LANE WWTP EXPANSION PROJECT: PHASE 1
145 CAESARS LN.
NEW WINDSOR, NY 12553
FOR TOWN OF NEW WINDSOR
555 UNION AVE.
NEW WINDSOR, NY 12553

NEW CONTROL BUILDING SITE PLAN
SHEET 2 OF 2

REVISIONS

NO.	DESCRIPTION	DATE

ISSUED DATE:	21 NOV, 2024
DESIGN BY:	MJS
DRAWN BY:	HPB/Jr
CHECKED BY:	MWW
REVIEWED BY:	MJL

SHEET NO.
C-105

PROJECT # 18-732 PHASE # 1

F:\2018\18-732 Caesar Lane WWTP Improvements\Expansion Phase I - CDS\D\Drafting\Site Plans - Civil\PHASE I SITE PLAN AND DETAILS.dwg, C-105, 11/21/2024 1:03:14 PM

MATCH LINE TO SHEET C-105

INLET PROTECTION, SEE DETAIL

EXIST. CB
GRATE ELEV. 28.33
18" INV. OUT 26.53

PROPOSED 8"Ø D.I. WATER MAIN (PHASE 2)

EXIST. 18"Ø CMP

COMPOST FILTER SOCK (TYP.), SEE DETAIL

EXIST. CB
GRATE ELEV. 29.03
18" INV. IN 26.23
15" INV. IN 26.78
24" INV. OUT 26.03

INLET PROTECTION, SEE DETAIL

EXIST. 15"Ø CMP

CONCRETE WASHOUT, SEE DETAIL

LIMIT OF PROPOSED PHASE 1 PAVEMENT

PROPOSED 8" WV & TEMP. BLIND FLANGE FOR PHASE 2 CONSTRUCTION

EXIST. CB
GRATE ELEV. 32.02
12" INV. IN 28.14
15" INV. OUT 27.73

INLET PROTECTION, SEE DETAIL

EXIST. GRAVEL SURFACE

EXIST. 12"Ø CMP

PROPOSED 4"Ø SDR35 PVC SEWER SERVICE CONNECTION

PROPOSED 2"Ø TYPE "K" COPPER WATER SERVICE

PROPOSED C.O.T.G.

TOPSOIL STOCKPILE

6'Ø STORM MANHOLE, HEAVY DUTY SOLID CAST IRON FRAME & GRATE W/ SOLID TOP, RIM. 32.4, INV. IN/OUT 26.0

EXIST. S.M.H.
RIM ELEV. 36.14
INV. IN 31.96
INV. OUT 32.08
SUMP 31.94

EXIST. PARSHALL FLUME

EXIST. CONC. INFLUENT STRUCTURE

EXIST. 30"Ø HDPE

EXIST. 15"Ø CIP SEWER

STABILIZED CONSTRUCTION ENTRANCE, SEE DETAIL

REPUTED 8"Ø AC/ TRANSITE WATERMAIN (ABANDONED)

EXIST. 30"Ø HDPE
INV. OUT 25.80

REPUTED 21"Ø AC/TRANSITE PIPE ENCASED IN CONCRETE (ABANDONED)

REPUTED 8"Ø AC/ TRANSITE WATERMAIN (ABANDONED)

EXIST. S.M.H.
RIM ELEV. 35.43
TRU/SUMP 31.03

REPUTED 8"Ø AC/ TRANSITE ENCASED WATERMAIN (ABANDONED)

EXIST. 30"Ø HDPE
INV. OUT 25.5'

TW=39.0
BW=38.0

EROSION CONTROL BLANKET, SEE DETAIL

TW=41.25
BW=36.0

TC=36.7
BC=36.2

CONC. CURB

6' CONC. SIDEWALK

TC=37.5
BC=37.0

PROP. PAVED PARKING AREA

PROP. PARKING SPACE STRIPING

PROPOSED WATER MAIN CROSSING

PROPOSED 8"Ø D.I. WATER MAIN (PHASE 1)

EXIST. 24"Ø CIP SEWER

PROPOSED CONTROL BUILDING (E.F. EL. 37.67)

HVAC PADS, SEE M-SHEETS

TC=37.5
BC=37.1

PROPOSED PAVED ACCESSIBLE PARKING (SEE DETAIL SHEET C-202)

TC/BC=37.1

TC=37.5
BC=37.0

INLET PROTECTION, SEE DETAIL

EXIST. CB
RIM. 36.35
INV. IN/OUT 26.4

CURB STOP W/ PAVEMENT BOX

PROPOSED 8"Ø (11.25° + 22.5°) HORIZ. BENDS

TC=36.85
BC=36.35

CONCRETE ENCASEMENT

6"Ø D.I.

END CURB

PROPOSED HYDRANT ASSEMBLY

PROPOSED WATER MAIN CROSSING

(*) PROPOSED 8x8 WET TAP W/ THRUST BLOCK

* REFER TO QUEST TECHNICAL SPECIFICATIONS

EXIST. 8"Ø AC/TRANSITE WATERMAIN

0+00

EXIST. 24"Ø SEWER

EXIST. 30"Ø SEWER

EXIST. 30"Ø HDPE

EROSION CONTROL BLANKET, SEE DETAIL

PROPOSED MODULAR BLOCK RETAINING WALL #1 (SEE STRUCTURAL PLANS FOR DETAILS)

AREA CLEARED UNDER SEPARATE CONTRACT (STUMPS REMAIN)

TW=45.75
BW=36.0

EROSION CONTROL BLANKET, SEE DETAIL

TW=40.0
BW=39.0

PROPOSED 1,000 GAL. PROPANE TANK ON 8'x18' CONC. PAD (LOCATION TO BE VERIFIED BY GAS SUPPLIER)

COMPOST FILTER SOCK (TYP.), SEE DETAIL

EXIST. SAN. MANHOLE

EXIST. 30"Ø SEWER PIPE

EXIST. CB
RIM. 38.5
INV. IN/OUT 35.0

EXIST. S.M.H.
RIM. 37.74
INV. 31.47

EXIST. 30"Ø PVC SEWER PIPE

EXIST. 24"Ø SEWER PIPE

U.P.

EXIST. 21"Ø TRANSITE SEWER PIPE

EXIST. S.M.H.
RIM ELEV. 37.47
INV. IN 31.47
INV. OUT 31.47

EXIST. 18"Ø HDPE INV. 33.5'

EXIST. DMH
RIM. 33.8
INV. IN/OUT 26.0
18" INV. IN 30.0

EXIST. 24"Ø HDPE
INV. OUT 34.2'

EXIST. 21"Ø TRANSITE SEWER PIPE

EXIST. S.M.H.
RIM. 42.08

LANE

GRAPHIC SCALE

10 0 5 10 20 40

1 inch = 10 feet

1 / C-106 NEW CONTROL BUILDING SITE PLAN

SCALE: 1" = 10'

MHE ENGINEERING

33 Airport Center Drive, Suite 202
New Windsor, NY 12553
(845) 567-3100

111 Wheatfield Drive, Suite 1
Milford, PA 18337
(570) 296-2765

BID SET

HAZARDOUS MATERIAL NOTE:

THE SERVICES PROVIDED BY MHE, INCLUDING ALL WORK DEPICTED ON MHE PLANS, DO NOT INCLUDE SERVICES RELATED TO THE IDENTIFICATION, CONTROLS OR HANDLING OF HAZARDOUS MATERIALS, INCLUDING SUCH MATERIALS AS ASBESTOS AND LEAD PAINT. ALL TESTING, IDENTIFICATION, ABATEMENT, CONTROLS, AND HANDLING OF HAZARDOUS MATERIALS SHALL BE UNDERTAKEN BY A HAZARDOUS MATERIAL CONSULTANT AND CERTIFIED PROFESSIONALS. IF SUCH MATERIALS HAVE BEEN IDENTIFIED, CONTRACTOR WILL COMMUNICATE DIRECTLY WITH HAZARDOUS MATERIAL PROFESSIONAL FOR THE PERFORMANCE OF ANY WORK ON OR ADJACENT TO SAID MATERIALS. IF UNIDENTIFIED MATERIALS OF CONCERN ARE ENCOUNTERED WHILE UNDERTAKING THE WORK SHOWN HEREON, CONTRACTOR SHALL IMMEDIATELY NOTIFY ENGINEER AND OWNER, AND SHALL OBTAIN DIRECTION FROM THE HAZARDOUS MATERIAL CONSULTANT PRIOR TO THE CONTINUATION OF WORK INVOLVING SUSPECTED MATERIAL.

UDIG·NY SAFE DIGGING STARTS HERE
CALL 811

UNAUTHORIZED ADDITION OR ALTERATION OF THIS PLAN IS A VIOLATION OF SECTION 7209(2) OF THE NEW YORK STATE EDUCATION LAW.

ALL PRODUCTION & INTELLECTUAL PROPERTY RIGHT RESERVED ©

CAESARS LANE WWTP EXPANSION PROJECT: PHASE 1
145 CAESARS LN.
NEW WINDSOR, NY 12553
FOR TOWN OF NEW WINDSOR
555 UNION AVE.
NEW WINDSOR, NY 12553

EROSION & SEDIMENT CONTROL PLAN

REVISIONS

NO.	DESCRIPTION	DATE

ISSUED DATE:	21 NOV, 2024
DESIGN BY:	MJS
DRAWN BY:	HPBJr
CHECKED BY:	MWW
REVIEWED BY:	MJL

SHEET NO.

C-106

PROJECT # 18-732 PHASE # 1

F:\2018\18-732 Caesar Lane WWTP Improvements\Expansion Phase 1 - CDBG\Drafting\Site Plans - Civil\PHASE1 SITE PLAN AND DETAILS.dwg, C-106, 11/21/2024 1:02:47 PM

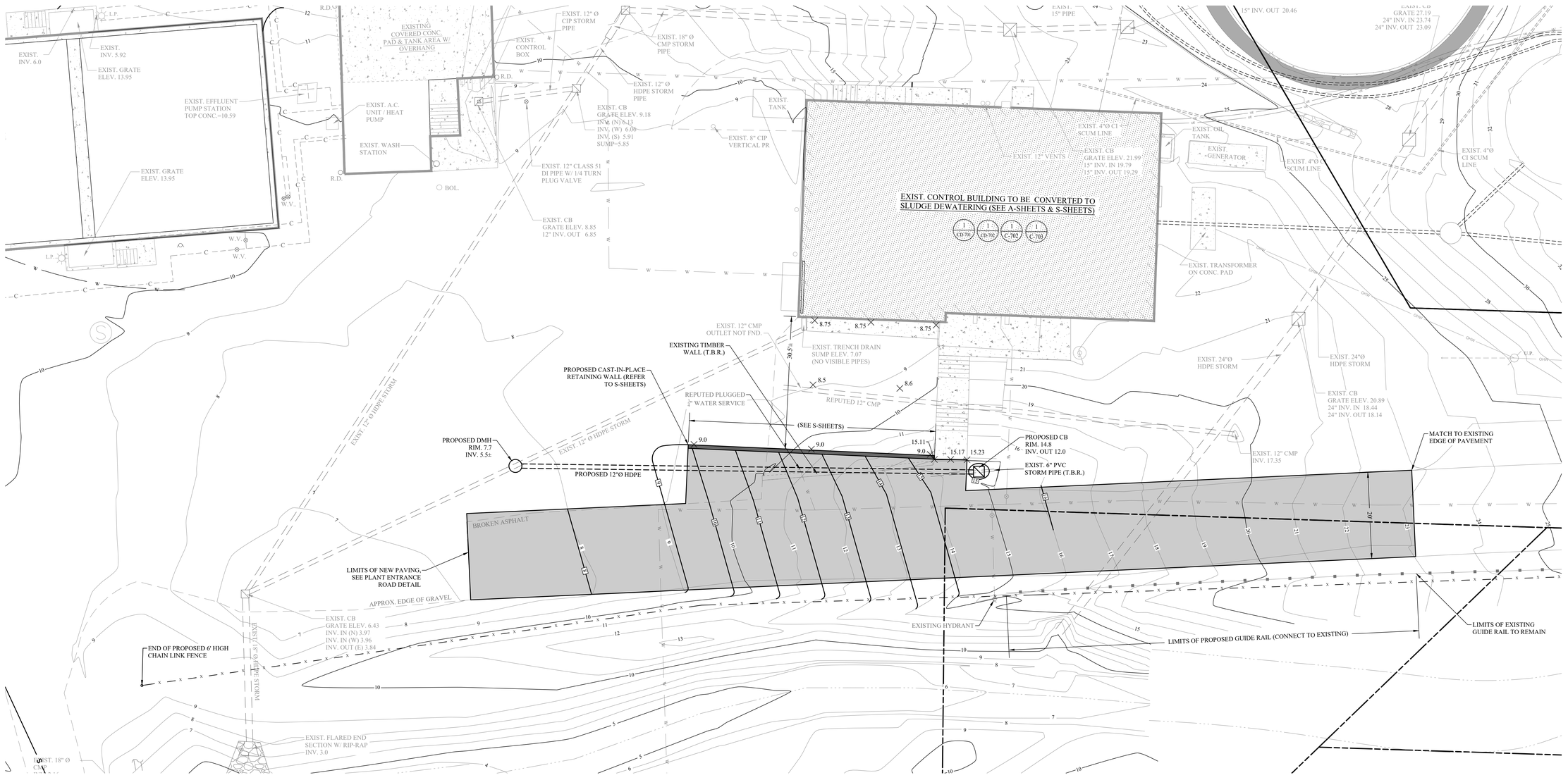

1 / C-107 EXISTING CONTROL BUILDING SITE PLAN
SCALE: 1" = 10'

GRAPHIC SCALE
10 0 5 10 20 40
1 inch = 10 feet

NOTES:
1. SURVEY AND TOPOGRAPHY SECURED FROM A PLAN PREPARED BY C.T. MALE ASSOCIATES ENTITLED "TOWN OF NEW WINDSOR WASTE WATER TREATMENT PLANT", LATEST REVISION 3/8/23.
2. THE ROAD GRADES SHOWN ON THIS PLAN REFLECT THE TOP OF FINISH TOP COURSE GRADE. HOWEVER THIS PROJECT INCLUDES PREPARATION OF SUBGRADE, PLACEMENT OF AGGREGATE AND ASPHALT BINDER COURSE. THE PLACEMENT OF ASPHALT TOP COURSE IS NOT INCLUDED IN THIS PROJECT.
3. EXISTING WATER LINE SHOWN SHALL BE CONSIDERED APPROXIMATE AND FIELD VERIFIED PRIOR TO THE REMOVAL OR INSTALLATION OF ANY STORM DRAINAGE PIPES OR STRUCTURES.
4. THE CONTRACTOR IS TO ALLOW OWNERS ACCESS TO OPERATE THE WWTP DURING CONSTRUCTION.

MHE ENGINEERING
33 Airport Center Drive, Suite 202
New Windsor, NY 12553
(845) 567-3100
111 Wheatfield Drive, Suite 1
Milford, PA 18337
(570) 296-2765

BID SET

HAZARDOUS MATERIAL NOTE:
THE SERVICES PROVIDED BY MHE, INCLUDING ALL WORK DEPICTED ON MHE PLANS, DO NOT INCLUDE SERVICES RELATED TO THE IDENTIFICATION, CONTROLS OR HANDLING OF HAZARDOUS MATERIALS, INCLUDING SUCH MATERIALS AS ASBESTOS AND LEAD PAINT. ALL TESTING, IDENTIFICATION, ABATEMENT, CONTROLS, AND HANDLING OF HAZARDOUS MATERIALS SHALL BE UNDERTAKEN BY A HAZARDOUS MATERIAL CONSULTANT AND CERTIFIED PROFESSIONALS. IF SUCH MATERIALS HAVE BEEN IDENTIFIED, CONTRACTOR WILL COMMUNICATE DIRECTLY WITH HAZARDOUS MATERIAL PROFESSIONAL FOR THE PERFORMANCE OF ANY WORK ON OR ADJACENT TO SAID MATERIALS. IF UNIDENTIFIED MATERIALS OF CONCERN ARE ENCOUNTERED WHILE UNDERTAKING THE WORK SHOWN HEREON, CONTRACTOR SHALL IMMEDIATELY NOTIFY ENGINEER AND OWNER, AND SHALL OBTAIN DIRECTION FROM THE HAZARDOUS MATERIAL CONSULTANT PRIOR TO THE CONTINUATION OF WORK INVOLVING SUSPECTED MATERIAL.

UDIG·NY SAFE DIGGING STARTS HERE
CALL 811

UNAUTHORIZED ADDITION OR ALTERATION OF THIS PLAN IS A VIOLATION OF SECTION 7209(2) OF THE NEW YORK STATE EDUCATION LAW.

ALL PRODUCTION & INTELLECTUAL PROPERTY RIGHT RESERVED ©

CAESARS LANE WWTP EXPANSION PROJECT: PHASE 1
145 CAESARS LN.
NEW WINDSOR, NY 12553
FOR TOWN OF NEW WINDSOR
555 UNION AVE.
NEW WINDSOR, NY 12553

EXISTING CONTROL BUILDING SITE PLAN

REVISIONS

NO.	DESCRIPTION	DATE

ISSUED DATE:	21 NOV, 2024
DESIGN BY:	MJS
DRAWN BY:	HPBJr
CHECKED BY:	MWW
REVIEWED BY:	MJL

SHEET NO.
C-107

PROJECT # 18-732 PHASE # 1

F:\2018\18-732 Caesar Lane WWTP Improvements\Expansion Phase I - CD\SD\Drafting\Site Plans - Civil\PHASE1 SITE PLAN AND DETAILS.dwg, C-107, 11/21/2024 1:03:01 PM

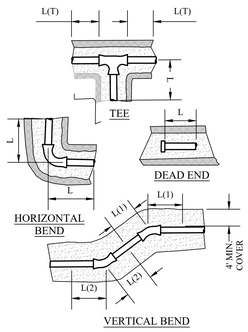

WATER MAIN RESTRAINED JOINT TABLE (D.I. PIPE)						
MINIMUM RESTRAINED JOINT LENGTH IN LINEAR FT (L)						
FITTING:	PIPE DIAMETER					
	6"	8"	10"	12"	16"	24"
DEAD ENDS	29'-0"	38'-0"	45'-0"	53'-0"	68'-0"	97'-0"
TEES (SEE NOTE 4)	1'-0"	1'-0"	5'-0"	13'-0"	28'-0"	55'-0"
90 DEG. BEND	13'-0"	17'-0"	20'-0"	23'-0"	29'-0"	41'-0"
45 DEG. BEND	6'-0"	7'-0"	8'-0"	10'-0"	12'-0"	17'-0"
22½ DEG. BEND	3'-0"	4'-0"	4'-0"	5'-0"	6'-0"	9'-0"
11¼ DEG. BEND	2 FT	2 FT	2 FT	3 FT	3 FT	4'-0"
VERTICAL BENDS	± 3' / 1'	± 4' / 2'	± 5' / 2'	± 5' / 2'	± 6' / 2'	± 7' / 2'	± 10' / 2'	± 3' / 1'
REDUCER	24"x12"					72'-0"
REDUCER	12"x8"					28'-0"

NOTES:
1) LENGTH OF RESTRAINED JOINTS BASED UPON,
a) 4'-0" MINIMUM COVER
b) TEST PRESSURE = 150 PSI
c) TYPE 5 TRENCH (PER AWWA C600)
d) SAFETY FACTOR = 1.5 TO 1
e) SOIL TYPE = ML, GRAN. FILL

2) ALL REQUIRED JOINT RESTRAINT SHALL BE MEGALUG RETAINING GLANDS AS MANUFACTURED BY EBAA IRON, OR APPROVED EQUAL.

3) CALCULATIONS WERE BASED ON DUCTILE IRON RESTRAINT LENGTH CALCULATOR FROM EBAA IRON FOR DUCTILE IRON PIPE.

4) TABLE CALCULATIONS FOR THE "TEE" ARE BASED ON A MINIMUM "L(T)" LENGTH (TO THE NEXT JOINT) OF 10 FEET. IF "L(T)" LENGTH IS LESS THAN 10 FEET, THE LENGTH OF "L" WITH RESTRAINED JOINTS MUST BE INCREASED.

5) TABLE CALCULATIONS FOR "VERTICAL BENDS" ARE BASED ON LOW SIDE DEPTH OF 6' AND 45 DEGREE BENDS. IF LOW SIDE DEPTH OR TYPE OF BEND CHANGES THE LENGTH OF VERTICAL BEND (L1) & (L2) MUST BE ADJUSTED PER DESIGN ENGINEER.

1 C-201 TYPICAL WATER RESTRAINED JOINT DETAIL
SCALE: N.T.S.

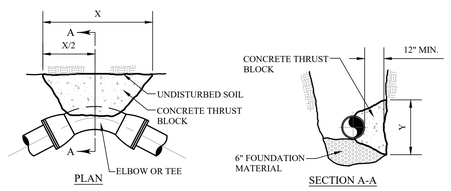

NOTE: CONCRETE TO HAVE A COMPRESSIVE STRENGTH OF 3,000 PSI.

TABLE OF DIMENSIONS									
PIPE SIZE (BRANCH OF TEE)	90° BEND		45° BEND		22 1/2° BEND		TEE & PLUG	
	X	Y	X	Y	X	Y	X	Y
(< OR = TO 6")	30"	24"	24"	18"	18"	12"	27"	21"
8"	42"	30"	30"	24"	24"	18"	36"	27"
12"	66"	42"	45"	33"	33"	24"	48"	42"
16"	84"	48"	51"	39"	39"	30"	60"	48"
24"	102"	75"	78"	60"	60"	39"	108"	108"
30"	136"	84"	97"	64"	71"	44"	112"	120"

HORIZONTAL BEND THRUST BLOCK DETAIL

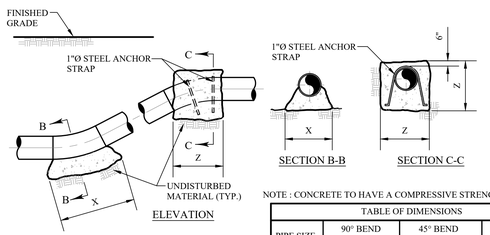

NOTE : CONCRETE TO HAVE A COMPRESSIVE STRENGTH OF 3,000 PSI.

TABLE OF DIMENSIONS										
PIPE SIZE	90° BEND			45° BEND			22 1/2° BEND			
	X	Y	Z	X	Y	Z	X	Y	Z	
(< OR = TO 6")	30"	24"	48"	24"	18"	39"	18"	12"	33"	
8"	42"	30"	60"	30"	24"	48"	24"	18"	39"	
12"	66"	42"	75"	45"	33"	60"	33"	24"	51"	
16"	84"	48"	97"	51"	39"	75"	39"	30"	62"	
24"	102"	75"	120"	78"	60"	90"	60"	39"	72"	
30"	136"	84"	120"	97"	64"	96"	71"	44"	86"	

VERTICAL BEND THRUST BLOCK DETAIL

2 C-201 TYPICAL THRUST BLOCK DETAILS
SCALE: N.T.S.

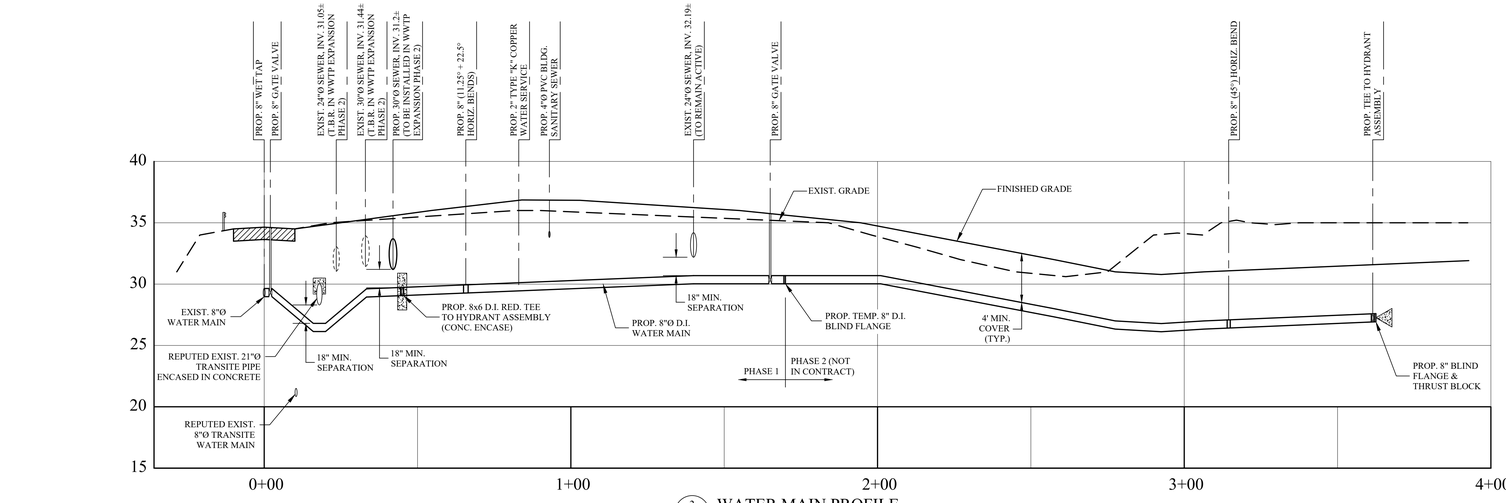

3 C-201 WATER MAIN PROFILE
SCALE: HORIZ. 1"=20'/VERT. 1"=5'

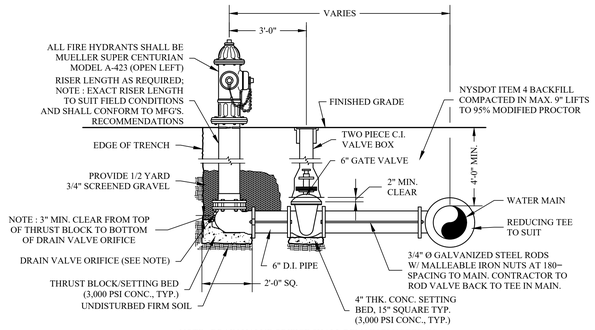

NOTE : DRAIN VALVE ORIFICE SHALL REMAIN PLUGGED IN AREAS OF HIGH WATER AND THE HYDRANT SHALL BE APPROPRIATELY MARKED TO INDICATE THAT THE BARREL MUST BE PUMPED DRY AFTER USE DURING FREEZING WEATHER.

4 C-201 HYDRANT ASSEMBLY DETAIL
SCALE: N.T.S.

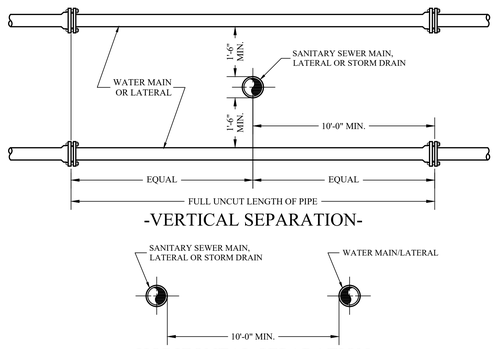

-VERTICAL SEPARATION-

-HORIZONTAL SEPARATION-

6 C-201 SANITARY SEWER/WATER MAIN SEPARATION DETAIL
SCALE: N.T.S.

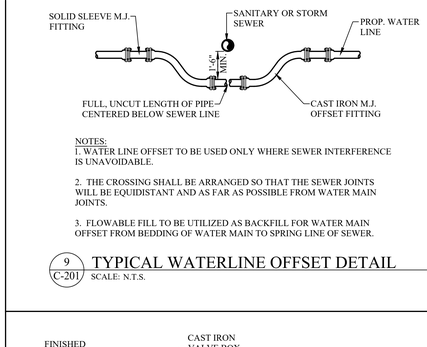

NOTES:
1. WATER LINE OFFSET TO BE USED ONLY WHERE SEWER INTERFERENCE IS UNAVOIDABLE.

2. THE CROSSING SHALL BE ARRANGED SO THAT THE SEWER JOINTS WILL BE EQUIDISTANT AND AS FAR AS POSSIBLE FROM WATER MAIN JOINTS.

3. FLOWABLE FILL TO BE UTILIZED AS BACKFILL FOR WATER MAIN OFFSET FROM BEDDING OF WATER MAIN TO SPRING LINE OF SEWER.

9 C-201 TYPICAL WATERLINE OFFSET DETAIL
SCALE: N.T.S.

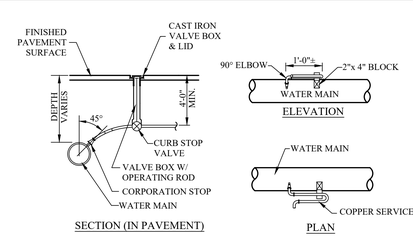

10 C-201 TYPICAL WATER SERVICE DETAILS
SCALE: N.T.S.

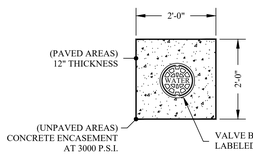

NOTES :

1. ALL VALVES TO INCLUDE MEGA-LUG RETAINER GLANDS AND BE RODDED BACK TO THE ADJACENT TEE IN THE WATER MAIN. INLINE VALVES NEED NOT BE RODDED. CONTRACTOR TO UTILIZE ¾"Ø GALVANIZED STEEL RODS WITH MALLEABLE IRON NUTS AT 180° SPACING.

2. TRACER WIRE SHALL TRAVEL UP INSIDE OF VALVE BOX WITH ENOUGH EXTRA WIRE TO EXTEND A DISTANCE OF FOUR (4) FEET BEYOND TOP OF BOX.

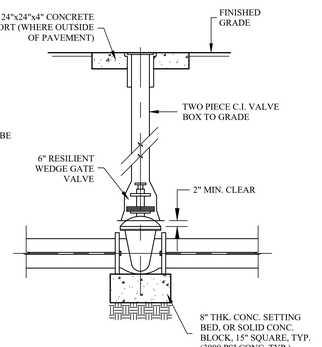

7 C-201 TYPICAL WATER VALVE DETAIL
SCALE: N.T.S.

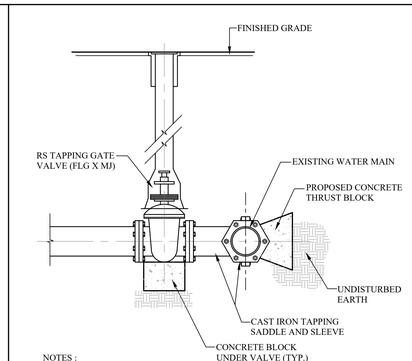

NOTES :

1. MEGA LUGS TO BE USED ON ALL MECHANICAL JOINT FITTINGS.

2. A STAINLESS STEEL TAPPING SLEEVE AND VALVE MAY BE SUBSTITUTED WITH THE APPROVAL OF THE TOWN/CITY/VILLAGE.

5 C-201 TYPICAL WET TAP DETAIL
SCALE: N.T.S.

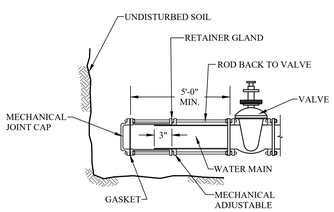

NOTE:
ALL FITTINGS TO INCLUDE MEGA-LUG RETAINER GLANDS.

8 C-201 TYPICAL BLIND FLANGE DETAIL
SCALE: N.T.S.

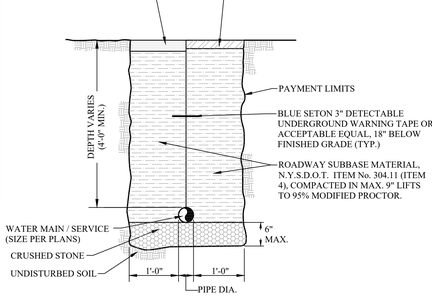

11 C-201 TYPICAL WATER MAIN/SERVICE TRENCH DETAIL
SCALE: N.T.S.

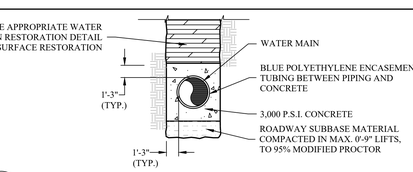

12 C-201 TYPICAL WATER MAIN ENCASEMENT DETAIL
SCALE: N.T.S.

MHE ENGINEERING
33 Airport Center Drive, Suite 202
New Windsor, NY 12553
(845) 567-3100
111 Wheatfield Drive, Suite 1
Milford, PA 18337
(570) 296-2765

BID SET

HAZARDOUS MATERIAL NOTE:
THE SERVICES PROVIDED BY MHE, INCLUDING ALL WORK DEPICTED ON MHE PLANS, DO NOT INCLUDE SERVICES RELATED TO THE IDENTIFICATION, CONTROLS OR HANDLING OF HAZARDOUS MATERIALS, INCLUDING SUCH MATERIALS AS ASBESTOS AND LEAD PAINT. ALL TESTING, IDENTIFICATION, ABATEMENT, CONTROLS, AND HANDLING OF HAZARDOUS MATERIALS SHALL BE UNDERTAKEN BY A HAZARDOUS MATERIAL CONSULTANT AND CERTIFIED PROFESSIONALS. IF SUCH MATERIALS HAVE BEEN IDENTIFIED, CONTRACTOR WILL COMMUNICATE DIRECTLY WITH HAZARDOUS MATERIAL PROFESSIONAL FOR THE PERFORMANCE OF ANY WORK ON OR ADJACENT TO SAID MATERIALS. IF UNIDENTIFIED MATERIALS OF CONCERN ARE ENCOUNTERED WHILE UNDERTAKING THE WORK SHOWN HEREON, CONTRACTOR SHALL IMMEDIATELY NOTIFY ENGINEER AND OWNER, AND SHALL OBTAIN DIRECTION FROM THE HAZARDOUS MATERIAL CONSULTANT PRIOR TO THE CONTINUATION OF WORK INVOLVING SUSPECTED MATERIAL.

UDIG·NY SAFE DIGGING STARTS HERE CALL 811

UNAUTHORIZED ADDITION OR ALTERATION OF THIS PLAN IS A VIOLATION OF SECTION 7209(2) OF THE NEW YORK STATE EDUCATION LAW.

ALL PRODUCTION & INTELLECTUAL PROPERTY RIGHT RESERVED ©

CAESARS LANE WWTP EXPANSION PROJECT: PHASE 1
145 CAESARS LN.
NEW WINDSOR, NY 12553
FOR TOWN OF NEW WINDSOR
555 UNION AVE.
NEW WINDSOR, NY 12553

WATER MAIN PROFILE & DETAILS

REVISIONS

NO.	DESCRIPTION	DATE

ISSUED DATE:	21 NOV, 2024
DESIGN BY:	MJS
DRAWN BY:	HPBJr
CHECKED BY:	MWW
REVIEWED BY:	MJL

SHEET NO.
C-201

PROJECT # 18-732 PHASE # 1

F:\2018\18-732 Caesar Lane WWTP Improvements\Expansion Phase I - CDS\23\drafting\Site Plans - Civil\PHASE1 SITE PLAN AND DETAILS.dwg, C-201, 11/21/2024 1:02:48 PM

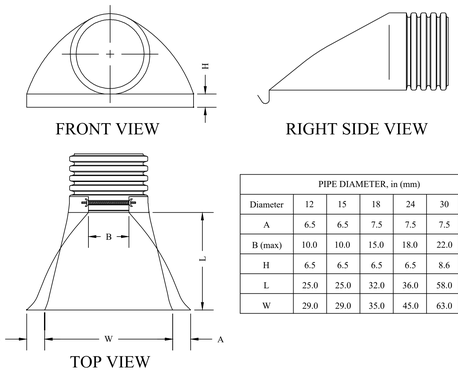

PIPE DIAMETER, in (mm)						
Diameter	12	15	18	24	30	36
A	6.5	6.5	7.5	7.5	7.5	7.5
B (max)	10.0	10.0	15.0	18.0	22.0	25.0
H	6.5	6.5	6.5	6.5	8.6	8.6
L	25.0	25.0	32.0	36.0	58.0	58.0
W	29.0	29.0	35.0	45.0	63.0	63.0

1 C-202 HDPE END SECTION DETAIL
SCALE: N.T.S.

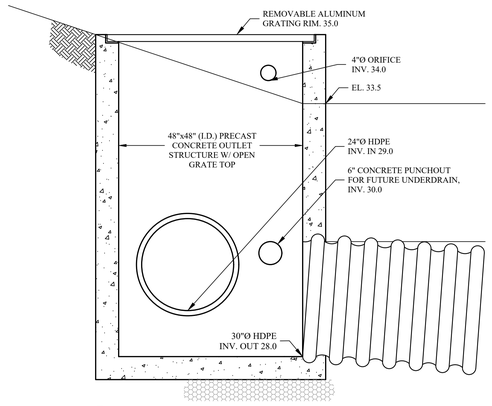

2 C-202 OUTLET STRUCTURE DETAIL
SCALE: N.T.S.

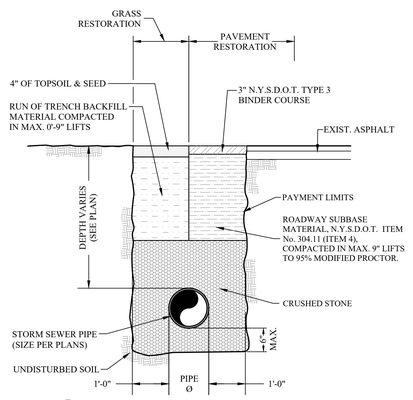

3 C-202 STORM SEWER TRENCH DETAIL
SCALE: N.T.S.

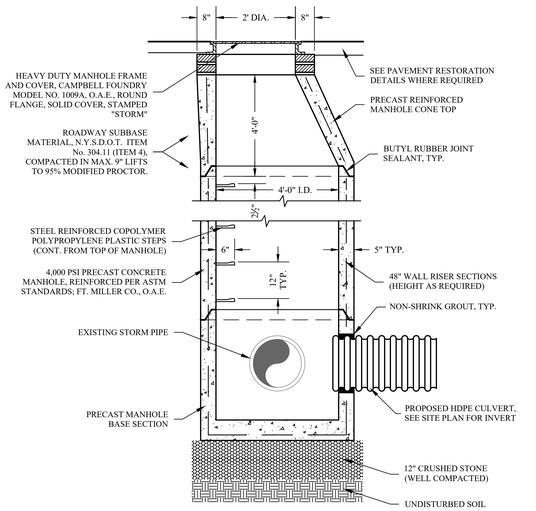

5 C-202 TYPICAL STORM DRAINAGE MANHOLE DETAIL
SCALE: N.T.S.

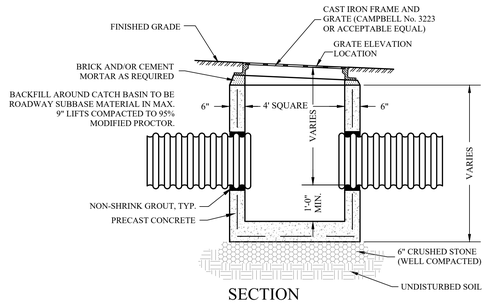

SECTION

6 C-202 FLAT TYPE CATCH BASIN DETAIL
SCALE: N.T.S.

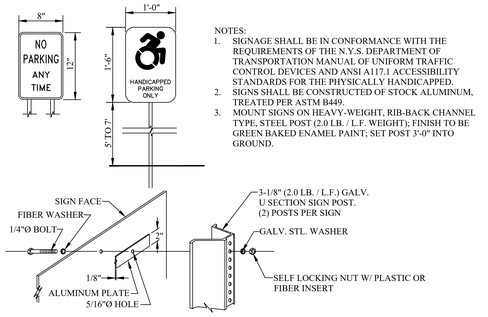

NOTES:
1. SIGNAGE SHALL BE IN CONFORMANCE WITH THE REQUIREMENTS OF THE N.Y.S. DEPARTMENT OF TRANSPORTATION MANUAL OF UNIFORM TRAFFIC CONTROL DEVICES AND ANSI A117.1 ACCESSIBILITY STANDARDS FOR THE PHYSICALLY HANDICAPPED.
2. SIGNS SHALL BE CONSTRUCTED OF STOCK ALUMINUM, TREATED PER ASTM B449.
3. MOUNT SIGNS ON HEAVY-WEIGHT, RIB-BACK CHANNEL TYPE, STEEL POST (2.0 LB. / L.F. WEIGHT); FINISH TO BE GREEN BAKED ENAMEL PAINT; SET POST 3'-0" INTO GROUND.

7 C-202 TYPICAL SIGNFACE INSTALLATION DETAIL
SCALE: N.T.S.

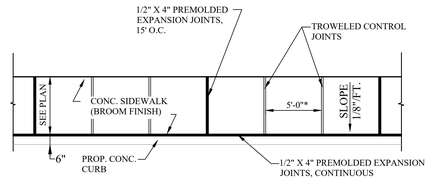

PLAN

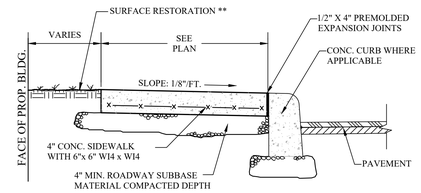

SECTION

* 5'-0" TO TROWELED CONTROL JOINTS. REFER TO PLAN FOR WIDTH OF SIDEWALKS.

** SURFACE RESTORATION (i.e. TOPSOIL & SEED) BEHIND SIDEWALK TO BE INCLUDED IN THE UNIT PRICE OF SIDEWALK.

8 C-202 TYPICAL SIDEWALK DETAIL
SCALE: N.T.S.

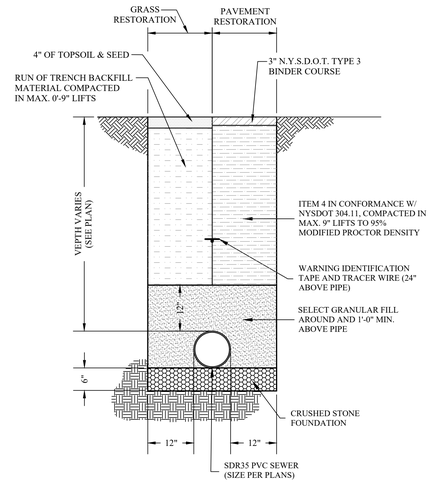

4 C-202 TYPICAL GRAVITY SEWER TRENCH DETAIL
SCALE: N.T.S.

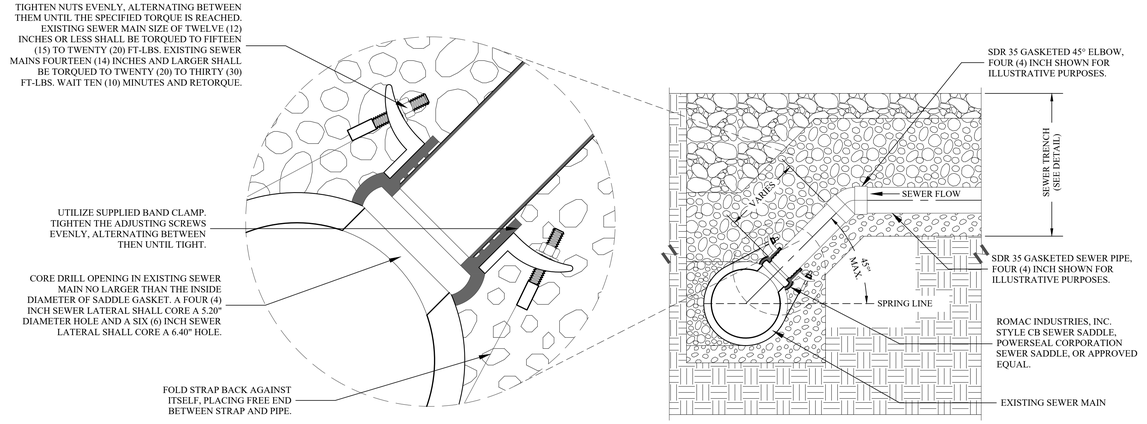

9 C-202 SANITARY SEWER LATERAL CONNECTION DETAIL
SCALE: N.T.S.

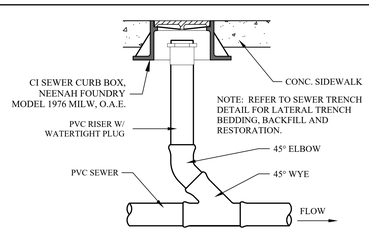

10 C-202 SEWER CLEANOUT DETAIL
SCALE: NONE

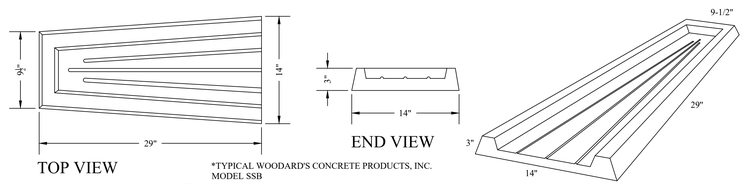

*TYPICAL WOODARD'S CONCRETE PRODUCTS, INC. MODEL SSB

11 C-202 PRECAST SPLASH BLOCK DETAIL
SCALE: NONE

MHE ENGINEERING
33 Airport Center Drive, Suite 202
New Windsor, NY 12553
(845) 567-3100
111 Wheatfield Drive, Suite 1
Milford, PA 18337
(570) 296-2765

BID SET

HAZARDOUS MATERIAL NOTE:
THE SERVICES PROVIDED BY MHE, INCLUDING ALL WORK DEPICTED ON MHE PLANS, DO NOT INCLUDE SERVICES RELATED TO THE IDENTIFICATION, CONTROLS OR HANDLING OF HAZARDOUS MATERIALS, INCLUDING SUCH MATERIALS AS ASBESTOS AND LEAD PAINT. ALL TESTING, IDENTIFICATION, ABATEMENT, CONTROLS, AND HANDLING OF HAZARDOUS MATERIALS SHALL BE UNDERTAKEN BY A HAZARDOUS MATERIAL CONSULTANT AND CERTIFIED PROFESSIONALS. IF SUCH MATERIALS HAVE BEEN IDENTIFIED, CONTRACTOR WILL COMMUNICATE DIRECTLY WITH HAZARDOUS MATERIAL PROFESSIONAL FOR THE PERFORMANCE OF ANY WORK ON OR ADJACENT TO SAID MATERIALS. IF UNIDENTIFIED MATERIALS OF CONCERN ARE ENCOUNTERED WHILE UNDERTAKING THE WORK SHOWN HEREON, CONTRACTOR SHALL IMMEDIATELY NOTIFY ENGINEER AND OWNER, AND SHALL OBTAIN DIRECTION FROM THE HAZARDOUS MATERIAL CONSULTANT PRIOR TO THE CONTINUATION OF WORK INVOLVING SUSPECTED MATERIAL.

UDIG·NY SAFE DIGGING STARTS HERE CALL 811

UNAUTHORIZED ADDITION OR ALTERATION OF THIS PLAN IS A VIOLATION OF SECTION 7209(2) OF THE NEW YORK STATE EDUCATION LAW.

ALL PRODUCTION & INTELLECTUAL PROPERTY RIGHT RESERVED ©

CAESARS LANE WWTP EXPANSION PROJECT: PHASE 1
145 CAESARS LN.
NEW WINDSOR, NY 12553
FOR TOWN OF NEW WINDSOR
555 UNION AVE.
NEW WINDSOR, NY 12553

SANITARY SEWER, STORM & SITE DETAILS

REVISIONS

NO.	DESCRIPTION	DATE

ISSUED DATE:	21 NOV, 2024
DESIGN BY:	MJS
DRAWN BY:	HPBJr
CHECKED BY:	MWW
REVIEWED BY:	MJL

SHEET NO.
C-202

PROJECT # 18-732 PHASE # 1

F:\2018\18-732 Caesar Lane WWTP Improvements\Expansion Phase I - CDS\02\drafting\Site Plans - Civil\PHASE I SITE PLAN AND DETAILS.dwg, C-202, 11/21/2024 1:03:00 PM

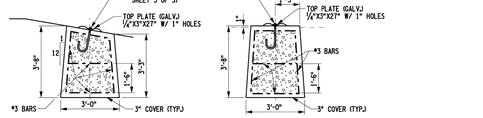

ELEVATION
INCLINED TOP FACE CONCRETE ANCHOR

ELEVATION
SQUARE TOP FACE CONCRETE ANCHOR

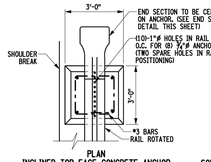

PLAN
INCLINED TOP FACE CONCRETE ANCHOR

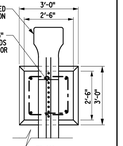

PLAN
SQUARE TOP FACE CONCRETE ANCHOR

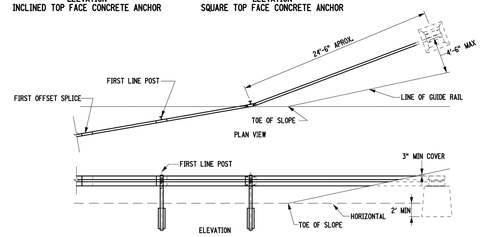

ANCHORAGE UNIT FOR CORRUGATED BEAM GUIDE RAILING IN EARTH CUT SLOPE

STATE OF NEW YORK DEPARTMENT OF TRANSPORTATION	
U.S. CUSTOMARY STANDARD SHEET	
WEAK POST CORRUGATED-BEAM GUIDE RAILING (SHEET 1 OF 3)	
APPROVED JULY 28, 2014 /S/ RICHARD W. LEE, P.E. DEPUTY CHIEF ENGINEER DESIGN	ISSUED UNDER EB 13-028 606-07
ERRATA 2 EFF. 05/01/2018 ISSUED WITH EB 18-003	
ERRATA 1 EFF. 09/04/2014 ISSUED WITH EB 14-025	
EFFECTIVE DATE: 05/08/2014	

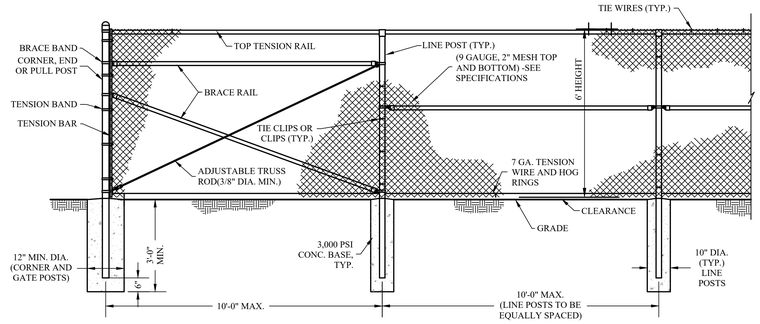

1 C-203 CHAIN LINK FENCE DETAIL
SCALE: NONE

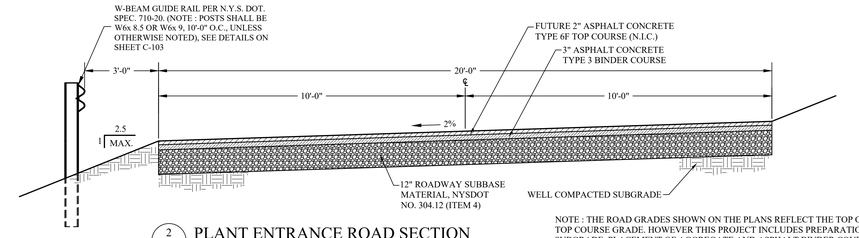

2 C-203 PLANT ENTRANCE ROAD SECTION
SCALE: NONE

NOTE : THE ROAD GRADES SHOWN ON THE PLANS REFLECT THE TOP OF FINISH TOP COURSE GRADE. HOWEVER THIS PROJECT INCLUDES PREPARATION OF SUBGRADE, PLACEMENT OF AGGREGATE AND ASPHALT BINDER COURSE. THE PLACEMENT OF ASPHALT TOP COURSE IS NOT INCLUDED IN THIS PROJECT.

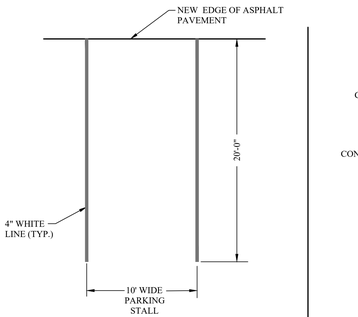

3 C-203 TYPICAL PARKING SPACE STRIPING DETAIL
SCALE: N.T.S.

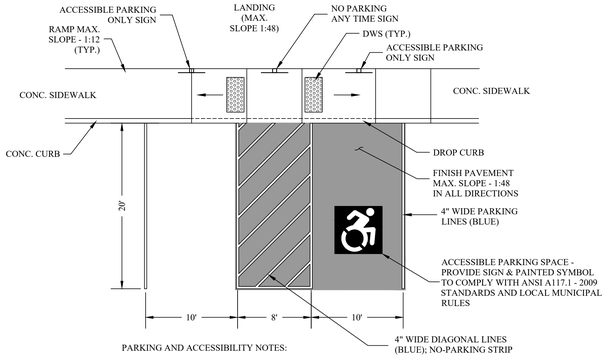

PARKING AND ACCESSIBILITY NOTES:

1. ACCESSIBLE PARKING SPACE AND ADJACENT ACCESS AISLE SHALL NOT BE SLOPED STEEPER THAN 1:48 IN ALL DIRECTIONS. ACCESS AISLES SHALL BE AT THE SAME LEVEL AS THE PARKING SPACES THEY SERVE.
2. ACCESSIBLE ROUTE SHALL NOT HAVE A RUNNING SLOPE STEEPER THAN 1:20. THE CROSS SLOPE OF THE ACCESSIBLE ROUTE SHALL NOT BE STEEPER THAN 1:48 IN ACCORDANCE WITH ICC/ANSI 117.1-2003.
3. ACCESSIBLE PARKING SPACES SHALL BE IN CONFORMANCE WITH ICC/ANSI A117.1 EXCEPT THAT SPACES SHALL BE PROVIDED WITH ACCESS AISLES AT LEAST 8' IN WIDTH.
4. SHADED AREA TO RECEIVE 1½" TYPE 6 WEARING COURSE TO MATCH PROPOSED FINAL GRADE. CONTRACTOR TO BLEND WEARING COURSE INTO BINDER COURSE AT MAX. SLOPE OF 1:48.

5 C-203 ACCESSIBLE PARKING SPACE DETAIL
SCALE: N.T.S.

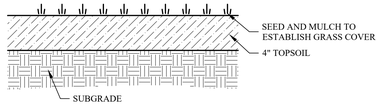

* ALL DISTURBED AREAS, OTHER THAN AREAS PROPOSED FOR STRUCTURES, PAVEMENT OR SIDEWALK, SHALL BE VEGETATED WITH GRASS AS SHOWN ON THIS DETAIL.

4 C-203 TOPSOIL RESTORATION DETAIL
SCALE: NONE

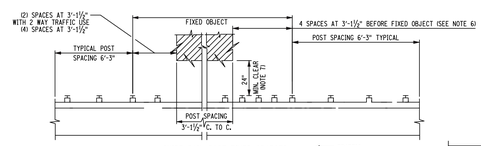

GUIDE RAIL PAST FIXED OBJECTS
(BETWEEN 24 INCHES AND 48 INCHES)

TRAFFIC

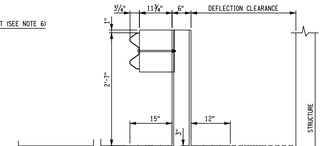

TYPICAL SECTION FOR CORRUGATED BLOCKED-OUT GUIDE RAIL SHOWN PAST FIXED OBJECT (WITHOUT CURB)

NOTES:

1. ALL RUNS OF GUIDE RAIL ARE TO BE ANCHORED AT BOTH ENDS.
2. STEEL SOIL PLATES SHALL BE USED IN AREAS WITH POST SPACING OF 3'-1½" OR LESS.
3. IF THERE IS INSUFFICIENT DEPTH BETWEEN THE SURFACE OF THE GROUND AT THE GUIDE RAIL AND A CONCRETE FOOTING, ONE OF THE FOLLOWING METHODS SHALL BE EMPLOYED DEPENDING ON AVAILABLE DEPTHS:
   A. 2'-3" TO 4'-8" - SHORTEN THE POST TO REQUIRED DEPTH BY CUTTING THE BOTTOM OFF THE POST.
   B. 1'-6" TO 2'-3" - SHORTEN THE POST TO THE REQUIRED DEPTH BY CUTTING THE BOTTOM OFF THE POST AND PLACE THE POST IN A 1'-9" CONCRETE ENCASEMENT EXTENDING FROM THE TOP OF THE FOOTING TO THE GROUND SURFACE.
   C. LESS THAN 1'-6" - PREFABRICATE A POST WITH BASE PLATE AS SHOWN IN THE STANDARD HEAVY POST ON BASE PLATE DETAIL, EXCAVATE THE FOOTING, BOLT THE BASE TO THE FOOTING USING THE ANCHOR BOLT INSTALLATION DETAIL. CUT POST TO REQUIRED HEIGHT AND DRILL HOLES FOR THE RAIL INSTALLATION. ALL WELDS, CUTS AND DRILLED HOLES SHALL BE GALVANIZED. ATTACH POST AS SHOWN IN THE DETAILS ON THE HPBO (MOD) MEDIAN BARRIER STANDARD SHEET.
4. DIMENSIONS OF THE TIMBER BLOCKOUTS ARE NOMINAL. DIMENSIONS OF PLASTIC AND SYNTHETIC BLOCKOUTS ARE AS SHOWN.
5. THE OFFSET OF THE GUIDE RAIL OR MEDIAN BARRIER SHALL BE MEASURED FROM FACE OF CURB TO FACE OF RAIL. THE RAIL MOUNTING HEIGHT OF ALL GUIDE RAIL OR MEDIAN BARRIER PLACED BEHIND THE CURB REGARDLESS OF CURB HEIGHT OR SPEED SHALL BE MEASURED FROM THE PAVEMENT. WHEN THE OFFSET IS 1'-0" OR LESS AND TO THE GROUND SURFACE UNDER THE FACE OF THE RAIL WHEN THE OFFSET IS GREATER THAN 1'-0".
6. BEAMS TO BE ERECTED ON A RADIUS OF 150'-0" OR LESS SHALL BE SHOP WORKED TO THE REQUIRED CURVATURE. PAYMENT WILL BE MADE UNDER THE APPROPRIATE ITEM.
7. IF POST SPACING IS REDUCED TO 1'-9¼", MINIMUM CLEAR DISTANCE OF 18" MAY BE ASSUMED IF OBSTACLE IS < 5" TALL.
8. DIMENSIONS FOR BEAM SPLICE & BOLT HARDWARE ARE LOCATED ON THE STANDARD SHEET FOR WEAK POST CORRUGATED-BEAM GUIDE RAILING.

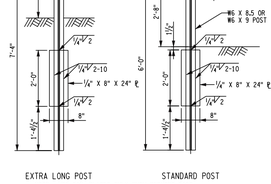

EXTRA LONG POST

STANDARD POST

NOTE: USE SOIL PLATES ONLY WHEN REDUCED POST SPACING IS REQUIRED. (SEE NOTE 2.)

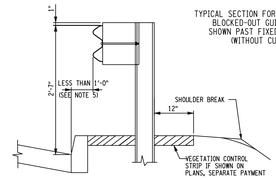

RAIL HEIGHT DETERMINATION
NEXT TO CURB

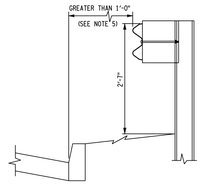

RAIL HEIGHT DETERMINATION
WHEN SET BACK FROM CURB

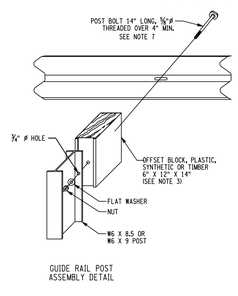

GUIDE RAIL POST ASSEMBLY DETAIL

TOP VIEW OF OFFSET BLOCK

ELEVATION OF OFFSET BLOCK

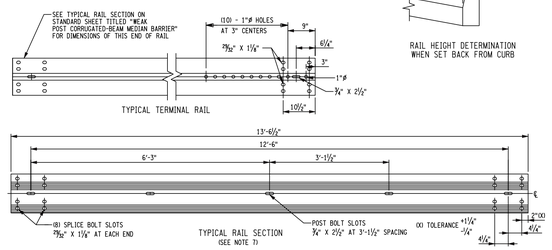

TYPICAL TERMINAL RAIL

TYPICAL RAIL SECTION
(SEE NOTE 7)

ERRATA 3 EFF. 09/01/2018 ISSUED WITH EB 18-023	
ERRATA 2 EFF. 05/01/2018 ISSUED WITH EB 18-003	
ERRATA 1 EFF. 05/01/2016 ISSUED WITH EB 16-008	
APPROVED SEPTEMBER 23, 2013 /S/ RICHARD W. LEE, P.E. DEPUTY CHIEF ENGINEER DESIGN	ISSUED UNDER EB 13-028 606-09

NEW YORK STATE OF OPPORTUNITY. Department of Transportation

U.S. CUSTOMARY STANDARD SHEET

HEAVY POST BLOCKED-OUT (MOD.) CORRUGATED-BEAM GUIDE RAILING (SHEET 1 OF 2)

NOTES:

1. WHEN FIELD CONDITIONS WILL NOT PERMIT A TOTAL OFFSET OF 18'-0", INCREASE THE APPROACH RADIUS TO FIT THE CONDITIONS.
2. TO BE USED WHEN FIELD CONDITIONS WARRANT THIS TOTAL OFFSET.
3. THE ELEVATION INCREASE FROM 29" TO 31" SHALL BE ACHEIVED IN THE FIRST FULL RAIL SECTION FOLLOWING POST "A".

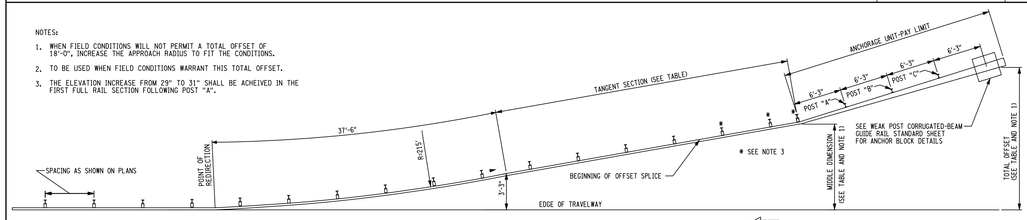

TYPICAL APPROACH END

TRAFFIC

TANGENT SECTION	MIDDLE DIMENSION	TOTAL OFFSET	REMARKS
0'-0"	3'-3"	11'-6"	NOTE 1
37'-6"	9'-9"	18'-0"	NOTE 1+2
50'-0"	11'-11"	20'-2"	NOTE 2
62'-6"	14'-1"	22'-4"	NOTE 2
75'-0"	16'-3"	24'-6"	NOTE 2
87'-6"	18'-5"	26'-8"	NOTE 2
100'-0"	20'-7"	28'-10"	NOTE 2
112'-6"	22'-9"	31'-0"	NOTE 2

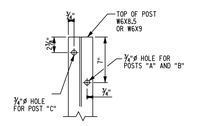

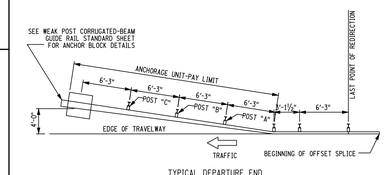

TYPICAL DEPARTURE END

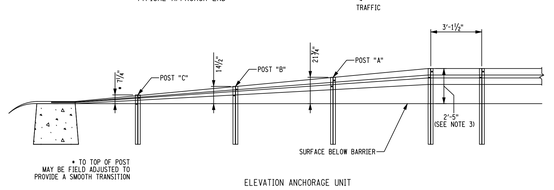

* TO TOP OF POST MAY BE FIELD ADJUSTED TO PROVIDE A SMOOTH TRANSITION

ELEVATION ANCHORAGE UNIT

ANCHOR UNIT POST DETAIL
POSTS "A", "B", AND "C"

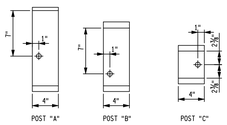

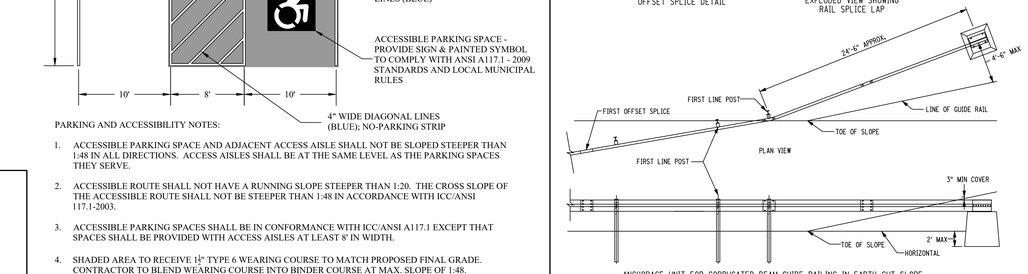

ANCHORAGE UNIT FOR CORRUGATED BEAM GUIDE RAILING IN EARTH CUT SLOPE
(SEE WEAK POST (MOD) CORRUGATED-BEAM GUIDE RAIL STANDARD SHEET FOR DETAILS)

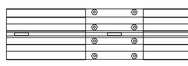

OFFSET SPLICE DETAIL

EXPLODED VIEW SHOWING RAIL SPLICE LAP

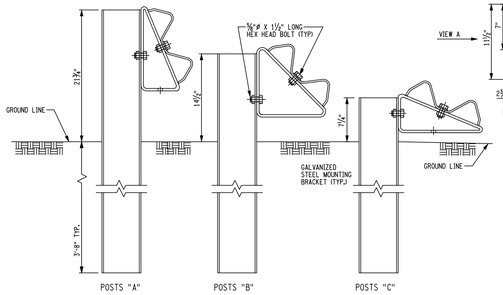

ANCHORAGE UNIT POST ASSEMBLY FOR HOLE LOCATIONS SEE ANCHOR UNIT POST DETAIL

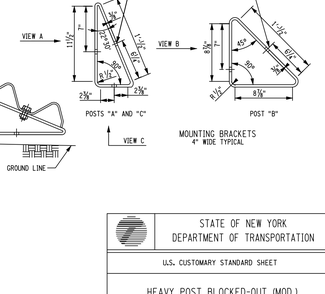

MOUNTING BRACKETS
4" WIDE TYPICAL

STATE OF NEW YORK DEPARTMENT OF TRANSPORTATION	
U.S. CUSTOMARY STANDARD SHEET	
HEAVY POST BLOCKED-OUT (MOD.) CORRUGATED-BEAM GUIDE RAILING (SHEET 2 OF 2)	
ERRATA 2 EFF. 05/01/2018 ISSUED WITH EB 18-003	
ERRATA 1 EFF. 09/04/2014 ISSUED WITH EB 14-025	
APPROVED JULY 28, 2014 /S/ RICHARD W.LEE,P.E. DEPUTY CHIEF ENGINEER DESIGN	ISSUED UNDER EB 13-028 606-09
EFFECTIVE DATE: 05/08/2014	

MHE ENGINEERING
33 Airport Center Drive, Suite 202
New Windsor, NY 12553
(845) 567-3100
111 Wheatfield Drive, Suite 1
Milford, PA 18337
(570) 296-2765

BID SET

HAZARDOUS MATERIAL NOTE:
THE SERVICES PROVIDED BY MHE, INCLUDING ALL WORK DEPICTED ON MHE PLANS, DO NOT INCLUDE SERVICES RELATED TO THE IDENTIFICATION, CONTROLS OR HANDLING OF HAZARDOUS MATERIALS, INCLUDING SUCH MATERIALS AS ASBESTOS AND LEAD PAINT. ALL TESTING, IDENTIFICATION, ABATEMENT, CONTROLS, AND HANDLING OF HAZARDOUS MATERIALS SHALL BE UNDERTAKEN BY A HAZARDOUS MATERIAL CONSULTANT AND CERTIFIED PROFESSIONALS. IF SUCH MATERIALS HAVE BEEN IDENTIFIED, CONTRACTOR WILL COMMUNICATE DIRECTLY WITH HAZARDOUS MATERIAL PROFESSIONAL FOR THE PERFORMANCE OF ANY WORK ON OR ADJACENT TO SAID MATERIALS. IF UNIDENTIFIED MATERIALS OF CONCERN ARE ENCOUNTERED WHILE UNDERTAKING THE WORK SHOWN HEREON, CONTRACTOR SHALL IMMEDIATELY NOTIFY ENGINEER AND OWNER, AND SHALL OBTAIN DIRECTION FROM THE HAZARDOUS MATERIAL CONSULTANT PRIOR TO THE CONTINUATION OF WORK INVOLVING SUSPECTED MATERIAL.

UDIG·NY SAFE DIGGING STARTS HERE CALL 811

UNAUTHORIZED ADDITION OR ALTERATION OF THIS PLAN IS A VIOLATION OF SECTION 7209(2) OF THE NEW YORK STATE EDUCATION LAW.

ALL PRODUCTION & INTELLECTUAL PROPERTY RIGHT RESERVED ©

CAESARS LANE WWTP EXPANSION PROJECT: PHASE 1
145 CAESARS LN.
NEW WINDSOR, NY 12553
FOR TOWN OF NEW WINDSOR
555 UNION AVE.
NEW WINDSOR, NY 12553

SITE DETAILS

REVISIONS		
NO.	DESCRIPTION	DATE

ISSUED DATE:	21 NOV, 2024
DESIGN BY:	MJS
DRAWN BY:	HPBJr
CHECKED BY:	MWW
REVIEWED BY:	MJL

SHEET NO.
C-203

PROJECT # 18-732 PHASE # 1

F:\2018\18-732 Caesar Lane WWTP Improvements\Expansion Phase 1 - CDBG\Drafting\Site Plans - Civil\PHASE1 SITE PLAN AND DETAILS.dwg, C-203, 11/27/2024 1:53:12 PM

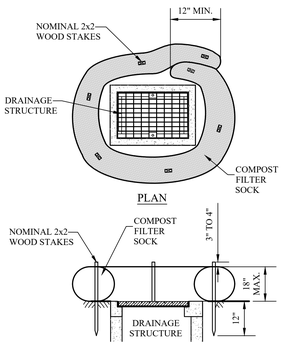

TYPICAL INLET PROTECTION DETAIL

1 / C-204 SCALE: N.T.S.

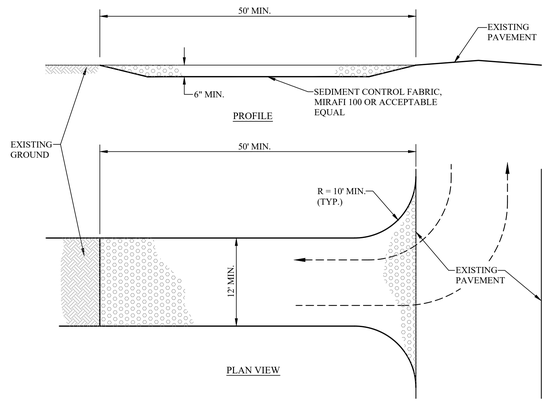

CONSTRUCTION SPECIFICATIONS:

1. STONE SIZE - USE 1"- 4" STONE OR RECLAIMED OR RECYCLED CONCRETE EQUIVALENT.
2. LENGTH - NOT LESS THAN 50 FEET (EXCEPT ON A SINGLE RESIDENCE LOT WHERE A 30 FOOT MIN. LENGTH WOULD APPLY).
3. THICKNESS - NOT LESS THAN SIX (6) INCHES.
4. WIDTH - TWELVE (12) FOOT MIN. BUT NOT LESS THAN THE FULL WIDTH AT POINTS WHERE INGRESS OR EGRESS OCCURS. TWENTY-FOUR (24) FOOT IF SINGLE ENTRANCE TO SITE.
5. GEOTEXTILE - WILL BE PLACED OVER THE ENTIRE AREA PRIOR TO PLACING OF STONE.
6. SURFACE WATER - ALL SURFACE WATER FLOWING OR DIVERTED TOWARD CONSTRUCTION ACCESS SHALL BE PIPED BENEATH THE ENTRANCE. IF PIPING IS IMPRACTICAL, A MOUNTABLE BERM WITH 5:1 SLOPES WILL BE PERMITTED.
7. MAINTENANCE - THE ENTRANCE SHALL BE MAINTAINED IN A CONDITION WHICH WILL PREVENT TRACKING OR FLOWING OF SEDIMENT ONTO PUBLIC RIGHTS-OF-WAY. ALL SEDIMENT SPILLED, DROPPED, WASHED OR TRACKED ONTO PUBLIC RIGHTS-OF-WAY MUST BE REMOVED IMMEDIATELY.
8. WHEN WASHING IS REQUIRED, IT SHALL BE DONE ON AN AREA STABILIZED WITH STONE AND WHICH DRAINS INTO AN APPROVED SEDIMENT TRAPPINGS DEVICE.
9. PERIODIC INSPECTION AND NEEDED MAINTENANCE SHALL BE PROVIDED AFTER EACH RAIN.
10. TEMPORARY CONSTRUCTION ENTRANCES, EXITS AND TEMPORARY ACCESS SHALL BE SUBJECT TO THE APPROVAL OF THE APPROPRIATE AUTHORITIES.

STABILIZED CONSTRUCTION ENTRANCE DETAIL

2 / C-204 SCALE: N.T.S.

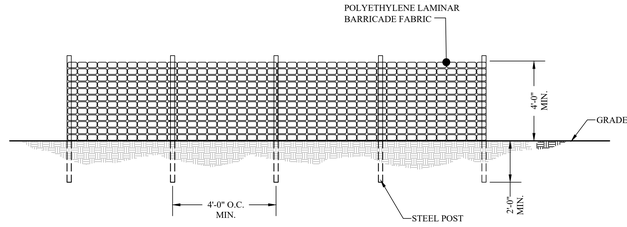

ORANGE SAFETY FENCE DETAIL

3 / C-204 SCALE: N.T.S.

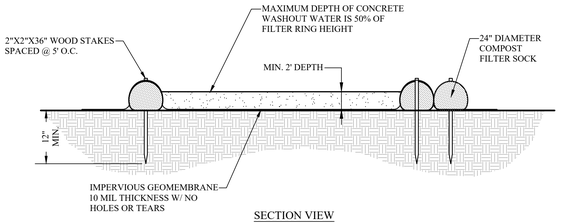

SECTION VIEW

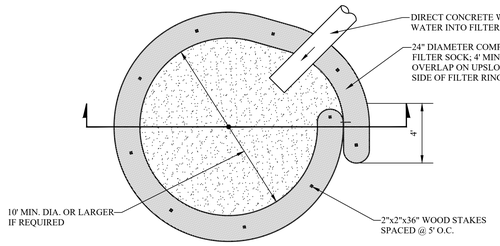

NOTES:

1. CONCRETE WASHOUTS (CW) SHOULD BE LOCATED A MINIMUM OF 100' FROM DRAINAGE SWALES, STORM DRAIN INLETS, OPEN DRAINAGE FACILITIES, AND WATERCOURSES. EACH CW SHOULD BE LOCATED AWAY FROM CONSTRUCTION TRAFFIC OR ACCESS AREAS TO PREVENT DISTURBANCE OR TRACKING.
2. INSTALL ON FLAT GRADE FOR OPTIMUM PERFORMANCE.
3. 18" DIAMETER FILTER SOCK MAY BE STACKED ONTO DOUBLE 24" DIAMETER SOCKS IN PYRAMIDAL CONFIGURATION FOR ADDED HEIGHT.
4. A SUITABLE IMPERVIOUS GEOMEMBRANE SHALL BE PLACED AT THE LOCATION OF THE WASHOUT PRIOR TO INSTALLING THE SOCKS.
5. ALL CONCRETE WASHOUTS SHOULD BE INSPECTED DAILY. DAMAGED, LEAKING OR 75% FULL FACILITIES SHALL BE REPLACED.
6. WHEN THE CW(S) ARE NO LONGER REQUIRED FOR THE WORK, THE HARDENED CONCRETE SHOULD BE REMOVED AND DISPOSED.

PUMPED CONCRETE WASHOUT DETAIL

5 / C-204 SCALE: N.T.S.

EROSION AND SEDIMENTATION CONTROL NOTES:

1. THIS PLAN MUST BE USED IN CONJUNCTION WITH THE COMPLETE PROJECT SITE PLAN SET.
2. MAINTENANCE OF ALL EROSION AND SEDIMENT CONTROL FACILITIES IS THE RESPONSIBILITY OF THE GENERAL CONTRACTOR. FACILITIES SHALL BE INSPECTED AFTER EVERY RAINFALL EVENT, BUT NOT LESS THAN ONCE A WEEK, AND IMMEDIATELY RESTORED WHERE NECESSARY.
   a) Disturbed areas are to be re-seeded, if necessary.
   b) Compost filter socks are to be cleaned, re-filled or replaced as necessary.
3. UPON COMPLETION OR TEMPORARY CESSATION OF THE EARTH DISTURBANCE ACTIVITY, OR ANY STAGE THEREOF, THE PROJECT SITE SHALL BE IMMEDIATELY STABILIZED. DURING PERIODS OF NON-GERMINATION, MULCH WILL BE APPLIED IN ACCORDANCE WITH THE RATES.
4. ALL SEDIMENT REMOVED FROM BMP'S SHALL BE PLACED IN THE SEDIMENT STOCKPILE AREA(S) SHOWN ON THE PLAN.
5. CONTRACTOR IS RESPONSIBLE FOR ALL DUST CONTROL DURING CONSTRUCTION.
6. EROSION CONTROLS MUST BE CONSTRUCTED, STABILIZED AND FUNCTIONAL BEFORE SITE DISTURBANCE BEGINS WITHIN THE TRIBUTARY AREAS.
7. STOCKPILE HEIGHTS MUST NOT EXCEED 35 FEET. STOCKPILE SLOPES MUST BE 2:1 OR FLATTER.
8. INITIATE EARTHMOVING ACTIVITIES FOR SITE DEVELOPMENT. ANY UNSUITABLE MATERIAL IS TO BE REMOVED FROM THE PROJECT SITE. CONTRACTOR SHALL BE SOLELY RESPONSIBLE FOR ALL EROSION AND SEDIMENTATION CONTROL MEASURES AT ANY OFF-SITE SPOIL AREAS. PLACE AND COMPACT MATERIAL IN AREAS OF FILL TO OBTAIN NECESSARY GRADES.
9. PIPELINES WITH JOINTS THAT ALLOW A MANUFACTURED LENGTH OF PIPE TO BE PLACED IN THE TRENCH WITH THE PIPE JOINT ASSEMBLED/MADE IN THE TRENCH REQUIRE AN OPEN PIPELINE TRENCH THAT IS ONLY SLIGHTLY LONGER THAN THE LENGTH OF PIPE BEING INSTALLED. THE TOTAL LENGTH OF EXCAVATED TRENCH OPEN AT ANY ONE TIME SHOULD NOT BE GREATER THAN THE TOTAL LENGTH OF PIPELINE/UTILITY LINE THAT CAN BE PLACED IN THE TRENCH AND BACKFILLED IN ONE WORKING DAY. SOIL SUPPLEMENTS, SEED AND MULCH SHOULD BE APPLIED IMMEDIATELY AFTER THE PIPELINE/UTILITY LINE IS INSTALLED. ALL TRENCHES SHOULD BE BACKFILLED AND TEMPORARILY STABILIZED AT THE END OF EACH DAY.
10. THE OPERATOR SHALL ASSURE THAT AN EROSION AND SEDIMENT CONTROL PLAN HAS BEEN PREPARED, APPROVED BY THE TOWN OF NEW WINDSOR, AND IS BEING IMPLEMENTED AND MAINTAINED FOR ALL SOIL AND/OR ROCK SPOIL AND BORROW AREAS, REGARDLESS OF THEIR LOCATIONS.
11. BEFORE INITIATING ANY REVISIONS TO THE APPROVED EROSION AND SEDIMENT CONTROL PLAN OR REVISIONS TO OTHER PLANS THAT MAY AFFECT THE EFFECTIVENESS OF THE APPROVED E & S CONTROL PLAN, THE OPERATOR MUST RECEIVE APPROVAL OF THE REVISIONS FROM THE TOWN OF NEW WINDSOR.
12. IMMEDIATELY UPON DISCOVERING UNFORESEEN CIRCUMSTANCES POSING THE POTENTIAL FOR ACCELERATED EROSION AND/OR SEDIMENT POLLUTION, THE OPERATOR SHALL IMPLEMENT APPROPRIATE BEST MANAGEMENT PRACTICES TO ELIMINATE POTENTIAL FOR ACCELERATED EROSION AND/OR SEDIMENT POLLUTION
13. DUE DILIGENCE IS TO BE PERFORMED BY THE CONTRACTOR FOR ANY IMPORTED TOPSOIL FILL MATERIAL TO ENSURE ONLY CLEAN FILL IS BROUGHT ONSITE.
14. ALL DISTURBED AREAS WILL BE RESTORED IN ACCORDANCE WITH THE SOIL RESTORATION REQUIREMENTS IN TABLE 5.3 OF THE DESIGN MANUAL.
17. THE CONTRACTOR SHALL COMPLY WITH ALL PROVISIONS OF THE APPLICABLE NEW YORK STATE DEPARTMENT OF ENVIRONMENTAL CONSERVATION WATER QUALITY CERTIFICATION PROGRAM.
18. ALL NECESSARY PRECAUTIONS SHALL BE TAKEN TO PREVENT CONTAMINATION OF THE STREAMS BY SILT, SEDIMENT, FUELS, SOLVENTS, LUBRICANTS, EPOXY COATINGS, CONCRETE, LEACHATE, OR ANY OTHER POLLUTANT ASSOCIATED WITH CONSTRUCTION AND CONSTRUCTION PROCEDURES.
19. DURING CONSTRUCTION, NO WET OR FRESH CONCRETE OR LEACHATE SHALL BE ALLOWED TO ESCAPE INTO THE WATERS OF NEW YORK STATE, NOR SHALL WASHINGS FROM CONCRETE TRUCKS, MIXERS OR OTHER DEVICES BE ALLOWED TO ENTER ANY WETLANDS OR WATERS.
20. ANY DEBRIS OR EXCESS MATERIALS FROM CONSTRUCTION OF THIS PROJECT SHALL BE IMMEDIATELY AND COMPLETELY REMOVED FROM THE BED AND BANKS OF ALL WATER AREAS TO AN APPROPRIATE UPLAND AREA FOR DISPOSAL.
21. ALL EXCAVATED MATERIAL SHALL BE DISPOSED OF ON AN UPLAND SITE AND BE SUITABLY STABILIZED SO THAT IT CANNOT REASONABLY REENTER ANY WATER BODY OR WETLAND AREA.
22. ALL AREAS OF SOIL DISTURBANCE RESULTING FROM THIS PROJECT SHALL BE SEEDED WITH PERENNIAL GRASS SEED AND MULCHED WITH HAY OR STRAW WITHIN ONE (1) WEEK OF FINAL GRADING. IF CONSTRUCTION ACTIVITIES ARE DISCONTINUED IN AREAS OF SOIL DISTURBANCE BEFORE FINAL GRADING IS COMPLETE, TEMPORARY GRADING SHALL ALSO BE SEEDED AND MULCHED. MULCH SHALL BE MAINTAINED UNTIL SUITABLE VEGETATIVE COVER IS ESTABLISHED.
23. PERIODIC CLEANING OF TEMPORARY SOIL EROSION AND POLLUTION CONTROL DEVICES MAY BE NECESSARY AS REQUESTED BY THE PROJECT ENGINEER.
24. IN THE EVENT DEWATERING OPERATIONS BECOME NECESSARY, A SETTLING BASIN WILL BE REQUIRED UNLESS THE PUMP DISCHARGE IS AS CLEAR AND FREE OF SEDIMENT AS THE FLOWING STREAM. LOCATION AND DESIGN TO BE APPROVED BY THE PROJECT ENGINEER. IF DEWATERING IS DISCHARGED TO THE TOWN'S STORM DRAINAGE SYSTEM IT MUST BE FREE OF EXCESS SEDIMENTS.
25. HAYBALES HAVE A LIMITED LIFE EXPECTANCY AND SHALL BE REPLACED IN LOCATIONS WHERE THEY HAVE BEEN IN USE FOR EXTENDED PERIODS AS DIRECTED BY THE PROJECT ENGINEER.
26. ALL SEDIMENT SHALL BE PREVENTED FROM ENTERING STORM DRAINS, DITCHES OR WATERCOURSES.
27. EROSION CONTROL MEASURES SHALL BE DEEMED INCLUDED UNDER THE BID ITEMS OF THE PROPOSAL. NO SEPARATE PAYMENT SHALL BE MADE FOR THIS WORK.

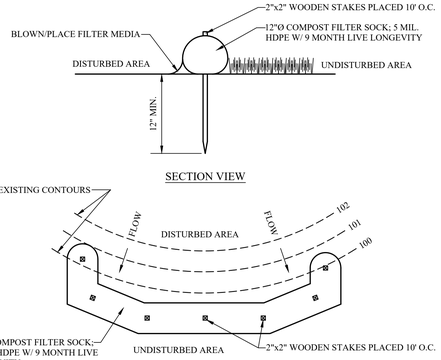

- COMPOST FILTER SOCK SHALL BE PLACED AT EXISTING LEVEL GRADE. BOTH ENDS OF THE SOCK SHALL BE EXTENDED AT LEAST 8 FEET UP SLOPE AT 45 DEGREES TO THE MAIN SOCK ALIGNMENT (SEE DETAIL).
- TRAFFIC SHALL NOT BE PERMITTED TO CROSS FILTER SOCKS.
- ACCUMULATED SEDIMENT SHALL BE REMOVED WHEN IT REACHES ½ THE ABOVE GROUND HEIGHT OF THE SOCK AND DISPOSED IN THE MANNER DESCRIBED ELSEWHERE ON THE PLAN.
- SOCKS SHALL BE INSPECTED WEEKLY AND AFTER EACH RUNOFF EVENT. DAMAGED SOCKS SHALL BE REPAIRED ACCORDING TO MANUFACTURER'S SPECIFICATIONS OR REPLACED WITHIN 24 HOURS OF INSPECTION.
- BIODEGRADABLE FILTER SOCK SHALL BE REPLACED AFTER 6 MONTHS; PHOTODEGRADABLE SOCKS AFTER 1 YEAR. POLYPROPYLENE SOCKS SHALL BE REPLACED ACCORDING TO MANUFACTURER'S RECOMMENDATIONS.
- UPON STABILIZATION OF THE AREA TRIBUTARY TO THE SOCK, THE STAKES SHALL BE REMOVED. THE SOCK MAY BE LEFT IN PLACE AND VEGETATED OR REMOVED. IN THE LATTER CASE, THE MESH SHALL BE CUT OPEN AND THE MULCH SPREAD AS A SOIL SUPPLEMENT.

COMPOST SHALL MEET THE FOLLOWING STANDARDS:

ORGANIC MATTER CONTENT	25%-100% (DRY WEIGHT BASIS)
ORGANIC PORTION	FIBROUS AND ELONGATED
pH	6.0-8.0
MOISTURE CONTENT	30% - 60%
PARTICLE SIZE	100% PASS 1" SCREEN AND 10.50% PASS THE 3/8" SCREEN
SOLUBLE SALT CONCENTRATION	5.0 dS MAXIMUM

NOTE: COMPOST FILTER SOCK SHALL MEET THE REQUIREMENTS OF THE N.Y.S. EROSION AND SEDIMENT CONTROL STANDARDS AND SPECIFICATIONS.

COMPOST FILTER SOCK DETAIL

4 / C-204 SCALE: N.T.S.

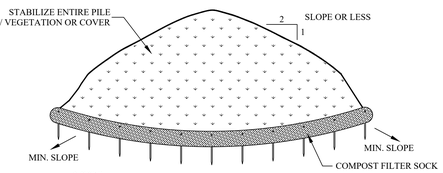

NOTES:

1. AREA CHOSEN FOR STOCKPILING OPERATIONS SHALL BE DRY AND STABILE.
2. MAXIMUM SLOPE OF STOCKPILE SHALL BE 1:2.
3. UPON COMPLETION OF SOIL STOCKPILING, EACH PILE SHALL BE SURROUNDED WITH EITHER COMPOST FILTER SOCK OR STRAWBALES, THEN STABILIZED WITH VEGETATION OR COVERED.
4. SEE DETAILS FOR INSTALLATION OF COMPOST FILTER SOCK.

TEMPORARY STOCKPILE DETAIL

6 / C-204 SCALE: N.T.S.

SEEDING AND MULCHING SPECIFICATIONS:

TEMPORARY STABILIZATION:

SEEDING MIXTURE	RATE (LBS./ACRE)	(LBS./1,000 SQ. FT.)
ANNUAL RYE GRASS	40	1.0
MULCH		
TYPE	**RATE (TONS/ACRE)**	
HAY OR STRAW	3.0	
SOIL PREPARATION		
SOIL AMENDMENT	**RATE**	**(LBS./1,000 SQ. FT.)**
AGRICULTURAL GRADE LIMESTONE	1.0 TONS/ACRE	46
PLUS		
10-20-10 FERTILIZER	50 LBS./ACRE	2

PERMANENT STABILIZATION (UNPAVED AREAS)

SEEDING MIXTURE	% BY WEIGHT	(LBS./1,000 SQ. FT.)
PERENNIAL RYE GRASS	20%	0.8
KENTUCKY BLUEGRASS	80%	3.2
		TOTAL = 4.0 LBS./1,000 SQ. FT.
MULCH		
TYPE	**RATE (TONS/ACRE)**	
HAY OR STRAW	3.0	
SOIL PREPARATION		
SOIL AMENDMENT	**RATE**	**(LBS./1,000 SQ. FT.)**
AGRICULTURAL GRADE LIMESTONE	6.0 TONS/ACRE	275
PLUS		
10-20-10 FERTILIZER	1,000 LBS./ACRE	20

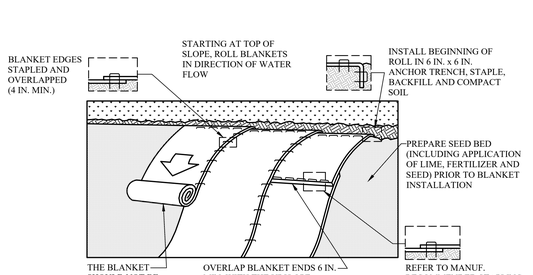

NOTES:

1. SEED AND SOIL AMENDMENTS SHALL BE APPLIED ACCORDING TO THE RATES IN THE PLAN DRAWINGS PRIOR TO INSTALLING THE BLANKET.
2. PROVIDE ANCHOR TRENCH AT TOE OF SLOPE IN SIMILAR FASHION AS AT TOP OF SLOPE.
3. SLOPE SURFACE SHALL BE FREE OF ROCKS, CLODS, STICKS, AND GRASS.
4. BLANKET SHALL HAVE GOOD CONTINUOUS CONTACT WITH UNDERLYING SOIL THROUGHOUT ENTIRE LENGTH. LAY BLANKET LOOSELY AND STAKE OR STAPLE TO MAINTAIN DIRECT CONTACT WITH SOIL. DO NOT STRETCH BLANKET.
5. THE BLANKET SHALL BE STAPLED IN ACCORDANCE WITH THE MANUFACTURER'S RECOMMENDATIONS.
6. BLANKETED AREAS SHALL BE INSPECTED WEEKLY AND AFTER EACH RUNOFF EVENT UNTIL PERENNIAL VEGETATION IS ESTABLISHED TO A MINIMUM UNIFORM 70% COVERAGE THROUGHOUT THE BLANKETED AREA. DAMAGED OR DISPLACED BLANKETS SHALL BE RESTORED OR REPLACED WITHIN 4 CALENDAR DAYS.

EROSION CONTROL BLANKET INSTALLATION

7 / C-204 SCALE: N.T.S.

CONSTRUCTION SEQUENCE:

1. SCHEDULE ON-SITE PRE-CONSTRUCTION MEETING WITH CONTRACTORS, PROJECT ENGINEER AND TOWN OF NEW WINDSOR REPRESENTATIVES AT LEAST ONE WEEK PRIOR TO THE START OF CONSTRUCTION.
2. INSTALL STABILIZED SITE CONSTRUCTION ENTRANCE.
3. INSTALL FILTER SOCKS IN ACCORDANCE WITH THE PLANS AND DETAILS.
4. INSTALL UTILITY LINES AND STABILIZE SURFACE AS SOON AS CONSTRUCTION ALLOWS.
5. INSTALL INLET PROTECTION.
6. BUILDING CONSTRUCTION:
   - Excavate for Building foundation. Excavated material to be stockpiled per the E&S Plan.
   - Pour concrete foundation and slabs, backfill.
   - Excavate and install Precast Retaining Wall.
   - Prepare finish grade around perimeter of building. Stabilize immediately with mulch until building is constructed.
   - Upon completion of building exterior construction, construct permanent site stabilization including jute mesh, topsoil, seed, mulch and fertilizer.
   - Protect Infiltration areas from compaction and sedimentation. Infiltration areas are to be protected from run-off during construction. No run-off should enter the Infiltration areas until the site has been stabilized with grass.
7. EXCAVATE STORMWATER PIPE TRENCHES AND INSTALL STORMWATER OUTLET PIPING. BACKFILL UPON COMPLETION OF PIPE INSTALLATION.
8. PAVE PARKING AREA AND ACCESS DRIVES IN ACCORDANCE WITH THE DETAILS.
9. FINAL GRADING AND APPLY TOPSOIL AS NECESSARY, SEED, FERTILIZER AND MULCH PER SPECIFICATIONS. APPLY JUTE MATTING (PARALLEL WITH FLOW) ON SLOPES AS SHOWN ON THE E&S PLANS TO FACILITATE SOIL STABILIZATION.
10. REMOVE FILTER SOCKS ONLY AFTER ENTIRE PHASE HAS BEEN STABILIZED, VEGETATED AREAS SHALL BE CONSIDERED PERMANENTLY STABILIZED WHEN A UNIFORM 70% VEGETATIVE COVER OF EROSION RESISTANT PERENNIAL SPECIFIED HAS BEEN ACHIEVED, OR THE DISTURBED AREAS ARE COVERED WITH AN ACCEPTABLE BMP WHICH PERMANENTLY MINIMIZE ACCELERATED EROSION AND SEDIMENTATION. UNTIL SUCH TIME AS THIS STANDARD IS ACHIEVED, INTERIM STABILIZATION MEASURES AND TEMPORARY EROSION AND SEDIMENT CONTROL BMPs THAT ARE NOT USED TO TREAT PROJECT RUN-OFF MAY NOT BE REMOVED. DURING PERIODS OF DROUGHT, IRRIGATION SHOULD BE UTILIZED UNTIL STABILIZATION HAS OCCURRED.

MHE ENGINEERING
33 Airport Center Drive, Suite 202
New Windsor, NY 12553
(845) 567-3100
111 Wheatfield Drive, Suite 1
Milford, PA 18337
(570) 296-2765

BID SET

HAZARDOUS MATERIAL NOTE:

THE SERVICES PROVIDED BY MHE, INCLUDING ALL WORK DEPICTED ON MHE PLANS, DO NOT INCLUDE SERVICES RELATED TO THE IDENTIFICATION, CONTROLS OR HANDLING OF HAZARDOUS MATERIALS, INCLUDING SUCH MATERIALS AS ASBESTOS AND LEAD PAINT. ALL TESTING, IDENTIFICATION, ABATEMENT, CONTROLS, AND HANDLING OF HAZARDOUS MATERIALS SHALL BE UNDERTAKEN BY A HAZARDOUS MATERIAL CONSULTANT AND CERTIFIED PROFESSIONALS. IF SUCH MATERIALS HAVE BEEN IDENTIFIED, CONTRACTOR WILL COMMUNICATE DIRECTLY WITH HAZARDOUS MATERIAL PROFESSIONAL FOR THE PERFORMANCE OF ANY WORK ON OR ADJACENT TO SAID MATERIALS. IF UNIDENTIFIED MATERIALS OF CONCERN ARE ENCOUNTERED WHILE UNDERTAKING THE WORK SHOWN HEREON, CONTRACTOR SHALL IMMEDIATELY NOTIFY ENGINEER AND OWNER, AND SHALL OBTAIN DIRECTION FROM THE HAZARDOUS MATERIAL CONSULTANT PRIOR TO THE CONTINUATION OF WORK INVOLVING SUSPECTED MATERIAL.

UDIG·NY SAFE DIGGING STARTS HERE
CALL 811

UNAUTHORIZED ADDITION OR ALTERATION OF THIS PLAN IS A VIOLATION OF SECTION 7209(2) OF THE NEW YORK STATE EDUCATION LAW.

ALL PRODUCTION & INTELLECTUAL PROPERTY RIGHT RESERVED ©

CAESARS LANE WWTP EXPANSION PROJECT: PHASE 1
145 CAESARS LN.
NEW WINDSOR, NY 12553
FOR TOWN OF NEW WINDSOR
555 UNION AVE.
NEW WINDSOR, NY 12553

EROSION & SEDIMENT CONTROL NOTES AND DETAILS

REVISIONS

NO.	DESCRIPTION	DATE

ISSUED DATE:	21 NOV, 2024
DESIGN BY:	MJS
DRAWN BY:	HPBJr
CHECKED BY:	MWW
REVIEWED BY:	**MJL**

SHEET NO.

C-204

PROJECT # 18-732 PHASE # 1

F:\2018\18-732 Caesar Lane WWTP Improvements\Expansion Phase I - CDS\DOs\Plans\Site Plans - Civil\PHASE1 SITE PLAN AND DETAILS.dwg, C-204, 11/21/2024 1:02:48 PM

ACCESSIBILITY CLEARANCES

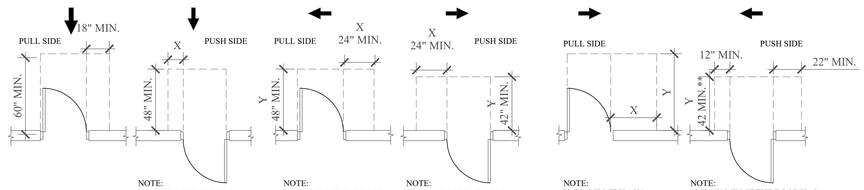

FRONT APPROACHES - SWINGING DOORS

LATCH-SIDE APPROACHES - SWINGING DOORS

HINGE-SIDE APPROACHES - SWINGING DOORS
NOTE: ALL DOORS IN ALCOVES SHALL COMPLY WITH CLEARANCES FOR FRONT APPROACHES

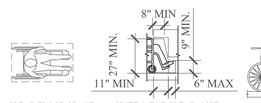

KNEE & TOE CLEARANCE

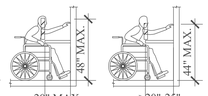

OBSTRUCTED HIGH FORWARD REACH

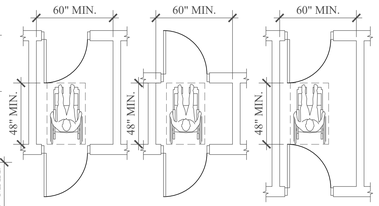

TWO HINGED DOORS IN SERIES

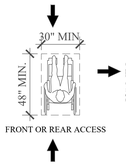

FRONT OR REAR ACCESS

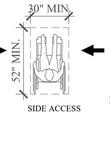

SIDE ACCESS

CLEAR FLOOR SPACE

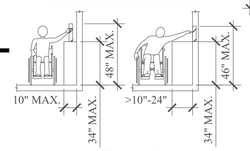

OBSTRUCTED HIGH SIDE REACH

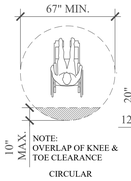

CIRCULAR

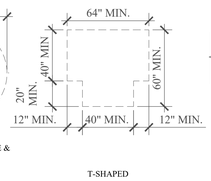

T-SHAPED

ALTERNATE TURNING SPACE

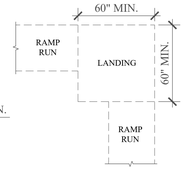

RAMP LANDING AT CHANGE IN DIRECTION

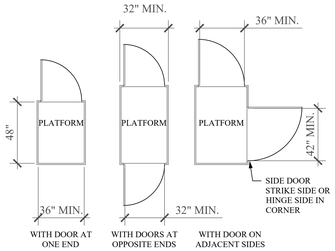

PLATFORM LIFT DOORS AND GATES

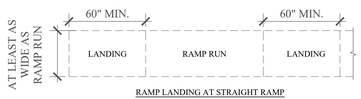

RAMP LANDING AT STRAIGHT RAMP

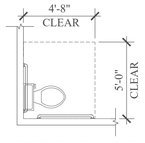

TOILET CLEAR FLOOR SPACE

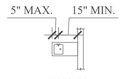

(A) PLAN

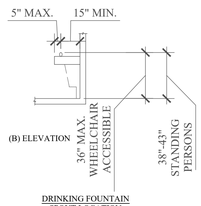

(B) ELEVATION

DRINKING FOUNTAIN SPOUT LOCATION

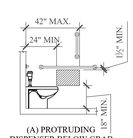

(A) PROTRUDING DISPENSER BELOW GRAB BAR

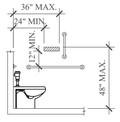

(B) PROTRUDING DISPENSER ABOVE GRAB BAR



HEIGHT OF URINALS

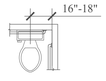

(A) ACCESSIBLE WATER CLOSETS
WATER CLOSET LOCATION

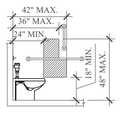

(C) RECESSED DISPENSER

DISPENSER OUTLET LOCATION

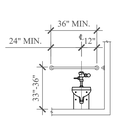

REAR WALL GRAB BAR FOR WATER CLOSET

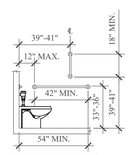

SIDE WALL GRAB BAR FOR WATER CLOSET



HEIGHT OF LAVATORIES AND SINK

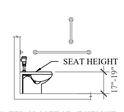

WATER CLOSET SEAT HEIGHT

ABBREVIATIONS

@	AT
ACT	ACOUSTICAL CEILING TILE
ADJ	ADJUSTABLE
A.F.C.	ABOVE FINISHED CEILING
A.F.F.	ABOVE FINISHED FLOOR
AIA	AMERICAN INSTITUTE OF ARCHITECTS
AIEE	AMERICAN INSTITUTE OF ELECTRICAL ENGINEERS
AISC	AMERICAN INSTITUTE OF STEEL CONSTRUCTION
AL., ALUM.	ALUMINUM
ALM	ALARM
ALT	ALTERNATE
AMP	AMPERE
ANSI	AMERICAN NATIONAL STANDARDS INSTITUTE
APT	APARTMENT
APPROX.	APPROXIMATE
ARCH	ARCHITECT
ASHRAE	AMERICAN SOCIETY OF HEATING, REFRIGERATING & AIR CONDITIONING ENGINEERS
ASME	AMERICAN SOCIETY OF MECHANICAL ENGINEERS
ASTM	AMERICAN SOCIETY FOR TESTING AND MATERIALS
AWG	AMERICAN WIRE GAUGE
BD.	BOARD
BL.	BUILDING LINE
BLK	BLOCK
BM	BEAM
B.O.	BY OTHERS
BOT.	BOTTOM
BTU	BRITISH THERMAL UNIT
CAB	CABINET
CB	CATCH BASIN
CLG	CEILING
C.T.	CERAMIC TILE
CFM	CUBIT FEET PER MINUTE
C.H.	CEILING HEIGHT
C.I.	CAST IRON
C.I.M.J.	CAST IRON MECHANICAL JOINT
C.I.P.	CAST IRON PIPE
CL	CENTERLINE
CLKG	CAULKING
CLO	CLOSET
CLR	CLEAR
C.M.P.	CORRUGATED METAL PIPE
CMU	CONCRETE MASONRY UNIT
COL	COLUMN
CONC	CONCRETE
CONST	CONSTRUCTION
CONT	CONTINUOUS
CONTR	CONTRACTOR
CORR	CORRIDOR
COVG	COVERING
CPT	CARPET
CSK	COUNTERSINK
CTR	CENTER
CU FT	CUBIC FEET
CU IN	CUBIC INCHES
CU YD	CUBIC YARD
D	DEPTH
DB	DECIBEL
DBL	DOUBLE
DEMO	DEMOLITION
DEPT	DEPARTMENT
DET., DTL.	DETAIL
D.F.	DRINKING FOUNTAIN
DIA	DIAMETER
DIAG	DIAGONAL
DIM	DIMENSION
D.I.	DUCTILE IRON
D.I.P.	DUCTILE IRON PIPE
DIV	DIVISION
DN	DOWN
DR(S)	DOOR(S)
DRWG, DWG(S)	DRAWING(S)
E.C.	ELECTRICAL CONTRACTOR
ELEV	ELEVATION
ELEC	ELECTRICAL
ENAM	ENAMEL
ENGR	ENGINEER
EQ.	EQUAL
EQUIP	EQUIPMENT
EWC	ELECTRIC WATER COOLER
EXH	EXHAUST
EXTG/EXIST/EX	EXISTING
EXP	EXPOSED
EXTR	EXTRUDED
F.A.	FIRE ALARM
FD	FLOOR DRAIN
F.G.	FINISH GRADE
FH	FULL HEIGHT
FIN.	FINISH
FL., FLR	FLOOR
FT	FOOT
FIG.	FIGURE
FPRF	FIREPROOF
FIXT	FIXTURE
F.P.S.C.	FIREPROOF SELF CLOSING
FT. LB.	FOOT POUND
FTG	FOOTING
GA	GAUGE
GAL	GALLON
GALV	GALVANIZED
GC	GENERAL CONTRACTOR
GL.	GLASS
GPM	GALLONS PER MINUTE
GYP.	GYPSUM
H, HGT	HEIGHT
H..P.E.	HIGH-DENSITY POLYETHYLENE
HDWRE	HARDWARE
H.D.	HOLLOW METAL
HOR., HORZ.	HORIZONTAL
HR	HOUR
H.R.	HANDRAIL
HW	HOT WATER
HYD	HYDRANT
ID	INSIDE DIAMETER
IN	INCH
INCAND	INCANDESCENT
INCL	INCLUDE/INCLUDING
INFO	INFORMATION
INSUL	INSULATION/INSULATING/INSULATE
INT	INTERIOR
INV.	INVERT
JAN	JANITOR
KD	KNOCK DOWN
KO	KNOCK OUT
KW	KILOWATT
L	LENGTH
LAV	LAVATORY
LB	POUND
LH	LEFT HAND
LHR	LEFT HAND REVERSE
LIN	LINEAR
LT	LIGHT
MANUF., MNFR.	MANUFACTURER
MATL.	MATERIAL
MAX.	MAXIMUM
M.C.	MECHANICAL CONTRACTOR
MECH	MECHANICAL
MED	MEDIUM
MEZZ	MEZZANINE
MIN	MINIMUM
MISC	MISCELLANEOUS
M.O.	MASONRY OPENING
MTL	METAL
N	NORTH
NEC	NATIONAL ELECTRICAL CODE
NEMA	NATIONAL ELECTRIC MANUFACTURER'S ASSOCIATION
N.I.C.	NOT IN CONTRACT
NPT	NATIONAL PIPE THREAD
NO.	NUMBER
N.T.S.	NOT TO SCALE
OA	OVERALL
OAD	OVERALL DIMENSION
O.C., O/C	ON CENTER
OD	OUTSIDE DIAMETER
OFF.	OFFICE
PA	PUBLIC ADDRESS
P.C.	PLUMBING CONTRACTOR
PCF	POUNDS PER CUBIC FOOT
PERF	PERFORATED
PL. LAM.	PLASTIC LAMINATE
PLMB	PLUMBING
PLYWD	PLYWOOD
PNL	PANEL
POL	POLISHED
POS	POSITIVE
PSF	POUND PER SQUARE FOOT
PSI	POUND PER SQUARE INCH
PTN	PARTITION
PTD	PAINTED
PTG	PAINTING
PR	PAIR
PROP.	PROPOSED
P.V.C.	POLYVINYL CHLORIDE
QUAL	QUALITY
R	RADIUS
REC(S).	RECOMMENDATION(S)
RECD	RECEIVED
RECP	RECEPTACLE
REF	REFRIGERATOR
REINF.	REINFORCED
RET.	RETAINING
RH	RIGHT HAND
RHR	RIGHT HAND REVERSE
RQD.	REQUIRED
RM(S)	ROOM(S)
SAN.	SANITARY
S/S	STAINLESS STEEL
S.C.	SOLID CORE
SDR	STANDARD DIMENSION RATIO
SECT	SECTION
SEP	SEPARATE
SIM	SIMILAR
S.M.H.	SANITARY MANHOLE
SPEC(S)	SPECIFICATION(S)
SPKR	SPEAKER
SPKLR	SPRINKLER
SQ	SQUARE
SR	SENIOR
STD	STANDARD
STL	STEEL
STRUC	STRUCTURAL
SUPT	SUPERINTENDENT
SUSP	SUSPENDED
T.B.R.	TO BE REMOVED
T.C.	TERRA COTTA
TEL	TELEPHONE
TH, THK	THICK / THICKNESS
TYP	TYPICAL
U.L	UNDERWRITER'S LABORATORIES
U.O.N.	UNLESS OTHERWISE NOTED
VAV	VARIABLE AIR VOLUME
VCT	VINYL COMPOSITE TILE
VERT	VERTICAL
V.I.F.	VERIFY IN FIELD
VS.	VERSUS
VOL	VOLUME
W	WIDTH
W/	WITH
WC	WATER CLOSET
WCV	WALL COVERING
WD	WOOD
W.L.	WATER LINE
W/O	WITHOUT
W.P.	WATERPROOF
WT.	WEIGHT
YD	YARD

SYMBOLS LEGEND

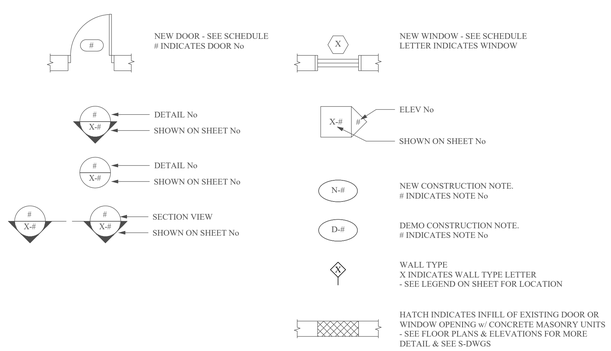

MHE ENGINEERING
33 Airport Center Drive, Suite 202
New Windsor, NY 12553
(845) 567-3100
111 Wheatfield Drive, Suite 1
Milford, PA 18337
(570) 296-2765

BID SET

HAZARDOUS MATERIAL NOTE:
THE SERVICES PROVIDED BY MHE, INCLUDING ALL WORK DEPICTED ON MHE PLANS, DO NOT INCLUDE SERVICES RELATED TO THE IDENTIFICATION, CONTROLS OR HANDLING OF HAZARDOUS MATERIALS, INCLUDING SUCH MATERIALS AS ASBESTOS AND LEAD PAINT. ALL TESTING, IDENTIFICATION, ABATEMENT, CONTROLS, AND HANDLING OF HAZARDOUS MATERIALS SHALL BE UNDERTAKEN BY A HAZARDOUS MATERIAL CONSULTANT AND CERTIFIED PROFESSIONALS. IF SUCH MATERIALS HAVE BEEN IDENTIFIED, CONTRACTOR WILL COMMUNICATE DIRECTLY WITH HAZARDOUS MATERIAL PROFESSIONAL FOR THE PERFORMANCE OF ANY WORK ON OR ADJACENT TO SAID MATERIALS. IF UNIDENTIFIED MATERIALS OF CONCERN ARE ENCOUNTERED WHILE UNDERTAKING THE WORK SHOWN HEREON, CONTRACTOR SHALL IMMEDIATELY NOTIFY ENGINEER AND OWNER, AND SHALL OBTAIN DIRECTION FROM THE HAZARDOUS MATERIAL CONSULTANT PRIOR TO THE CONTINUATION OF WORK INVOLVING SUSPECTED MATERIAL.

UDIG·NY
SAFE DIGGING STARTS HERE
CALL 811

UNAUTHORIZED ADDITION OR ALTERATION OF THIS PLAN IS A VIOLATION OF SECTION 7209(2) OF THE NEW YORK STATE EDUCATION LAW.

ALL PRODUCTION & INTELLECTUAL PROPERTY RIGHT RESERVED ©

CAESARS LANE WWTP EXPANSION PROJECT: PHASE 1
145 CAESARS LN.
NEW WINDSOR, NY 12553
FOR TOWN OF NEW WINDSOR
555 UNION AVE.
NEW WINDSOR, NY 12553

ADA CLEARANCES, ABBREVIATIONS & LEGEND

REVISIONS

NO.	DESCRIPTION	DATE

ISSUED DATE:	21 NOV, 2024
DESIGN BY:	AW
DRAWN BY:	EDIII
CHECKED BY:	AW
REVIEWED BY:	JZ, ML
SHEET NO.	

G-001

PROJECT # 18-732 PHASE # 1

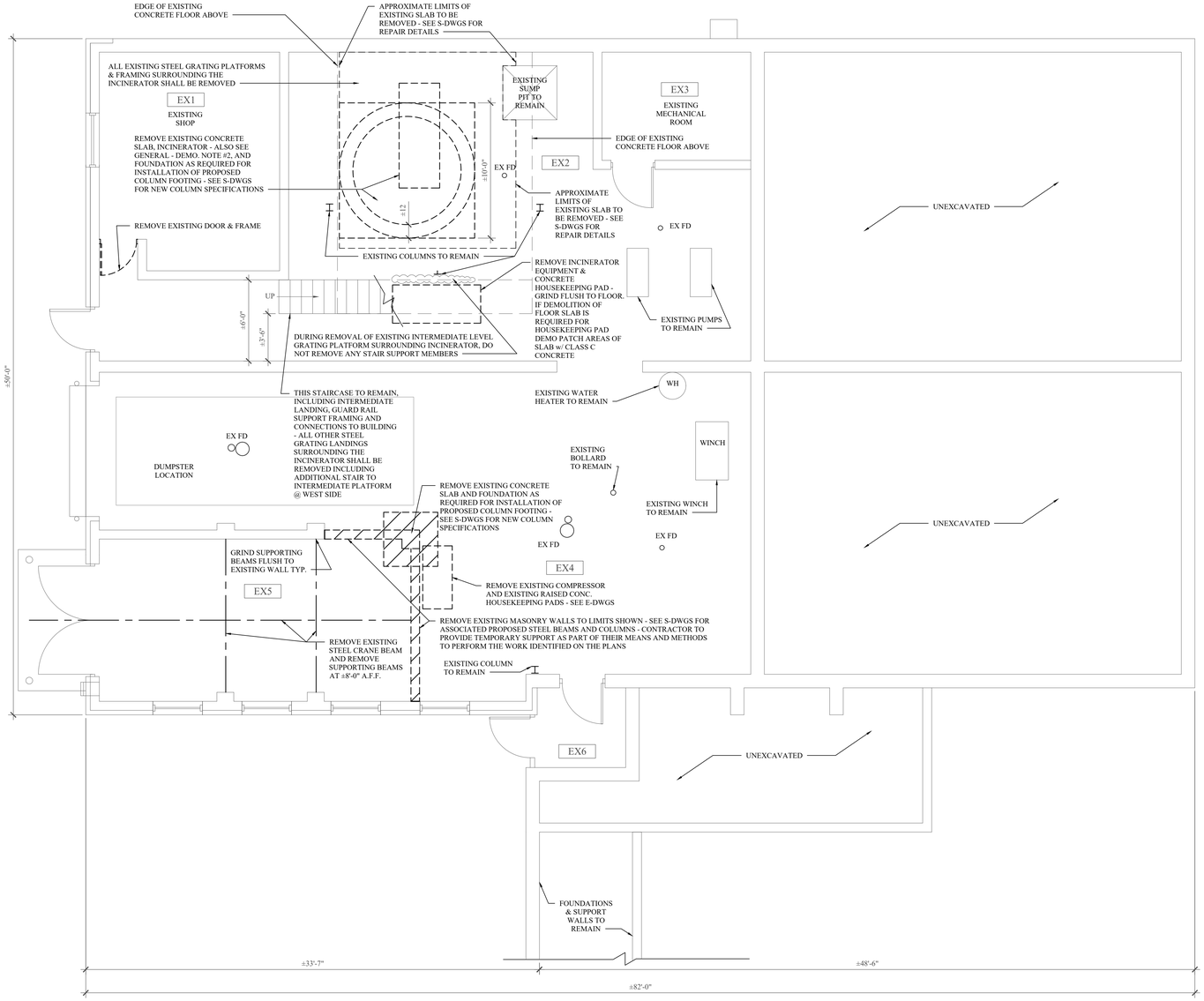

1 AD-701 LOWER LEVEL DEMOLITION PLAN
SCALE: 1/4" = 1'-0"

PROJECT NORTH TRUE NORTH

GENERAL - DEMOLITION NOTES

1 - SEE EXHIBIT 'A' HAZARDOUS MATERIALS REPORT FOR FURTHER INFORMATION

2 - SEE EXHIBIT 'A-1' FOR ASBESTOS ABATEMENT SPEC AND LEAD SAFE WORK PRACTICES SPEC AND ADHERE TO ALL REQUIREMENTS FOR SPECIFIED REMOVALS

3 - SEE EXHIBIT 'A-2' DRAWING AA-101 & AA-102 FOR FURTHER INFORMATION

4 - EXISTING INCINERATOR STRUCTURE CONSISTS OF ±1" THICK STEEL CASING ALONG w/ ±12" FIRE BRICK INTERIOR LAYER - THE EXISTING STRUCTURE SHALL BE REMOVED IN IT'S ENTIRETY INCLUDING IT'S BASE PAD ON THE GROUND FLOOR, ALL ASSOCIATED PIPING, CONDUIT, WIRING, & ROOF PENETRATIONS INCLUDING THE FOUNDATION BOTH ABOVE AND BELOW GRADE - EXCAVATED AREA TO BE BACKFILLED IN CONTROLLED COMPACTED LIFTS USING APPROVED MATERIAL

5 - REMOVE METAL STAIRS, PLATFORMS & RAILINGS AROUND EXISTING INCINERATOR INCLUDING ALL ATTACHMENTS TO BUILDING U.O.N.

6 - CONTRACTOR SHALL PROVIDE ADEQUATE CONTAINMENT MEASURES TO SHIELD ACTIVE AREAS OF PLANT OPERATION (I.E. EXISTING BELT PRESS AREA) DURING INCINERATOR AND ROOF DEMOLITION

7 - CONTRACTOR TO BUILD ANY TEMPORARY WALLS & BARRIERS REQUIRED TO NOT HINDER OR IN ANYWAY DISRUPT ACTIVE PLANT OPERATIONS DURING DEMOLITION WORK

8 - CONTRACTOR TO MAINTAIN WEATHER PROOF ENCLOSURE DURING







EXISTING INCINERATOR PHOTOS
SCALE: N.T.S

LEGEND

DOOR & FRAME TO BE REMOVED

EXISTING TO BE REMOVED

EXISTING TO REMAIN

MHE ENGINEERING
33 Airport Center Drive, Suite 202
New Windsor, NY 12553
(845) 567-3100
111 Wheatfield Drive, Suite 1
Milford, PA 18337
(570) 296-2765

BID SET

HAZARDOUS MATERIAL NOTE:
THE SERVICES PROVIDED BY MHE, INCLUDING ALL WORK DEPICTED ON MHE PLANS, DO NOT INCLUDE SERVICES RELATED TO THE IDENTIFICATION, CONTROLS OR HANDLING OF HAZARDOUS MATERIALS, INCLUDING SUCH MATERIALS AS ASBESTOS AND LEAD PAINT. ALL TESTING, IDENTIFICATION, ABATEMENT, CONTROLS, AND HANDLING OF HAZARDOUS MATERIALS SHALL BE UNDERTAKEN BY A HAZARDOUS MATERIAL CONSULTANT AND CERTIFIED PROFESSIONALS. IF SUCH MATERIALS HAVE BEEN IDENTIFIED, CONTRACTOR WILL COMMUNICATE DIRECTLY WITH HAZARDOUS MATERIAL PROFESSIONAL FOR THE PERFORMANCE OF ANY WORK ON OR ADJACENT TO SAID MATERIALS. IF UNIDENTIFIED MATERIALS OF CONCERN ARE ENCOUNTERED WHILE UNDERTAKING THE WORK SHOWN HEREON, CONTRACTOR SHALL IMMEDIATELY NOTIFY ENGINEER AND OWNER, AND SHALL OBTAIN DIRECTION FROM THE HAZARDOUS MATERIAL CONSULTANT PRIOR TO THE CONTINUATION OF WORK INVOLVING SUSPECTED MATERIAL.

UDIG·NY SAFE DIGGING STARTS HERE
CALL 811

UNAUTHORIZED ADDITION OR ALTERATION OF THIS PLAN IS A VIOLATION OF SECTION 7209(2) OF THE NEW YORK STATE EDUCATION LAW.

ALL PRODUCTION & INTELLECTUAL PROPERTY RIGHT RESERVED ©

CAESARS LANE WWTP EXPANSION PROJECT: PHASE 1
145 CAESARS LN.
NEW WINDSOR, NY 12553
FOR TOWN OF NEW WINDSOR
555 UNION AVE.
NEW WINDSOR, NY 12553

DEWATERING BUILDING - LOWER LEVEL DEMOLITION PLAN, EXISTING INCINERATOR PHOTOS & NOTES

REVISIONS

NO.	DESCRIPTION	DATE

ISSUED DATE:	21 NOV, 2024
DESIGN BY:	AW
DRAWN BY:	EDIII
CHECKED BY:	AW
REVIEWED BY:	JZ, ML

SHEET NO.
AD-701

PROJECT # 18-732 PHASE # 1

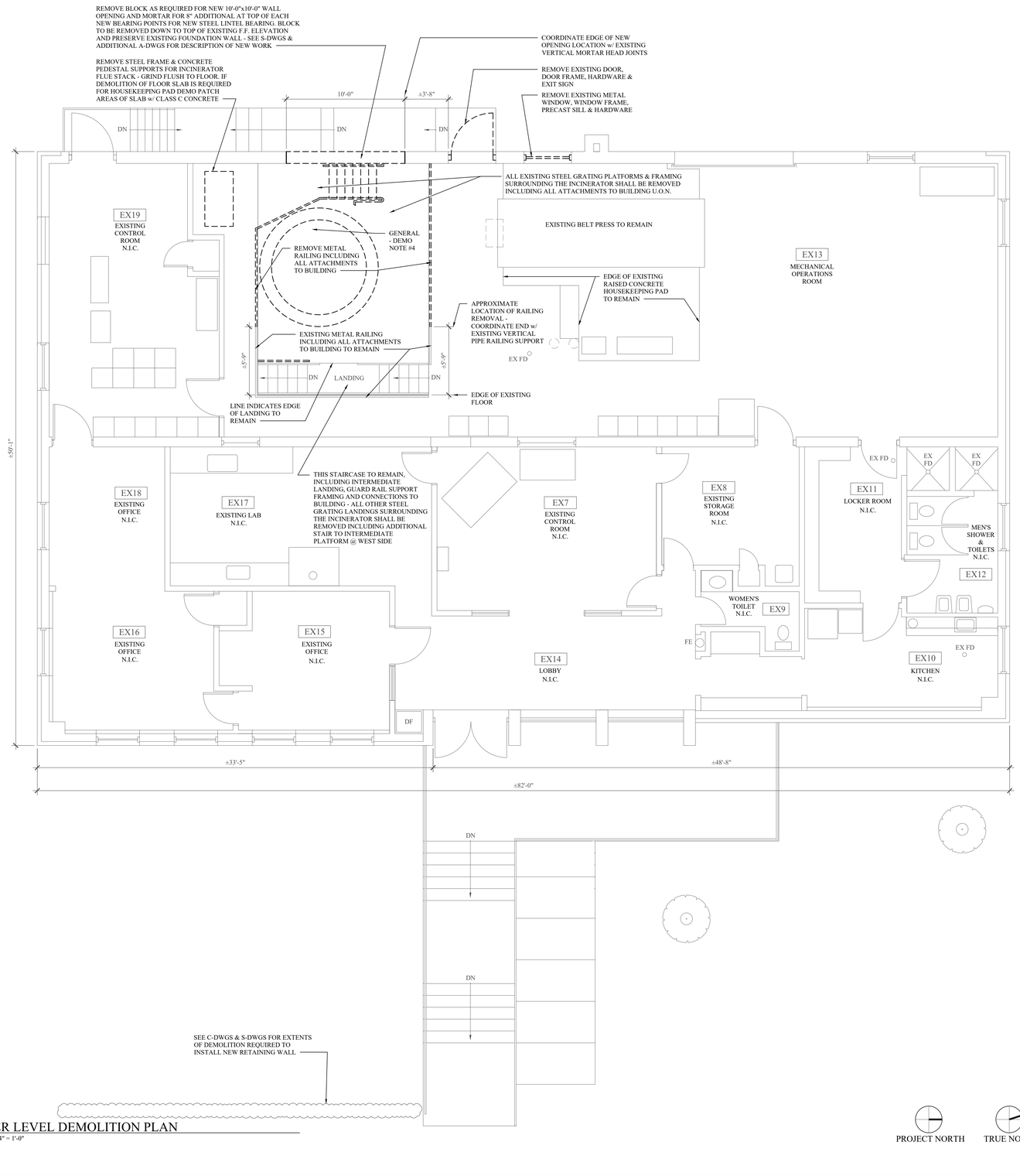

1 AD-702 UPPER LEVEL DEMOLITION PLAN
SCALE: 1/4" = 1'-0"

PROJECT NORTH

TRUE NORTH

LEGEND

DOOR & FRAME TO BE REMOVED

EXISTING TO BE REMOVED

EXISTING TO REMAIN

GENERAL - DEMOLITION NOTES

1 - SEE EXHIBIT 'A' HAZARDOUS MATERIALS REPORT FOR FURTHER INFORMATION

2 - SEE EXHIBIT 'A-1' FOR ASBESTOS ABATEMENT SPEC AND LEAD SAFE WORK PRACTICES SPEC AND ADHERE TO ALL REQUIREMENTS FOR SPECIFIED REMOVALS

3 - SEE EXHIBIT 'A-2' DRAWING AA-101 & AA-102 FOR FURTHER INFORMATION

4 - EXISTING INCINERATOR STRUCTURE CONSISTS OF ±1" THICK STEEL CASING ALONG w/ ±12" FIRE BRICK INTERIOR LAYER - THE EXISTING STRUCTURE SHALL BE REMOVED IN IT'S ENTIRETY INCLUDING IT'S BASE PAD ON THE GROUND FLOOR, ALL ASSOCIATED PIPING, CONDUIT, WIRING, & ROOF PENETRATIONS INCLUDING THE FOUNDATION BOTH ABOVE AND BELOW GRADE - EXCAVATED AREA TO BE BACKFILLED IN CONTROLLED COMPACTED LIFTS USING APPROVED MATERIAL

5 - REMOVE METAL STAIRS, PLATFORMS & RAILINGS AROUND EXISTING INCINERATOR INCLUDING ALL ATTACHMENTS TO BUILDING U.O.N.

6 - CONTRACTOR SHALL PROVIDE ADEQUATE CONTAINMENT MEASURES TO SHIELD ACTIVE AREAS OF PLANT OPERATION (I.E. EXISTING BELT PRESS AREA) DURING INCINERATOR AND ROOF DEMOLITION

7 - CONTRACTOR TO BUILD ANY TEMPORARY WALLS & BARRIERS REQUIRED TO NOT HINDER OR IN ANYWAY DISRUPT ACTIVE PLANT OPERATIONS DURING DEMOLITION WORK

8 - CONTRACTOR TO MAINTAIN WEATHER PROOF ENCLOSURE DURING DEMOLITION TO NOT HINDER OR IN ANYWAY DISRUPT ACTIVE PLANT OPERATIONS DURING DEMOLITION WORK

MHE ENGINEERING
33 Airport Center Drive, Suite 202
New Windsor, NY 12553
(845) 567-3100
111 Wheatfield Drive, Suite 1
Milford, PA 18337
(570) 296-2765

BID SET

HAZARDOUS MATERIAL NOTE:

THE SERVICES PROVIDED BY MHE, INCLUDING ALL WORK DEPICTED ON MHE PLANS, DO NOT INCLUDE SERVICES RELATED TO THE IDENTIFICATION, CONTROLS OR HANDLING OF HAZARDOUS MATERIALS, INCLUDING SUCH MATERIALS AS ASBESTOS AND LEAD PAINT. ALL TESTING, IDENTIFICATION, ABATEMENT, CONTROLS, AND HANDLING OF HAZARDOUS MATERIALS SHALL BE UNDERTAKEN BY A HAZARDOUS MATERIAL CONSULTANT AND CERTIFIED PROFESSIONALS. IF SUCH MATERIALS HAVE BEEN IDENTIFIED, CONTRACTOR WILL COMMUNICATE DIRECTLY WITH HAZARDOUS MATERIAL PROFESSIONAL FOR THE PERFORMANCE OF ANY WORK ON OR ADJACENT TO SAID MATERIALS. IF UNIDENTIFIED MATERIALS OF CONCERN ARE ENCOUNTERED WHILE UNDERTAKING THE WORK SHOWN HEREON, CONTRACTOR SHALL IMMEDIATELY NOTIFY ENGINEER AND OWNER, AND SHALL OBTAIN DIRECTION FROM THE HAZARDOUS MATERIAL CONSULTANT PRIOR TO THE CONTINUATION OF WORK INVOLVING SUSPECTED MATERIAL.

UDIG·NY SAFE DIGGING STARTS HERE
CALL 811

UNAUTHORIZED ADDITION OR ALTERATION OF THIS PLAN IS A VIOLATION OF SECTION 7209(2) OF THE NEW YORK STATE EDUCATION LAW.

ALL PRODUCTION & INTELLECTUAL PROPERTY RIGHT RESERVED ©

CAESARS LANE WWTP EXPANSION PROJECT: PHASE 1
145 CAESARS LN.
NEW WINDSOR, NY 12553
FOR TOWN OF NEW WINDSOR
555 UNION AVE.
NEW WINDSOR, NY 12553

DEWATERING BUILDING - UPPER LEVEL DEMOLITION PLAN & NOTES

REVISIONS

NO.	DESCRIPTION	DATE

ISSUED DATE:	21 NOV, 2024
DESIGN BY:	AW
DRAWN BY:	EDIII
CHECKED BY:	AW
REVIEWED BY:	JZ, ML

SHEET NO.

AD-702

PROJECT # 18-732 PHASE # 1

GENERAL - DEMOLITION NOTES

1 - SEE EXHIBIT 'A' HAZARDOUS MATERIALS REPORT FOR FURTHER INFORMATION

2 - SEE EXHIBIT 'A-1' FOR ASBESTOS ABATEMENT SPEC AND LEAD SAFE WORK PRACTICES SPEC AND ADHERE TO ALL REQUIREMENTS FOR SPECIFIED REMOVALS

3 - SEE EXHIBIT 'A-2' DRAWING AA-101 & AA-102 FOR FURTHER INFORMATION

4 - EXISTING INCINERATOR STRUCTURE CONSISTS OF ±1" THICK STEEL CASING ALONG w/ ±12" FIRE BRICK INTERIOR LAYER - THE EXISTING STRUCTURE SHALL BE REMOVED IN IT'S ENTIRETY INCLUDING IT'S BASE PAD ON THE GROUND FLOOR, ALL ASSOCIATED PIPING, CONDUIT, WIRING, & ROOF PENETRATIONS INCLUDING THE FOUNDATION BOTH ABOVE AND BELOW GRADE - EXCAVATED AREA TO BE BACKFILLED IN CONTROLLED COMPACTED LIFTS USING APPROVED MATERIAL

5 - REMOVE METAL STAIRS, PLATFORMS & RAILINGS AROUND EXISTING INCINERATOR INCLUDING ALL ATTACHMENTS TO BUILDING U.O.N.

6 - CONTRACTOR SHALL PROVIDE ADEQUATE CONTAINMENT MEASURES TO SHIELD ACTIVE AREAS OF PLANT OPERATION (I.E. EXISTING BELT PRESS AREA) DURING INCINERATOR AND ROOF DEMOLITION

7 - CONTRACTOR TO BUILD ANY TEMPORARY WALLS & BARRIERS REQUIRED TO NOT HINDER OR IN ANYWAY DISRUPT ACTIVE PLANT OPERATIONS DURING DEMOLITION WORK

8 - CONTRACTOR TO MAINTAIN WEATHER PROOF ENCLOSURE DURING DEMOLITION TO NOT HINDER OR IN ANYWAY DISRUPT ACTIVE PLANT OPERATIONS DURING DEMOLITION WORK

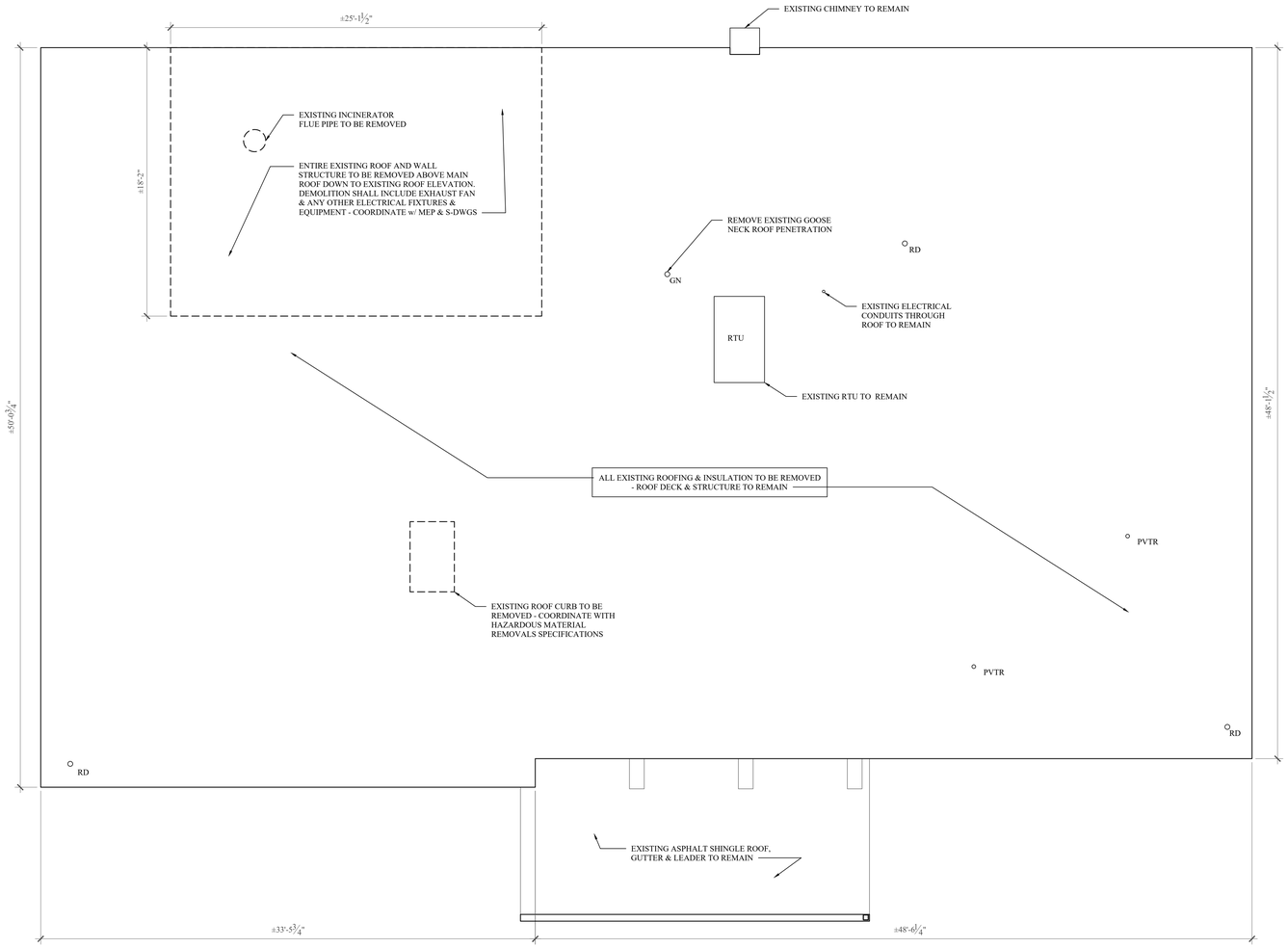

GENERAL - ROOF PLAN NOTES

- ALL EXISTING PLUMBING PIPE PENETRATION LOCATIONS THROUGH ROOF TO REMAIN U.O.N. - SEE P-DWGS
- EXISTING PVTR PIPE LOCATION TO REMAIN U.O.N. - SEE P-DWGS
- EXISTING ROOF DRAIN BODY TO BE REMOVED AND REPLACED IN SAME EXISTING PIPING LOCATION U.O.N. - SEE DETAILS ON A-703 & SEE P-DWGS

RD - ROOF DRAIN
PVTR - PLUMBING VENT THROUGH ROOF
RV - ROOF VENT
RS - ROOF SCUPPER
RCEF - ROOF CURB WITH EXHAUST FANS
GN - GOOSE NECK EXHAUST
RTU - ROOF TOP UNIT

1 AD-703 ROOF DEMOLITION PLAN
SCALE: 1/4" = 1'-0"

PROJECT NORTH TRUE NORTH

LEGEND
EXISTING TO BE REMOVED
EXISTING TO REMAIN

MHE ENGINEERING
33 Airport Center Drive, Suite 202
New Windsor, NY 12553
(845) 567-3100
111 Wheatfield Drive, Suite 1
Milford, PA 18337
(570) 296-2765

BID SET

HAZARDOUS MATERIAL NOTE:
THE SERVICES PROVIDED BY MHE, INCLUDING ALL WORK DEPICTED ON MHE PLANS, DO NOT INCLUDE SERVICES RELATED TO THE IDENTIFICATION, CONTROLS OR HANDLING OF HAZARDOUS MATERIALS, INCLUDING SUCH MATERIALS AS ASBESTOS AND LEAD PAINT. ALL TESTING, IDENTIFICATION, ABATEMENT, CONTROLS, AND HANDLING OF HAZARDOUS MATERIALS SHALL BE UNDERTAKEN BY A HAZARDOUS MATERIAL CONSULTANT AND CERTIFIED PROFESSIONALS. IF SUCH MATERIALS HAVE BEEN IDENTIFIED, CONTRACTOR WILL COMMUNICATE DIRECTLY WITH HAZARDOUS MATERIAL PROFESSIONAL FOR THE PERFORMANCE OF ANY WORK ON OR ADJACENT TO SAID MATERIALS. IF UNIDENTIFIED MATERIALS OF CONCERN ARE ENCOUNTERED WHILE UNDERTAKING THE WORK SHOWN HEREON, CONTRACTOR SHALL IMMEDIATELY NOTIFY ENGINEER AND OWNER, AND SHALL OBTAIN DIRECTION FROM THE HAZARDOUS MATERIAL CONSULTANT PRIOR TO THE CONTINUATION OF WORK INVOLVING SUSPECTED MATERIAL.

UDIG·NY SAFE DIGGING STARTS HERE
CALL 811

UNAUTHORIZED ADDITION OR ALTERATION OF THIS PLAN IS A VIOLATION OF SECTION 7209(2) OF THE NEW YORK STATE EDUCATION LAW.

ALL PRODUCTION & INTELLECTUAL PROPERTY RIGHT RESERVED ©

CAESARS LANE WWTP EXPANSION PROJECT: PHASE 1
145 CAESARS LN.
NEW WINDSOR, NY 12553
FOR TOWN OF NEW WINDSOR
555 UNION AVE.
NEW WINDSOR, NY 12553

DEWATERING BUILDING - ROOF DEMOLITION PLAN & NOTES

REVISIONS

NO.	DESCRIPTION	DATE

ISSUED DATE:	21 NOV, 2024
DESIGN BY:	AW
DRAWN BY:	EDIII
CHECKED BY:	AW
REVIEWED BY:	JZ, ML

SHEET NO.
AD-703

PROJECT # 18-732 PHASE # 1

GENERAL - DEMOLITION NOTES

1 - SEE EXHIBIT 'A' HAZARDOUS MATERIALS REPORT FOR FURTHER INFORMATION

2 - SEE EXHIBIT 'A-1' FOR ASBESTOS ABATEMENT SPEC AND LEAD SAFE WORK PRACTICES SPEC AND ADHERE TO ALL REQUIREMENTS FOR SPECIFIED REMOVALS

3 - SEE EXHIBIT 'A-2' DRAWING AA-101 & AA-102 FOR FURTHER INFORMATION

4 - EXISTING INCINERATOR STRUCTURE CONSISTS OF ±1" THICK STEEL CASING ALONG w/ ±12" FIRE BRICK INTERIOR LAYER - THE EXISTING STRUCTURE SHALL BE REMOVED IN IT'S ENTIRETY INCLUDING IT'S BASE PAD ON THE GROUND FLOOR, ALL ASSOCIATED PIPING, CONDUIT, WIRING, & ROOF PENETRATIONS INCLUDING THE FOUNDATION BOTH ABOVE AND BELOW GRADE - EXCAVATED AREA TO BE BACKFILLED IN CONTROLLED COMPACTED LIFTS USING APPROVED MATERIAL

5 - REMOVE METAL STAIRS, PLATFORMS & RAILINGS AROUND EXISTING INCINERATOR INCLUDING ALL ATTACHMENTS TO BUILDING U.O.N.

6 - CONTRACTOR SHALL PROVIDE ADEQUATE CONTAINMENT MEASURES TO SHIELD ACTIVE AREAS OF PLANT OPERATION (I.E. EXISTING BELT PRESS AREA) DURING INCINERATOR AND ROOF DEMOLITION

7 - CONTRACTOR TO BUILD ANY TEMPORARY WALLS & BARRIERS REQUIRED TO NOT HINDER OR IN ANYWAY DISRUPT ACTIVE PLANT OPERATIONS DURING DEMOLITION WORK

8 - CONTRACTOR TO MAINTAIN WEATHER PROOF ENCLOSURE DURING DEMOLITION TO NOT HINDER OR IN ANYWAY DISRUPT ACTIVE PLANT OPERATIONS DURING DEMOLITION WORK



PHOTO AT SOUTH SIDE
SCALE: N.T.S

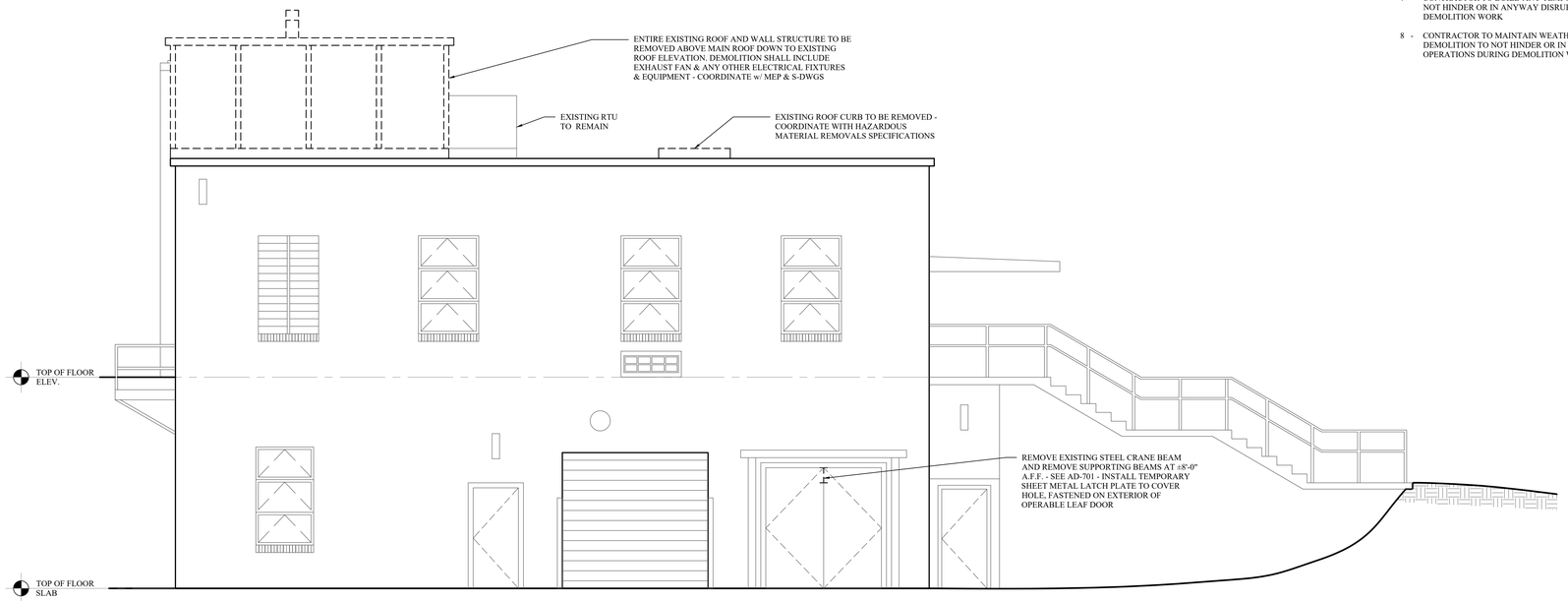

1 AD-704 SOUTH ELEVATION
SCALE: 1/4" = 1'-0"



PHOTO AT WEST SIDE
SCALE: N.T.S

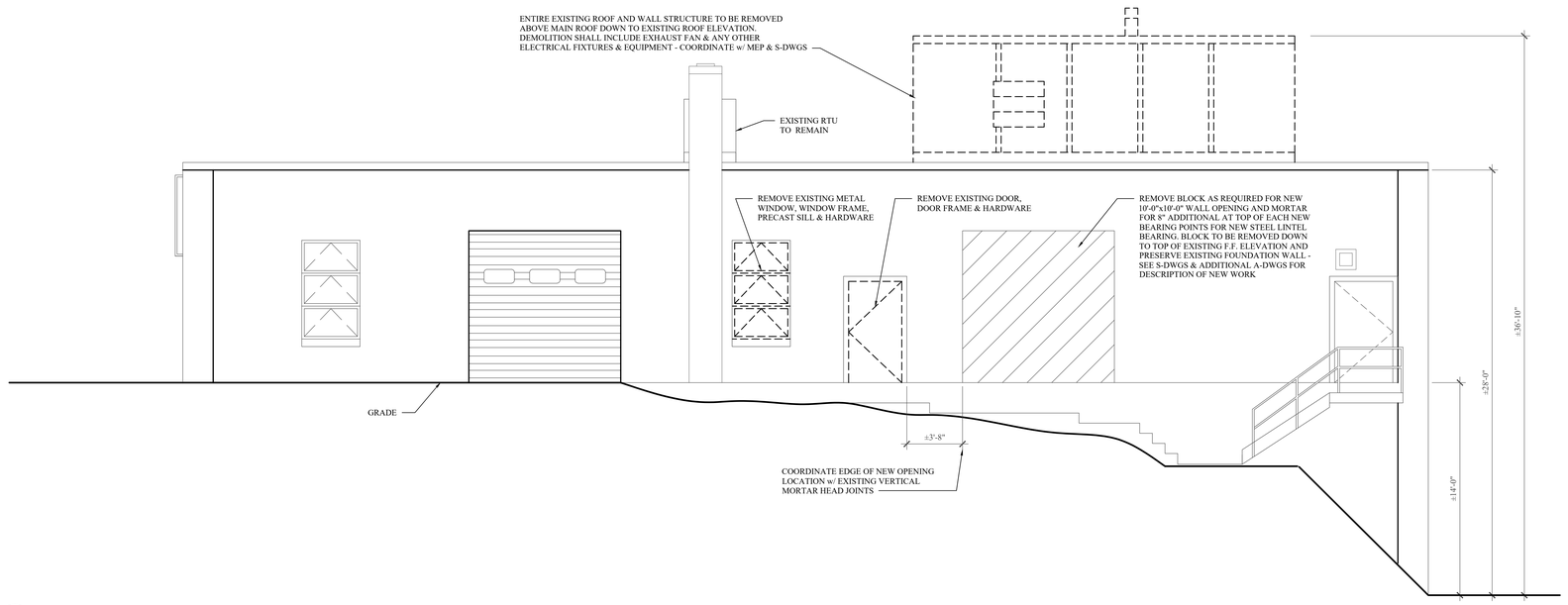

2 AD-704 WEST ELEVATION
SCALE: 1/4" = 1'-0"

LEGEND

EXISTING TO BE REMOVED

EXISTING TO REMAIN

ENGINEERING

33 Airport Center Drive, Suite 202
New Windsor, NY 12553
(845) 567-3100

111 Wheatfield Drive, Suite 1
Milford, PA 18337
(570) 296-2765

BID SET

HAZARDOUS MATERIAL NOTE:

THE SERVICES PROVIDED BY MHE, INCLUDING ALL WORK DEPICTED ON MHE PLANS, DO NOT INCLUDE SERVICES RELATED TO THE IDENTIFICATION, CONTROLS OR HANDLING OF HAZARDOUS MATERIALS, INCLUDING SUCH MATERIALS AS ASBESTOS AND LEAD PAINT. ALL TESTING, IDENTIFICATION, ABATEMENT, CONTROLS, AND HANDLING OF HAZARDOUS MATERIALS SHALL BE UNDERTAKEN BY A HAZARDOUS MATERIAL CONSULTANT AND CERTIFIED PROFESSIONALS. IF SUCH MATERIALS HAVE BEEN IDENTIFIED, CONTRACTOR WILL COMMUNICATE DIRECTLY WITH HAZARDOUS MATERIAL PROFESSIONAL FOR THE PERFORMANCE OF ANY WORK ON OR ADJACENT TO SAID MATERIALS. IF UNIDENTIFIED MATERIALS OF CONCERN ARE ENCOUNTERED WHILE UNDERTAKING THE WORK SHOWN HEREON, CONTRACTOR SHALL IMMEDIATELY NOTIFY ENGINEER AND OWNER, AND SHALL OBTAIN DIRECTION FROM THE HAZARDOUS MATERIAL CONSULTANT PRIOR TO THE CONTINUATION OF WORK INVOLVING SUSPECTED MATERIAL.

UDIG·NY
SAFE DIGGING STARTS HERE
CALL 811

UNAUTHORIZED ADDITION OR ALTERATION OF THIS PLAN IS A VIOLATION OF SECTION 7209(2) OF THE NEW YORK STATE EDUCATION LAW.

ALL PRODUCTION & INTELLECTUAL PROPERTY RIGHT RESERVED ©

CAESARS LANE WWTP EXPANSION PROJECT: PHASE 1
145 CAESARS LN.
NEW WINDSOR, NY 12553
FOR TOWN OF NEW WINDSOR
555 UNION AVE.
NEW WINDSOR, NY 12553

DEWATERING BUILDING - EXTERIOR ELEVATIONS DEMOLITION, PHOTOS & NOTES

REVISIONS

NO.	DESCRIPTION	DATE

ISSUED DATE:	21 NOV, 2024
DESIGN BY:	AW
DRAWN BY:	EDIII
CHECKED BY:	AW
REVIEWED BY:	JZ, ML

SHEET NO.

AD-704

PROJECT # 18-732 PHASE # 1

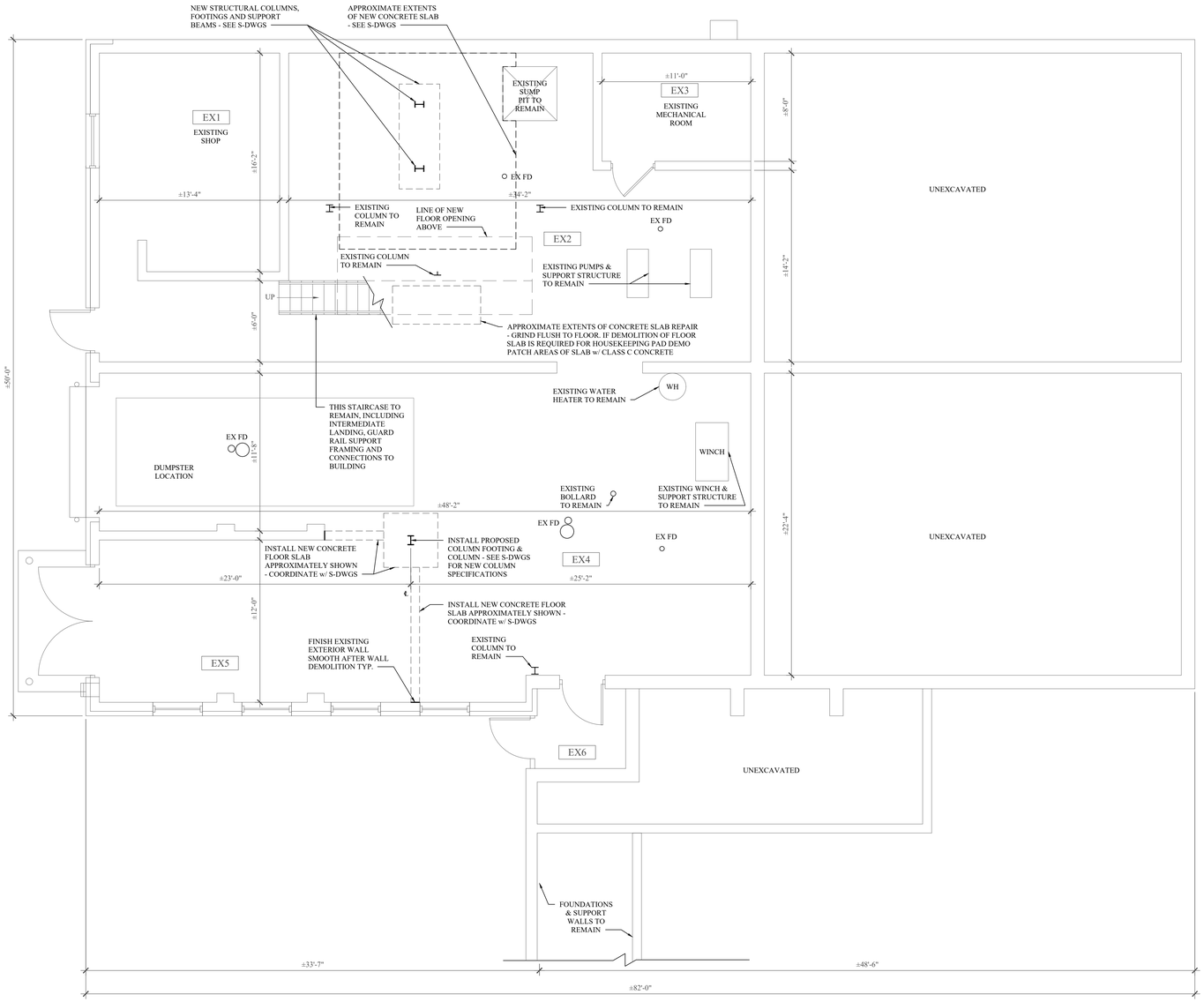

1 A-701 PROPOSED LOWER LEVEL FLOOR PLAN
SCALE: 1/4" = 1'-0"

PROJECT NORTH TRUE NORTH

ENGINEERING
33 Airport Center Drive, Suite 202
New Windsor, NY 12553
(845) 567-3100
111 Wheatfield Drive, Suite 1
Milford, PA 18337
(570) 296-2765

BID SET

HAZARDOUS MATERIAL NOTE:

THE SERVICES PROVIDED BY MHE, INCLUDING ALL WORK DEPICTED ON MHE PLANS, DO NOT INCLUDE SERVICES RELATED TO THE IDENTIFICATION, CONTROLS OR HANDLING OF HAZARDOUS MATERIALS, INCLUDING SUCH MATERIALS AS ASBESTOS AND LEAD PAINT. ALL TESTING, IDENTIFICATION, ABATEMENT, CONTROLS, AND HANDLING OF HAZARDOUS MATERIALS SHALL BE UNDERTAKEN BY A HAZARDOUS MATERIAL CONSULTANT AND CERTIFIED PROFESSIONALS. IF SUCH MATERIALS HAVE BEEN IDENTIFIED, CONTRACTOR WILL COMMUNICATE DIRECTLY WITH HAZARDOUS MATERIAL PROFESSIONAL FOR THE PERFORMANCE OF ANY WORK ON OR ADJACENT TO SAID MATERIALS. IF UNIDENTIFIED MATERIALS OF CONCERN ARE ENCOUNTERED WHILE UNDERTAKING THE WORK SHOWN HEREON, CONTRACTOR SHALL IMMEDIATELY NOTIFY ENGINEER AND OWNER, AND SHALL OBTAIN DIRECTION FROM THE HAZARDOUS MATERIAL CONSULTANT PRIOR TO THE CONTINUATION OF WORK INVOLVING SUSPECTED MATERIAL.

UDIG·NY SAFE DIGGING STARTS HERE
CALL 811

UNAUTHORIZED ADDITION OR ALTERATION OF THIS PLAN IS A VIOLATION OF SECTION 7209(2) OF THE NEW YORK STATE EDUCATION LAW.

ALL PRODUCTION & INTELLECTUAL PROPERTY RIGHT RESERVED ©

CAESARS LANE WWTP EXPANSION PROJECT: PHASE 1
145 CAESARS LN.
NEW WINDSOR, NY 12553
FOR TOWN OF NEW WINDSOR
555 UNION AVE.
NEW WINDSOR, NY 12553

DEWATERING BUILDING - LOWER LEVEL FLOOR PLAN

REVISIONS

NO.	DESCRIPTION	DATE

ISSUED DATE:	21 NOV, 2024
DESIGN BY:	AW
DRAWN BY:	EDIII
CHECKED BY:	AW
REVIEWED BY:	JZ, ML

SHEET NO.

A-701

PROJECT # 18-732 PHASE # 1

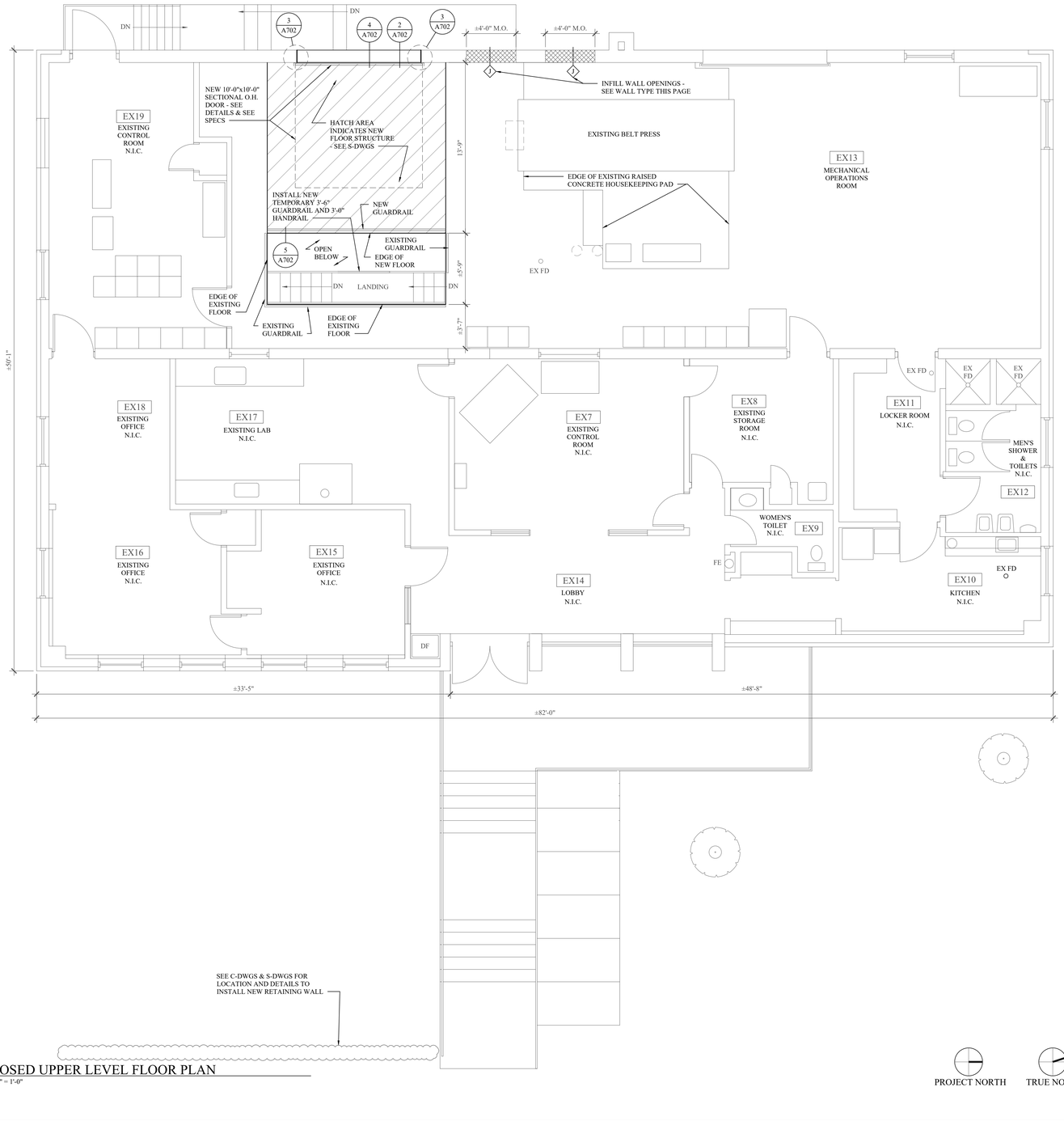

1 A-702 PROPOSED UPPER LEVEL FLOOR PLAN
SCALE: 1/4" = 1'-0"

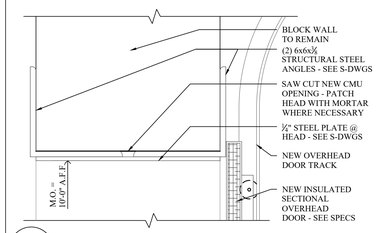

2 A-702 SECTIONAL O.H. DOOR - HEAD DETAIL
SCALE: 3" = 1'-0"

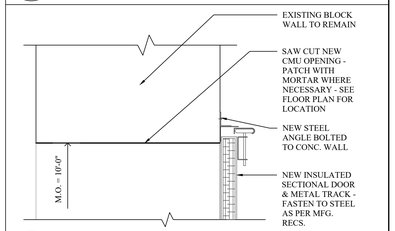

3 A-702 SECTIONAL O.H. DOOR - JAMB DETAIL
SCALE: 3" = 1'-0"

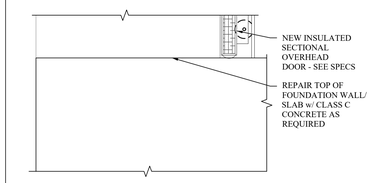

4 A-702 SECTIONAL O.H. DOOR - SILL DETAIL
SCALE: 3" = 1'-0"

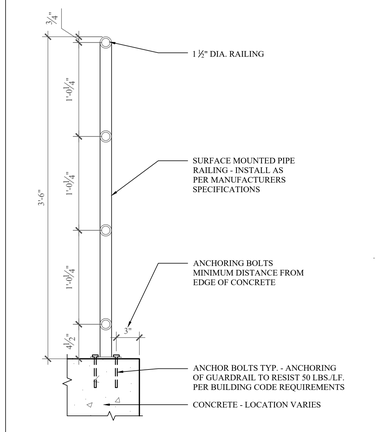

5 A-702 SURFACE MOUNTED GUARDRAIL DTL.
SCALE: 1-1/2" = 1'-0"

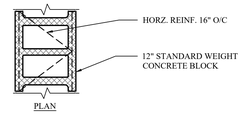

J EXTERIOR WALL TYPE
SCALE: 1" = 1'-0"

MHE ENGINEERING
33 Airport Center Drive, Suite 202
New Windsor, NY 12553
(845) 567-3100
111 Wheatfield Drive, Suite 1
Milford, PA 18337
(570) 296-2765

BID SET

HAZARDOUS MATERIAL NOTE:
THE SERVICES PROVIDED BY MHE, INCLUDING ALL WORK DEPICTED ON MHE PLANS, DO NOT INCLUDE SERVICES RELATED TO THE IDENTIFICATION, CONTROLS OR HANDLING OF HAZARDOUS MATERIALS, INCLUDING SUCH MATERIALS AS ASBESTOS AND LEAD PAINT. ALL TESTING, IDENTIFICATION, ABATEMENT, CONTROLS, AND HANDLING OF HAZARDOUS MATERIALS SHALL BE UNDERTAKEN BY A HAZARDOUS MATERIAL CONSULTANT AND CERTIFIED PROFESSIONALS. IF SUCH MATERIALS HAVE BEEN IDENTIFIED, CONTRACTOR WILL COMMUNICATE DIRECTLY WITH HAZARDOUS MATERIAL PROFESSIONAL FOR THE PERFORMANCE OF ANY WORK ON OR ADJACENT TO SAID MATERIALS. IF UNIDENTIFIED MATERIALS OF CONCERN ARE ENCOUNTERED WHILE UNDERTAKING THE WORK SHOWN HEREON, CONTRACTOR SHALL IMMEDIATELY NOTIFY ENGINEER AND OWNER, AND SHALL OBTAIN DIRECTION FROM THE HAZARDOUS MATERIAL CONSULTANT PRIOR TO THE CONTINUATION OF WORK INVOLVING SUSPECTED MATERIAL.

UDIG·NY SAFE DIGGING STARTS HERE
CALL 811

UNAUTHORIZED ADDITION OR ALTERATION OF THIS PLAN IS A VIOLATION OF SECTION 7209(2) OF THE NEW YORK STATE EDUCATION LAW.

ALL PRODUCTION & INTELLECTUAL PROPERTY RIGHT RESERVED ©

CAESARS LANE WWTP EXPANSION PROJECT: PHASE 1
145 CAESARS LN.
NEW WINDSOR, NY 12553
FOR TOWN OF NEW WINDSOR
555 UNION AVE.
NEW WINDSOR, NY 12553

DEWATERING BUILDING - UPPER LEVEL FLOOR PLAN & DETAILS

REVISIONS

NO.	DESCRIPTION	DATE

ISSUED DATE:	21 NOV, 2024
DESIGN BY:	AW
DRAWN BY:	EDIII
CHECKED BY:	AW
REVIEWED BY:	JZ, ML

SHEET NO.
A-702

PROJECT # 18-732 PHASE # 1

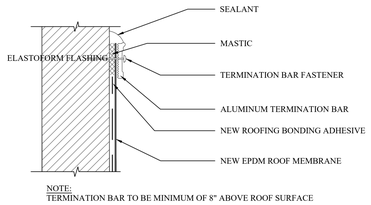

NOTE:
TERMINATION BAR TO BE MINIMUM OF 8" ABOVE ROOF SURFACE

2 A-703 TERMINATION BAR DETAIL (TYP.)
SCALE: 3" = 1'-0"

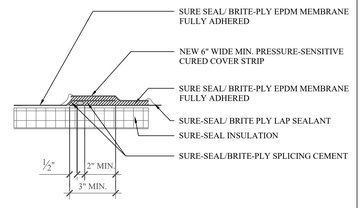

3 A-703 LAP SEALANT - EPDM (TYP.)
SCALE: 3" = 1'-0"

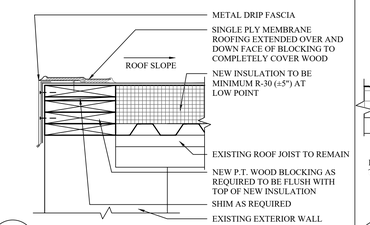

4 A-703 NEW ROOF EDGE DETAIL
SCALE: 1-1/2" = 1'-0"

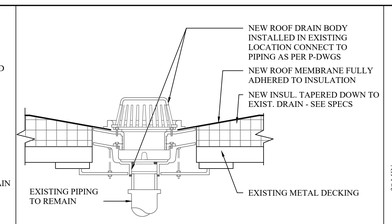

NOTE:
INSULATE ENTIRE UNDERSIDE OF ROOF DRAIN BODY.

5 A-703 ROOF DRAIN DETAIL
SCALE: 3" = 1'-0"

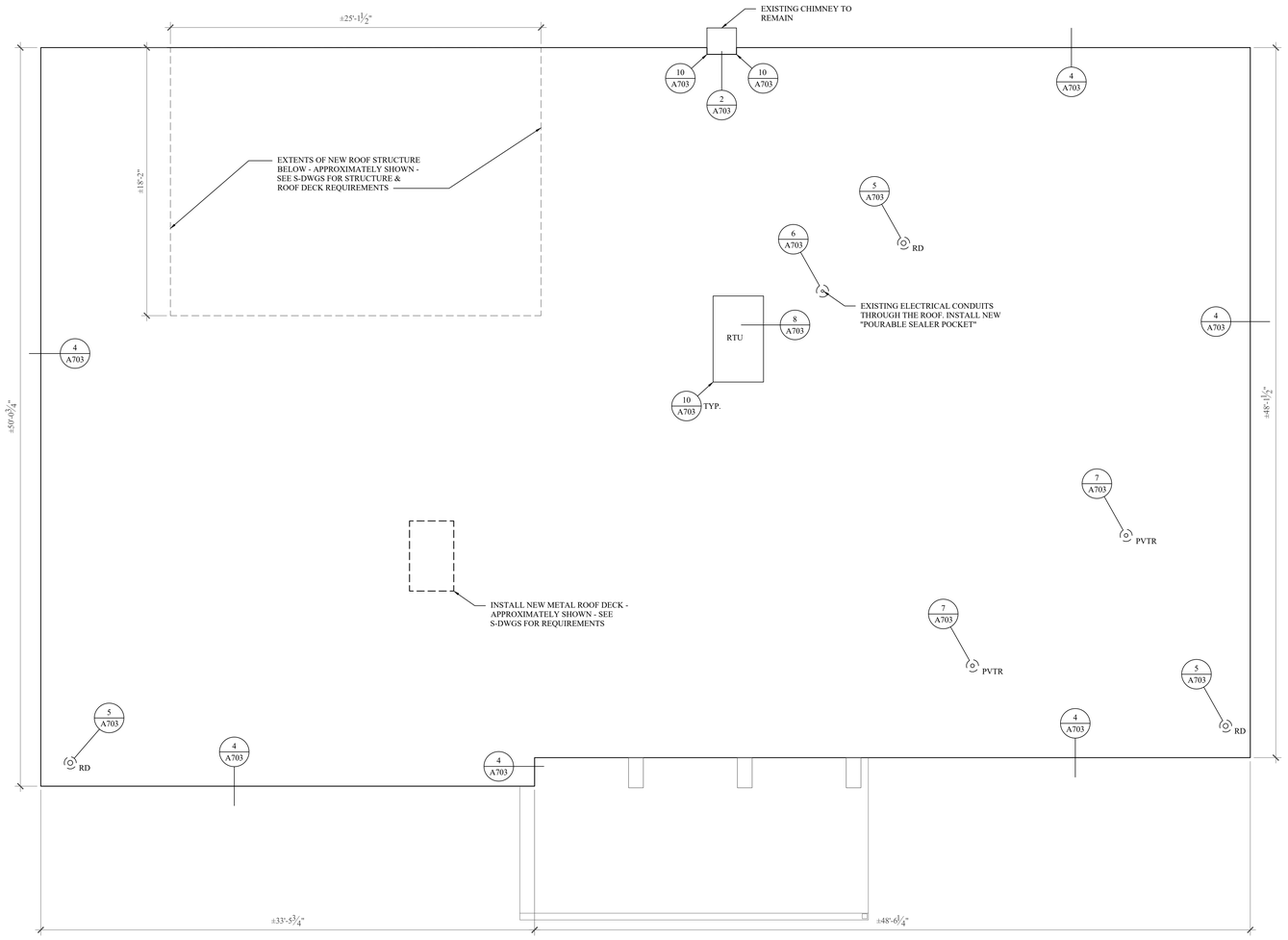

GENERAL - ROOF PLAN NOTES

- ALL EXISTING PLUMBING PIPE PENETRATION LOCATIONS THROUGH ROOF TO REMAIN U.O.N. - SEE P-DWGS
- EXISTING PVTR PIPE LOCATION TO REMAIN U.O.N. - SEE P-DWGS
- EXISTING ROOF DRAIN BODY TO BE REMOVED AND REPLACED IN SAME LOCATION U.O.N. - SEE DETAILS ON A-703 & SEE P-DWGS

RD - ROOF DRAIN
PVTR - PLUMBING VENT THROUGH ROOF
RV - ROOF VENT
RS - ROOF SCUPPER
RCEF - ROOF CURB WITH EXHAUST FANS
GN - GOOSE NECK EXHAUST

1 A-703 PROPOSED ROOF PLAN
SCALE: 1/4" = 1'-0"

PROJECT NORTH TRUE NORTH

SIDES CANNOT EXCEED 12 INCHES

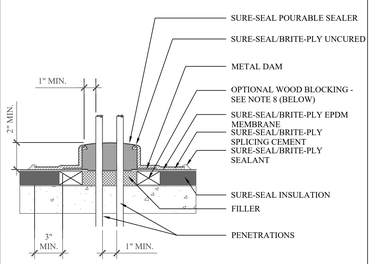

NOTES:
1. 180°F (82°C) MAXIMUM TEMPERATURE.
2. POURABLE SEALER MUST CONTACT UNCURED ELASTOFORM FLASHING AND DECK MEMBRANE.
3. DECK FLANGE MUST BE CONTINUOUS WITH ROUNDED CORNERS.
4. POURABLE SEALER POCKET MAY BE ROUND.
5. POURABLE SEALER POCKET TO BE 1 IN. MIN. FROM PENETRATION ON ANY SIDE.
6. POURABLE SEALER MUST COMPLETELY FILL POURABLE SEALER POCKET TO PREVENT PONDING OF WATER.
7. POURABLE SEALER TO BE MIN. 2 IN. DEEP.
8. IF ANY SIDE EXCEEDS 12 IN., USE TREATED WOOD NAILERS; SEE NOTE ABOVE.
9. POURABLE SEALER MUST CONTACT THE BARE SURFACE OF THE PENETRATION. ALL DEBRIS (PAINT, RUST LEAD, OTHER FLASHING, ETC.) MUST BE REMOVED FROM THE PENETRATION.

6 A-703 FIELD FABRICATED POURABLE SEALER POCKET (TYP.)
SCALE: N.T.S.

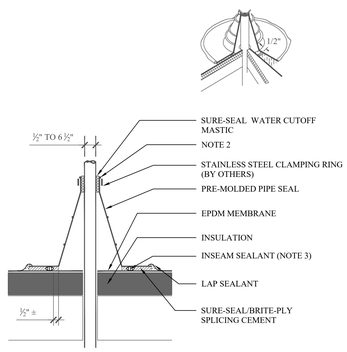

NOTES:
1. REMOVE ALL LEAD AND OTHER FLASHING.
2. PRE-MOLDED PIPE SEAL MUST HAVE INTACT RIB AT TOP EDGE, REGARDLESS OF PIPE DIAMETER
3. APPLY INSEAM SEALANT ½" FROM INSIDE EDGE OF PIPE SEAL FLANGE
4. DECK FLANGES OF THE PRE-MOLDED PIPE FLASHING SHALL NOT BE OVERLAPPED, CUT OR APPLIED OVER ANY ANGLE CHANGE.

7 A-703 PLUMBING VENT THRU ROOF DETAIL (TYP.)
SCALE: N.T.S.

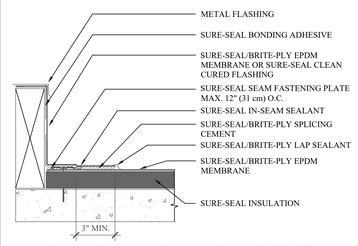

* FOR PROPER IN-SEAM AND LAP SEAM SEALANT PLACEMENT SEE DETAIL 1/A101

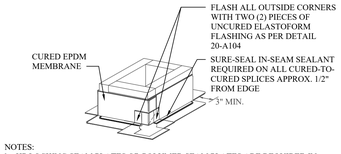

NOTES:
1. HP LOCKING SEAM PLATES OR POLYMER SEAM PLATES ARE REQUIRED IN LIEU OF SEAM FASTENING PLATES FOR MECHANICALLY-FASTENED ROOFING SYSTEMS OVER STEEL DECKS.
2. IF VERTICAL SPLICE NOT LOCATED AT CORNER, 6 IN. WIDE UNCURED ELASTOFORM FLASHING OR PRESSURE SENSITIVE FLASHING MUST BE CENTERED OVER FIELD SPLICE AT ANGLE CHANGE.

8 A-703 CURB FLASHING - EPDM (TYP.)
SCALE: N.T.S.

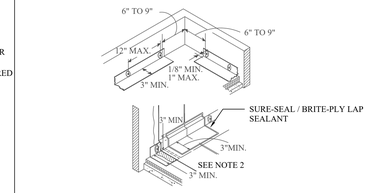

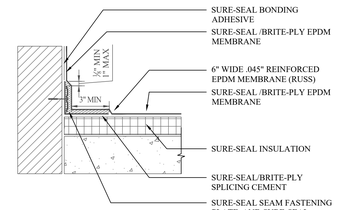

NOTES:
1. FOR CORNER APPLICATION, SEE DETAILS BY ROOF MFG
2. 6" WIDE UNCURED ELASTOFORM FLASHING OR PRESSURE SENSITIVE FLASHING MUST BE CENTERED OVER FIELD SPLICE AT ANGLE CHANGE.

9 A-703 PARAPET/CURB WITH RUSS (VERT) - EPDM (TYP.)
SCALE: N.T.S.

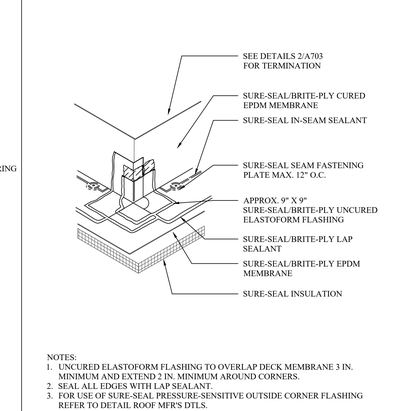

NOTES:
1. UNCURED ELASTOFORM FLASHING TO OVERLAP DECK MEMBRANE 3 IN. MINIMUM AND EXTEND 2 IN. MINIMUM AROUND CORNERS.
2. SEAL ALL EDGES WITH LAP SEALANT.
3. FOR USE OF SURE-SEAL PRESSURE-SENSITIVE OUTSIDE CORNER FLASHING REFER TO DETAIL ROOF MFR'S DTLS.
4. A HEAT GUN MUST BE USED WHEN FORMING BRITE-PLY FLASHING.
5. SEMI-CURED PRESSURE SENSITIVE FLASHING ROLLS CANNOT BE USED AT CORNERS. ELASTOFORM FLASHING OR SURE-SEAL INSIDE/OUTSIDE CORNERS MUST BE USED.

10 A-703 EPDM FLASHING DETAIL (TYP.)
SCALE: N.T.S.

MHE ENGINEERING
33 Airport Center Drive, Suite 202
New Windsor, NY 12553
(845) 567-3100
111 Wheatfield Drive, Suite 1
Milford, PA 18337
(570) 296-2765

BID SET

HAZARDOUS MATERIAL NOTE:
THE SERVICES PROVIDED BY MHE, INCLUDING ALL WORK DEPICTED ON MHE PLANS, DO NOT INCLUDE SERVICES RELATED TO THE IDENTIFICATION, CONTROLS OR HANDLING OF HAZARDOUS MATERIALS, INCLUDING SUCH MATERIALS AS ASBESTOS AND LEAD PAINT. ALL TESTING, IDENTIFICATION, ABATEMENT, CONTROLS, AND HANDLING OF HAZARDOUS MATERIALS SHALL BE UNDERTAKEN BY A HAZARDOUS MATERIAL CONSULTANT AND CERTIFIED PROFESSIONALS. IF SUCH MATERIALS HAVE BEEN IDENTIFIED, CONTRACTOR WILL COMMUNICATE DIRECTLY WITH HAZARDOUS MATERIAL PROFESSIONAL FOR THE PERFORMANCE OF ANY WORK ON OR ADJACENT TO SAID MATERIALS. IF UNIDENTIFIED MATERIALS OF CONCERN ARE ENCOUNTERED WHILE UNDERTAKING THE WORK SHOWN HEREON, CONTRACTOR SHALL IMMEDIATELY NOTIFY ENGINEER AND OWNER, AND SHALL OBTAIN DIRECTION FROM THE HAZARDOUS MATERIAL CONSULTANT PRIOR TO THE CONTINUATION OF WORK INVOLVING SUSPECTED MATERIAL.

UDIG·NY SAFE DIGGING STARTS HERE
CALL 811

UNAUTHORIZED ADDITION OR ALTERATION OF THIS PLAN IS A VIOLATION OF SECTION 7209(2) OF THE NEW YORK STATE EDUCATION LAW.

ALL PRODUCTION & INTELLECTUAL PROPERTY RIGHT RESERVED ©

CAESARS LANE WWTP EXPANSION PROJECT: PHASE 1
145 CAESARS LN.
NEW WINDSOR, NY 12553
FOR TOWN OF NEW WINDSOR
555 UNION AVE.
NEW WINDSOR, NY 12553

DEWATERING BUILDING - ROOF PLAN, DETAILS & NOTES

REVISIONS

NO.	DESCRIPTION	DATE

ISSUED DATE:	21 NOV, 2024
DESIGN BY:	AW
DRAWN BY:	EDIII
CHECKED BY:	AW
REVIEWED BY:	JZ, ML

SHEET NO.
A-703

PROJECT # 18-732 PHASE # 1

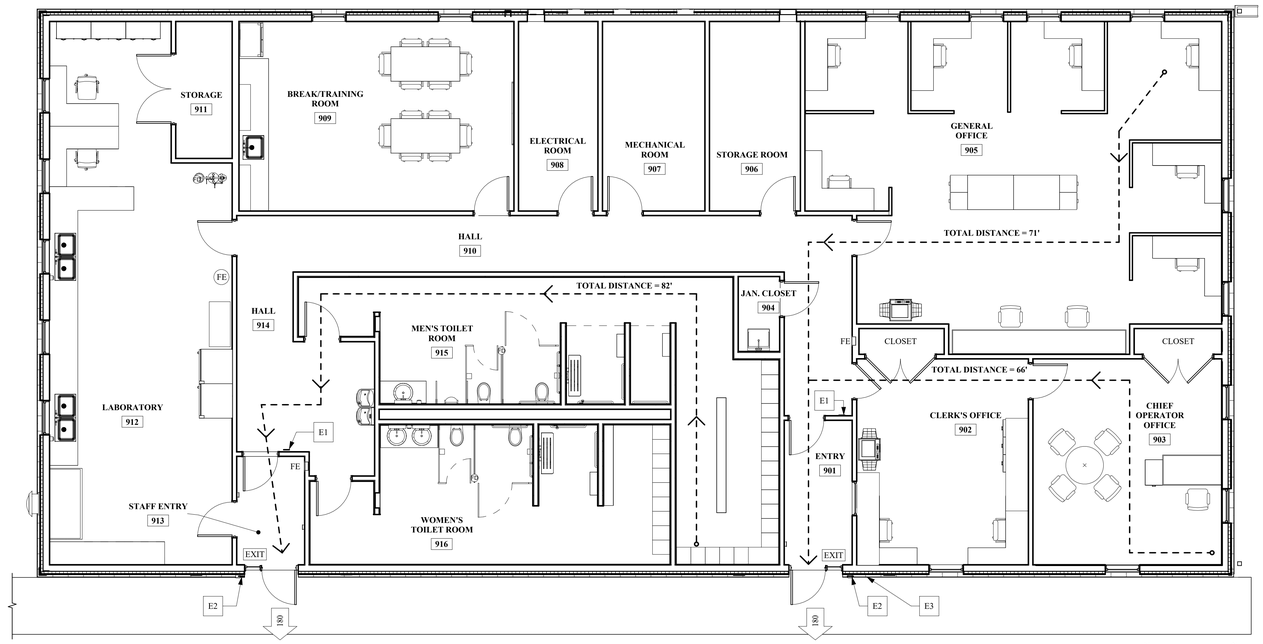

EGRESS PLAN
SCALE: 3/16" = 1'-0"

APPLICABLE CODES					
	2020 BUILDING CODE OF NEW YORK STATE				
GENERAL DESCRIPTION OF BUILDING					
	THE PROPOSED PROJECT IS A NEW 1 STORY BUILDING				
GENERAL DESCRIPTION OF THE PROJECT					
	THE PROJECT IS DESIGNED AS OFFICES FOR THE SEWAGE TREATMENT PLANT WITH LAB SPACE TO TEST WATER, ETC. AND TOILET ROOMS LOCKER ROOMS FOR STAFF				
CODE SUMMARY					
	ITEM	CODE SECTION	REQUIRED / ALLOWED	PROVIDED	REMARKS
	OCCUPANCY				
	B (BUSINESS) OFFICES WITH INCIDENTAL STORAGE / MECH. SPACE	304.1			
	INCIDENTAL STORAGE / MECHANICAL SPACE	TABLE 302.1.1			
	SEPARATED USES	302.3.2	N/A		SINGLE OCCUPANCY
	GENERAL DESCRIPTION OF BUILDING				
	1 STORY				
	FLOOR AREA			4,978 SF	
	CONSTRUCTION			COLD FORMED METAL FRAMED BEARING WALLS WITH POURED CONCRETE FOUNDATION WALLS, A POURED CONCRETE FLOOR SLAB ON GRADE, WITH ROOF FRAMING TO BE COLD FORMED METAL TRUSSES WITH STANDING SEAM METAL ROOF	
	OCCUPANCY SEPARATION				
	SINGLE OCCUPANCY	N/A		NONE	
	GENERAL BUILDING HEIGHT AND FIRE AREAS – BASED ON TYPE 5b CONSTRUCTION				
	B OCCUPANCY HEIGHT (STORIES)	TABLE 504.4	1 STORY	1 STORY	
	B OCCUPANCY HEIGHT (FEET)	TABLE 504.3	40 FEET	29 FEET	
	B OCCUPANCY AREA	TABLE 506.2	ALLOWED = 6000 SF (NON-SPR)	4,978 SF	
	TYPES OF CONSTRUCTION				
	TYPE 5b	TABLE 601			
	STRUCTURAL FRAME	TABLE 601	0	0	COLD FORMED METAL
	BEARING EXTERIOR WALLS	TABLE 601	0	0	
	BEARING WALLS - INTERIOR	TABLE 601	0	N/A	NONE
	NONBEARING WALLS AND PARTITIONS-EXTERIOR	TABLE 601	SEE BELOW		
	NONBEARING WALLS AND PARTITIONS-INTERIOR	TABLE 601	0	0	
	FLOOR CONSTRUCTION INCLUDING SUPPORTING BEAMS AND JOISTS	TABLE 601	0	0	POURED CONCRETE SLAB ON GRADE
	ROOF CONSTRUCTION	TABLE 601	0	0	COLD FORMED ROOF TRUSSES
	FIRE-RESISTANCE RATING REQUIREMENTS FOR EXTERIOR WALLS BASED ON FIRE SEPARATION DISTANCE				
	FIRE SEPARATION DISTANCE	TABLE 602	GREATER THAN 30 FEET		NO RATING REQUIRED
	FIRE-RESISTANCE RATED CONSTRUCTION				
	EXTERIOR WALLS	705	N/A		
	FIRE WALLS	706	N/A		
	FIRE BARRIERS	707	N/A		
	SHAFT ENCLOSURES	713	N/A		
	FIRE PARTITIONS	708	N/A		
	DRAFT STOPPING IN ATTICS	708.4.2	N/A		
	INTERIOR FINISHES				
	B OCCUPANCY				
	VERTICAL EXITS AND PASSAGEWAYS	TABLE 803.13	B	N/A	
	EXIT ACCESS CORRIDORS AND OTHER EXITWAYS	TABLE 803.13	B	A	PAINTED GYPSUM BOARD & OR/ SUSPENDED CLGS.
	ROOM AND ENCLOSED SPACES	TABLE 803.13	C	A	PAINTED GYPSUM BOARD / SUSPENDED CEILINGS
	FIRE PROTECTION SYSTEMS				
	AUTOMATIC SPRINKLER SYSTEMS	903	NOT REQUIRED	NOT PROVIDED	FIRE AREA IS LESS THAN 12,000 SF OCCUPANT LOAD IS 34 THE FIRE AREA IS THE LEVEL OF DISCHARGE
	STANDPIPE SYSTEMS	905	N/A		
	FIRE ALARM SYSTEM	907.2.1	NOT REQUIRED	PROVIDED	OCCUPANCY LOAD IS LESS THAN 500
	MEANS OF EGRESS				
	OCCUPANT LOAD: B - BUSINESS OCCUPANCY	TABLE 1004.5	B - 150 SF / OCCUPANT	B - 4,978 / 150 = 34 PEOPLE ***TOTAL = 34 PEOPLE***	
	EGRESS WIDTH - STAIRS	1005.3.1	0.3 " PER OCCUPANT	N/A	
	EGRESS WIDTH - OTHER	1005.3.2	0.2" PER OCCUPANT	DOORS 36" WIDE / 2 = 180 CAPACITY AT EACH OF 2 EXIT DOORS	
	MEANS OF EGRESS ILLUMINATION	1008	REQUIRED	PROVIDED	BUILDING EQUIPPED WITH STANDBY GENERATOR
	ACCESSIBLE MEANS OF EGRESS	1009 / TABLE 1006.2.1	2 REQUIRED	2 PROVIDED	
	AREA OF REFUGE	1009.6	NONE REQUIRED	N/A	
	EXIT ACCESS	1016	N/A		
	EXIT TRAVEL DISTANCE	TABLE 1017.2	200 FEET	LESS THAN 200 FEET	
	ACCESSIBILITY				
	GENERAL REQUIREMENTS	1101	REQUIRED	PROVIDED	
	ONE STORY BUILDINGS	1104	SPACES ABOVE OR BELOW GRADE OVER 3,000 SF REQUIRED TO BE ACCESSIBLE	N/A	THE ENTIRE BUILDING WILL BE ACCESSIBLE AT GRADE ENTRY
	PLUMBING FACILITIES				
	B OCCUPANCY				
	WATER CLOSETS	TABLE 2902.1	1 PER 25 FOR THE FIRST 50 1 PER 50 FOR THE REMAINDER (1 MALE / 1 FEMALE)	COMPLIES 1 MALE 1 FEMALE	
	LAVATORIES	TABLE 2902.1	1 PER 40 FOR THE FIRST 80 1 PER 80 FOR THE REMAINDER (1 MALE / 1 FEMALE)	COMPLIES 1 MALE 1 FEMALE	
	BATHTUBS OR SHOWERS	TABLE 2902.1	NONE REQUIRED	3 PROVIDED	
	DRINKING FOUNTAIN	TABLE 2902.1	1 PER 100	PROVIDED	

SYMBOLS LEGEND

#	SIGNIFIES CAPACITY OF EXIT IN # OF PERSONS
EXIT	EXIT LIGHT LOCATION
FE	WALL MOUNTED FIRE EXTINGUISHER ON BRACKET - COORDINATE LOCATIONS WITH AUTHORITY HAVING JURISDICTION
FE	FIRE EXTINGUISHER IN RECESSED WALL CABINET
	INDICATES PATH OF EGRESS WITH TRAVEL DISTANCE
E1	WALL MOUNTED EXIT SIGN - SEE DETAIL 2/G901
E2	TRUSS PLACARD DETAIL - SEE SETAIL 4/G901
E3	FIRE DEPARTMENT KNOXBOX COORDINATE REQUIREMENTS W/ AUTHORITY HAVING JURISDICTION

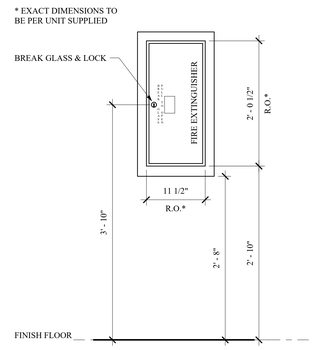

2 G-901 FIRE EXTINGUISHER CABINET DETAIL
SCALE: 1" = 1'-0"

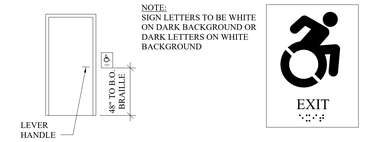

1 G-901 ACCESSIBLE EXIT SIGNAGE DETAIL
SCALE: 3" = 1'-0"

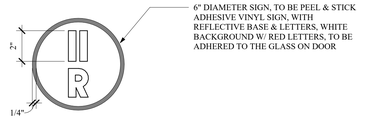

3 G-901 TRUSS PLACARD DETAIL
SCALE: 3" = 1'-0"

MHE ENGINEERING
33 Airport Center Drive, Suite 202
New Windsor, NY 12553
(845) 567-3100
111 Wheatfield Drive, Suite 1
Milford, PA 18337
(570) 296-2765

BID SET

UDIG·NY SAFE DIGGING STARTS HERE CALL 811

UNAUTHORIZED ADDITION OR ALTERATION OF THIS PLAN IS A VIOLATION OF SECTION 7209(2) OF THE NEW YORK STATE EDUCATION LAW.

ALL PRODUCTION & INTELLECTUAL PROPERTY RIGHTS RESERVED ©

CAESARS LANE WWTP EXPANSION PROJECT: PHASE 1
145 CAESARS LN.
NEW WINDSOR, NY 12553
FOR TOWN OF NEW WINDSOR
555 UNION AVE.
NEW WINDSOR, NY 12553

CONTROL BUILDING - EGRESS PLAN, CODE ANALYSIS & DETAILS

REVISIONS

NO.	DESCRIPTION	DATE

ISSUED DATE:	21 NOV, 2024
DESIGNED BY:	AW
DRAWN BY:	CH, EDIII
CHECKED BY:	AW
REVIEWED BY:	ML

SHEET NO.
G-901

PROJECT # 18-732 PHASE #

C:\Users\ryder\Documents\18-732 Caesar's Lane - Control Building_ryderAYRWS_ryderAYRWS.rvt 11/21/2024 12:04:40 PM

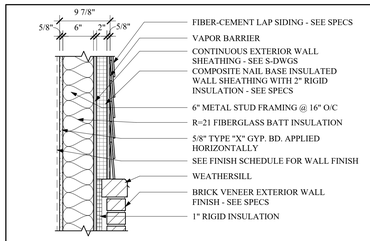

A EXTERIOR WALL TYPE
SCALE: 1" = 1'-0"

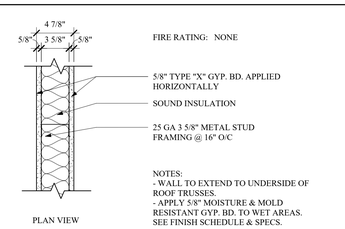

B INTERIOR WALL TYPE
SCALE: 1 1/2" = 1'-0"

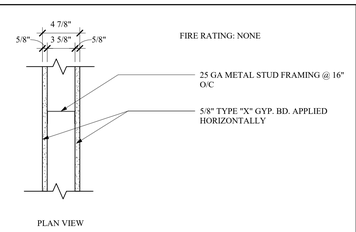

C INTERIOR WALL TYPE
SCALE: 1 1/2" = 1'-0"

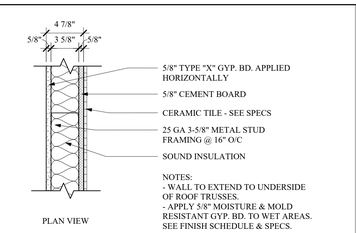

D INTERIOR WALL TYPE
SCALE: 1 1/2" = 1'-0"

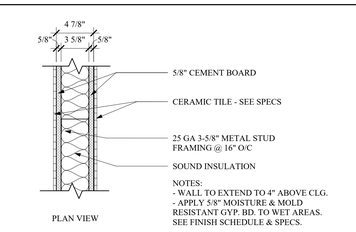

E INTERIOR WALL TYPE
SCALE: 1 1/2" = 1'-0"

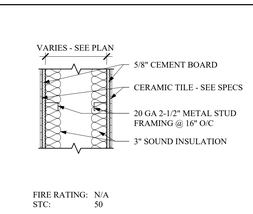

F INTERIOR WALL TYPE
SCALE: 1" = 1'-0"

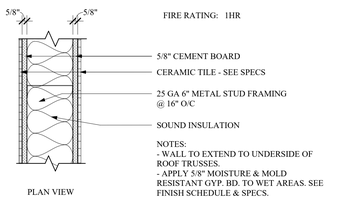

G INTERIOR WALL TYPE
SCALE: 1 1/2" = 1'-0"

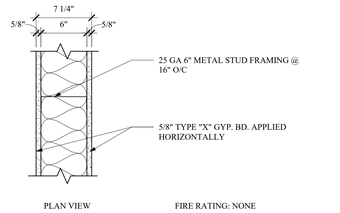

H INTERIOR WALL TYPE
SCALE: 1 1/2" = 1'-0"

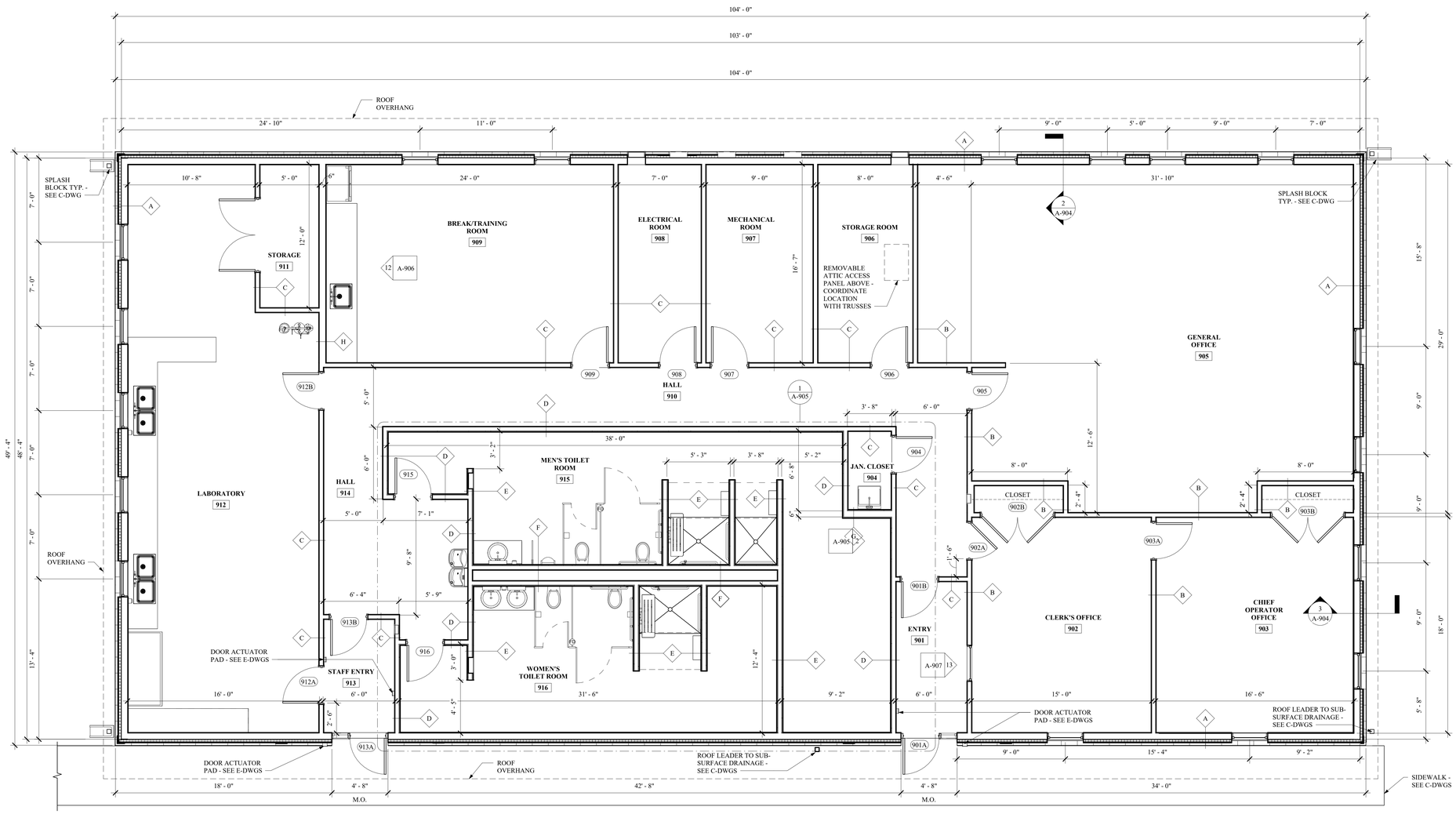

FLOOR PLAN
SCALE: 1/4" = 1'-0"

0' 5' 10' 20'

PROJECT NORTH

TRUE NORTH

ENGINEERING
33 Airport Center Drive, Suite 202
New Windsor, NY 12553
(845) 567-3100
111 Wheatfield Drive, Suite 1
Milford, PA 18337
(570) 296-2765

BID SET

UDIG·NY SAFE DIGGING STARTS HERE CALL 811

UNAUTHORIZED ADDITION OR ALTERATION OF THIS PLAN IS A VIOLATION OF SECTION 7209(2) OF THE NEW YORK STATE EDUCATION LAW.

ALL PRODUCTION & INTELLECTUAL PROPERTY RIGHTS RESERVED ©

CAESARS LANE WWTP EXPANSION PROJECT: PHASE 1
145 CAESARS LN.
NEW WINDSOR, NY 12553
FOR TOWN OF NEW WINDSOR
555 UNION AVE.
NEW WINDSOR, NY 12553

CONTROL BUILDING - FLOOR PLAN & WALL TYPES

REVISIONS

NO.	DESCRIPTION	DATE

ISSUED DATE:	21 NOV, 2024
DESIGNED BY:	AW
DRAWN BY:	TS, EDIII, CH
CHECKED BY:	AW
REVIEWED BY:	ML

SHEET NO.

A-901

PROJECT # 18-732 PHASE #

C:\Users\jtyler\Documents\18-732 Ceasar's Lane - Control Building_typlerTSVWS_typlerTSVWS.rvt 11/21/2024 12:04:41 PM

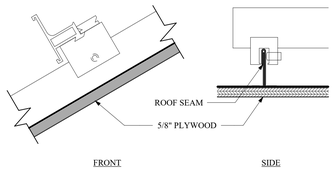

1 A-902 SNOW GUARD FASTENING DTL, TYP.
SCALE: 3" = 1'-0"

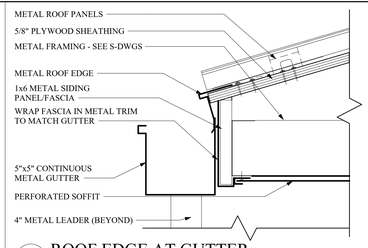

2 A-902 ROOF EDGE AT GUTTER
SCALE: 3" = 1'-0"

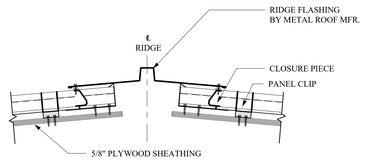

3 A-902 FIXED ROOF RIDGE DETAIL
SCALE: 1 1/2" = 1'-0"

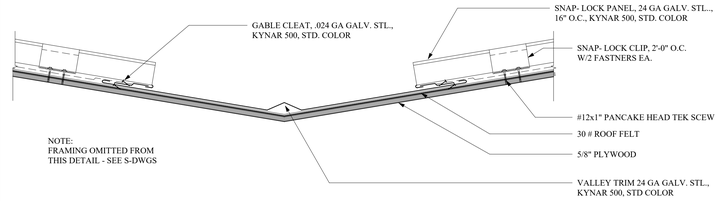

4 A-902 VALLEY FLASHING DETAIL
SCALE: 1 1/2" = 1'-0"

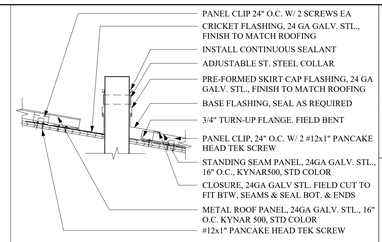

5 A-902 ROOF PENETRATION DETAIL
SCALE: 1 1/2" = 1'-0"

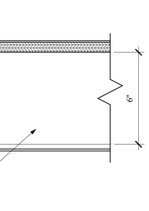

6 A-902 ROOF RAKE DETAIL
SCALE: 3" = 1'-0"

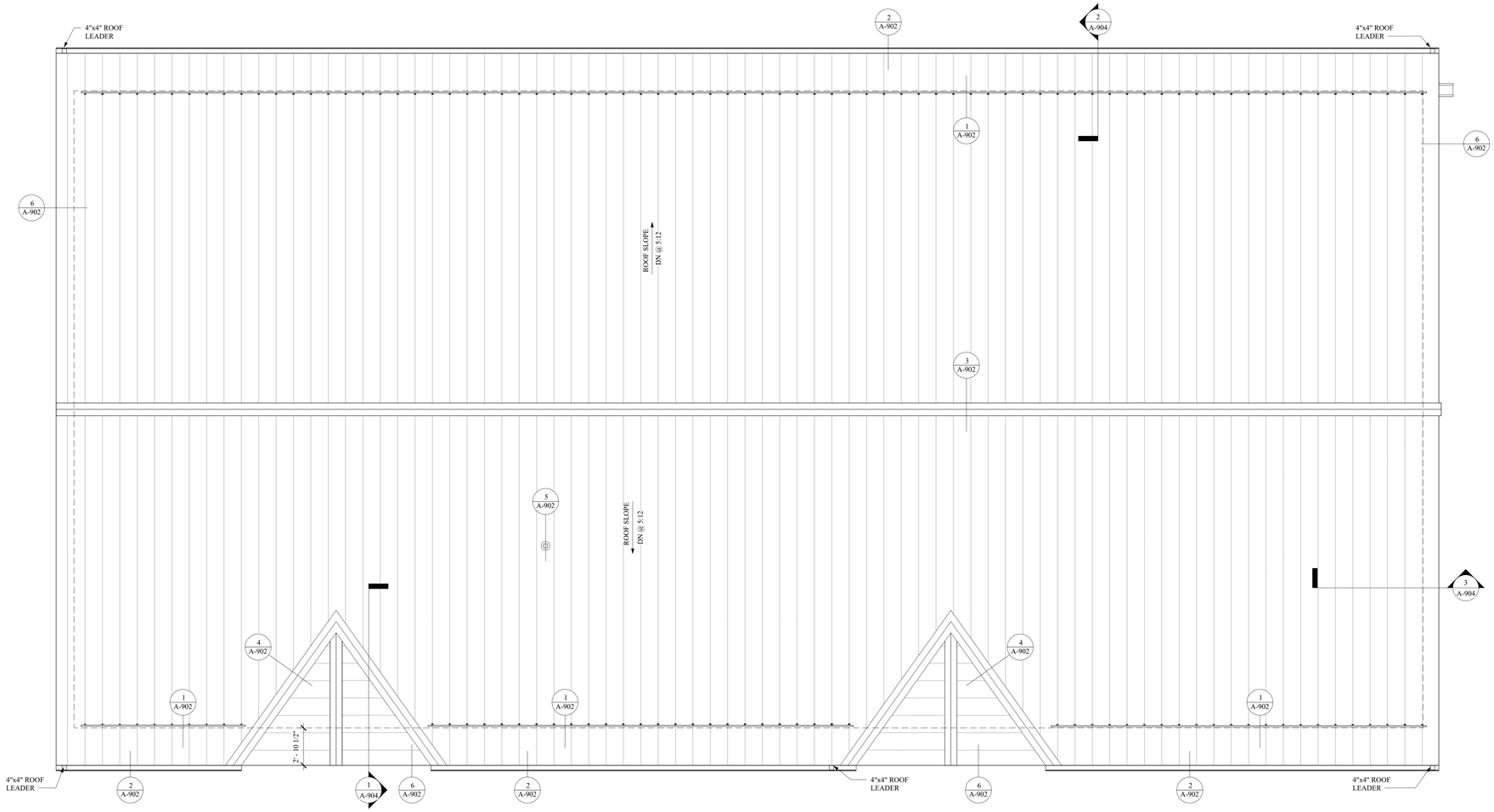

ROOF PLAN
SCALE: 1/4" = 1'-0"

PROJECT NORTH

TRUE NORTH

MHE ENGINEERING
33 Airport Center Drive, Suite 202
New Windsor, NY 12553
(845) 567-3100
111 Wheatfield Drive, Suite 1
Milford, PA 18337
(570) 296-2765

BID SET

UDIG·NY SAFE DIGGING STARTS HERE CALL 811

UNAUTHORIZED ADDITION OR ALTERATION OF THIS PLAN IS A VIOLATION OF SECTION 7209(2) OF THE NEW YORK STATE EDUCATION LAW.

ALL PRODUCTION & INTELLECTUAL PROPERTY RIGHTS RESERVED ©

CAESARS LANE WWTP EXPANSION PROJECT: PHASE 1
145 CAESARS LN.
NEW WINDSOR, NY 12553
FOR TOWN OF NEW WINDSOR
555 UNION AVE.
NEW WINDSOR, NY 12553

CONTROL BUILDING - ROOF PLAN & DETAILS

REVISIONS

NO.	DESCRIPTION	DATE

ISSUED DATE:	21 NOV, 2024
DESIGNED BY:	AW
DRAWN BY:	CH, EDIII
CHECKED BY:	AW
REVIEWED BY:	ML

SHEET NO.
A-902

PROJECT # 18-732 PHASE #

C:\Users\dylan\Documents\18-732 Ceasar's Lane - Control Building_dylanAWWS_dylanNWWS.rvt 11/21/2024 12:04:42 PM

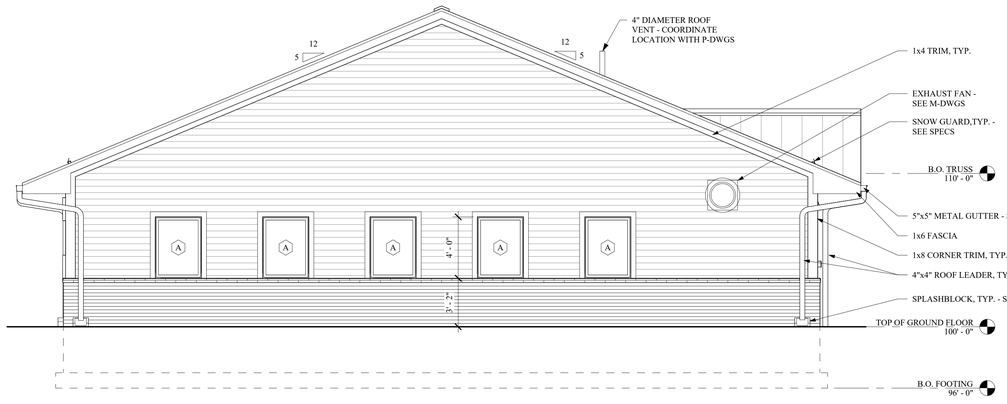

1 A-903 WEST ELEVATION
SCALE: 1/4" = 1'-0"

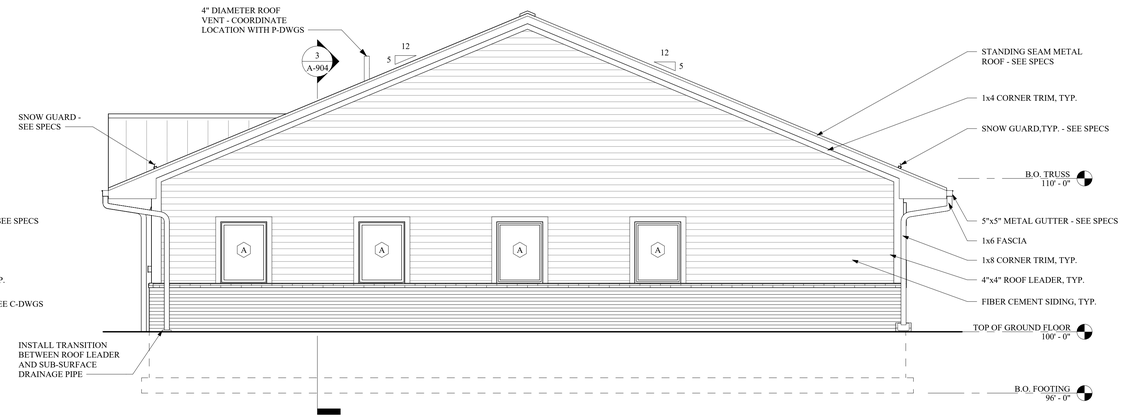

2 A-903 EAST ELEVATION
SCALE: 1/4" = 1'-0"

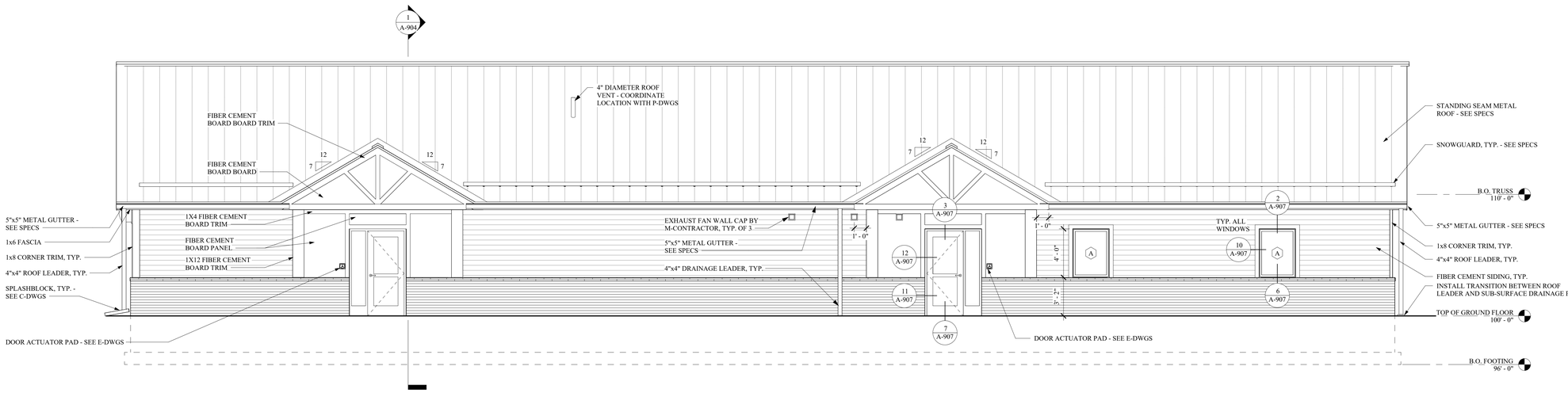

3 A-903 SOUTH ELEVATION
SCALE: 1/4" = 1'-0"

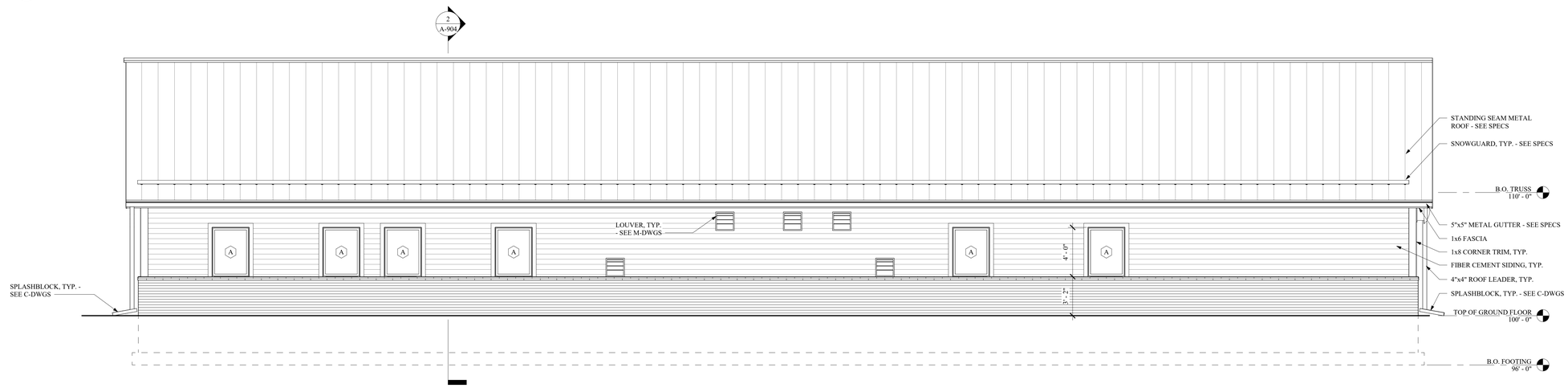

4 A-903 NORTH ELEVATION
SCALE: 1/4" = 1'-0"

MHE ENGINEERING
33 Airport Center Drive, Suite 202
New Windsor, NY 12553
(845) 567-3100
111 Wheatfield Drive, Suite 1
Milford, PA 18337
(570) 296-2765

BID SET

UDIG·NY SAFE DIGGING STARTS HERE CALL 811

UNAUTHORIZED ADDITION OR ALTERATION OF THIS PLAN IS A VIOLATION OF SECTION 7209(2) OF THE NEW YORK STATE EDUCATION LAW.

ALL PRODUCTION & INTELLECTUAL PROPERTY RIGHTS RESERVED ©

CAESARS LANE WWTP EXPANSION PROJECT: PHASE 1
145 CAESARS LN.
NEW WINDSOR, NY 12553
FOR TOWN OF NEW WINDSOR
555 UNION AVE.
NEW WINDSOR, NY 12553

CONTROL BUILDING - EXTERIOR ELEVATIONS

REVISIONS

NO.	DESCRIPTION	DATE

ISSUED DATE:	21 NOV, 2024
DESIGNED BY:	AW
DRAWN BY:	TS, EDIII, CH
CHECKED BY:	AW
REVIEWED BY:	ML

SHEET NO.

A-903

PROJECT # 18-732 PHASE #

C:\Users\cbyler\Documents\18-732 Caesar's Lane - Control Building_cbylerVBWS_cbylerVBWS.rvt 11/21/2024 12:04:44 PM

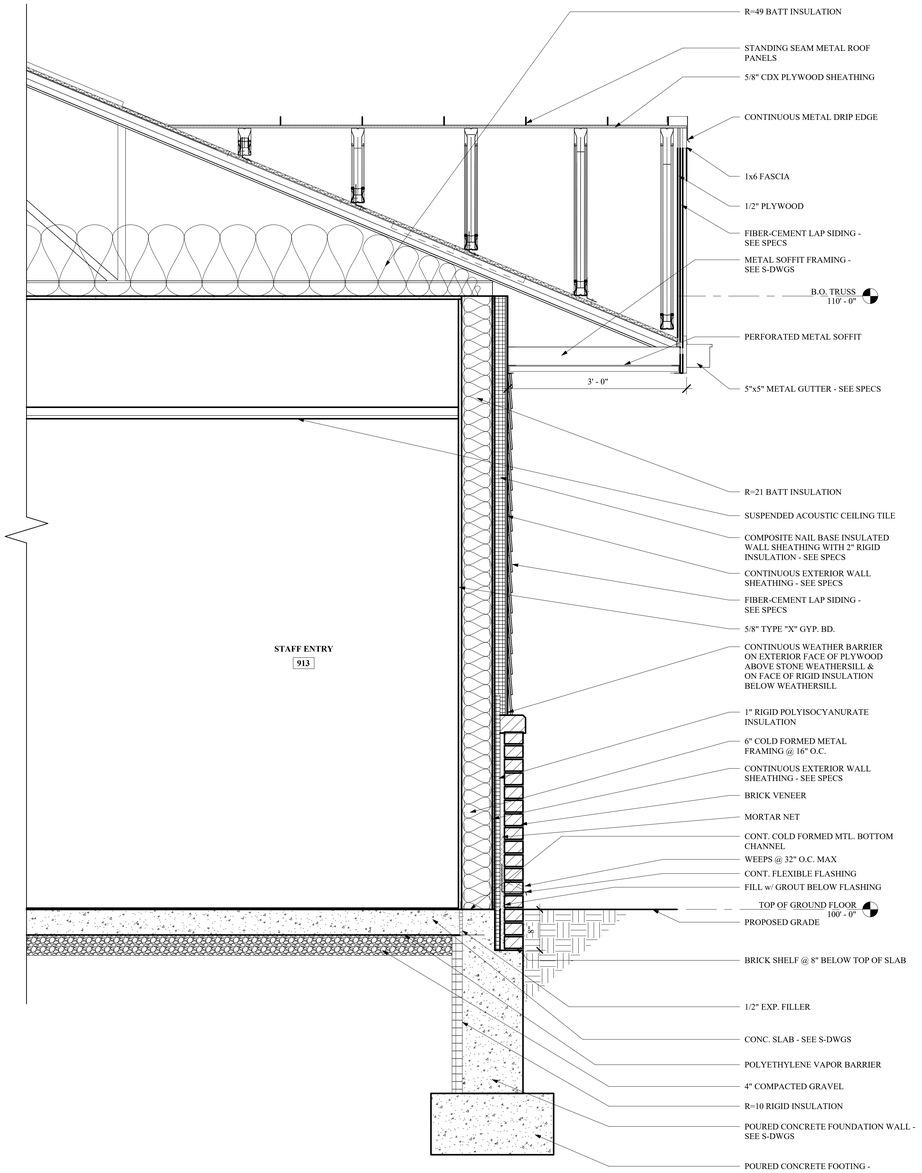

1 A-904 TYPICAL DORMER SECTION
SCALE: 1" = 1'-0"

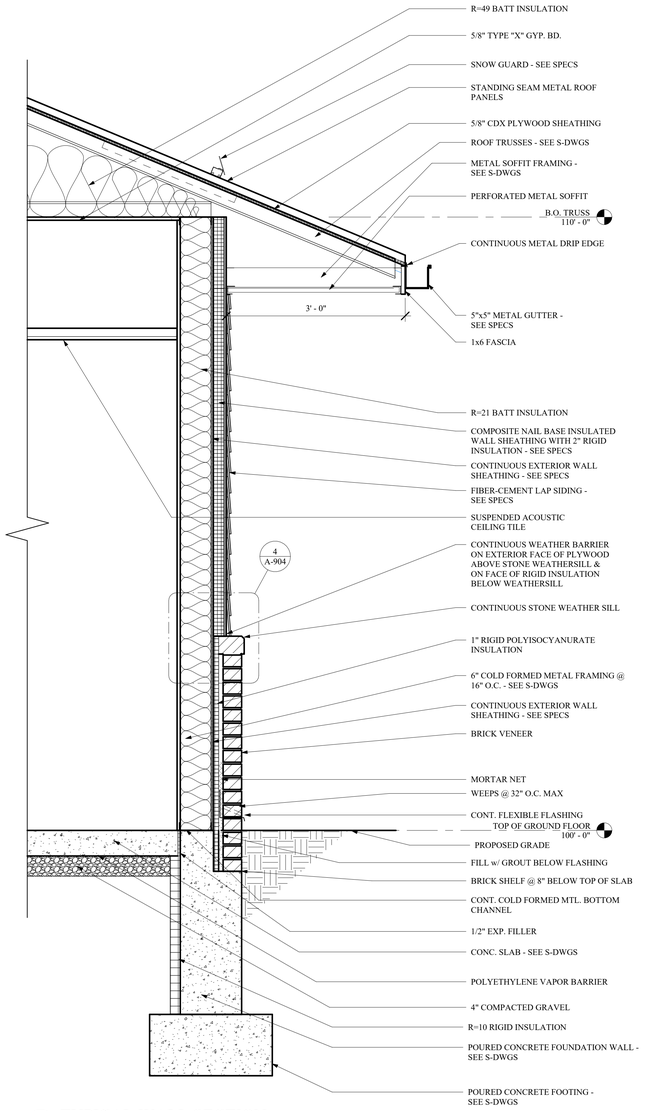

2 A-904 TYPICAL WALL SECTION
SCALE: 1" = 1'-0"

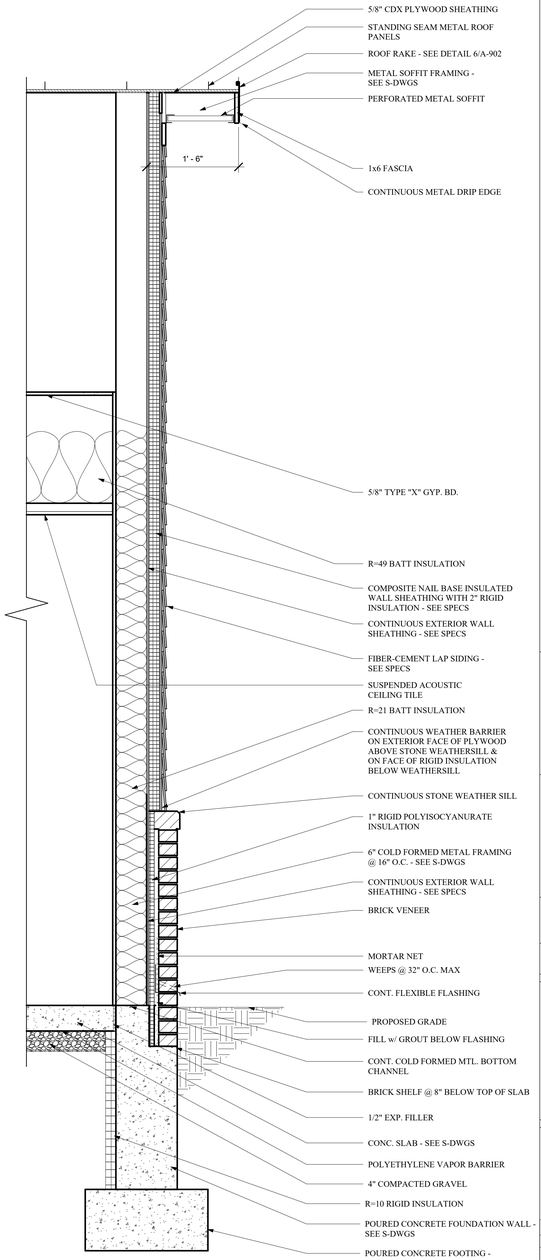

3 A-904 TYPICAL GABLE SECTION
SCALE: 1" = 1'-0"

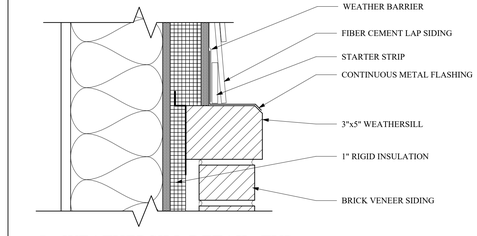

4 A-904 WEATHERSILL DETAIL, TYP.
SCALE: 3" = 1'-0"

MHE ENGINEERING
33 Airport Center Drive, Suite 202
New Windsor, NY 12553
(845) 567-3100
111 Wheatfield Drive, Suite 1
Milford, PA 18337
(570) 296-2765

BID SET

UDIG·NY SAFE DIGGING STARTS HERE CALL 811

UNAUTHORIZED ADDITION OR ALTERATION OF THIS PLAN IS A VIOLATION OF SECTION 7209(2) OF THE NEW YORK STATE EDUCATION LAW.

ALL PRODUCTION & INTELLECTUAL PROPERTY RIGHTS RESERVED ©

CAESARS LANE WWTP EXPANSION PROJECT: PHASE 1
145 CAESARS LN.
NEW WINDSOR, NY 12553
FOR TOWN OF NEW WINDSOR
555 UNION AVE.
NEW WINDSOR, NY 12553

CONTROL BUILDING - SECTIONS

REVISIONS

NO.	DESCRIPTION	DATE

ISSUED DATE:	21 NOV, 2024
DESIGNED BY:	AW
DRAWN BY:	TS, EDIII, CH
CHECKED BY:	AW
REVIEWED BY:	ML

SHEET NO.
A-904

PROJECT # 18-732 PHASE #

C:\Users\ryder\Documents\18-732 Caesar's Lane - Control Building_ryderAYRWS_ryderAYRWS.rvt 11/21/2024 12:01:45 PM

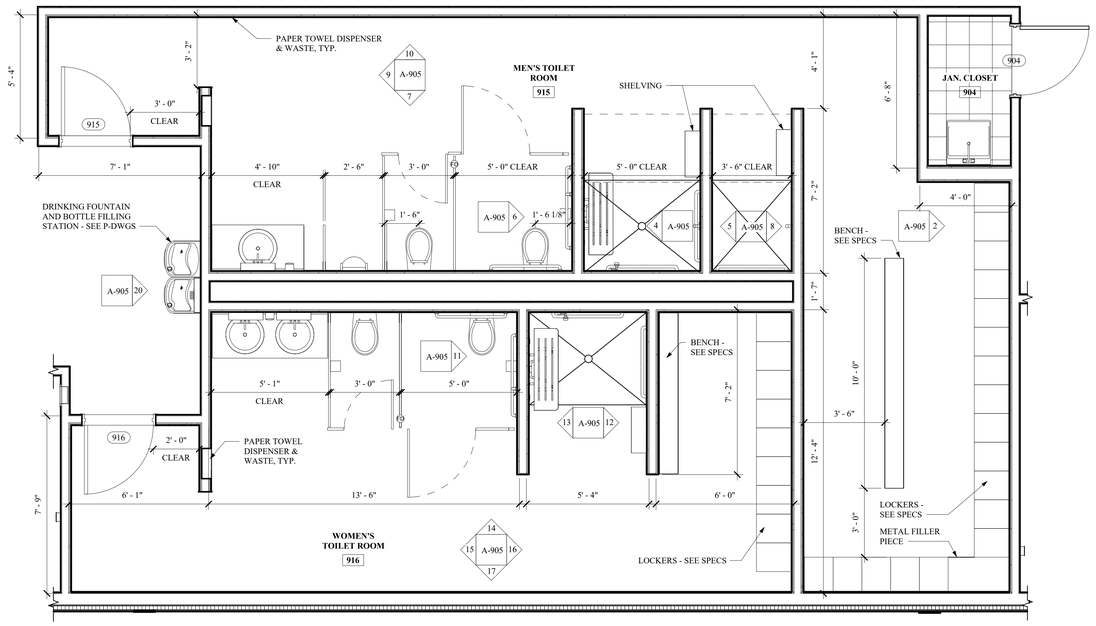

1 A-905 MEN'S TOILET ROOM PLAN
SCALE: 3/8" = 1'-0"

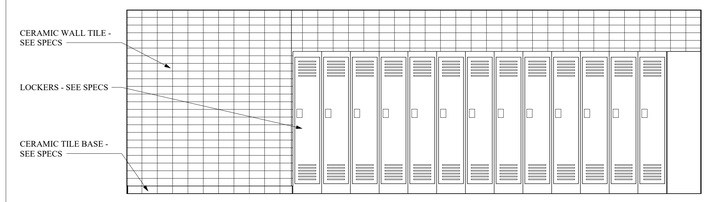

2 A-905 MEN'S LOCKER ROOM ELEVATION
SCALE: 3/8" = 1'-0"

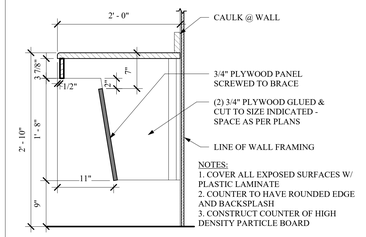

3 A-905 LAVATORY COUNTER DETAIL, TYP.
SCALE: 1" = 1'-0"

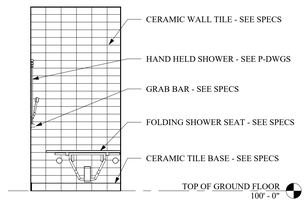

4 A-905 MEN'S SHOWER ELEVATION
SCALE: 3/8" = 1'-0"

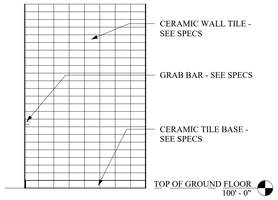

5 A-905 MEN'S SHOWER ELEVATION
SCALE: 3/8" = 1'-0"

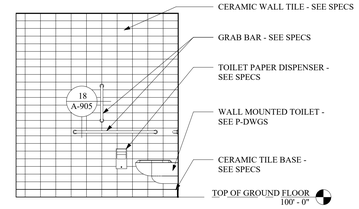

6 A-905 MEN'S TOILET ROOM ELEVATION
SCALE: 3/8" = 1'-0"

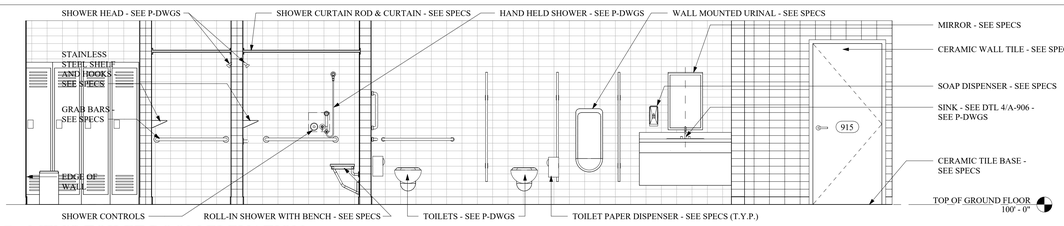

7 A-905 MEN'S TOILET ROOM ELEVATION
SCALE: 3/8" = 1'-0"

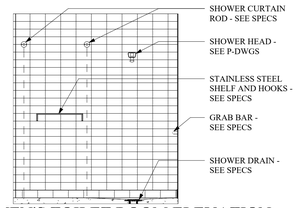

8 A-905 MEN'S TOILET ROOM ELEVATION
SCALE: 3/8" = 1'-0"

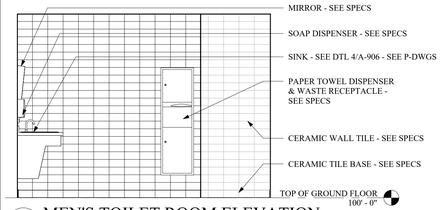

9 A-905 MEN'S TOILET ROOM ELEVATION
SCALE: 3/8" = 1'-0"



10 A-905 MEN'S TOILET ROOM ELEVATION
SCALE: 3/8" = 1'-0"

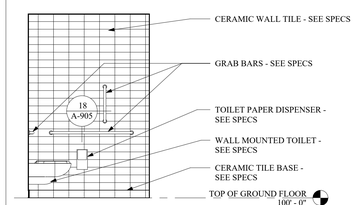

11 A-905 WOMEN'S TOILET ROOM ELEVATION
SCALE: 3/8" = 1'-0"

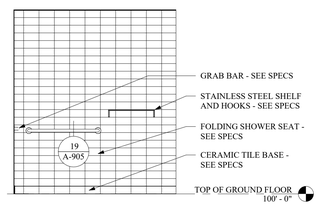

12 A-905 WOMEN'S SHOWER ELEVATION
SCALE: 3/8" = 1'-0"

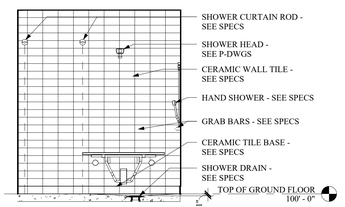

13 A-905 WOMEN'S TOILET ROOM ELEVATION
SCALE: 3/8" = 1'-0"

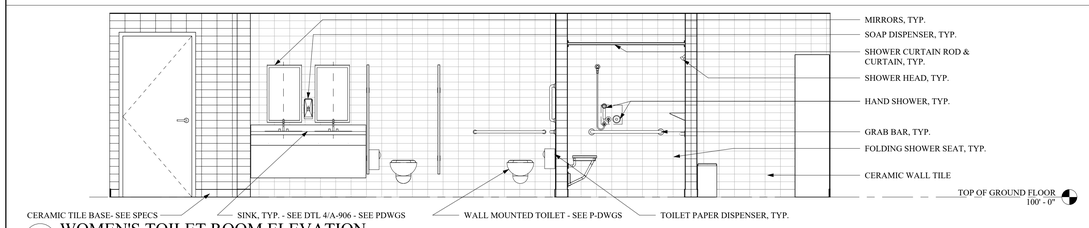

14 A-905 WOMEN'S TOILET ROOM ELEVATION
SCALE: 3/8" = 1'-0"

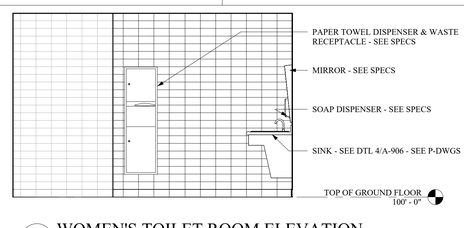

15 A-905 WOMEN'S TOILET ROOM ELEVATION
SCALE: 3/8" = 1'-0"

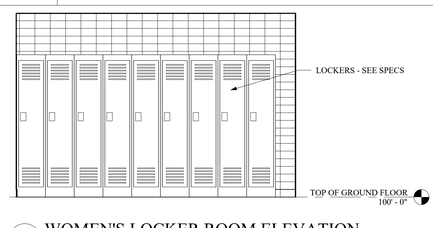

16 A-905 WOMEN'S LOCKER ROOM ELEVATION
SCALE: 3/8" = 1'-0"

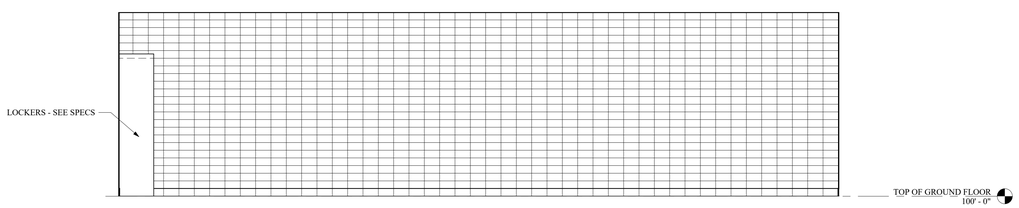

17 A-905 WOMEN'S TOILET ROOM ELEVATION
SCALE: 3/8" = 1'-0"

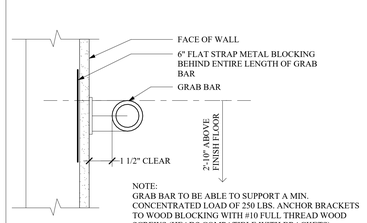

18 A-905 GRAB BAR DETAIL, TYP.
SCALE: 3" = 1'-0"

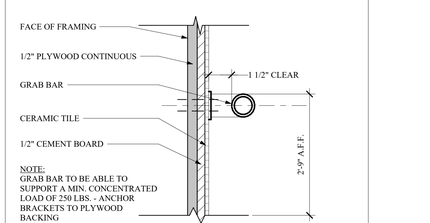

19 A-905 GRAB BAR AT SHOWER DETAIL, TYP.
SCALE: 3" = 1'-0"

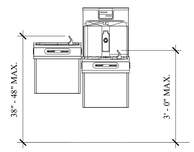

20 A-905 DRINKING FOUNTAINS
SCALE: 1/2" = 1'-0"

MHE ENGINEERING
33 Airport Center Drive, Suite 202
New Windsor, NY 12553
(845) 567-3100
111 Wheatfield Drive, Suite 1
Milford, PA 18337
(570) 296-2765

BID SET

UDIG·NY SAFE DIGGING STARTS HERE CALL 811

UNAUTHORIZED ADDITION OR ALTERATION OF THIS PLAN IS A VIOLATION OF SECTION 7209(2) OF THE NEW YORK STATE EDUCATION LAW.

ALL PRODUCTION & INTELLECTUAL PROPERTY RIGHTS RESERVED ©

CAESARS LANE WWTP EXPANSION PROJECT: PHASE 1
145 CAESARS LN.
NEW WINDSOR, NY 12553
FOR TOWN OF NEW WINDSOR
555 UNION AVE.
NEW WINDSOR, NY 12553

CONTROL BUILDING - INTERIOR PLAN, ELEVATIONS & DETAILS

REVISIONS

NO.	DESCRIPTION	DATE

ISSUED DATE:	21 NOV, 2024
DESIGNED BY:	AW
DRAWN BY:	TS, CH, EDIII
CHECKED BY:	AW
REVIEWED BY:	ML

SHEET NO.
A-905

PROJECT # 18-732 PHASE #

C:\Users\dpiter\Documents\18-732\Caesar's Lane - Control Building_dpiterYHWS_dpiterYHWS.rvt 11/21/2024 12:04:47 PM

EQUIPMENT AND FURNITURE LOCATIONS FOR REFERENCE PURPOSES ONLY

NOT IN CONTRACT UNLESS NOTED OTHERWISE

LAB EQUIPMENT

E-1	MICROSCOPE
E-2	DO METER
E-3	BENCH pH METER
E-4	(2) REFRIGRATOR/ FREEZER - SEE SPECS
E-5	ANALYTICAL BALANCE
E-6	MOISTURE DETERMINATION BALANCE
E-7	(2) DRYING OVEN IN FUME HOOD - SEE SPECS
E-8	TOP LOADER BALANCE
E-9	FUME HOOD - SEE SPECS
E-10	VACUUM PRESSURE PUMP
E-11	SAFETY SHOWER & EYE WASH - SEE P-DWGS & SPECS
E-12	(2) CABINET TYPE DESICCATOR
E-13	ACID CABINET - SEE SPECS
E-14	COMPOSITE SAMPLERS
E-15	DISHWASHER - SEE SPECS
E-16	CORROSIVE CABINET - SEE SPECS

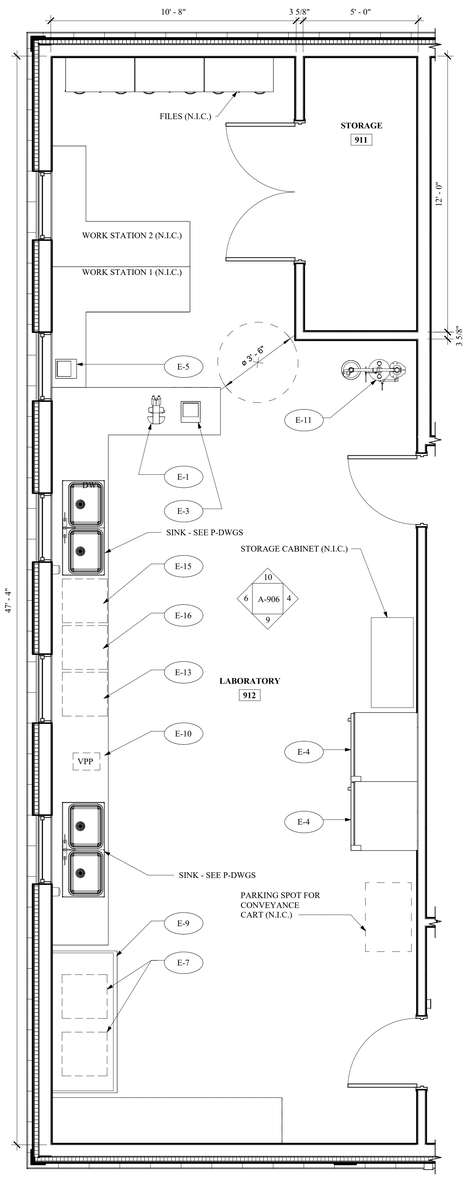

8 A-906 LAB FLOOR PLAN
SCALE: 3/8" = 1'-0"

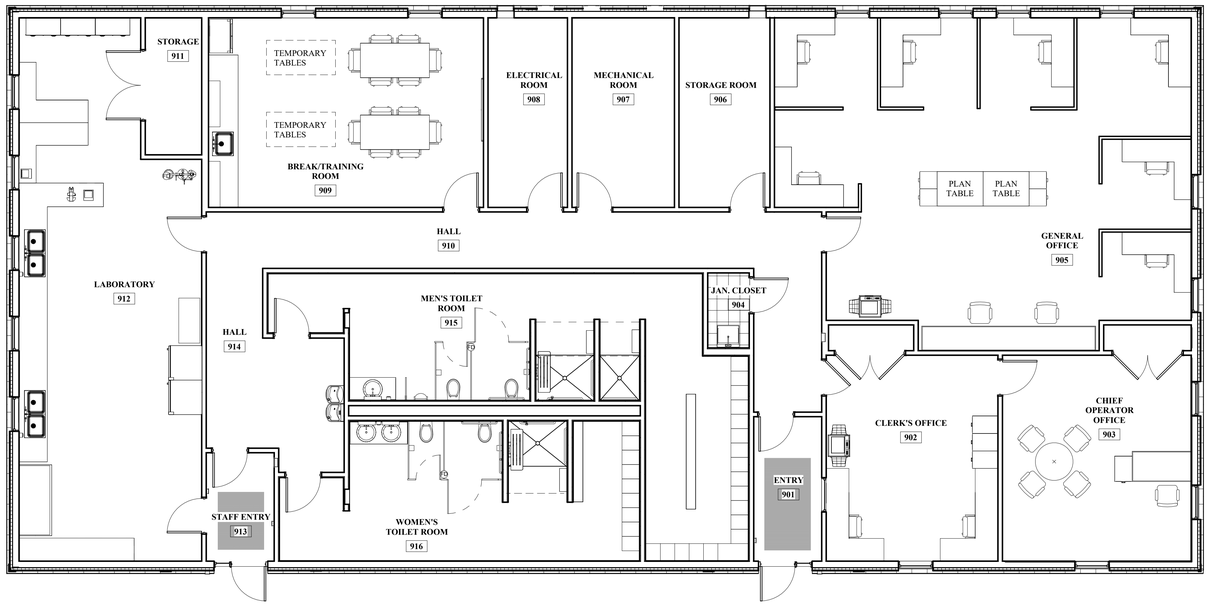

2 A-906 GROUND FLOOR FURNITURE PLAN
SCALE: 3/16" = 1'-0"

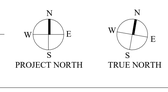

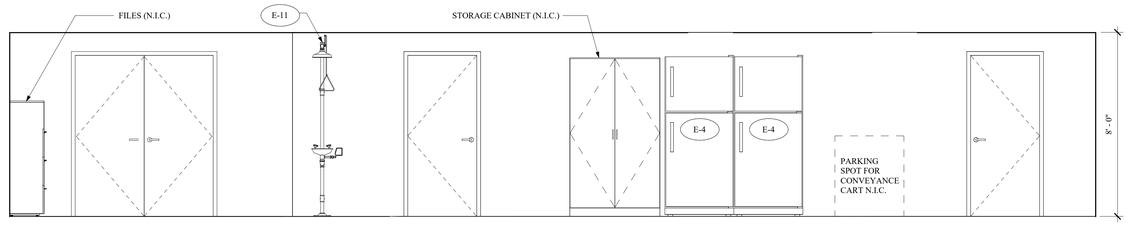

4 A-906 LAB ELEVATION
SCALE: 3/8" = 1'-0"

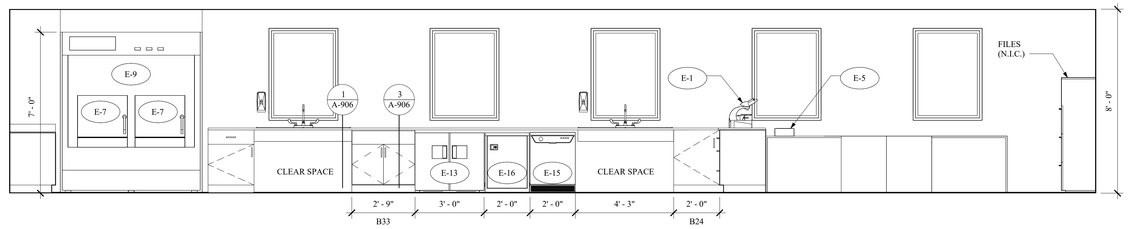

6 A-906 LAB ELEVATION
SCALE: 3/8" = 1'-0"

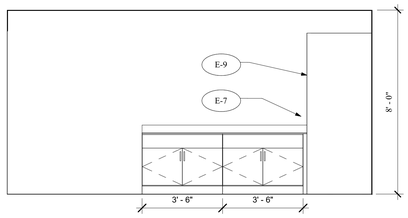

9 A-906 LAB ELEVATION
SCALE: 3/8" = 1'-0"

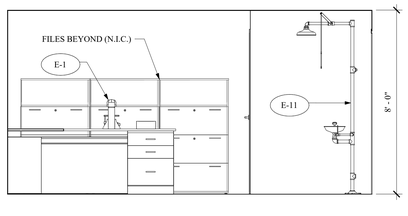

10 A-906 LAB ELEVATION
SCALE: 3/8" = 1'-0"

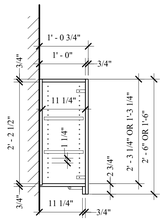

11 A-906 WALL CABINET DETAIL
SCALE: 3/4" = 1'-0"

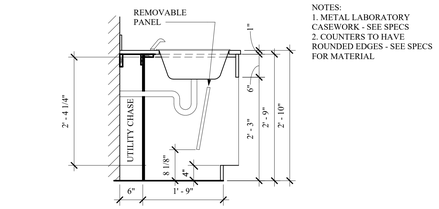

NOTES:
1. METAL LABORATORY CASEWORK - SEE SPECS
2. COUNTERS TO HAVE ROUNDED EDGES - SEE SPECS FOR MATERIAL

1 A-906 METAL LAB CASEWORK @ SINK
SCALE: 3/4" = 1'-0"

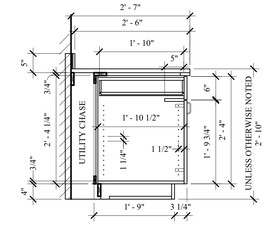

NOTES:
1. METAL LABORATORY CASEWORK - SEE SPECS
2. COUNTERS TO HAVE ROUNDED EDGES - SEE SPECS FOR MATERIAL

3 A-906 METAL LAB CASEWORK DRAWER W/ DOOR
SCALE: 3/4" = 1'-0"

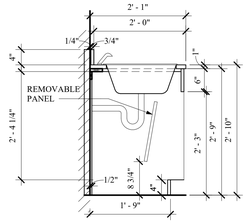

NOTES:
1. CABINET DOORS TO BE SOLID WOOD
2. WOOD VENEER AT ALL EXPOSED SURFACES OF CABINET BODY
3. COUNTERS TO HAVE ROUNDED EDGES - SEE SPECS FOR MATERIAL

5 A-906 WOOD CABINET SINK BASE
SCALE: 3/4" = 1'-0"

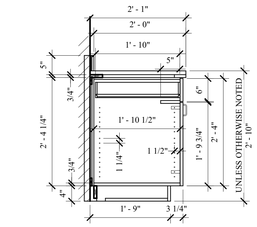

NOTES:
1. CABINET DOORS TO BE SOLID WOOD
2. WOOD VENEER AT ALL EXPOSED SURFACES OF CABINET BODY
3. COUNTERS TO HAVE ROUNDED EDGES - SEE SPECS FOR MATERIAL

7 A-906 WOOD BASE CABINET WITH DOOR
SCALE: 3/4" = 1'-0"

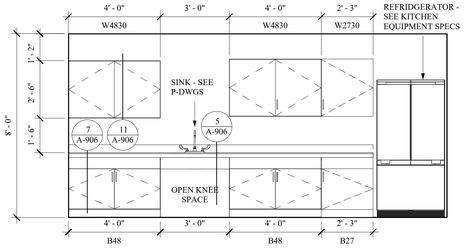

12 A-906 BREAK ROOM ELEVATION
SCALE: 3/8" = 1'-0"

C:\Users\ahgibe\Documents\18-732 Caesars Lane - Control Building_AhgibeAYRWS_AhgibeAYRWS.rvt 11/21/2024 12:04:48 PM

MHE ENGINEERING
33 Airport Center Drive, Suite 202
New Windsor, NY 12553
(845) 567-3100
111 Wheatfield Drive, Suite 1
Milford, PA 18337
(570) 296-2765

BID SET

UDIG·NY SAFE DIGGING STARTS HERE CALL 811

UNAUTHORIZED ADDITION OR ALTERATION OF THIS PLAN IS A VIOLATION OF SECTION 7209(2) OF THE NEW YORK STATE EDUCATION LAW.

ALL PRODUCTION & INTELLECTUAL PROPERTY RIGHTS RESERVED ©

CAESARS LANE WWTP EXPANSION PROJECT: PHASE 1
145 CAESARS LN.
NEW WINDSOR, NY 12553
FOR TOWN OF NEW WINDSOR
555 UNION AVE.
NEW WINDSOR, NY 12553

CONTROL BUILDING - FLOOR PLAN LAB & INTERIOR ELEVATIONS

REVISIONS

NO.	DESCRIPTION	DATE

ISSUED DATE:	21 NOV, 2024
DESIGNED BY:	AW
DRAWN BY:	EDIII, CH
CHECKED BY:	AW
REVIEWED BY:	ML

SHEET NO.

A-906

PROJECT # 18-732 PHASE #

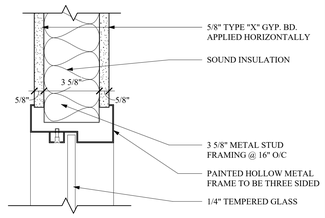

1 / A-907 LOBBY WINDOW - HEAD DETAIL
SCALE: 3" = 1'-0"

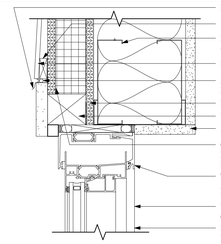

2 / A-907 WINDOW HEAD DETAIL
SCALE: 3" = 1'-0"

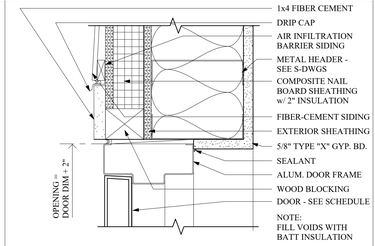

3 / A-907 EXT. DOOR - HEAD DETAIL
SCALE: 3" = 1'-0"

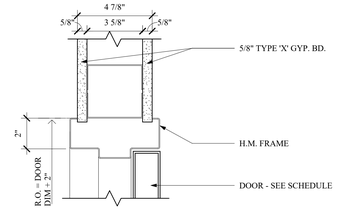

4 / A-907 INT. DOOR - HEAD DETAIL
SCALE: 3" = 1'-0"

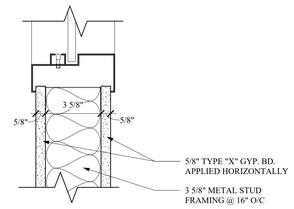

5 / A-907 LOBBY WINDOW - SILL DETAIL
SCALE: 3" = 1'-0"

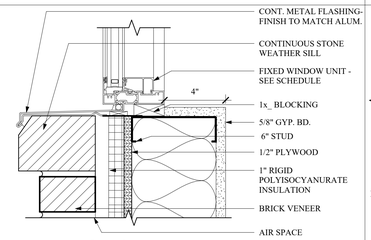

6 / A-907 WINDOW SILL DETAIL
SCALE: 3" = 1'-0"

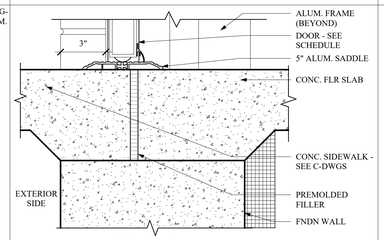

7 / A-907 EXT. DOOR - SILL DETAIL
SCALE: 3" = 1'-0"

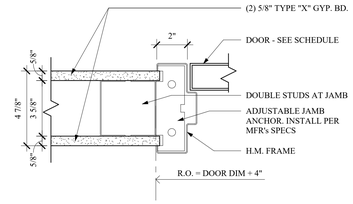

8 / A-907 INT. DOOR - JAMB DETAIL
SCALE: 3" = 1'-0"

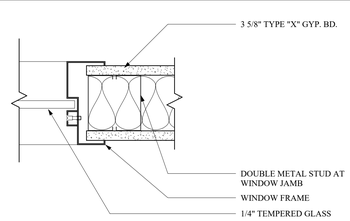

9 / A-907 LOBBY WINDOW - JAMB DETAIL
SCALE: 3" = 1'-0"

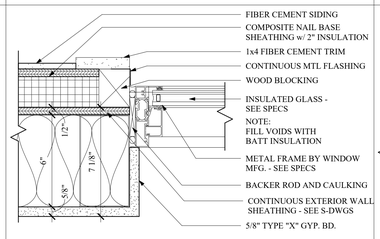

10 / A-907 WINDOW JAMB DETAIL
SCALE: 3" = 1'-0"

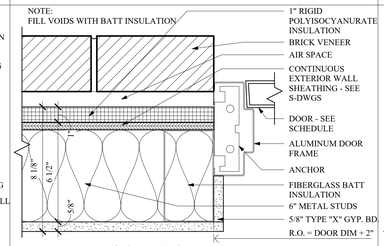

11 / A-907 EXT. DOOR - LOWER JAMB DETAIL
SCALE: 3" = 1'-0"

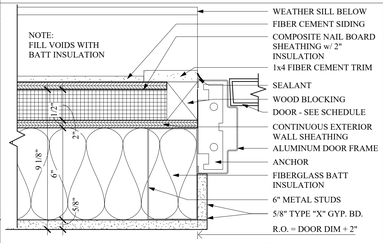

12 / A-907 EXT. DOOR - UPPER JAMB DETAIL
SCALE: 3" = 1'-0"

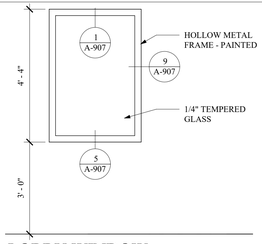

13 / A-907 LOBBY WINDOW
SCALE: 1/2" = 1'-0"

WINDOW SCHEDULE

TYPE	WIDTH	HEIGHT	MATERIAL	QUANTITY	NOTES
A	3' - 0"	4' - 0"	ALUMINUM	17	

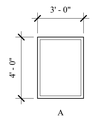

EXT. WINDOW ELEVATION

DOOR SCHEDULE

DOOR No.	LOCATION	HEIGHT	WIDTH	THICKNESS	QTY	DOOR TYPE	FRAME TYPE	SADDLE	HARDWARE GROUP	FIRE RATING	DETAILS	REMARKS
901A	ROOM 901 - EXTERIOR	7' - 0"	3' - 0"	1 3/4"	1	D	2	ALUM.	8			
901B	ROOM 901 - ROOM 910	7' - 0"	3' - 0"	1 3/4"	1	C	1		1			
902A	ROOM 910 - ROOM 902	7' - 0"	3' - 0"	1 3/4"	1	C	1		9			
902B	ROOM 902 - ROOM 902	7' - 0"	3' - 0"	1 3/4"	2	A	1		4			
903A	ROOM 902 - ROOM 903	7' - 0"	3' - 0"	1 3/4"	1	A	1		9			
903B	ROOM 903 - ROOM 903	7' - 0"	3' - 0"	1 3/4"	2	A	1		4			
904	ROOM 904 - ROOM 910	7' - 0"	3' - 0"	1 3/4"	1	A	1		10			
905	ROOM 910 - ROOM 905	7' - 0"	3' - 0"	1 3/4"	1	C	1		11			
906	ROOM 910 - ROOM 906	7' - 0"	3' - 0"	1 3/4"	1	A	1		3			
907	ROOM 907 - ROOM 910	7' - 0"	3' - 0"	1 3/4"	1	A	1		3			
908	ROOM 910 - ROOM 908	7' - 0"	3' - 0"	1 3/4"	1	A	1		3			
909	ROOM 910 - ROOM 909	7' - 0"	3' - 0"	1 3/4"	1	C	1		11			
911	ROOM 911 - ROOM 912	7' - 0"	3' - 0"	1 3/4"	2	A	1		4			
912A	ROOM 913 - ROOM 912	7' - 0"	3' - 0"	1 3/4"	1	C	1		6			
912B	ROOM 910 - ROOM 912	7' - 0"	3' - 0"	1 3/4"	1	C	1		5			
913A	ROOM 913 - EXTERIOR	7' - 0"	3' - 0"	1 3/4"	1	D	2	ALUM.	7			
913B	ROOM 914 - ROOM 913	7' - 0"	3' - 0"	1 3/4"	1	C	1		2			
915	ROOM 914 - ROOM 915	7' - 0"	3' - 0"	1 3/4"	1	A	1	MARBLE	12			
916	ROOM 914 - ROOM 916	7' - 0"	3' - 0"	1 3/4"	1	A	1	MARBLE	12			

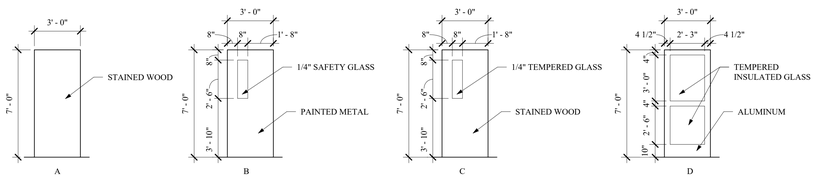

DOOR TYPES

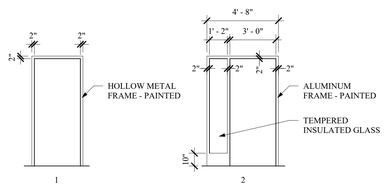

FRAME TYPES

MHE ENGINEERING
33 Airport Center Drive, Suite 202
New Windsor, NY 12553
(845) 567-3100
111 Wheatfield Drive, Suite 1
Milford, PA 18337
(570) 296-2765

BID SET

UDIG·NY SAFE DIGGING STARTS HERE CALL 811

UNAUTHORIZED ADDITION OR ALTERATION OF THIS PLAN IS A VIOLATION OF SECTION 7209(2) OF THE NEW YORK STATE EDUCATION LAW.

ALL PRODUCTION & INTELLECTUAL PROPERTY RIGHTS RESERVED ©

CAESARS LANE WWTP EXPANSION PROJECT: PHASE 1
145 CAESARS LN.
NEW WINDSOR, NY 12553
FOR TOWN OF NEW WINDSOR
555 UNION AVE.
NEW WINDSOR, NY 12553

CONTROL BUILDING - WINDOW, DOOR & MISCELLANEOUS DETAILS & SCHEDULES

REVISIONS

NO.	DESCRIPTION	DATE

ISSUED DATE:	21 NOV, 2024
DESIGNED BY:	AW
DRAWN BY:	CH, EDIII
CHECKED BY:	AW
REVIEWED BY:	ML

SHEET NO.

A-907

PROJECT # 18-732 PHASE #

C:\Users\dyoder\Documents\18-732 Caesar's Lane - Control Building_dyoderVHWWS_dyoderVHWWS.rvt 11/21/2024 12:04:49 PM

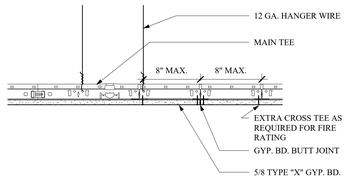

1 A-908 GYP. BD. SUSPENSION DETAIL
SCALE: 3" = 1'-0"

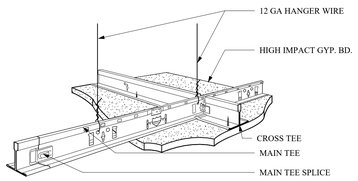

2 A-908 GYP. BD. SUSPENSION DETAIL
SCALE: 3" = 1'-0"

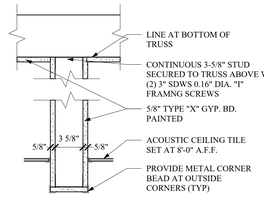

3 A-908 CEILING HEIGHT CHANGE DETAIL
SCALE: 1 1/2" = 1'-0"

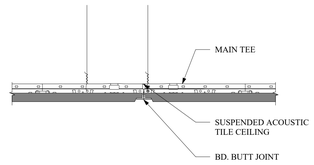

4 A-908 ACOUSTIC CEILING TILE DTL
SCALE: 3" = 1'-0"

NOTES:
1. ALL CEILING HEIGHTS TO BE AT 8'-0" A.F.F. UNLESS NOTED OTHERWISE

3. INSTALL 5/8" GYP. BD. AT BOTTOM OF TRUSSES THROUGHOUT ENTIRE BUILDING

LEGEND

- 2' x 2' LED LIGHT -SEE ELECTRICAL DWG
- RECESSED CEILING LIGHT -SEE ELECTRICAL DWG
- SURFACE MOUNTED CEILING LIGHT -SEE ELECTRICAL DWG
- CEILING DIFFUSER -SEE MECHANICAL DWG
- RETURN AIR GRILL -SEE MECHANICAL DWG
- (CO) CARBON MONOXIDE DETECTOR -SEE ELECTRICAL DWG
- (SD) SMOKE DETECTOR -SEE ELECTRICAL DWG
- (H) HEAT DETECTOR -SEE ELECTRICAL DWG
- (OS) OCCUPANCY SENSOR -SEE ELECTRICAL DWG

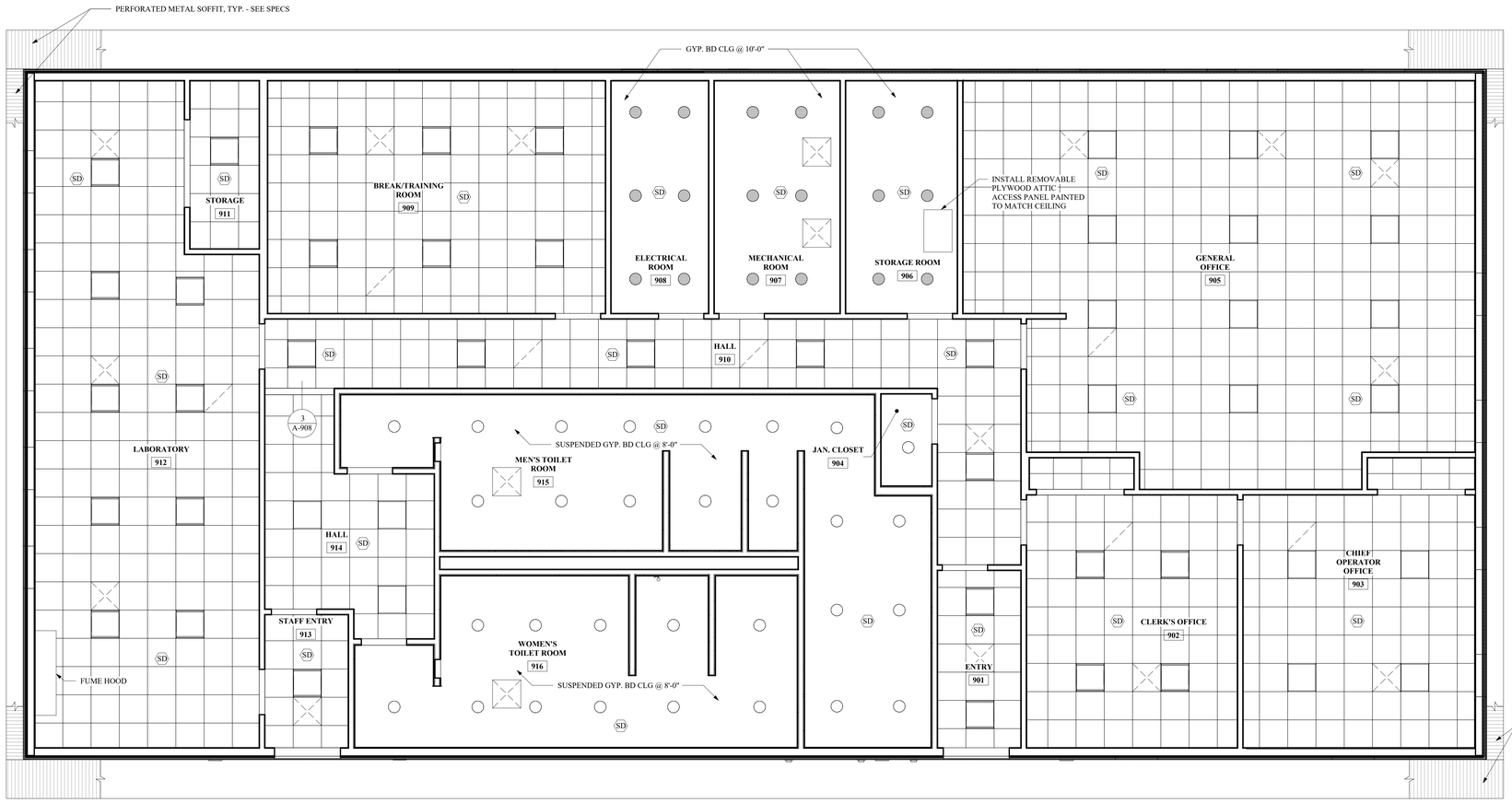

REFLECTED CEILING PLAN
SCALE: 1/4" = 1'-0"

PROJECT NORTH

TRUE NORTH

MHE ENGINEERING
33 Airport Center Drive, Suite 202
New Windsor, NY 12553
(845) 567-3100
111 Wheatfield Drive, Suite 1
Milford, PA 18337
(570) 296-2765

BID SET

UDIG·NY SAFE DIGGING STARTS HERE CALL 811

UNAUTHORIZED ADDITION OR ALTERATION OF THIS PLAN IS A VIOLATION OF SECTION 7209(2) OF THE NEW YORK STATE EDUCATION LAW.

ALL PRODUCTION & INTELLECTUAL PROPERTY RIGHTS RESERVED ©

CAESARS LANE WWTP EXPANSION PROJECT: PHASE 1

145 CAESARS LN.
NEW WINDSOR, NY 12553

FOR TOWN OF NEW WINDSOR
555 UNION AVE.
NEW WINDSOR, NY 12553

CONTROL BUILDING - REFLECTED CEILING PLAN & CEILING DETAILS

REVISIONS

NO.	DESCRIPTION	DATE

ISSUED DATE:	21 NOV, 2024
DESIGNED BY:	AW
DRAWN BY:	TS, EDIII, CH
CHECKED BY:	AW
REVIEWED BY:	ML

SHEET NO.

A-908

PROJECT # 18-732 PHASE #

C:\Users\dyoke\Documents\18-732 Ceasar's Lane - Control Building_dyokeVBVWR_dyokeVBVWR.rvt 11/21/2024 12:04:30 PM

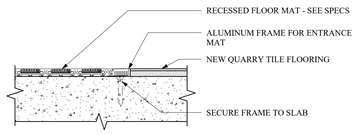

QUARRY TILE TO ENTRANCE MAT

1 A-909 RECESSED FLOOR MAT DETAIL
SCALE: 3" = 1'-0"

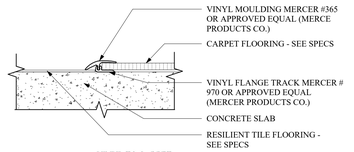

VINYL TO CARPET

2 A-909 FLOOR TRANSITION DETAIL
SCALE: 3" = 1'-0"

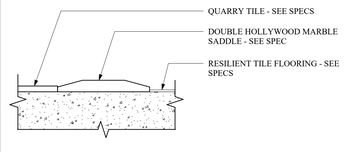

QUARRY TILE TO RUBBER FLOOR TILE OR RESILIENT TILE FLOORING

3 A-909 FLOOR TRANSITION DETAIL
SCALE: 3" = 1'-0"

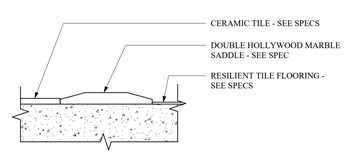

CERAMIC TILE TO RESILIENT TILE FLOORING

4 A-909 FLOOR TRANSITION DETAIL
SCALE: 3" = 1'-0"

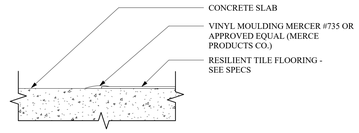

RESILIENT TILE FLOORING TO CONCRETE SLAB

5 A-909 FLOOR TRANSITION DETAIL
SCALE: 3" = 1'-0"

FINISH SCHEDULE

ROOM No.	ROOM NAME (NORTH WALL = N, SOUTH WALL = S, EAST WALL = E, WEST WALL = W, ALL WALLS = X)	FLOOR: RESILIENT TILE FLOORING	FLOOR: RUBBER FLOOR TILE	FLOOR: CARPET	FLOOR: CERAMIC FLOOR TILE CT-1	FLOOR: CERAMIC FLOOR TILE CT-2	FLOOR: RECESSED FLOOR MAT	FLOOR: CONCRETE W/ SEALANT	BASE: 4" RESILIENT COVE	BASE: CERAMIC TILE BASE	BASE: CERAMIC TILE BASE	BASE: NONE	WALLS: 5/8" TYPE "X" GYP. BD - PAINTED	WALLS: CERAMIC WALL TILE CT-3	CEILING: ACOUSTIC CEILING TILE	CEILING: 5/8" TYPE "X" GYP. BD. CLG - PAINTED	NOTES
901	ENTRY					X	X					X	X		X		
902	CLERK'S OFFICE			X					X				X		X		
903	CHIEF OPERATOR OFFICE			X					X				X		X		
904	JAN. CLOSET	X							X				X			X	
905	GENERAL OFFICE	X							X				X		X		
906	STORAGE ROOM	X							X				X			X	
907	MECHANICAL ROOM							X				X	X			X	
908	ELECTRICAL ROOM							X				X	X			X	
909	BREAK/TRAINING ROOM	X							X				X		X		
910	HALL	X							X				X		X		
911	STORAGE		X							X			X		X		
912	LABORATORY		X						X				X		X		
913	STAFF ENTRY					X	X				X		X		X		
914	HALL	X							X				X		X		
915	MEN'S TOILET ROOM				X					X				X		X	
916	WOMEN'S TOILET ROOM				X					X				X		X	

NOTES: -CLOSETS TO BE FINISHED THE SAME AS THE ADJOINING ROOM UNLESS OTHERWISE NOTED
-SEE REFLECTED CEILING PLAN FOR CEILING HEIGHTS

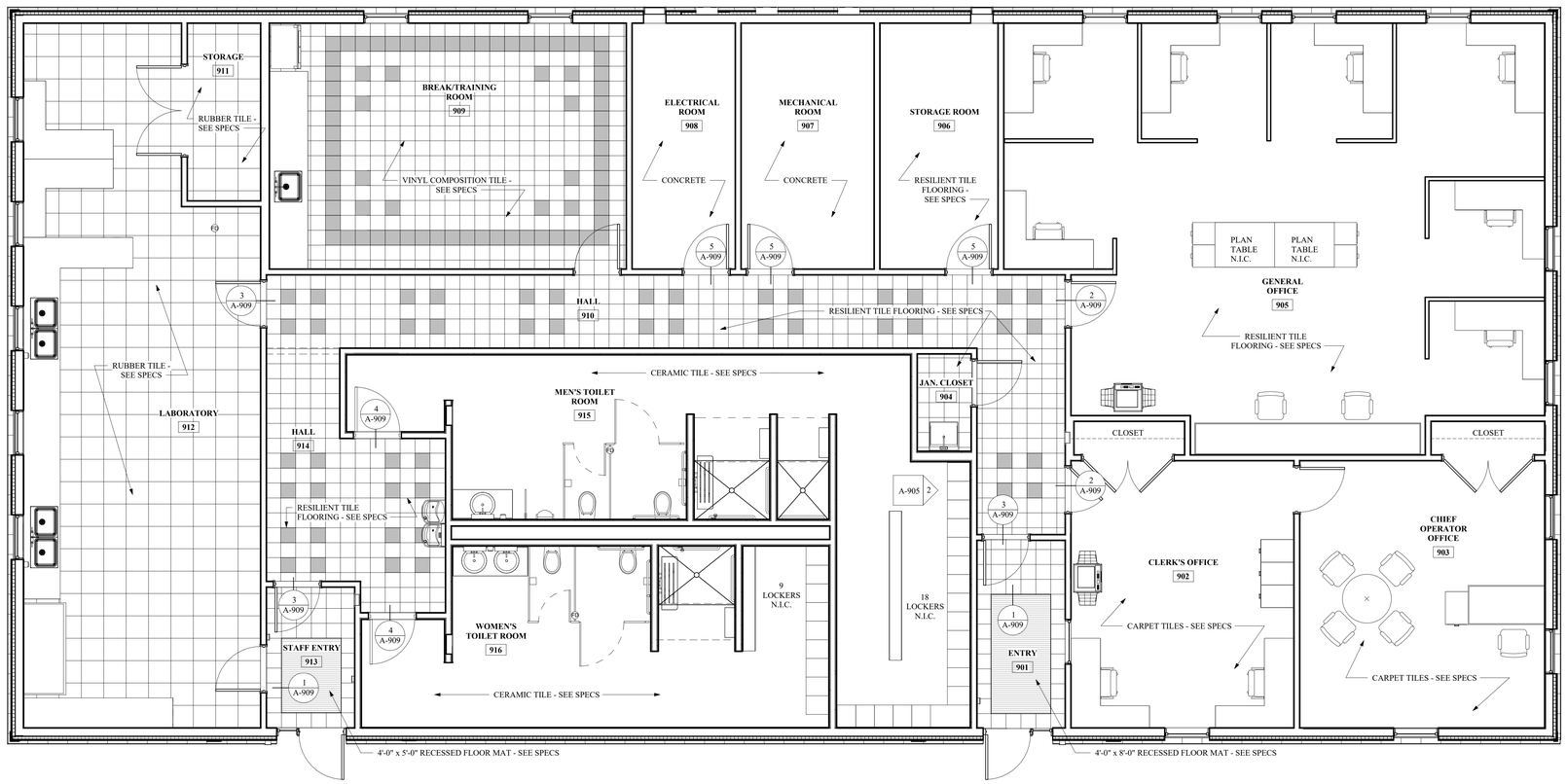

FLOOR FINISH PLAN
SCALE: 1/4" = 1'-0"

MHE ENGINEERING
33 Airport Center Drive, Suite 202
New Windsor, NY 12553
(845) 567-3100
111 Wheatfield Drive, Suite 1
Milford, PA 18337
(570) 296-2765

BID SET

UDIG·NY SAFE DIGGING STARTS HERE CALL 811

UNAUTHORIZED ADDITION OR ALTERATION OF THIS PLAN IS A VIOLATION OF SECTION 7209(2) OF THE NEW YORK STATE EDUCATION LAW.

ALL PRODUCTION & INTELLECTUAL PROPERTY RIGHTS RESERVED ©

CAESARS LANE WWTP EXPANSION PROJECT: PHASE 1
145 CAESARS LN.
NEW WINDSOR, NY 12553
FOR TOWN OF NEW WINDSOR
555 UNION AVE.
NEW WINDSOR, NY 12553

CONTROL BUILDING - FINISH FLOOR PLAN, SCHEDULE & DETAILS

REVISIONS

NO.	DESCRIPTION	DATE

ISSUED DATE:	21 NOV, 2024
DESIGNED BY:	AW
DRAWN BY:	CH, EDIII
CHECKED BY:	AW
REVIEWED BY:	ML

SHEET NO.

A-909

PROJECT # 18-732 PHASE #

C:\Users\kyles\Documents\18-732 Caesar's Lane - Control Building_rkyles.YHWWS_rkyles.YHWWS.rvt 11/21/2024 12:04:11 PM

RETAINING WALL UNITS:

1. PRECAST MODULAR BLOCKS SHALL BE STONE STRONG UNITS MANUFACTURED UNDER LICENSE FROM STONE STRONG L.L.C..
2. WALL UNITS SHALL CONFORM TO ASTM C1776.
3. DIMENSION TOLERANCES FOR PRECAST MODULAR BLOCKS SHALL BE ±⅛" FOR HEIGHT, ±⅛" FOR LENGTH (ALONG FACE), AND +⅛" TO -⅛" FOR WIDTH (FACE TO TAIL).
4. CONCRETE FOR PRECAST MODULAR BLOCKS SHALL HAVE A MINIMUM 28-DAY COMPRESSIVE STRENGTH OF 4000PSI. ENTRAINED AIR CONTENT SHALL BE BETWEEN 5% AND 7%.
5. INTERNAL UNIT REINFORCEMENT OR UNREINFORCED UNITS SHALL BE PROVIDED ACCORDING TO PUBLISHED STONE STRONG ENGINEERING GUIDANCE. REINFORCED UNITS SHALL BE MARKED WITH THE TYPE OF REINFORCEMENT.
6. THE FACE PATTERN SHALL BE CHOSEN BY THE OWNER AND SELECTED FROM THE MANUFACTURER'S STANDARD MOLDS. THE COLOR OF THE UNITS SHALL BE NATURAL GRAY. A CONCRETE STAIN MAY BE FIELD APPLIED TO COLOR THE UNITS IF SPECIFIED BY THE OWNER. IF DESIRED BY OWNER, CONTRACTOR SHALL SEND PHYSICAL SAMPLES FOR REVIEW.
7. BLOCKS SHALL BE CONSISTENT AND FREE OF STAINS, DEFECTS, CRACKS, AND/OR CHIPS.
8. MINIMUM GRADE IN FRONT OF WALL - 0.75 FEET (9INCHES).

LEVELING PAD (WALL BASE) MATERIAL:

1. THE WALL BASE SHALL BE AASHTO 57 STONE AND CONFORM TO THE FOLLOWING GRADATION:

SIEVE SIZE	PERCENT PASSING
1-1/2"	100
1"	95-100
1/2"	25-60
#4	0-10
#5	0-5

2. BASE THICKNESS = 9".

UNIT FILL MATERIAL:

1. THE WALL BASE SHALL BE AASHTO 57 STONE AND CONFORM TO THE FOLLOWING GRADATION:

SIEVE SIZE	PERCENT PASSING
1-1/2"	100
1"	95-100
1/2"	25-60
#4	0-10
#5	0-5

DRAINAGE TILE:

1. DRAINAGE AGGREGATE SHALL BE DURABLE CLEAN CRUSHED STONE HAVING AT LEAST TWO FRACTURED FACES AND COMPLY WITH THE FOLLOWING GRADATION:

SIEVE SIZE	PERCENT PASSING
1 INCH	100
⅔ INCH	100 - 75
NO. 4	0 - 10
NO. 50	0 - 5

2. ROUNDED AGGREGATE (E.G. RIVER ROCK AND PEA GRAVEL) IS NOT ACCEPTABLE DRAINAGE AGGREGATE MATERIAL.
3. DRAIN TILE SHALL BE A 4" DIAMETER PERFORATED OR SLOTTED PVC OR CORRUGATED HDPE PIPE.
4. THE DRAIN TILE SHALL BE DAYLIGHTED THROUGH THE WALL AS SHOWN ON THE PLANS.
5. WHERE DRAINAGE TILE PENETRATES THROUGH FACE OF WALL, PROVIDE RODENT SCREEN.
6. PROVIDE A GEOTEXTILE FILTER FOR SEPERATION FROM RETAINED SOIL BEHIND BLOCKS.
7. GEOTEXTILE SHALL BE A NONWOVEN FABRIC, TYPICAL OF MIRAFI 140N OR APPROVED EQUAL.

FOUNDATION SOIL

1. THE FOUNDATION SOIL IS ASSUMED TO BE SAND EXHIBITING A MINIMUM EFFECTIVE INTERNAL FRICTION ANGLE OF 30°, A MOIST UNIT WEIGHT OF 135 PCF, AND A COHESION OF 0 PSF.
2. FOUNDATION SOIL SHALL BE EXAMINED AND TESTED TO CONFIRM THAT THE ACTUAL CONDITIONS MEET OR EXCEED THE DESIGN ASSUMPTIONS.
3. CONTRACTOR SHALL COMPACT SUBGRADE TO 95% MODIFIED PROCTOR PRIOR TO PLACEMENT OF WALL BASE MATERIAL.
4. ALLOWABLE BEARING CAPACITY OF 4000 PSF
5. THE FOUNDATION SOIL SHALL BE FREE OF DEBRIS, HIGH PLASTIC CLAY, FROST, ICE, ORGANIC MATTER (<1%), AND OTHER DELETERIOUS MATERIALS.

SOIL COMPACTION

1. COARSE GRAINED SOILS: ALL COARSE GRAINED SOIL SHALL BE PLACED IN MAXIMUM 9-INCH LOOSE LIFTS AND COMPACTED TO A MINIMUM OF 95% OF ITS MODIFIED PROCTOR DENSITY AS DETERMINED BY ASTM D1557. THE MOISTURE CONTENT OF THE BACKFILL MATERIAL, PRIOR TO AND DURING CONSTRUCTION, SHALL BE UNIFORMLY DISTRIBUTED THROUGHOUT EACH LAYER AND SHALL BE WITHIN A RANGE OF 2% BELOW TO 2% ABOVE OPTIMUM MOISTURE CONTENT.
2. FINE GRAINED SOILS: ALL FINE GRAINED SOIL SHALL BE PLACED IN MAXIMUM 8-INCH LOOSE LIFTS AND COMPACTED TO A MINIMUM OF 95% OF ITS MODIFIED PROCTOR DENSITY AS DETERMINED BY ASTM D1557. THE MOISTURE CONTENT OF THE BACKFILL MATERIAL, PRIOR TO AND DURING CONSTRUCTION, SHALL BE UNIFORMLY DISTRIBUTED THROUGHOUT EACH LAYER AND SHALL BE WITHIN A RANGE OF 2% BELOW TO OPTIMUM MOISTURE CONTENT.
3. CRUSHED STONE: CRUSHED STONE SHALL BE PLACED IN MAXIMUM 12-INCH LOOSE LIFTS AND COMPACTED WITH A MINIMUM OF THREE (3) PASSES OF A VIBRATORY COMPACTOR (OR OTHER SUITABLE EQUIPMENT) CAPABLE OF EXERTING A MINIMUM OF 3,000 LBS OF CENTRIFUGAL FORCE AND TO THE SATISFACTION OF THE GEOTECHNICAL ENGINEER.
4. ONLY LIGHTWEIGHT HAND-OPERATED COMPACTION EQUIPMENT SHALL BE USED WITHIN 3-FEET OF THE BACK OF WALL DURING CONSTRUCTION.

GENERAL NOTES

1. THE DESIGN OF THE GRAVITY RETAINING WALL WAS PERFORMED UTILIZING STONE STRONG SYSTEMS. IF THE CONTRACTOR ELECTS TO UTILIZE A DIFFERENT RETAINING WALL SYSTEM, THE CONTRACTOR MUST SUBMIT PLANS AND CALCULATIONS SIGNED AND SEALED BY AN ENGINEER LICENSED IN NEW YORK STATE TO THE ENGINEER OF RECORD FOR REVIEW PRIOR TO ORDERING MATERIALS.
2. CONTRACTOR TO PROVIDE SHOP DRAWING INDICATING BLOCK TYPES AND LOCATIONS FOR REVIEW PRIOR TO CONSTRUCTION.
3. ERECT UNITS IN ACCORDANCE WITH MANUFACTURER'S SPECIFICATIONS.
4. THE CONTRACTOR IS RESPONSIBLE FOR QUALITY CONTROL OF GRAVITY RETAINING WALL INSTALLATION.
5. THE OWNER WILL ENGAGE A QUALIFIED THIRD PARTY INSPECTION AGENCY TO PERFORM SPECIAL INSPECTIONS LISTED ON THIS SHEET.
6. THE CONTRACTOR SHALL CALL 811 TO HAVE UTILITIES LOCATED AND ANY OTHER APPLICABLE ENTITY BEFORE BEGINNING WORK. IT IS THE CONTRACTOR'S RESPONSIBILITY TO FIELD VERIFY ALL LOCATIONS AND DEPTHS OF EXISTING UTILITIES PRIOR TO COMMENCING CONSTRUCTION AND AVOID IMPACTING THEM.
7. THE CONTRACTOR SHALL COORDINATE RELOCATION OF ALL EXISTING CONDUITS AND SERVICES WITH THE UTILITY PROVIDER. IF CONFLICTS EXIST, NOTIFY THE ENGINEER IMMEDIATELY.
8. THE CONTRACTOR SHALL BE RESPONSIBLE FOR COMPLYING WITH ALL FEDERAL, STATE, AND LOCAL REQUIREMENTS FOR EXECUTION OF WORK, INCLUDING LOCAL BUILDING INSPECTION AND CURRENT OSHA STANDARDS.
9. THE WORK SHALL BE PERFORMED IN A GENERAL SEQUENCE DEVELOPED BY THE CONTRACTOR IN ACCORDANCE WITH THE REQUIREMENTS OF THE CONTRACT. THE CONTRACTOR SHALL BE SOLELY RESPONSIBLE FOR THE MEANS AND METHODS OF CONSTRUCTION AND FOR THE SEQUENCES AND PROCEDURES TO BE USED.
10. EXCAVATION SUPPORT, IF REQUIRED, IS THE RESPONSIBILITY OF THE CONTRACTOR, INCLUDING THE STABILITY OF THE EXCAVATION AND ITS INFLUENCE ON ADJACENT PROPERTIES AND STRUCTURES.
11. IF THE CONTRACTOR FINDS A CONFLICT, ERROR, OR DISCREPANCY WITHIN OR BETWEEN THE CONTRACT DOCUMENTS, DESIGN PLANS AND EXISTING CONDITIONS, THE CONTRACTOR SHALL IMMEDIATELY REPORT THE ISSUE TO THE RESPECTIVE ENGINEER IN WRITING. THE CONTRACTOR SHALL OBTAIN A WRITTEN INTERPRETATION OR CLARIFICATION FROM THE ENGINEER PRIOR TO PROCEEDING WITH CONSTRUCTION. WORK DONE BEFORE THE ENGINEER RENDERS A DECISION IS AT THE SOLE RISK OF THE CONTRACTOR.
12. A GEOTECHNICAL REPORT WAS SUPPLIED FOR THE PROJECT AND CAN BE FOUND WITHIN THE CONTRACT. THE FIELD SOIL PROPERTIES MUST BE VERIFIED BY THE TESTING AGENCY OF RECORD AND THE WALL DESIGNER NOTIFIED OF SOILS DIFFERENT THAN THOSE NOTED HEREIN.
13. WALL HEIGHTS SHOWN MUST NOT BE EXCEEDED WITHOUT THE CONSULTATION AND APPROVAL OF THE WALL DESIGNER.
14. THESE PLANS SHALL BE USED IN CONJUNCTION WITH THE CIVIL, MECHANICAL, ELECTRICAL, AND PLUMBING PLAN SETS.

DESIGN INFORMATION

1. DESIGN METHOD: NCMA
2. RETAINING WALL INFORMATION: UNIT TYPE: SEGMENTAL RETAINING WALL BLOCK

LOADING CONDITIONS:
1. LIVE LOAD SURCHARGE: N/A
2. DEAD LOAD SURCHARGE (BUILDING): 0 PSF
3. HYDROSTATIC LOADING: NONE

IN-SITU SOIL (RETAINED SOIL) VALUES:
1. UNIT WEIGHT: 135 PCF
2. INTERNAL FRICTION ANGLE: 30°
3. COHESION = 0 PSF

WALL GEOMETRY:
1. TOE SLOPE: VARIES (SEE GRADING PLAN)
2. BACK SLOPE: VARIES (SEE GRADING PLAN)
3. BATTER: 5.0°

FACTORS OF SAFETY:
1. INTERNAL STABILITY: (MINIMUM FOS)
   - 1.1. SLIDING: 1.5
   - 1.2. OVERTURNING: 1.5
2. EXTERNAL STABILITY :
   - 2.1. BASE SLIDING 1.5
   - 2.2. BEARING 2.0
   - 2.3. OVERTURNING 1.5

SEISMIC:
1. SEISMIC ANALYSIS IS NOT REQUIRED PER THE 2020 BUILDING CODE OF NEW YORK STATE SECTION 1807.2.2 (SITE CLASS C).

TECHNICAL REFERENCES

1. AASHTO LRFD BRIDGE DESIGN SPECIFICATIONS (8TH EDITION, 2017)
2. MINIMUM DESIGN LOADS FOR BUILDINGS AND OTHER STRUCTURES - ASCE/SEI 7-16
3. NEW YORK STATE BUILDING CODE, 2020 EDITION.
4. OCCUPATIONAL SAFETY AND HEALTH ADMINISTRATION (OSHA) TECHNICAL MANUAL.
5. UNIFIED SOIL CLASSIFICATION SYSTEM (USCS).

TESTING REFERENCES

1. AMERICAN SOCIETY OF TESTING MATERIALS (ASTM) INTERNATIONAL.
2. AMERICAN CONCRETE INSTITUTE (ACI).
3. NATIONAL CONCRETE MASONRY ASSOCIATION (NCMA)

GEOTECHNICAL NOTES

1. ALLOWABLE SOIL BEARING PRESSURES ARE AS FOLLOWS FOR THE FOLLOWING AND LOCATIONS PER THE GEOTECHNICAL EVALUATION REPORT PERFORMED BY TECTONIC ENGINEERING CONSULTANTS, GEOLOGISTS, AND LAND SURVEYORS, D.P.C.:
   - 1.1. ALLOWABLE BEARING PRESSURE = 4,000 PSF
2. THESE SOIL BEARING PRESSURES ARE FOUND IN SECTION 9.1 OF THE GEOTECHNICAL EVALUATION REPORT PREPARED BY TECTONIC.
3. CONTRACTOR SHALL VERIFY BEARING CAPACITIES PRIOR TO THE PLACEMENT OF ANY FOUNDATIONS IN THE COINCIDING AREAS.
4. FOR ADDITIONAL GEOTECHNICAL INFORMATION, SEE THE SITE SPECIFIC GEOTECHNICAL REPORT PREPARED BY TECTONIC PROVIDED IN THE CONTRACT.

SPECIAL INSPECTIONS:

ALL SPECIAL INSPECTIONS LISTED ARE IN ADDITION TO ALL INSPECTION REQUIRED BY STATE AND LOCAL BUILDING CODES. ALL SPECIAL INSPECTIONS SHALL BE PERFORMED BY AN AGENCY RETAINED AND PAID BY THE OWNER OR OWNER'S REPRESENTATIVE. THE APPROVED AGENCY SHALL PROVIDE ALL INFORMATION AS NECESSARY FOR THE BUILDING OFFICIAL TO DETERMINE THAT THE AGENCY MEETS THE APPLICABLE REQUIREMENTS. COPIES OF NECESSARY TEST AND INSPECTION RECORDS SHALL BE FILED WITH THE BUILDING OFFICIAL AND REGISTERED DESIGN PROFESSIONAL. ALL SPECIAL INSPECTIONS AND REPORTS SHALL BE IN ACCORDANCE WITH CHAPTER 17 OF THE 2020 NEW YORK STATE BUILDING CODE LATEST REVISION.

CONTRACTOR IS RESPONSIBLE FOR COORDINATION WITH OWNER'S DESIGNATED INSPECTOR FOR SCHEDULING OF ALL SPECIAL INSPECTIONS. CONTRACTOR SHALL NOTIFY INSPECTOR MINIMUM 24 HOURS PRIOR TO NEED OF INSPECTION.

THE OWNER RESERVES THE RIGHT TO BACK CHARGE THE CONTRACTOR FOR ANY COSTS ASSOCIATED WITH ADDITIONAL SPECIAL INSPECTIONS REQUIRED DUE TO CANCELLATION OF SCHEDULED INSPECTIONS AND RE-INSPECTION OF PREVIOUSLY FAILED INSPECTIONS.

SPECIAL INSPECTIONS REQUIRED INCLUDE BUT ARE NOT LIMITED TO:

SOILS:
1. CONTINUOUS INSPECTION OF
   - 1.1. PROPER MATERIALS
   - 1.2. DENSITIES
   - 1.3. LIFT THICKNESSES DURING PLACEMENT
   - 1.4. COMPACTION OF CONTROLLED FILL
2. PERIODIC INSPECTION OF
   - 2.1. MATERIALS BELOW FOOTINGS ADEQUATE TO ACHIEVE THE DESIGN BEARING CAPACITY
   - 2.2. EXCAVATIONS ARE EXTENDED TO PROPER DEPTH AND HAVE REACHED PROPER MATERIAL
   - 2.3. CLASSIFICATION AND TESTING OF CONTROLLED FILL MATERIALS
   - 2.4. SUBGRADE PRIOR TO PLACEMENT OF COMPACTED FILL
3. THE APPROVED SOILS REPORT, IF ANY EXISTS, SHALL BE USED TO DETERMINE COMPLIANCE.

MHE ENGINEERING
33 Airport Center Drive, Suite 202
New Windsor, NY 12553
(845) 567-3100
111 Wheatfield Drive, Suite 1
Milford, PA 18337
(570) 296-2765

BID SET

HAZARDOUS MATERIAL NOTE:
THE SERVICES PROVIDED BY MHE, INCLUDING ALL WORK DEPICTED ON MHE PLANS, DO NOT INCLUDE SERVICES RELATED TO THE IDENTIFICATION, CONTROLS OR HANDLING OF HAZARDOUS MATERIALS, INCLUDING SUCH MATERIALS AS ASBESTOS AND LEAD PAINT. ALL TESTING, IDENTIFICATION, ABATEMENT, CONTROLS, AND HANDLING OF HAZARDOUS MATERIALS SHALL BE UNDERTAKEN BY A HAZARDOUS MATERIAL CONSULTANT AND CERTIFIED PROFESSIONALS. IF SUCH MATERIALS HAVE BEEN IDENTIFIED, CONTRACTOR WILL COMMUNICATE DIRECTLY WITH HAZARDOUS MATERIAL PROFESSIONAL FOR THE PERFORMANCE OF ANY WORK ON OR ADJACENT TO SAID MATERIALS. IF UNIDENTIFIED MATERIALS OF CONCERN ARE ENCOUNTERED WHILE UNDERTAKING THE WORK SHOWN HEREON, CONTRACTOR SHALL IMMEDIATELY NOTIFY ENGINEER AND OWNER, AND SHALL OBTAIN DIRECTION FROM THE HAZARDOUS MATERIAL CONSULTANT PRIOR TO THE CONTINUATION OF WORK INVOLVING SUSPECTED MATERIAL.

UDIG·NY SAFE DIGGING STARTS HERE
CALL 811

UNAUTHORIZED ADDITION OR ALTERATION OF THIS PLAN IS A VIOLATION OF SECTION 7209(2) OF THE NEW YORK STATE EDUCATION LAW.

ALL PRODUCTION & INTELLECTUAL PROPERTY RIGHT RESERVED ©

CAESARS LANE WWTP EXPANSION PROJECT: PHASE 1
145 CAESARS LN.
NEW WINDSOR, NY 12553
FOR TOWN OF NEW WINDSOR
555 UNION AVE.
NEW WINDSOR, NY 12553

CONTROL BUILDING RETAINING WALL (WALL #1) NOTES

REVISIONS

NO.	DESCRIPTION	DATE

ISSUED DATE:	12 NOV, 2024
DESIGN BY:	JSS
DRAWN BY:	PJW
CHECKED BY:	JSS, JZ
REVIEWED BY:	JSS

SHEET NO.

S-100

PROJECT # 18-732 PHASE # 1

F:\2018\18-732 Caesar Lane WWTP Improvements\Expansion Phase\Drafting\1 - Site Work & Outfall\Structural\Site Work Retaining Walls - Structural.dwg, S-100, 11/13/2024 8:14:44 AM

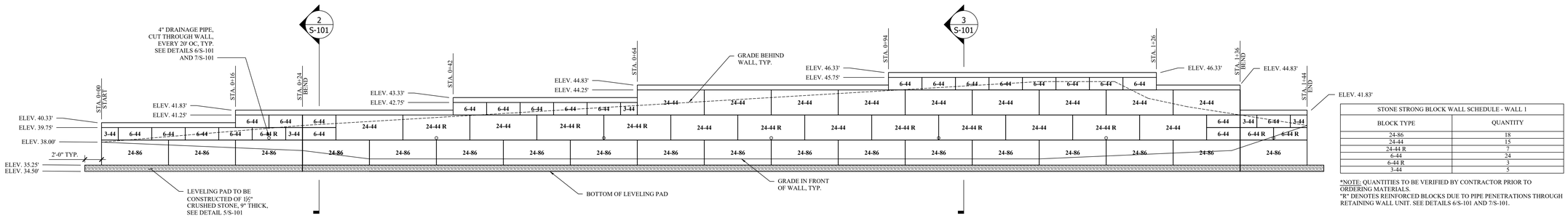

STONE STRONG BLOCK WALL SCHEDULE - WALL 1	
BLOCK TYPE	QUANTITY
24-86	18
24-44	15
24-44 R	7
6-44	24
6-44 R	3
3-44	5

*NOTE: QUANTITIES TO BE VERIFIED BY CONTRACTOR PRIOR TO ORDERING MATERIALS.
"R" DENOTES REINFORCED BLOCKS DUE TO PIPE PENETRATIONS THROUGH RETAINING WALL UNIT. SEE DETAILS 6/S-101 AND 7/S-101.

1 S-101 WALL #1 ELEVATION
SCALE: 3/16" = 1'-0"

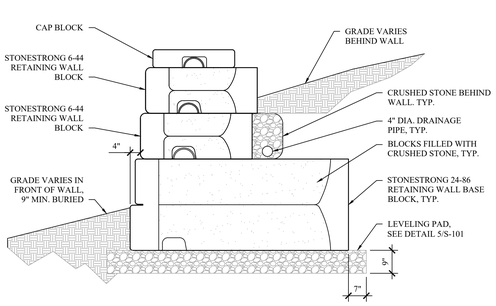

2 S-101 WALL SECTION #1 (STATION 0+26)
SCALE: 1/2" = 1'-0"

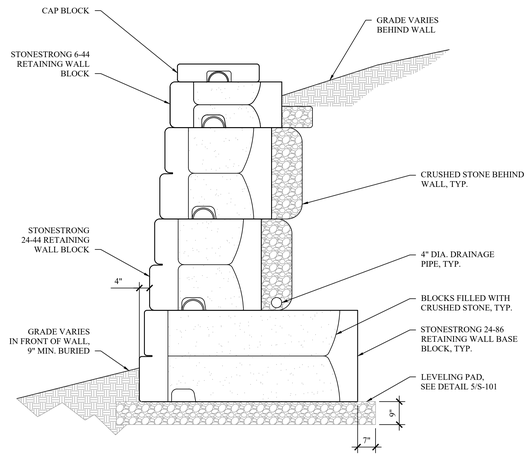

3 S-101 WALL SECTION #2 (STATION 1+03)
SCALE: 1/2" = 1'-0"

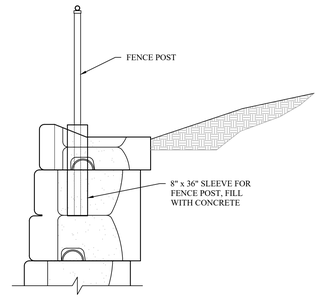

4 S-101 TYPICAL FENCE POST DETAIL
SCALE: 1/2" = 1'-0"

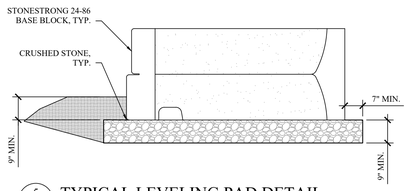

5 S-101 TYPICAL LEVELING PAD DETAIL
SCALE: 1/2" = 1'-0"

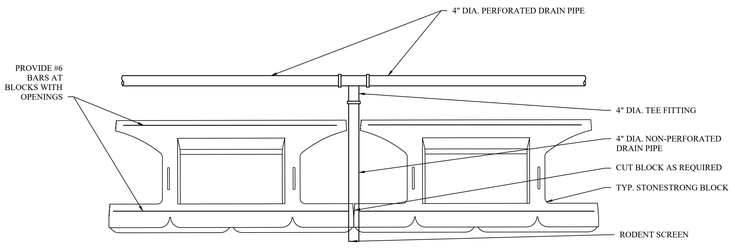

6 S-101 TYPICAL DRAINAGE DETAIL (PLAN VIEW)
SCALE: 1/2" = 1'-0"

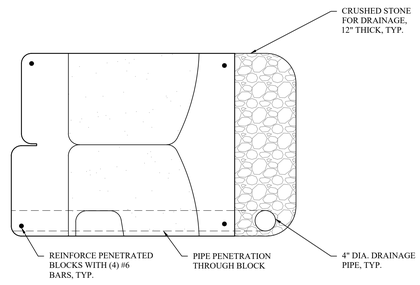

7 S-101 TYPICAL DRAINAGE DETAIL (ELEVATION VIEW)
SCALE: 1" = 1'-0"

MHE ENGINEERING
33 Airport Center Drive, Suite 202
New Windsor, NY 12553
(845) 567-3100
111 Wheatfield Drive, Suite 1
Milford, PA 18337
(570) 296-2765

BID SET

HAZARDOUS MATERIAL NOTE:
THE SERVICES PROVIDED BY MHE, INCLUDING ALL WORK DEPICTED ON MHE PLANS, DO NOT INCLUDE SERVICES RELATED TO THE IDENTIFICATION, CONTROLS OR HANDLING OF HAZARDOUS MATERIALS, INCLUDING SUCH MATERIALS AS ASBESTOS AND LEAD PAINT. ALL TESTING, IDENTIFICATION, ABATEMENT, CONTROLS, AND HANDLING OF HAZARDOUS MATERIALS SHALL BE UNDERTAKEN BY A HAZARDOUS MATERIAL CONSULTANT AND CERTIFIED PROFESSIONALS. IF SUCH MATERIALS HAVE BEEN IDENTIFIED, CONTRACTOR WILL COMMUNICATE DIRECTLY WITH HAZARDOUS MATERIAL PROFESSIONAL FOR THE PERFORMANCE OF ANY WORK ON OR ADJACENT TO SAID MATERIALS. IF UNIDENTIFIED MATERIALS OF CONCERN ARE ENCOUNTERED WHILE UNDERTAKING THE WORK SHOWN HEREON, CONTRACTOR SHALL IMMEDIATELY NOTIFY ENGINEER AND OWNER, AND SHALL OBTAIN DIRECTION FROM THE HAZARDOUS MATERIAL CONSULTANT PRIOR TO THE CONTINUATION OF WORK INVOLVING SUSPECTED MATERIAL.

UDIG·NY SAFE DIGGING STARTS HERE
CALL 811

UNAUTHORIZED ADDITION OR ALTERATION OF THIS PLAN IS A VIOLATION OF SECTION 7209(2) OF THE NEW YORK STATE EDUCATION LAW.

ALL PRODUCTION & INTELLECTUAL PROPERTY RIGHT RESERVED ©

CAESARS LANE WWTP EXPANSION PROJECT: PHASE 1
145 CAESARS LN.
NEW WINDSOR, NY 12553
FOR TOWN OF NEW WINDSOR
555 UNION AVE.
NEW WINDSOR, NY 12553

CONTROL BUILDING RETAINING WALL (WALL #1) ELEVATIONS, SECTIONS, AND DETAILS

REVISIONS

NO.	DESCRIPTION	DATE

ISSUED DATE:	12 NOV, 2024
DESIGN BY:	JSS
DRAWN BY:	PJW
CHECKED BY:	JSS, JZ
REVIEWED BY:	JSS

SHEET NO.

S-101

PROJECT # 18-732 PHASE # 1

T:\2018\18-732 Caesar Lane WWTP Improvements\Expansion Phase\Drafting\1 - Site Work & Outfall\Structural\Site Work Retaining Walls - Structural.dwg, S-101, 11/13/2024 8:14:45 AM

GENERAL NOTES: (STRUCTURAL)

1. THE CONTRACTOR SHALL BE RESPONSIBLE FOR ANY DAMAGE CAUSED BY THE CONTRACTOR OR HIS AGENTS TO STRUCTURES OR SURROUNDING AREAS. DAMAGE WILL BE REPAIRED OR REPLACED AS DIRECTED BY THE ENGINEER AT NO ADDITIONAL COST TO THE OWNER.
2. EXCAVATION SUPPORT, IF REQUIRED, IS THE RESPONSIBILITY OF THE CONTRACTOR, INCLUDING THE STABILITY OF THE EXCAVATION AND ITS INFLUENCE ON ADJACENT PROPERTIES AND STRUCTURES. EXCAVATION SUPPORT MAY ALSO BE UTILIZED TO MINIMIZE EXCAVATION LIMITS. THE CONTRACTOR SHALL SUBMIT SIGNED AND SEALED CALCULATIONS BY A NEW YORK STATE LICENSED PROFESSIONAL ENGINEER TO THE ENGINEER OF RECORD PRIOR TO INSTALLATION OF EXCAVATION SUPPORT MEASURES.
3. ALL ITEMS NOT INDICATED TO BE EXISTING [OR SUPPLIED BY OTHERS] SHALL BE PROVIDED AND INSTALLED UNDER THE REQUIREMENTS OF THIS CONTRACT.
4. THE STRUCTURAL DRAWINGS SHALL BE USED IN CONJUNCTION WITH THE CIVIL, ARCHITECTURAL, PROCESS, MECHANICAL AND ELECTRICAL DRAWINGS. THE CONTRACTOR SHALL VERIFY THE REQUIREMENTS OF OTHER TRADES REGARDING SLEEVES, CHASES, HANGERS, INSERTS, ANCHORS, HOLES, AND ADDITIONAL ITEMS TO BE PLACED OR SET IN STRUCTURAL WORK.
5. THE CONTRACTOR SHALL FIELD VERIFY ALL EXISTING DIMENSIONS AND CONDITIONS PRIOR TO BEGINNING CONSTRUCTION. ANY DISCREPANCIES BETWEEN FIELD CONDITIONS AND THE CONTRACT DRAWINGS SHALL BE BROUGHT TO THE ATTENTION OF THE ENGINEER.
6. ANY ITEMS INDICATED TO BE REPLACED-IN-KIND SHALL BE INSTALLED TO MATCH EXISTING LOCATIONS, CONFIGURATIONS, AND ELEVATIONS UNLESS OTHERWISE NOTED.
7. ALL MATERIALS SHALL BE INSTALLED IN ACCORDANCE WITH MANUFACTURER'S SPECIFICATIONS. IF MANUFACTURER'S SPECIFICATIONS CONFLICT WITH CONTRACT DRAWINGS OR SPECIFICATIONS, THE ENGINEER SHALL BE NOTIFIED IMMEDIATELY.
8. THE CONTRACTOR SHALL PROVIDE TEMPORARY SHORING AND BRACING REQUIRED TO ERECT AND HOLD THE STRUCTURE IN PROPER ALIGNMENT. NEITHER THE STRUCTURE NOR INDIVIDUAL STRUCTURAL ELEMENTS SUCH AS WALLS, BEAMS, JOISTS, AND COLUMNS WILL BE LATERALLY STABLE UNTIL ALL WORK INDICATED ON THE STRUCTURAL DRAWINGS IS COMPLETE.
9. ALL SUBSURFACE UTILITIES SHALL BE IDENTIFIED PRIOR TO EXCAVATION. THE CONTRACTOR SHALL EXERCISE EXTREME CAUTION DURING EXCAVATION. IF UNIDENTIFIED UTILITIES ARE ENCOUNTERED, THE ENGINEER SHALL BE NOTIFIED IMMEDIATELY.
10. ALL ITEMS SHOWN TO BE REMOVED SHALL BE PROPERLY REMOVED, AND PROPERLY DISPOSED OF OFF SITE.
11. NO BACKFILLING OF THE STRUCTURE SHALL OCCUR UNTIL CONCRETE BREAKS SATISFACTORY TO THE ENGINEER ARE OBTAINED.
12. ELEVATIONS SHOWN ARE BASED ON ORIGINAL BLUEPRINTS BY HERBERT L. KARTIGANER, P.E., L.S. DATED JUNE 1967.

SPECIAL INSPECTIONS:

ALL SPECIAL INSPECTIONS LISTED ARE IN ADDITION TO ALL INSPECTION REQUIRED BY STATE AND LOCAL BUILDING CODES. ALL SPECIAL INSPECTIONS SHALL BE PERFORMED BY AN AGENCY RETAINED AND PAID BY THE OWNER OR OWNER'S REPRESENTATIVE. THE APPROVED AGENCY SHALL PROVIDE ALL INFORMATION AS NECESSARY FOR THE BUILDING OFFICIAL TO DETERMINE THAT THE AGENCY MEETS THE APPLICABLE REQUIREMENTS. COPIES OF NECESSARY TEST AND INSPECTION RECORDS SHALL BE FILED WITH THE BUILDING OFFICIAL AND REGISTERED DESIGN PROFESSIONAL. ALL SPECIAL INSPECTIONS AND REPORTS SHALL BE IN ACCORDANCE WITH CHAPTER 17 OF THE 2020 NEW YORK STATE BUILDING CODE LATEST REVISION.

CONTRACTOR IS RESPONSIBLE FOR COORDINATION WITH OWNER'S DESIGNATED INSPECTOR FOR SCHEDULING OF ALL SPECIAL INSPECTIONS. CONTRACTOR SHALL NOTIFY INSPECTOR MINIMUM 48 HOURS PRIOR TO NEED OF INSPECTION.

THE OWNER RESERVES THE RIGHT TO BACK CHARGE THE CONTRACTOR FOR ANY COSTS ASSOCIATED WITH ADDITIONAL SPECIAL INSPECTIONS REQUIRED DUE TO CANCELLATION OF SCHEDULED INSPECTIONS AND RE-INSPECTION OF PREVIOUSLY FAILED INSPECTIONS.

SPECIAL INSPECTIONS REQUIRED INCLUDE BUT ARE NOT LIMITED TO:

STEEL:

1. STRUCTURAL STEEL:
   - 1.1. SPECIAL INSPECTIONS AND NONDESTRUCTIVE TESTING OF STRUCTURAL STEEL ELEMENTS IN BUILDINGS, STRUCTURES AND PORTIONS THEREOF SHALL BE IN ACCORDANCE WITH THE QUALITY ASSURANCE INSPECTION REQUIREMENTS OF AISC 360-16.
2. COLD-FORMED STEEL DECK:
   - 2.1. SPECIAL INSPECTIONS AND QUALIFICATION OF WELDING SPECIAL INSPECTORS FOR COLD-FORMED STEEL FLOOR AND ROOF DECK SHALL BE IN ACCORDANCE WITH THE QUALITY ASSURANCE INSPECTION REQUIREMENTS OF SDI QA/QC.
3. INSTALLATION OF OPEN-WEB STEEL JOISTS AND JOIST GIRDERS:
   - 3.1. PERIODIC SPECIAL INSPECTION OF END CONNECTIONS - WELDED OR BOLTED.
   - 3.2. PERIODIC SPECIAL INSPECTION OF BRIDGING - HORIZONTAL OR DIAGONAL

CONCRETE:

1. PERIODIC INSPECTION OF REINFORCING STEEL.
2. PERIODIC INSPECTION OF ANCHORS CAST IN CONCRETE.
3. INSPECTION OF ANCHORS POST-INSTALLED IN HARDENED CONCRETE.
   - 3.1. CONTINUOUS INSPECTION OF ADHESIVE ANCHORS INSTALLED IN HORIZONTALLY OR UPWARDLY INCLINED ORIENTATIONS TO RESIST SUSTAINED TENSION LOADS.
   - 3.2. PERIODIC INSPECTION OF MECHANICAL ANCHORS AND ADHESIVE ANCHORS NO DEFINED IN 3.1.
4. PERIODIC VERIFICATION OF DESIGN MIX.
5. PRIOR TO CONCRETE PLACEMENT, FABRICATE SPECIMENS FOR STRENGTH TESTS, PERFORM SLUMP, AIR, AND TEMPERATURE TESTS, CONTINUOUS.
6. CONTINUOUS INSPECTION OF PLACEMENT & FOR PROPER APPLICATION TECHNIQUES.
7. PERIODIC INSPECTION FOR MAINTENANCE OF SPECIFIED CURING TEMPERATURE AND TECHNIQUES.
8. PERIODIC VERIFICATION OF IN-SITU CONCRETE STRENGTH, PRIOR TO STRESSING OF TENDONS IN POST-TENSIONED CONCRETE AND PRIOR TO REMOVAL OF SHORES AND FORMS FROM BEAMS AND STRUCTURAL SLABS.
9. PERIODIC INSPECTION OF FORMWORK FOR SHAPE, LOCATION AND DIMENSIONS, OF THE CONCRETE MEMBER BEING FORMED.

MASONRY:

1. SPECIAL INSPECTIONS AND TESTS OF MASONRY CONSTRUCTION SHALL BE PERFORMED IN ACCORDANCE WITH THE QUALITY ASSURANCE PROGRAM REQUIREMENTS OF TMS 402 AND TMS 602.

SOILS:

1. CONTINUOUS INSPECTION OF
   - 1.1. PROPER MATERIALS
   - 1.2. DENSITIES
   - 1.3. LIFT THICKNESSES DURING PLACEMENT
   - 1.4. COMPACTION OF CONTROLLED FILL
2. PERIODIC INSPECTION OF
   - 2.1. MATERIALS BELOW FOOTINGS ADEQUATE TO ACHIEVE THE DESIGN BEARING CAPACITY
   - 2.2. EXCAVATIONS ARE EXTENDED TO PROPER DEPTH AND HAVE REACHED PROPER MATERIAL
   - 2.3. CLASSIFICATION AND TESTING OF CONTROLLED FILL MATERIALS
   - 2.4. SUBGRADE PRIOR TO PLACEMENT OF COMPACTED FILL
3. THE APPROVED SOILS REPORT, IF ANY EXISTS, SHALL BE USED TO DETERMINE COMPLIANCE.

CONCRETE NOTES:

1. CONCRETE SHALL CONFORM TO ACI 211.1, ACI 301, ACI 304R (WHEN PUMPING), AND ACI 318-14. AGGREGATE SHALL CONFORM TO ASTM C33. COMPRESSIVE STRENGTH, RANGE OF SLUMP, WATER-TO-CEMENT RATIO, AND AIR ENTRAINMENT SHALL BE PER THE CONCRETE CLASS SPECIFIED HEREIN AND IN ACCORDANCE WITH CAST-IN-PLACE CONCRETE SPECIFICATION 033000. SUBMIT COPIES OF TEST REPORTS SHOWING THAT THE MIX HAS BEEN SUCCESSFULLY TESTED TO PRODUCE CONCRETE WITH THE PROPERTIES SPECIFIED. TEST REPORTS SHALL BE SUBMITTED TO THE ENGINEER FOR APPROVAL PRIOR TO CONCRETE PLACEMENT.
   - 1.1. CONCRETE CLASSIFICATIONS PER SPECIFICATION SECTION 033000:
     - 1.1.1. FOOTINGS BELOW GRADE: CLASS A
     - 1.1.2. INTERIOR SLABS-ON-GROUND: CLASS C
     - 1.1.3. INTERIOR SUSPENDED SLABS: CLASS E
     - 1.1.4. CAST-IN-PLACE CONCRETE RETAINING WALL: CLASS B
   - 1.2. CONCRETE FINISHER SPECIFICATION SECTION 033000:
     - 1.2.1. FOUNDATIONS BELOW GRADE: AS-CAST SF-2.0 FINISH
     - 1.2.2. INTERIOR SLABS: TROWEL FINISH
     - 1.2.3. CAST-IN-PLACE CONCRETE RETAINING WALL: AS-CAST SF-2.0 FINISH
2. CEMENT SHALL CONFORM TO ASTM C150, TYPE I/II AND SHALL HAVE A CURING PERIOD OF NOT LESS THAN 7 DAYS.
3. CONCRETE SHALL BE WET CURED, USING BURLAP OR COTTON CURING MATS, OR CURED USING ASTM D4397 POLYETHYLENE SHEETING IN ACCORDANCE WITH ASTM C171. WET THE ENTIRE EXPOSED SURFACE OF THE CONCRETE THOROUGHLY WITH A FINE SPRAY OF WATER AND COVER WITH SHEETING THROUGHOUT THE CURING PERIOD. LAY SHEETING DIRECTLY ON CONCRETE SURFACE. PROVIDE SHEETING NOT LESS THAN 18 INCHES WIDER THAN CONCRETE SURFACE. OVERLAP EDGES 12 INCHES AND CONTINUOUSLY TAPE JOINTS.
4. PUMPING SHALL NOT RESULT IN SEPARATION OR LOSS OF MATERIALS NOR CAUSE INTERRUPTIONS SUFFICIENT TO PERMIT LOSS OF PLASTICITY BETWEEN SUCCESSIVE INCREMENTS. LOSS OF SLUMP IN PUMPING EQUIPMENT SHALL NOT EXCEED 2 INCHES. CONCRETE SHALL NOT BE CONVEYED THROUGH PIPE MADE OF ALUMINUM OR ALUMINUM ALLOY. RAPID CHANGES IN PIPE SIZES SHALL BE AVOIDED. MAXIMUM SIZE OF COURSE AGGREGATE SHALL BE LIMITED TO 33 PERCENT OF THE DIAMETER OF THE PIPE. MAXIMUM SIZE OF WELL ROUNDED AGGREGATE SHALL BE LIMITED TO 40 PERCENT OF THE PIPE DIAMETER. SAMPLES FOR TESTING SHALL BE TAKEN AT BOTH THE POINT OF DELIVERY TO THE PUMP AND AT THE DISCHARGE END.
5. CONCRETE SHALL NOT BE PLACED WHEN WEATHER CONDITIONS PREVENT PROPER PLACEMENT AND CONSOLIDATION INCLUDING PERIODS OF PRECIPITATION. TRANSPORT CONCRETE AS RAPIDLY AS PRACTICABLE TAKING PRECAUTION TO PREVENT SEGREGATION OR LOSS OF INGREDIENTS. PUMPING IN ACCORDANCE WITH ACI 304 SHALL BE PERMITTED. DO NOT EXCEED A FREE VERTICAL DROP OF 3 FEET FROM THE POINT OF DISCHARGE. PLACE CONCRETE IN ONE CONTINUOUS OPERATIONS FROM ONE SIDE OF SLAB TO THE OTHER. POSITION GRADE STAKES AT 12 FEET ON CENTER MAXIMUM IN EACH DIRECTION.
6. REINFORCING BARS SHALL CONFORM TO ASTM A615 AND SHALL HAVE A MINIMUM YIELD STRENGTH OF 60 KSI. WELDED WIRE FABRIC REINFORCEMENT SHALL CONFORM TO ASTM A1064. REINFORCEMENT SHALL NOT CONTAIN RUST, SCALE, OIL, GREASE, CLAY, OR FOREIGN SUBSTANCES THAT WOULD REDUCE THE CONCRETE BONDING STRENGTH. REMOVE LOOSE RUST PRIOR TO PLACEMENT OF REINFORCEMENT.
7. REINFORCEMENT SPLICES SHALL BE KEPT TO A PRACTICAL MINIMUM. SEE THE LAP SPLICE TABLE ON THIS SHEET FOR MINIMUM LAP SPLICE LENGTHS.
8. PROVIDE MINIMUM 2" OF CONCRETE COVER FOR ALL REINFORCING STEEL UNLESS OTHERWISE INDICATED.
9. CONCRETE FOOTINGS AND MAT FOUNDATIONS SHALL BE PLACED MONOLITHICALLY WITH THE EXCEPTION THAT VERTICAL CONSTRUCTION JOINTS WILL BE ALLOWED IF EPOXY BONDING COMPOUND IS APPLIED TO THE ROUGHENED SURFACE OF THE HARDENED CONCRETE.
10. INTERIOR SLABS: THE CONTRACTOR SHALL PROVIDE CONTRACTION JOINTS AS INDICATED. JOINTS MAY BE SAWCUT OR CUT WITH A JOINTING TOOL. SAWED JOINTS SHALL BE COMPLETED WITHIN 4 TO 12 HOURS AFTER PLACEMENT OF CONCRETE. JOINTS SHALL INTERSECT WITH THE CORNERS OF ISOLATION JOINT AT COLUMN LOCATIONS, IF ANY ARE PRESENT, AND BE SPACED A MAXIMUM OF 15 FEET ON CENTER, UNLESS NOTED OTHERWISE.
11. REINFORCEMENT SUPPORTS SHALL BE CONCRETE OR OTHER NON-CORRODIBLE MATERIAL HAVING A COMPRESSIVE STRENGTH EQUAL TO OR GREATER THAN THE COMPRESSIVE STRENGTH OF THE CONCRETE BEING PLACED.
12. PROVIDE A ½" ROUNDED EDGE ON ALL EXPOSED EXTERIOR SLAB EDGES. PROVIDE A ½" CHAMFER ON ALL OTHER EXPOSED CONCRETE CORNERS.
13. EPOXY BONDING COMPOUND SHALL BE USED ON ALL CONTACTING SURFACES BETWEEN EXISTING CONCRETE AND NEW CONCRETE. EPOXY BONDING COMPOUND SHALL CONFORM TO ASTM C881, TYPE AND GRADE TO BE IN ACCORDANCE WITH APPROPRIATE USE INDICATED IN SPECIFICATION 033000 CAST-IN-PLACE CONCRETE. DO NOT ALLOW COMPOUND TO HARDEN PRIOR TO CONCRETE PLACEMENT. BONDING AGENT USED SHALL BE NSF 61 APPROVED.
14. PLACE, CONSOLIDATE AND IMMEDIATELY STRIKE OFF CONCRETE TO OBTAIN PROPER CONTOUR GRADE AND ELEVATION BEFORE BLEEDWATER APPEARS. PERMIT CONCRETE TO ATTAIN A SET SUFFICIENT FOR FLOATING AND SUPPORTING THE WEIGHT OF THE FINISHER AND EQUIPMENT. IF BLEEDWATER IS PRESENT PRIOR TO FLOATING THE SURFACE, DRAG THE EXCESS WATER OFF OR REMOVE BY ABSORPTION WITH POROUS MATERIALS. DO NOT USE DRY CEMENT TO ABSORB BLEEDWATER.
15. UNLESS OTHERWISE NOTED, ALL CONCRETE CONSTRUCTION SHALL MEET THE SPECIFIED TOLERANCES OF ACI 117. TOP ELEVATIONS SHALL MATCH THE SPECIFIED ELEVATIONS WITHIN A TOLERANCE OF ±¼"
16. THE REQUIREMENTS OF ACI 302.1R SHALL BE IN EFFECT FOR THE CONSTRUCTION OF ALL FLOORS AND SLABS. THE REQUIREMENTS OF ACI 360.R-10 SHALL BE IN EFFECT FOR THE CONSTRUCTION OF ALL SLABS-ON-GROUND.
17. NO CONCRETE SHALL BE PLACED UNTIL ALL EMBEDDED ITEMS (I.E. PROCESS, ELECTRICAL, MECHANICAL, ETC) HAVE BEEN SET. CONTRACTOR IS RESPONSIBLE FOR COORDINATING ALL TRADES.
18. ALL BAR PLACING AND BENDING SHALL BE IN ACCORDANCE WITH ACI 315.
19. PERFORM COMPRESSIVE TESTS IN ACCORDANCE WITH ASTM C39. OBTAIN ONE COMPOSITE SAMPLE FOR EACH DAY'S POUR OF EACH CONCRETE MIXTURE EXCEEDING 5 CU. YD., BUT LESS THAN 25 CU. YD., PLUS ONE SET FOR EACH ADDITIONAL 50 CU. YD. OR FRACTION THEREOF. TAKE PRECAUTIONS TO PREVENT EVAPORATION AND LOSS OF WATER FROM SPECIMENS. TEST ONE CYLINDER AT 3 DAYS, ONE CYLINDER AT 7 DAYS, AND TWO (THREE FOR 4"x8" CYLINDERS) CYLINDERS AT 28 DAYS AND HOLD ONE IN RESERVE. PERFORM SLUMP TESTS IN ACCORDANCE WITH ASTM C143. PERFORM AIR CONTENT TESTS IN ACCORDANCE WITH ASTM C173 OR ASTM C231. SUBMIT ALL TEST DATA TO THE ENGINEER.
20. CONSOLIDATE CONCRETE WITH HIGH FREQUENCY, INTERNAL, MECHANICAL VIBRATING EQUIPMENT SUPPLEMENTED BY HAND SPADING AND TAMPING. FURNISH A SPARE VIBRATOR ON THE JOB SITE WHENEVER CONCRETE IS PLACED. OPERATE VIBRATORS WITH VIBRATORY ELEMENT SUBMERGED IN THE CONCRETE, WITH A MINIMUM FREQUENCY OF NOT LESS THAN 6000 IMPULSES PER MINUTE WHEN SUBMERGED. INSERT AND WITHDRAW VIBRATORS AT INTERVALS APPROXIMATELY 18 INCHES APART.
21. ELASTOMERIC JOINT SEALANT SHALL CONFORM TO ASTM C920, TYPE S, GRADE P, CLASS 25. JOINT SEALANT IN CONTACT WITH POTABLE WATER SHALL BE NSF 61 APPROVED.
22. FLOWABLE FILL SHALL BE IN ACCORDANCE WITH CONTROLLED DENSITY FILL SPECIFICATION 033110.

STRUCTURAL STEEL NOTES:

1. STRUCTURAL STEEL SYSTEMS INCLUDING MATERIALS, INSTALLATION, WORKMANSHIP, FABRICATION, ASSEMBLY, ERECTION, INSPECTION, QUALITY CONTROL, AND TESTING SHALL BE PROVIDED IN ACCORDANCE WITH AISC MANUAL OF STEEL CONSTRUCTION, LATEST EDITION.
2. ALL STEEL SHALL CONFORM TO THE FOLLOWING UNLESS OTHERWISE NOTED:
   - W SHAPES: ASTM A992, Fy = 50KSI
   - HSS: ASTM A500 GR. C, Fy = 50KSI
   - OTHER STEEL SHAPES: ASTM A36, Fy = 36KSI
3. ALL HOLES IN STEEL SHALL BE STANDARD SIZE 1/16" LARGER THAN BOLT DIAMETER UNLESS OTHERWISE NOTED. ALL HOLES SHALL BE DRILLED OR PUNCHED. BURNING IS NOT ALLOWED. COLUMN ANCHOR BOLT HOLES MAY BE OVERSIZED.
4. COPES SHALL BE PROVIDED WITH 1/2" RADIUS MINIMUM, SMOOTH CORNERS, AND FREE OF NOTCHES. DEPTH AND LENGTH OF COPES SHALL BE AS INDICATED.
5. ALL BOLTS SHALL CONFORM TO ASTM A325, EXCEPT ANCHOR BOLTS SHALL CONFORM TO ASTM F1554. ALL NUTS SHALL CONFORM TO ASTM A563, GRADE AND STYLE FOR APPLICABLE ASTM BOLT STANDARD. ALL WASHERS SHALL CONFORM TO ASTM F436 FOR ASTM A325 BOLTS AND F1554 ANCHOR BOLTS.
6. UNLESS NOTED OTHERWISE ALL STRUCTURAL STEEL MEMBERS SHALL BE HOT DIPPED GALVANIZED IN ACCORDANCE WITH ASTM A123 AND ALL STRUCTURAL STEEL FASTENERS (INCLUDING NUTS, BOLTS, WASHERS, ETC..) SHALL BE HOT DIPPED GALVANIZED IN ACCORDANCE WITH ASTM A153.

STEEL JOISTS NOTES:

1. STEEL JOISTS SHALL BE DESIGNED, FABRICATED, AND INSTALLED IN ACCORDANCE WITH STEEL JOIST INSTITUTE (SJI) "STANDARD SPECIFICATIONS LOAD TABLES AND WEIGHT TABLES FOR STEEL JOISTS AND JOIST GIRDERS" LATEST EDITION.
2. STEEL JOIST FABRICATOR SHALL SUPPLY AN AFFIDAVIT STATING COMPLIANCE WITH ALL APPLICABLE AISC, SJI AND AISI REQUIREMENTS.
3. STEEL JOIST SUPPLIER MUST BE A MEMBER OF SJI.
4. ALL STEEL JOIST SHALL BE BRACED IN ACCORDANCE WITH SJI. JOIST BRIDGING SHALL BE FURNISHED BY THE JOIST MANUFACTURER.

WELDING NOTES:

1. ALL WELDING SHALL BE CONDUCTED BY CERTIFIED WELDERS IN ACCORDANCE WITH AWS D1.1, LATEST EDITION FOR STRUCTURAL STEEL AND AWS D1.3, LATEST EDITION FOR STRUCTURAL SHEET STEEL.
2. THE CONTRACTOR SHALL BEAR FULL RESPONSIBILITY FOR PROTECTING EXISTING EQUIPMENT, MATERIALS, BUILDING STRUCTURES, AND BUILDING COMPONENTS DURING ANY FIELD WELDING OPERATIONS.
3. WELDS OF HEADED STUDS SHALL MATCH STRENGTH OF STUDS.

ROOF DECK NOTES:

1. STEEL FORM DECK SHALL BE FABRICATED AND INSTALLED IN ACCORDANCE WITH STEEL DECK INSTITUTE (SDI) "DESIGN MANUAL FOR FORM DECKS" LATEST EDITION. STEEL FORM DECK SHALL BE PROVIDED WITH A G90 GALVANIZED COATING AND HAVE THE FOLLOWING MINIMUM PROPERTIES:

   POS MOMENT OF INERTIA = 0.155 in4/ft.
   NEG MOMENT OF INERTIA = 0.178 in4/ft.
   GAGE/THICKNESS = 22 ga/ 0.0474 in.
   POSITIVE SECTION MODULUS =0.169 in3/ft
   NEGATIVE SECTION MODULUS = 0.179 in3/ft

2. UNLESS OTHERWISE NOTED, STEEL DECK SHALL BE WELDED TO ALL SUPPORTING STEEL (INCLUDING CONTINUOUS SUPPORTING STEEL AT PERIMETER) AT 1'-0" ON CENTER WITH 5/8"DIAMETER PUDDLE WELDS. DECK UNITS SHALL BE ATTACHED TO ADJACENT UNITS AT SIDELAPS WITH (5) NO.12 STITCH SCREWS PER SPAN EQUALLY SPACED.
3. STEEL DECK SHALL BE VULCRAFT 22 GAGE 1.5B-36, OR EQUAL.

CONCRETE DECK NOTES:

1. STEEL FORM DECK SHALL BE FABRICATED AND INSTALLED IN ACCORDANCE WITH STEEL DECK INSTITUTE (SDI) "DESIGN MANUAL FOR FORM DECKS" LATEST EDITION. STEEL FORM DECK SHALL BE PROVIDED WITH A G90 GALVANIZED COATING AND HAVE THE FOLLOWING MINIMUM PROPERTIES:

   POS MOMENT OF INERTIA = 0.290 in4/ft.
   NEG MOMENT OF INERTIA = 0.277 in4/ft.
   GAGE/THICKNESS = 18 ga/ 0.0474 in.
   POSITIVE SECTION MODULUS =0.318 in3/ft
   NEGATIVE SECTION MODULUS = 0.306 in3/ft

2. UNLESS OTHERWISE NOTED, STEEL DECK SHALL BE WELDED TO ALL SUPPORTING STEEL (INCLUDING CONTINUOUS SUPPORTING STEEL AT PERIMETER) AT 1'-0" ON CENTER WITH 5/8"DIAMETER PUDDLE WELDS. DECK UNITS SHALL BE ATTACHED TO ADJACENT UNITS AT SIDELAPS WITH (5) NO.12 STITCH SCREWS PER SPAN EQUALLY SPACED.
3. CONTRACTOR SHALL PROVIDE AND INSTALL ALL CLOSURE PLATES FOR STEEL DECK PRIOR TO PLACING CONCRETE.
4. STEEL DECK SHALL BE VULCRAFT 18 GAGE 1.5C-36, OR EQUAL. DECK SHALL BE CAPABLE OF SPANNING 6.5 FEET (MIN) WITH THE USE OF NORMAL WEIGHT CONCRETE.

STRUCTURAL DESIGN PROVISIONS:

THE ALTERATIONS TO THE EXISTING STRUCTURE SHOWN HEREON HAS BEEN DESIGNED FOR THE FOLLOWING IN ACCORDANCE WITH THE 2020 NEW YORK STATE EXISTING BUILDING CODE LEVEL 2 ALTERATIONS SECTION 806 AND ASCE 7-16:

INTERIOR FLOOR INFILL LOADING:
FLOOR LIVE LOAD = 100PSF
FLOOR DEAD LOAD = 65PSF

ROOF INFILL LOADING:
ROOF LIVE LOAD = 20PSF (SNOW LOAD GOVERNS)

ROOF SNOW LOAD (S):
GROUND SNOW LOAD (P_g) = 30 PSF
FLAT ROOF SNOW LOAD (P_f) = 22 PSF
SNOW EXPOSURE FACTOR (C_s) = 0.90
SNOW IMPORTANCE FACTOR (I) = 1.10
THERMAL FACTOR (C_t) = 1.0
SLOPE FACTOR (C_s) = 1.0
UNBALANCED SNOW LOAD = N/A
DRIFT SURCHARGE LOAD = N/A
DRIFT WIDTH = N/A

WIND LOAD (W):
BASIC WIND SPEED (V)= 120 MPH
ASD WIND SPEED (V_{asd}) = 93 MPH
BUILDING CATEGORY = RISK CATEGORY III
WIND EXPOSURE = B
WIND DIRECTIONALITY FACTOR = Kd=0.85
TOPOGRAPHIC FACTOR = Kzt=1.0
GUST FACTOR = 0.85
ENCLOSURE CLASSIFICATION = ENCLOSED
APPLICABLE. INTERNAL PRESSURE COEFF. = ±0.18
COMPONENTS & CLADDING PRESSURES:

ROOF WIND PRESSURES (PSF)					
ZONE	< 10 SQ. FT.	< 20 SQ. FT.	< 50 SQ. FT.	< 100 SQ. FT	< 500 SQ. FT.
1	+16/-42	+16/-39	+16/-35	+16/-33	+16/-33
1'	+16/-24	+16/-24	+16/-24	+16/-24	+16/-24
2	+16/-55	+16/-51	+16/-47	+16/-43	+16/-43
3	+16/-75	+16/-68	+16/-58	+16/-51	+16/-51

WALL WIND PRESSURES (PSF)					
ZONE	< 10 SQ. FT.	< 20 SQ. FT.	< 50 SQ. FT.	< 100 SQ. FT	< 500 SQ. FT.
4	+26/-29	+25/-27	+24/-26	+22/-25	+22/-25
5	+16/-35	+25/-33	+24/-30	+22/-27	+22/-27

COMPONENTS AND CLADDING WIND PRESSURE TABLE NOTES:
1. PLUS AND MINUS SIGNS SIGNIFY PRESSURES ACTING TOWARD AND AWAY FROM THE PROJECTED SURFACE, RESPECTIVELY.
2. WIND PRESSURES SHOWN ARE ULTIMATE AND CAN BE CONVERTED TO SERVICE BY BEING MULTIPLIED BY 0.6
3. JOIST NET UPLIFT LOAD COMBINATION IS 0.9D+W.
   - 3.1. "D" = 3PSF
4. WIDTH OF PRESSURE COEFFICIENT ZONE, a = 4.80 FT.

GEOTECHNICAL INFORMATION:
ALLOWABLE SOIL BEARING PRESSURE = 4000 PSF

GEOTECHNICAL NOTES:

1. SELECT FILL SHALL BE UTILIZED FOR BACKFILL OF ALL STRUCTURES (UNLESS OTHERWISE NOTED).
2. THE MINIMUM SELECT FILL PROPERTIES LISTED BELOW WERE RECOMMENDED PER THE GEOTECHNICAL REPORT PREPARED BY TECTONIC ENGINEERING CONSULTANTS, GEOLOGISTS & LAND SURVEYORS, D.P.C. DATED JANUARY 15, 2020:
   - UNIT WEIGHT = 130 PSF
   - FRICTION ANGLE = 35°
   - Ka = 0.27
   - Ko = 0.43
   - Kp = 3.69
3. OVER-EXCAVATED AREAS BENEATH BUILDING FOUNDATIONS OR SLAB-ON-GRADE FLOORS SHALL BE RE-ESTABLISHED WITH COMPACTED SELECT FILL. OVER-EXCAVATED AREAS BENEATH TANK FOUNDATIONS SHALL BE RE-ESTABLISHED WITH FLOWABLE FILL.
4. THE CONTRACTOR SHALL SUBMIT DESIRED BACKFILL MATERIAL SPECIFICATION MEETING ALL DESIGN CRITERIA LISTED ABOVE, AT A MINIMUM, TO THE ENGINEER OF RECORD PRIOR TO USE ON SITE. ALTERNATIVELY, THE CONTRACTOR SHALL ELECT TO PERFORM A FIELD PROCTOR OF THE EXISTING SITE SOILS TO VERIFY THAT EXISTING SOILS MEET THE MINIMUM DESIGN VALUES STATED ABOVE.
5. FOR ADDITIONAL GEOTECHNICAL INFORMATION, SEE THE SITE SPECIFIC GEOTECHNICAL REPORT PREPARED BY TECTONIC PROVIDED IN THE CONTRACT.

MASONRY NOTES:

1. ALL MASONRY CONSTRUCTION SHALL CONFORM TO THE LATEST EDITION OF THE "BUILDING CODE REQUIREMENTS FOR MASONRY STRUCTURES" ACI 530/TMS 402.
2. ALL CONCRETE MASONRY UNITS SHALL BE NORMAL WEIGHT WITH TWO (2) CELLS AND CONFORM TO ASTM C90 UNLESS OTHERWISE SPECIFIED.
3. ALL BRICK MASONRY UNITS SHALL CONFORM TO ASTM C216. REFER TO THE ARCHITECTURAL DRAWINGS FOR SIZE AND COLOR.
4. ALL MORTAR SHALL CONFORM TO ASTM C270.
5. ALL GROUT SHALL CONFORM TO ASTM C476.
6. THE MINIMUM SPECIFIED NET AREA COMPRESSIVE STRENGTH OF MASONRY (f'm) SHALL BE 2000 PSI AND SHALL CONSIST OF THE FOLLOWING COMPONENTS:
   - CONCRETE MASONRY UNITS: 2000 PSI MINIMUM NET AREA COMPRESSIVE STRENGTH
   - BRICK MASONRY UNITS: 4950 PSI MINIMUM NET AREA COMPRESSIVE STRENGTH
   - PORTLAND CEMENT MORTAR: TYPE S
   - GROUT: 2000 PSI MINIMUM 28 DAY COMPRESSIVE STRENGTH (GROUT COMPRESSIVE STRENGTH SHALL NOT BE LESS THAN f'm)
7. GROUT ALL CELLS CONTAINING REINFORCEMENT AND/OR HEADED STUD ANCHORS AS WELL AS DIRECTLY BELOW ALL BEARING PLATES.
8. UNLESS OTHERWISE INDICATED, ALL CMU WALLS SHALL BE PROVIDED WITH HOT DIPPED GALVANIZED HORIZONTAL REINFORCEMENT (DUROWAL W1.7 LADDER WIRE, OR EQUAL) EVERY OTHER COURSE (16" O.C.). PROVIDE HORIZONTAL REINFORCING FOR THE FIRST TWO COURSES ABOVE ALL LINTELS.
9. REINFORCEMENT SHALL BE PLACED SUCH THAT A MINIMUM OF ⅝" MORTAR COVER EXISTS FOR EXTERIOR FACES, AND A MINIMUM OF ½" MORTAR COVER EXISTS FOR ALL INTERIOR FACES.

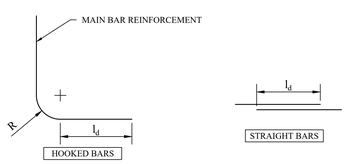

TYPICAL HOOKED REBAR LAP SPLICE LENGTHS PER ACI 318 CHAPTER 25 (ASSUMING 4000 PSI CONCRETE)

MAIN BAR SIZE	R (in)	l_d (C.C. > 2.5")	l_d (C.C. < 2.5")
#4	1.5	7	11
#5	1.875	8	13
#6	2.25	10	16
#7	2.625	12	18
#8	3	13	21
#9	4.75	15	23
#10	5.375	17	26

TYPICAL STRAIGHT REBAR LAP SPLICE LENGTHS PER ACI 318 CHAPTER 25 (ASSUMING 4000 PSI CONCRETE)

MAIN BAR SIZE	l_d (in)
#4	15
#5	19
#6	23
#7	36
#8	47
#9	59
#10	73

REBAR LAP SPLICE TABLES AND REFERENCE DETAIL

MHE ENGINEERING
33 Airport Center Drive, Suite 202
New Windsor, NY 12553
(845) 567-3100
111 Wheatfield Drive, Suite 1
Milford, PA 18337
(570) 296-2765

BID SET

HAZARDOUS MATERIAL NOTE:
THE SERVICES PROVIDED BY MHE, INCLUDING ALL WORK DEPICTED ON MHE PLANS, DO NOT INCLUDE SERVICES RELATED TO THE IDENTIFICATION, CONTROLS OR HANDLING OF HAZARDOUS MATERIALS, INCLUDING SUCH MATERIALS AS ASBESTOS AND LEAD PAINT. ALL TESTING, IDENTIFICATION, ABATEMENT, CONTROLS, AND HANDLING OF HAZARDOUS MATERIALS SHALL BE UNDERTAKEN BY A HAZARDOUS MATERIAL CONSULTANT AND CERTIFIED PROFESSIONALS. IF SUCH MATERIALS HAVE BEEN IDENTIFIED, CONTRACTOR WILL COMMUNICATE

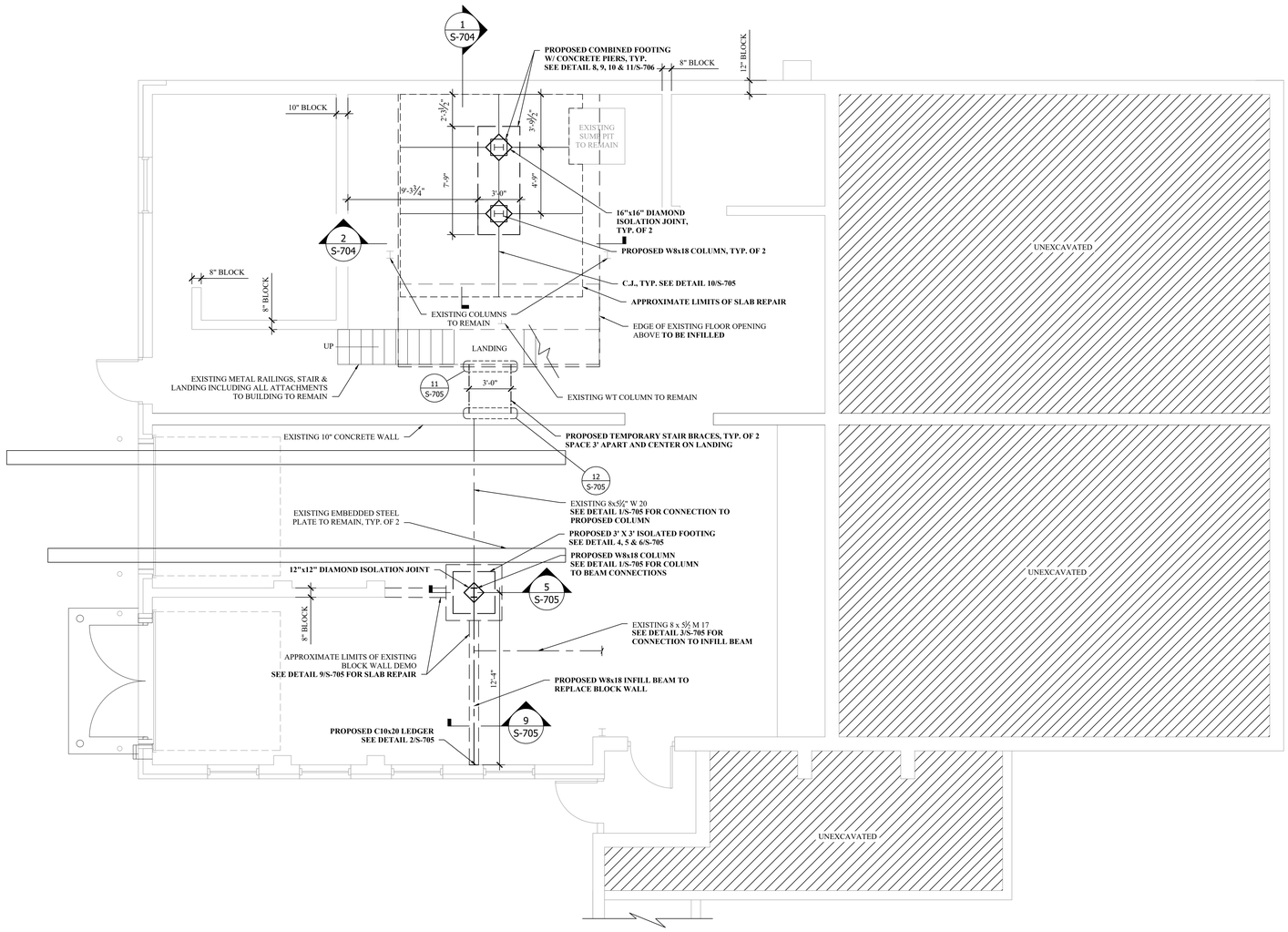

LOWER LEVEL MODIFICATION PLAN

SCALE: ¼" = 1'-0"

MHE ENGINEERING

33 Airport Center Drive, Suite 202
New Windsor, NY 12553
(845) 567-3100

111 Wheatfield Drive, Suite 1
Milford, PA 18337
(570) 296-2765

BID SET

HAZARDOUS MATERIAL NOTE:

THE SERVICES PROVIDED BY MHE, INCLUDING ALL WORK DEPICTED ON MHE PLANS, DO NOT INCLUDE SERVICES RELATED TO THE IDENTIFICATION, CONTROLS OR HANDLING OF HAZARDOUS MATERIALS, INCLUDING SUCH MATERIALS AS ASBESTOS AND LEAD PAINT. ALL TESTING, IDENTIFICATION, ABATEMENT, CONTROLS, AND HANDLING OF HAZARDOUS MATERIALS SHALL BE UNDERTAKEN BY A HAZARDOUS MATERIAL CONSULTANT AND CERTIFIED PROFESSIONALS. IF SUCH MATERIALS HAVE BEEN IDENTIFIED, CONTRACTOR WILL COMMUNICATE DIRECTLY WITH HAZARDOUS MATERIAL PROFESSIONAL FOR THE PERFORMANCE OF ANY WORK ON OR ADJACENT TO SAID MATERIALS. IF UNIDENTIFIED MATERIALS OF CONCERN ARE ENCOUNTERED WHILE UNDERTAKING THE WORK SHOWN HEREON, CONTRACTOR SHALL IMMEDIATELY NOTIFY ENGINEER AND OWNER, AND SHALL OBTAIN DIRECTION FROM THE HAZARDOUS MATERIAL CONSULTANT PRIOR TO THE CONTINUATION OF WORK INVOLVING SUSPECTED MATERIAL.

UDIG·NY SAFE DIGGING STARTS HERE
CALL 811

UNAUTHORIZED ADDITION OR ALTERATION OF THIS PLAN IS A VIOLATION OF SECTION 7209(2) OF THE NEW YORK STATE EDUCATION LAW.

ALL PRODUCTION & INTELLECTUAL PROPERTY RIGHT RESERVED ©

CAESARS LANE WWTP EXPANSION PROJECT: PHASE 1

145 CAESARS LN.
NEW WINDSOR, NY 12553

FOR TOWN OF NEW WINDSOR
555 UNION AVE.
NEW WINDSOR, NY 12553

SLUDGE DEWATERING BUILDING - GROUND LEVEL MODIFICATION PLAN

REVISIONS

NO.	DESCRIPTION	DATE

ISSUED DATE:	21 NOV, 2024
DESIGN BY:	WPG/PJW
DRAWN BY:	WPG/PJW
CHECKED BY:	JSS/PJW
REVIEWED BY:	JSS/MJL

SHEET NO.

S-701

PROJECT # 18-732 PHASE #1

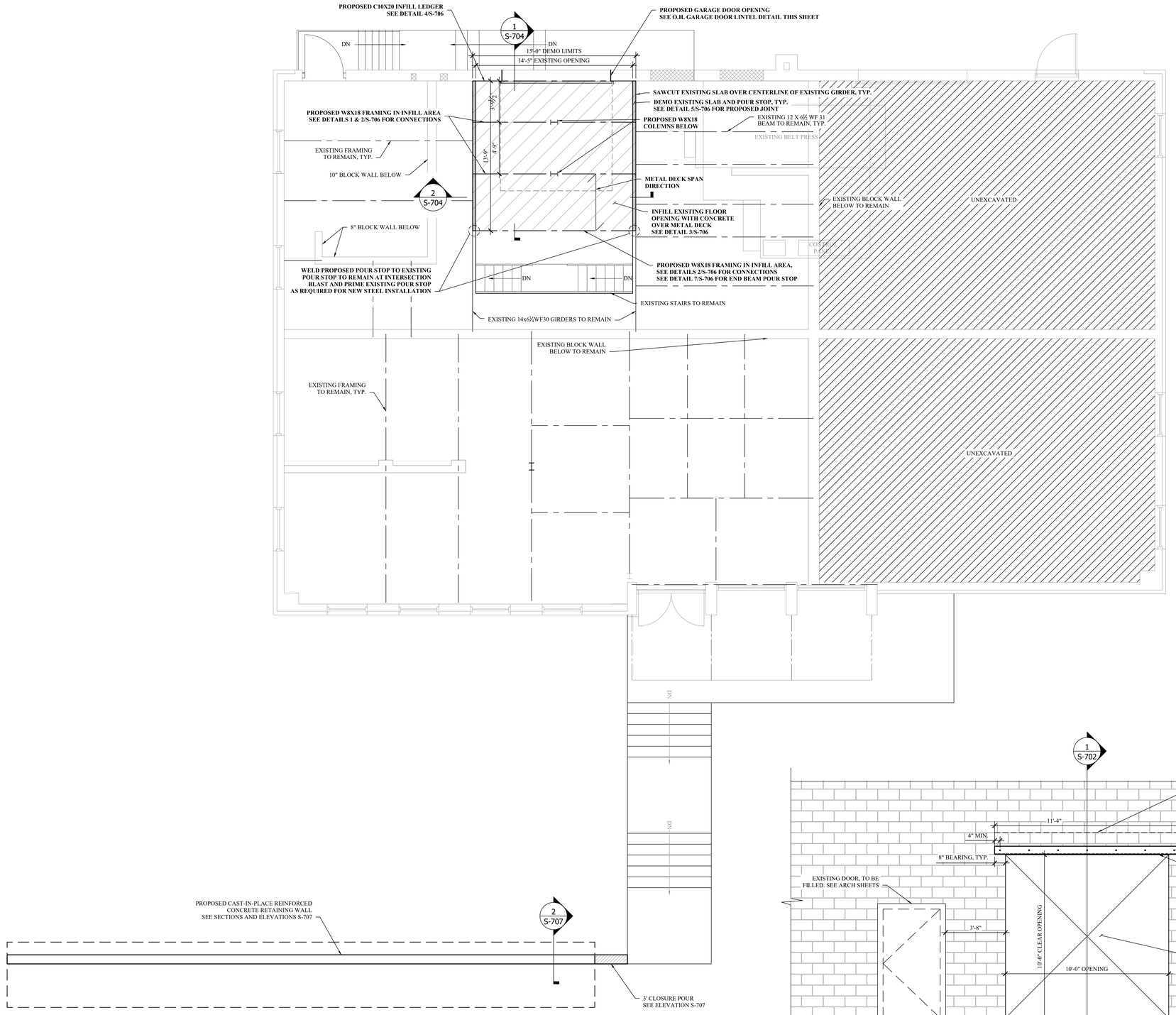

UPPER LEVEL MODIFICATION PLAN

SCALE: ¼" = 1'-0"

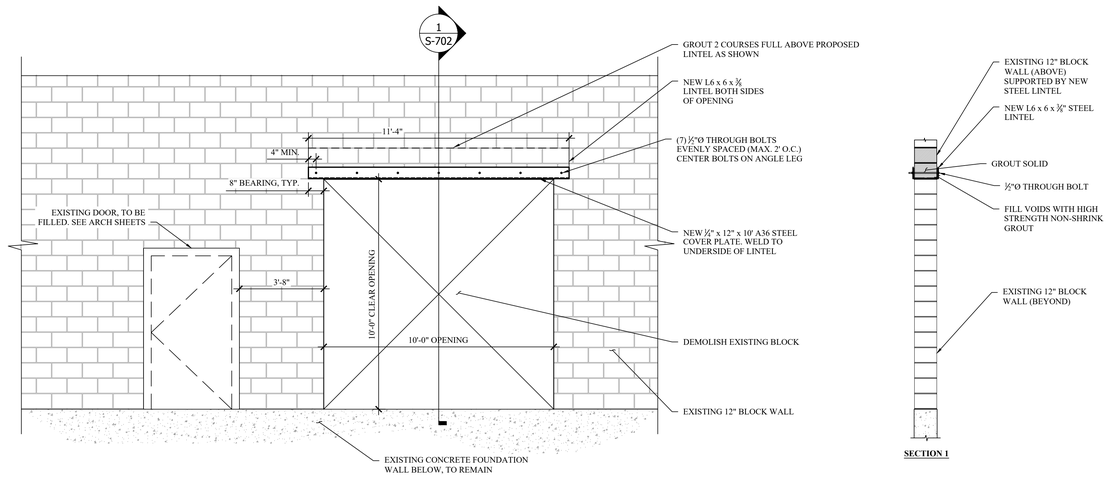

SECTION 1

1/S-702 PROPOSED O.H. GARAGE DOOR LINTEL DETAIL

SCALE: 3/8" = 1'-0"

MHE ENGINEERING

33 Airport Center Drive, Suite 202
New Windsor, NY 12553
(845) 567-3100

111 Wheatfield Drive, Suite 1
Milford, PA 18337
(570) 296-2765

BID SET

HAZARDOUS MATERIAL NOTE:

THE SERVICES PROVIDED BY MHE, INCLUDING ALL WORK DEPICTED ON MHE PLANS, DO NOT INCLUDE SERVICES RELATED TO THE IDENTIFICATION, CONTROLS OR HANDLING OF HAZARDOUS MATERIALS, INCLUDING SUCH MATERIALS AS ASBESTOS AND LEAD PAINT. ALL TESTING, IDENTIFICATION, ABATEMENT, CONTROLS, AND HANDLING OF HAZARDOUS MATERIALS SHALL BE UNDERTAKEN BY A HAZARDOUS MATERIAL CONSULTANT AND CERTIFIED PROFESSIONALS. IF SUCH MATERIALS HAVE BEEN IDENTIFIED, CONTRACTOR WILL COMMUNICATE DIRECTLY WITH HAZARDOUS MATERIAL PROFESSIONAL FOR THE PERFORMANCE OF ANY WORK ON OR ADJACENT TO SAID MATERIALS. IF UNIDENTIFIED MATERIALS OF CONCERN ARE ENCOUNTERED WHILE UNDERTAKING THE WORK SHOWN HEREON, CONTRACTOR SHALL IMMEDIATELY NOTIFY ENGINEER AND OWNER, AND SHALL OBTAIN DIRECTION FROM THE HAZARDOUS MATERIAL CONSULTANT PRIOR TO THE CONTINUATION OF WORK INVOLVING SUSPECTED MATERIAL.

UDIG·NY SAFE DIGGING STARTS HERE
CALL 811

UNAUTHORIZED ADDITION OR ALTERATION OF THIS PLAN IS A VIOLATION OF SECTION 7209(2) OF THE NEW YORK STATE EDUCATION LAW.

ALL PRODUCTION & INTELLECTUAL PROPERTY RIGHT RESERVED ©

CAESARS LANE WWTP
EXPANSION PROJECT:
PHASE 1
145 CAESARS LN.
NEW WINDSOR, NY 12553
FOR TOWN OF NEW WINDSOR
555 UNION AVE.
NEW WINDSOR, NY 12553

SLUDGE DEWATERING BUILDING - UPPER LEVEL MODIFICATION PLAN

REVISIONS

NO.	DESCRIPTION	DATE

ISSUED DATE:	21 NOV, 2024
DESIGN BY:	WPG/PJW
DRAWN BY:	WPG/PJW
CHECKED BY:	JSS/PJW
REVIEWED BY:	JSS/MJL

SHEET NO.

S-702

PROJECT # 18-732 PHASE #1

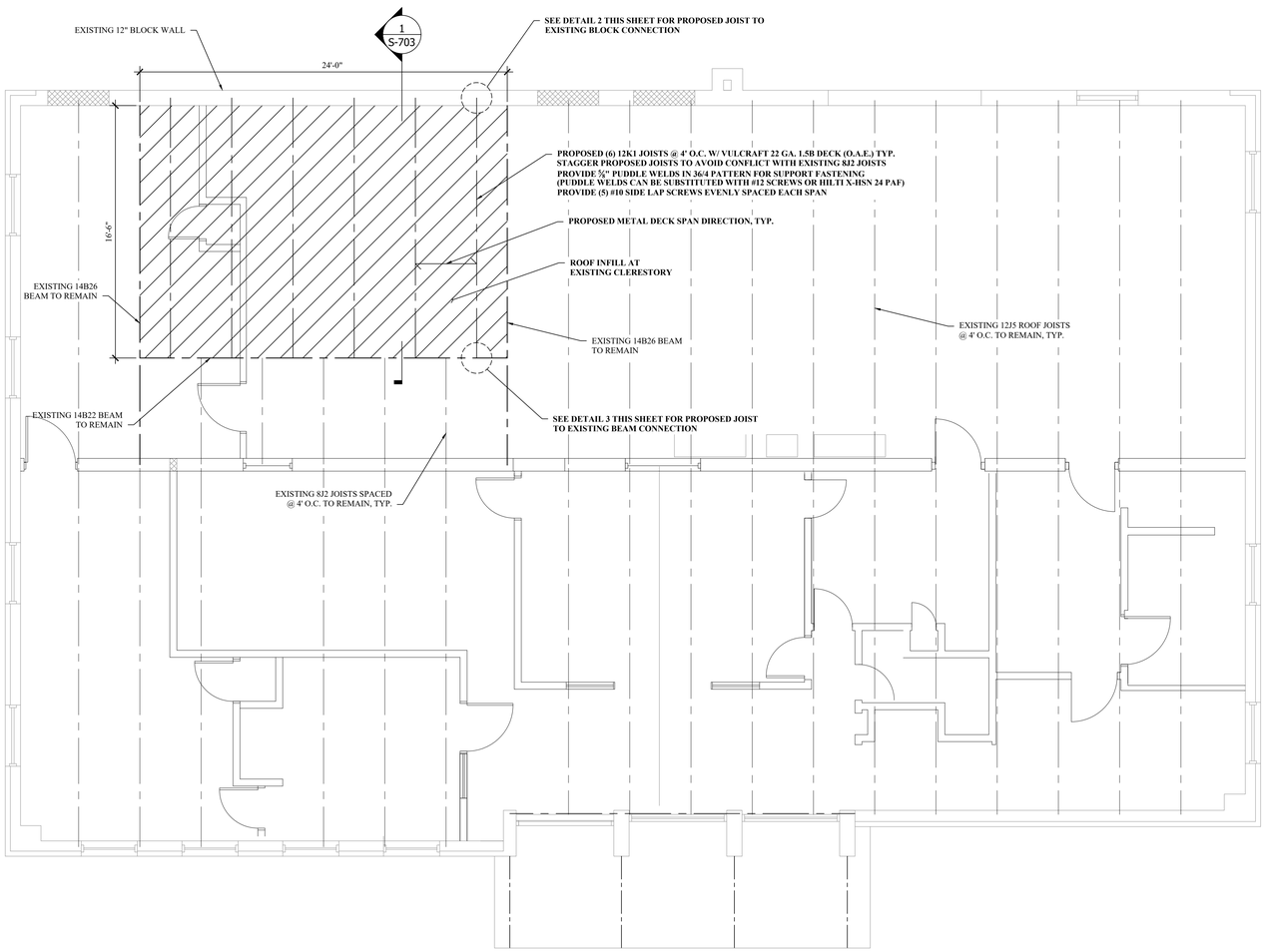

ROOF FRAMING PLAN

SCALE: 1/4" = 1'-0"

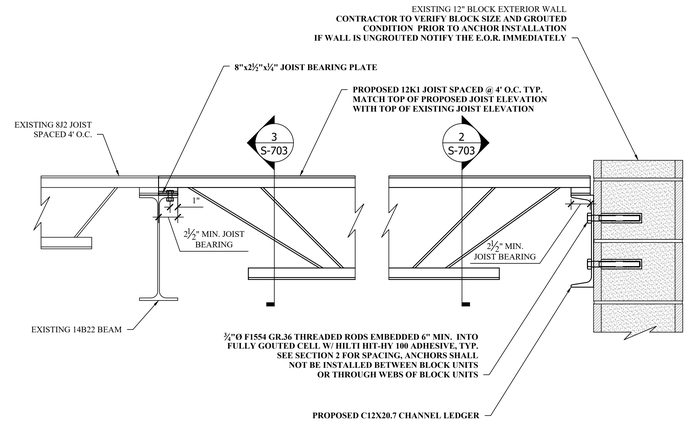

1 S-703 PROPOSED JOIST CONNECTIONS

SCALE: 1-1/2" = 1'-0"

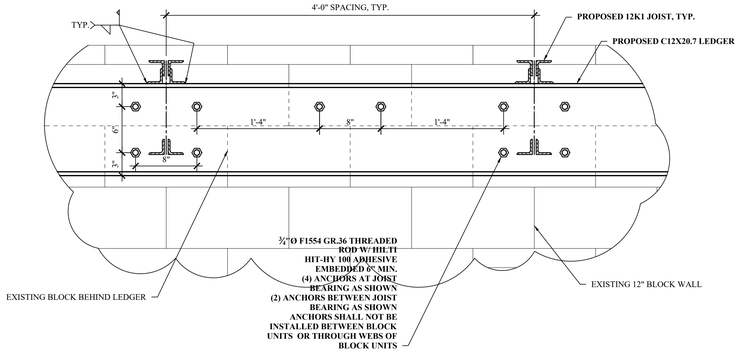

2 S-703 PROPOSED JOIST CONNECTIONS TO EXISTING BLOCK

SCALE: 1-1/2" = 1'-0"

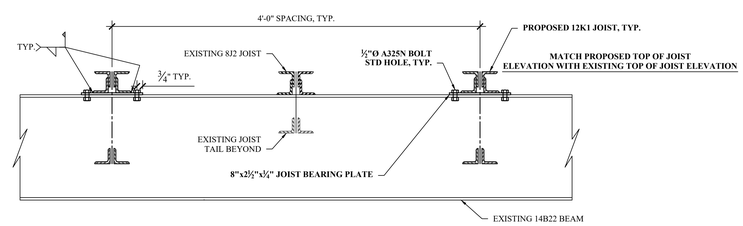

3 S-703 PROPOSED JOIST CONNECTIONS TO EXISTING BEAM

SCALE: 1-1/2" = 1'-0"

MHE ENGINEERING
33 Airport Center Drive, Suite 202
New Windsor, NY 12553
(845) 567-3100
111 Wheatfield Drive, Suite 1
Milford, PA 18337
(570) 296-2765

BID SET

HAZARDOUS MATERIAL NOTE:

THE SERVICES PROVIDED BY MHE, INCLUDING ALL WORK DEPICTED ON MHE PLANS, DO NOT INCLUDE SERVICES RELATED TO THE IDENTIFICATION, CONTROLS OR HANDLING OF HAZARDOUS MATERIALS, INCLUDING SUCH MATERIALS AS ASBESTOS AND LEAD PAINT. ALL TESTING, IDENTIFICATION, ABATEMENT, CONTROLS, AND HANDLING OF HAZARDOUS MATERIALS SHALL BE UNDERTAKEN BY A HAZARDOUS MATERIAL CONSULTANT AND CERTIFIED PROFESSIONALS. IF SUCH MATERIALS HAVE BEEN IDENTIFIED, CONTRACTOR WILL COMMUNICATE DIRECTLY WITH HAZARDOUS MATERIAL PROFESSIONAL FOR THE PERFORMANCE OF ANY WORK ON OR ADJACENT TO SAID MATERIALS. IF UNIDENTIFIED MATERIALS OF CONCERN ARE ENCOUNTERED WHILE UNDERTAKING THE WORK SHOWN HEREON, CONTRACTOR SHALL IMMEDIATELY NOTIFY ENGINEER AND OWNER, AND SHALL OBTAIN DIRECTION FROM THE HAZARDOUS MATERIAL CONSULTANT PRIOR TO THE CONTINUATION OF WORK INVOLVING SUSPECTED MATERIAL.

UDIG·NY SAFE DIGGING STARTS HERE
CALL 811

UNAUTHORIZED ADDITION OR ALTERATION OF THIS PLAN IS A VIOLATION OF SECTION 7209(2) OF THE NEW YORK STATE EDUCATION LAW.

ALL PRODUCTION & INTELLECTUAL PROPERTY RIGHT RESERVED ©

CAESARS LANE WWTP EXPANSION PROJECT: PHASE 1
145 CAESARS LN.
NEW WINDSOR, NY 12553
FOR TOWN OF NEW WINDSOR
555 UNION AVE.
NEW WINDSOR, NY 12553

SLUDGE DEWATERING BUILDING - ROOF MODIFICATION PLAN

REVISIONS

NO.	DESCRIPTION	DATE

ISSUED DATE:	21 NOV, 2024
DESIGN BY:	WPG/PJW
DRAWN BY:	WPG/PJW
CHECKED BY:	JSS/PJW
REVIEWED BY:	JSS/MJL

SHEET NO.

S-703

PROJECT # 18-732 PHASE #1

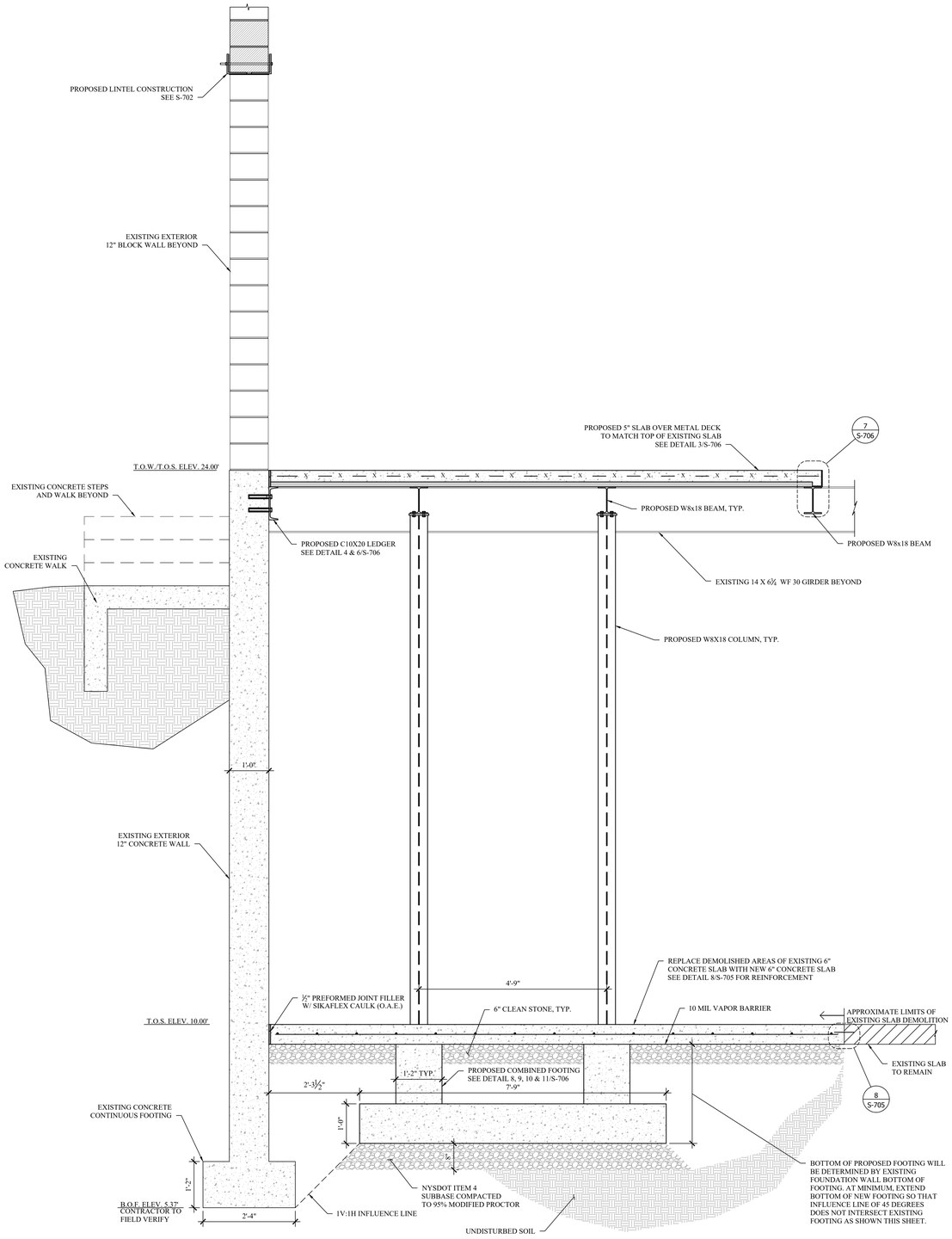

1 S-704 UPPER LEVEL INFILL SECTION 1
SCALE: 3/4" = 1'-0"

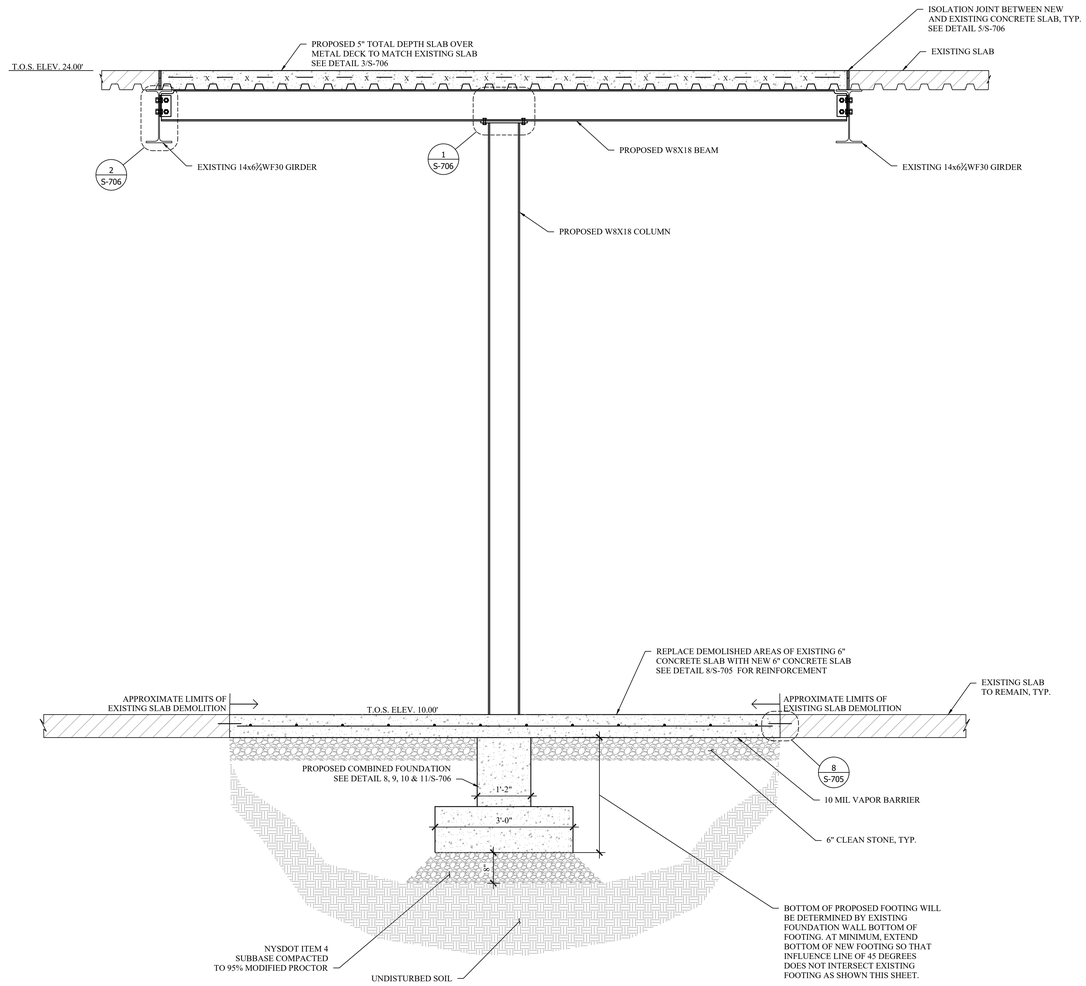

2 S-704 UPPER LEVEL INFILL SECTION 2
SCALE: 3/4" = 1'-0"

MHE ENGINEERING
33 Airport Center Drive, Suite 202
New Windsor, NY 12553
(845) 567-3100
111 Wheatfield Drive, Suite 1
Milford, PA 18337
(570) 296-2765

BID SET

HAZARDOUS MATERIAL NOTE:
THE SERVICES PROVIDED BY MHE, INCLUDING ALL WORK DEPICTED ON MHE PLANS, DO NOT INCLUDE SERVICES RELATED TO THE IDENTIFICATION, CONTROLS OR HANDLING OF HAZARDOUS MATERIALS, INCLUDING SUCH MATERIALS AS ASBESTOS AND LEAD PAINT. ALL TESTING, IDENTIFICATION, ABATEMENT, CONTROLS, AND HANDLING OF HAZARDOUS MATERIALS SHALL BE UNDERTAKEN BY A HAZARDOUS MATERIAL CONSULTANT AND CERTIFIED PROFESSIONALS. IF SUCH MATERIALS HAVE BEEN IDENTIFIED, CONTRACTOR WILL COMMUNICATE DIRECTLY WITH HAZARDOUS MATERIAL PROFESSIONAL FOR THE PERFORMANCE OF ANY WORK ON OR ADJACENT TO SAID MATERIALS. IF UNIDENTIFIED MATERIALS OF CONCERN ARE ENCOUNTERED WHILE UNDERTAKING THE WORK SHOWN HEREON, CONTRACTOR SHALL IMMEDIATELY NOTIFY ENGINEER AND OWNER, AND SHALL OBTAIN DIRECTION FROM THE HAZARDOUS MATERIAL CONSULTANT PRIOR TO THE CONTINUATION OF WORK INVOLVING SUSPECTED MATERIAL.

UDIG·NY SAFE DIGGING STARTS HERE
CALL 811

UNAUTHORIZED ADDITION OR ALTERATION OF THIS PLAN IS A VIOLATION OF SECTION 7209(2) OF THE NEW YORK STATE EDUCATION LAW.

ALL PRODUCTION & INTELLECTUAL PROPERTY RIGHT RESERVED ©

CAESARS LANE WWTP
EXPANSION PROJECT:
PHASE 1
145 CAESARS LN.
NEW WINDSOR, NY 12553
FOR TOWN OF NEW WINDSOR
555 UNION AVE.
NEW WINDSOR, NY 12553

SLUDGE DEWATERING
BUILDING - SECTIONS

REVISIONS

NO.	DESCRIPTION	DATE

ISSUED DATE:	21 NOV, 2024
DESIGN BY:	WPG/PJW
DRAWN BY:	WPG/PJW
CHECKED BY:	JSS/PJW
REVIEWED BY:	JSS/MJL

SHEET NO.
S-704

PROJECT # 18-732 PHASE #1

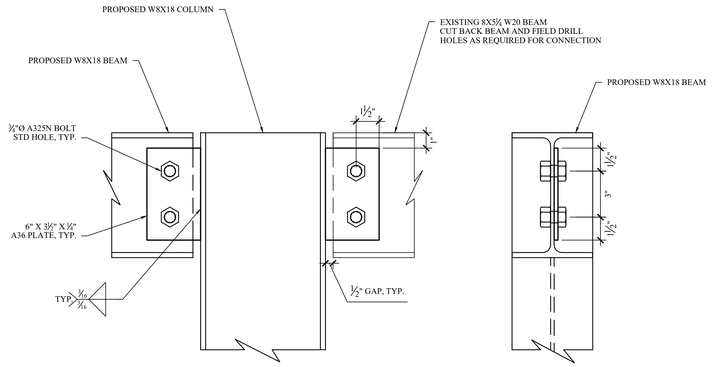

1 S-705 BEAM TO COLUMN CONNECTION
SCALE: 1-1/2" = 1'-0"

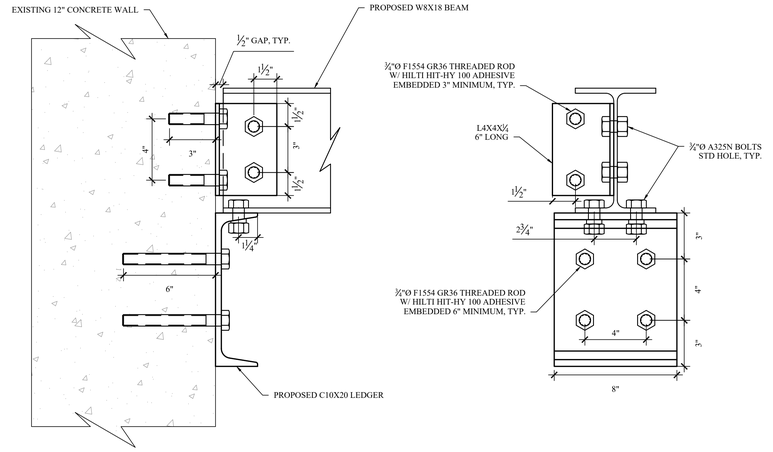

2 S-705 BLOCK INFILL BEAM TO LEDGER CONNECTION
SCALE: 3" = 1'-0"

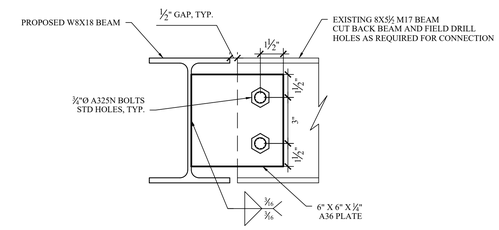

3 S-705 EXISTING BEAM TO BLOCK INFILL BEAM CONNECTION
SCALE: 3" = 1'-0"

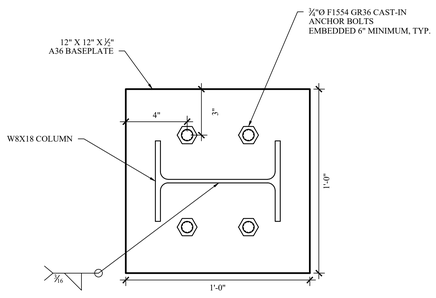

4 S-705 TYPICAL COLUMN BASEPLATE
SCALE: 3" = 1'-0"

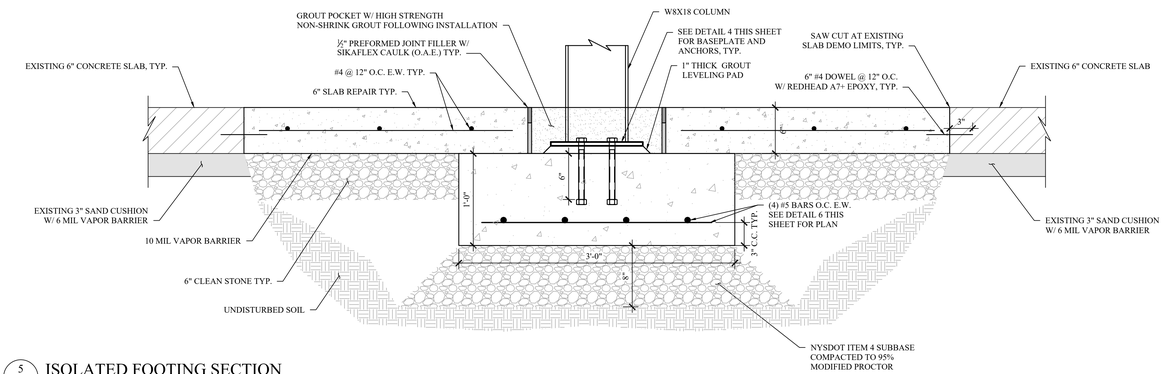

5 S-705 ISOLATED FOOTING SECTION
SCALE: 1" = 1'-0"

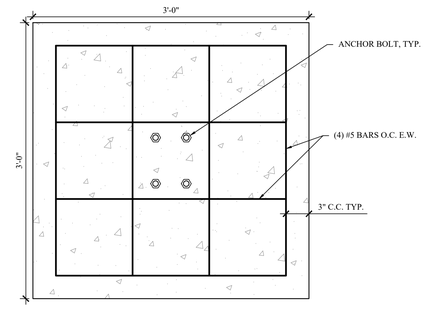

6 S-705 ISOLATED FOOTING REINF. PLAN
SCALE: 1-1/2" = 1'-0"

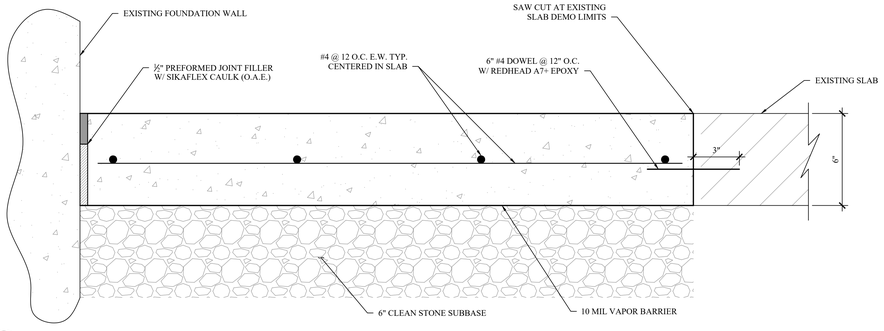

8 S-705 SLAB REPAIR ABOVE COMBINED FOOTING
SCALE: 3" = 1'-0"

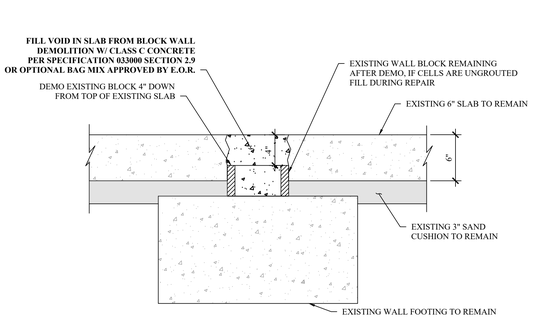

9 S-705 BLOCK WALL DEMO SLAB REPAIR
SCALE: 1-1/2" = 1'-0"

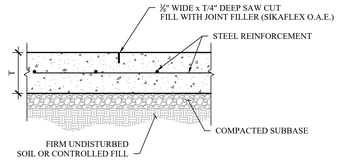

10 S-705 TYPICAL CONTROL JOINT
SCALE: 1" = 1'-0"

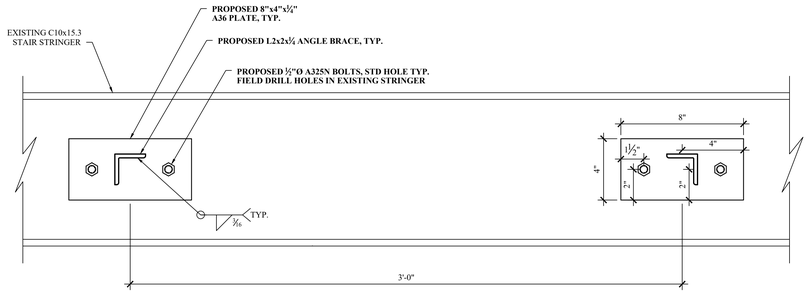

11 S-705 TEMPORARY BRACE CONNECTION TO EXISTING STRINGER
SCALE: 3" = 1'-0"

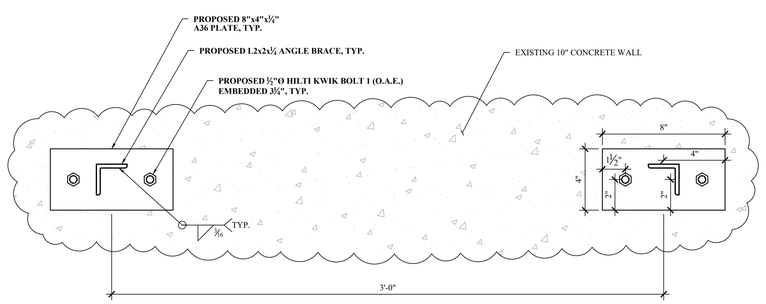

12 S-705 TEMPORARY BRACE CONNECTION TO EXISTING CONCRETE WALL
SCALE: 3" = 1'-0"

MHE ENGINEERING
33 Airport Center Drive, Suite 202
New Windsor, NY 12553
(845) 567-3100
111 Wheatfield Drive, Suite 1
Milford, PA 18337
(570) 296-2765

BID SET

HAZARDOUS MATERIAL NOTE:
THE SERVICES PROVIDED BY MHE, INCLUDING ALL WORK DEPICTED ON MHE PLANS, DO NOT INCLUDE SERVICES RELATED TO THE IDENTIFICATION, CONTROLS OR HANDLING OF HAZARDOUS MATERIALS, INCLUDING SUCH MATERIALS AS ASBESTOS AND LEAD PAINT. ALL TESTING, IDENTIFICATION, ABATEMENT, CONTROLS, AND HANDLING OF HAZARDOUS MATERIALS SHALL BE UNDERTAKEN BY A HAZARDOUS MATERIAL CONSULTANT AND CERTIFIED PROFESSIONALS. IF SUCH MATERIALS HAVE BEEN IDENTIFIED, CONTRACTOR WILL COMMUNICATE DIRECTLY WITH HAZARDOUS MATERIAL PROFESSIONAL FOR THE PERFORMANCE OF ANY WORK ON OR ADJACENT TO SAID MATERIALS. IF UNIDENTIFIED MATERIALS OF CONCERN ARE ENCOUNTERED WHILE UNDERTAKING THE WORK SHOWN HEREON, CONTRACTOR SHALL IMMEDIATELY NOTIFY ENGINEER AND OWNER, AND SHALL OBTAIN DIRECTION FROM THE HAZARDOUS MATERIAL CONSULTANT PRIOR TO THE CONTINUATION OF WORK INVOLVING SUSPECTED MATERIAL.

UDIG·NY SAFE DIGGING STARTS HERE
CALL 811

UNAUTHORIZED ADDITION OR ALTERATION OF THIS PLAN IS A VIOLATION OF SECTION 7209(2) OF THE NEW YORK STATE EDUCATION LAW.

ALL PRODUCTION & INTELLECTUAL PROPERTY RIGHT RESERVED ©

CAESARS LANE WWTP EXPANSION PROJECT: PHASE 1
145 CAESARS LN.
NEW WINDSOR, NY 12553
FOR TOWN OF NEW WINDSOR
555 UNION AVE.
NEW WINDSOR, NY 12553

SLUDGE DEWATERING BUILDING - STRUCTURAL DETAILS

REVISIONS

NO.	DESCRIPTION	DATE

ISSUED DATE:	21 NOV, 2024
DESIGN BY:	WPG/PJW
DRAWN BY:	WPG/PJW
CHECKED BY:	JSS/PJW
REVIEWED BY:	JSS/MJL

SHEET NO.
S-705

PROJECT # 18-732 PHASE #1

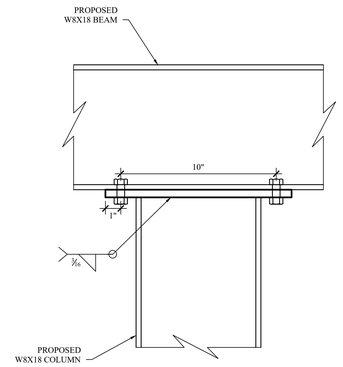

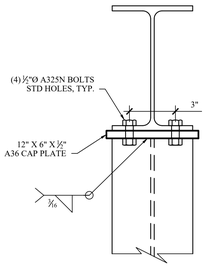

1 S-706 UPPER LEVEL INFILL BEAM TO COLUMN CONNECTION
SCALE: 3" = 1'-0"

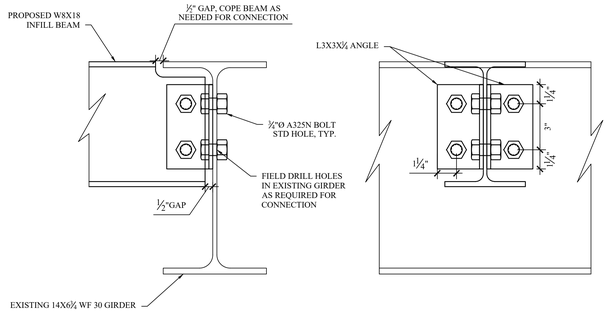

2 S-706 UPPER LEVEL INFILL BEAM TO EXISTING GIRDER CONNECTION
SCALE: 3" = 1'-0"

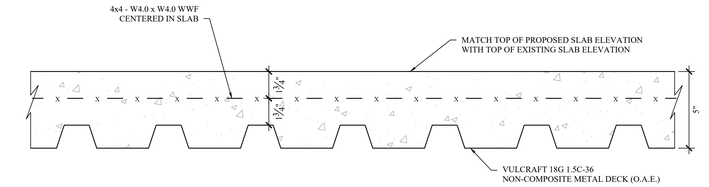

3 S-706 UPPER LEVEL INFILL METAL DECK AND SLAB
SCALE: 3" = 1'-0"

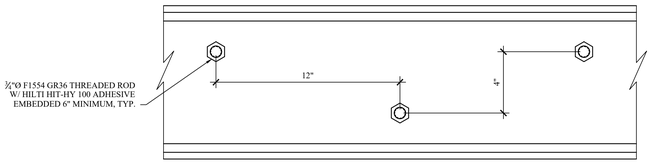

4 S-706 UPPER LEVEL INFILL LEDGER ANCHORAGE
SCALE: 3" = 1'-0"

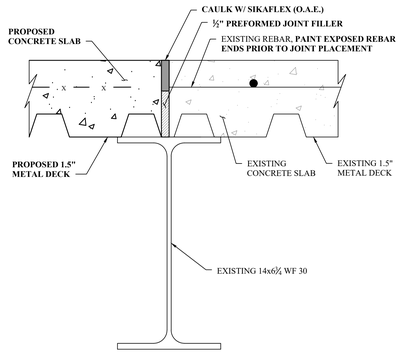

5 S-706 PROPOSED UPPER LEVEL INFILL AND EXISTING SLAB JOINT
SCALE: 3" = 1'-0"

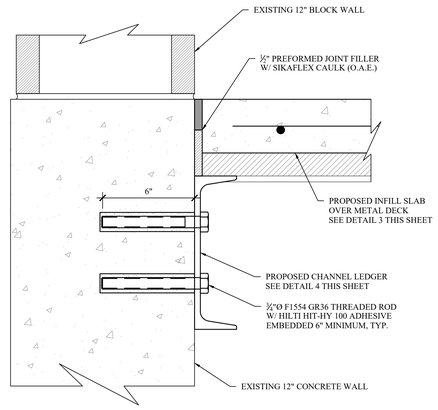

6 S-706 UPPER LEVEL INFILL LEDGER EXPANSION JOINT
SCALE: 3" = 1'-0"

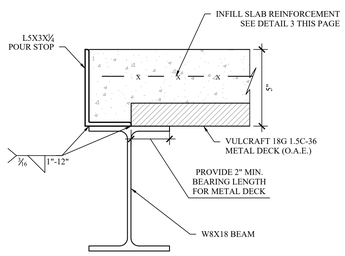

7 S-706 POUR STOP DETAIL
SCALE: 3" = 1'-0"

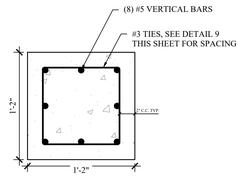

8 S-706 PIER REINFORCEMENT PLAN
SCALE: 1-1/2" = 1'-0"

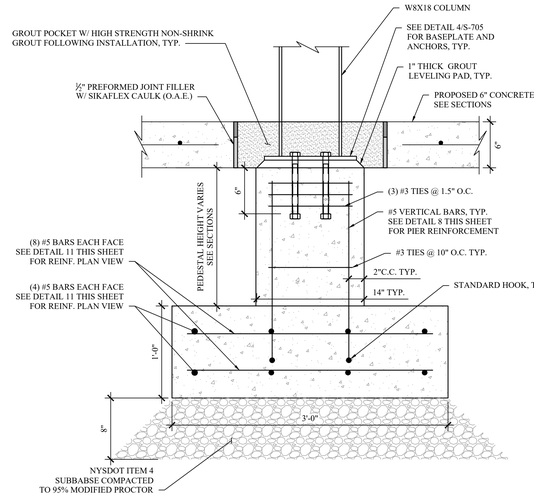

9 S-706 COMBINED FOOTING AND PIER TRANSVERSE SECTION
SCALE: 1-1/2" = 1'-0"

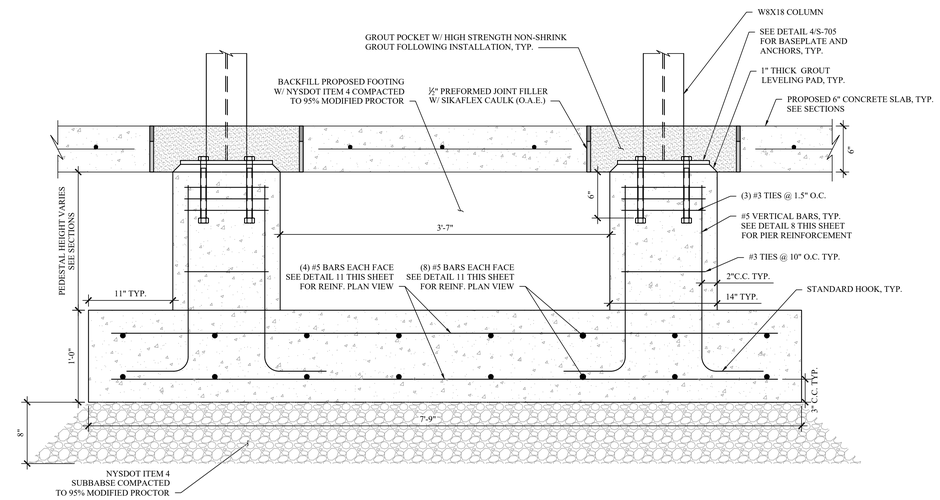

10 S-706 COMBINED FOOTING AND PIERS LONGITUDINAL SECTION
SCALE: 1-1/2" = 1'-0"

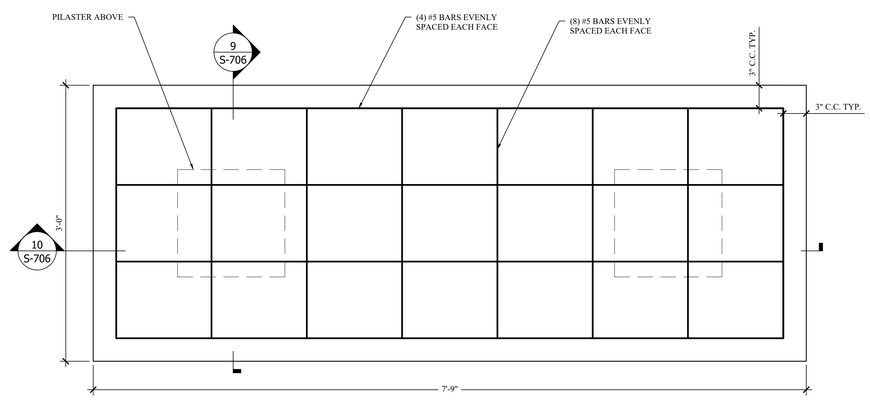

11 S-706 COMBINED FOOTING REINFORCEMENT PLAN
SCALE: 1-1/2" = 1'-0"

MHE ENGINEERING
33 Airport Center Drive, Suite 202
New Windsor, NY 12553
(845) 567-3100
111 Wheatfield Drive, Suite 1
Milford, PA 18337
(570) 296-2765

BID SET

HAZARDOUS MATERIAL NOTE:
THE SERVICES PROVIDED BY MHE, INCLUDING ALL WORK DEPICTED ON MHE PLANS, DO NOT INCLUDE SERVICES RELATED TO THE IDENTIFICATION, CONTROLS OR HANDLING OF HAZARDOUS MATERIALS, INCLUDING SUCH MATERIALS AS ASBESTOS AND LEAD PAINT. ALL TESTING, IDENTIFICATION, ABATEMENT, CONTROLS, AND HANDLING OF HAZARDOUS MATERIALS SHALL BE UNDERTAKEN BY A HAZARDOUS MATERIAL CONSULTANT AND CERTIFIED PROFESSIONALS. IF SUCH MATERIALS HAVE BEEN IDENTIFIED, CONTRACTOR WILL COMMUNICATE DIRECTLY WITH HAZARDOUS MATERIAL PROFESSIONAL FOR THE PERFORMANCE OF ANY WORK ON OR ADJACENT TO SAID MATERIALS. IF UNIDENTIFIED MATERIALS OF CONCERN ARE ENCOUNTERED WHILE UNDERTAKING THE WORK SHOWN HEREON, CONTRACTOR SHALL IMMEDIATELY NOTIFY ENGINEER AND OWNER, AND SHALL OBTAIN DIRECTION FROM THE HAZARDOUS MATERIAL CONSULTANT PRIOR TO THE CONTINUATION OF WORK INVOLVING SUSPECTED MATERIAL.

UDIG·NY SAFE DIGGING STARTS HERE
CALL 811

UNAUTHORIZED ADDITION OR ALTERATION OF THIS PLAN IS A VIOLATION OF SECTION 7209(2) OF THE NEW YORK STATE EDUCATION LAW.

ALL PRODUCTION & INTELLECTUAL PROPERTY RIGHT RESERVED ©

CAESARS LANE WWTP EXPANSION PROJECT: PHASE 1
145 CAESARS LN.
NEW WINDSOR, NY 12553
FOR TOWN OF NEW WINDSOR
555 UNION AVE.
NEW WINDSOR, NY 12553

SLUDGE DEWATERING BUILDING - STRUCTURAL DETAILS CONTINUED

REVISIONS

NO.	DESCRIPTION	DATE

ISSUED DATE:	21 NOV, 2024
DESIGN BY:	WPG/PJW
DRAWN BY:	WPG/PJW
CHECKED BY:	JSS/PJW
REVIEWED BY:	JSS/MJL

SHEET NO.
S-706

PROJECT # 18-732 PHASE #1

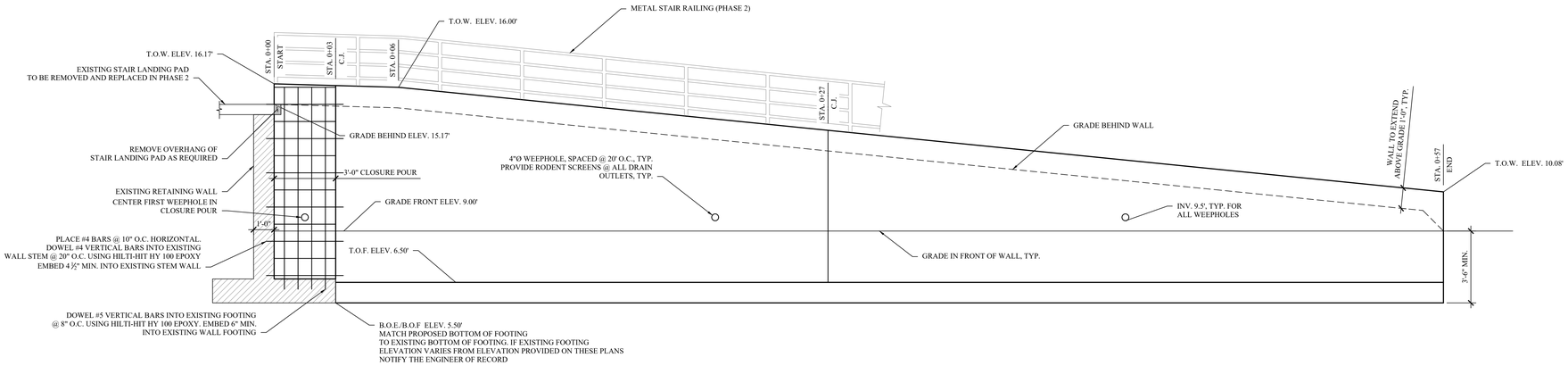

1 S-707 PROPOSED RETAINING WALL ELEVATION

SCALE: 3/8" = 1'-0"

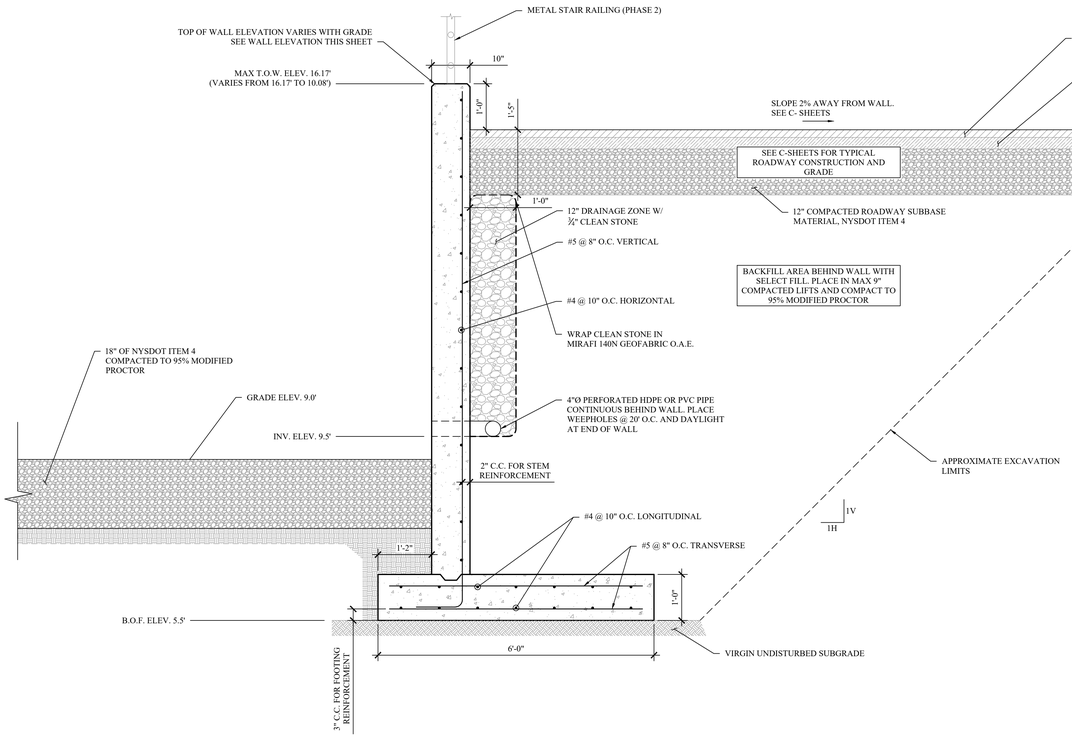

2 S-707 PROPOSED RETAINING WALL TYPICAL SECTION

SCALE: 3/4" = 1'-0"

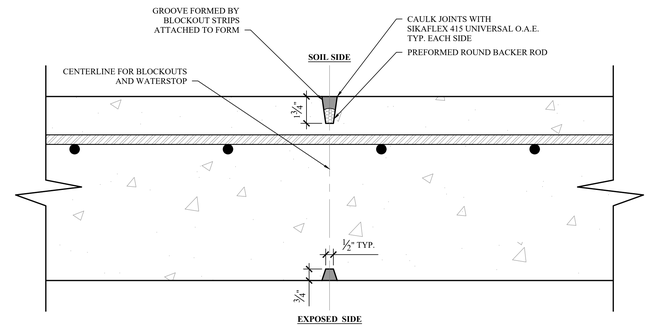

3 S-707 TYPICAL WALL CONTRACTION JOINT DETAIL

SCALE: 3" = 1'

MHE ENGINEERING
33 Airport Center Drive, Suite 202
New Windsor, NY 12553
(845) 567-3100
111 Wheatfield Drive, Suite 1
Milford, PA 18337
(570) 296-2765

BID SET

HAZARDOUS MATERIAL NOTE:

THE SERVICES PROVIDED BY MHE, INCLUDING ALL WORK DEPICTED ON MHE PLANS, DO NOT INCLUDE SERVICES RELATED TO THE IDENTIFICATION, CONTROLS OR HANDLING OF HAZARDOUS MATERIALS, INCLUDING SUCH MATERIALS AS ASBESTOS AND LEAD PAINT. ALL TESTING, IDENTIFICATION, ABATEMENT, CONTROLS, AND HANDLING OF HAZARDOUS MATERIALS SHALL BE UNDERTAKEN BY A HAZARDOUS MATERIAL CONSULTANT AND CERTIFIED PROFESSIONALS. IF SUCH MATERIALS HAVE BEEN IDENTIFIED, CONTRACTOR WILL COMMUNICATE DIRECTLY WITH HAZARDOUS MATERIAL PROFESSIONAL FOR THE PERFORMANCE OF ANY WORK ON OR ADJACENT TO SAID MATERIALS. IF UNIDENTIFIED MATERIALS OF CONCERN ARE ENCOUNTERED WHILE UNDERTAKING THE WORK SHOWN HEREON, CONTRACTOR SHALL IMMEDIATELY NOTIFY ENGINEER AND OWNER, AND SHALL OBTAIN DIRECTION FROM THE HAZARDOUS MATERIAL CONSULTANT PRIOR TO THE CONTINUATION OF WORK INVOLVING SUSPECTED MATERIAL.

UDIG·NY SAFE DIGGING STARTS HERE
CALL 811

UNAUTHORIZED ADDITION OR ALTERATION OF THIS PLAN IS A VIOLATION OF SECTION 7209(2) OF THE NEW YORK STATE EDUCATION LAW.

ALL PRODUCTION & INTELLECTUAL PROPERTY RIGHT RESERVED ©

CAESARS LANE WWTP EXPANSION PROJECT:
PHASE 1
145 CAESARS LN.
NEW WINDSOR, NY 12553
FOR TOWN OF NEW WINDSOR
555 UNION AVE.
NEW WINDSOR, NY 12553

RETAINING WALL DETAILS AND ELEVATION

REVISIONS

NO.	DESCRIPTION	DATE

ISSUED DATE:	21 NOV, 2024
DESIGN BY:	WPG/PJW
DRAWN BY:	WPG/PJW
CHECKED BY:	JSS/PJW
REVIEWED BY:	JSS/MJL

SHEET NO.

S-707

PROJECT # 18-732 PHASE #1

MASONRY NOTES:

1. ALL MASONRY CONSTRUCTION SHALL CONFORM TO THE LATEST EDITION OF THE "BUILDING CODE REQUIREMENTS FOR MASONRY STRUCTURES" ACI 530/TMS 402.
2. ALL BRICK MASONRY UNITS SHALL CONFORM TO ASTM C216.
3. ALL MORTAR SHALL CONFORM TO ASTM C270.
4. ALL GROUT SHALL CONFORM TO ASTM C476.
5. THE MINIMUM SPECIFIED NET AREA COMPRESSIVE STRENGTH OF MASONRY (f'm) SHALL BE 1500 PSI AND SHALL CONSIST OF THE FOLLOWING COMPONENTS
   A. BRICK MASONRY UNITS: 4400 PSI MINIMUM NET AREA COMPRESSIVE STRENGTH
   B. PORTLAND CEMENT MORTAR: TYPE S
   C. GROUT: 1500 psi MINIMUM 28 DAY COMPRESSIVE STRENGTH.

AISI COLD FORMED FRAMING NOTES:

1. METAL STUD SIZES SHOWN ON PLANS AND DETAILS ARE SCHEMATIC IN NATURE. ALL FRAMING MATERIALS AND CONNECTIONS SHALL BE DESIGNED BY CONTRACTOR OR FRAMING MANUFACTUREIR. ALL STUDS AND THEIR CONNECTIONS SHALL BE GALVANIZED AND SHALL COMPLY WITH THE REQUIREMENTS OF AISI SPECIFICATION FOR THE DESIGN OF COLD FORM STEEL STRUCTURAL MEMBERS, LATEST EDITION.
2. ALL METAL STUDS SHALL HAVE A MIN. YIELD STRENGTH OF 50 KSI.
3. STEEL STUDS: MANUFACTURER'S STANDARD C-SHAPED STEEL STUDS, OF WEB DEPTHS INDICATED, PUNCHED, WITH STIFFENED FLANGES, AND AS FOLLOWS:
   A. LOAD BEARING FRAMING:
      a. MINIMUM BASE-METAL THICKNESS: 16 GA. (54 MILS)
      b. FLANGE WIDTH: 1-5/8 INCHES.
   B. EXTERIOR NON-LOAD BEARING FRAMING:
      a. MINIMUM BASE-METAL THICKNESS: 18 GA. (43 MILS)
      b. FLANGE WIDTH: 1-5/8 INCHES.
   C. INTERIOR NON-LOAD BEARING PARTITIONS:
      a. MINIMUM BASE-METAL THICKNESS: 25 GA. (18 MILS)
      b. FLANGE WIDTH: 1-5/8 INCHES.
4. INSTALL CONTINUOUS TRACKS SIZED TO MATCH STUDS. ALIGN TRACKS ACCURATELY AND SECURELY ANCHOR TO SUPPORTING STRUCTURE AT EACH STUD LOCATION W/ (2) 1½" PAF FASTENERS, MIN SHANK DIA. 0.157".
5. FASTEN BOTH FLANGES OF STUDS TO BOTTOM TRACK UNLESS OTHERWISE INDICATED. SPACE STUDS AS FOLLOWS:
6. STUD SPACING: 24" O.C. MAX.
7. SET STUDS PLUMB, EXCEPT AS NEEDED FOR DIAGONAL BRACING OR REQUIRED FOR NON-PLUMB WALLS OR WARPED SURFACES AND SIMILAR REQUIREMENTS.
8. ISOLATE NON-LOAD-BEARING STEEL FRAMING FROM BUILDING STRUCTURE TO PREVENT TRANSFER OF VERTICAL LOADS WHILE PROVIDING LATERAL SUPPORT.
9. BRIDGE ALL JOISTS, RAFTERS AND WALL STUDS, WHERE PANEL BLOCKING IS NOT REQUIRED, WITH BRIDGING CHANNEL AT 4'-0" ON CENTER MAXIMUM. SCREW OR WELD BOTTOM OF BRIDGING AFTER SHEATHING IS IN PLACE.
10. ALL CLIP AND UTILITY ANGLES SHALL BE THE SAME GAUGE AS THE MEMBERS BEING CONNECTED. IF THE MEMBERS BEING CONNECTED ARE DIFFERENT GAUGES, ANGLES SHALL BE A MINIMUM OF THE THINNER GAUGE.
11. FOR ALL OPENINGS LARGER THAN JOIST FRAMING, FRAME WITH DOUBLE-HEADERS AND TRIMMERS AROUND OPENINGS. PROVIDE DOUBLE BOX JOISTS AROUND PARTITION WALLS PARALLEL TO JOISTS.
12. CONTRACTOR SHALL SUBMIT SHOP DRAWINGS OF ALL LIGHT GAUGE METAL FRAMING TO THE ARCHITECT/ENGINEER PRIOR TO MANUFACTURING.
13. IF BASIS OF DESIGN MANUFACTURER'S LIGHT GAUGE FRAMING IS NOT USED, CONTRACTOR SHALL PROVIDE ALL SPECIFICATIONS AND MATERIAL PROPERTIES FOR THE SELECTED LIGHT GAUGE MANUFACTURER FOR APPROVAL PRIOR TO THE COMMENCEMENT OF CONSTRUCTION.

WELDING NOTES:

1. ALL WELDING SHALL BE CONDUCTED BY CERTIFIED WELDERS IN ACCORDANCE WITH AWS D1.1, LATEST EDITION FOR STRUCTURAL STEEL AND AWS D1.3, LATEST EDITION FOR STRUCTURAL SHEET STEEL.
2. THE CONTRACTOR SHALL BEAR FULL RESPONSIBILITY FOR PROTECTING EXISTING EQUIPMENT, MATERIAL, BUILDING STRUCTURE, AND BUILDING COMPONENTS DURING ANY FIELD WELDING OPERATIONS.

COLD FORMED METAL TRUSS NOTES:

1. SEE ROOF PLAN FOR LOCATION OF EACH TYPE OF TRUSS. TRUSS DESIGNER AND MANUFACTURER SHALL VERIFY ALL TRUSS DIMENSIONS SHOWN HEREON.
2. ALL ROOF TRUSSES SHALL BE DESIGNED AND SEALED BY A REGISTERED PROFESSIONAL ENGINEER LICENSED IN THE STATE OF NEW YORK.
3. ALL TRUSSES SHALL BE FABRICATED BY A NEW YORK STATE APPROVED MANUFACTURER.
4. CONTRACTOR SHALL BE RESPONSIBLE FOR ALL TEMPORARY BRACING, TRUSSES SHALL BE ERECTED IN ACCORANCE WITH TRUSS MANUFACTURER'S SPECIFICATIONS.
5. SHOP DRAWINGS OF ALL ROOF TRUSSES SHALL BE SUBMITTED TO THE ARCHITECT/ENGINEER PRIOR TO MANUFACTURING.
6. THE ROOF TRUSSES SHALL BE DESIGNED FOR THE FOLLOWING LOADS:
   A. LIVE LOAD TOP CHORD = SNOW 25.4 PSF
   B. LIVE LOAD TOP CHORD = WIND 10 PSF
   C. DEAD LOAD TOP CHORD = 10 PSF
   D. LIVE LOAD BOTTOM CHORD = 10 PSF
   E. DEAD LOAD BOTTOM CHORD = 10 PSF
   F. UPLIFT FROM WIND: SEE UPLIFT TABLE, THIS SHEET.
7. LOADS DO NOT INCLUDE TRUSS SELF WEIGHT, NOR ANY MECHANICAL EQUIPMENT CONCENTRATED LOADS. LOADS DO NOT INCLUDE NONUNIFORM SNOW ACCUMULATION DUE TO DRIFTS AND/OR VALLEYS. TRUSSES SHALL BE DESIGNED FOR NON-UNIFORM LOADS IN ACCORDANCE WITH ASCE 7-16.
8. TRUSS CONFIGURATION, ALONG WITH LOCATION OF ALL NECESSARY VERTICAL AND HORIZONTAL BRACING SHALL BE DETERMINED BY THE TRUSS DESIGN ENGINEER.
9. TRUSS DESIGNER/MANUFACTURER SHALL COORDINATE AND FRAME ANY AREAS INVOLVING MECHANICAL PENETRATIONS OF THE ROOF.
10. CONTRACTOR / TRUSS DESIGNER / MANUFACTURER SHALL PROVIDE PROPER ROOF DECK SUPPORT AT ALL LOCATIONS, INCLUDING HIPS AND VALLEYS.
11. ROOF DECK SHALL BE 19/32"APA RATED C-D EXPOSURE 1SHEATHING.

CONCRETE NOTES:

1. CONCRETE SHALL CONFORM TO ACI 211.1, ACI 301, ACI 304R (WHEN PUMPING), AND ACI 318-14. AGGREGATE SHALL CONFORM TO ASTM C33. COMPRESSIVE STRENGTH, RANGE OF SLUMP, WATER-TO-CEMENT RATIO, AND AIR ENTRAINMENT SHALL BE PER THE CONCRETE CLASS SPECIFIED HEREIN AND IN ACCORDANCE WITH CAST-IN-PLACE CONCRETE SPECIFICATION 033000. SUBMIT COPIES OF TEST REPORTS SHOWING THAT THE MIX HAS BEEN SUCCESSFULLY TESTED TO PRODUCE CONCRETE WITH THE PROPERTIES SPECIFIED. TEST REPORTS SHALL BE SUBMITTED TO THE ENGINEER FOR APPROVAL PRIOR TO CONCRETE PLACEMENT.
   A. CONCRETE CLASSIFICATIONS PER SPECIFICATION SECTION 033000:
      a. FOOTINGS BELOW GRADE: CLASS A
      b. INTERIOR SLABS-ON-GROUND: CLASS C
      c. INTERIOR SUSPENDED SLABS: CLASS E
      d. CAST-IN-PLACE CONCRETE RETAINING WALL: CLASS B
   B. CONCRETE FINISHES PER SPECIFICATION SECTION 033000:
      a. FOUNDATIONS BELOW GRADE: AS-CAST SF-2.0 FINISH
      b. INTERIOR SLABS: TROWEL FINISH
      c. CAST-IN-PLACE CONCRETE RETAINING WALL: AS-CAST SF-2.0 FINISH
2. CEMENT SHALL CONFORM TO ASTM C150, TYPE I/II AND SHALL HAVE A CURING PERIOD OF NOT LESS THAN 7 DAYS.
3. CONCRETE SHALL BE WET CURED, USING BURLAP OR COTTON CURING MATS, OR CURED USING ASTM D4397 POLYETHYLENE SHEETING IN ACCORDANCE WITH ASTM C171. WET THE ENTIRE EXPOSED SURFACE OF THE CONCRETE THOROUGHLY WITH A FINE SPRAY OF WATER AND COVER WITH SHEETING THROUGHOUT THE CURING PERIOD. LAY SHEETING DIRECTLY ON CONCRETE SURFACE. PROVIDE SHEETING NOT LESS THAN 18 INCHES WIDER THAN CONCRETE SURFACE. OVERLAP EDGES 12 INCHES AND CONTINUOUSLY TAPE JOINTS.
4. PUMPING SHALL NOT RESULT IN SEPARATION OR LOSS OF MATERIALS NOR CAUSE INTERRUPTIONS SUFFICIENT TO PERMIT LOSS OF PLASTICITY BETWEEN SUCCESSIVE INCREMENTS. LOSS OF SLUMP IN PUMPING EQUIPMENT SHALL NOT EXCEED 2 INCHES. CONCRETE SHALL NOT BE CONVEYED THROUGH PIPE MADE OF ALUMINUM OR ALUMINUM ALLOY. RAPID CHANGES IN PIPE SIZES SHALL BE AVOIDED. MAXIMUM SIZE OF COURSE AGGREGATE SHALL BE LIMITED TO 33 PERCENT OF THE DIAMETER OF THE PIPE. MAXIMUM SIZE OF WELL ROUNDED AGGREGATE SHALL BE LIMITED TO 40 PERCENT OF THE PIPE DIAMETER. SAMPLES FOR TESTING SHALL BE TAKEN AT BOTH THE POINT OF DELIVERY TO THE PUMP AND AT THE DISCHARGE END.
5. CONCRETE SHALL NOT BE PLACED WHEN WEATHER CONDITIONS PREVENT PROPER PLACEMENT AND CONSOLIDATION INCLUDING PERIODS OF PRECIPITATION. TRANSPORT CONCRETE AS RAPIDLY AS PRACTICABLE TAKING PRECAUTION TO PREVENT SEGREGATION OR LOSS OF INGREDIENTS. PUMPING IN ACCORDANCE WITH ACI 304 SHALL BE PERMITTED. DO NOT EXCEED A FREE VERTICAL DROP OF 3 FEET FROM THE POINT OF DISCHARGE. PLACE CONCRETE IN ONE CONTINUOUS OPERATIONS FROM ONE SIDE OF SLAB TO THE OTHER. POSITION GRADE STAKES AT 12 FEET ON CENTER MAXIMUM IN EACH DIRECTION.
6. REINFORCING BARS SHALL CONFORM TO ASTM A615 AND SHALL HAVE A MINIMUM YIELD STRENGTH OF 60 KSI. WELDED WIRE FABRIC REINFORCEMENT SHALL CONFORM TO ASTM A1064. REINFORCEMENT SHALL NOT CONTAIN RUST, SCALE, OIL, GREASE, CLAY, OR FOREIGN SUBSTANCES THAT WOULD REDUCE THE CONCRETE BONDING STRENGTH. REMOVE LOOSE RUST PRIOR TO PLACEMENT OF REINFORCEMENT.
7. REINFORCEMENT SPLICES SHALL BE KEPT TO A PRACTICAL MINIMUM. UNLESS OTHERWISE INDICATED, MINIMUM LAP SPLICE LENGTH PER LAP SPLICE TABLE, THIS SHEET.
8. PROVIDE MINIMUM 2" OF CONCRETE COVER FOR ALL REINFORCING STEEL UNLESS OTHERWISE INDICATED.
9. CONCRETE FOOTINGS AND MAT FOUNDATIONS SHALL BE PLACED MONOLITHICALLY WITH THE EXCEPTION THAT VERTICAL CONSTRUCTION JOINTS WILL BE ALLOWED IF EPOXY BONDING COMPOUND IS APPLIED TO THE ROUGHENED SURFACE OF THE HARDENED CONCRETE.
10. INTERIOR SLABS: THE CONTRACTOR SHALL PROVIDE CONTRACTION JOINTS AS INDICATED. JOINTS MAY BE SAWCUT OR CUT WITH A JOINTING TOOL. SAWED JOINTS SHALL BE COMPLETED WITHIN 4 TO 12 HOURS AFTER PLACEMENT OF CONCRETE. JOINTS SHALL INTERSECT WITH THE CORNERS OF ISOLATION JOINT AT COLUMN LOCATIONS, IF ANY ARE PRESENT, AND BE SPACED A MAXIMUM OF 15 FEET ON CENTER, UNLESS NOTED OTHERWISE.
11. REINFORCEMENT SUPPORTS SHALL BE CONCRETE OR OTHER NON-CORRODIBLE MATERIAL HAVING A COMPRESSIVE STRENGTH EQUAL TO OR GREATER THAN THE COMPRESSIVE STRENGTH OF THE CONCRETE BEING PLACED.
12. PROVIDE A 3/4" CHAMFER ON ALL EXPOSED CONCRETE CORNERS.
13. EPOXY BONDING COMPOUND SHALL BE USED ON ALL CONTACTING SURFACES BETWEEN EXISTING CONCRETE AND NEW CONCRETE. EPOXY BONDING COMPOUND SHALL CONFORM TO ASTM C881, TYPE AND GRADE TO BE IN ACCORDANCE WITH APPROPRIATE USE INDICATED IN SPECIFICATION 033000 CAST-IN-PLACE CONCRETE. DO NOT ALLOW COMPOUND TO HARDEN PRIOR TO CONCRETE PLACEMENT. BONDING AGENT USED SHALL BE NSF 61 APPROVED.
14. PLACE, CONSOLIDATE AND IMMEDIATELY STRIKE OFF CONCRETE TO OBTAIN PROPER CONTOUR GRADE AND ELEVATION BEFORE BLEEDWATER APPEARS. PERMIT CONCRETE TO ATTAIN A SET SUFFICIENT FOR FLOATING AND SUPPORTING THE WEIGHT OF THE FINISHER AND EQUIPMENT. IF BLEEDWATER IS PRESENT PRIOR TO FLOATING THE SURFACE, DRAG THE EXCESS WATER OFF OR REMOVE BY ABSORPTION WITH POROUS MATERIALS. DO NOT USE DRY CEMENT TO ABSORB BLEEDWATER.
15. UNLESS OTHERWISE NOTED, ALL CONCRETE CONSTRUCTION SHALL MEET THE SPECIFIED TOLERANCES OF ACI 117. TOP ELEVATIONS SHALL MATCH THE SPECIFIED ELEVATIONS WITHIN A TOLERANCE OF ±1/4"
16. THE REQUIREMENTS OF ACI 302.1R SHALL BE IN EFFECT FOR THE CONSTRUCTION OF ALL SLABS ON GROUND.
17. NO CONCRETE SHALL BE PLACED UNTIL ALL EMBEDDED ITEMS (I.E. PROCESS, ELECTRICAL, MECHANICAL, ETC) HAVE BEEN SET. CONTRACTOR IS RESPONSIBLE FOR COORDINATING ALL TRADES.
18. ALL BAR PLACING AND BENDING SHALL BE IN ACCORDANCE WITH ACI 315.
19. PERFORM COMPRESSIVE TESTS IN ACCORDANCE WITH ASTM C39. OBTAIN ONE COMPOSITE SAMPLE FOR EACH DAY'S POUR OF EACH CONCRETE MIXTURE EXCEEDING 5 CU. YD., BUT LESS THAN 25 CU. YD., PLUS ONE SET FOR EACH ADDITIONAL 50 CU. YD. OR FRACTION THEREOF. TAKE PRECAUTIONS TO PREVENT EVAPORATION AND LOSS OF WATER FROM SPECIMENS. TEST ONE CYLINDER AT 7 DAYS, AND TWO (THREE FOR 4"x8" CYLINDERS) CYLINDERS AT 28 DAYS AND HOLD ONE IN RESERVE. PERFORM SLUMP TESTS IN ACCORDANCE WITH ASTM C143. PERFORM AIR CONTENT TESTS IN ACCORDANCE WITH ASTM C173 OR ASTM C231. SUBMIT ALL TEST DATA TO THE ENGINEER.
20. CONSOLIDATE CONCRETE WITH HIGH FREQUENCY, INTERNAL, MECHANICAL VIBRATING EQUIPMENT SUPPLEMENTED BY HAND SPADING AND TAMPING. FURNISH A SPARE VIBRATOR ON THE JOB SITE WHENEVER CONCRETE IS PLACED. OPERATE VIBRATORS WITH VIBRATORY ELEMENT SUBMERGED IN THE CONCRETE, WITH A MINIMUM FREQUENCY OF NOT LESS THAN 6000 IMPULSES PER MINUTE WHEN SUBMERGED. INSERT AND WITHDRAW VIBRATORS AT INTERVALS APPROXIMATELY 18 INCHES APART.
21. ELASTOMERIC JOINT SEALANT SHALL CONFORM TO ASTM C920, TYPE S, GRADE P, CLASS 25.

CONCRETE LAP SPLICES			
BAR	LENGTH, IN. (U.N.O.)		
	F'c = 3000 PSI	F'c = 3500 PSI	F'c = 4000 PSI
#3	13	12	12
#4	18	16	15
#5	22	20	19
#6	26	24	23
#7	41	38	36
#8	54	50	47

SPECIAL INSPECTIONS:

ALL SPECIAL INSPECTIONS LISTED ARE IN ADDITION TO ALL INSPECTION REQUIRED BY STATE AND LOCAL BUILDING CODES. ALL SPECIAL INSPECTIONS SHALL BE PERFORMED BY AN AGENCY RETAINED AND PAID BY THE OWNER OR OWNER'S REPRESENTATIVE. THE APPROVED AGENCY SHALL PROVIDE ALL INFORMATION AS NECESSARY FOR THE BUILDING OFFICIAL TO DETERMINE THAT THE AGENCY MEETS THE APPLICABLE REQUIREMENTS. COPIES OF NECESSARY TEST AND INSPECTION RECORDS SHALL BE FILED WITH THE BUILDING OFFICIAL AND REGISTERED DESIGN PROFESSIONAL. ALL SPECIAL INSPECTIONS AND REPORTS SHALL BE IN ACCORDANCE WITH CHAPTER 17 OF THE 2020 NEW YORK STATE BUILDING CODE LATEST REVISION.

CONTRACTOR IS RESPONSIBLE FOR COORDINATION WITH OWNER'S DESIGNATED INSPECTOR FOR SCHEDULING OF ALL SPECIAL INSPECTIONS. CONTRACTOR SHALL NOTIFY INSPECTOR MINIMUM 24 HOURS PRIOR TO NEED OF INSPECTION.

THE OWNER RESERVES THE RIGHT TO BACK CHARGE THE CONTRACTOR FOR ANY COSTS ASSOCIATED WITH ADDITIONAL SPECIAL INSPECTIONS REQUIRED DUE TO CANCELLATION OF SCHEDULED INSPECTIONS AND RE-INSPECTION OF PREVIOUSLY FAILED INSPECTIONS.

SPECIAL INSPECTIONS REQUIRED INCLUDE BUT ARE NOT LIMITED TO:

CONCRETE:
1. PERIODIC INSPECTION OF REINFORCING STEEL.
2. PERIODIC INSPECTION OF ANCHORS CAST IN CONCRETE.
3. INSPECTION OF ANCHORS POST-INSTALLED IN HARDENED CONCRETE.
   A. CONTINUOUS INSPECTION OF ADHESIVE ANCHORS INSTALLED IN HORIZONTALLY OR UPWARDLY INCLINED ORIENTATIONS TO RESIST SUSTAINED TENSION LOADS.
   B. PERIODIC INSPECTION OF MECHANICAL ANCHORS AND ADHESIVE ANCHORS NO DEFINED IN 3.1.
4. PERIODIC VERIFICATION OF DESIGN MIX.
5. PRIOR TO CONCRETE PLACEMENT, FABRICATE SPECIMENS FOR STRENGTH TESTS, PERFORM SLUMP, AIR, AND TEMPERATURE TESTS; CONTINUOUS.
6. CONTINUOUS INSPECTION OF PLACEMENT & FOR PROPER APPLICATION TECHNIQUES.
7. PERIODIC INSPECTION FOR MAINTENANCE OF SPECIFIED CURING TEMPERATURE AND TECHNIQUES.
8. PERIODIC INSPECTION OF ERECTION OF PRECAST CONCRETE MEMBERS.
9. PERIODIC INSPECTION OF FORMWORK FOR SHAPE, LOCATION AND DIMENSIONS, OF THE CONCRETE MEMBER BEING FORMED.

SOILS:
1. CONTINUOUS INSPECTION OF
   A. PROPER MATERIALS
   B. DENSITIES
   C. LIFT THICKNESSES DURING PLACEMENT
   D. COMPACTION OF CONTROLLED FILL
2. PERIODIC INSPECTION OF
   A. MATERIALS BELOW FOOTINGS ADEQUATE TO ACHIEVE THE DESIGN BEARING CAPACITY
   B. EXCAVATIONS ARE EXTENDED TO PROPER DEPTH AND HAVE REACHED PROPER MATERIAL
   C. CLASSIFICATION AND TESTING OF CONTROLLED FILL MATERIALS
   D. SUBGRADE PRIOR TO PLACEMENT OF COMPACTED FILL
3. THE APPROVED SOILS REPORT, IF ANY EXISTS, SHALL BE USED TO DETERMINE COMPLIANCE.

NYSBC 2020 STRUCTURAL PROVISIONS:

THE STRUCTURE SHOWN HEREON HAS/SHALL BE DESIGNED FOR THE FOLLOWING IN ACCORDANCE WITH NYSBC 2020:

FLOOR LIVE LOAD:
FIRST FLOOR CORRIDORS AND COMMON AREA = 100 PSF
CORRIDORS (ABOVE 1ST FLOOR) = 80 PSF
CLASSROOMS = 40 PSF
OFFICES = 50 PSF

ROOF LIVE LOAD:
DISTRIBUTED LOAD = 20 PSF (SNOW LOAD GOVERNS)
CONCENTRATED LOAD = 300 LBS

ROOF SNOW LOAD:
GROUND SNOW LOAD (P/g) = 30 PSF
FLAT ROOF SNOW LOAD (P/f) = 22 PSF
SNOW EXPOSURE FACTOR (C/e) = 0.9
SNOW IMPORTANCE FACTOR (I) = 1.10
THERMAL FACTOR (C/t) = 1.0
SLOPE FACTOR (C/s) = 1.0
DRIFT SURCHARGE (P/d) = 51.32 PSF
WIDTH OF DRIFT (w) = 11.47 FT

WIND LOAD:
BASIC WIND SPEED = 120 MPH
BUILDING CATEGORY = RISK CATEGORY III
WIND EXPOSURE = B
WIND DIRECTIONALITY FACTOR = Kd=0.85
TOPOGRAPHIC FACTOR = Kzt=1.0
GUST FACTOR = 0.85
ENCLOSURE CLASSIFICATION = ENCLOSED
APPLICABLE. INTERNAL PRESSURE COEFF. = ±0.18

COMPONENTS & CLADDING PRESSURES:

ROOF WIND UPLIFT PRESSURES (PSF)					
ZONE	< 10 SQ. FT.	< 20 SQ. FT.	< 50 SQ. FT.	< 100 SQ. FT.	< 500 SQ. FT.
1	-36.9	-36.9	-31.3	-27.1	-27.1
2e	-36.9	-36.9	-31.3	-27.1	-27.1
2n	-58.8	-51.5	-41.9	-34.6	-34.6
2r	-58.8	-51.5	-41.9	-34.6	-34.6
3e	-58.8	-51.5	-41.9	-34.6	-34.6
3r	-75.8	-61.9	-43.5	-43.5	-43.5
4	-28.1	-26.9	-25.4	-24.2	-24.2
5	34.7	-32.4	-29.3	-26.9	-26.9

NOTES:
1. WIND PRESSURES SHOWN ARE ULTIMATE AND CAN BE CONVERT TO SERVICE BY MULTIPLYING BY 0.6
2. JOIST NET UPLIFT LOAD COMBINATION IS 0.6D+0.6W. "D" = 12 PSF
3. WIDTH OF PRESSURE COEFFICIENT ZONE, a = 5.5 FT.

SEISMIC DESIGN DATA:
OCCUPANCY RISK CATEGORY = III
SEISMIC IMPORTANCE FACTOR = 1.25
SITE CLASS = D (ASSUMED)
MAPPED SPECTRAL RESPONSE ACCELERATIONS: S/s = 0.225 AND S/1 = 0.056
SPECTRAL RESPONSE PARAMETERS: S/DS = 0.24 AND S/D1 = 0.089
SEISMIC DESIGN CATEGORY = B
SEISMIC RESPONSE COEFFICIENT: C/S = 0.0867
RESPONSE MODIFICATION COEFFICIENT: R = 3.5
ANALYSIS PROCEDURE = EQUIVALNET LATERAL FORCE METHOD
DESIGN BASE SHEAR = 17.33 KIPS
BASIC SEISMIC FORCE RESIST. SYS. = C.4.STEEL ORDINARY MOMENT FRAMES

GEOTECHNICAL DESIGN DATA:
ALLOWABLE BEARING STRENGTH = 4000 PSF

ROOF RAIN LOAD DATA:
RAIN INTENSITY (i) = 3.02 IN./HR.

SHEET LIST	
SHEET NUMBER	SHEET NAME
S-900	CONTROL BUILDING - STRUCTURAL NOTES AND PROVISIONS
S-901	CONTROL BUILDING - FOUNDATION PLAN
S-902	CONTROL BUILDING - SLAB PLAN
S-903	CONTROL BUILDING - WALL FRAMING PLAN
S-904	CONTROL BUILDING - ROOF FRAMING PLAN
S-905	CONTROL BUILDING - BUIDLING SECTIONS
S-906	CONTROL BUILDING - WALL SECTIONS

MHE ENGINEERING
33 Airport Center Drive, Suite 202
New Windsor, NY 12553
(845) 567-3100
111 Wheatfield Drive, Suite 1
Milford, PA 18337
(570) 296-2765

BID SET

UDIG·NY SAFE DIGGING STARTS HERE CALL 811

UNAUTHORIZED ADDITION OR ALTERATION OF THIS PLAN IS A VIOLATION OF SECTION 7209(2) OF THE NEW YORK STATE EDUCATION LAW.

ALL PRODUCTION & INTELLECTUAL PROPERTY RIGHTS RESERVED ©

CAESARS LANE WWTP EXPANSION PROJECT
145 CAESARS LN.
NEW WINDSOR, NY 12553

FOR TOWN OF NEW WINDSOR
555 UNION AVE.
NEW WINDSOR, NY 12553

CONTROL BUILDING - STRUCTURAL NOTES AND PROVISIONS

REVISIONS

NO.	DESCRIPTION	DATE

ISSUED DATE:	21 NOV, 2024
DESIGNED BY:	WPG/WRB
DRAWN BY:	WRB
CHECKED BY:	JSS
REVIEWED BY:	MJL

SHEET NO.

S-900

PROJECT # 18-732 PHASE # 1

C:\Users\bowen\Documents\18-732 Caesars Lane WWTP - 09 Control Building - Structural_wbowen04.rvt 11/21/2024 11:52:23 AM

FOUNDATION SCHEDULE				
MARK	TYPE	WIDTH	FOUNDATION THICKNESS	LENGTH
FB	CONT. STRIP FOOTING	2' - 0"	1' - 0"	302' - 8"

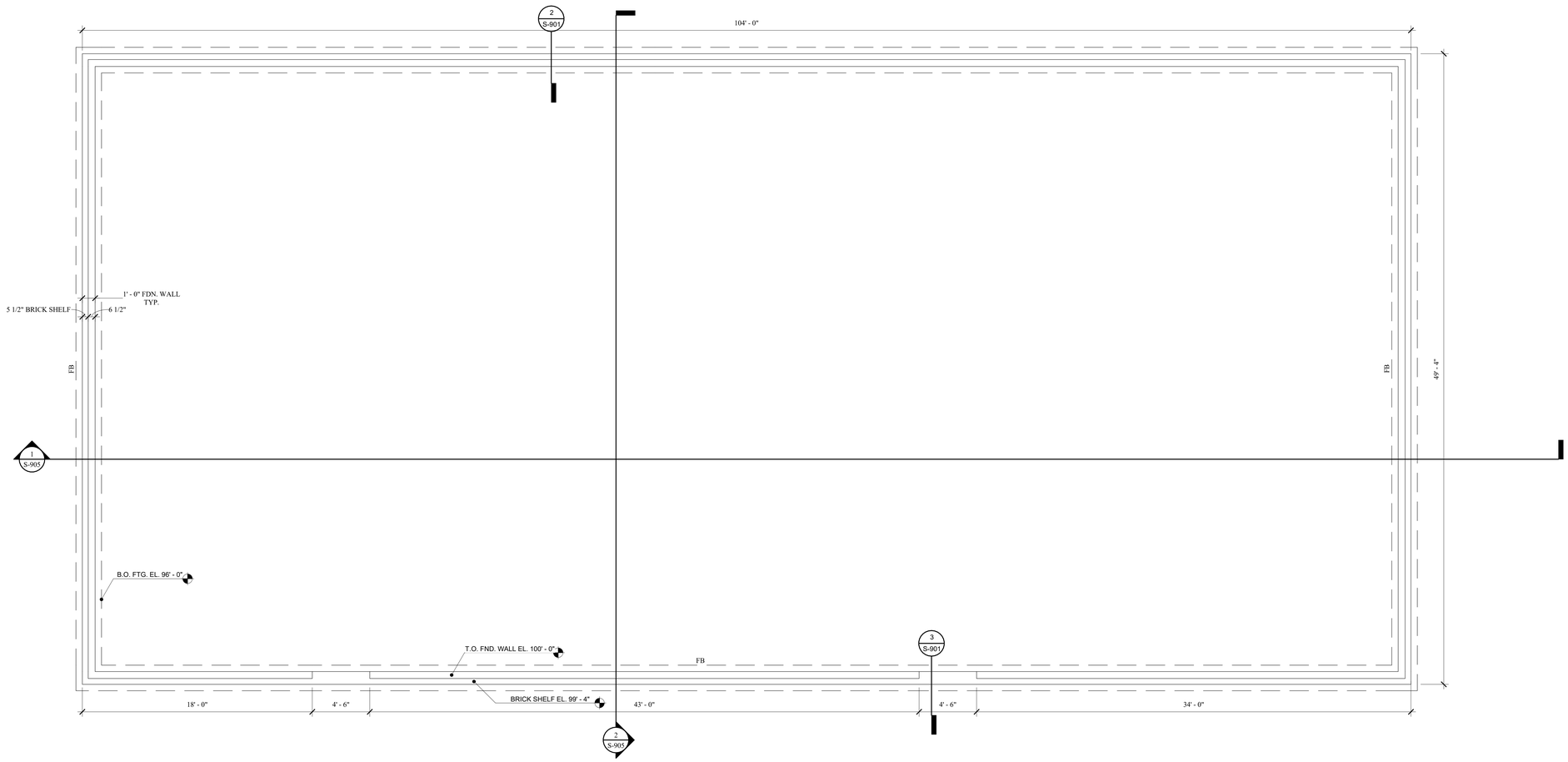

1 S-901 FOUNDATION PLAN
SCALE: 1/4" = 1'-0"

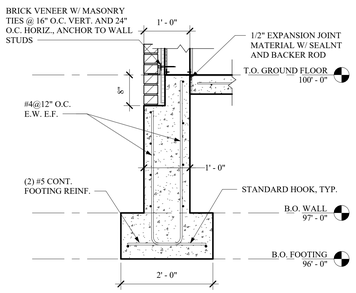

2 S-901 TYP. FOUNDATION WALL DETAIL
SCALE: 3/4" = 1'-0"

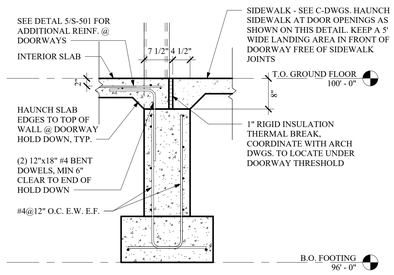

3 S-901 WALL HOLD DOWN DETAIL @ EXTERIOR DOORS (TYP.)
SCALE: 3/4" = 1'-0"

ENGINEERING
33 Airport Center Drive, Suite 202
New Windsor, NY 12553
(845) 567-3100
111 Wheatfield Drive, Suite 1
Milford, PA 18337
(570) 296-2765

BID SET

UDIG·NY SAFE DIGGING STARTS HERE CALL 811

UNAUTHORIZED ADDITION OR ALTERATION OF THIS PLAN IS A VIOLATION OF SECTION 7209(2) OF THE NEW YORK STATE EDUCATION LAW.

ALL PRODUCTION & INTELLECTUAL PROPERTY RIGHTS RESERVED ©

CAESARS LANE WWTP EXPANSION PROJECT
145 CAESARS LN.
NEW WINDSOR, NY 12553

FOR TOWN OF NEW WINDSOR
555 UNION AVE.
NEW WINDSOR, NY 12553

CONTROL BUILDING - FOUNDATION PLAN

REVISIONS

NO.	DESCRIPTION	DATE

ISSUED DATE:	21 NOV, 2024
DESIGNED BY:	WPG/WRB
DRAWN BY:	WRB
CHECKED BY:	JSS
REVIEWED BY:	MJL

SHEET NO.

S-901

PROJECT # 18-732 PHASE # 1

C:\Users\wbowen\Documents\18-732 Caesars Lane WWTP - 09 Control Building - Structural_wbowen640.rvt 11/21/2024 11:52:26 AM

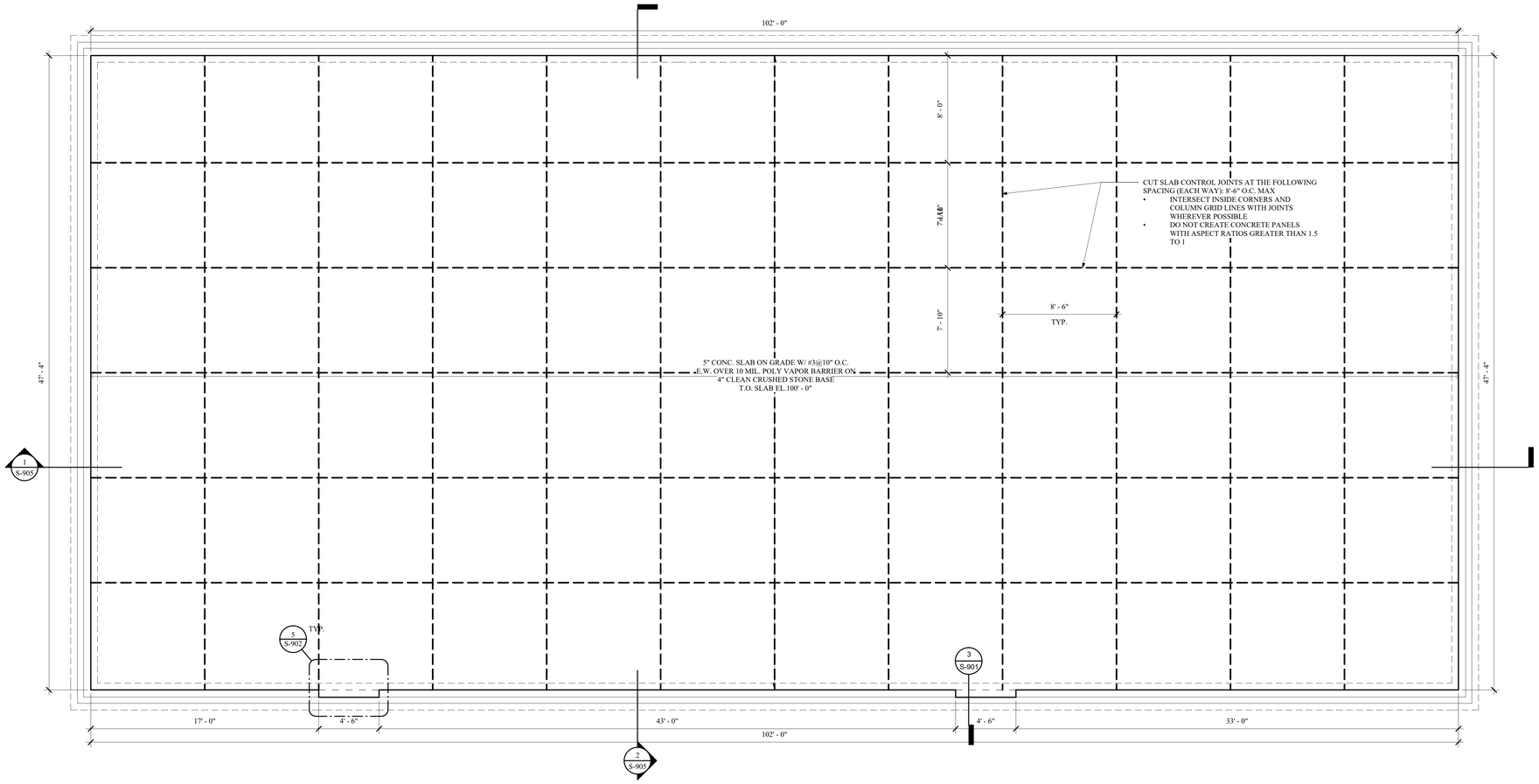

1 S-902 SLAB PLAN
SCALE: 1/4" = 1'-0"

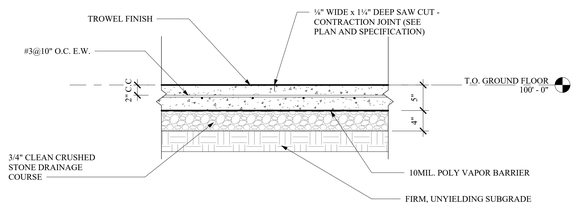

2 S-902 TYP. SLAB DETAIL
SCALE: 1" = 1'-0"

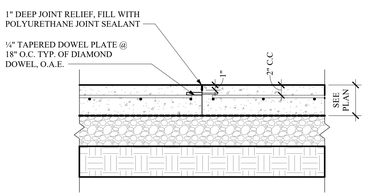

3 S-902 TYP. CONSTRUCTION JOINT DETAIL
SCALE: 1" = 1'-0"

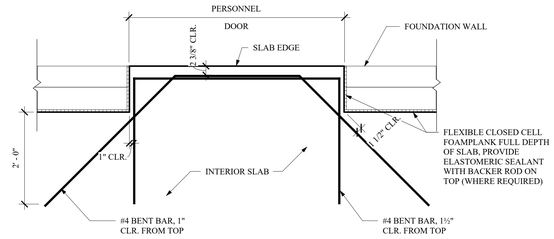

5 S-902 TYP. REINF. DETAIL AT DOORWAYS
SCALE: 3/4" = 1'-0"

ENGINEERING
33 Airport Center Drive, Suite 202
New Windsor, NY 12553
(845) 567-3100
111 Wheatfield Drive, Suite 1
Milford, PA 18337
(570) 296-2765

BID SET

UDIG·NY SAFE DIGGING STARTS HERE CALL 811

UNAUTHORIZED ADDITION OR ALTERATION OF THIS PLAN IS A VIOLATION OF SECTION 7209(2) OF THE NEW YORK STATE EDUCATION LAW.

ALL PRODUCTION & INTELLECTUAL PROPERTY RIGHTS RESERVED ©

CAESARS LANE WWTP EXPANSION PROJECT
145 CAESARS LN.
NEW WINDSOR, NY 12553

FOR TOWN OF NEW WINDSOR
555 UNION AVE.
NEW WINDSOR, NY 12553

CONTROL BUILDING - SLAB PLAN

REVISIONS

NO.	DESCRIPTION	DATE

ISSUED DATE:	21 NOV, 2024
DESIGNED BY:	WPG/WRB
DRAWN BY:	WRB
CHECKED BY:	JSS
REVIEWED BY:	MJL

SHEET NO.
S-902

PROJECT # 18-732 PHASE # 1

C:\Users\wbowers\Documents\18-732 Caesars Lane WWTP - 09 Control Building - Structural_wbowers64.rvt 11/21/2024 11:32:26 AM

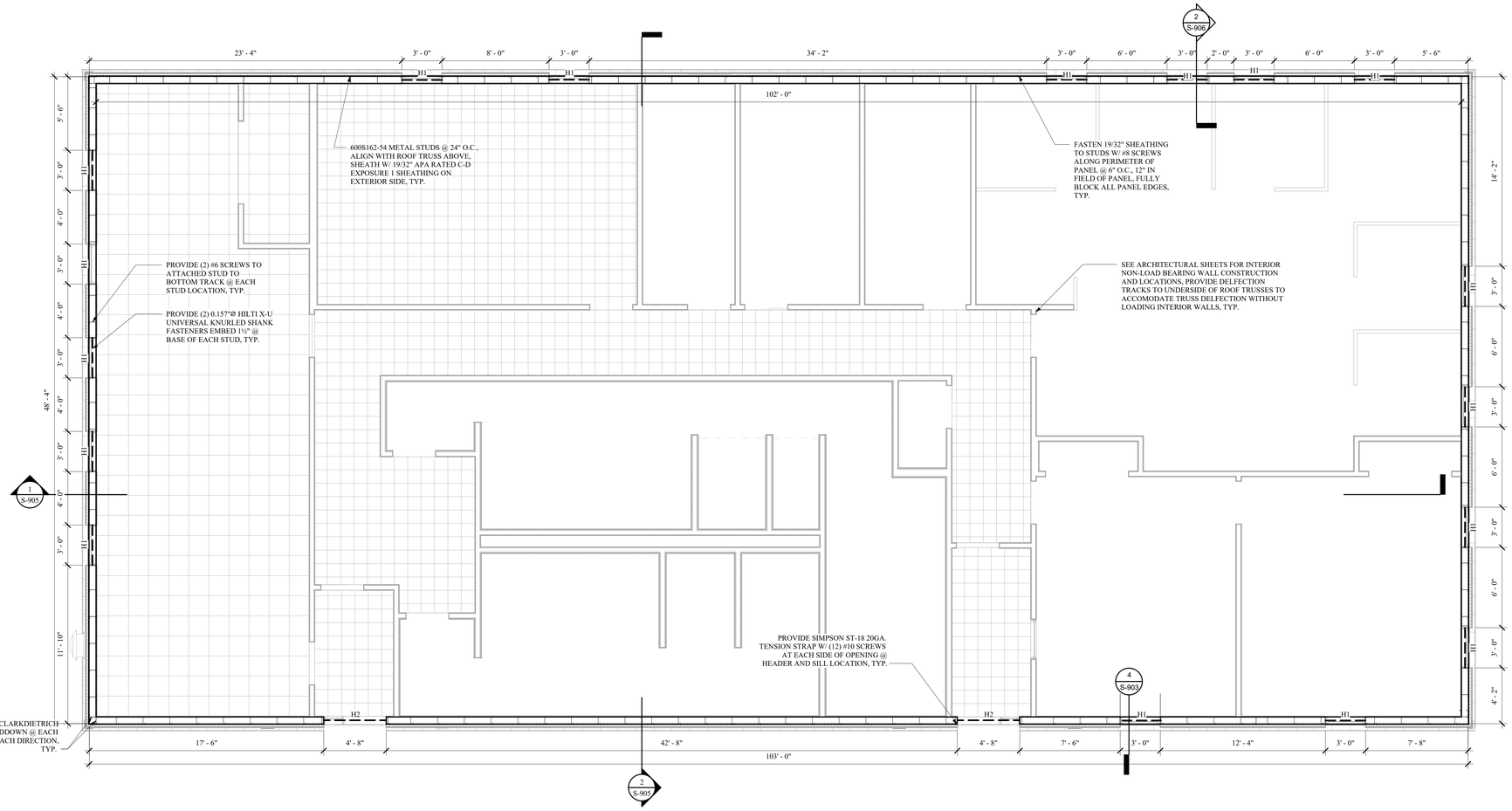

1 S-903 WALL FRAMING PLAN

SCALE: 1/4" = 1'-0"

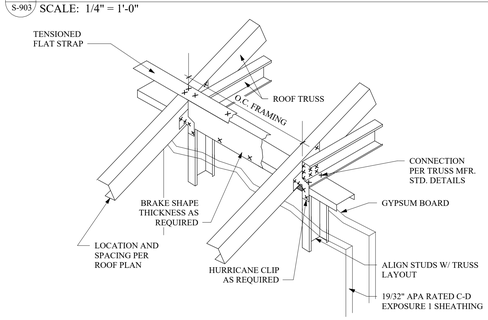

2 S-903 ROOF TRUSS AT EXTERIOR WALL DETAIL

SCALE: N.T.S.

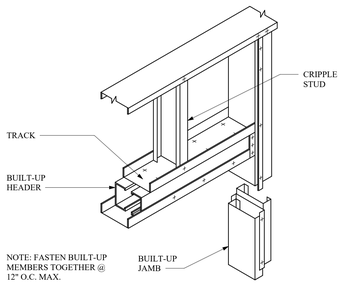

3 S-903 TYP. BOXED HEADER TO JAMB DETAIL

SCALE: N.T.S.

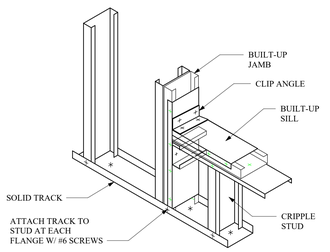

4 S-903 TYP. SILL DETAIL

SCALE: N.T.S.

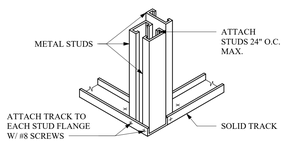

5 S-903 TYP. CORNER DETAIL

SCALE: N.T.S.

BOX HEADER SCHEDULE

TYP. BEARING WALL HEADERS

MARK	LENGTH	SIZE	MATERIAL GUAGE (MIL)	NOTES
H1	3'-0"	(2) 600S162	54	1 JACK STUD, 1 KING STUD, TRACK SHALL BE SAME THICKNESS AS HEADER MEMEBRS, DETAIL 3/S-903
H2	>3'-0"	(2) 600S162	54	2 JACK STUD, 1 KING STUD, TRACK SHALL BE SAME THICKNESS AS HEADER MEMEBRS, DETAIL 3/S-903

6 S-903 HEADER SCHEDULE

SCALE: N.T.S.

PROVIDE HEADERS OVER LOUVERS AND MECHANICAL OPENINGS IN LOAD BEARING WALLS IN ACCORDANCE WITH SCHEDULE

MHE ENGINEERING

33 Airport Center Drive, Suite 202
New Windsor, NY 12553
(845) 567-3100

111 Wheatfield Drive, Suite 1
Milford, PA 18337
(570) 296-2765

BID SET

UDIG·NY SAFE DIGGING STARTS HERE CALL 811

UNAUTHORIZED ADDITION OR ALTERATION OF THIS PLAN IS A VIOLATION OF SECTION 7209(2) OF THE NEW YORK STATE EDUCATION LAW.

ALL PRODUCTION & INTELLECTUAL PROPERTY RIGHTS RESERVED ©

CAESARS LANE WWTP EXPANSION PROJECT
145 CAESARS LN.
NEW WINDSOR, NY 12553

FOR TOWN OF NEW WINDSOR
555 UNION AVE.
NEW WINDSOR, NY 12553

CONTROL BUILDING - WALL FRAMING PLAN

REVISIONS

NO.	DESCRIPTION	DATE

ISSUED DATE:	21 NOV, 2024
DESIGNED BY:	WPG/WRB
DRAWN BY:	WRB
CHECKED BY:	JSS
REVIEWED BY:	MJL

SHEET NO.

S-903

PROJECT # 18-732 PHASE # 1

C:\Users\wbowen\Documents\18-732 Caesars Lane WWTP - 09 Control Building - Structural_wbowen64.rvt 11/21/2024 11:32:27 AM

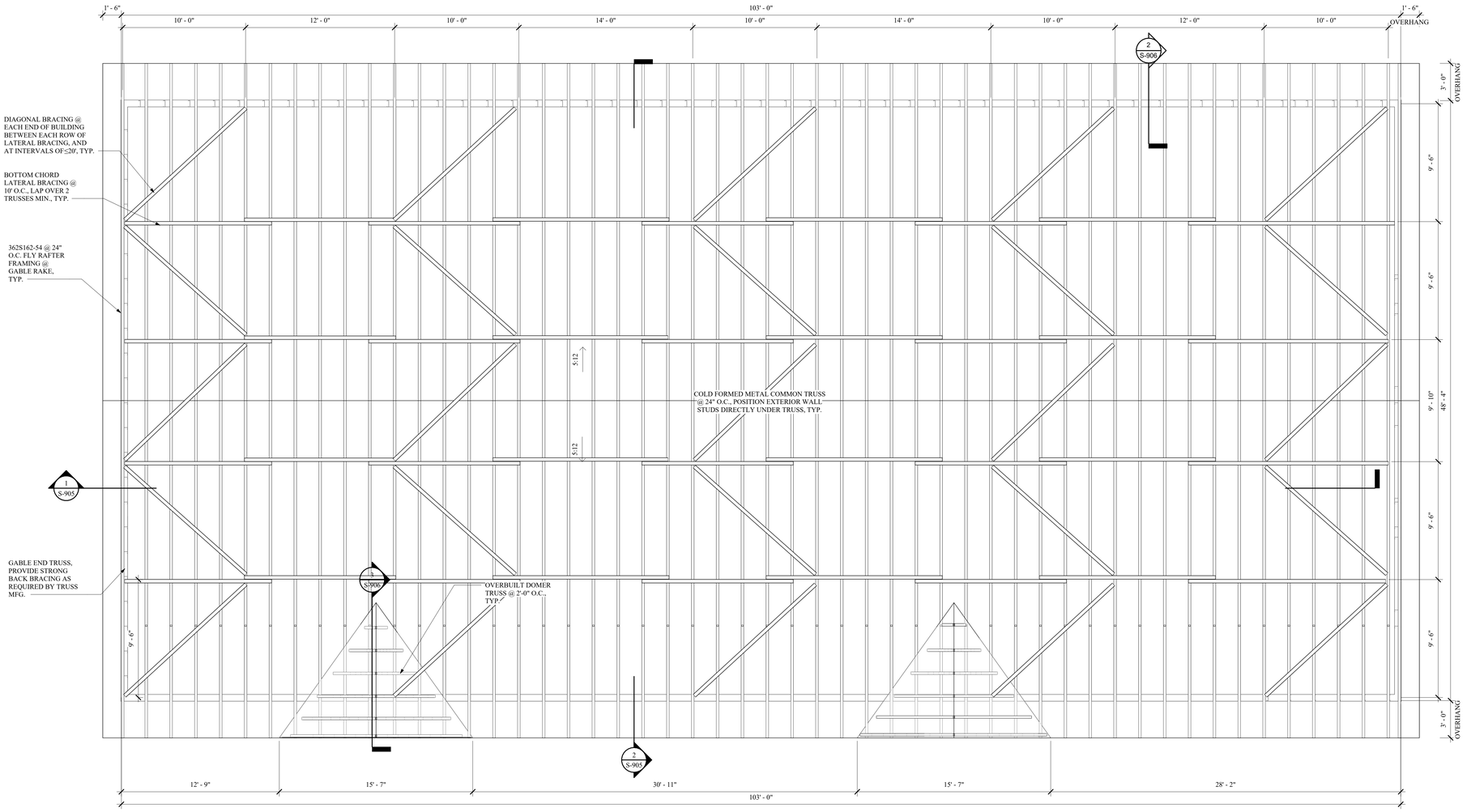

1/S-904 ROOF FRAMING PLAN

SCALE: 1/4" = 1'-0"

NOTES:

1. PROVIDE SIMPOSON H2A HURRICAN TIE @ EACH TRUSS/STUD
2. 19/32" APA RATED C-D EXPOSURE 1SHEATHING SHALL BE FASTENED TO TRUSSES W/ #8 SCREWS @ 6" O.C. AROUND PERIMETER OF PANEL AND 12" O.C. IN FIELD. BLOCK ALL PANEL EDGES.
3. PROVIDE FASTENERS @ 4" O.C. ALONG THE ROOF EAVE AND RIDGE LINES.
4. ROOF OVERHANG DIMENSIONS ARE TO BACK FACE OF FASCIA BOARD.

MHE ENGINEERING

33 Airport Center Drive, Suite 202
New Windsor, NY 12553
(845) 567-3100

111 Wheatfield Drive, Suite 1
Milford, PA 18337
(570) 296-2765

BID SET

UDIG·NY SAFE DIGGING STARTS HERE CALL 811

UNAUTHORIZED ADDITION OR ALTERATION OF THIS PLAN IS A VIOLATION OF SECTION 7209(2) OF THE NEW YORK STATE EDUCATION LAW.

ALL PRODUCTION & INTELLECTUAL PROPERTY RIGHTS RESERVED ©

CAESARS LANE WWTP EXPANSION PROJECT
145 CAESARS LN.
NEW WINDSOR, NY 12553

FOR TOWN OF NEW WINDSOR
555 UNION AVE.
NEW WINDSOR, NY 12553

CONTROL BUILDING - ROOF FRAMING PLAN

REVISIONS

NO.	DESCRIPTION	DATE

ISSUED DATE:	21 NOV, 2024
DESIGNED BY:	WPG/WRB
DRAWN BY:	WRB
CHECKED BY:	JSS
REVIEWED BY:	MJL

SHEET NO.

S-904

PROJECT # 18-732 PHASE # 1

C:\Users\wbower\Documents\18-732 Caesars Lane WWTP - 00 Control Building - Structural_wbower640.rvt 11/21/2024 11:32:59 AM

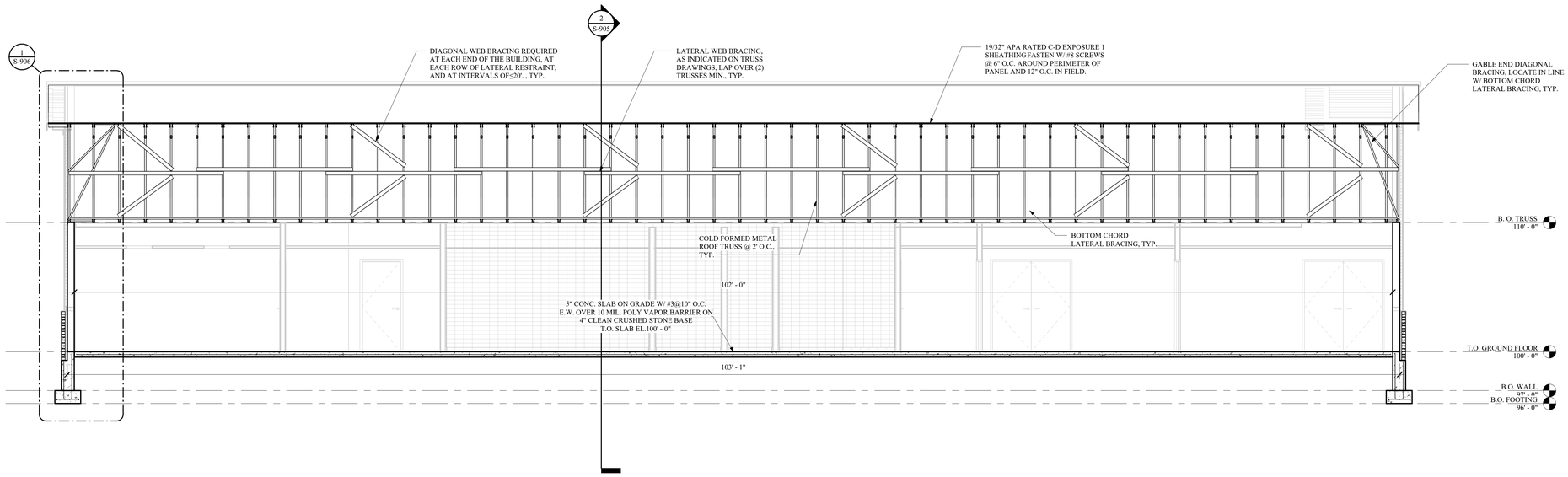

1 S-905 Section 1
SCALE: 1/4" = 1'-0"

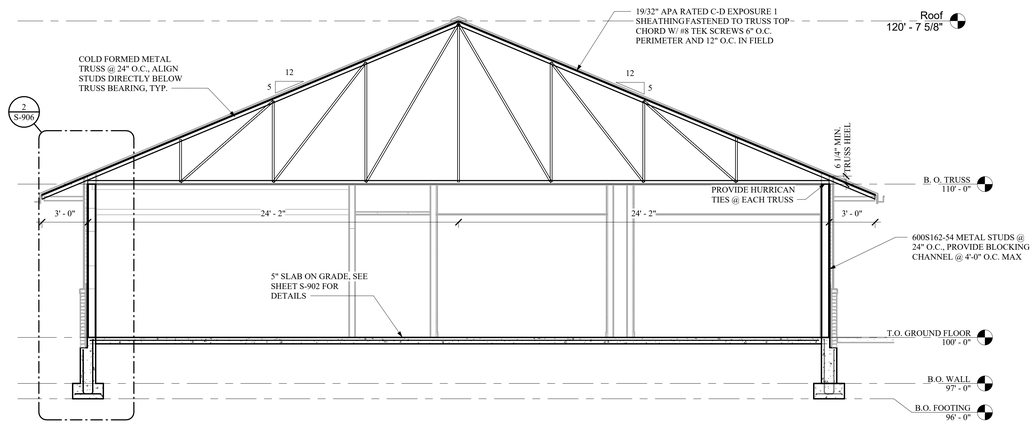

2 S-905 Section 2
SCALE: 1/4" = 1'-0"

MHE ENGINEERING
33 Airport Center Drive, Suite 202
New Windsor, NY 12553
(845) 567-3100
111 Wheatfield Drive, Suite 1
Milford, PA 18337
(570) 296-2765

BID SET

UDIG·NY SAFE DIGGING STARTS HERE CALL 811

UNAUTHORIZED ADDITION OR ALTERATION OF THIS PLAN IS A VIOLATION OF SECTION 7209(2) OF THE NEW YORK STATE EDUCATION LAW.

ALL PRODUCTION & INTELLECTUAL PROPERTY RIGHTS RESERVED ©

CAESARS LANE WWTP EXPANSION PROJECT
145 CAESARS LN.
NEW WINDSOR, NY 12553

FOR TOWN OF NEW WINDSOR
555 UNION AVE.
NEW WINDSOR, NY 12553

CONTROL BUILDING - BUIDLING SECTIONS

REVISIONS

NO.	DESCRIPTION	DATE

ISSUED DATE:	21 NOV, 2024
DESIGNED BY:	WPG/WRB
DRAWN BY:	WRB
CHECKED BY:	JSS
REVIEWED BY:	MJL

SHEET NO.
S-905

PROJECT # 18-732 PHASE # 1

C:\Users\wbowers\Documents\18-732 Caesars Lane WWTP - 09 Control Building - Structural_wbowers64.rvt 11/21/2024 11:32:31 AM

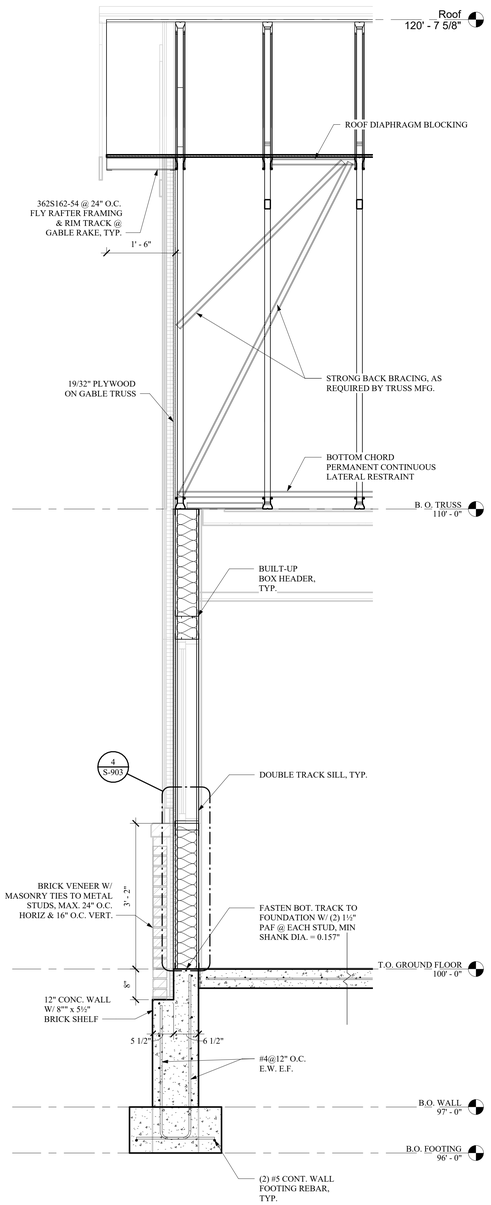

1 S-906 TYP. ENDWALL SECTION
SCALE: 3/4" = 1'-0"

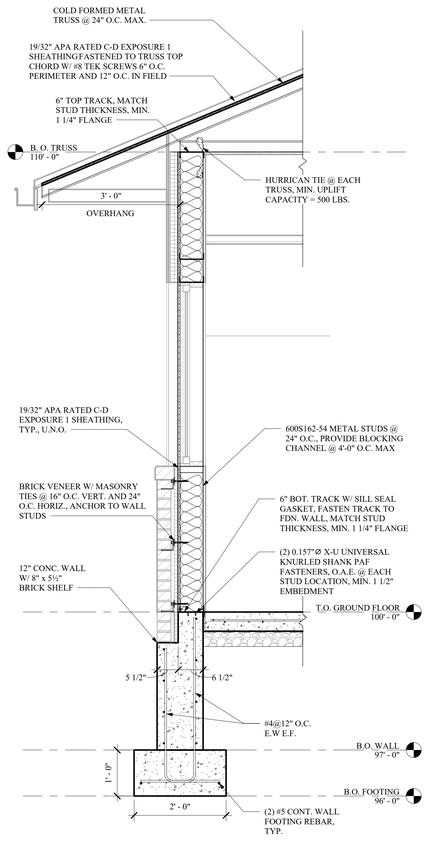

2 S-906 TYP. SIDEWALL SECTION
SCALE: 3/4" = 1'-0"

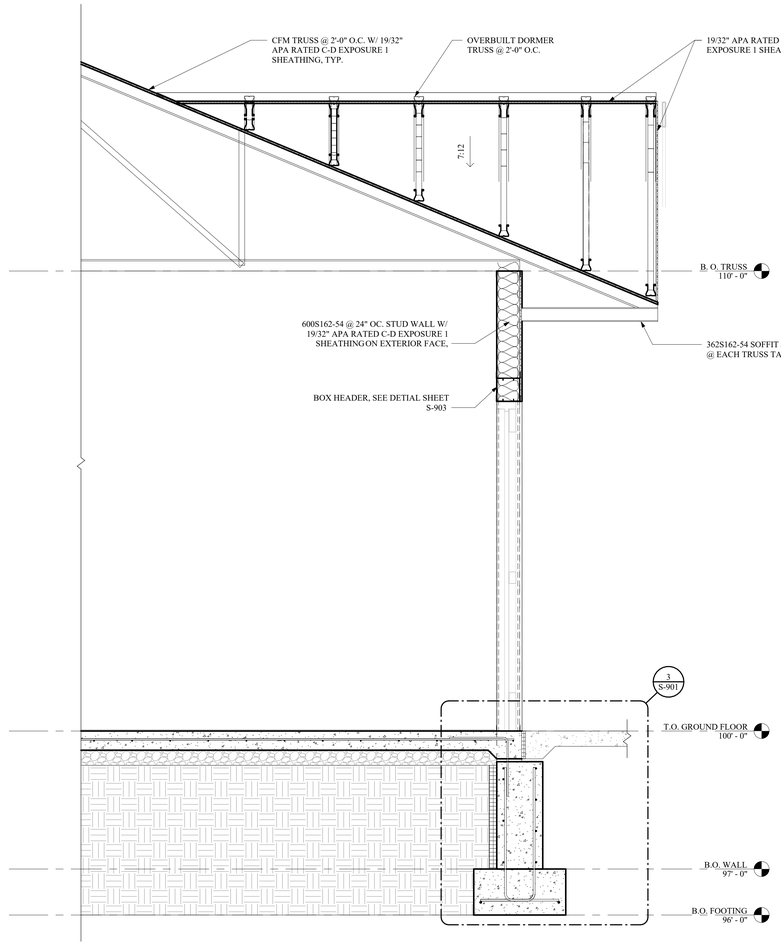

3 S-906 TYP. DORMER SECTION
SCALE: 3/4" = 1'-0"

MHE ENGINEERING
33 Airport Center Drive, Suite 202
New Windsor, NY 12553
(845) 567-3100
111 Wheatfield Drive, Suite 1
Milford, PA 18337
(570) 296-2765

BID SET

UDIG·NY SAFE DIGGING STARTS HERE CALL 811

UNAUTHORIZED ADDITION OR ALTERATION OF THIS PLAN IS A VIOLATION OF SECTION 7209(2) OF THE NEW YORK STATE EDUCATION LAW.

ALL PRODUCTION & INTELLECTUAL PROPERTY RIGHTS RESERVED ©

CAESARS LANE WWTP
EXPANSION PROJECT
145 CAESARS LN.
NEW WINDSOR, NY 12553

FOR TOWN OF NEW WINDSOR
555 UNION AVE.
NEW WINDSOR, NY 12553

CONTROL BUILDING - WALL SECTIONS

REVISIONS

NO.	DESCRIPTION	DATE

ISSUED DATE:	21 NOV, 2024
DESIGNED BY:	WPG/WRB
DRAWN BY:	WRB
CHECKED BY:	JSS
REVIEWED BY:	MJL

SHEET NO.

S-906

PROJECT # 18-732 PHASE # 1

C:\Users\wbower\Documents\18-732 Caesars Lane WWTP - SW Control Building - Structural_wbower64.rvt 11/21/2024 11:32:32 AM

GENERAL NOTES

SYMBOLS AND ABBREVIATIONS
1. THIS SHEET CONTAINS SYMBOLS AND ABBREVIATIONS TYPICALLY SHOWN ON ELECTRICAL DRAWINGS AND SCHEMATICS. THIS CONTRACT DRAWING SET MAY NOT CONTAIN ALL SYMBOLS AND ABBREVIATIONS SHOWN ON THIS SHEET.

UTILITY
1. ELECTRICAL UTILITY COMPANY WHICH SERVES THE SITE IS CENTRAL HUDSON. COORDINATE ALL WORK WITH THE UTILITY AS REQUIRED.

SAFEGUARDS DURING CONSTRUCTION
2. ALL CONSTRUCTION WORK COVERED IN THE UNIFORM CODE, INCLUDING ANY REMOVAL, SHALL COMPLY WITH THE REQUIREMENTS OF CHAPTER 33 OF THE 2020 FCNYS AND CHAPTER 33 OF THE 2020 BCNYS.

PERMITS AND INSPECTIONS
1. OBTAIN ALL REQUIRED PERMITS AND ARRANGE FOR ALL REQUIRED INSPECTIONS IN ACCORDANCE WITH STATE AND LOCAL GOVERNING AUTHORITIES.
2. COMPLETE WORK IN ACCORDANCE WITH THE 2017 NEC, AND STATE AND LOCAL GOVERNING REGULATIONS.
3. PERFORM WORK AS REQUIRED BY CODES, REGULATIONS, LAWS OF LOCAL, STATE AND FEDERAL GOVERNMENTS, AND OTHER AUTHORITIES WITH LAWFUL JURISDICTION. ALL MATERIAL AND EQUIPMENT SHALL BE UL LISTED.

SCOPE
1. UNLESS OTHERWISE INDICATED, PROVIDE A COMPLETE AND OPERATIONAL ELECTRICAL SYSTEM INCLUDING ALL NECESSARY MATERIAL, LABOR, AND EQUIPMENT.
2. ALL DISCONNECTS REQUIRED BY CODE MAY NOT BE SHOWN. CONTRACTOR SHALL PROVIDE ALL NECESSARY DISCONNECTS PER 2017 NEC.
3. ALL EQUIPMENT AND MATERIAL SHALL BE LABELED AND LISTED, AND INSTALLED IN ACCORDANCE WITH THEIR LISTING.
4. PROVIDE ELECTRICAL CONNECTION FOR EVERY FIXTURE, OR ITEM OF EQUIPMENT REQUIRING SAME, WHICH IS SHOWN OR LISTED ON ANY CONTRACT DRAWING.
5. CONTRACTOR SHALL PROVIDE NECESSARY SUPPORT FRAMING, STIFFENERS, BRACING, AND HANGERS WHETHER SHOWN OR NOT TO ENSURE A COMPLETE AND DURABLE SYSTEM. SUPPORT FRAMING CONNECTIONS SHALL BE WELDED UNLESS SPECIFICALLY SHOWN OTHERWISE. ACTUAL SUPPORTS MAY VARY FROM THOSE SHOWN IN DETAILS TO ACCOMMODATE EXISTING FIELD CONDITIONS.
6. THE WORK INCLUDED IN THIS CONTRACT ENCOMPASSES THE DRAWINGS AND SPECIFICATIONS. WORK INCLUDED ON THE DRAWINGS ONLY, OR IN THE SPECIFICATIONS ONLY, SHALL BE INCORPORATED AS IF INCLUDED IN BOTH. ALL SYSTEMS SHOWN ARE INTENDED TO BE COMPLETE AND FULLY FUNCTIONING. THE CONTRACTOR SHALL PROVIDE SUCH COMPONENTS AS NECESSARY FOR A FULLY FUNCTIONING SYSTEM.
7. ALL EQUIPMENT SHALL BE INSTALLED IN A NEAT AND WORKMANLIKE MANNER, RECTILINEAR TO BUILDING STRUCTURE.
8. FIELD VERIFY ALL SITE CONDITIONS AND DIMENSIONS PRIOR TO COMMENCEMENT OF ANY WORK OR SHOP FABRICATION. REPORT ANY DISCREPANCIES TO THE OWNER/ENGINEER IN WRITING, PRIOR TO COMMENCEMENT OF ANY WORK.

COORDINATION OF WORK
1. COORDINATE AND VERIFY THAT WORKING AND DEDICATED EQUIPMENT SPACE REQUIREMENTS ARE MET PER NEC.
2. FIELD LOCATE ALL CORE DRILL LOCATIONS.
3. BEFORE CUTTING OR DRILLING INTO BUILDING ELEMENTS INSPECT AND LAYOUT WORK TO AVOID DAMAGING STRUCTURAL ELEMENTS AND BUILDING UTILITIES.
4. BEFORE SELECTING MATERIAL/EQUIPMENT AND PROCEEDING WITH WORK, INSPECT AREAS WHERE MATERIAL AND EQUIPMENT ARE TO BE INSTALLED TO ENSURE SUITABILITY, AND CHECK NEEDED SPACE FOR PLACEMENT, CLEARANCES AND INTERCONNECTIONS.
5. POSSIBLE SYSTEM SHUT-DOWNS AND WORK AREAS CLOSURES MUST BE COORDINATED WELL IN ADVANCE WITH THE OWNER.
6. VERIFY RECEPTACLE, SWITCH, & COVER PLATE COLORS WITH THE OWNER.
7. TURN OVER TO THE OWNER ALL MANUFACTURER'S WARRANTIES FOR EQUIPMENT AND MATERIALS PROVIDED.
8. COORDINATE ANY REQUIRED CONTRACTOR STAGING AREA WITH THE OWNER.

DEFINITIONS
1. THE DEFINITION OF ELECTRICAL TERMS USED SHALL BE AS DEFINED IN THE 2017 EDITION OF THE NATIONAL ELECTRICAL CODE (NEC) AS REFERENCED IN THE BUILDING CODE OF NEW YORK STATE.
2. THE TERM "INDICATED" SHALL MEAN "AS SHOWN ON CONTRACT DOCUMENTS (SPECIFICATIONS, DRAWINGS, AND RELATED ATTACHMENTS)".
3. THE TERM "PROVIDE" SHALL MEAN "TO FURNISH, INSTALL, AND CONNECT COMPLETELY".
4. THE TERM "SIZE" SHALL MEAN ONE OR MORE OF THE FOLLOWING: "LENGTH, CURRENT AND VOLTAGE RATING, NUMBER OF POLES, NEMA SIZE, AND OTHER SIMILAR ELECTRICAL CHARACTERISTICS".

PLANS
1. ELECTRICAL PLANS, DETAILS, AND ONE LINE DIAGRAMS SHOW THE GENERAL LOCATION AND ARRANGEMENT OF THE ELECTRICAL SYSTEM. THEY ARE DIAGRAMMATIC AND DO NOT SHOW ALL CONDUIT BODIES, CONNECTORS, BENDS, FITTINGS, HANGERS, AND ADDITIONAL PULL BOXES WHICH THE CONTRACTOR MUST PROVIDE TO COMPLETE THE ELECTRICAL SYSTEM.
2. ELECTRICAL PLANS AND DETAILS DO NOT SHOW ALL INTERFERENCES AND CONDITIONS, VISIBLE AND/OR HIDDEN, THAT MAY EXIST. CONTRACTOR MUST INSPECT AND SURVEY THE SPACE BEFORE PERFORMING THE WORK.
3. THESE DRAWINGS ARE SCHEMATIC IN NATURE AND REPRESENT A COMPLETED PROJECT. MINOR MODIFICATIONS OF WORK SHALL BE PROVIDED BY THE CONTRACTOR TO COMPLY WITH PROJECT REQUIREMENTS, LOCATIONS OF DEVICES AND EQUIPMENT SHOW A GENERAL ARRANGEMENT AND INTENDED FUNCTION. ALL COMPONENTS SHOWN ON THE RISER DIAGRAMS, BUT NOT ON THE PLAN OR VICE VERSA, SHALL BE INCLUDED AS IF SHOWN ON BOTH. EXACT LOCATION OF MECHANICAL EQUIPMENT THAT REQUIRE ELECTRICAL CONNECTIONS ARE SHOWN ON THE MECHANICAL DRAWINGS. BEFORE INSTALLATION OF WORK, CHECK FOR SWINGS AND ALL REQUIRED CLEARANCES, TO AVOID INTERFERENCE WITH OTHER TRADES. COORDINATE WITH ALL CONTRACT DOCUMENTS, SHOP DRAWINGS AND EQUIPMENT DRAWINGS. THE CONTRACTOR IS RESPONSIBLE FOR OBTAINING ALL REQUIRED CONTRACT DRAWINGS.

METHODS
1. CORE DRILL ALL THRU WALL & THRU FLOOR PENETRATIONS. ALL THRU FLOOR CONDUIT PENETRATIONS TO BE PROPERLY SEALED TO ELIMINATE POTENTIAL FOR WATER TO ENTER CONDUIT SYSTEM OR PASS THRU FLOOR PENETRATION.
2. ALL EXTERIOR CONDUITS TO HAVE DUCT SEAL INSTALLED AT ALL ENDS, BOXES, WEATHERHEADS, PENETRATIONS TO INTERIOR SPACES, ETC.
3. DUCT BANKS SHALL NOT BE ROUTED DIRECTLY ABOVE OR BELOW EXISTING/NEW UTILITIES EXCEPT WHEN CROSSING. WHERE CROSSING EXISTING OR NEW UTILITY DUCT BANKS SHALL CROSS AT 90 DEGREE ANGLES.
4. ALL CONDUIT SYSTEMS EXPOSED TO TEMPERATURE DIFFERENTIALS, IN POTENTIAL CONDENSING ATMOSPHERES, EXTERIOR INSTALLED, OR INSTALLED UNDERGROUND SHALL HAVE PROVISIONS FOR DRAINING WATER OUT OF CONDUIT SYSTEMS.
5. WHERE WIRE SIZE IS NOT NOTED ON DRAWINGS, CONTRACTOR SHALL SIZE ACCORDING TO THE NEC AND SHALL ADHERE TO THE FOLLOWING CRITERIA:
   - EQUIPMENT CIRCUITS AND FEEDERS LESS THAN OR EQUAL TO 100A SHALL BE SIZED USING THE 60°C COPPER AMPACITY COLUMN (NEC T.310.16).
   - EQUIPMENT CIRCUITS AND FEEDERS GREATER THAN 100A SHALL BE SIZED USING THE 75°C COPPER AMPACITY COLUMN (NEC T.310.16). MINIMUM WIRE SIZE SHALL BE #12 THHN/THWN.
   - ALUMINUM SHALL NOT BE USED. CONDUCTORS SHALL BE STRANDED.
6. FASTENERS ON THE UNDERSIDE OF PRECAST/PRESTRESSED CONCRETE MEMBERS (PLANKS OR DOUBLE TEES) WHICH SERVE FOR DIRECT ATTACHMENT FOR HANGERS OF CONDUIT, ELECTRICAL EQUIPMENT, ETC., MAY NOT BE DRILLED-IN OR SHOT-IN IN THE VICINITY OF THE PRESTRESSING TENDONS. THIS MEANS THAT THE FASTENERS AT THE CONCRETE PLANKS CAN BE PLACED ONLY AT THE JOINT BETWEEN UNITS (UNITS ARE APPROXIMATELY 40" WIDE). ANY INTERMEDIATE SUPPORTS NEEDED TO ACCOMPLISH THIS SHALL BE PROVIDED BY THE CONTRACTOR. AT DOUBLE TEES, ATTACHMENT TO THE FLANGES IS ALLOWED. HOWEVER, BECAUSE OF THEIR THIN CROSS SECTIONS, HEAVY LOADS MUST BE CARRIED BY THROUGH-BOLTS WHICH MUST BE INSTALLED BEFORE THE ROOFING IS APPLIED.

UNDERGROUND UTILITIES
1. UNDERGROUND UTILITY LOCATIONS ARE NOT GUARANTEED, NOR IS THERE ANY GUARANTEE THAT ALL EXISTING UTILITIES WHETHER FUNCTIONAL OR ABANDONED WITHIN THE PROJECT AREA ARE SHOWN ON THESE DRAWINGS.
2. THE CONTRACTOR SHALL DETERMINE THE EXACT LOCATION OF ALL UNDERGROUND UTILITIES BEFORE BEGINNING WORK & SHALL BE RESPONSIBLE FOR ALL DAMAGE RESULTING FROM HIS/HER WORK.
3. THE CONTRACTOR SHALL NOTIFY "DIG SAFELY NEW YORK" 1-800-962-7962 PRIOR TO ANY EXCAVATION.
4. NO ATTEMPT WAS MADE TO LOCATE SUBSURFACE STRUCTURES, ABOVEGROUND STRUCTURES AND/OR UTILITIES BELIEVED TO EXIST IN THE WORKING AREA. IT SHALL BE THE CONTRACTOR'S RESPONSIBILITY TO LOCATE EXISTING UTILITIES NEEDED TO COMPLETE THE WORK AND IT SHALL BE HIS RESPONSIBILITY TO PROCEED WITH GREAT CARE IN EXECUTING ANY WORK. CONTRACTOR SHALL COMPLY WITH THE STATE OF NEW YORK DEPARTMENT OF PUBLIC SERVICE, 16NYCRR PART 753.
5. THE OWNER/ENGINEER SHALL BE NOTIFIED IN WRITING OF ANY CONDITIONS THAT VARY FROM THOSE SHOWN ON THE PLANS. THE CONTRACTOR'S WORK SHALL NOT VARY FROM THE PLANS WITHOUT THE EXPRESSED APPROVAL OF THE OWNER/ENGINEER.
6. CONTRACTOR SHALL PROTECT ALL EXISTING STORM WATER DRAINAGE FACILITIES, INCLUDING PIPES, DRAINAGE STRUCTURES, SWALES, DITCHES, ETC. CONTRACTOR SHALL REPLACE AND RESTORE ANY AND ALL OF THESE FACILITIES, AFFECTED BY CONSTRUCTION ACTIVITIES, AT NO ADDITIONAL COST TO THE OWNER/ENGINEER.
7. CONTRACTOR SHALL BE RESPONSIBLE FOR PROTECTING EXISTING UTILITIES DURING OPERATIONS.
8. THE CONTRACTOR SHALL BE RESPONSIBLE FOR RESTORING ANY SURVEY OR RIGHT-OF-WAY MONUMENTS DISTURBED DURING CONSTRUCTION. THE CONTRACTOR SHALL EMPLOY A LICENSED LAND SURVEYOR TO RESTORE ALL DISTURBED MONUMENTS TO THEIR ORIGINAL LOCATION.
9. RESTORE ALL SURFACES TO AS GOOD OR BETTER CONDITION THAN BEFORE CONSTRUCTION AS SOON AS POSSIBLE FOLLOWING COMPLETION OF WORK IN ANY AREA.
10. THE CONTRACTOR SHALL BECOME FAMILIAR WITH SITE CONDITIONS AND SHALL INCLUDE PROVISIONS TO AVOID CONFLICTS WITH AND/OR RESTORE SITE FEATURES IN THE BID.
11. ALL SUITABLE EXCAVATED MATERIAL SHALL BE REUSED ON SITE AND BE SUITABLY STABILIZED SO THAT IT CANNOT REASONABLY RE-ENTER ANY BODY OF WATER.
12. ALL EXCAVATION SHALL BE CONDUCTED IN ACCORDANCE WITH OSHA STANDARDS, LOCAL REGULATIONS, STATE REGULATIONS, AND FEDERAL REGULATIONS.

GENERAL NOTATION

DRAWING NOTATION

- SOLID & LIGHT INDICATES EXISTING EQUIPMENT TO REMAIN.
- HEAVY & SOLID INDICATES EQUIPMENT TO BE PROVIDED BY THIS CONTRACT.
- DB-XX — DESIGNATION FOR UNDERGROUND ELECTRICAL DUCT BANK.

TEXT ADJACENT TO EQUIPMENT IS SOMETIMES ADDED FOR EXTRA CLARIFICATION ON REMOVAL/EXISTING TO REMAIN ITEMS. REFER TO LIST BELOW FOR DEFINITIONS.

ETR	EXISTING EQUIPMENT TO REMAIN.
UGE	UNDERGROUND ELECTRIC (SAND FILL)
	UNDERGROUND ELECTRIC (REINFORCED CONCRETE)
OHE	OVERHEAD ELECTRIC

POWER EQUIPMENT

- POWER TRANSFORMER
- PT — POTENTIAL TRANSFORMER
- CT — CURRENT TRANSFORMER
- FUSE
- **AF / **AT — MOLDED CASE CIRCUIT BREAKER "AF" INDICATES AMPERE FRAME SIZE "AT" INDICATES AMPERE TRIP SETTINGS
- 400AF / 300AT — FUSED DISCONNECT "400AF" INDICATES AMPERE SWITCH SIZE "300AT" INDICATES AMPERE FUSE SIZE
- 200A — DISCONNECT SWITCH (NON-FUSED) "200A" INDICATES AMPERE SWITCH SIZE
- SYSTEM GROUND OR EQUIPMENT GROUND
- CONTACTOR (NORMALLY OPEN)
- CONTACTOR (NORMALLY CLOSED)

SINGLE LINE DIAGRAM

- PANELBOARD WITH MAIN CIRCUIT BREAKER
- PANELBOARD WITH MAIN LUGS ONLY
- EMERGENCY GENERATOR
- METER
- ATS / MTS
- ACROSS-THE-LINE STARTER (AXL)
- CONDUIT BUSHING
- CONTROL DEVICE/INSTRUMENT
- FLEX CONNECTION
- VARIABLE FREQUENCY DRIVE (VFD)
- THRU WALL WATERTIGHT PENETRATION
- SPD — SURGE SUPPRESSION DEVICE
- KWHD — POWER METER

FLOOR PLAN

- SURFACE MTD BRANCH CIRCUIT PANELBOARD.
- JB — JUNCTION AND/OR PULL BOX
- ELECTRICAL CONNECTION AS DEFINED IN EQUIPMENT CONNECTION SCHEDULE.
- HP — EXISTING ELECTRICAL CONNECTION. ('HP' DENOTES HORSEPOWER.)
- LOCAL PUSH BUTTON/ CONTROL STATION
- UTILITY POLE
- DATA DROP

CIRCUITING LEGEND

CIRCUITING

- LP2A-1,3,5 — HOMERUN TO PANEL "LP2A". CIRCUITS #1,3,5 (VIA 20A-3P C/B). PROVIDE INSULATED GROUND CONDUCTOR IN ACCORDANCE WITH SPECIFICATIONS. NUMBER OF CIRCUITS INDICATED BY QUANTITY OF ARROW HEADS
- L2PA-2 — HOMERUN TO PANEL "L2PA" VIA 20A/1P CKT BKR. SEE BELOW PARAGRAPH 'HASH MARKS' FOR CONDUCTOR SIZING.
- HASH MARKS INDICATE QUANTITY OF #12 AWG COPPER CONDUCTORS IN CONDUIT. WHEN NO HASH MARKS ARE INDICATED, CONDUIT SHALL CONTAIN (2) #12 WIRES AND #12 GROUND WIRE. ASSUME 3/4" DIAMETER CONDUIT, UNLESS OTHERWISE NOTED
  EXAMPLE SHOWN AT LEFT INDICATES 2 HOT (SHORT LINES), 2 NEUTRAL (LONG LINES), AND 1 GROUND WIRES (LONG LINE WITH TAIL).

NOTE
CONDUCTORS REQUIRED FOR LUMINAIRE SWITCHING ARE NOT ACCOUNTED FOR ON THE PLANS USING HASH MARKS. CONTRACTOR SHALL INCLUDE ANY NECESSARY CONDUCTORS REQUIRED FOR SWITCHING IN BID. SWITCHING DESIGNATIONS (LOWER CASE LETTERS) ARE SHOWN TO ILLUSTRATE SWITCHING INTENT.

CIRCUIT ROUTING SHOWN ON DRAWINGS SHALL BE CONSIDERED DIAGRAMMATIC ONLY. CONTRACTOR SHALL PROVIDE NECESSARY OFFSETS AND ROUTE FEEDERS AFTER HAVING CONSIDERED ALL FIELD OBSTACLES

WIRING DEVICES

RECEPTACLES

1. FACEPLATE COLOR - COORDINATE WITH OWNER
2. DEVICE COLOR - COORDINATE WITH OWNER

- # — 125 VOLT, 2 POLE, 3 WIRE, 20 AMP, HEAVY DUTY DUPLEX RECEPTACLE, MOUNTING HEIGHT 18" AFF (UON).
- # — 125 VOLT, 2 POLE, 3 WIRE, 20 AMP, HEAVY DUTY DUPLEX RECEPTACLE MOUNTED ABOVE COUNTER (UON).

TEXT ADJACENT TO RECEPTACLES INDICATES CONFIGURATION OR ACCESSORIES. REFER TO LIST BELOW FOR DEFINITIONS.

#	INDICATES PANELBOARD CIRCUIT TO WHICH RECEPTACLE SHALL BE CIRCUITED. REFER TO HOMERUN FOR PANELBOARD DESIGNATION.
WP	EXTERIOR RECEPTACLES SUBJECT TO DAMP ENVIRONMENTS SHALL HAVE WEATHER-PROOF-IN-USE BUBBLE COVER WITH PADLOCK CAPABILITY. WEATHER-PROOF RECEPTACLES ARE TO HAVE INTEGRAL GFI PROTECTION (SEE BELOW)
GFI	RECEPTACLE EQUIPPED WITH INTEGRAL GROUND FAULT CIRCUIT INTERRUPTER
DED	DEDICATED RECEPTACLE.

SWITCHES

1. FACEPLATE COLOR - COORDINATE WITH OWNER
2. DEVICE COLOR - COORDINATE WITH OWNER

- $ — REFER TO SWITCH TAG SCHEDULE

TEXT ADJACENT TO SWITCH INDICATES SPECIAL CONFIGURATION OR ACCESSORIES. REFER TO LIST BELOW FOR DEFINITIONS.

a,b	LOWER CASE LETTER INDICATES SWITCH DESIGNATION.
3,4	INDICATES A 3-WAY OR 4-WAY SWITCH.
WP	EXTERIOR SWITCHES SUBJECT TO DAMP ENVIRONMENTS SHALL HAVE WEATHER-PROOF-IN-USE BUBLE COVER WITH PADLOCK CAPABILITY.
M	MOTOR RATED SNAP SWITCH WITH OVERLOADS. CONTRACTOR SHALL SIZE SWITCH AND OVERLOADS BASED ON ACTUAL NAMEPLATE DATA OF EQUIPMENT SUPPLIED/PURCHASED.
D	DIMMING SWITCH (SLIDER TYPE). SWITCH SHALL BE COMPATIBLE WITH INSTALLED FIXTURES. PROVIDE WITH MANUAL "ON/OFF" CONTROL OF LIGHTING FIXTURES CONTROLLED.

GENERAL ABBREVIATIONS

A	AMPERES	GF	GROUND FAULT	OEM	ORIGINAL EQUIPMENT MANUFACTURER
AFF	ABOVE FINISH FLOOR	GFCI,GFI	GROUND-FAULT CIRCUIT INTERRUPTER	OHE	OVERHEAD ELECTRIC
AFG	ABOVE FINISH GRADE	GND,G	GROUND OR GROUNDING	OIU	OPERATOR INTERFACE UNIT
AHJ	AUTHORITY HAVING JURISDICTION				
AIC	AMPERE INTERRUPTING CAPACITY	HH	HANDHOLE	P	POLE
AL	ALUMINUM	HMI	HUMAN MACHINE INTERFACE	PH	PHASE
APPROX	APPROXIMATELY	HOA	HAND, OFF, AUTOMATIC SWITCH	PLC	PROGRAMMABLE LOGIC CONTROLLER
ATS	AUTOMATIC TRANSFER SWITCH	HP	HORSEPOWER	PVC	POLYVINYL CHLORIDE
AWG	AMERICAN WIRE GAUGE	HVAC	HEATING, VENTILATING, & AIR CONDITIONING		
AXL	ACROSS THE LINE STARTER			QTY	QUANTITY
BCNYS	NEW YORK STATE BUILDING CODE	IBC	INTERNATIONAL BUILDING CODE	REQ'D	REQUIRED
BLDG	BUILDING	IFC	INTERNATIONAL FIRE CODE	RGS	RIGID GALVANIZED STEEL
BOD	BASIS OF DESIGN	INST	INSTALLED	RMC	RIGID METAL CONDUIT
C	CONDUIT	JB	JUNCTION BOX	SE	SERVICE ENTRANCE RATED
CB	CIRCUIT BREAKER			SLD	SINGLE LINE DIAGRAM
CKT	CIRCUIT	KCMIL	THOUSAND CIRCULAR MILS	SP	SPARE
CL	CENTERLINE	KVA	KILOVOLT AMPERES	SPD	SURGE PROTECTIVE DEVICE
CLF	CURRENT LIMITING FUSE	KW	KILOWATTS	STP	SHIELDED TWISTED PAIR
CONT	CONTRACT				
CP	CONTROL PANEL	LCS	LOCAL CONTROL STATION	TBR	TO BE REMOVED
CPT	CONTROL POWER TRANSFORMER	LFMC	LIQUID TIGHT FLEXIBLE METAL CONDUIT	TSTAT	THERMOSTAT
CT	CURRENT TRANSFORMER	LPS	LIGHTNING PROTECTION SYSTEM	TYP	TYPICAL
CU	COPPER	LSLL	LOW LOW LEVEL FLOAT SWITCH		
		LTG	LIGHTING	UGE	UNDERGROUND ELECTRIC
DB	DUCT BANK	LVT	LINE VOLTAGE THERMOSTAT	UOI	UNLESS OTHERWISE INDICATED
DISC	DISCONNECT			UON	UNLESS OTHERWISE NOTED
DWG	DRAWING	MCC	MOTOR CONTROL CENTER	UPS	UNINTERRUPTIBLE POWER SUPPLY
		MCB	MAIN CIRCUIT BREAKER		
EC	ELECTRICAL CONTRACTOR	MCP	MOTOR CIRCUIT PROTECTOR	V	VOLT
ECS	EQUIPMENT CONNECTION SCHEDULE	MDP	MAIN DISTRIBUTION PANELBOARD	VFD	VARIABLE FREQUENCY DRIVE
EGS	EMERGENCY GENERATOR SYSTEM	MFG	MANUFACTURER		
EM	EMERGENCY	MIN	MINIMUM	W	WIRE
EMT	ELECTRICAL METALLIC TUBING	MLO	MAIN LUGS ONLY	WP	WEATHER PROOF RATED DEVICE
ETR	EXISTING TO REMAIN	MS	MOTOR STARTER	WWTP	WASTE WATER TREATMENT PLANT
		MTS	MANUAL TRANSFER SWITCH		
FCNYS	NEW YORK STATE FIRE CODE			XFMR	TRANSFORMER
FC	FOOT CANDLE	NC	NORMALLY CLOSED		
FLA	FULL LOAD AMPERES	NEC	NATIONAL ELECTRICAL CODE	Δ	DELTA
FMC	FLEXIBLE METAL CONDUIT	NEMA	NAT'L ELECTRICAL MANUFACTURER'S ASSOC.	Y	WYE
FRAC	FRACTIONAL	NESC	NATIONAL ELECTRICAL SAFETY CODE	ϕ	PHASE
FT	FEET	NF	NON FUSED		
FURN	FURNISHED	NIC	NOT IN CONTRACT		
FVR	FULL VOLTAGE REVERSING STARTER	NP	NAME PLATE		
FVNR	FULL VOLTAGE NON-REVERSING STARTER	NTS	NOT TO SCALE		
GC	GENERAL CONTRACTOR	OC	ON CENTER		

LIGHTING

LIGHT FIXTURES

- 'A' — UPPER CASE LETTER INDICATES FIXTURE TYPE (REFER TO LUMINAIRE SCHEDULE)
- 'a' — LOWER CASE LETTER INDICATES SWITCH CONTROL. WHERE NO SWITCH CONTROL DESIGNATION IS PROVIDED, CONTROL SHALL BE VIA MASTER ROOM SWITCH OR MASTER ROOM OCCUPANCY SENSOR (WHERE PROVIDED).
- '#' — INDICATES PANELBOARD CIRCUIT TO WHICH FIXTURE SHALL BE CIRCUITED.

WHEN A LIGHT FIXTURE IS HALF SHADED THAT IS INDICATION THE FIXTURE CONTAINS AN EMERGENCY BATTERY BACKUP OPTION. REFER TO LUMINAIRE SCHEDULE.

EXIT & EGRESS

- CEILING-MOUNTED ILLUMINATED "EXIT" SIGN LIGHTING FIXTURE.
- WALL-MOUNTED ILLUMINATED "EXIT" SIGN LIGHTING FIXTURE.

NOTE: ARROWS INDICATE DIRECTION OF EGRESS.

EXIT SIGNS SHALL BE INSTALLED 8'-6" AFF. PROVIDE PENDANTS AS REQUIRED BY ROOM CEILING/STRUCTURE HEIGHT.

BUILDING CODE NOTE

TO THE BEST OF THE REGISTERED DESIGN PROFESSIONAL'S KNOWLEDGE, BELIEF AND PROFESSIONAL JUDGEMENT, THESE PLANS AND/OR SPECIFICATIONS ARE IN COMPLIANCE WITH THE 2020 UNIFORM CODE.

ENERGY CODE NOTE

TO THE BEST OF THE REGISTERED DESIGN PROFESSIONAL'S KNOWLEDGE, BELIEF AND PROFESSIONAL JUDGEMENT, THESE PLANS AND/OR SPECIFICATIONS ARE IN COMPLIANCE WITH THE 2020 ENERGY CODE.

MHE ENGINEERING
33 Airport Center Drive, Suite 202
New Windsor, NY 12553
(845) 587-3100
111 Wheatfield Drive, Suite 1
Milford, PA 18337
(570) 296-2765

JADE STONE ENGINEERING
mechanical, electrical, plumbing
444 VANDUZEE ST. WATERTOWN NY 13601
P: 315.636.4062
jse.engineering

HAZARDOUS MATERIAL NOTE:
THE SERVICES PROVIDED BY MHE, INCLUDING ALL WORK DEPICTED ON MHE PLANS, DO NOT INCLUDE SERVICES RELATED TO THE IDENTIFICATION, CONTROLS OR HANDLING OF HAZARDOUS MATERIALS, INCLUDING SUCH MATERIALS AS ASBESTOS AND LEAD PAINT. ALL TESTING, IDENTIFICATION, ABATEMENT, CONTROLS, AND HANDLING OF HAZARDOUS MATERIALS SHALL BE UNDERTAKEN BY A HAZARDOUS MATERIAL CONSULTANT AND CERTIFIED PROFESSIONALS. IF SUCH MATERIALS HAVE BEEN IDENTIFIED, CONTRACTOR WILL COMMUNICATE DIRECTLY WITH HAZARDOUS MATERIAL PROFESSIONAL FOR THE PERFORMANCE OF ANY WORK ON OR ADJACENT TO SAID MATERIALS. IF UNIDENTIFIED MATERIALS OF CONCERN ARE ENCOUNTERED WHILE UNDERTAKING THE WORK SHOWN HEREON, CONTRACTOR SHALL IMMEDIATELY NOTIFY ENGINEER AND OWNER, AND SHALL OBTAIN DIRECTION FROM THE HAZARDOUS MATERIAL CONSULTANT PRIOR TO THE CONTINUATION OF WORK INVOLVING SUSPECTED MATERIAL.

UDIG·NY SAFE DIGGING STARTS HERE
CALL 811

UNAUTHORIZED ADDITION OR ALTERATION OF THIS PLAN IS A VIOLATION OF SECTION 7209(2) OF THE NEW YORK STATE EDUCATION LAW.

ALL PRODUCTION & INTELLECTUAL PROPERTY RIGHT RESERVED ©

CAESARS LANE WWTP EXPANSION PROJECT
145 CAESARS LN.
NEW WINDSOR, NY 12553

FOR TOWN OF NEW WINDSOR
555 UNION AVE.
NEW WINDSOR, NY 12553

ELECTRICAL LEGENDS, ABBREVIATIONS, & NOTES

REVISIONS

NO.	DESCRIPTION	DATE

ISSUED DATE:	21 NOVEMBER, 2024
DESIGN BY:	RRM
DRAWN BY:	CDJ
CHECKED BY:	MGR
REVIEWED BY:	JER

SHEET NO.
E-001

PROJECT # 18-732 PHASE #

GENERAL SHEET NOTES:

1. REFER TO E-001 FOR ELECTRICAL LEGENDS, ABBREVIATIONS AND GENERAL PROJECT NOTES.
2. NEW ELECTRICAL EQUIPMENT BASIS OF DESIGN - EATON
3. PROVIDE GROUNDING PER NEC FOR ALL ELECTRICAL EQUIPMENT AND ASSOCIATED EQUIPMENT.
4. ALL CONDUCTORS AND EQUIPMENT NOT SHOWN FOR CLARITY, COORDINATE WITH ALL PRIME CONTRACTORS AND PROVIDE COMPLETE ELECTRICAL CIRCUITING FOR ALL INSTALLED EQUIPMENT. ALL REQUIREMENTS TO BE PER NEC.
5. REFER TO ELECTRICAL FLOOR PLAN DRAWINGS AND ELECTRICAL SITE PLAN FOR GENERAL LOCATIONS AND DUCT BANK INFORMATION.
6. REFER TO ELECTRICAL DETAIL SHEETS AND SCHEDULE SHEETS FOR ADDITIONAL INFORMATION/REQUIREMENTS.
7. CONTRACTOR TO PROVIDE ADDITIONAL LUG TERMINATION KITS OR PIN ADAPTORS WITHIN EQUIPMENT SHOWN/SPECIFIED AS NECESSARY TO TERMINATE THE NUMBER OF SETS OF CONDUCTORS AND SIZE SHOWN/SPECIFIED.
8. CIRCUITS SHOWN ARE POWER. REFER TO SCHEDULES FOR ADDITIONAL CIRCUITS.
9. NOT ALL REQUIRED THRU-WALL AND THRU-FLOOR WATERTIGHT PENETRATIONS SHOWN FOR CLARITY. CONTRACTOR TO PROVIDE A THRU-WALL/FLOOR WATERTIGHT PENETRATION FOR ALL PENETRATIONS WITHIN BUILDING EXTERIOR WALLS AND FLOORS. REFER TO DETAIL SHEETS FOR ADDITIONAL INFORMATION.
10. CONTRACTOR TO COORDINATE OVERALL SEQUENCE OF CONSTRUCTION WITH APPLICABLE CONTRACTOR, OWNER, AND ENGINEER
11. ALL CONDUCTORS TO BE COPPER AND CONTAIN THWN OR XHHW INSULATION (UNLESS OTHERWISE NOTED).

SHEET KEY NOTES:

1. REFER TO ELECTRICAL DETAILS FOR ADDITIONAL INFORMATION/REQUIREMENTS.
2. PROVIDE BREAKER WITH ELECTRONIC LSI TRIP UNIT. REFER TO SPECIFICATIONS FOR ADDITIONAL INFORMATION.
3. (4)#4/0 & #4G, 2-1/2"C
4. CONTRACTOR TO PROVIDE TWO (2) 3/4"Ø x 10' COPPER GROUND RODS. PROVIDE GROUNDING ELECTRODE FOR BUILDING SERVICE PER NEC. GROUND RODS TO BE PLACED AT MINIMUM OF 10 FEET APART. BOND GROUND RODS TOGETHER WITH A LOOPED #2 COPPER CONDUCTOR. CONTRACTOR TO ADDITIONALLY BOND TO BUILDING GROUND RING AND LIGHTNING PROTECTION SYSTEM UTILIZING #2 COPPER CONDUCTOR.
5. PROVIDE CUSTOMER POWER METERING INTERNAL TO PANEL. METER TO BE MODEL POWER XPERT METER 2000 SERIES AS MANUFACTURED BY EATON OR APPROVED EQUAL. PROVIDE METER WITH OPTIONAL COMMUNICATIONS EXPANSION CARD TO ENABLE ETHERNET CONNECTION TO SCADA FOR MONITORING. PROVIDE ALL REQUIRED INTERNAL PROTECTION AND CABLING AS REQUIRED.
6. PROVIDE SECONDARY SURGE PROTECTIVE DEVICE SUITABLE FOR INSTALLED SERVICE PER MANUFACTURERS RECOMMENDATIONS. AT MINIMUM DEVICE TO BE RATED FOR A SURGE CAPACITY RATING OF 200KA PER PHASE, BE A TYPE 2 DEVICE, 20KA NOMINAL DISCHARGE CURRENT, AND CONTAIN STANDARD PACKAGE OPTIONS/FEATURES. PROVIDE DEVICE INTERNAL TO PANEL AND PROVIDE DISCONNECT AS REQUIRED. BOND TO BUILDING GROUND SYSTEM.
7. (3)#1/0 & #5G, 2"C.
8. REFER TO ELECTRICAL SCHEDULES FOR ADDITIONAL INFORMATION/REQUIREMENTS.
9. NOT ALL LOADS SHOWN FOR CLARITY. REFER TO EQUIPMENT CONNECTION SCHEDULE, AND PANEL SCHEDULES FOR ADDITIONAL CIRCUITING INFORMATION/REQUIREMENTS.
10. CONTRACTOR TO BOND TO BUILDING GROUND SYSTEM. UTILIZE #2 COPPER GROUND CONDUCTOR UNLESS OTHERWISE NOTED. REFER TO ELECTRICAL DETAILS FOR ADDITIONAL INFORMATION/REQUIREMENTS.
11. CONTRACTOR TO UTILIZE EXISTING SPACE (SPARE BUCKET) WITHIN THE MCC TO INSTALL PROPOSED FEEDER CIRCUIT BREAKER BUCKET AS SHOWN. PROPOSED FEEDER CIRCUIT BREAKER BUCKET AND ALL ASSOCIATED EQUIPMENT TO BE COMPATIBLE WITH EXISTING TO REMAIN MCC. NOTE, THE EXISTING MCC WAS MANUFACTURED BY SQUARE D COMPANY. CONTRACTOR TO FIELD VERIFY.
12. CONTRACTOR TO PROVIDE FEEDER CIRCUIT BREAKER BUCKET WITH NEW CIRCUIT BREAKER AND HINGED DOOR ALLOWING CIRCUIT BREAKER OPERATION WHILE THE DOOR IS CLOSED. PROPOSED HINGED DOOR TO BE EQUIPPED WITH THROUGH DOOR HANDLE OPERATOR FOR PROPOSED CIRCUIT BREAKER OPERATION. IN ADDITION CONTRACTOR TO PROVIDE/INSTALL ADDITIONAL MCC BLANK PLATE IF REQUIRED (SIZED AS REQUIRED) TO ACCOMMODATE NEWLY INSTALLED FEEDER CIRCUIT BREAKER BUCKET. CONTRACTOR TO PROVIDE ALL NECESSARY CABLING, LUGS, TERMINATIONS, AND ACCESSORIES TO INSTALL PROPOSED FEEDER CIRCUIT BREAKER BUCKET WITHIN EXISTING MCC. FINAL SOLUTION TO BE UL LISTED. CONTRACTOR TO FIELD VERIFY.
13. PROPOSED FEEDER CIRCUIT BREAKER BUCKET TO CARRY AN 18 MONTH WARRANTY AFTER DATE OF INSTALLATION. FEEDER CIRCUIT BREAKER BUCKET TO BE SOURCED FROM ADVANCED ELECTRICAL AND MOTOR CONTROLS INCORPORATED (WWW.AEAMC.COM) OR APPROVED EQUAL.
14. (4)#250 & #4G, 4"C.

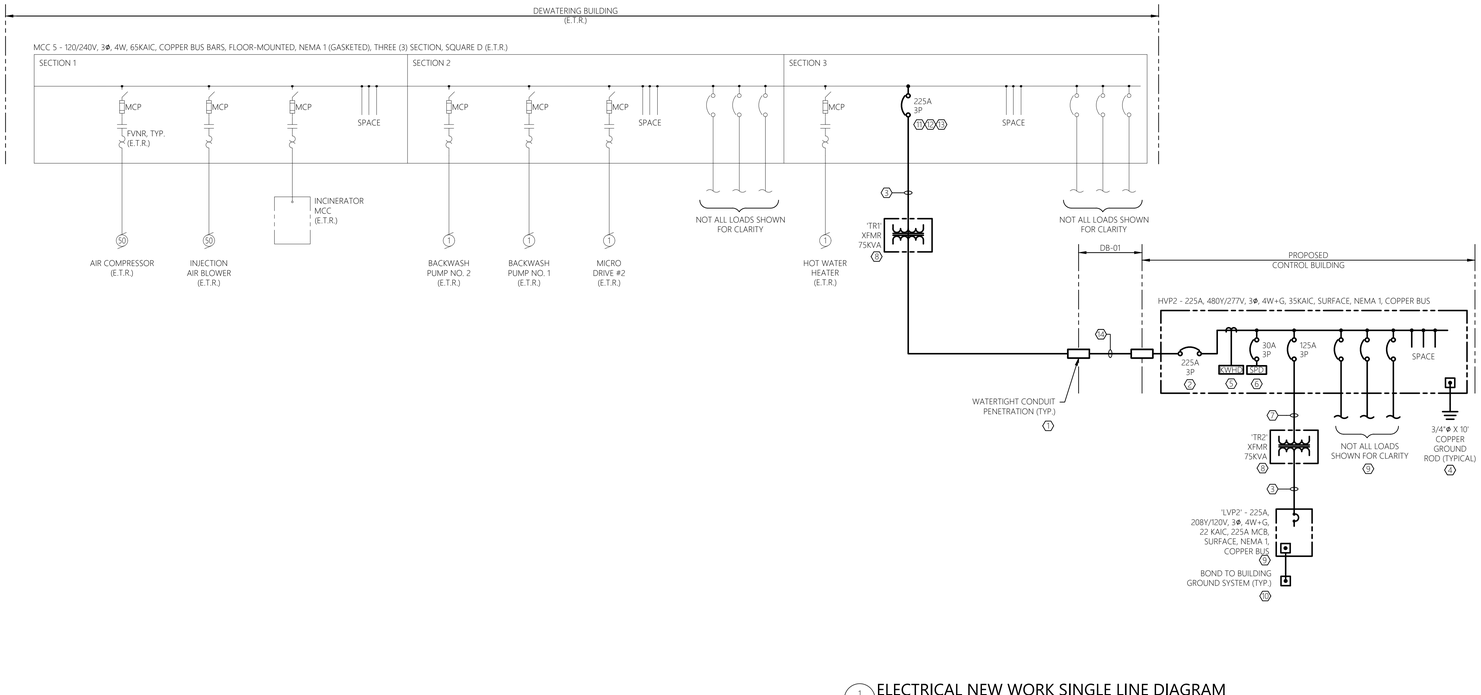

1 E-010 ELECTRICAL NEW WORK SINGLE LINE DIAGRAM
SCALE: NTS — CAESAR LANE WWTP

MHE ENGINEERING
33 Airport Center Drive, Suite 202
New Windsor, NY 12553
(845) 587-3100
111 Wheatfield Drive, Suite 1
Milford, PA 18337
(570) 296-2765

JADE STONE ENGINEERING
mechanical, electrical, plumbing
444 VANDUZEE ST. WATERTOWN NY 13601
P: 315.536.4062 jse.engineering

HAZARDOUS MATERIAL NOTE:

THE SERVICES PROVIDED BY MHE, INCLUDING ALL WORK DEPICTED ON MHE PLANS, DO NOT INCLUDE SERVICES RELATED TO THE IDENTIFICATION, CONTROLS OR HANDLING OF HAZARDOUS MATERIALS, INCLUDING SUCH MATERIALS AS ASBESTOS AND LEAD PAINT. ALL TESTING, IDENTIFICATION, ABATEMENT, CONTROLS, AND HANDLING OF HAZARDOUS MATERIALS SHALL BE UNDERTAKEN BY A HAZARDOUS MATERIAL CONSULTANT AND CERTIFIED PROFESSIONALS. IF SUCH MATERIALS HAVE BEEN IDENTIFIED, CONTRACTOR WILL COMMUNICATE DIRECTLY WITH HAZARDOUS MATERIAL PROFESSIONAL FOR THE PERFORMANCE OF ANY WORK ON OR ADJACENT TO SAID MATERIALS. IF UNIDENTIFIED MATERIALS OF CONCERN ARE ENCOUNTERED WHILE UNDERTAKING THE WORK SHOWN HEREON, CONTRACTOR SHALL IMMEDIATELY NOTIFY ENGINEER AND OWNER, AND SHALL OBTAIN DIRECTION FROM THE HAZARDOUS MATERIAL CONSULTANT PRIOR TO THE CONTINUATION OF WORK INVOLVING SUSPECTED MATERIAL.

UDIG·NY SAFE DIGGING STARTS HERE CALL 811

UNAUTHORIZED ADDITION OR ALTERATION OF THIS PLAN IS A VIOLATION OF SECTION 7209(2) OF THE NEW YORK STATE EDUCATION LAW.

ALL PRODUCTION & INTELLECTUAL PROPERTY RIGHT RESERVED ©

CAESARS LANE WWTP
EXPANSION PROJECT
145 CAESARS LN.
NEW WINDSOR, NY 12553

FOR TOWN OF NEW WINDSOR
555 UNION AVE.
NEW WINDSOR, NY 12553

ELECTRICAL
NEW WORK
SINGLE LINE DIAGRAMS

REVISIONS

NO.	DESCRIPTION	DATE

ISSUED DATE:	21 NOVEMBER, 2024
DESIGN BY:	RRM
DRAWN BY:	CDJ
CHECKED BY:	MGR
REVIEWED BY:	JER

SHEET NO.

E-010

PROJECT # 18-732 PHASE #

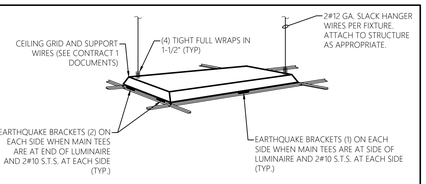

1 E-030 TYPICAL LAY-IN FIXTURE MOUNTING DETAIL

SCALE: NTS

GENERAL NOTES:

1. DETAIL IS TYPICAL OF EACH FURNACE SYSTEM. (TYPICAL OF 2)
2. PROVIDE ALL LINE VOLTAGE WIRING (120V AND ABOVE).
3. CR1 CONTACT PROVIDED FOR LOW VOLTAGE INTERLOCK WITH REFERENCED EQUIPMENT (FURNACE).
4. PROVIDE 30MM MUSHROOM HEAD EMERGENCY STOP. PROVIDE LABEL. SEE ELECTRICAL POWER PLAN E-900 FOR LOCATION OF EMERGENCY STOP. INSTALL EMERGENCY STOP AT 4 FT ABOVE FINISHED FLOOR.
5. EMERGENCY STOP TO BE PUSH-TO-OPEN / TWIST-AND-PULL-TO-RESET (TO NORMALLY CLOSED).
6. PROVIDE NEMA-1 ENCLOSURES FOR CR1 AND REQUIRED TERMINAL STRIPS.
7. ALL CONTACTS, WIRING, AND EMERGENCY STOPS TO BE PROVIDED BY CONTRACTOR FOR AN OVERALL COMPLETE AND OPERABLE FURNACE EMERGENCY SHUT DOWN FUNCTION .
8. COORDINATE ALL REQUIREMENTS WITH THE MECHANICAL CONTRACTOR (CONTRACT #1M).

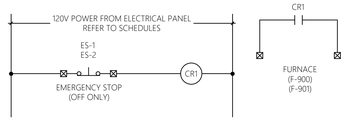

2 E-030 TYPICAL FURNACE EMERGENCY SHUT-DOWN WIRING DETAIL

SCALE: NTS

GENERAL NOTES:

1. CONTRACTOR TO PROVIDE 120V, 20A PHOTO CONTROL WITH ADJUSTABLE SHIELD FOR CONTROL OF EXTERIOR LIGHTING CIRCUITS. INTERLOCK WITH ASTRONOMICAL TIME SWITCHES. CONFIRM FINAL LOCATION WITH THE OWNER PRIOR TO ROUGH-IN. INSTALL PER MANUFACTURER'S RECOMMENDATIONS.
2. CONTRACTOR TO PROVIDE WATTSTOPPER RT-200 ASTRONOMICAL TIME SWITCH OR APPROVED EQUAL WITHIN NEMA 1 ENCLOSURE. SWITCH TO CONTROL PROPOSED EXTERIOR WALL MOUNTED LIGHT FIXTURES TYPES 'WP1' & 'WP1E'. PROGRAM TIME SWITCH FOR LIGHTING 'ON' AT ASTRONOMICAL SUNSET AND 'OFF' AT ASTRONOMICAL SUNRISE. FINAL ON/OFF PROGRAMMING PARAMETERS TO BE COORDINATED WITH THE OWNER.

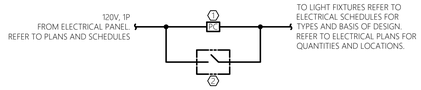

3 E-030 TYPICAL PHOTOCELL WIRING DETAIL

SCALE: NTS

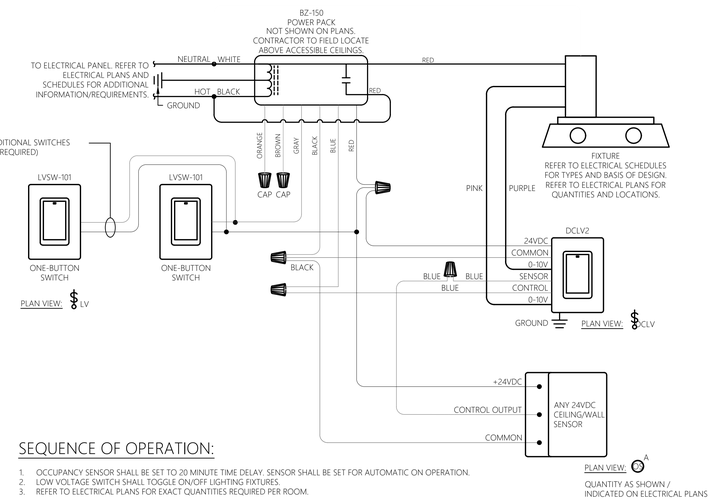

SEQUENCE OF OPERATION:

1. OCCUPANCY SENSOR SHALL BE SET TO 20 MINUTE TIME DELAY. SENSOR SHALL BE SET FOR AUTOMATIC ON OPERATION.
2. LOW VOLTAGE SWITCH SHALL TOGGLE ON/OFF LIGHTING FIXTURES.
3. REFER TO ELECTRICAL PLANS FOR EXACT QUANTITIES REQUIRED PER ROOM.

4 E-030 TYPICAL ANALOG OCCUPANCY SENSOR WITH POWER PACK & LOW VOLTAGE MOMENTARY SWITCH DETAIL

SCALE: NTS

GENERAL NOTES:

1. POWER AND COMMUNICATION CONDUITS TO HAVE SEPARATION OF 12" MINIMUM
2. DETAIL IS TYPICAL AND MAY REFLECT CONDUITS NOT REQUIRED FOR PROJECT.
3. FINISHED SURFACE TO MATCH SURFACE BEING DISTURBED.
   - IN AREA OF GRASS: USE 4" TOP SOIL & SEEDING (COVER WITH MULCH).
   - IN ROADWAY OR NON-GRASS: USE COMPACTED 95% PROCTOR GRANULAR FILL.
4. CONTRACTOR TO UTILIZE CONDUIT SPACERS FOR ALL DUCT BANKS. NOT SHOWN ON DETAIL FOR CLARITY.

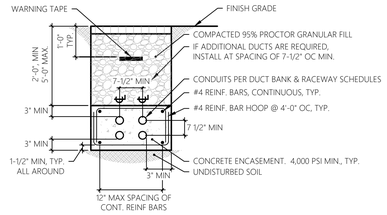

7 E-030 TYPICAL REINFORCED CONCRETE DUCT BANK SECTION

SCALE: NTS

GENERAL NOTES:

1. POWER AND COMMUNICATION CONDUITS TO HAVE SEPARATION OF 12" MINIMUM
2. DETAIL IS TYPICAL AND MAY REFLECT CONDUITS NOT REQUIRED FOR PROJECT.
3. FINISHED SURFACE TO MATCH SURFACE BEING DISTURBED.
   - IN AREA OF GRASS: USE 4" TOP SOIL & SEEDING (COVER WITH MULCH).
   - IN ROADWAY OR NON-GRASS: USE COMPACTED 95% PROCTOR GRANULAR FILL.
4. CONTRACTOR TO UTILIZE CONDUIT SPACERS FOR ALL DUCT BANKS. NOT SHOWN ON DETAIL FOR CLARITY.

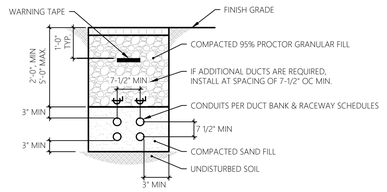

8 E-030 TYPICAL SAND FILL DUCT BANK SECTION DETAIL

SCALE: NTS

GENERAL NOTES:

1. CONDUIT MOVEMENT PROVISIONS - WHERE CONDUITS ARE SUBJECT TO MOVEMENT, PROVIDE EXPANSION AND EXPANSION/DEFLECTIONS FITTINGS TO PREVENT DAMAGE TO ENCLOSED CONDUCTORS OR CONNECTED EQUIPMENT. THIS INCLUDES, BUT IS NOT LIMITED TO:
   1.1. WHERE CONDUITS CROSS STRUCTURAL JOINTS INTENDED FOR EXPANSION, CONTRACTION, OR DEFLECTION.
   1.2. WHERE CONDUITS ARE SUBJECT TO EARTH MOVEMENT BY SETTLEMENT OR FROST.

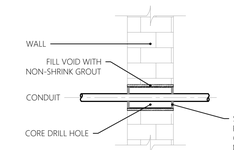

9 E-030 TYPICAL BLOCK/BRICK/CAST-IN PLACE CONDUIT PENETRATION DETAIL

SCALE: NTS

GENERAL NOTES:

1. GENERIC ROUGH-IN REQUIREMENTS ARE ILLUSTRATED IN THE ADJACENT DETAIL. CONTRACTOR SHALL COORDINATE WITH OWNER TO PROVIDE ACTUAL ROUGH-IN REQUIRED FOR EACH SPECIFIC DOOR INSTALLATION. THIS DETAIL IS NOT INTENDED TO SHOW ALL CONDITIONS/INSTALLATION REQUIREMENTS.
2. ACCESS CONTROL SYSTEM AND ASSOCIATED EQUIPMENT, CABLING, COMPONENTS, AND DEVICES ARE PROVIDED BY THE OWNER. THIS CONTRACT TO PROVIDE ALL REQUIRED RACEWAY AND BOXES FOR AN OVERALL COMPLETE AND OPERABLE SYSTEM. COORDINATE FINAL REQUIREMENTS CLOSELY WITH THE OWNER.

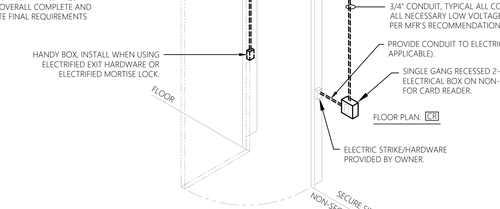

13 E-030 TYPICAL ACCESS CONTROL DOOR ROUGH-IN DETAIL

SCALE: NTS

GENERAL NOTES:

1. BOND ALL NORMAL AND EMERGENCY EQUIPMENT TO GROUND SYSTEM.
2. DETAIL IS TYPICAL AND NOT ALL GROUNDING MAY BE SHOWN. SOME COMPONENTS SHOWN ON DETAIL MAY NOT BE PRESENT/APPLICABLE. PROVIDE ADDITIONAL GROUNDING AS REQUIRED PER A.250 (NEC).
3. REFER TO ELECTRICAL SINGLE LINE DIAGRAMS FOR GROUND CONDUCTOR SIZES. ALL REQUIREMENTS TO BE PER NEC.
4. ALL GROUNDING CONDUCTORS TO BE COPPER (UOI).

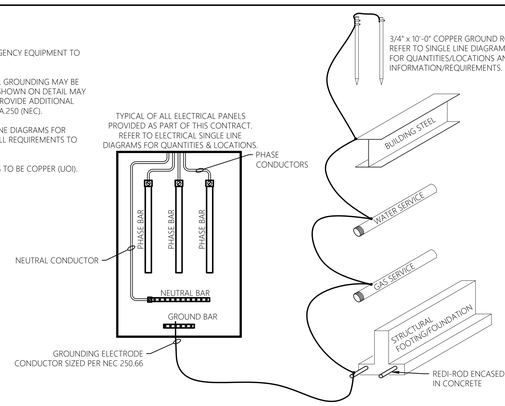

11 E-030 TYPICAL PANEL GROUNDING DETAIL

SCALE: NTS

GENERAL NOTES:

1. REFER TO ELECTRICAL PLANS FOR GENERAL QUANTITIES/LOCATIONS. COORDINATE FINAL QUANTITIES/LOCATIONS WITH APPLICABLE CONTRACTOR, ENGINEER, OWNER, AND EQUIPMENT MANUFACTURER.
2. BOND ALL NORMAL AND EMERGENCY EQUIPMENT TO GROUND SYSTEM.
3. DETAIL IS TYPICAL AND NOT ALL GROUNDING MAY BE SHOWN. SOME COMPONENTS SHOWN ON DETAIL MAY NOT BE PRESENT/APPLICABLE. PROVIDE ADDITIONAL GROUNDING AS REQUIRED PER A.250 (NEC).
4. ALL GROUND CONDUCTORS SHALL BE IN ACCORDANCE WITH THE NEC.
5. INSTALL AIR TERMINAL/DOWN CONDUCTOR PER MANUFACTURERS RECOMMENDATIONS.
6. REFER TO SPECIFICATIONS FOR ADDITIONAL INFORMATION/REQUIREMENTS.

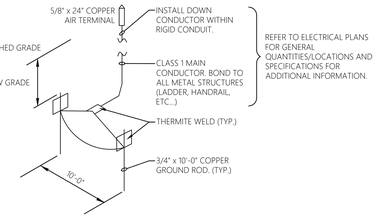

12 E-030 TYPICAL LIGHTNING PROTECTION GROUNDING DETAIL

SCALE: NTS

GENERAL NOTES:

1. CONSTRUCTION SHALL BE A POLYMER CONCRETE.
2. HAND HOLE TO HAVE A MINIMUM TIER 15 RATING.
3. ALL HARDWARE SHALL BE STAINLESS STEEL. PROVIDE SLEEVES FOR ALL PENETRATIONS AS NECESSARY.
4. BOTTOM SHALL BE OPEN FOR DRAINAGE.
5. PROVIDE LOGO ON COVER 'ELECTRIC', OR 'COMMUNICATIONS'. COVER TO BE SECURED WITH STAINLESS STEEL PENTA BOLTS AND GASKETED.
6. HAND HOLES MUST MEET ALL APPLICABLE REQUIREMENTS OF ANSI/SCTE 77-2013 AND BE UL LISTED.
7. PROVIDE HAND HOLE AS 48" x 48" x 48". HAND HOLES SHALL MEET MINIMUM SIZE REQUIREMENTS IN ACCORDANCE WITH NEC ARTICLE 314.30. CONTRACTOR TO FIELD VERIFY.
8. HAND HOLE TO BE AS MANUFACTURED BY QUAZITE (HUBBELL POWER SYSTEMS), OLD CASTLE, OR APPROVED EQUAL.
9. PROVIDE HEAVY DUTY FIBERGLASS CABLE RACKS AND SUPPORTS ON EACH INTERIOR WALL OF HANDHOLE.
10. PROVIDE AS SPLIT HANDHOLE SEPARATING VOLTAGE, OR SIGNAL TYPE.

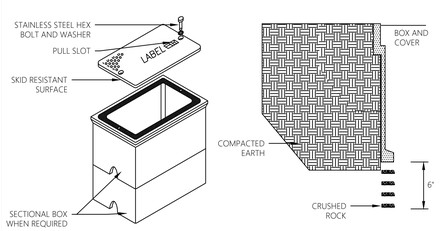

5 E-030 TYPICAL HANDHOLE DETAIL

SCALE: NTS

GENERAL NOTES:

1. DETAIL IS TYPICAL FOR PROPOSED VENTILATION SYSTEM WITHIN THE CONTROL BUILDING BATHROOM AND JANITOR CLOSET (EF-902, EF-903, AND EF-904).
2. PROVIDE ALL LINE VOLTAGE WIRING (120V AND ABOVE).
3. PROVIDE NEMA-1 ENCLOSURES FOR CONTROL RELAY 'CR1' AND REQUIRED TERMINAL STRIPS. CONTRACTOR TO FIELD LOCATE AS REQUIRED.
4. ALL CONTACTS, WIRING, AND RELAYS TO BE PROVIDED BY CONTRACTOR FOR AN OVERALL COMPLETE AND OPERABLE ROOM LIGHTING / VENTILATION SYSTEM. TO CLARIFY VENTILATION SYSTEM TO BE INTERLOCKED WITH ROOM LIGHTING CIRCUIT.
5. ALL REQUIRED ELECTRICAL EQUIPMENT, COMPONENTS, DEVICES, & WIRING METHODS TO BE SUITABLE FOR ENVIRONMENT INSTALLED. ALL REQUIREMENTS TO BE PER NEC.
6. CR1 TO BE RIB RELAY MODEL #RIB013P, OR APPROVED EQUAL.

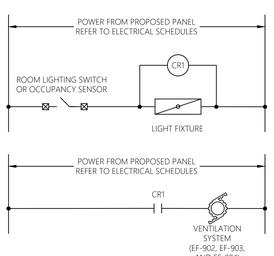

6 E-030 TYPICAL ROOM LIGHTING/VENTILATION SYSTEM INTERLOCK CIRCUITRY DETAIL

SCALE: NTS

GENERAL NOTES:

1. CONCRETE 4,000 PSI @ 28 DAYS.
2. PROVIDE AS 4" MIN. PAD UNLESS OTHERWISE NOTED.
3. DEFORMED BARS ASTM A-615, GRADE 60.
4. TOP SURFACE SHALL BE TROWEL FINISHED.
5. 3/4" CHAMFER ALONG ALL EXPOSED EDGES, INCLUDING OPENING.
6. REINFORCING SHALL BE AS FOLLOWS:
   - #4 BARS @ 12" EACH WAY
7. COORDINATE CONDUIT PENETRATIONS AT PAD WITH INSTALLED EQUIPMENT, AND FIELD CONDITIONS. CONTRACTOR TO FIELD VERIFY.

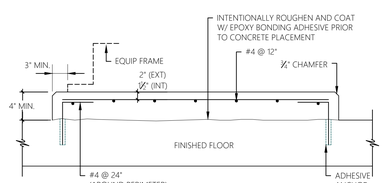

10 E-030 TYPICAL INTERIOR EQUIPMENT PAD DETAIL

SCALE: NTS

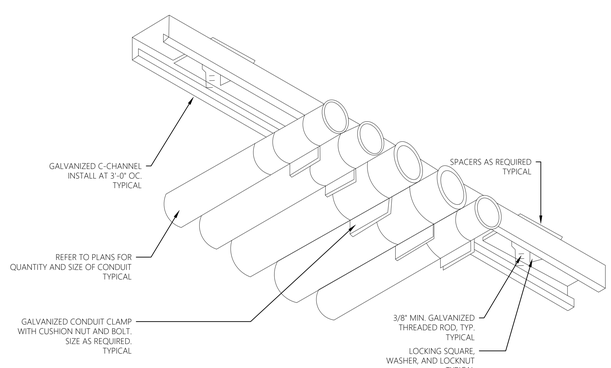

14 E-030 TYPICAL SUPPORT DETAIL

SCALE: NTS

MHE ENGINEERING
33 Airport Center Drive, Suite 202
New Windsor, NY 12553
(845) 587-3100
111 Wheatfield Drive, Suite 1
Milford, PA 18337
(570) 296-2765

JADE STONE ENGINEERING
mechanical, electrical, plumbing
444 VANDUZEE ST. WATERTOWN NY 13601
P: 315.536.4062 jse.engineering

HAZARDOUS MATERIAL NOTE:

THE SERVICES PROVIDED BY MHE, INCLUDING ALL WORK DEPICTED ON MHE PLANS, DO NOT INCLUDE SERVICES RELATED TO THE IDENTIFICATION, CONTROLS OR HANDLING OF HAZARDOUS MATERIALS, INCLUDING SUCH MATERIALS AS ASBESTOS AND LEAD PAINT. ALL TESTING, IDENTIFICATION, ABATEMENT, CONTROLS, AND HANDLING OF HAZARDOUS MATERIALS SHALL BE UNDERTAKEN BY A HAZARDOUS MATERIAL CONSULTANT AND CERTIFIED PROFESSIONALS. IF SUCH MATERIALS HAVE BEEN IDENTIFIED, CONTRACTOR WILL COMMUNICATE DIRECTLY WITH HAZARDOUS MATERIAL PROFESSIONAL FOR THE PERFORMANCE OF ANY WORK ON OR ADJACENT TO SAID MATERIALS. IF UNIDENTIFIED MATERIALS OF CONCERN ARE ENCOUNTERED WHILE UNDERTAKING THE WORK SHOWN HEREON, CONTRACTOR SHALL IMMEDIATELY NOTIFY ENGINEER AND OWNER, AND SHALL OBTAIN DIRECTION FROM THE HAZARDOUS MATERIAL CONSULTANT PRIOR TO THE CONTINUATION OF WORK INVOLVING SUSPECTED MATERIAL.

UDIG·NY SAFE DIGGING STARTS HERE
CALL 811

UNAUTHORIZED ADDITION OR ALTERATION OF THIS PLAN IS A VIOLATION OF SECTION 7209(2) OF THE NEW YORK STATE EDUCATION LAW.

ALL PRODUCTION & INTELLECTUAL PROPERTY RIGHT RESERVED ©

CAESARS LANE WWTP EXPANSION PROJECT
145 CAESARS LN.
NEW WINDSOR, NY 12553

FOR TOWN OF NEW WINDSOR
555 UNION AVE.
NEW WINDSOR, NY 12553

ELECTRICAL DETAILS

REVISIONS

NO.	DESCRIPTION	DATE

ISSUED DATE:	21 NOVEMBER, 2024
DESIGN BY:	RRM
DRAWN BY:	CDJ
CHECKED BY:	MGR
REVIEWED BY:	JER

SHEET NO.

E-030

PROJECT # 18-732 PHASE #

WIRING LEGEND

(A)	2 PAIR #14AWG FIRE ALARM WIRE, 3/4"C

GENERAL CABLING NOTES:
1. ALL FIRE ALARM CABLE SHALL BE INSTALLED WITHIN RED RGS CONDUIT, PER RACEWAY SCHEDULE. PROVIDE LABEL ON RACEWAY INDICATING FIRE ALARM CIRCUITRY WITHIN.
2. ALL WIRING TO COMPLY WITH NEC ARTICLE 760.
3. CONDUIT/RACEWAY SIZE IS UNLESS OTHERWISE INDICATED.

FIRE ALARM LEGEND

STROBES
- FIRE ALARM STROBE — WALL MOUNTED

COMBINATION HORN/STROBES
- FIRE ALARM HORN/STROBE — WALL MOUNTED

INITIATION DEVICES
- F — FIRE ALARM PULL STATION
- SD — SMOKE DETECTOR
- HD — FIRE ALARM HEAT DETECTOR
- CO — FIRE ALARM CARBON MONOXIDE DETECTOR

FIRE ALARM EQUIPMENT
- FACP — FIRE ALARM CONTROL PANEL
- NAC — NOTIFICATION APPLIANCE POWER SUPPLY
- FAA — FIRE ALARM ANNUNCIATOR PANEL
- CR — ADDRESSABLE CONTROL RELAY MODULE

F/A DEVICE MOUNTING LEGEND

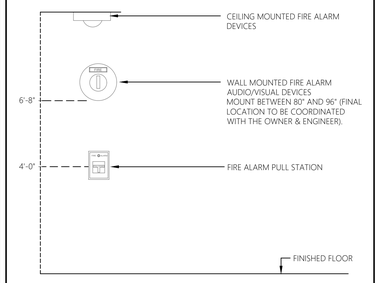

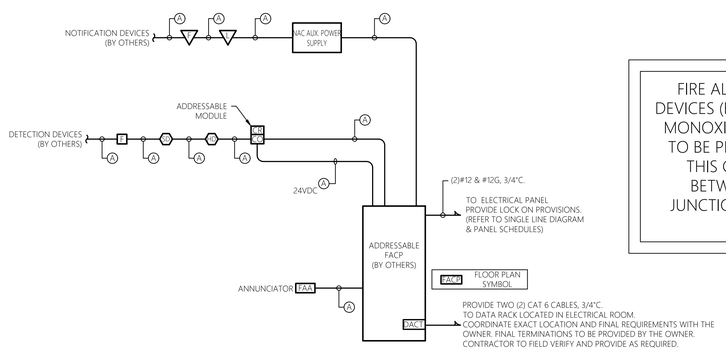

FIRE ALARM CONTROL PANEL AND ALL ASSOCIATED EQUIPMENT, COMPONENTS, AND DEVICES (HORNS, STROBES, PULL STATIONS, SMOKE DETECTORS, HEAT DETECTORS, CARBON MONOXIDE DETECTORS, ANNUNCIATORS, CONTROL RELAYS, POWER SUPPLIES, ETC...) ARE TO BE PROVIDED (FURNISHED AND INSTALLED) BY OTHERS, OUTSIDE OF THIS CONTRACT. THIS CONTRACT IS RESPONSIBLE FOR ALL CIRCUITRY (CONDUIT AND CONDUCTORS) BETWEEN DEVICES AS SHOWN AND SPECIFIED. PROVIDE EMPTY 4" SQUARE NEMA 1 JUNCTION BOX AT EACH DEVICE LOCATION AND COILED CONDUCTORS (3'-0" MIN.) FOR TERMINATION BY OTHERS.

1 E-031 TYPICAL FIRE ALARM DETAIL
SCALE: NTS

GENERAL SHEET NOTES:

1. REFER TO E-001 FOR ELECTRICAL LEGENDS, ABBREVIATIONS AND GENERAL NOTES.
2. ALL CABLING SHALL BE LABELED AT EACH END, AT FACEPLATE. FOLLOW ADJACENT LABELING SCHEME. CABLE LABELS SHALL BE SELF LAMINATING, PANDUIT OR EQUAL. FINAL LABELING REQUIREMENTS TO BE CLOSELY COORDINATED WITH OWNER.
3. ALL CABLING SHALL BE NEATLY RUN AND SUFFICIENTLY SUPPORTED. FOLLOW NECA 1-2010 GUIDELINES.
4. PROVIDE GROUNDING PER NEC FOR ALL ELECTRICAL EQUIPMENT AND ASSOCIATED EQUIPMENT.
5. ALL PENETRATIONS TO BE PERFORMED IN A NEAT MANOR AND CAULKED. PROVIDE FIRE RATED CAULK WHERE REQUIRED.
6. ALL CABLING SHALL BE TESTED FOR PROPER IDENTIFICATION AND CONTINUITY. ALL OPENS, SHORTS, CROSSES, GROUNDS AND REVERSALS SHALL BE CORRECTED.
7. CONTRACTOR TO COORDINATE ALL PROPOSED WORK WITH THE OWNER.
8. EXACT ROUTING OF HORIZONTAL CABLING SHALL BE DETERMINED BY CONTRACTOR IN FIELD.
9. CONTRACTOR SHALL SUBMIT PRODUCT/SUBMITTAL DATA ON ALL MATERIALS SHOWN ON THIS SHEET FOR APPROVAL BY ENGINEER AND OWNER, PRIOR TO PURCHASE/INSTALL.

SHEET KEY NOTES:

1. CONTRACTOR TO PROVIDE UTP PATCH PANEL (TYP. OF 1) FOR ALL NEW DEVICES. UTP PATCH PANEL TO BE MODEL 49255-D48 (48 PORT), 1RU AS MANUFACTURED BY LEVITON OR APPROVED EQUAL. PROVIDE PATCH CABLES AS REQUIRED. PATCH CABLES TO BE AS MANUFACTURED BY SUPERIOR ESSEX OR APPROVED EQUAL. FINAL REQUIREMENTS TO BE CLOSELY COORDINATED WITH OWNER PRIOR TO INSTALLATION & TERMINATIONS.
2. CONTRACTOR TO PROVIDE VERTICAL CABLE MANAGEMENT SYSTEMS WITHIN THE RACK ENCLOSURE ON EACH SIDE AS REQUIRED TO FACILITATE A NEAT CABLE MANAGEMENT SYSTEM. VERTICAL CABLE MANAGEMENT SYSTEMS TO BE VERSI DUCT (LENGTH TO SUIT RACK HEIGHT) AS MANUFACTURED BY LEVITON OR APPROVED EQUAL. FINAL REQUIREMENTS TO BE CLOSELY COORDINATED WITH OWNER PRIOR TO PURCHASE AND INSTALLATION.
3. CONTRACTOR TO PROVIDE HORIZONTAL CABLE MANAGEMENT SYSTEMS WITHIN THE RACK ENCLOSURE AS REQUIRED TO FACILITATE A NEAT CABLE MANAGEMENT SYSTEM. HORIZONTAL CABLE MANAGEMENT SYSTEMS TO BE MODEL 49253-LPM, 1RU, 4" D-SHAPE RINGS AS MANUFACTURED BY LEVITON OR APPROVED EQUAL. FINAL REQUIREMENTS TO BE CLOSELY COORDINATED WITH OWNER PRIOR TO PURCHASE AND INSTALLATION.
4. CONTRACTOR SHALL DETERMINE HOMERUN ROUTE IN FIELD. ALL THRU-WALL PENETRATIONS TO BE PROPERLY SEALED WITH APPROPRIATE FIRE PROOFING.
5. CONTRACTOR TO PROVIDE 10-SPACE SBX SERIES WALL MOUNTED RACK WITH TOP AND BOTTOM 4-1/2" FANS MODEL #AXS-FAN, BOTH AS MANUFACTURED BY MIDDLE ATLANTIC OR APPROVED EQUAL. CONTRACTOR TO PROVIDE ALL REQUIRED CIRCUITRY FOR FAN CONNECTION/OPERATION. FINAL REQUIREMENTS TO BE CLOSELY COORDINATED WITH OWNER PRIOR TO INSTALLATION & TERMINATIONS.
6. CONTRACTOR TO PROVIDE ALL REQUIRED EQUIPMENT WITHIN RACK ENCLOSURE TO FACILITATE MOUNTING OF PROPOSED EQUIPMENT INCLUDING BUT NOT LIMITED TO; REAR RACKRAIL (RRF10) AS MANUFACTURED BY MIDDLE ATLANTIC OR APPROVED EQUAL. FINAL REQUIREMENTS TO BE CLOSELY COORDINATED WITH OWNER PRIOR TO INSTALLATION & TERMINATIONS.
7. CONTRACTOR TO PROVIDE 48-PORT FULLY MANAGED NETWORK SWITCH AS MANUFACTURED BY NETGEAR OR APPROVED EQUAL. CONTRACTOR TO INSTALL WITHIN THE RACK UNDER THIS CONTRACT. FINAL REQUIREMENTS TO BE CLOSELY COORDINATED WITH OWNER PRIOR TO INSTALLATION & TERMINATIONS.
8. CONTRACTOR SHALL BE RESPONSIBLE FOR TERMINATIONS, TESTING, AND GROUNDING. COORDINATE ALL REQUIREMENTS WITH THE OWNER. INSTALLATION TO COMPLY WITH ALL APPLICABLE CODES AND STANDARDS. UPON COMPLETION OF TESTING TURN A COPY OF THE TESTING REPORT OVER TO THE OWNER AND ENGINEER.
   - PROPOSED DATA RACK IS LOCATED WITHIN ELECTRICAL ROOM
9. CONTRACTOR TO PROVIDE FIBER OPTIC PATCH PANEL WITHIN DATA RACK. CONTRACTOR TO PROVIDE REQUIRED CONNECTORS AND TERMINATE CABLE. CONTRACTOR TO COORDINATE FINAL REQUIREMENTS WITH THE OWNER.
10. CONTRACTOR TO FUSION SPLICE PROPOSED FIBER OPTIC CABLE ON PROPOSED FIBER OPTIC PATCH PANEL WITHIN DATA RACK.
11. PROVIDE EMPTY 4" SQUARE NEMA 4X JUNCTION BOX AND COVER AT EACH LOCATION AND 3/4" CONDUIT WITH CAT 6 CABLE BACK TO LOCATION OF SECURITY CONTROL PANEL. REFER TO ELECTRICAL PLANS FOR QUANTITIES AND GENERAL LOCATIONS. COORDINATE FINAL QUANTITIES AND LOCATIONS WITH OWNER AND ENGINEER PRIOR TO ROUGH-IN. COIL 10'-0" CONDUCTOR SLACK AT EACH END AND LABEL.
12. 12-STRAND, MULTI-MODE (50 MICRON CORE / 125 MICRON CLADDING DIAMETER), FIBER OPTIC CABLE, 4"C. PROVIDE MAXCELL FABRIC INNERDUCT WITHIN 4" CONDUIT. PROVIDE AS MAXCELL 4" 3-CELL PRODUCT. INSTALL PROPOSED FIBER OPTIC CABLE WITHIN 1-CELL OF THE PROPOSED INNERDUCT AND A PULL STRING THROUGH THE OTHER TWO (2) CELLS. FIBER OPTIC CABLE TO BE CONTINUOUS (NO SPLICES) AND SUITABLE FOR INDOOR/OUTDOOR APPLICATIONS, AS WELL AS, SUITABLE FOR DIRECT BURIAL APPLICATIONS. FIBER OPTIC CABLE TO BE MODEL CLEARCURVE AS MANUFACTURED BY CORNING OR APPROVED EQUAL. SUBMIT PRODUCT DATA TO ENGINEER FOR REVIEW DURING SUBMITTAL PHASE.
13. CONTRACTOR TO PROVIDE FIBER OPTIC PATCH PANEL WITHIN NEMA 1 ENCLOSURE TO ACCEPT INCOMING FIBER OPTIC CABLING. PROVIDE ALL REQUIRED CONNECTORS, TERMINATIONS, AND TESTING. PROVIDE PATCH CABLES AS REQUIRED. COORDINATE FINAL LOCATIONS AND TERMINATION REQUIREMENTS WITH OWNER AND ENGINEER.

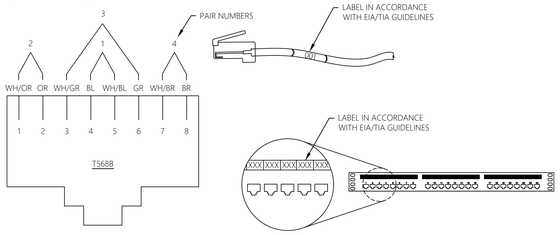

COORDINATE FINAL LABELING REQUIREMENTS WITH OWNER.

2 E-031 TYPICAL UTP PUNCHDOWN & LABLING DETAIL
SCALE: NTS

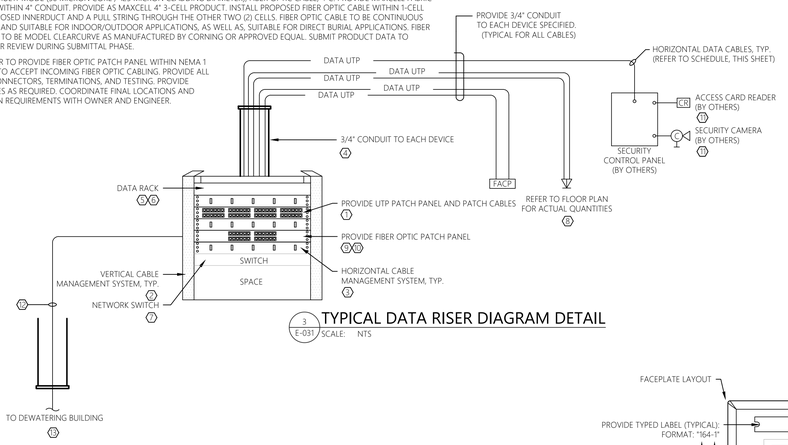

3 E-031 TYPICAL DATA RISER DIAGRAM DETAIL
SCALE: NTS

HORIZONTAL UTP CABLING

	CABLE COLOR				UTP TYPE					INSULATION		RJXX JACK COLOR					CONFIG.		HOMERUN LOCATION
	BLUE	WHITE	PURPLE	RED	GRAY	CAT 5e	CAT 6	CAT 6A	CAT 3 4-PR	RG-8	PLENUM	RISER	GENERAL	RED	BLACK	IVORY	BLUE	OTHER	T568A	T568B	
DATA	●				●		●				●							●		●	DATA RACK (ELECTRICAL ROOM)

GENERAL SCHEDULE NOTES:

1. COORDINATE FINAL CABLING, DEVICE, AND FACEPLATE COLORS WITH OWNER AND ENGINEER. CONTRACTOR TO COORDINATE FINAL COLORS DURING THE SUBMITTAL PHASE.
2. ALL CABLING TO BE LABELED AT EACH END.

REMARKS:

1. PROVIDE A DEDICATED CABLE FOR EACH JACK IDENTIFIED ON THE PLANS/DETAILS.
2. REFER TO ELECTRICAL PLANS FOR QUANTITIES & GENERAL LOCATIONS.
3. CONFIRM PUNCHDOWN SCHEME REQUIRED (T568B OR T568A) WITH OWNER PRIOR TO PUNCHDOWN (T568B SHOWN ON THIS DRAWING).

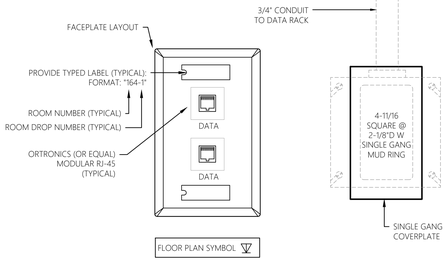

4 E-031 TYPICAL DATA BOX INSTALLATION DETAIL
SCALE: NTS

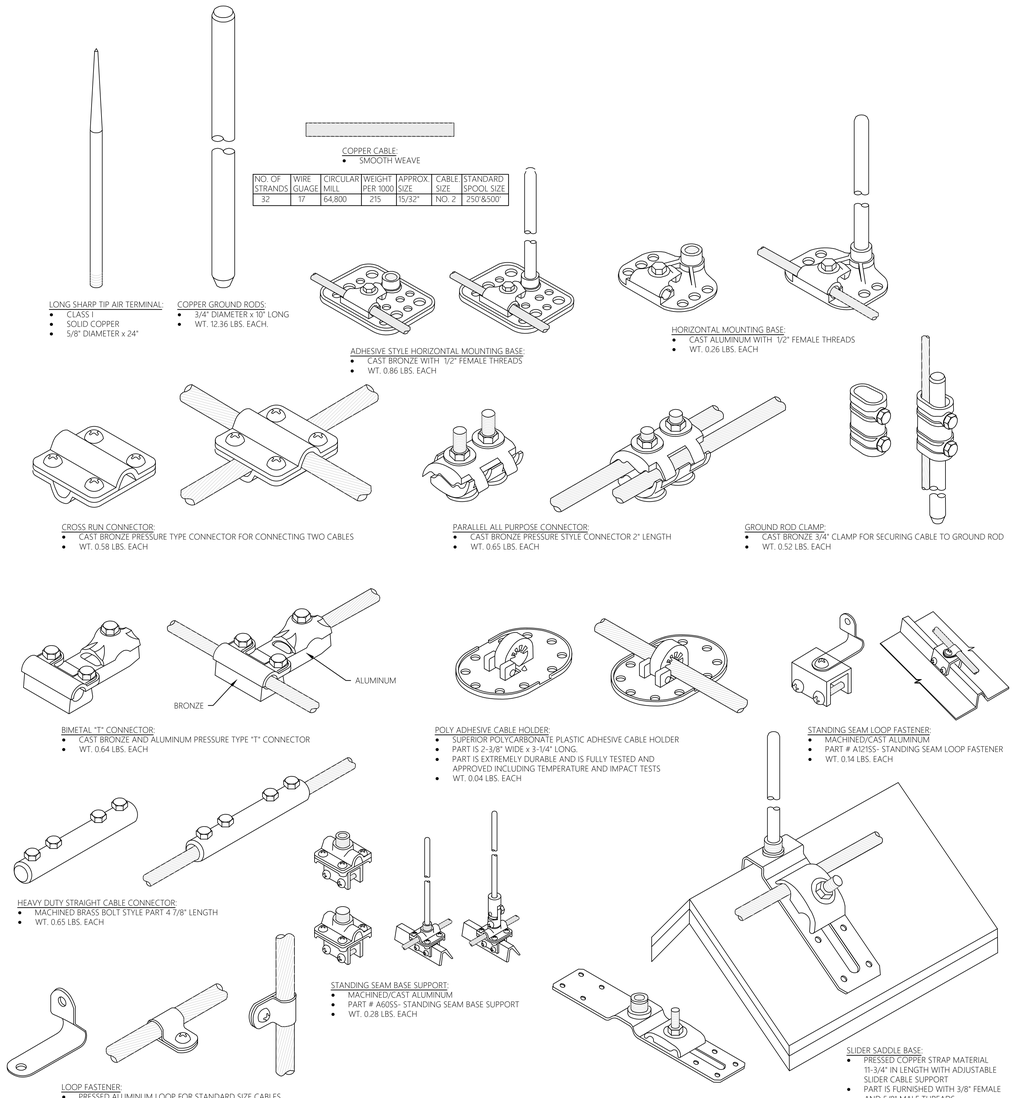

5 E-031 TYPICAL LIGHTNING PROTECTION & GROUNDING DETAIL
SCALE: NTS

MHE ENGINEERING
33 Airport Center Drive, Suite 202
New Windsor, NY 12553
(845) 567-3100
111 Wheatfield Drive, Suite 1
Milford, PA 18337
(570) 296-2765

JADE STONE ENGINEERING
mechanical, electrical, plumbing
444 VANDUZEE ST. WATERTOWN NY 13601
P: 315.636.4062
jse.engineering

HAZARDOUS MATERIAL NOTE:

THE SERVICES PROVIDED BY MHE, INCLUDING ALL WORK DEPICTED ON MHE PLANS, DO NOT INCLUDE SERVICES RELATED TO THE IDENTIFICATION, CONTROLS OR HANDLING OF HAZARDOUS MATERIALS, INCLUDING SUCH MATERIALS AS ASBESTOS AND LEAD PAINT. ALL TESTING, IDENTIFICATION, ABATEMENT, CONTROLS, AND HANDLING OF HAZARDOUS MATERIALS SHALL BE UNDERTAKEN BY A HAZARDOUS MATERIAL CONSULTANT AND CERTIFIED PROFESSIONALS. IF SUCH MATERIALS HAVE BEEN IDENTIFIED, CONTRACTOR WILL COMMUNICATE DIRECTLY WITH HAZARDOUS MATERIAL PROFESSIONAL FOR THE PERFORMANCE OF ANY WORK ON OR ADJACENT TO SAID MATERIALS. IF UNIDENTIFIED MATERIALS OF CONCERN ARE ENCOUNTERED WHILE UNDERTAKING THE WORK SHOWN HEREON, CONTRACTOR SHALL IMMEDIATELY NOTIFY ENGINEER AND OWNER, AND SHALL OBTAIN DIRECTION FROM THE HAZARDOUS MATERIAL CONSULTANT PRIOR TO THE CONTINUATION OF WORK INVOLVING SUSPECTED MATERIAL.

UDIG·NY SAFE DIGGING STARTS HERE
CALL 811

UNAUTHORIZED ADDITION OR ALTERATION OF THIS PLAN IS A VIOLATION OF SECTION 7209(2) OF THE NEW YORK STATE EDUCATION LAW.

ALL PRODUCTION & INTELLECTUAL PROPERTY RIGHT RESERVED ©

CAESARS LANE WWTP EXPANSION PROJECT
145 CAESARS LN.
NEW WINDSOR, NY 12553

FOR TOWN OF NEW WINDSOR
555 UNION AVE.
NEW WINDSOR, NY 12553

ELECTRICAL DETAILS

REVISIONS

NO.	DESCRIPTION	DATE

ISSUED DATE:	21 NOVEMBER, 2024
DESIGN BY:	RRM
DRAWN BY:	CDJ
CHECKED BY:	MGR
REVIEWED BY:	JER

SHEET NO.

E-031

PROJECT # 18-732 PHASE #

DUCT BANK SCHEDULE

DESIGNATION DB-XX	TYPE	ORIGIN	DESTINATION	CIRCUIT			REMARKS
				CONDUCTORS/CONDUIT	ORIGIN	DESTINATION	
DB-01	SAND FILL	DEWATERING BUILDING	PROPOSED HANDHOLE	(4)#250 & #4G, 4"C.	MCC-5	HANDHOLE HH-3E	
				12-STRAND, MULTI-MODE (50 MICRON CORE / 125 MICRON CLADDING DIAMETER), FIBER OPTIC CABLE, 4"C.	DATA RACK	HANDHOLE HH-3C	
DB-02	SAND FILL/ REINFORCED CONCRETE	PROPOSED HANDHOLE HH-3E & HH-3C	CONTROL BUILDING	4"C. SPARE	HANDHOLE HH-3C	FUTURE MCP LOCATION	
				4" C. SPARE	HANDHOLE HH-3C	FUTURE MCP LOCATION	
				(4)#250 & #4G, 4"C.	HANDHOLE HH-3E	HVP2	① ②
				12-STRAND, MULTI-MODE (50 MICRON CORE / 125 MICRON CLADDING DIAMETER), FIBER OPTIC CABLE, 4"C.	HANDHOLE HH-3C	DATA RACK	
				4" C. SPARE	HANDHOLE HH-3E	ADJACENT TO HVP2	

GENERAL SCHEDULE NOTES:

1. VERIFY CIRCUIT REQUIREMENTS WITH APPLICABLE EQUIPMENT MANUFACTURERS. PROVIDE CONDUCTORS AND CONDUIT AS REQUIRED.
2. COORDINATE DUCT BANK LOCATIONS AND INSTALLATIONS WITH EXISTING AND PROPOSED STRUCTURES, EQUIPMENT, PIPING SYSTEMS, CONTRACT #1G, OWNER, AND ENGINEER.
3. REFER TO THE TYPICAL DUCT BANK DETAILS FOR ADDITIONAL REQUIREMENTS.
4. REFER TO THE ELECTRICAL SITE PLANS FOR GENERAL LOCATIONS, ROUTING AND ADDITIONAL INFORMATION.
5. REFER TO THE ELECTRICAL SINGLE LINE DIAGRAMS FOR ADDITIONAL INFORMATION/REQUIREMENTS.
6. CONTRACTOR RESPONSIBLE FOR ALL ASPHALT REPAIR (IF ANY). COORDINATE FINAL REQUIREMENTS WITH THE OWNER, ENGINEER, AND CONTRACT #1G.
7. CONTRACTOR TO CLOSELY COORDINATE FINAL DUCT BANK REQUIREMENTS WITH CONTRACT #1G AND SHARE A COMMON TRENCH WHERE FEASIBLE/PRACTICAL. WHERE A COMMON TRENCH BETWEEN UTILITIES IS USED CONTRACTOR TO MAINTAIN NESC SEPARATION BETWEEN UTILITIES AT ALL TIMES.
8. REFER TO ELECTRICAL SITE PLAN FOR PROPOSED HAND HOLE LOCATIONS (IF ANY). WHERE HAND HOLES ARE REQUIRED, LOCATE IN GRASSY AREAS NOT SUBJECT TO VEHICLE LOADING. REFER TO ELECTRICAL SINGLE LINE DIAGRAMS, SPECIFICATIONS, & DETAILS FOR ADDITIONAL INFORMATION. COORDINATE FINAL REQUIREMENTS WITH OVERALL SITE PLANS, CONTRACT #1G, OWNER, AND ENGINEER.

REMARKS:

1. PROVIDE AS SAND FILLED DUCT BANK WHERE BENEATH GRASSY AREAS, OR AREAS NOT SUBJECT TO VEHICLE LOADING. PROVIDE AS REINFORCED CONCRETE DUCT BANK WHERE BENEATH PAVED AREAS, OR AREAS SUBJECT TO VEHICLE LOADING. COORDINATE FINAL REQUIREMENTS WITH THE OVERALL SITE PLANS AND WITH CONTRACT #1G.
2. FINAL SPARE CONDUIT STUB-UP LOCATION TO BE COORDINATED WITH THE OWNER AND CONTRACT #1G. PROVIDE PULL STRING AND CAP BOTH ENDS. CONTRACTOR TO PROVIDE LABEL FOR ALL SPARE CONDUITS INDICATING CONDUIT DESTINATION. REFER TO SPECIFICATIONS FOR ADDITIONAL INFORMATION/REQUIREMENTS.

TRANSFORMER SCHEDULE

DESIGNATION	LOCATION	RATING	TYPE	VOLTAGE		TAPS	DEGREE C TEMPERATURE RISE	NEMA ENCLOSURE	REMARKS
				PRIMARY	SECONDARY				
TR1	DEWATERING BLDG	75KVA	DRY-TYPE	240V Δ, 3Φ	480Y/277V, 3Φ	4 AT -2.5% FCBN 2 AT +2.5% FCAN	115	2	-
TR2	CONTROL BLDG	75KVA	DRY-TYPE	480V Δ, 3Φ	208Y/120V, 3Φ	4 AT -2.5% FCBN 2 AT +2.5% FCAN	115	2	-

GENERAL SCHEDULE NOTES:

1. REFER TO SPECIFICATIONS FOR ADDITIONAL INFORMATION/REQUIREMENTS.
2. PROVIDE 4" CONCRETE HOUSEKEEPING PAD AND ALL REQUIRED ANCHORING EQUIPMENT, MOUNTING HARDWARE, BRACKETS, ACCESSORIES, ETC... FOR EACH TRANSFORMER. REFER TO ELECTRICAL DETAILS FOR ADDITIONAL INFORMATION/REQUIREMENTS.
3. TRANSFORMERS TO BE PROVIDED WITH COPPER WINDINGS.
4. TRANSFORMERS TO MEET MINIMUM ENERGY EFFICIENCY STANDARDS SET FORTH IN 10 CFR PART 431 (DOE 2016).
5. TRANSFORMERS TO BE INSTALLED A MINIMUM OF 4" OFF WALL(S) TO ALLOW FOR VENTILATION. FINAL REQUIREMENTS TO BE COORDINATED WITH EQUIPMENT MANUFACTURERS RECOMMENDATIONS.

LUMINAIRE SCHEDULE

TYPE	DESCRIPTION	FIXTURE BASIS OF DESIGN	LENS/DIFFUSER/ FINISH	VOLTAGE	LAMPS	BALLAST BASIS OF DESIGN	MOUNTING	DIMMING	REMARKS
L1	2' X 2' TROFFER LED MODULE	COOPER - METALUX 22EN-LD2-19-UNV-L840-CD1-U	ACRYLIC	120V	LED 1,900 LUMENS / 4000K 16.5W	0-10V DIMMING DRIVER	RECESSED	YES	
L1E	2' X 2' TROFFER LED MODULE WITH EMERGENCY	COOPER - METALUX 22EN-LD2-19-UNV-EL7W-L840-CD1-U	ACRYLIC	120V	LED 1,900 LUMENS / 4000K 16.5W	0-10V DIMMING DRIVER	RECESSED	YES	① ②
L2	2' X 2' TROFFER LED MODULE	COOPER - METALUX 22EN-LD2-25-UNV-L840-CD1-U	ACRYLIC	120V	LED 2,500 LUMENS / 4000K 20W	0-10V DIMMING DRIVER	RECESSED	YES	
L2E	2' X 2' TROFFER LED MODULE WITH EMERGENCY	COOPER - METALUX 22EN-LD2-25-UNV-EL7W-L840-CD1-U	ACRYLIC	120V	LED 2,500 LUMENS / 4000K 20W	0-10V DIMMING DRIVER	RECESSED	YES	① ②
L3	6" LED MEDIUM BEAM DOWN LIGHT	COOPER (PORTFOLIO) LD6C-10IC-90-40-D010-B26-M-1-LI	SPECULAR CLEAR	120V	LED 1,000 LUMENS / 4000K 11W	0-10V DIMMING DRIVER	RECESSED	NO	⑨ ⑩ ⑪
L3E	6" LED MEDIUM BEAM DOWN LIGHT W/EMERGENCY	COOPER (PORTFOLIO) LD6C-10IC-90-40-D010-B26-M-1-LI-EIM7	SPECULAR CLEAR	120V	LED 1,000 LUMENS / 4000K 11W	0-10V DIMMING DRIVER	RECESSED	NO	① ② ⑨ ⑩ ⑪
L4	STAINLESS STEEL LED LIGHTING (1' x 2')	RIG-A-LITE MHLS04-L-C-2-U-MB-316	STAINLESS STEEL	120V	LED 3,620 LUMENS / 4000K 27W	0-10V DIMMING DRIVER	SURFACE	NO	⑫ ⑬
L4E	STAINLESS STEEL LED LIGHTING W/EMERGENCY (1' x 2')	RIG-A-LITE MHLS04-L-C-2-U-MB-EM-316	STAINLESS STEEL	120V	LED 3,620 LUMENS / 4000K 27W	0-10V DIMMING DRIVER	SURFACE	NO	① ② ⑫ ⑬
WP1	EXTERIOR WALL MOUNT LUMINAIRE	COOPER (MCGRAW-EDISON) IST-SA1B-740-U-SL4-BZ	BRONZE	120V	LED 3,342 LUMENS / 4000K 25.4W	LED DRIVER	WALL	NO	④ ⑤ ⑦ ⑧
WP1E	EXTERIOR WALL MOUNT LUMINAIRE W/EMERGENCY	COOPER (MCGRAW-EDISON) IST-SA1B-740-U-SL4-CBP-BZ	BRONZE	120V	LED 3,342 LUMENS / 4000K 25.4W	LED DRIVER	WALL	NO	① ④ ⑤ ⑥ ⑦ ⑧
A EXIT	ARCHITECTURAL LED EXIT SIGN	COOPER (EVENLITE) SOV-EM-R-1C-BA	BRUSHED ALUMINUM W/RED LETTERING	120V	LED 2.5W	-	CEILING OR WALL	-	① ② ③

GENERAL SCHEDULE NOTES:

1. MODELS ARE GIVEN FOR QUALITY ONLY, SUBSTITUTE LIGHT FIXTURES SHALL BE OF APPROVED EQUAL OR GREATER QUALITY.
2. ALL FIXTURES (WHERE APPLICABLE) SHALL BE POST FABRICATION PAINTED, BAKED ACRYLIC ENAMEL.
3. PROVIDE ALL NECESSARY MOUNTING HARDWARE, BRACKETS, ACCESSORIES, ETC... FOR INSTALLATION TYPE AS INDICATED.
4. ALL FIXTURES TO BE PROVIDED WITH LAMPS INSTALLED.
5. REFER TO ELECTRICAL PLANS FOR QUANTITIES AND GENERAL LOCATIONS.
6. REFER TO ELECTRICAL PLANS AND DETAILS FOR LIGHTING CONTROL AND ADDITIONAL INFORMATION/REQUIREMENTS.

REMARKS:

1. INTERCEPT & CONNECT TO NEAREST NON-SWITCHED PORTION OF LIGHTING CIRCUIT. TYPICAL FOR ALL EXIT SIGNS AND FIXTURES WITH INTEGRAL EMERGENCY BATTERY OPTION.
2. FIXTURE TO BE PROVIDED WITH INTEGRAL EMERGENCY BATTERY BACK-UP.
3. CONTRACTOR TO REFER TO ELECTRICAL FLOOR PLANS TO DETERMINE ORIENTATION OF FACES/ARROWS AND TO VERIFY MOUNTING TYPE.
4. REFER TO ELECTRICAL PLANS AND DETAILS FOR EXTERIOR LIGHTING CONTROL AND ADDITIONAL INFORMATION/REQUIREMENTS.
5. REFER TO ELECTRICAL PLANS FOR MOUNTING HEIGHTS. FINAL MOUNTING HEIGHT TO BE COORDINATED WITH THE OWNER/ENGINEER PRIOR TO ROUGH-IN.
6. FIXTURE TO BE PROVIDED WITH INTEGRAL COLD WEATHER BATTERY PACK.
7. FIXTURE TO BE UL LISTED FOR WET LOCATIONS.
8. FIXTURE TO BE DARK SKY COMPLIANT.
9. FIXTURE TO BE IC RATED.
10. FIXTURE TO BE UL LISTED FOR WET LOCATIONS WITH COVERED CEILINGS. PROVIDE GASKET KIT AS REQUIRED.
11. FIXTURE TO BE PROVIDED WITH HANGER BARS AS SPECIFIED.
12. PROVIDE EACH FIXTURE WITH STAINLESS STEEL MOUNTING BRACKETS FOR SURFACE MOUNTING AS SPECIFIED.
13. FIXTURE TO BE PROVIDED WITH 316 STAINLESS STEEL OPTION.

SWITCH TAG SCHEDULE

S-XX — TEXT ADJACENT TO SYMBOL REPRESENTS THE TAG

SWITCH TAG	DESCRIPTION	FACEPLATE COLOR	BASIS OF DESIGN FACEPLATE	SWITCH TYPE	BASIS OF DESIGN SWITCH	REMARKS
NO MARKING	STANDARD SWITCH	COORDINATE WITH OWNER/ENGINEER	THERMOPLASTIC NYLON	120V, 20A, HEAVY DUTY	PASS & SEYMOUR PT20AC1	
DCLV	DIMMABLE CONTROL LOW VOLTAGE LED SWITCH	COORDINATE WITH OWNER/ENGINEER	THERMOPLASTIC NYLON	LOW VOLTAGE	WATTSTOPPER DCLV-2	
LV	1-BUTTON LOW VOLTAGE LED SWITCH	COORDINATE WITH OWNER/ENGINEER	THERMOPLASTIC NYLON	LOW VOLTAGE	WATTSTOPPER LVSW-101	

GENERAL SCHEDULE NOTES:

1. NYLON FACEPLATE COLOR SHALL MATCH DEVICE COLOR.
2. ALL DEVICES SHALL BE PIGTAIL TYPE (WITH SEPARABLE WIRING HARNESS) WHERE AVAILABLE BY MANUFACTURER.
3. "a, b, c ..." LOWER CASE LETTERING IS USED TO INDICATE FIXTURE SWITCHING CONFIGURATION.
4. '3' OR '4' INDICATES 3 OR 4 WAY SWITCHING DEVICE. SUBSTITUTE INDICATED SWITCH TYPE (BASIS OF DESIGN COLUMN) WITH 3 OR 4 WAY VERSION.
5. REFER TO ELECTRICAL PLANS FOR TYPES, QUANTITIES, AND GENERAL LOCATIONS. REFER TO ELECTRICAL DETAILS FOR ADDITIONAL INFORMATION. COORDINATE FINAL REQUIREMENTS WITH THE OWNER AND ENGINEER.

OCCUPANCY SENSOR SCHEDULE

TYPE	TYPICAL USAGE	BASIS OF DESIGN	COVERAGE	TECHNOLOGY	MOUNTING	OPTIONS	REMARKS
A	GENERAL PURPOSE	WATTSTOPPER DT-200/205	2000SF WALKING/1000SF SITTING	DUAL TECHNOLOGY	CEILING/WALL	-	

GENERAL NOTES:

1. POWER PACKS NOT SHOWN ON PLAN. PROVIDE POWER PACKS AND ALL CIRCUITING AS REQUIRED FOR PROPER OPERATION OF LIGHTING SYSTEM. POWER PACKS SHALL BE MODEL "BZ" AS MANUFACTURED BY WATTSTOPPER OR APPROVED EQUAL. CONCEAL POWER PACK WITHIN CEILING/WALL ADJACENT TO SENSOR WHERE FEASIBLE.
2. CONTRACTOR TO FIELD ADJUST OCCUPANCY SENSORS AS REQUIRED TO LIGHT DESIRED AREAS. COORDINATE WITH OWNER, AND ENGINEER.
3. COORDINATE FINAL DEVICE & FACEPLATE COLORS WITH OWNER.
4. "a, b, c ..." LOWER CASE LETTERING IS USED TO INDICATE FIXTURE SWITCHING CONFIGURATION.
5. REFER TO ELECTRICAL PLANS FOR TYPES, QUANTITIES, AND GENERAL LOCATIONS. REFER TO ELECTRICAL DETAILS FOR ADDITIONAL INFORMATION. COORDINATE FINAL REQUIREMENTS WITH THE OWNER AND ENGINEER.

RACEWAY SCHEDULE

AREA	CABLING/RACEWAY METHOD	REMARKS
EXTERIOR EXPOSED	RGS	SEE NOTES BELOW
RISERS FROM UNDERGROUND	RGS	SEE NOTES BELOW
UNDERGROUND 90 DEGREE SWEEPS	RGS	SEE NOTES BELOW
UNDERGROUND (SAND FILL DUCT BANK)	PVC #80	SEE NOTES BELOW
UNDERGROUND (REINFORCED CONCRETE DUCT BANK)	PVC #40	SEE NOTES BELOW
IN SLAB	PVC #40	SEE NOTES BELOW
UNPROTECTED SERVICE CONDUCTORS - WITHIN A BUILDING	RGS	SEE NOTES BELOW
CONTROL BUILDING INTERIOR EXPOSED	EMT	SEE NOTES BELOW
DEWATERING BUILDING INTERIOR EXPOSED	RGS	SEE NOTES BELOW
CONCEALED WITHIN WALLS/ABOVE CEILING	MC CABLE	SEE NOTES BELOW
FINAL CONNECTION TO EQUIPMENT	FLEXIBLE METALLIC	SEE NOTES BELOW

GENERAL CONDUIT SCHEDULE NOTES:

1. FITTINGS:
   - RGS: THREADED
   - PVC: BELL OR GLUE
   - EMT : SET SCREW TYPE
   - FLEXIBLE CONDUIT: LISTED FITTINGS FOR USE WITH FLEXIBLE RACEWAY
2. ALL CIRCUITS SHALL CONTAIN DEDICATED NEUTRALS (NO MULTI-WIRE CIRCUITS PERMITTED)
3. CONDUIT SHALL NOT BE UTILIZED FOR EFFECTIVE GROUND FAULT RETURN PATH - ALL CIRCUITS SHALL CONTAIN DEDICATED GREEN INSULATED CONDUCTOR, SIZED PER DRAWINGS, OR IN ACCORDANCE WITH APPLICABLE NEC CRITERIA.
4. ALL RACEWAY TYPES ARE UNLESS OTHERWISE NOTED ON THE DRAWINGS.
5. "UNPROTECTED SERVICE CONDUCTORS - WITHIN A BUILDING" REFERS TO BUILDING SERVICE/FEEDER CONDUCTORS BETWEEN THE POINT THEY ENTER THE BUILDING UNTIL THE POINT AT WHICH THEY REACH THE FIRST DISCONNECTING DEVICE WITHIN THAT BUILDING.
6. CONTRACTOR TO PROVIDE TRANSITION FITTINGS TO SWITCH BETWEEN RACEWAY TYPES AS REQUIRED.

BRANCH CIRCUIT SCHEDULE

CIRCUIT BREAKER	PHASE CONDUCTORS AND/OR NEUTRAL CONDUCTORS	GROUND CONDUCTOR	CONDUIT
3 POLE CIRCUITS			
50/3	(3)#6	#10	1-1/2" CONDUIT
40/3	(3)#8	#10	1" CONDUIT
30/3	(3)#10	#10	3/4" CONDUIT
20/3	(3)#12	#12	3/4" CONDUIT
15/3	(3)#12	#12	3/4" CONDUIT
2 POLE CIRCUITS			
50/2	(2)#6	#10	1-1/2" CONDUIT
40/2	(2)#8	#10	1" CONDUIT
30/2	(2)#10	#10	3/4" CONDUIT
20/2	(2)#12	#12	3/4" CONDUIT
15/2	(2)#12	#12	3/4" CONDUIT
1 POLE CIRCUITS			
50/1	(2)#6	#10	1-1/2" CONDUIT
40/1	(2)#8	#10	1" CONDUIT
30/1	(2)#10	#10	3/4" CONDUIT
20/1	(2)#12	#12	3/4" CONDUIT
15/1	(2)#12	#12	3/4" CONDUIT

NOTES REGARDING THE USE OF THIS SCHEDULE:

1. USE THIS SCHEDULE FOR:
   - ALL RECEPTACLE AND LIGHTING CIRCUITS.
   - WHERE SPECIFIC CONDUCTOR/CONDUIT SIZING IS NOT INDICATED ELSEWHERE ON THE DRAWING SET.
   - FOR ANY BRANCH CIRCUITS THAT ARE REQUIRED TO BE RELOCATED/EXTENDED, ETC.
2. DO NOT USE THIS SCHEDULE:
   - FOR LARGE MECHANICAL LOADS (ANYTHING SHOWN WITHIN THE EQUIPMENT CONNECTION SCHEDULE).
   - FOR SERVICE ENTRANCE CONDUCTORS.
   - WHERE SPECIFIC CONDUCTOR/CONDUIT IS CALLED FOR ON THE DRAWINGS.
3. WHERE CIRCUIT LENGTH EXCEEDS 100' - CONTRACTOR SHALL USE NEXT HIGHER PHASE/NEUTRAL CONDUCTOR SIZE, TO COMPENSATE FOR VOLTAGE DROP.

PANEL LVP2 (SECTION 1) CONTROL BUILDING

225 AMP FRAME
225A MCB
208Y/120 VOLT 3ϕ, 4W+G
22KAIC RMS SYM

CIRCUIT NUMBER	CIRCUIT SERVED	BREAKER AMP	BREAKER POLE	BREAKER AMP	BREAKER POLE	CIRCUIT SERVED	CIRCUIT NUMBER
1	LIGHTS - LABORATORY/STORAGE	20	1	20	1	LIGHTS - BREAK/TRAING/ELEC./MECH. ROOM	2
3	LIGHTS - GENERAL OFFICE	20	1	20	1	LIGHTS - ENTRY/HALLWAYS	4
5	LIGHT - MENS/WOMENS RESTROOMS	20	1	20	1	LIGHTS - CHIEF OF OPERATIONS/CLERK OFFICE	6
7	LIGHTS - EXTERIOR	20	1	20	1	RECEPTS. - LABORATORY/STORAGE	8
9	RECEPTS. - BREAK/TRAINING ROOM	20	1	20	1	RECEPTS. - MECHANICAL ROOM	10
11	RECEPTS. - GENERAL OFFICE	20	1	20	1	RECEPTS. - HALLWAY//JANITOR CLOSET	12
13	RECEPTS. - MENS RESTROOM	20	1	20	1	RECEPTS. - WOMENS RESTROOM	14
15	RECEPTS. - ENTRYWAY/STAFF ENTRYWAY	20	1	20	1	RECEPTS. - CLERKS OFFICE	16
17	RECEPTS. - CHIEF OF OPERATIONS OFFICE	20	1	20	1	RECEPTS. - EXTERIOR	18
19	RECEPTS. - GENERAL OFFICE	20	1	20	1	REFRIGERATOR - TRAINING ROOM	20
21	REFRIGERATOR LABORATORY	20	1	20	1	RECEPTS. - ELECTRICAL ROOM	22
23	FREEZER - LABORATORY	20	1	20	1	RECEPTS. - BREAK/TRAINING RM. ABOVE COUNTER	24
25	DRINKING FOUNTAIN	20	1	20	1	DRINKING FOUNTAIN	26
27	COPIER/PRINTER - CLERK OFFICE	20	1	20	1	TELEVISION - BREAK/TRAINING ROOM	28
29	MAIN CONTROL PANEL	20	1	20	1	RECEPTS. - LABORATORY ABOVE COUNTER	30
31	DATA RACK	20	1	20	1	DISHWASHER - LABORATORY	32
33	SECURITY ALARM CONTROL PANEL	20	1	20	1	FUME HOOD LIGHT & RECEPTACLE - LABORATORY	34
35	FIRE ALARM CONTROL PANEL	20	1	20	1	FUME HOOD EXHAUST FAN - LABORATORY	36
37	DRYING OVEN - LABORATORY	50	2	50	2	DRYING OVEN - LABORATORY	38
39	↓					↓	40
41	RECEPTS. - GENERAL OFFICE	20	1	20	1	COPIER/PRINTER - GENERAL OFFICE	42
43	LOUVER W/MOTORIZED DAMPER LV-902	20	1	20	1	LOUVER W/MOTORIZED DAMPER LV-903	44
45	EXHAUST FAN EF-900	20	1	20	1	EXHAUST FAN EF-901	46
47	EXHAUST FAN EF-902	20	1	20	1	EXHAUST FAN EF-903	48
49	EXHAUST FAN EF-904	20	1	20	1	FURNACE F-900	50
51	WATER HEATER WH-900	20	1	20	1	FURNACE F-901	52
53	LOUVER W/MOTORIZED DAMPER LV-900	20	1	20	1	LOUVER W/MOTORIZED DAMPER LV-901	54

GENERAL SCHEDULE NOTES:

1. PROVIDE SPARE BREAKERS AS INDICATED.
2. PROVIDE ARC FLASH WARNING LABEL PER SPECIFICATIONS.
3. PROVIDE TYPED PANEL DIRECTORY INDICATING LOADS SERVED.
4. REFER TO ELECTRICAL PLANS FOR GENERAL LOCATIONS OF EQUIPMENT.
5. PROVIDE ALL REQUIRED MOUNTING HARDWARE, BRACKETS, ACCESSORIES, ETC...
6. CONTRACTOR TO BALANCE PROPOSED PANEL LOAD ACROSS ALL PHASES EQUALLY.
7. VERIFY ALL CIRCUIT BREAKER REQUIREMENTS WITH EQUIPMENT MANUFACTURER. PROVIDE AS REQUIRED.
8. COORDINATE FINAL LABELING REQUIREMENTS WITH THE OWNER AND PROVIDE NAMEPLATE PER SPECIFICATIONS.
9. PROVIDE TOTAL NUMBER OF 1P SPACES AS INDICATED. PROVIDE BLOCK OFF PLATES FOR ALL SPACES WHICH ARE NOT UTILIZED.
10. REFER TO ELECTRICAL SINGLE LINE DIAGRAMS, RISER DIAGRAMS, SCHEDULES & SPECIFICATIONS FOR ADDITIONAL INFORMATION/REQUIREMENTS.
11. PROVIDE LUG TERMINATION KITS, OR PIN ADAPTORS AS NECESSARY TO TERMINATE THE NUMBER OF SETS OF CONDUCTORS AND SIZE SHOWN/SPECIFIED.

ACCESSORIES & TRIM:

1. MOUNTING: SURFACE
2. NEMA 1 ENCLOSURE
3. DOOR-IN-DOOR COVER
4. COPPER BUS BARS
5. BASIS OF DESIGN: EATON
6. TWO (2) SECTION PANELBOARD (54CKT EACH)

PANEL LVP2 (SECTION 2) CONTROL BUILDING

225 AMP FRAME
225A MCB
208Y/120 VOLT 3ϕ, 4W+G
22KAIC RMS SYM

CIRCUIT NUMBER	CIRCUIT SERVED	BREAKER AMP	BREAKER POLE	BREAKER AMP	BREAKER POLE	CIRCUIT SERVED	CIRCUIT NUMBER
1	AIR COOLED CONDENSING UNIT ACCU-900	50	2	50	2	AIR COOLED CONDENSING UNIT ACCU-901	2
3	↓					↓	4
5	MOTORIZED ENTRANCE GATE	20	2	20	1	MOTORIZED ENTRANCE GATE RECEPTACLE	6
7	↓					SPARE	8
9	SPARE	100	3	60	3	↓	10
11	↓					↓	12
13	↓					SPARE	14
15	SPARE	30	3	15	3	↓	16
17	↓					↓	18
19	↓			20	2	SPARE	20
21	SPARE	40	2			↓	22
23	↓			20	1	RE-CIRCULATION PUMP RCP-900	24
25	SCADA WORK STATION	20	1	20	1	LOUVER W/MOTORIZED DAMPER LV-904	26
27	SPARE	20	1	20	1	SPARE	28
29	SPARE	20	1	20	1	SPARE	30
31	SPARE	20	1	20	1	SPARE	32
33	SPACE	–	–	–	–	SPACE	34
35	SPACE	–	–	–	–	SPACE	36
37	SPACE	–	–	–	–	SPACE	38
39	SPACE	–	–	–	–	SPACE	40
41	SPACE	–	–	–	–	SPACE	42
43	SPACE	–	–	–	–	SPACE	44
45	SPACE	–	–	–	–	SPACE	46
47	SPACE	–	–	–	–	SPACE	48
49	SPACE	–	–	–	–	SPACE	50
51	SPACE	–	–	–	–	SPACE	52
53	SPACE	–	–	–	–	SPACE	54

GENERAL SCHEDULE NOTES:

1. PROVIDE SPARE BREAKERS AS INDICATED.
2. PROVIDE ARC FLASH WARNING LABEL PER SPECIFICATIONS.
3. PROVIDE TYPED PANEL DIRECTORY INDICATING LOADS SERVED.
4. REFER TO ELECTRICAL PLANS FOR GENERAL LOCATIONS OF EQUIPMENT.
5. PROVIDE ALL REQUIRED MOUNTING HARDWARE, BRACKETS, ACCESSORIES, ETC...
6. CONTRACTOR TO BALANCE PROPOSED PANEL LOAD ACROSS ALL PHASES EQUALLY.
7. VERIFY ALL CIRCUIT BREAKER REQUIREMENTS WITH EQUIPMENT MANUFACTURER. PROVIDE AS REQUIRED.
8. COORDINATE FINAL LABELING REQUIREMENTS WITH THE OWNER AND PROVIDE NAMEPLATE PER SPECIFICATIONS.
9. PROVIDE TOTAL NUMBER OF 1P SPACES AS INDICATED. PROVIDE BLOCK OFF PLATES FOR ALL SPACES WHICH ARE NOT UTILIZED.
10. REFER TO ELECTRICAL SINGLE LINE DIAGRAMS, RISER DIAGRAMS, SCHEDULES & SPECIFICATIONS FOR ADDITIONAL INFORMATION/REQUIREMENTS.
11. PROVIDE LUG TERMINATION KITS, OR PIN ADAPTORS AS NECESSARY TO TERMINATE THE NUMBER OF SETS OF CONDUCTORS AND SIZE SHOWN/SPECIFIED.

ACCESSORIES & TRIM:

1. MOUNTING: SURFACE
2. NEMA 1 ENCLOSURE
3. DOOR-IN-DOOR COVER
4. COPPER BUS BARS
5. BASIS OF DESIGN: EATON
6. INTEGRAL SPD
7. INTEGRAL KWHD

PANEL HVP2 CONTROL BUILDING

225 AMP FRAME
225A MCB W/ LSI TRIP UNIT
480Y/277 VOLT 3ϕ, 4W+G
35KAIC RMS SYM

CIRCUIT NUMBER	CIRCUIT SERVED	BREAKER AMP	BREAKER POLE	BREAKER AMP	BREAKER POLE	CIRCUIT SERVED	CIRCUIT NUMBER
1	SURGE PROTECTIVE DEVICE	30	3	125	3	PANEL LVP2 VIA XFMR TR2	2
3	↓					↓	4
5	↓					↓	6
7	ELECTRIC UNIT HEATER EUH-900	20	3	20	3	ELECTRIC UNIT HEATER EUH-901	8
9	↓					↓	10
11	↓					↓	12
13	ELECTRIC UNIT HEATER EUH-902	20	3	100	3	SPARE	14
15	↓					↓	16
17	↓					↓	18
19	SPARE	60	3	30	3	SPARE	20
21	↓					↓	22
23	↓					↓	24
25	SPARE	15	3	40	2	SPARE	26
27	↓					↓	28
29	↓			20	2	SPARE	30
31	SPARE	20	1			↓	32
33	SPARE	20	1	20	1	SPARE	34
35	SPACE	20	1	20	1	SPACE	36
37	SPACE	–	–	–	–	SPACE	38
39	SPACE	–	–	–	–	SPACE	40
41	SPACE	–	–	–	–	SPACE	42

GENERAL SCHEDULE NOTES:

1. PROVIDE SPARE BREAKERS AS INDICATED.
2. PROVIDE ARC FLASH WARNING LABEL PER SPECIFICATIONS.
3. PROVIDE TYPED PANEL DIRECTORY INDICATING LOADS SERVED.
4. REFER TO ELECTRICAL PLANS FOR GENERAL LOCATIONS OF EQUIPMENT.
5. PROVIDE ALL REQUIRED MOUNTING HARDWARE, BRACKETS, ACCESSORIES, ETC...
6. CONTRACTOR TO BALANCE PROPOSED PANEL LOAD ACROSS ALL PHASES EQUALLY.
7. VERIFY ALL CIRCUIT BREAKER REQUIREMENTS WITH EQUIPMENT MANUFACTURER. PROVIDE AS REQUIRED.
8. COORDINATE FINAL LABELING REQUIREMENTS WITH THE OWNER AND PROVIDE NAMEPLATE PER SPECIFICATIONS.
9. PROVIDE TOTAL NUMBER OF 1P SPACES AS INDICATED. PROVIDE BLOCK OFF PLATES FOR ALL SPACES WHICH ARE NOT UTILIZED.
10. REFER TO ELECTRICAL SINGLE LINE DIAGRAMS, RISER DIAGRAMS, SCHEDULES & SPECIFICATIONS FOR ADDITIONAL INFORMATION/REQUIREMENTS.
11. PROVIDE LUG TERMINATION KITS, OR PIN ADAPTORS AS NECESSARY TO TERMINATE THE NUMBER OF SETS OF CONDUCTORS AND SIZE SHOWN/SPECIFIED.

ACCESSORIES & TRIM:

1. MOUNTING: SURFACE
2. NEMA 1 ENCLOSURE
3. DOOR-IN-DOOR COVER
4. COPPER BUS BARS
5. BASIS OF DESIGN: EATON
6. TWO (2) SECTION PANELBOARD (54CKT EACH)

MHE ENGINEERING
33 Airport Center Drive, Suite 202
New Windsor, NY 12553
(845) 567-3100
111 Wheatfield Drive, Suite 1
Milford, PA 18337
(570) 296-2765

JADE STONE ENGINEERING
mechanical, electrical, plumbing
444 VANDUZEE ST. WATERTOWN NY 13601
P: 315.636.4062
jse.engineering

HAZARDOUS MATERIAL NOTE:

THE SERVICES PROVIDED BY MHE, INCLUDING ALL WORK DEPICTED ON MHE PLANS, DO NOT INCLUDE SERVICES RELATED TO THE IDENTIFICATION, CONTROLS OR HANDLING OF HAZARDOUS MATERIALS, INCLUDING SUCH MATERIALS AS ASBESTOS AND LEAD PAINT. ALL TESTING, IDENTIFICATION, ABATEMENT, CONTROLS, AND HANDLING OF HAZARDOUS MATERIALS SHALL BE UNDERTAKEN BY A HAZARDOUS MATERIAL CONSULTANT AND CERTIFIED PROFESSIONALS. IF SUCH MATERIALS HAVE BEEN IDENTIFIED, CONTRACTOR WILL COMMUNICATE DIRECTLY WITH HAZARDOUS MATERIAL PROFESSIONAL FOR THE PERFORMANCE OF ANY WORK ON OR ADJACENT T

INDICATED BY ⑤ ON PLAN SHEETS

EQUIPMENT CONNECTION SCHEDULE

EQUIPMENT			ELECTRICAL LOAD				POWER CONNECTION			CONTROL CONNECTION		DISCONNECT/SAFETY SWITCH				STARTER				REMARKS
SPECIFIC NOTES: 1. WHEN LOCATION IS NOT REFERENCED ON 'E' SHEETS, REFER TO ASSOCIATED CONTRACT DRAWINGS. 2. LOCATIONS SHOWN ARE GENERAL IN NATURE. COORDINATE WITH ALL TRADE CONTRACTORS PRIOR TO ROUGH-IN.												TYPES: A: NON-FUSED B: FUSED M: MOTOR RATED SWITCH R: RECEPTACLE/CORD/PLUG N: NOT REQUIRED C: CKT BREAKER WITHIN SIGHT		SIZES: AF: AMPERE FRAME NF: NON-FUSED AT: FUSE SIZE (RKS, UON)		TYPES: VFD: VARIABLE FREQUENCY DRIVE CMS: COMBINATION MOTOR STARTER WITH DISCONNECT ATL: ACROSS THE LINE, FVNR MAGNETIC STARTER M: MOTOR RATED SWITCH - MANUAL STARTER P: PACKAGED CONTROLLER BY MANUFACTURER LVT: THERMOSTAT				
EQUIPMENT TAG	EQUIPMENT TYPE	LOCATION ON PLAN	FLA	HP (KW)	V	PH	HOMERUN TO	CIRCUIT BREAKER	CONDUCTORS & CONDUIT	HOMERUN / INTERLOCK TO	CONDUCTORS & CONDUIT	DISCONNECT TYPE/SIZE	NEMA ENCLOSURE TYPE	FURNISHED BY (CONTRACT)	INSTALLED BY (CONTRACT)	STARTER TYPE	NEMA ENCLOSURE TYPE	FURNISHED BY (CONTRACT)	INSTALLED BY (CONTRACT)	
EF-900	EXHAUST FAN	CONTROL BUILDING - ELECTRICAL ROOM	4.4	1/10	120	1	LVP2	20A/1P	(2)#12 & #12G, 3/4"C.		LINE VOLTAGE REVERSE ACTING THERMOSTAT	A (UNIT MOUNTED)	1	1M	1M	P	1	1M	1M	
EF-901	EXHAUST FAN	CONTROL BUILDING - MECHANICAL ROOM	4.4	1/10	120	1	LVP2	20A/1P	(2)#12 & #12G, 3/4"C.		LINE VOLTAGE REVERSE ACTING THERMOSTAT	A (UNIT MOUNTED)	1	1M	1M	P	1	1M	1M	
EF-902	EXHAUST FAN	CONTROL BUILDING - WOMEN'S TOILET ROOM	4.4	(128W)	120	1	LVP2	20A/1P	(2)#12 & #12G, 3/4"C.		INTERLOCK WITH ROOM LIGHTING	A (UNIT MOUNTED)	1	1M	1M	P	1	1M	1M	
EF-903	EXHAUST FAN	CONTROL BUILDING - MEN'S TOILET ROOM	4.4	(43W)	120	1	LVP2	20A/1P	(2)#12 & #12G, 3/4"C.		INTERLOCK WITH ROOM LIGHTING	A (UNIT MOUNTED)	1	1M	1M	P	1	1M	1M	
EF-904	EXHAUST FAN	CONTROL BUILDING - JANITOR'S CLOSET	4.4	(80W)	120	1	LVP2	20A/1P	(2)#12 & #12G, 3/4"C.		INTERLOCK WITH ROOM LIGHTING	A (UNIT MOUNTED)	1	1M	1M	P	1	1M	1M	
EUH-900	ELECTRIC UNIT HEATER	CONTROL BUILDING - ELECTRICAL ROOM	4	(3.3KW)	480	3	HVP2	20A/3P	(3)#12 & #12G, 3/4"C.		LOW VOLTAGE THERMOSTAT	A (UNIT MOUNTED)	1	1M	1M	LVT	1	1M	1M	
EUH-901	ELECTRIC UNIT HEATER	CONTROL BUILDING - MECHANICAL ROOM	4	(3.3KW)	480	3	HVP2	20A/3P	(3)#12 & #12G, 3/4"C.		LOW VOLTAGE THERMOSTAT	A (UNIT MOUNTED)	1	1M	1M	LVT	1	1M	1M	
EUH-902	ELECTRIC UNIT HEATER	CONTROL BUILDING - STORAGE ROOM	4	(3.3KW)	480	3	HVP2	20A/3P	(3)#12 & #12G, 3/4"C.		LOW VOLTAGE THERMOSTAT	A (UNIT MOUNTED)	1	1M	1M	LVT	1	1M	1M	
F-900	FURNACE	CONTROL BUILDING - MECHANICAL ROOM	10.1	-	120	1	LVP2	20A/1P	(2)#12 & #12G, 3/4"C.		LOW VOLTAGE THERMOSTAT	M	1	1E	1E	LVT	1	1M	1M	
F-901	FURNACE	CONTROL BUILDING - MECHANICAL ROOM	10.1	-	120	1	LVP2	20A/1P	(2)#12 & #12G, 3/4"C.		LOW VOLTAGE THERMOSTAT	M	1	1E	1E	LVT	1	1M	1M	
LV-900	LOUVER W/MOTORIZED DAMPER	CONTROL BUILDING - ELECTRICAL ROOM	4.4	FRACTIONAL	120	1	LVP2	20A/1P	(2)#12 & #12G, 3/4"C.		INTERLOCK W/ EXHAUST FAN EF-900	-	-	-	-	-	-	-	-	
LV-901	LOUVER W/MOTORIZED DAMPER	CONTROL BUILDING - ELECTRICAL ROOM	4.4	FRACTIONAL	120	1	LVP2	20A/1P	(2)#12 & #12G, 3/4"C.		INTERLOCK W/ EXHAUST FAN EF-900	-	-	-	-	-	-	-	-	
LV-902	LOUVER W/MOTORIZED DAMPER	CONTROL BUILDING - MECHANICAL ROOM	4.4	FRACTIONAL	120	1	LVP2	20A/1P	(2)#12 & #12G, 3/4"C.		INTERLOCK W/ EXHAUST FAN EF-901	-	-	-	-	-	-	-	-	
LV-903	LOUVER W/MOTORIZED DAMPER	CONTROL BUILDING - MECHANICAL ROOM	4.4	FRACTIONAL	120	1	LVP2	20A/1P	(2)#12 & #12G, 3/4"C.		INTERLOCK W/ EXHAUST FAN EF-901	-	-	-	-	-	-	-	-	
LV-904	LOUVER W/MOTORIZED DAMPER	CONTROL BUILDING - STORAGE ROOM	4.4	FRACTIONAL	120	1	LVP2	20A/1P	(2)#12 & #12G, 3/4"C.		INTERLOCK W/ FURNACE F-900 & F-901	-	-	-	-	-	-	-	-	
ACCU-900	AIR COOLED CONDENSING UNIT	CONTROL BUILDING - EXTERIOR	33	-	208	1	LVP2	50A/2P	(3)#6 & #10G, 1-1/2"C.		INTERLOCK W/FURNACE F-900	A (60AF/NF)	4X	1E	1E	P	4X	1M	1M	
ACCU-901	AIR COOLED CONDENSING UNIT	CONTROL BUILDING - EXTERIOR	33	-	208	1	LVP2	50A/2P	(3)#6 & #10G, 1-1/2"C.		INTERLOCK W/FURNACE F-901	A (60AF/NF)	4X	1E	1E	P	4X	1M	1M	
WH-900	PROPANE WATER HEATER	CONTROL BUILDING - MECHANICAL ROOM	4.4	FRACTIONAL	120	1	LVP2	20A/1P	(2)#12 & #12G, 3/4"C.		REFER TO SUBMITTAL DOCUMENTATION	M	1	1E	1E	P	1	1P	1P	
RCP-900	DOMESTIC CIRCULATION PUMP	CONTROL BUILDING - MECHANICAL ROOM	4.4	(270W)	120	1	LVP2	20A/1P	(2)#12 & #12G, 3/4"C.		REFER TO SUBMITTAL DOCUMENTATION	M	1	1E	1E	P	1	1P	1P	

GENERAL SCHEDULE NOTES:

1. CONTRACTOR TO INSTALL STARTER/DISCONNECT ADJACENT TO UNIT, UNLESS OTHERWISE INDICATED. INSTALLATION TO COMPLY WITH NEC ARTICLE 110.26. CONTRACTOR TO PROVIDE ALL NECESSARY STAINLESS STEEL MOUNTING HARDWARE/EQUIPMENT. REFER TO INSTALLATION DETAILS FOR ADDITIONAL INFORMATION. COORDINATE FINAL LOCATIONS WITH ALL TRADE CONTRACTORS PRIOR TO ROUGH-IN.
2. EQUIPMENT FURNISHED BY OTHERS (UNLESS OTHERWISE INDICATED ON DRAWINGS). COORDINATE WITH ASSOCIATED TRADE CONTRACTOR.
3. CONFIRM HP, VOLTAGE AND PHASE CONNECTIONS PRIOR TO ROUGH-IN OF EQUIPMENT. COORDINATION REQUIRED BETWEEN TRADES.
4. STARTERS SHALL BE NEMA STYLE AND SIZED BASED ON ELECTRICAL LOAD DATA LISTED ON SCHEDULE.
5. MOTOR RATED SWITCHES SHALL BE EQUIPPED WITH HEATERS, WHICH SHALL BE SIZED BASED ON NAMEPLATE DATA (TO BE OBTAINED IN FIELD), NOT ON ELECTRICAL LOAD DATA ON SCHEDULE.
6. CIRCUIT BREAKERS INDICATED ON SCHEDULE ABOVE SHALL BE PROVIDED BY THE CONTRACTOR (UNLESS OTHERWISE NOTED ON THE DRAWINGS) IN THE PROPOSED OR EXISTING PANEL (THEY ARE NOT EXISTING BREAKERS, UNLESS INDICATED ON THE PANELBOARD SCHEDULE).
7. NOTE, THIS SCHEDULE DOES NOT INCLUDE THE REQUIRED ELECTRICAL CONNECTIONS FOR PROPOSED INSTRUMENTS, CONTROLLERS, VALVES, ETC.. REFER TO THE SINGLE LINE DIAGRAMS AND RISER DIAGRAMS FOR REQUIRED ELECTRICAL POWER AND CONTROL CONNECTIONS FOR ALL PROPOSED INSTRUMENTS, CONTROLS, VALVES, ETC..
8. CONTRACTOR RESPONSIBLE FOR PROVIDING ALL NECESSARY CONTROL INTERLOCK CIRCUITRY (CONDUIT & CONDUCTORS) FOR AN OVERALL COMPLETE AND OPERABLE SYSTEM. REFER TO HVAC DRAWINGS FOR ADDITIONAL INFORMATION AND COORDINATE FINAL REQUIREMENTS WITH CONTRACT #3.
9. FOR THIS PROJECT, THE FOLLOWING HAS BEEN ASSUMED BY THE ENGINEER:

CONTRACT #1G: GENERAL CONSTRUCTION CONTRACT CONTRACT #1E: ELECTRICAL CONSTRUCTION CONTRACT CONTRACT #1M: MECHANICAL CONSTRUCTION CONTRACT CONTRACT 1P: PLUMBING CONSTRUCTION CONTRACT

MHE ENGINEERING

33 Airport Center Drive, Suite 202
New Windsor, NY 12553
(845) 567-3100

111 Wheatfield Drive, Suite 1
Milford, PA 18337
(570) 296-2765

JADE STONE ENGINEERING
mechanical, electrical, plumbing

444 VANDUZEE ST. WATERTOWN NY 13601
P: 315.536.4062 jse.engineering

HAZARDOUS MATERIAL NOTE:

THE SERVICES PROVIDED BY MHE, INCLUDING ALL WORK DEPICTED ON MHE PLANS, DO NOT INCLUDE SERVICES RELATED TO THE IDENTIFICATION, CONTROLS OR HANDLING OF HAZARDOUS MATERIALS, INCLUDING SUCH MATERIALS AS ASBESTOS AND LEAD PAINT. ALL TESTING, IDENTIFICATION, ABATEMENT, CONTROLS, AND HANDLING OF HAZARDOUS MATERIALS SHALL BE UNDERTAKEN BY A HAZARDOUS MATERIAL CONSULTANT AND CERTIFIED PROFESSIONALS. IF SUCH MATERIALS HAVE BEEN IDENTIFIED, CONTRACTOR WILL COMMUNICATE DIRECTLY WITH HAZARDOUS MATERIAL PROFESSIONAL FOR THE PERFORMANCE OF ANY WORK ON OR ADJACENT TO SAID MATERIALS. IF UNIDENTIFIED MATERIALS OF CONCERN ARE ENCOUNTERED WHILE UNDERTAKING THE WORK SHOWN HEREON, CONTRACTOR SHALL IMMEDIATELY NOTIFY ENGINEER AND OWNER, AND SHALL OBTAIN DIRECTION FROM THE HAZARDOUS MATERIAL CONSULTANT PRIOR TO THE CONTINUATION OF WORK INVOLVING SUSPECTED MATERIAL.

UDIG·NY SAFE DIGGING STARTS HERE
CALL 811

UNAUTHORIZED ADDITION OR ALTERATION OF THIS PLAN IS A VIOLATION OF SECTION 7209(2) OF THE NEW YORK STATE EDUCATION LAW.

ALL PRODUCTION & INTELLECTUAL PROPERTY RIGHT RESERVED ©

CAESARS LANE WWTP
EXPANSION PROJECT
145 CAESARS LN.
NEW WINDSOR, NY 12553

FOR TOWN OF NEW WINDSOR
555 UNION AVE.
NEW WINDSOR, NY 12553

ELECTRICAL SCHEDULES

REVISIONS

NO.	DESCRIPTION	DATE

ISSUED DATE:	21 NOVEMBER, 2024
DESIGN BY:	RRM
DRAWN BY:	CDJ
CHECKED BY:	MGR
REVIEWED BY:	JER

SHEET NO.

E-041

PROJECT # 18-732 PHASE #

GENERAL NEW WORK NOTES:

1. REFER TO E-001 FOR ELECTRICAL LEGENDS, ABBREVIATIONS AND GENERAL PROJECT NOTES.
2. PROPOSED UG DUCT BANKS AND STRUCTURES SHOWN ARE APPROXIMATE IN LOCATION. ROUTE UG DUCT BANKS WITH GENERAL ROUTING AS SHOWN ON PLANS. ROUTE DUCT BANKS AS NECESSARY TO AVOID CONFLICTS WITH SITE CONDITIONS AND PROPOSED PIPING SYSTEMS.
3. DUCT BANKS SHALL NOT BE LOCATED ABOVE OTHER PIPING SYSTEMS EXCEPT WHERE CROSSING. MAINTAIN NESC SEPARATION BETWEEN UTILITIES.
4. REFER TO UNDERGROUND UTILITIES (GENERAL NOTES) ON SHEET E-001 FOR ADDITIONAL INFORMATION.
5. COORDINATE FINAL DUCT BANK LOCATIONS (PRIOR TO ROUGH-IN) WITH APPLICABLE CONTRACTOR AND THE OWNER TO AVOID CONFLICT WITH PROPOSED WORK AND EXISTING CONDITIONS.
6. REFER TO DUCT BANK SCHEDULE FOR ADDITIONAL INFORMATION REGARDING DUCT BANK ROUTING, PURPOSE, AND CONTENTS.
7. PROVIDE A DEDICATED GROUNDING CONDUCTOR FOR ALL ELECTRICAL EQUIPMENT AND ASSOCIATED EQUIPMENT/DEVICES.
8. EQUIPMENT AND DEVICE LOCATIONS ARE SHOWN AS GENERAL IN NATURE. REFER TO GENERAL SHEETS AND COORDINATE WITH APPLICABLE CONTRACTOR FOR EXACT LOCATIONS.
9. CONTRACTOR TO COORDINATE ALL ASPECTS OF SEQUENCE OF CONSTRUCTION WITH THE OWNER AND APPLICABLE CONTRACTOR.
10. REFER TO ELECTRICAL SINGLE LINE DIAGRAMS, FLOOR PLANS, SCHEDULES, DETAILS, & SPECIFICATIONS FOR ADDITIONAL INFORMATION/REQUIREMENTS.
11. REFER TO OVERALL SITE PLANS ON CIVIL/GENERAL SHEETS (APPLICABLE CONTRACTOR) FOR ADDITIONAL SITE INFORMATION.
12. NOT ALL EXISTING/PROPOSED SITE UTILITIES SHOWN FOR CLARITY. REFER TO GENERAL/CIVIL SHEETS FOR ADDITIONAL SITE INFORMATION.
13. CONTRACTOR IS RESPONSIBLE FOR ALL SITE RESTORATION. REFER TO TYPICAL DUCT BANK SECTION DETAILS FOR ADDITIONAL INFORMATION/REQUIREMENTS.
14. CONTRACTOR TO COORDINATE PARKING & LAYDOWN AREA WITH THE OWNER AND APPLICABLE CONTRACTOR.
15. NOT ALL HAND-HOLES AND PULL POINTS SHOWN FOR CLARITY. CONTRACTOR TO PROVIDE HAND-HOLES AND PULL POINTS AS REQUIRED AND PER NEC. CONTRACTOR TO FIELD VERIFY. REFER TO TYPICAL HANDHOLE DETAIL FOR ADDITIONAL INFORMATION/REQUIREMENTS.

SHEET KEY NOTES:

1. CONTRACTOR RESPONSIBLE TO RESTORE ALL DISTURBED SURFACES AS PART OF THIS PROJECT. COORDINATE FINAL REQUIREMENTS WITH THE OWNER AND APPLICABLE CONTRACTOR. REFER TO DUCT BANK SECTION DETAILS FOR ADDITIONAL INFORMATION.
2. CONTRACTOR TO COORDINATE FINAL DUCT BANK ROUTING/REQUIREMENTS WITH EXISTING FIELD CONDITIONS, PROPOSED WORK, OWNER AND APPLICABLE CONTRACTOR PRIOR TO ROUGH-IN TO AVOID CONFLICTS.
3. CONTRACTOR TO PROVIDE HAND HOLE IN GENERAL LOCATION SHOWN. COORDINATE FINAL LOCATION CLOSELY WITH OWNER AND ENGINEER TO AVOID FUTURE DISTRIBUTION STRUCTURE. REFER TO TYPICAL HAND HOLE DETAIL FOR REQUIREMENTS.
4. CONTRACTOR TO PROVIDE HEAVY DUTY FIBERGLASS CABLE RACK AND CABLE RACK SUPPORTS ON EACH INTERIOR WALL OF HANDHOLE. PROVIDE SERVICE LOOP WITHIN EACH CABLE PASSING THRU HANDHOLE. HANDHOLE TO ACT AS PULL POINT. NO SPLICES PERMITTED WITHIN HANDHOLE.
5. CONTRACTOR TO ROUTE ALL PROPOSED CONDUITS ENTERING/LEAVING THE CONTROL BUILDING FROM BENEATH GRADE. AVOID VISIBLE EXTERIOR WALL PENETRATIONS TO GREATEST EXTENT POSSIBLE. CLOSE COORDINATION WITH APPLICABLE CONTRACTOR, OWNER, AND ENGINEER REQUIRED PRIOR TO POURING CONCRETE AND BUILDING FOUNDATION WORK.
6. CONDUITS TO BE ROUTED UNDERNEATH BUILDING SLAB TO FINAL DESTINATION (MCP, OR HVP2). CLOSELY COORDINATE REQUIREMENTS WITH APPLICABLE CONTRACTOR, OWNER, AND ENGINEER.
7. FINAL CONDUIT PENETRATION LOCATION TO BE CLOSELY COORDINATED WITH THE OWNER AND CONTRACT #1G. FOR BIDDING PURPOSES ASSUME CONDUIT PENETRATIONS WILL TAKE PLACE ABOVE GRADE AND THEN ELBOW INTO BUILDING/STRUCTURE. PROVIDE STAINLESS STEEL UNISTRUT AND HARDWARE TO SUPPORT PROPOSED CONDUITS ALONG EXTERIOR WALL. CONTRACTOR TO FIELD VERIFY. REFER TO ELECTRICAL DETAILS FOR ADDITIONAL INFORMATION/REQUIREMENTS.

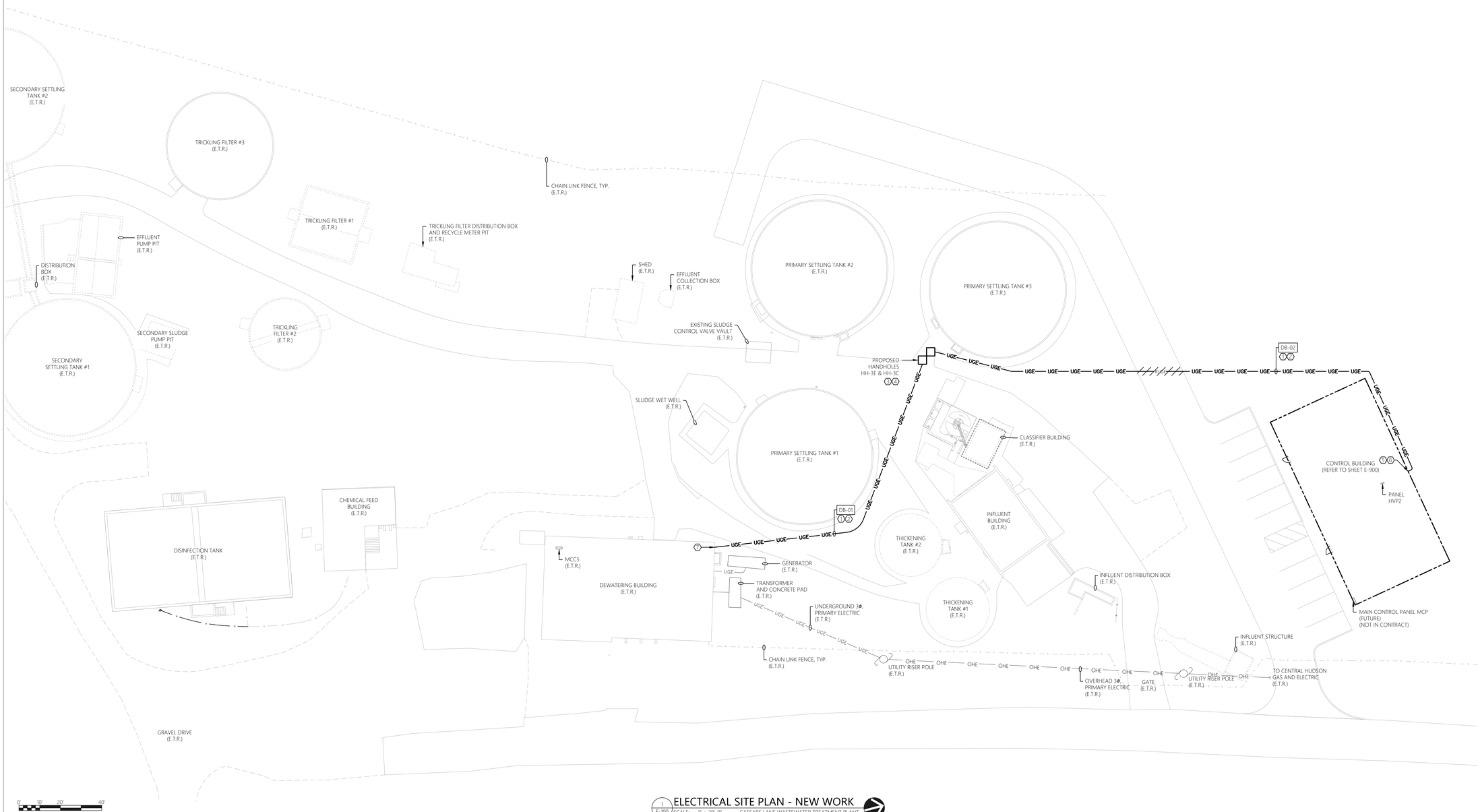

1 E-100 ELECTRICAL SITE PLAN - NEW WORK
SCALE: 1" = 20'-0" CAESARS LANE WASTEWATER TREATMENT PLANT

MHE ENGINEERING
33 Airport Center Drive, Suite 202
New Windsor, NY 12553
(845) 587-3100
111 Wheatfield Drive, Suite 1
Milford, PA 18337
(570) 296-2765

JADE STONE ENGINEERING
mechanical, electrical, plumbing
444 VANDUZEE ST. WATERTOWN NY 13601
P: 315.636.4062 jse.engineering

HAZARDOUS MATERIAL NOTE:

THE SERVICES PROVIDED BY MHE, INCLUDING ALL WORK DEPICTED ON MHE PLANS, DO NOT INCLUDE SERVICES RELATED TO THE IDENTIFICATION, CONTROLS OR HANDLING OF HAZARDOUS MATERIALS, INCLUDING SUCH MATERIALS AS ASBESTOS AND LEAD PAINT. ALL TESTING, IDENTIFICATION, ABATEMENT, CONTROLS, AND HANDLING OF HAZARDOUS MATERIALS SHALL BE UNDERTAKEN BY A HAZARDOUS MATERIAL CONSULTANT AND CERTIFIED PROFESSIONALS. IF SUCH MATERIALS HAVE BEEN IDENTIFIED, CONTRACTOR WILL COMMUNICATE DIRECTLY WITH HAZARDOUS MATERIAL PROFESSIONAL FOR THE PERFORMANCE OF ANY WORK ON OR ADJACENT TO SAID MATERIALS. IF UNIDENTIFIED MATERIALS OF CONCERN ARE ENCOUNTERED WHILE UNDERTAKING THE WORK SHOWN HEREON, CONTRACTOR SHALL IMMEDIATELY NOTIFY ENGINEER AND OWNER, AND SHALL OBTAIN DIRECTION FROM THE HAZARDOUS MATERIAL CONSULTANT PRIOR TO THE CONTINUATION OF WORK INVOLVING SUSPECTED MATERIAL.

UDIG·NY SAFE DIGGING STARTS HERE
CALL 811

UNAUTHORIZED ADDITION OR ALTERATION OF THIS PLAN IS A VIOLATION OF SECTION 7209(2) OF THE NEW YORK STATE EDUCATION LAW.

ALL PRODUCTION & INTELLECTUAL PROPERTY RIGHT RESERVED ©

CAESARS LANE WWTP EXPANSION PROJECT

145 CAESARS LN.
NEW WINDSOR, NY 12553

FOR TOWN OF NEW WINDSOR
555 UNION AVE.
NEW WINDSOR, NY 12553

ELECTRICAL SITE PLAN - NEW WORK

REVISIONS

NO.	DESCRIPTION	DATE

ISSUED DATE:	21 NOVEMBER, 2024
DESIGN BY:	RRM
DRAWN BY:	CDJ
CHECKED BY:	MGR
REVIEWED BY:	JER

SHEET NO.

E-100

PROJECT # 18-732 PHASE #

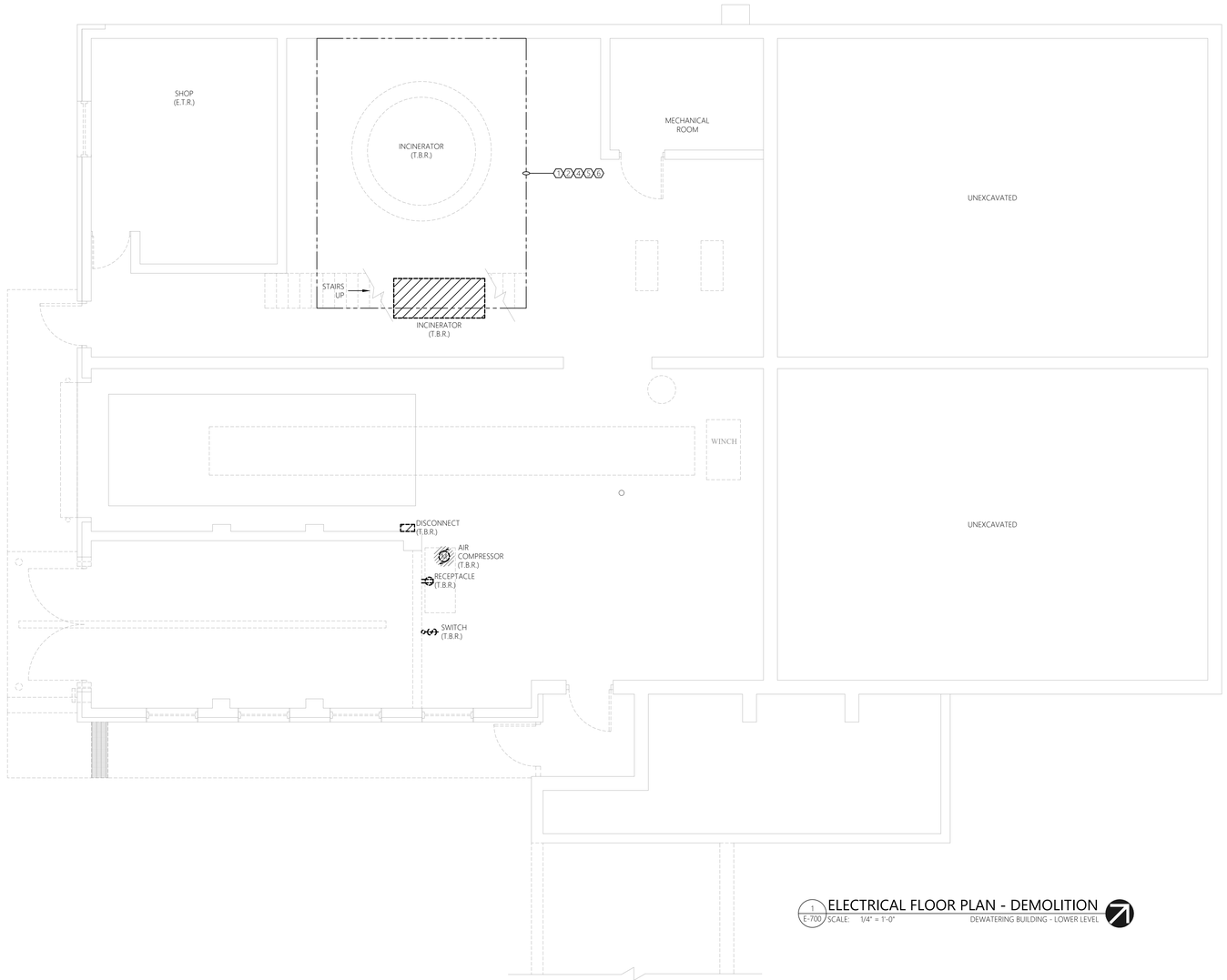

1 E-700 ELECTRICAL FLOOR PLAN - DEMOLITION
SCALE: 1/4" = 1'-0" DEWATERING BUILDING - LOWER LEVEL

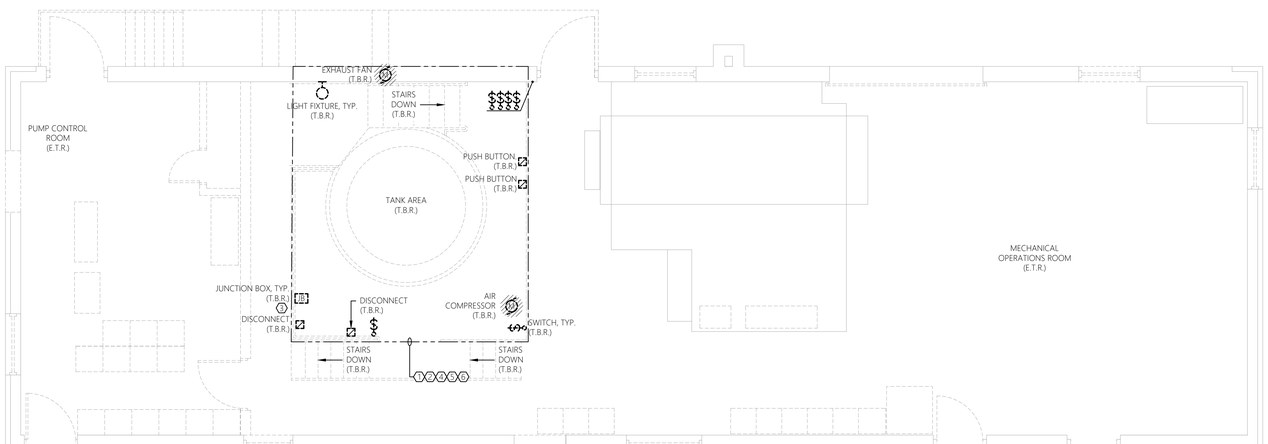

0' 2' 4' 8'
SCALE: 1/4" = 1'-0"

2 E-700 ELECTRICAL FLOOR PLAN - DEMOLITION
SCALE: 1/4" = 1'-0" DEWATERING BUILDING - UPPER LEVEL

GENERAL DEMOLITION NOTES:

MECHANICAL EQUIPMENT & MISC. ELECTRICAL EQUIPMENT:
WHERE INDICATED TO BE DEMOLISHED:
- REFER TO GENERAL CONTRACT DRAWINGS FOR AN ACCURATE DEPICTION OF ALL DEMOLITION REQUIRED AS PART OF THIS CONTRACT.
- REMOVE ALL WIRE (POWER & CONTROLS) & EXPOSED CONDUIT BACK TO SOURCE PANEL, UNLESS OTHERWISE INDICATED, UOI.
- REMOVE ANY ASSOCIATED MOTOR STARTERS, CONTROL STATIONS, &/OR DISCONNECTS, UOI.
- REMOVE CIRCUIT WIRING FROM SOURCE PANEL AND REMOVE ASSOCIATED SOURCE CIRCUIT BREAKER, UOI.
- REMOVE ALL INTERLOCK CIRCUITRY, UOI.
- PROVIDE REVISED TYPED PANELBOARD DIRECTORIES FOR ALL EXISTING TO REMAIN PANELS WHERE CIRCUITS ARE TO BE REMOVED.
- REMOVE ALL ASSOCIATED MOUNTING HARDWARE, BRACKETS, AND EQUIPMENT, UOI.

RECEPTACLES:
WHERE INDICATED TO BE DEMOLISHED:
- REMOVE ALL RECEPTACLES IMPACTED BY WALL MODIFICATIONS AND OVERALL PROJECT IMPROVEMENTS. **NOTE** ALL EXISTING RECEPTACLES MAY NOT BE SHOWN ON THESE DEMOLITION PLANS. MINOR FIELD VERIFICATION REQUIRED.
- REMOVE DEVICE, AND ALL ASSOCIATED WIRE & CONDUIT BACK TO SOURCE OR NEAREST ACTIVE JUNCTION BOX, UOI.

LIGHTING:
WHERE INDICATED TO BE DEMOLISHED:
- REMOVE ALL FIXTURES THROUGHOUT SPACE. **NOTE** ALL EXISTING LIGHTING FIXTURES MAY NOT BE SHOWN ON THESE DEMOLITION PLANS. MINOR FIELD VERIFICATION REQUIRED.
- REMOVE ALL ASSOCIATED WIRING BACK TO SOURCE, UOI.
- REMOVE SWITCHING AND CONTROL DEVICES, UOI.
- REMOVE CONTACTORS ASSOCIATED WITH LOW VOLTAGE SWITCHING DEVICES, UOI.
- DISPOSE OF ALL LAMPS IN ACCORDANCE WITH STATE/FEDERAL AND EPA REQUIREMENTS.

PANELBOARD REMOVAL AND REPLACEMENT:
- REFER TO SINGLE LINE DIAGRAMS FOR SCOPE OF WORK.

CIRCUIT AND FEEDER REMOVAL AND REPLACEMENT:
- MAINTAIN ANY EXISTING NON-IMPACTED PANELBOARDS AND ANY NON-IMPACTED CIRCUITS WHICH ARE EXISTING TO REMAIN.
- WHERE CIRCUITS ARE AFFECTED BY MODIFICATION/REMOVAL ACTIVITIES, PROVIDE NECESSARY CIRCUIT EXTENSIONS AND ALL NECESSARY LABOR/MATERIALS AS NECESSARY TO REPAIR AND RE-CONNECT CIRCUIT(S).
- ANY CIRCUITS/FEEDERS WHICH REQUIRE SHUTDOWN TO ACCOMMODATE WORK SHALL BE COORDINATED WITH THE OWNER WELL IN ADVANCE.

BUILDING/STRUCTURE GROUND SYSTEM:
- CONTRACTOR TO CAREFULLY PROTECT AND MAINTAIN ALL GROUND SYSTEMS ASSOCIATED WITH BUILDINGS/STRUCTURES EXISTING TO REMAIN.
- CONTRACTOR TO REMOVE ALL GROUND SYSTEMS ASSOCIATED WITH BUILDING/STRUCTURES TO BE REMOVED.
- GROUND SYSTEM COMPONENTS MAY INCLUDE, BUT ARE NOT LIMITED TO, GROUNDING CONDUCTORS, JUMPERS, TERMINATIONS, RODS, AND AIR TERMINALS. CONTRACTOR TO FIELD VERIFY EXISTING CONDITIONS PRIOR TO COMMENCEMENT OF DEMOLITION.

HAZARDOUS MATERIAL REMOVAL:
PERFORM WORK FOR REMOVAL AND DISPOSAL OF EQUIPMENT AND MATERIALS CONTAINING TOXIC SUBSTANCES REGULATED UNDER THE FEDERAL TOXIC SUBSTANCES CONTROL ACT (TSCA) IN ACCORDANCE WITH APPLICABLE FEDERAL, STATE, AND LOCAL REGULATIONS. APPLICABLE EQUIPMENT AND MATERIALS INCLUDE, BUT ARE NOT LIMITED TO:
- PCB-CONTAINING ELECTRICAL EQUIPMENT, INCLUDING TRANSFORMERS, CAPACITORS, AND SWITCHES.
- PCB- AND DEHP-CONTAINING LIGHTING BALLASTS.
- MERCURY-CONTAINING LAMPS AND TUBES, INCLUDING FLUORESCENT LAMPS, HIGH INTENSITY DISCHARGE (HID), ARC LAMPS, ULTRA-VIOLET, HIGH PRESSURE SODIUM, MERCURY VAPOR, IGNITRON TUBES, NEON, AND INCANDESCENT.
- CONTRACTOR TO COORDINATE ANY REQUIRED HAZARDOUS MATERIAL REMOVAL WITH THE APPLICABLE CONTRACTOR, OWNER, AND ENGINEER.

GENERAL SHEET NOTES:

1. REFER TO E-001 FOR ELECTRICAL LEGENDS, ABBREVIATIONS, AND GENERAL PROJECT NOTES.
2. ITEMS INDICATED TO BE REMOVED:
   - 2.1. REMOVE ALL CONDUCTORS AND EXPOSED CONDUIT BACK TO SOURCE (UOI).
   - 2.2. REMOVE CIRCUIT WIRING AND CIRCUIT BREAKER FROM SOURCE PANEL (UOI).
   - 2.3. REMOVE ALL ASSOCIATED CONTROL CONDUCTORS, CONDUITS, AND DEVICES (UOI).
   - 2.4. REMOVE ASSOCIATED STARTERS, DISCONNECTS, AND ASSOCIATED CIRCUITRY (UOI).
   - 2.5. REMOVE EQUIPMENT PADS & MOUNTING HARDWARE, BRACKETS, ACCESSORIES, ETC... (UOI).
   - 2.6. REVISE PANELBOARD AND MOTOR CONTROL CENTER DIRECTORIES/NAME PLATES AS CHANGES OCCUR (UOI).
3. THESE DEMOLITION DRAWINGS ARE SCHEMATIC IN NATURE AND ARE BASED ON CURSORY FIELD OBSERVATION AND EXISTING DRAWINGS. IT IS NOT THE INTENTION OF THESE DRAWINGS TO INDICATE EVERY DEVICE/FIXTURE REQUIRING REMOVAL/DEMO RATHER GENERAL SYSTEMS WHICH ARE TO BE REMOVED.
4. CIRCUITS NOT IN AREA OF WORK THAT ARE AFFECTED BY WORK SHALL BE OPERATIONAL DURING PROJECT. PROVIDE TEMPORARY CIRCUITS AS NECESSARY.
5. CIRCUIT, EQUIPMENT, AND DEVICE REMOVAL SHALL NOT AFFECT THE INTEGRITY OR FUNCTIONALITY OF CIRCUITS TO REMAIN. ALL CIRCUITS TO REMAIN SHALL BE MAINTAINED. PROVIDE ALL NECESSARY CIRCUIT MODIFICATIONS AND EXTENSIONS.
6. WHERE REMOVALS LEAVE HOLES AND DAMAGED SURFACES EXPOSED IN THE FINISHED WORK, PATCH AND REPAIR THESE HOLES AND DAMAGED SURFACES TO MATCH ADJACENT FINISHED SURFACES. WHERE NEW WORK IS TO BE APPLIED TO EXISTING SURFACES, PERFORM REMOVALS, AND PATCHING IN A MANNER TO PRODUCE SURFACES SUITABLE FOR RECEIVING NEW WORK. COORDINATE ALL WORK WITH APPLICABLE CONTRACTOR, OWNER, AND ENGINEER.
7. COORDINATE WITH ALL CONTRACT DRAWINGS AND TRADE CONTRACTORS FOR ADDITIONAL EQUIPMENT THAT IS TO BE DEMOLISHED. FOR ALL EQUIPMENT SHOWN/INDICATED FOR REMOVAL, DISCONNECT AND REMOVE ELECTRICAL CIRCUIT INCLUDING CONDUCTORS AND CONDUIT BACK TO SOURCE.
8. NOT ALL EQUIPMENT/DEVICES ARE SHOWN FOR CLARITY. CONTRACTOR SHALL FIELD VERIFY ALL EXISTING CONDITIONS AND REPORT DISCREPANCIES TO ENGINEER PRIOR TO COMMENCEMENT OF DEMOLITION.
9. REFER TO THE ELECTRICAL SINGLE LINE DIAGRAMS, SCHEDULES & DETAILS FOR ADDITIONAL DEMOLITION INFORMATION/REQUIREMENTS.
10. COORDINATE ALL ASPECTS OF SEQUENCE OF REMOVAL WITH THE OWNER AND CONTRACT #1G. REFER TO SPECIFICATIONS AND DEMOLITION SINGLE LINE DIAGRAM FOR ADDITIONAL INFORMATION.
11. WHERE REMOVAL OF CONDUIT SYSTEM IS NOT FEASIBLE, REMOVE ALL CONDUCTORS FROM CONDUIT SYSTEM, CUT FLUSH, CAP CONDUIT SYSTEM, AND ABANDON IN PLACE. FEASIBLE IS DEFINED AS BEING LOCATED WITHIN A CONCRETE DUCT BANK OR CONCRETE SLAB. ALL OTHER INSTANCES TO HAVE THE CONDUIT & CIRCUITRY TO BE REMOVED IN THERE ENTIRETY. FIELD VERIFY AND COORDINATE FINAL REQUIREMENTS WITH THE OWNER, TYPICAL.

SHEET KEY NOTES:

1. CONTRACTOR TO PROVIDE COMPLETE ELECTRICAL DEMOLITION FOR THIS AREA (UNLESS OTHERWISE INDICATED). REMOVE THE FOLLOWING DEVICES INCLUDING BUT NOT LIMITED TO; ALL ELECTRICAL DISTRIBUTION EQUIPMENT, CONTROLLERS, CONTROL PANELS, DISCONNECTS, MOTOR STARTERS, RECEPTACLES, INTERIOR/EXTERIOR LIGHTING, JUNCTION BOXES, BONDING/GROUNDING EQUIPMENT, ELECTRIC VALVES, MOTORS (DISCONNECT & REMOVE BRANCH CIRCUITRY), AND INSTRUMENTATION/CONTROLS. REMOVE ALL ASSOCIATED CIRCUITRY (CONDUIT & CONDUCTORS) BACK TO SOURCE. COORDINATE REMOVAL EFFORTS CLOSELY WITH APPLICABLE CONTRACTOR, OWNER, AND ENGINEER.
2. CONTRACTOR TO CLOSELY COORDINATE THE REMOVAL EFFORTS OF ALL PLANT PROCESS EQUIPMENT/DEVICES SCHEDULED FOR REMOVAL WITH APPLICABLE CONTRACTOR, OWNER, AND ENGINEER. CONTRACTOR TO CLOSELY COORDINATE THE REMOVAL EFFORTS OF ALL HVAC EQUIPMENT SCHEDULED FOR REMOVAL WITH APPLICABLE CONTRACTOR, OWNER, AND ENGINEER. CONTRACTOR TO CLOSELY COORDINATE THE REMOVAL EFFORTS OF ALL PLUMBING EQUIPMENT SCHEDULED FOR REMOVAL WITH APPLICABLE CONTRACTOR, OWNER, AND ENGINEER.
3. JUNCTION BOX IS TO BE REMOVED. NOTE, ALL BOXES AND RACEWAY SYSTEMS ASSOCIATED WITH EQUIPMENT SCHEDULED FOR REMOVAL ARE TO BE REMOVED IN THEIR ENTIRETY.
4. CONTRACTOR TO DISCONNECT & REMOVE ALL EXISTING LIGHT FIXTURES, LIGHT SWITCHES, LIGHTING CONTROL DEVICES, MOUNTING HARDWARE, AND ASSOCIATED COMPONENTS IN THEIR ENTIRETY. REMOVE CIRCUITRY (CONDUIT & CONDUCTORS) BACK TO SOURCE. CONTRACTOR TO FIELD VERIFY.
5. CONTRACTOR TO PROVIDE TEMPORARY LIGHTING INCLUDING ALL CIRCUITING AND CONTROLS FOR A COMPLETE AND OPERABLE TEMPORARY LIGHTING SYSTEM THROUGHOUT THE DURATION OF PROJECT. CONTRACTOR TO COORDINATE FINAL TEMPORARY LIGHTING REQUIREMENTS WITH THE OWNER AND PROVIDE AS NECESSARY. TEMPORARY LIGHTING SYSTEMS TO BE PROVIDED FOR ALL AREAS IN WHICH THE EXISTING LIGHTING SYSTEMS ARE DISTURBED AS PART OF THIS PROJECT.
6. NOTE, CONTRACTOR TO ENSURE ALL ELECTRICAL BRANCH CIRCUITS AND CONDUITS ARE REMOVED IN THIS AREA ASSOCIATED WITH EQUIPMENT SCHEDULED FOR REMOVAL, TO AVOID CONFLICT WITH PROPOSED EQUIPMENT, DUCT WORK, AND PIPING SYSTEMS. COORDINATE ALL EFFORTS CLOSELY WITH APPLICABLE CONTRACTOR, OWNER, AND ENGINEER.

MHE ENGINEERING
33 Airport Center Drive, Suite 202
New Windsor, NY 12553
(845) 587-3100
111 Wheatfield Drive, Suite 1
Milford, PA 18337
(570) 296-2765

JADE STONE ENGINEERING
mechanical, electrical, plumbing
444 VANDUZEE ST. WATERTOWN NY 13601
P: 315.536.4062 jse.engineering

HAZARDOUS MATERIAL NOTE:
THE SERVICES PROVIDED BY MHE, INCLUDING ALL WORK DEPICTED ON MHE PLANS, DO NOT INCLUDE SERVICES RELATED TO THE IDENTIFICATION, CONTROLS OR HANDLING OF HAZARDOUS MATERIALS, INCLUDING SUCH MATERIALS AS ASBESTOS AND LEAD PAINT. ALL TESTING, IDENTIFICATION, ABATEMENT, CONTROLS, AND HANDLING OF HAZARDOUS MATERIALS SHALL BE UNDERTAKEN BY A HAZARDOUS MATERIAL CONSULTANT AND CERTIFIED PROFESSIONALS. IF SUCH MATERIALS HAVE BEEN IDENTIFIED, CONTRACTOR WILL COMMUNICATE DIRECTLY WITH HAZARDOUS MATERIAL PROFESSIONAL FOR THE PERFORMANCE OF ANY WORK ON OR ADJACENT TO SAID MATERIALS. IF UNIDENTIFIED MATERIALS OF CONCERN ARE ENCOUNTERED WHILE UNDERTAKING THE WORK SHOWN HEREON, CONTRACTOR SHALL IMMEDIATELY NOTIFY ENGINEER AND OWNER, AND SHALL OBTAIN DIRECTION FROM THE HAZARDOUS MATERIAL CONSULTANT PRIOR TO THE CONTINUATION OF WORK INVOLVING SUSPECTED MATERIAL.

UDIG·NY SAFE DIGGING STARTS HERE
CALL 811

UNAUTHORIZED ADDITION OR ALTERATION OF THIS PLAN IS A VIOLATION OF SECTION 7209(2) OF THE NEW YORK STATE EDUCATION LAW.

ALL PRODUCTION & INTELLECTUAL PROPERTY RIGHT RESERVED ©

CAESARS LANE WWTP
EXPANSION PROJECT
145 CAESARS LN.
NEW WINDSOR, NY 12553

FOR TOWN OF NEW WINDSOR
555 UNION AVE.
NEW WINDSOR, NY 12553

ELECTRICAL DEMOLITION PLAN - DEWATERING BUILDING

REVISIONS

NO.	DESCRIPTION	DATE

ISSUED DATE:	21 NOVEMBER, 2024
DESIGN BY:	RRM
DRAWN BY:	CDJ
CHECKED BY:	MGR
REVIEWED BY:	JER

SHEET NO.
E-700

PROJECT # 18-732 PHASE #

GENERAL NEW WORK NOTES:

1. REFER TO E-001 FOR ELECTRICAL LEGENDS, ABBREVIATIONS AND GENERAL PROJECT NOTES.
2. PROVIDE A DEDICATED GROUNDING CONDUCTOR FOR ALL ELECTRICAL EQUIPMENT AND ASSOCIATED EQUIPMENT/DEVICES.
3. EQUIPMENT & DEVICE LOCATIONS ARE SHOWN AS GENERAL IN NATURE. REFER TO ALL TRADE CONTRACT DRAWINGS AND COORDINATE WITH ALL TRADE CONTRACTORS, OWNER, AND ENGINEER FOR EXACT LOCATIONS. CLOSE CONTRACTOR COORDINATION REQUIRED.
4. ALL PROPOSED EQUIPMENT LOCATIONS/INSTALLATIONS TO COMPLY WITH NEC ARTICLE 110.26 'SPACES ABOUT ELECTRICAL EQUIPMENT'. CONTRACTOR TO COORDINATE INSTALLATION LOCATIONS OF ALL EQUIPMENT WITH APPLICABLE TRADE CONTRACTOR, OWNER, AND ENGINEER PRIOR TO ROUGH-IN.
5. CONTRATOR TO PROVIDE ALL REQUIRED MOUNTING HARDWARE, EQUIPMENT, BRACKETS, SUPPORTS, ACCESSORIES, ETC... PROVIDE AS STAINLESS STEEL IN CORROSIVE ENVIRONMENTS, EXTERIOR APPLICATIONS, OR WHERE INDICATED ON THE CONTRACT DRAWINGS.
6. REFER TO ELECTRICAL SINGLE LINE DIAGRAMS, SPECIFICATIONS, SCHEDULES, AND DETAILS FOR ADDITIONAL INFORMATION/REQUIREMENTS.
7. CONTRACTOR TO COORDINATE ALL ASPECTS OF SEQUENCE OF CONSTRUCTION WITH OWNER, ENGINEER, AND ALL TRADE CONTRACTORS.
8. ALL EXTERIOR RECEPTACLES TO BE INSTALLED AT A HEIGHT OF 36" A.F.G.
9. CONTRACTOR TO PROVIDE LABEL FOR ALL PROPOSED ELECTRICAL EQUIPMENT AND DEVICES. COORDINATE FINAL LABELING REQUIREMENTS WITH THE OWNER. REFER TO SPECIFICATION SECTION 26 0553 - IDENTIFICATION FOR ELECTRICAL SYSTEMS FOR ADDITIONAL INFORMATION/REQUIREMENTS.
10. CONTRACTOR TO COORDINATE ALL CONDUIT PENETRATIONS AND ROUTING WITH ALL TRADE CONTRACTORS, OWNER, AND ENGINEER PRIOR TO ROUGH-IN TO AVOID CONFLICTS.
11. NOT ALL EQUIPMENT/DEVICES MAY BE SHOWN FOR CLARITY. CONTRACTOR SHALL FIELD VERIFY ALL EXISTING AND PROPOSED CONDITIONS PRIOR TO COMMENCEMENT OF CONSTRUCTION. COORDINATE WITH ALL TRADE CONTRACTORS, OWNER, AND ENGINEER.

SHEET KEY NOTES:

1. CONTRACTOR TO PROVIDE 3/4"Ø x 10' COPPER GROUND ROD. BOND ALL METAL STRUCTURES, EQUIPMENT, AND LIGHTING PROTECTION DOWN CONDUCTOR TO GROUND ROD USING #2 COPPER CONDUCTOR WITHIN RGS CONDUIT. REFER TO TYPICAL LIGHTNING PROTECTION GROUNDING DETAIL AND TYPICAL PANEL GROUNDING DETAIL FOR ADDITIONAL INFORMATION/REQUIREMENTS.
2. LIGHTNING PROTECTION DOWN CONDUCTOR. CONCEAL IN RGS CONDUIT WITHIN EXTERIOR WALL CONSTRUCTION. CONTRACTOR TO WORK WITH CERTIFIED LIGHTNING PROTECTION INSTALLER TO PROVIDE COMPLETE BUILDING LIGHTNING PROTECTION SYSTEM IN ACCORDANCE WITH NFPA. UPON COMPLETION PROVIDE UL MASTER LABEL. REFER TO SPECIFICATION SECTION 26 4113 LIGHTNING PROTECTION FOR ADDITIONAL INFORMATION/REQUIREMENTS.
3. CONTRACTOR TO PROVIDE CONCRETE HOUSEKEEPING PAD BENEATH EQUIPMENT. REFER TO TYPICAL EQUIPMENT PAD DETAIL FOR REQUIREMENTS.
4. FURNACE EMERGENCY SHUTDOWN, TYPICAL OF TWO (2). REFER TO ELECTRICAL DETAILS FOR ADDITIONAL INFORMATION. COORDINATE FINAL LOCATION/REQUIREMENTS WITH APPLICABLE TRADE CONTRACTOR.
5. GROUND RING. GROUND RING TO BE BURIED AT MINIMUM 3 FEET BELOW FINISHED GRADE. GROUND RING TO BE KEPT AT MINIMUM OF 3 FEET AWAY FROM BUILDINGS, STRUCTURES, AND EQUIPMENT AT ALL TIMES. PROVIDE AND INSTALL 3/4"Ø x 10' GROUND RODS AT EACH CORNER OF GROUND RING FOR A TOTAL OF FOUR (4) GROUND RODS. BOND ALL METAL STRUCTURES, EQUIPMENT, AND LIGHTNING PROTECTION DOWN CONDUCTOR TO GROUND RING. ALL GROUND CONDUCTORS SHALL BE #2 COPPER, U.O.N.

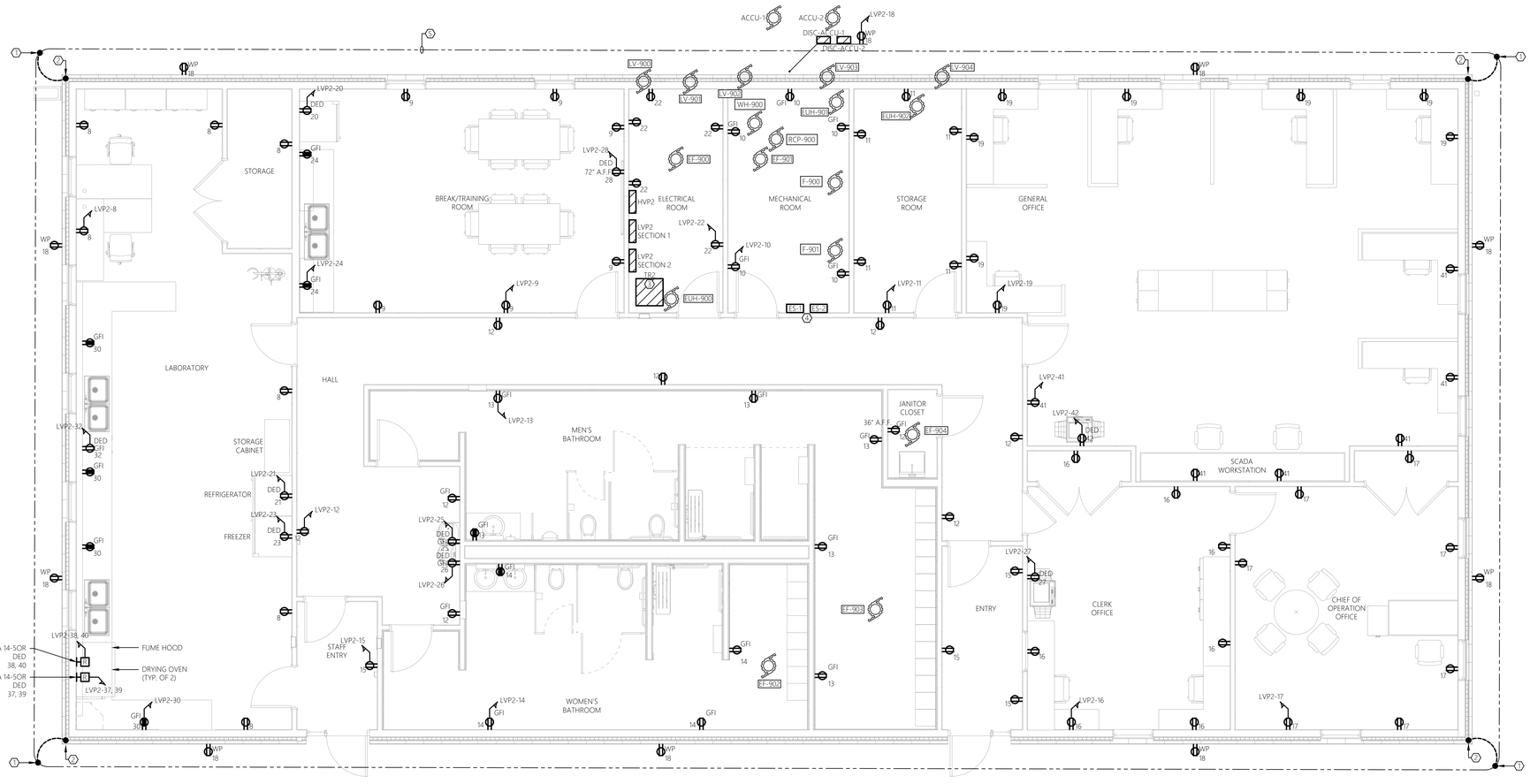

0' 2' 4' 8'
SCALE: 1/4" = 1'-0"

1 E-900 ELECTRICAL POWER PLAN - CONTROL BUILDING
SCALE: 1/4" = 1'-0"

MHE ENGINEERING
33 Airport Center Drive, Suite 202
New Windsor, NY 12553
(845) 587-3100
111 Wheatfield Drive, Suite 1
Milford, PA 18337
(570) 296-2765

JADE STONE ENGINEERING
mechanical, electrical, plumbing
444 VANDUZEE ST. WATERTOWN NY 13601
P: 315.536.4062 jse.engineering

HAZARDOUS MATERIAL NOTE:

THE SERVICES PROVIDED BY MHE, INCLUDING ALL WORK DEPICTED ON MHE PLANS, DO NOT INCLUDE SERVICES RELATED TO THE IDENTIFICATION, CONTROLS OR HANDLING OF HAZARDOUS MATERIALS, INCLUDING SUCH MATERIALS AS ASBESTOS AND LEAD PAINT. ALL TESTING, IDENTIFICATION, ABATEMENT, CONTROLS, AND HANDLING OF HAZARDOUS MATERIALS SHALL BE UNDERTAKEN BY A HAZARDOUS MATERIAL CONSULTANT AND CERTIFIED PROFESSIONALS. IF SUCH MATERIALS HAVE BEEN IDENTIFIED, CONTRACTOR WILL COMMUNICATE DIRECTLY WITH HAZARDOUS MATERIAL PROFESSIONAL FOR THE PERFORMANCE OF ANY WORK ON OR ADJACENT TO SAID MATERIALS. IF UNIDENTIFIED MATERIALS OF CONCERN ARE ENCOUNTERED WHILE UNDERTAKING THE WORK SHOWN HEREON, CONTRACTOR SHALL IMMEDIATELY NOTIFY ENGINEER AND OWNER, AND SHALL OBTAIN DIRECTION FROM THE HAZARDOUS MATERIAL CONSULTANT PRIOR TO THE CONTINUATION OF WORK INVOLVING SUSPECTED MATERIAL.

UDIG·NY SAFE DIGGING STARTS HERE
CALL 811

UNAUTHORIZED ADDITION OR ALTERATION OF THIS PLAN IS A VIOLATION OF SECTION 7209(2) OF THE NEW YORK STATE EDUCATION LAW.

ALL PRODUCTION & INTELLECTUAL PROPERTY RIGHT RESERVED ©

CAESARS LANE WWTP EXPANSION PROJECT
145 CAESARS LN.
NEW WINDSOR, NY 12553

FOR TOWN OF NEW WINDSOR
555 UNION AVE.
NEW WINDSOR, NY 12553

ELECTRICAL POWER PLAN - CONTROL BUILDING

REVISIONS

NO.	DESCRIPTION	DATE

ISSUED DATE:	21 NOVEMBER, 2024
DESIGN BY:	RRM
DRAWN BY:	CDJ
CHECKED BY:	MGR
REVIEWED BY:	JER

SHEET NO.

E-900

PROJECT # 18-732 PHASE #

GENERAL NEW WORK NOTES:

1. REFER TO E-001 FOR ELECTRICAL LEGENDS, ABBREVIATIONS AND GENERAL PROJECT NOTES.
2. PROVIDE A DEDICATED GROUNDING CONDUCTOR FOR ALL ELECTRICAL EQUIPMENT AND ASSOCIATED EQUIPMENT/DEVICES.
3. EQUIPMENT & DEVICE LOCATIONS ARE SHOWN AS GENERAL IN NATURE. REFER TO ALL TRADE CONTRACT DRAWINGS AND COORDINATE WITH ALL TRADE CONTRACTORS, OWNER, AND ENGINEER FOR EXACT LOCATIONS. CLOSE CONTRACTOR COORDINATION REQUIRED.
4. ALL PROPOSED EQUIPMENT LOCATIONS/INSTALLATIONS TO COMPLY WITH NEC ARTICLE 110.26 'SPACES ABOUT ELECTRICAL EQUIPMENT'. CONTRACTOR TO COORDINATE INSTALLATION LOCATIONS OF ALL EQUIPMENT WITH APPLICABLE TRADE CONTRACTOR, OWNER, AND ENGINEER PRIOR TO ROUGH-IN.
5. CONTRATOR TO PROVIDE ALL REQUIRED MOUNTING HARDWARE, EQUIPMENT, BRACKETS, SUPPORTS, ACCESSORIES, ETC... PROVIDE AS STAINLESS STEEL IN CORROSIVE ENVIRONMENTS, EXTERIOR APPLICATIONS, OR WHERE INDICATED ON THE CONTRACT DRAWINGS.
6. REFER TO ELECTRICAL SINGLE LINE DIAGRAMS, SPECIFICATIONS, SCHEDULES, AND DETAILS FOR ADDITIONAL INFORMATION/REQUIREMENTS.
7. CONTRACTOR TO COORDINATE ALL ASPECTS OF SEQUENCE OF CONSTRUCTION WITH OWNER, ENGINEER, AND ALL TRADE CONTRACTORS.
8. CONTRACTOR TO PROVIDE LABEL FOR ALL PROPOSED ELECTRICAL EQUIPMENT AND DEVICES. COORDINATE FINAL LABELING REQUIREMENTS WITH THE OWNER. REFER TO SPECIFICATION SECTION 26 0553 - IDENTIFICATION FOR ELECTRICAL SYSTEMS FOR ADDITIONAL INFORMATION/REQUIREMENTS.
9. CONTRACTOR TO COORDINATE ALL CONDUIT PENETRATIONS AND ROUTING WITH ALL TRADE CONTRACTORS, OWNER, AND ENGINEER PRIOR TO ROUGH-IN TO AVOID CONFLICTS.
10. NOT ALL EQUIPMENT/DEVICES MAY BE SHOWN FOR CLARITY. CONTRACTOR SHALL FIELD VERIFY ALL EXISTING AND PROPOSED CONDITIONS PRIOR TO COMMENCEMENT OF CONSTRUCTION. COORDINATE WITH ALL TRADE CONTRACTORS, OWNER, AND ENGINEER.

SHEET KEY NOTES:

1. ACCESS CARD READER BY OTHERS. THIS CONTRACT TO PROVIDE EMPTY 4"-SQUARE NEMA 4X JUNCTION BOX AND COVER AT CARD READER LOCATION AND 3/4" CONDUIT WITH CAT 6 CABLE BACK TO LOCATION OF SECURITY CONTROL PANEL. TYPICAL OF TWO (2). CAP AND LABEL CONDUIT DESTINATION AT THE SECURITY CONTROL PANEL. COIL 10'-0" SLACK AT EACH END.
2. SECURITY CAMERA BY OTHERS. THIS CONTRACT TO PROVIDE EMPTY 4"-SQUARE NEMA 4X JUNCTION BOX AND COVER AT CAMERA LOCATION AND 3/4" CONDUIT WITH CAT 6 CABLE BACK TO LOCATION OF SECURITY CONTROL PANEL. TYPICAL OF FOUR (4). CAP AND LABEL CONDUIT DESTINATION AT THE SECURITY CONTROL PANEL. COIL 10'-0" SLACK AT EACH END.

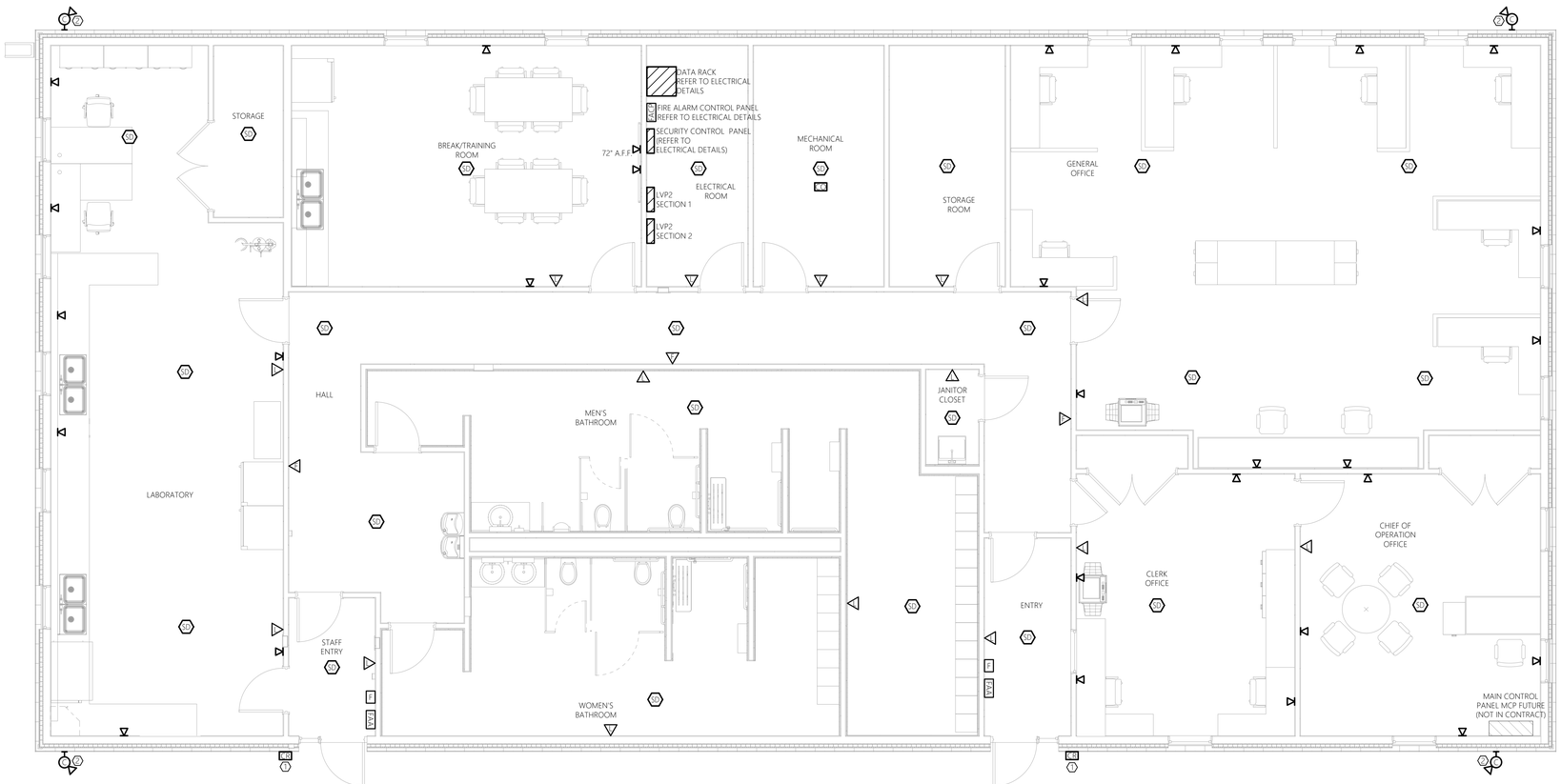

0' 2' 4' 8'
SCALE: 1/4" = 1'-0"

1 E-901 ELECTRICAL SYSTEMS PLAN CONTROL BUILDING
SCALE: 1/4" = 1'-0"

MHE ENGINEERING
33 Airport Center Drive, Suite 202
New Windsor, NY 12553
(845) 587-3100
111 Wheatfield Drive, Suite 1
Milford, PA 18337
(570) 296-2765

JADE STONE ENGINEERING
mechanical, electrical, plumbing
444 VANDUZEE ST. WATERTOWN NY 13601
P: 315.536.4062 jse.engineering

HAZARDOUS MATERIAL NOTE:

THE SERVICES PROVIDED BY MHE, INCLUDING ALL WORK DEPICTED ON MHE PLANS, DO NOT INCLUDE SERVICES RELATED TO THE IDENTIFICATION, CONTROLS OR HANDLING OF HAZARDOUS MATERIALS, INCLUDING SUCH MATERIALS AS ASBESTOS AND LEAD PAINT. ALL TESTING, IDENTIFICATION, ABATEMENT, CONTROLS, AND HANDLING OF HAZARDOUS MATERIALS SHALL BE UNDERTAKEN BY A HAZARDOUS MATERIAL CONSULTANT AND CERTIFIED PROFESSIONALS. IF SUCH MATERIALS HAVE BEEN IDENTIFIED, CONTRACTOR WILL COMMUNICATE DIRECTLY WITH HAZARDOUS MATERIAL PROFESSIONAL FOR THE PERFORMANCE OF ANY WORK ON OR ADJACENT TO SAID MATERIALS. IF UNIDENTIFIED MATERIALS OF CONCERN ARE ENCOUNTERED WHILE UNDERTAKING THE WORK SHOWN HEREON, CONTRACTOR SHALL IMMEDIATELY NOTIFY ENGINEER AND OWNER, AND SHALL OBTAIN DIRECTION FROM THE HAZARDOUS MATERIAL CONSULTANT PRIOR TO THE CONTINUATION OF WORK INVOLVING SUSPECTED MATERIAL.

UDIG·NY SAFE DIGGING STARTS HERE
CALL 811

UNAUTHORIZED ADDITION OR ALTERATION OF THIS PLAN IS A VIOLATION OF SECTION 7209(2) OF THE NEW YORK STATE EDUCATION LAW.

ALL PRODUCTION & INTELLECTUAL PROPERTY RIGHT RESERVED ©

CAESARS LANE WWTP EXPANSION PROJECT
145 CAESARS LN.
NEW WINDSOR, NY 12553

FOR TOWN OF NEW WINDSOR
555 UNION AVE.
NEW WINDSOR, NY 12553

ELECTRICAL SYSTEMS PLAN - CONTROL BUILDING

REVISIONS

NO.	DESCRIPTION	DATE

ISSUED DATE:	21 NOVEMBER, 2024
DESIGN BY:	RRM
DRAWN BY:	CDJ
CHECKED BY:	MGR
REVIEWED BY:	JER

SHEET NO.

E-901

PROJECT # 18-732 PHASE #

GENERAL NEW WORK NOTES:

1. REFER TO E-001 FOR ELECTRICAL LEGENDS, ABBREVIATIONS AND GENERAL PROJECT NOTES.
2. PROVIDE A DEDICATED GROUNDING CONDUCTOR FOR ALL ELECTRICAL EQUIPMENT AND ASSOCIATED EQUIPMENT/DEVICES.
3. EQUIPMENT & DEVICE LOCATIONS ARE SHOWN AS GENERAL IN NATURE. REFER TO ALL TRADE CONTRACT DRAWINGS AND COORDINATE WITH ALL TRADE CONTRACTORS, OWNER, AND ENGINEER FOR EXACT LOCATIONS. CLOSE CONTRACTOR COORDINATION REQUIRED.
4. ALL PROPOSED EQUIPMENT LOCATIONS/INSTALLATIONS TO COMPLY WITH NEC ARTICLE 110.26 'SPACES ABOUT ELECTRICAL EQUIPMENT'. CONTRACTOR TO COORDINATE INSTALLATION LOCATIONS OF ALL EQUIPMENT WITH APPLICABLE TRADE CONTRACTOR, OWNER, AND ENGINEER PRIOR TO ROUGH-IN.
5. CONTRACTOR TO PROVIDE ALL REQUIRED MOUNTING HARDWARE, EQUIPMENT, BRACKETS, SUPPORTS, ACCESSORIES, ETC... PROVIDE AS STAINLESS STEEL IN CORROSIVE ENVIRONMENTS, EXTERIOR APPLICATIONS, OR WHERE INDICATED ON THE CONTRACT DRAWINGS.
6. REFER TO ELECTRICAL SINGLE LINE DIAGRAMS, SPECIFICATIONS, SCHEDULES, AND DETAILS FOR ADDITIONAL INFORMATION/REQUIREMENTS.
7. CONTRACTOR TO COORDINATE ALL ASPECTS OF SEQUENCE OF CONSTRUCTION WITH OWNER, ENGINEER, AND ALL TRADE CONTRACTORS.
8. NOT ALL EQUIPMENT/DEVICES MAY BE SHOWN FOR CLARITY. CONTRACTOR SHALL FIELD VERIFY ALL EXISTING AND PROPOSED CONDITIONS PRIOR TO COMMENCEMENT OF CONSTRUCTION. COORDINATE WITH ALL TRADE CONTRACTORS, OWNER, AND ENGINEER.
9. CONTRACTOR TO PROVIDE LABEL FOR ALL PROPOSED ELECTRICAL EQUIPMENT AND DEVICES. COORDINATE FINAL LABELING REQUIREMENTS WITH THE OWNER. REFER TO SPECIFICATIONS SECTIONS 26 0553 - IDENTIFICATION FOR ELECTRICAL SYSTEMS FOR ADDITIONAL INFORMATION.
10. CONTRACTOR TO COORDINATE ALL CONDUIT PENETRATIONS AND ROUTING WITH ALL TRADE CONTRACTORS, OWNER, AND ENGINEER PRIOR TO ROUGH-IN TO AVOID CONFLICTS.
11. CONTRACTOR TO ADJUST FINAL INTERIOR LIGHT FIXTURE LOCATIONS TO AVOID CONFLICTS WITH EQUIPMENT, PIPING SYSTEMS, AND DUCT WORK. COORDINATE WITH ALL TRADE CONTRACTORS, OWNER, AND ENGINEER PRIOR TO ROUGH-IN.
12. CONTRACTOR TO ADJUST FINAL AIMING ANGLE OF EXTERIOR LIGHT FIXTURES TO LIGHT DESIRED AREAS AND MINIMIZE LIGHT POLLUTION. COORDINATE WITH ALL TRADE CONTRACTORS, OWNER, AND ENGINEER.

SHEET KEY NOTES:

1. CONTRACTOR TO PROVIDE AS WATTSTOPPER RT-200 ASTRONOMICAL TIME SWITCH OR APPROVED EQUAL WITHIN NEMA 1 ENCLOSURE. SWITCH TO CONTROL PROPOSED EXTERIOR WALL MOUNTED LIGHT FIXTURES TYPES 'WP1' & 'WP1E'. PROGRAM TIME SWITCH FOR LIGHTING 'ON' AT ASTRONOMICAL SUNSET AND 'OFF' AT ASTRONOMICAL SUNRISE. FINAL ON/OFF PROGRAMMING PARAMETERS TO BE COORDINATED WITH THE OWNER.
2. CONTRACTOR TO PROVIDE 120V, 20A PHOTO CONTROL WITH ADJUSTABLE SHIELD FOR CONTROL OF EXTERIOR LIGHTING CIRCUIT. INTERLOCK WITH ASTRONOMICAL TIME SWITCH. CONFIRM FINAL LOCATION WITH THE OWNER PRIOR TO ROUGH-IN. INSTALL PER MANUFACTURER'S RECOMMENDATIONS.

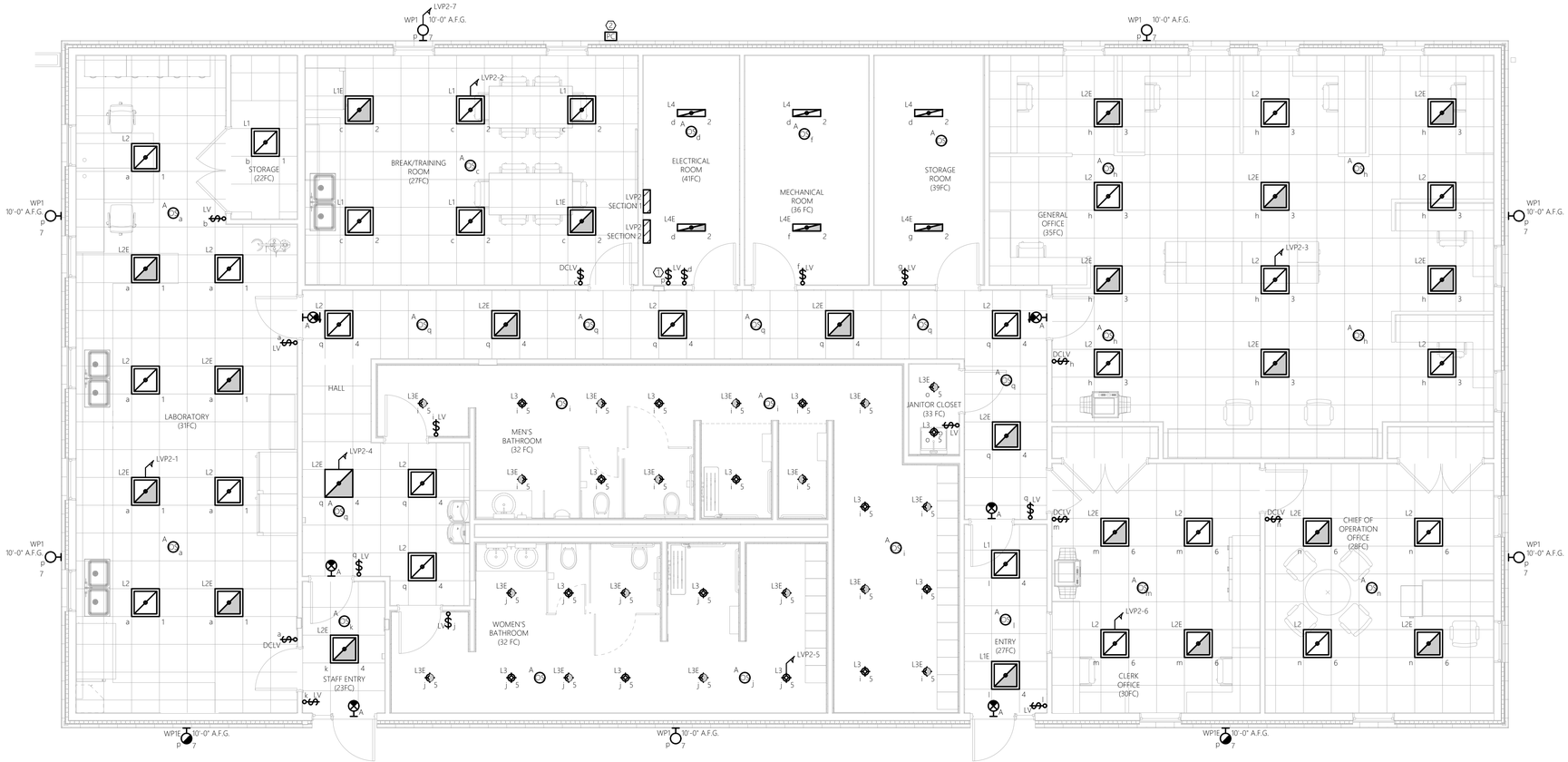

SCALE: 1/4" = 1'-0"

1 E-902 ELECTRICAL LIGHTING PLAN — CONTROL BUILDING
SCALE: 1/4" = 1'-0"

MHE ENGINEERING

33 Airport Center Drive, Suite 202
New Windsor, NY 12553
(845) 587-3100

111 Wheatfield Drive, Suite 1
Milford, PA 18337
(570) 296-2765

JADE STONE ENGINEERING
mechanical, electrical, plumbing

444 VANDUZEE ST. WATERTOWN NY 13601
P: 315.636.4062 jse.engineering

HAZARDOUS MATERIAL NOTE:

THE SERVICES PROVIDED BY MHE, INCLUDING ALL WORK DEPICTED ON MHE PLANS, DO NOT INCLUDE SERVICES RELATED TO THE IDENTIFICATION, CONTROLS OR HANDLING OF HAZARDOUS MATERIALS, INCLUDING SUCH MATERIALS AS ASBESTOS AND LEAD PAINT. ALL TESTING, IDENTIFICATION, ABATEMENT, CONTROLS, AND HANDLING OF HAZARDOUS MATERIALS SHALL BE UNDERTAKEN BY A HAZARDOUS MATERIAL CONSULTANT AND CERTIFIED PROFESSIONALS. IF SUCH MATERIALS HAVE BEEN IDENTIFIED, CONTRACTOR WILL COMMUNICATE DIRECTLY WITH HAZARDOUS MATERIAL PROFESSIONAL FOR THE PERFORMANCE OF ANY WORK ON OR ADJACENT TO SAID MATERIALS. IF UNIDENTIFIED MATERIALS OF CONCERN ARE ENCOUNTERED WHILE UNDERTAKING THE WORK SHOWN HEREON, CONTRACTOR SHALL IMMEDIATELY NOTIFY ENGINEER AND OWNER, AND SHALL OBTAIN DIRECTION FROM THE HAZARDOUS MATERIAL CONSULTANT PRIOR TO THE CONTINUATION OF WORK INVOLVING SUSPECTED MATERIAL.

UDIG·NY SAFE DIGGING STARTS HERE
CALL 811

UNAUTHORIZED ADDITION OR ALTERATION OF THIS PLAN IS A VIOLATION OF SECTION 7209(2) OF THE NEW YORK STATE EDUCATION LAW.

ALL PRODUCTION & INTELLECTUAL PROPERTY RIGHT RESERVED ©

CAESARS LANE WWTP
EXPANSION PROJECT
145 CAESARS LN.
NEW WINDSOR, NY 12553

FOR TOWN OF NEW WINDSOR
555 UNION AVE.
NEW WINDSOR, NY 12553

ELECTRICAL LIGHTING PLAN - CONTROL BUILDING

REVISIONS

NO.	DESCRIPTION	DATE

ISSUED DATE:	21 NOVEMBER, 2024
DESIGN BY:	RRM
DRAWN BY:	CDJ
CHECKED BY:	MGR
REVIEWED BY:	JER

SHEET NO.

E-902

PROJECT # 18-732 PHASE #

PIPING SYMBOLS

	TWO WAY VALVE
	THREE WAY VALVE
	SHUT OFF VALVE
	GLOBE VALVE
	THERMOMETER
	PRESSURE GAGE
	MANUAL AIR VENT
	FLEXIBLE PIPE CONNECTOR
	Y STRAINER
	RELIEF VALVE
	PUMP
	BALANCING VALVE
	UNION
	PIPE DROP
	PIPE RISE
	SANITARY TRAP
	TOP CONNECTION
	BOTTOM CONNECTION
	CAP OR PLUG
	CHECK VALVE
	WEIGHTED CHECK VALVE
	PIPE REDUCER

HVAC LEGEND

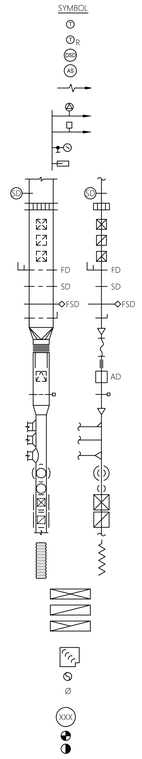

DESCRIPTION

- THERMOSTAT OR TEMPERATURE SENSOR
- REVERSE-ACTING (COOLING) THERMOSTAT OR SENSOR
- DUCT SMOKE DETECTOR
- AIRFLOW PROVING SWITCH/SENSOR
- AIR FLOW
- AUTOMATIC AIR VENT
- PRESSURE/TEMPERATURE PLUG
- PRESSURE GAUGE w/GAUGE COCK
- THERMOMETER
- SMOKE DETECTOR
- AIR MONITORING DEVICE
- SUPPLY AIR DIFFUSER
- RETURN AIR GRILLE
- EXHAUST AIR GRILLE
- FIRE DAMPER
- SMOKE DAMPER
- FIRE SMOKE DAMPER
- MANUAL VOLUME DAMPER
- SQUARE TO ROUND DUCT TRANSITION
- FLEXIBLE CONNECTION
- DUCTWORK SOUND LINING, 1"THICK
- ACCESS DOOR
- MOTOR OPERATED DAMPER
- DUCT TRANSITION
- RECTANGULAR BRANCH TAKE-OFF
- BELL MOUTH BRANCH TAKE-OFF
- ROUND BRANCH TAKE-OFF
- CIRCULAR AIR DIFFUSER
- CIRCULAR DUCT DROP OFF BOTTOM
- SUPPLY AIR DEVICE WITH 2'x2' LAY-IN PANEL
- RETURN AIR DEVICE WITH 2'x2' LAY-IN PANEL
- FLEXIBLE DUCTWORK
- SUPPLY/OUTSIDE AIR DUCT RISER
- RETURN AIR DUCT RISER
- EXHAUST/RELIEF AIR DUCT RISER
- ELBOW w/ DOUBLE THICKNESS TURNING VANES
- ROUND DUCT RISER
- DIAMETER
- CONTROL DEVICE
- POINT OF CONNECTION, NEW TO EXISTING
- POINT OF DISCONNECTION FROM EXISTING

ABBREVIATIONS

@	AT
AAD	AUTOMATIC AIR DAMPER
ABV	ABOVE
AFF	ABOVE FINISHED FLOOR
BDD	BACKDRAFT DAMPER
BHP	BRAKE HORSEPOWER
BTU/HR	BRITISH THERMAL UNITS PER HOUR
CFM	CUBIC FEET PER MINUTE
CONV	CONVECTOR
DIA, Ø	DIAMETER
DN	DOWN
(E)	EXISTING
EA	EXHAUST AIR
EAT	ENTERING AIR TEMPERATURE
EF	EXHAUST FAN
EFF	EFFICIENCY
ESP	EXTERNAL STATIC PRESSURE
EXH	EXHAUST
EXT	EXPANSION TANK
°F	DEGREES FAHRENHEIT
FC	FLEXIBLE CONNECTION
FD	FLOOR DRAIN
FLA	FULL LOAD AMPS
FO	FUEL OIL
FOP	FUEL OIL PUMP
FPM	FEET PER MINUTE
FTR	FIN TUBE RADIATOR
HP	HORSEPOWER
HZ	HERTZ
HX	HEAT EXCHANGER
IN,"	INCH, INCHES
KW	KILOWATT
LAT	LEAVING AIR TEMPERATURE
LV	LOUVER
MBH	THOUSAND BRITISH THERMAL UNITS
MCA	MINIMUM CIRCUIT AMPS
MOP	MAXIMUM OVERCURRENT PROTECTION
NIC	NOT IN CONTRACT
NO	NUMBER
OA	OUTDOOR AIR
%	PERCENT
PH	PHASE
PSI	POUNDS PER SQUARE INCH
RM	ROOM
RPM	REVOLUTIONS PER MINUTE
RX	REMOVE EXISTING
SA	SUPPLY AIR
SF	SUPPLY FAN
SP	STATIC PRESSURE
SPEC	SPECIFICATION
SQ	SQUARE
SQ FT	SQUARE FOOT
SRV	STATIONARY ROOF VENTILATOR
S.S.	STAINLESS STEEL
ΔT	TEMPERATURE DROP
TBR	TO BE REMOVED
TEMP, T	TEMPERATURE
TSP	TOTAL STATIC PRESSURE
TYP	TYPICAL
V	VENT, VOLTS
VD	VOLUME DAMPER
VEL	VELOCITY
(W)	WATT
W/	WITH
WG	WATER GAUGE

DESIGNATIONS

EQUIPMENT

ACCU-	AIR COOLED CONDENSING UNIT
EF-	EXHAUST FAN
EUH-	ELECTRIC UNIT HEATER
F-	FURNACE
LV-	LOUVER

DRAWING

DRAWING NORTH ARROW

SECTION REFERENCE:

AIR DEVICES



GENERAL NOTES

1. WORK SHALL CONFORM TO THE CONTRACT DRAWINGS, SPECIFICATIONS, THE LATEST APPLICABLE CODE OF THE AUTHORITY HAVING JURISDICTION, AND APPLICABLE RULES, REGULATIONS, LAWS, AND ORDINANCES OF FEDERAL AND LOCAL AUTHORITIES.
2. THE SCOPE OF WORK INDICATED IN THESE DOCUMENTS SHALL INCLUDE MECHANICAL AND ELECTRICAL SYSTEMS, FULLY ADJUSTED, TESTED AND READY TO USE. PROVIDE ITEMS NECESSARY TO COMPLETE THE SYSTEMS SUCH AS CUTTING, AND PATCHING ROOFING, CARPENTRY ETC. EXAMINE WORK INDICATED FOR TRADES IN ORDER TO DETERMINE THE EXTENT OF THE WORK REQUIRED TO BE COMPLETED.
3. IT IS THE INTENTION OF THESE DRAWINGS TO CALL FOR FINISHED WORK, TESTED AND READY FOR OPERATION. WHEREVER THE WORD "PROVIDE" IS USED, IT SHALL MEAN "FURNISH AND INSTALL COMPLETE, TESTED, AND READY FOR USE."
4. THE DRAWINGS ARE DIAGRAMMATIC AND DO NOT SHOW EVERY COMPONENT AND/OR ACCESSORY REQUIRED FOR A COMPLETE INSTALLATION. ADDITIONAL DETAILS REQUIRED FOR A COMPLETE INSTALLATION AND NOT SHOWN ON THE DRAWINGS ARE REQUIRED TO BE DEVELOPED BY THE CONTRACTOR. THE CONTRACTOR SHALL PROVIDE ITEMS NECESSARY FOR A PROPERLY WORKING SYSTEM IN COMPLIANCE WITH ACCEPTED INDUSTRY STANDARDS AND MANUFACTURER'S RECOMMENDATIONS.
5. PRIOR TO BID, THE CONTRACTOR MAY VISIT THE SITE AND IDENTIFY ITEMS THAT MAY AFFECT THEIR BID. FAILURE OF THE CONTRACTOR TO VISIT THE SITE TO UNDERSTAND THE COMPLEXITY OF THE PROJECT SHALL NOT ALLOW THE CONTRACTOR TO SUBMIT CONTRACT CHANGES RELATED TO SITE FACILITY CONDITIONS. PRIOR TO THE INSTALLATION, FABRICATION, REMOVAL, OR RELOCATION OF ANY WORK, THE CONTRACTORS SHALL REVIEW THE ACTUAL CONDITIONS UNDER WHICH THE WORK IS TO BE PERFORMED AND SHALL COORDINATE WORK WITH THE PLANS, EXISTING EQUIPMENT AND SYSTEMS, BUILDING STRUCTURE AND WORK OF OTHER TRADES. WHERE CONFLICTS OCCUR, OR IF CONNECTIONS THERETO CAN NOT BE MADE, THE CONTRACTOR SHALL IMMEDIATELY NOTIFY THE ENGINEER PRIOR TO MATERIAL FABRICATION OR INSTALLATION.
6. WHERE THE WORK OF VARIOUS TRADES WILL BE INSTALLED IN CLOSE PROXIMITY TO ONE ANOTHER OR WHERE THERE IS EVIDENCE THAT THE WORK OF ONE TRADE WILL INTERFERE WITH WORK OF OTHER, THE CONTRACTOR SHALL WORK OUT SPACE CONDITIONS TO MAKE A SATISFACTORY ADJUSTMENT. IF THE CONTRACTOR ALLOWS ONE TRADE TO INSTALL HIS WORK BEFORE COORDINATING WITH WORK OF OTHER TRADES THE CONTRACTOR SHALL MAKE NECESSARY CHANGES TO CORRECT THE CONDITIONS IN A MANNER ACCEPTABLE TO THE OWNER AND BEAR THE COST OF SUCH CORRECTIONS. MAINTENANCE ACCESS TO EXISTING AND NEW SYSTEMS AND EQUIPMENT SHALL NOT BE COMPROMISED.
7. THE CONTRACTOR SHALL LOCATE EQUIPMENT WHICH MUST BE SERVICED, OPERATED, OR MAINTAINED IN FULLY ACCESSIBLE POSITION. EQUIPMENT SHALL INCLUDE, BUT NOT BE LIMITED TO, VALVES, MOTORS, CONTROLLERS, DRAIN PANS, ETC. IF REQUIRED FOR ACCESSIBILITY, FURNISH ACCESS DOORS FOR THE PURPOSE. MINOR DEVIATIONS FROM DRAWINGS MAY BE MADE TO ALLOW FOR BETTER ACCESSIBILITY AND ANY CHANGES FOR THAT PURPOSE SHOULD BE PRE-APPROVED BY THE ENGINEER.
8. WORK IN OCCUPIED SPACE SHALL BE COORDINATED WITH THE OWNER, SCHEDULED IN ADVANCE AND ARRANGE TO MINIMIZE DISRUPTION TO THE OWNERS OPERATION.
9. THE CONTRACTOR SHALL LEAVE THE ENTIRE MECHANICAL SYSTEM INSTALLED UNDER THIS CONTRACT IN PROPER WORKING ORDER AND SHALL, WITHOUT CHARGE, REPLACE ANY WORK OR MATERIALS WHICH DEVELOP DEFECTS, WITHIN ONE YEAR FROM THE DATE OF FINAL ACCEPTANCE.
10. THE CONTRACTOR SHALL BE RESPONSIBLE FOR, AND SHALL INCUR FINANCIAL RESPONSIBILITIES FOR, ANY DAMAGES CAUSED BY OR RESULTING FROM DEFECTS IN HIS WORK.
11. PRIOR TO THE BEGINNING OF WORK, THE CONTRACTOR SHALL SUBMIT SHOP DRAWINGS AND SUBMITTALS OF EQUIPMENT FOR REVIEW BY THE ENGINEER. ADDITIONALLY, THE CONTRACTOR SHALL FURNISH A DRAWING SHOWING THE DIMENSIONED LOCATION AND SIZE OF PENETRATIONS FOR ENGINEER'S APPROVAL.
12. CONTRACTOR SHALL COORDINATE FINAL LOCATIONS AND HEIGHTS OF THERMOSTATS WITH OWNER PRIOR TO INSTALLATION. CONTRACTOR SHALL ADHERE TO ADA REQUIREMENTS AND SHALL NOT MOUNT THERMOSTATS GREATER THAN 48 INCHES OFF FINISHED FLOOR AND NO LESS THAN 15 INCHES ABOVE FINISHED FLOOR.
13. WHEREVER PIPES, CONDUITS, OR OTHER ITEMS PASS THROUGH FIRE RATED WALLS AND FLOORS, THE SPACE BETWEEN THE ITEM AND THE MASONRY OR THE SPACE BETWEEN THE ITEM AND THE SLEEVE SHALL BE ADEQUATELY FIRE STOPPED WITH A NON COMBUSTIBLE, NON MELTING UL LISTED SYSTEM IN ACCORDANCE WITH NFPA STANDARDS AND THE MANUFACTURER'S INSTALLATION INSTRUCTIONS.
14. OPENINGS RESULTING FROM DEMOLITION SHALL BE CLOSED, SEALED AND FINISHED TO MATCH EXISTING AND TO MAINTAIN FIRE RATINGS. IMMEDIATELY FOR FIRE SEPARATIONS AND TEMPORARILY FOR OPENINGS TO MAINTAIN FIRE SEPARATION.
15. PROVIDE REPAIR OR REPLACEMENT OF WALLS, CEILINGS, FLOORS, ROOFS ETC. REQUIRED FOR DEMOLITION OR NEW WORK, REPAIR OR REPLACEMENT TO MATCH EXISTING & ADJACENT FINISHES. CONTRACTOR SHALL PATCH AND FINISH DAMAGED AREA TO NEAREST WALL CORNER.
16. FINISHES DAMAGED DURING THE PROJECT SHALL BE REPAIRED TO MATCH EXISTING.
17. WORK SHALL BE PERFORMED IN ACCORDANCE WITH NFPA 70, THE NATIONAL ELECTRICAL CODE, THE NATIONAL ELECTRICAL SAFETY CODE, INTERNATIONAL MECHANICAL CODE, OSHA AND NATIONAL SAFETY CODE REQUIREMENTS.
18. SHOULD ANY OUTAGES BE REQUIRED IN THE COURSE OF THIS PROJECT, THE CONTRACTOR SHALL COORDINATE SUCH OUTAGES WITH THE PROJECT MANAGER OR DESIGNATED REPRESENTATIVE, SCHEDULING ANY OUTAGES DURING THE NON WORKING HOURS, SO AS NOT TO EFFECT FACILITY OPERATIONS, 72 HOURS NOTICE WILL BE REQUIRED PRIOR TO ANY OUTAGE. NO OUTAGE MAY BE EXECUTED PRIOR TO APPROVAL OF THE OWNER'S DESIGNATED REPRESENTATIVE AND THE FACILITY MANAGER.
19. ALL ROOF WORK SHALL BE PERFORMED BY A CERTIFIED ROOF INSPECTOR. ROOF OPENINGS BEING REUSED SHALL BE CAPPED UNTIL REPLACEMENT EQUIPMENT IS INSTALLED.
20. DUCT DIMENSIONS SHOWN ON DRAWINGS ARE SHOWN AS "SIDE SEEN" X "SIDE NOT SEEN" AND INDICATE CLEAR INSIDE DIMENSIONS. ROUND DUCT MAY BE SUBSTITUTED FOR RECTANGULAR DUCT, AS APPROVED, PROVIDING CROSS-SECTIONAL AREA IS MAINTAINED. SUBSTITUTE SIZES ACCORDING TO THE TABLE OF EQUIVALENT RECTANGULAR DUCT DIMENSIONS, ASHRAE HANDBOOK OF FUNDAMENTALS. FIELD VERIFY CLEARANCE FOR ROUND DUCT IN LIEU OF RECTANGULAR.
21. COORDINATE WALL AND ROOF PENETRATIONS WITH THE GENERAL CONTRACTOR.

MHE ENGINEERING

33 Airport Center Drive, Suite 202
New Windsor, NY 12553
(845) 567-3100

111 Wheatfield Drive, Suite 1
Milford, PA 18337
(570) 296-2765

JADE STONE ENGINEERING
mechanical, electrical, plumbing

444 VANDUZEE ST. WATERTOWN NY 13601
P: 315.536.4062 jse.engineering

HAZARDOUS MATERIAL NOTE:

THE SERVICES PROVIDED BY MHE, INCLUDING ALL WORK DEPICTED ON MHE PLANS, DO NOT INCLUDE SERVICES RELATED TO THE IDENTIFICATION, CONTROLS OR HANDLING OF HAZARDOUS MATERIALS, INCLUDING SUCH MATERIALS AS ASBESTOS AND LEAD PAINT. ALL TESTING, IDENTIFICATION, ABATEMENT, CONTROLS, AND HANDLING OF HAZARDOUS MATERIALS SHALL BE UNDERTAKEN BY A HAZARDOUS MATERIAL CONSULTANT AND CERTIFIED PROFESSIONALS. IF SUCH MATERIALS HAVE BEEN IDENTIFIED, CONTRACTOR WILL COMMUNICATE DIRECTLY WITH HAZARDOUS MATERIAL PROFESSIONAL FOR THE PERFORMANCE OF ANY WORK ON OR ADJACENT TO SAID MATERIALS. IF UNIDENTIFIED MATERIALS OF CONCERN ARE ENCOUNTERED WHILE UNDERTAKING THE WORK SHOWN HEREON, CONTRACTOR SHALL IMMEDIATELY NOTIFY ENGINEER AND OWNER, AND SHALL OBTAIN DIRECTION FROM THE HAZARDOUS MATERIAL CONSULTANT PRIOR TO THE CONTINUATION OF WORK INVOLVING SUSPECTED MATERIAL.

UDIG·NY
SAFE DIGGING STARTS HERE
CALL 811

UNAUTHORIZED ADDITION OR ALTERATION OF THIS PLAN IS A VIOLATION OF SECTION 7209(2) OF THE NEW YORK STATE EDUCATION LAW.

ALL PRODUCTION & INTELLECTUAL PROPERTY RIGHT RESERVED ©

CAESARS LANE WWTP
EXPANSION PROJECT
145 CAESARS LN.
NEW WINDSOR, NY 12553

FOR TOWN OF NEW WINDSOR
555 UNION AVE.
NEW WINDSOR, NY 12553

MECHANICAL LEGENDS, ABBREVIATIONS, & NOTES

REVISIONS

NO.	DESCRIPTION	DATE

ISSUED DATE:	21 NOVEMBER, 2024
DESIGN BY:	RJK
DRAWN BY:	CDJ
CHECKED BY:	RJK
REVIEWED BY:	RJK

SHEET NO.

M-001

PROJECT # 18-732 PHASE #

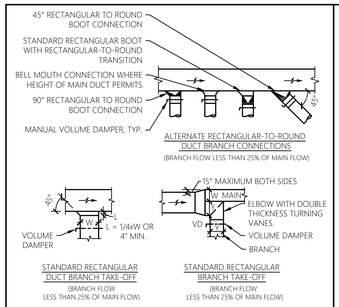

DUCTWORK DETAILS

SCALE: NTS

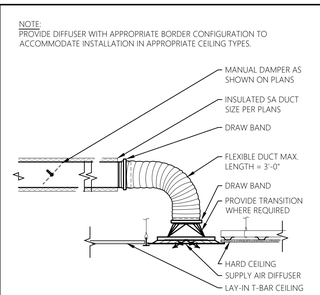

CEILING DIFFUSER DETAIL

SCALE: NTS

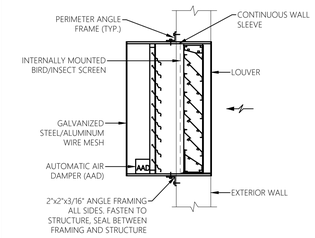

LOUVER WITH AAD DETAIL

SCALE: NTS

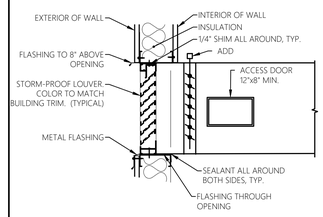

LOUVER DETAIL

SCALE: NTS

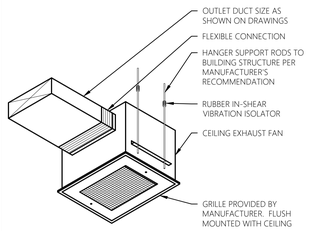

CEILING EXHAUST FAN DETAIL

SCALE: NTS

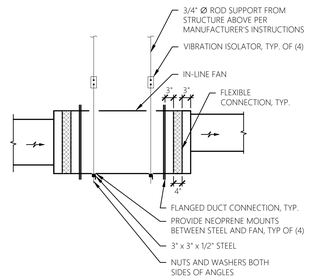

IN-LINE EXHAUST FAN DETAIL

SCALE: NTS

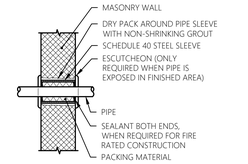

NOTE:

1. THIS DETAIL APPLIES TO BOTH INSULATED AND NON-INSULATED PIPE.
2. FOR FIRE RATED CONSTRUCTION PROVIDE APPROPRIATE APPROVED THROUGH-PENETRATION FIRESTOP ASSEMBLY TO MAINTAIN THE FIRE RATING OF THE WALL ASSEMBLY.

PIPE THRU WALL DETAIL

SCALE: NTS

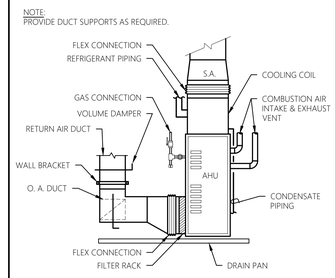

FURNACE DETAIL

SCALE: NTS

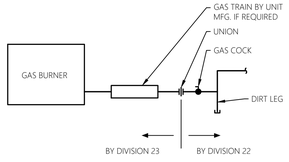

GAS CONNECTION DETAIL

SCALE: NTS

NOTE:
ALL REFRIGERANT PIPING SHALL BE SIZED AND INSTALLED IN STRICT COMPLIANCE WITH THE UNIT MANUFACTURER'S PRINTED INSTRUCTIONS.

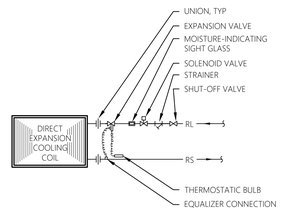

DX COIL DETAIL

SCALE: NTS

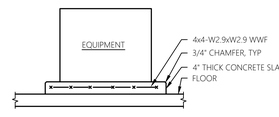

NOTE:

1. NEW PAD SHALL BE 6" LARGER THAN EQUIPMENT ON EACH SIDE.
2. EXISTING PAD SHALL BE CLEANED AND ROUGHENED. APPLY AN EPOXY BONDING AGENT TO CONTACT SURFACE.

HOUSE KEEPING PAD DETAIL

SCALE: NTS

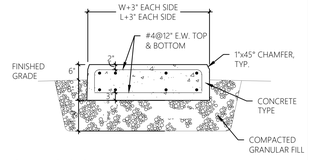

GENERAL NOTES, EQUIPMENT PAD DETAIL:

1. L = LENGTH OF EQUIPMENT
2. W = WIDTH OF EQUIPMENT
3. ANCHOR EQUIPMENT TO PAD PER MANUFACTURERS REQUIREMENTS

EQUIPMENT PAD DETAIL

SCALE: NTS

MHE ENGINEERING

33 Airport Center Drive, Suite 202
New Windsor, NY 12553
(845) 587-3100

111 Wheatfield Drive, Suite 1
Milford, PA 18337
(570) 296-2765

JADE STONE ENGINEERING
mechanical, electrical, plumbing

444 VANDUZEE ST. WATERTOWN NY 13601
P: 315.636.4062 jse.engineering

HAZARDOUS MATERIAL NOTE:

THE SERVICES PROVIDED BY MHE, INCLUDING ALL WORK DEPICTED ON MHE PLANS, DO NOT INCLUDE SERVICES RELATED TO THE IDENTIFICATION, CONTROLS OR HANDLING OF HAZARDOUS MATERIALS, INCLUDING SUCH MATERIALS AS ASBESTOS AND LEAD PAINT. ALL TESTING, IDENTIFICATION, ABATEMENT, CONTROLS, AND HANDLING OF HAZARDOUS MATERIALS SHALL BE UNDERTAKEN BY A HAZARDOUS MATERIAL CONSULTANT AND CERTIFIED PROFESSIONALS. IF SUCH MATERIALS HAVE BEEN IDENTIFIED, CONTRACTOR WILL COMMUNICATE DIRECTLY WITH HAZARDOUS MATERIAL PROFESSIONAL FOR THE PERFORMANCE OF ANY WORK ON OR ADJACENT TO SAID MATERIALS. IF UNIDENTIFIED MATERIALS OF CONCERN ARE ENCOUNTERED WHILE UNDERTAKING THE WORK SHOWN HEREON, CONTRACTOR SHALL IMMEDIATELY NOTIFY ENGINEER AND OWNER, AND SHALL OBTAIN DIRECTION FROM THE HAZARDOUS MATERIAL CONSULTANT PRIOR TO THE CONTINUATION OF WORK INVOLVING SUSPECTED MATERIAL.

UDIG·NY SAFE DIGGING STARTS HERE
CALL 811

UNAUTHORIZED ADDITION OR ALTERATION OF THIS PLAN IS A VIOLATION OF SECTION 7209(2) OF THE NEW YORK STATE EDUCATION LAW.

ALL PRODUCTION & INTELLECTUAL PROPERTY RIGHT RESERVED ©

CAESARS LANE WWTP
EXPANSION PROJECT
145 CAESARS LN.
NEW WINDSOR, NY 12553

FOR TOWN OF NEW WINDSOR
555 UNION AVE.
NEW WINDSOR, NY 12553

MECHANICAL DETAILS

REVISIONS

NO.	DESCRIPTION	DATE

ISSUED DATE:	21 NOVEMBER, 2024
DESIGN BY:	RJK
DRAWN BY:	CDJ
CHECKED BY:	RJK
REVIEWED BY:	RJK

SHEET NO.

M-030

PROJECT # 18-732 PHASE #

FURNACE SCHEDULE

UNIT TAG	LOCATION	SERVICE	SA CFM	OA CFM (MIN)	ESP (IN WG)	ELECTRICAL				DX COOLING COIL	GAS HEATING (PROPANE)				BASIS OF DESIGN MANUFACTURER	BASIS OF DESIGN MODEL NUMBER	REMARKS
						MOP	VOLTS	PHASE	FLA	NOMINAL TONNAGE	INPUT MBH	OUTPUT MBH	RISE (°F)	AFUE			
F-900	CONTROL BUILDING	CONTROL BUILDING	1450	170	0.8	15	120	1	10.1	4	88	85	80	97	COMFORT-AIRE	GUH97M	1 2
F-901	CONTROL BUILDING	CONTROL BUILDING	1475	170	0.8	15	120	1	10.1	4	88	85	80	97	COMFORT-AIRE	GUH97M	1 2

1. PROVIDE WITH LP CONVERSION KIT, COOLING COIL, LOW VOLTAGE HONEYWELL PRESTIGE 2.0 THERMOSTAT, AND CONCENTRIC VENT KIT. COORDINATE ALL CIRCUITRY WITH CONTRACT #1E.
2. GAS INLET SUPPLY PRESSURE: 11" W.C. MINIMUM, 13" W.C. MAXIMUM. PROVIDE REGULATOR AS NECESSARY.

EXHAUST FAN SCHEDULE

UNIT TAG	LOCATION	SERVICE	ARRANGEMENT	DRIVE	CFM	SP (IN WG)	FAN RPM	MAX SONES	WALL / ROOF OPENING SIZE	ELECTRICAL			BASIS OF DESIGN MANUFACTURER	BASIS OF DESIGN MODEL NUMBER	REMARKS
										HP (W)	VOLTS	PHASE			
EF-900	CONTROL BUILDING	ELECTRICAL ROOM	IN-LINE	DIRECT	500	0.3	1522	-	-	1/10	120	1	GREENHECK	SQ-90-VG	1 2
EF-901	CONTROL BUILDING	MECHANICAL ROOM	IN-LINE	DIRECT	500	0.3	1522	-	-	1/10	120	1	GREENHECK	SQ-90-VG	1 2
EF-902	CONTROL BUILDING	WOMENS BATHROOM	CEILING	DIRECT	120	0.3	838	2	-	(128)	120	1	GREENHECK	SP-B150	3 4
EF-903	CONTROL BUILDING	MENS BATHROOM	CEILING	DIRECT	190	0.3	841	2	-	(43)	120	1	GREENHECK	SP-A200	3 4
EF-904	CONTROL BUILDING	JANITORS CLOSET	CEILING	DIRECT	70	0.3	712	1	-	(80)	120	1	GREENHECK	SP-B110	3 4

1. PROVIDE WITH SPEED CONTROLLER, DISCONNECT SWITCH, VIBRATION ISOLATORS, AND INLET GUARD. COORDINATE ALL CIRCUITRY WITH CONTRACT #1E.
2. CONTROL BY LINE VOLTAGE REVERSE-ACTING (COOLING) THERMOSTAT. UPON A RISE IN TEMPERATURE ABOVE 85°F (ADJUSTABLE), FAN SHALL ENABLE.
3. PROVIDE WITH SPEED CONTROLLER, DISCONNECT SWITCH, WALL LOUVER DISCHARGE (10X3 W/ BACKDRAFT DAMPER), AND VIBRATION ISOLATORS. COORDINATE ALL CIRCUITRY WITH CONTRACT #1E.
4. CONTROL BY WALL SWITCH (SWITCH BY CONTRACT #1E).

AIR COOLED CONDENSING UNIT SCHEDULE

UNIT TAG	LOCATION	SERVICE	REFRIGERANT TYPE	AMBIENT TEMP (°F)	COMPRESSORS			FANS		ELECTRICAL				BASIS OF DESIGN MANUFACTURER	BASIS OF DESIGN MODEL NUMBER	REMARKS
					NO.	TYPE	TONS	NO.	HP (EACH)	VOLTS	PHASE	MCA	MOP			
ACCU-900	GROUND	F-900	R-410A	95	1	SCROLL	4	1	1/4	208	1	33	50	COMFORT-AIRE	RSG15	1
ACCU-901	GROUND	F-901	R-410A	95	1	SCROLL	4	1	1/4	208	1	33	50	COMFORT-AIRE	RSG15	1

1. PROVIDE WITH LOW AMBIENT CONTROL KIT. CONNECT TO ASSOCIATED FURNACE. PROVIDE W/ HARD START KIT. COORDINATE ALL CIRCUITRY WITH CONTRACT #1E.

LOUVER SCHEDULE

UNIT TAG	LOCATION	SERVICE	WIDTH	HEIGHT	CFM	FREE AREA (SQ FT)	FACE VELOCITY (FPM)	BIRD SCREEN	BASIS OF DESIGN MANUFACTURER	BASIS OF DESIGN MODEL NUMBER	REMARKS
LV-900	CONTROL BUILDING	INTAKE	18	18	500	0.84	596	YES	GREENHECK	ESD-435	1 2 4
LV-901	CONTROL BUILDING	EXHAUST	18	18	500	0.84	596	YES	GREENHECK	ESD-435	1 2 3
LV-902	CONTROL BUILDING	EXHAUST	18	18	500	0.84	596	YES	GREENHECK	ESD-435	1 2 3
LV-903	CONTROL BUILDING	INTAKE	18	18	500	0.84	596	YES	GREENHECK	ESD-435	1 2 4
LV-904	CONTROL BUILDING	INTAKE	18	18	340	0.84	385	YES	GREENHECK	ESD-435	1 2 3

1. WITH FACTORY PROVIDED 120V AAD. COORDINATE INTERLOCK CIRCUITING WITH CONTRACT #1E.
2. PROVIDE WITH 1-1/2" EXTERIOR PERIMETER FLANGE AND PERIMETER CLIP ANGLES.
3. INSTALL CLOSE TO CEILING STRUCTURE.
4. INSTALL ABOVE BRICK COURSING (APPROXIMATELY 36" AFF).

ELECTRIC UNIT HEATER SCHEDULE

UNIT TAG	LOCATION	AIRFLOW DIRECTION	KW	SUPPLY CFM	ELECTRICAL			BASIS OF DESIGN MANUFACTURER	BASIS OF DESIGN MODEL NUMBER	REMARKS
					VOLTS	PHASE	AMPS			
EUH-900	ELECTRICAL ROOM	HORIZONTAL	3.3	400	480	3	4	TRANE	UHEC	1
EUH-901	MECHANICAL ROOM	HORIZONTAL	3.3	400	480	3	4	TRANE	UHEC	1
EUH-902	STORAGE ROOM	HORIZONTAL	3.3	400	480	3	4	TRANE	UHEC	1

1. PROVIDE WITH BUILT-IN 24V CONTROL TRANSFORMER AND CIRCUIT, WALL MOUNTED 24V THERMOSTAT, UNIT MOUNTED DISCONNECT SWITCH, AND MOUNTING BRACKET. COORDINATE ALL CIRCUITRY WITH CONTRACT #1E.

AIR INLET AND OUTLET SCHEDULE

TYPE	DESCRIPTION	SERVICE	FACE SIZE (NECK SIZE)	MOUNTING TYPE	BASIS OF DESIGN MANUFACTURER AND MODEL	REMARKS
S1	DIFFUSER	SUPPLY	24X24	LAY-IN	PRICE SCD	1
R1	GRILLE	RETURN	24X24/12X12	LAY-IN	PRICE 80 SEREIS	1

1. PROVIDE WITH BALANCING DAMPER

MHE ENGINEERING

33 Airport Center Drive, Suite 202
New Windsor, NY 12553
(845) 587-3100

111 Wheatfield Drive, Suite 1
Milford, PA 18337
(570) 296-2765

JADE STONE ENGINEERING
mechanical, electrical, plumbing

444 VANDUZEE ST. WATERTOWN NY 13601
P: 315.636.4062 jse.engineering

HAZARDOUS MATERIAL NOTE:
THE SERVICES PROVIDED BY MHE, INCLUDING ALL WORK DEPICTED ON MHE PLANS, DO NOT INCLUDE SERVICES RELATED TO THE IDENTIFICATION, CONTROLS OR HANDLING OF HAZARDOUS MATERIALS, INCLUDING SUCH MATERIALS AS ASBESTOS AND LEAD PAINT. ALL TESTING, IDENTIFICATION, ABATEMENT, CONTROLS, AND HANDLING OF HAZARDOUS MATERIALS SHALL BE UNDERTAKEN BY A HAZARDOUS MATERIAL CONSULTANT AND CERTIFIED PROFESSIONALS. IF SUCH MATERIALS HAVE BEEN IDENTIFIED, CONTRACTOR WILL COMMUNICATE DIRECTLY WITH HAZARDOUS MATERIAL PROFESSIONAL FOR THE PERFORMANCE OF ANY WORK ON OR ADJACENT TO SAID MATERIALS. IF UNIDENTIFIED MATERIALS OF CONCERN ARE ENCOUNTERED WHILE UNDERTAKING THE WORK SHOWN HEREON, CONTRACTOR SHALL IMMEDIATELY NOTIFY ENGINEER AND OWNER, AND SHALL OBTAIN DIRECTION FROM THE HAZARDOUS MATERIAL CONSULTANT PRIOR TO THE CONTINUATION OF WORK INVOLVING SUSPECTED MATERIAL.

UDIG·NY SAFE DIGGING STARTS HERE
CALL 811

UNAUTHORIZED ADDITION OR ALTERATION OF THIS PLAN IS A VIOLATION OF SECTION 7209(2) OF THE NEW YORK STATE EDUCATION LAW.

ALL PRODUCTION & INTELLECTUAL PROPERTY RIGHT RESERVED ©

CAESARS LANE WWTP
EXPANSION PROJECT
145 CAESARS LN.
NEW WINDSOR, NY 12553

FOR TOWN OF NEW WINDSOR
555 UNION AVE.
NEW WINDSOR, NY 12553

MECHANICAL SCHEDULES

REVISIONS

NO.	DESCRIPTION	DATE

ISSUED DATE:	21 NOVEMBER, 2024
DESIGN BY:	RJK
DRAWN BY:	CDJ
CHECKED BY:	RJK
REVIEWED BY:	RJK

SHEET NO.
M-040

PROJECT # 18-732 PHASE #

GENERAL SHEET NOTES:

1. REFER TO M-001 FOR HVAC LEGENDS, ABBREVIATIONS AND GENERAL PROJECT NOTES.
2. UNLESS OTHERWISE NOTED, HVAC ITEMS SHOWN HEAVY SOLID (——) SHALL BE NEW.
3. COORDINATE DUCTWORK/PIPING/EQUIPMENT/ETC. LAYOUT WITH ALL OTHER TRADES TO AVOID CONFLICT.

SHEET KEY NOTES:

(1) NEW ELECTRIC UNIT HEATER TO BE INSTALLED AT LOCATION SHOWN PER MANUFACTURER RECOMMENDATIONS. COORDINATE FINAL LOCATION WITH OWNER AND ALL OTHER TRADES TO AVOID CONFLICT. COORDINATE CONNECTION OF ELECTRICAL SERVICE WITH CONTRACT #1E.

(2) NEW CEILING MOUNT EXHAUST FAN TO BE INSTALLED AT LOCATION SHOWN PER DETAIL ON SHEET M-030 AND PER MANUFACTURER RECOMMENDATIONS. COORDINATE FINAL LOCATION WITH OWNER AND ALL OTHER TRADES TO AVOID CONFLICT. COORDINATE CONNECTION OF ELECTRICAL SERVICE WITH CONTRACT #1E.

(3) NEW GAS FIRED FURNACE TO BE INSTALLED AT LOCATION SHOWN PER DETAIL ON SHEET M-030 AND PER MANUFACTURER RECOMMENDATIONS. COORDINATE FINAL LOCATION WITH OWNER AND ALL OTHER TRADES TO AVOID CONFLICT. ROUTE VENT AND EXHAUST PIPING PER MANUFACTURER'S RECOMMENDATIONS AND TERMINATE OUTSIDE WITH CONCENTRIC VENT. CONTRACTOR TO FIELD VERIFY EXACT LOCATION FOR EQUIPMENT AND ADJUST AS NECESSARY. FURNACE TO BE CONTROLLED BY HONEYWELL PRESTIGE 2.0 THERMOSTAT (OR EQUAL). COORDINATE CONNECTION OF ELECTRICAL SERVICE WITH CONTRACT #1E. COORDINATE FURNACE THERMOSTAT SPACE LOCATION WITH OWNER.

(4) NEW IN-LINE EXHAUST FAN TO BE INSTALLED AT LOCATION SHOWN PER DETAIL ON SHEET M-030 AND PER MANUFACTURER RECOMMENDATIONS. COORDINATE FINAL LOCATION WITH OWNER AND ALL OTHER TRADES TO AVOID CONFLICT. COORDINATE CONNECTION OF ELECTRICAL SERVICE WITH CONTRACT #1E.

(5) NEW AIR COOLED CONDENSING UNIT TO BE INSTALLED AT LOCATION SHOWN PER MANUFACTURER RECOMMENDATIONS. COORDINATE FINAL LOCATION WITH OWNER AND ALL OTHER TRADES TO AVOID CONFLICT. PROVIDE WITH 6" HIGH CONCRETE HOUSEKEEPING PAD. COORDINATE CONNECTION OF ELECTRICAL SERVICE WITH CONTRACT #1E. CONTRACTOR SHALL SIZE AND ROUTE REFRIGERANT PIPING PER MANUFACTURER RECOMMENDATIONS BETWEEN AIR COOLED CONDENSING UNIT AND ASSOCIATED FURNACE.

(6) FURNACE EXHAUST (CONCENTRIC VENT) SHALL TERMINATE MINIMUM 3 FT ABOVE INTAKE LOUVER LV-903 SERVING MECHANICAL ROOM AND 10 FT HORIZONTALLY FROM INTAKE LOUVER LV-904.

(7) NEW LOUVER TO BE INSTALLED AT LOCATION SHOWN PER DETAIL ON SHEET M-030 AND PER MANUFACTURER RECOMMENDATIONS. COORDINATE FINAL LOCATION WITH OWNER AND ALL OTHER TRADES TO AVOID CONFLICT. COORDINATE CONNECTION OF ELECTRICAL SERVICE WITH CONTRACT #1E.

SEQUENCE OF OPERATIONS:

FANS

EF-900, EF-901 SHALL OPERATE VIA LINE VOLTAGE COOLING THERMOSTAT LOCATED WITHIN SPACE.

EF-902, EF-903, EF-904 SHALL OPERATE WHEN BUILDING IS OCCUPIED.

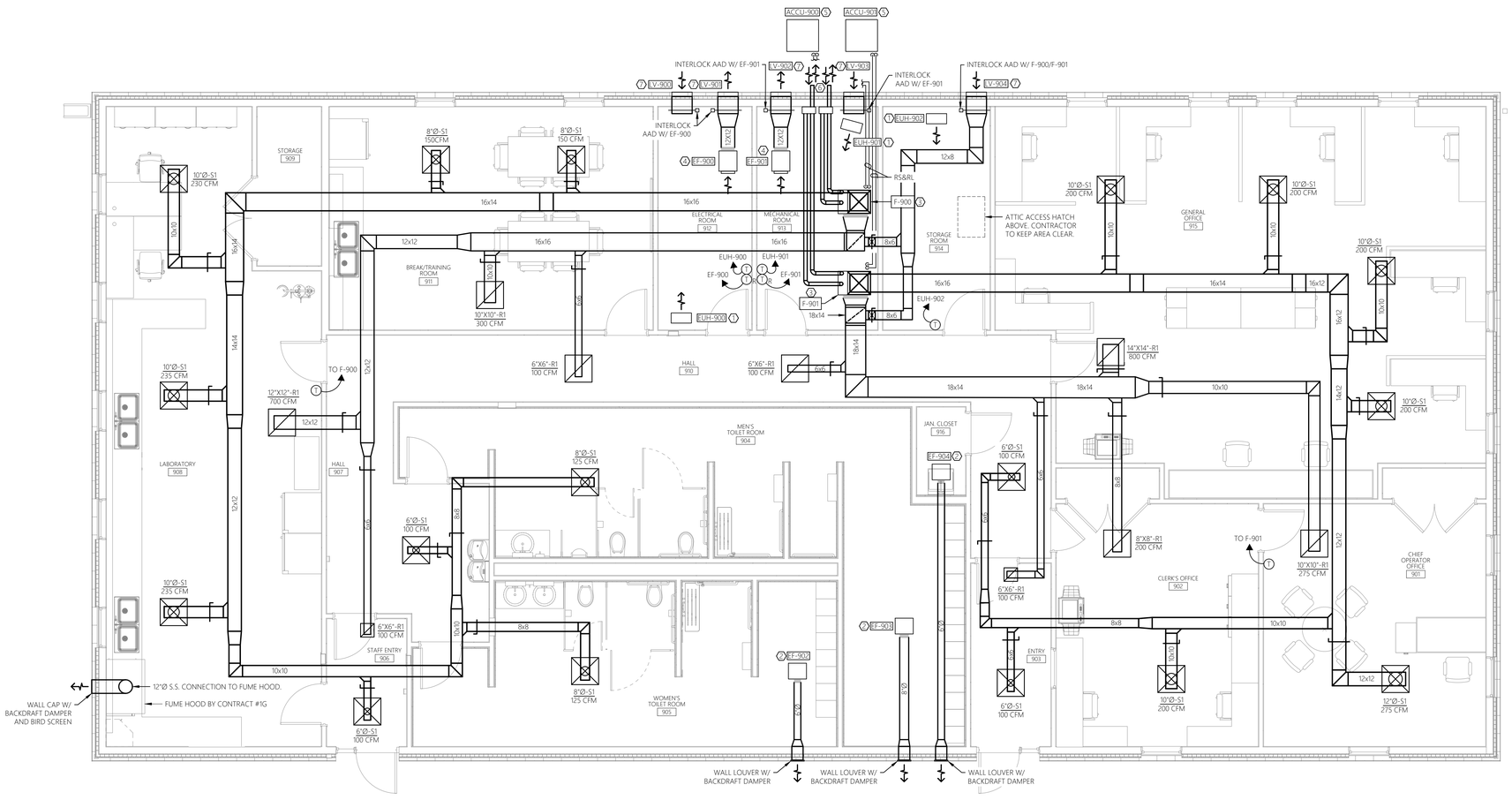

0' 2' 4' 8'
SCALE: 1/4" = 1'-0"

1 M-900 MECHANICAL FLOOR PLAN - NEW WORK
SCALE: 1/4" = 1'-0"

CONTROL BUILDING

MHE ENGINEERING

33 Airport Center Drive, Suite 202
New Windsor, NY 12553
(845) 587-3100

111 Wheatfield Drive, Suite 1
Milford, PA 18337
(570) 296-2765

JADE STONE ENGINEERING
mechanical, electrical, plumbing

444 VANDUZEE ST. WATERTOWN NY 13601
P: 315.536.4062 jse.engineering

HAZARDOUS MATERIAL NOTE:

THE SERVICES PROVIDED BY MHE, INCLUDING ALL WORK DEPICTED ON MHE PLANS, DO NOT INCLUDE SERVICES RELATED TO THE IDENTIFICATION, CONTROLS OR HANDLING OF HAZARDOUS MATERIALS, INCLUDING SUCH MATERIALS AS ASBESTOS AND LEAD PAINT. ALL TESTING, IDENTIFICATION, ABATEMENT, CONTROLS, AND HANDLING OF HAZARDOUS MATERIALS SHALL BE UNDERTAKEN BY A HAZARDOUS MATERIAL CONSULTANT AND CERTIFIED PROFESSIONALS. IF SUCH MATERIALS HAVE BEEN IDENTIFIED, CONTRACTOR WILL COMMUNICATE DIRECTLY WITH HAZARDOUS MATERIAL PROFESSIONAL FOR THE PERFORMANCE OF ANY WORK ON OR ADJACENT TO SAID MATERIALS. IF UNIDENTIFIED MATERIALS OF CONCERN ARE ENCOUNTERED WHILE UNDERTAKING THE WORK SHOWN HEREON, CONTRACTOR SHALL IMMEDIATELY NOTIFY ENGINEER AND OWNER, AND SHALL OBTAIN DIRECTION FROM THE HAZARDOUS MATERIAL CONSULTANT PRIOR TO THE CONTINUATION OF WORK INVOLVING SUSPECTED MATERIAL.

UDIG·NY SAFE DIGGING STARTS HERE
CALL 811

UNAUTHORIZED ADDITION OR ALTERATION OF THIS PLAN IS A VIOLATION OF SECTION 7209(2) OF THE NEW YORK STATE EDUCATION LAW.

ALL PRODUCTION & INTELLECTUAL PROPERTY RIGHT RESERVED ©

CAESARS LANE WWTP EXPANSION PROJECT
145 CAESARS LN.
NEW WINDSOR, NY 12553

FOR TOWN OF NEW WINDSOR
555 UNION AVE.
NEW WINDSOR, NY 12553

MECHANICAL FLOOR PLAN - NEW WORK

REVISIONS

NO.	DESCRIPTION	DATE

ISSUED DATE:	21 NOVEMBER, 2024
DESIGN BY:	RJK
DRAWN BY:	CDJ
CHECKED BY:	RJK
REVIEWED BY:	RJK

SHEET NO.

M-900

PROJECT # 18-732 PHASE #

FIXTURE SCHEDULE

FIXTURE TAG	FIXTURE DESCRIPTION	MINIMUM CONNECTIONS (IN)				DESIGN BASIS		
		COLD	HOT	WASTE	VENT	FIXTURE	FAUCET/FLUSH VALVE	REMARKS
WC-A	WATER CLOSET - ADA WALL MOUNT - FLUSH VALVE - REAR OUTLET	1	-	3	2	SLOAN WALL MOUNTED TOILET BOWL WITH TOP SPUD. MODEL ST-2459	SLOAN ROYAL 111 EXPOSED MANUAL WATER CLOSET FLUSHOMETER - ADA	COORDINATE INSTALLATION WITH CONTRACT #1G
UR-A	URINAL - ADA - WALL MOUNT	3/4	-	3	2	SLOAN VITREOUS CHINA WASHDOWN URINAL. MODEL SU-1009.	SLOAN ROYAL 111 EXPOSED MANUAL URINAL FLUSHOMETER	COORDINATE INSTALLATION WITH CONTRACT #1G
LAV-A	LAVATORY - ADA WALL HUNG	1/2	1/2	1-1/2	1-1/2	AMERICAN STANDARD AQUALYN DROP-IN SINK	MOEN 8413 CHROME ONE HANDLE LAVATORY FAUCET	COORDINATE INSTALLATION WITH CONTRACT #1G AND ARCHITECTURAL LAYOUT/TRIM
KS-A	DOUBLE BASIN- DROP IN - KITCHEN SINK	1/2	1/2	1 1/2	1 1/2	ELKAY DAYTON EQUAL DOUBLE BOWL DROP-IN SINK. 33"X21-1/4"	AMERICAN STANDARD COLONY PRO KITCHEN SINK FAUCET	COORDINATE INSTALLATION WITH CONTRACT #1G AND ARCHITECTURAL LAYOUT/TRIM
SS-A	SERVICE SINK	3/4	3/4	2	1-1/2	MUSTEE UTILITUB COMBO KIT, MODEL#12C WITH FAUCET.	MUSTEE COMBO KIT FAUCET PROVIDED WITH FIXTURE.	COORDINATE INSTALLATION WITH CONTRACT #1G
SH-A	SHOWER	3/4	3/4	3	2	BY CONTRACT #1G (REFER TO ARCH DRAWINGS/SPECS).	SYMMONS ADA SAFETY MIX SHOWER/HAND SHOWER WITH 60" FLEXIBLE HOSE AND SLIDE RAIL.	COORDINATE INSTALLATION WITH CONTRACT #1G AND ARCHITECTURAL LAYOUT/TRIM
WF-A	WATER FOUNTAIN - BI LEVEL - ADA COMPLIANT	1/2	-	-	-	ELKAY LZSTLBWSVRLK EZH20 BOTTLE FILLING & BI-LEVEL ADA VANDAL RESISTANT COOLER, FILTERED & REFRIGERATED, LIGHT GRAY.	-	COORDINATE INSTALLATION WITH CONTRACT #1G
FD-A	FLOOR DRAIN	-	-	-	-	WATTS FD-100. SEE PLANS FOR OUTLET SIZES.	-	PROVIDE WITH TRAP BARRIER SEAL. COORDINATE FINAL LOCATION WITH CONTRACT #1G
FD-B	SHOWER FLOOR DRAIN	-	-	3	2	STAINLESS STEEL SCHLUTER SYSTEMS - INCLUDE FLOOR DRAIN, FLOOR MEMBRANE, FLOOR FLANGE, SS STRAINER, ETC. FOR FULL SYSTEM (SHOWER PAN BY CONTRACT #1G, REFER TO ARCH DRAWINGS/SPECS)	-	PROVIDE WITH TRAP BARRIER SEAL. COORDINATE INSTALLATION WITH CONTRACT #1G AND ARCHITECTURAL LAYOUT/TRIM
DPCO	DECK PLATE CLEAN-OUT	-	-	-	-	JAY R. SMITH #4020 4" OUTLET SIZE W/ ADJUSTABLE NICKEL BRONZE TOP	-	COORDINATE INSTALLATION WITH CONTRACT #1G
ESE-A	INTERIOR - COMBINATION EMERGENCY EYEWASH/SHOWER (PVC CONSTRUCTION)	1 1/4	1 1/4	-	-	GUARDIAN G1993 W/ G6040 THERMOSTATIC MIXING VALVE	-	COORDINATE FINAL LOCATION WITH ALL OTHER TRADES. PROVIDE WITH GUARDIAN FLOW SWITCH AP275-615. COORDINATE CIRCUITRY WITH CONTRACT #1E. PROVIDE WITH HIGHLY VISIBLE SIGNAGE PER ANSI Z358.1
HB-A	HOSE BIB - EXTERIOR (NON-FREEZING)	3/4	-	-	-	WALL HYDRANT WITH INTEGRAL VACUUM BREAKER/BACKFLOW PREVENTER. MODEL: WATTS HY-410 OR EQUAL	-	COORDINATE INSTALLATION WITH CONTRACT #1G. PROVIDE WITH SIGNAGE, ANSI MODEL ADE-4975.

PLUMBING SYMBOLS

SYMBOL	DESCRIPTION
	COLD WATER SUPPLY
	HOT WATER SUPPLY
	HOT WATER RETURN
SAN	SANITARY WASTE LINE
	NATURAL GAS PIPING
V	SANITARY VENT PIPING
	CAP OR PLUG
	CHECK VALVE
	BALANCING VALVE
	DECK PLATE CLEAN OUT
	FLOOR DRAIN/P-TRAP
	FLOW ARROW
	HOSE BIB
	MANUAL GAS COCK
	PIPE DROP
	PIPE RISE
PRV	RELIEF VALVE
	WATER HAMMER ARRESTOR
	BALL TYPE VALVE
	UNION
	VENT THRU ROOF (VTR)
	Y STRAINER
	TRAP PRIMER
	PUMP
	POINT OF DISCONNECTION, FROM EXISTING
	POINT OF CONNECTION, NEW TO EXISTING

ABBREVIATIONS

@	AT
ABV	ABOVE
AFF	ABOVE FINISHED FLOOR
BFF	BELOW FINISHED FLOOR
CLG	CEILING
CW	DOMESTIC COLD WATER
DIA, ø	DIAMETER
DN	DOWN
DPCO	DECK PLATE CLEANOUT
(E)	EXISTING
FD	FLOOR DRAIN
HW	DOMESTIC HOT WATER
HWR	DOMESTIC HOT WATER RETURN
INV	INVERT
LAV	LAVATORY
LS	LAUNDRY SUPPLY
MIN	MINIMUM
NG	NATURAL GAS
NTS	NOT TO SCALE
PRS	POTABLE REUSE SYSTEM
RCP	RECIRCULATION PUMP
SHFD	SHOWER FLOOR DRAIN
SNK	SINK
TMV	TEMPERATURE MIXING VALVE
TW	TEMPERED WATER
TYP	TYPICAL
V	VENT
VTR	VENT THRU ROOF
WC	WATER CLOSET
W/	WITH

GENERAL NOTES

1. THESE DRAWINGS ARE DIAGRAMMATIC IN NATURE AND INDICATE THE SIZE AND GENERAL ARRANGEMENT OF PIPING, EQUIPMENT, AND SPECIALTIES. EXACT LOCATIONS AND ROUTINGS SHALL BE DETERMINED IN THE FIELD BEFORE AND AS THE WORK PROGRESSES.
2. CONTRACTOR SHALL FIELD VERIFY ALL EXISTING CONDITIONS AND DIMENSIONS PRIOR TO COMMENCEMENT OF ANY WORK. ANY REQUIRED CHANGES TO WORK SHOWN ON DRAWINGS SHALL BE COORDINATED WITH ARCHITECT/ENGINEER AND OTHER TRADES PRIOR TO CONSTRUCTION.
3. DRAWINGS DO NOT INDICATE ALL OFFSETS, CHANGES IN ELEVATION, ETC. WHICH MAY BE REQUIRED BY ACTUAL FIELD CONDITIONS. THE CONTRACTOR SHALL PROVIDE FOR SUCH CHANGES IN PIPING OR EQUIPMENT LOCATIONS AS NECESSARY TO ACCOMMODATE FIELD CONDITIONS AND THE WORK OF OTHER CONTRACTS.
4. THE WORK INCLUDED IN THIS CONTRACT ENCOMPASSES BOTH THE DRAWINGS AND SPECIFICATIONS. WORK INCLUDED ON THE DRAWINGS ONLY, OR IN THE SPECIFICATIONS ONLY, SHALL BE INCORPORATED AS IF INCLUDED IN BOTH. SYSTEMS ARE INTENDED TO BE COMPLETE AND FULLY FUNCTIONING. THE CONTRACTOR SHALL PROVIDE SUCH COMPONENTS AS NECESSARY FOR A FULLY FUNCTIONING SYSTEM.
5. COORDINATE THE WORK OF THIS CONTRACT WITH THE WORK OF OTHER CONTRACTS. PHASE INSTALLATION OF EQUIPMENT AND PIPING TO ENSURE CONSTRUCTABILITY, AND THAT CONSTRUCTION PROCEEDS IN AN ORGANIZED, EFFICIENT, AND ORDERLY MANNER. PIPING TO BE SLOPED SHALL TAKE PRECEDENCE OVER PRESSURE PIPING, DUCTWORK, AND EQUIPMENT LOCATIONS.
6. PLUMBING CONTRACTOR SHALL SEAL ALL PIPING AND DUCT PENETRATIONS IN ACCORDANCE WITH THE NEW YORK STATE BUILDING CODE AND NFPA.
7. EXCEPT AS NOTED IN SPECIFICATIONS, ALL CUTTING AND PATCHING OF BUILDING COMPONENTS REQUIRED TO ACCOMMODATE THE WORK OF THIS CONTRACT SHALL BE THE RESPONSIBILITY OF THE PLUMBING CONTRACTOR. ALL PATCHING SHALL MATCH THE EXISTING COMPONENTS AND FINISHES. CUTTING AND PATCHING WORK SHALL BE PERFORMED BY PERSONNEL TRAINED AND REGULARLY EMPLOYED FOR SUCH SERVICES.
8. ALL HORIZONTAL DRAINAGE SHALL BE SLOPED AT A MINIMUM OF 1/4" PER FOOT FOR PIPING 2-1/2" OR LESS, AND 1/8" PER FOOT FOR 3" TO 6" PIPING.
9. INSTALL ALL PIPING, EQUIPMENT, AND SPECIALTIES TO ALLOW MAXIMUM CLEARANCE AND AVOID INTERFERENCE WITH THE OPERATION AND MAINTENANCE OF ALL EQUIPMENT, NEW OR EXISTING. DO NOT INSTALL ANYTHING ABOVE OR WITHIN 3 FT. IN FRONT OF ELECTRICAL GEAR.
10. PLUMBING CONTRACTOR SHALL PROVIDE NECESSARY SUPPORT FRAMING, STIFFENERS, BRACING, AND HANGERS WHETHER SHOWN OR NOT TO ENSURE A COMPLETE AND DURABLE SYSTEM. SUPPORT FRAMING CONNECTIONS SHALL BE WELDED UNLESS SPECIFICALLY SHOWN OTHERWISE. ACTUAL SUPPORTS MAY VARY FROM THOSE SHOWN IN DETAILS AS REQUIRED BY ACTUAL EQUIPMENT FURNISHED OR BY FIELD CONDITIONS.
11. ALL EQUIPMENT SHALL BE INSTALLED IN STRICT ACCORDANCE WITH THE MANUFACTURER'S INSTALLATION INSTRUCTION MANUAL OR MANUFACTURER'S REPRESENTATIVE'S WRITTEN INSTRUCTIONS.
12. PLUMBING CONTRACTOR SHALL PROVIDE BALL TYPE SHUT-OFF VALVES IN ALL PIPING BRANCH TAKE-OFFS FROM THE DOMESTIC WATER SUPPLY MAINS, WHETHER SHOWN OR NOT, FOR ISOLATION AND SERVICE TO SYSTEM.
13. WATER HAMMER ARRESTORS SHALL BE INSTALLED WHERE QUICK-CLOSING VALVES ARE UTILIZED IN ACCORDANCE WITH THE MANUFACTURER'S INSTRUCTIONS AND ASSE 1010.

BACKFLOW PREVENTER NOTES

1. NEW AND REPLACEMENT DEVICES MUST BE TESTED AFTER INSTALLATION AND BEFORE ENTERING SERVICE. DEVICES MUST BE TESTED ANNUALLY THEREAFTER.
2. STRAINERS ARE RECOMMENDED PRIOR TO EACH BACKFLOW DEVICE ON NON-FIRE FIGHTING LINES ONLY. NO STRAINER IS TO BE USED ON A FIRE LINE WITHOUT INSURANCE UNDERWRITER APPROVAL.
3. ASSEMBLIES SHOULD BE SPECIFIED AND INSTALLED WITH MANUFACTURER SUPPLIED VALVES.
4. WATER LINES SHOULD BE THOROUGHLY FLUSHED BEFORE INSTALLATION OF DEVICE TO PREVENT DEBRIS FOULING THE DEVICE CHECK VALVES.
5. DEVICES MUST BE MOUNTED HORIZONTALLY UNLESS APPROVED FOR VERTICAL INSTALLATION.
6. ASSEMBLIES SHOULD NOT BE INSTALLED IN AREAS CONTAINING CORROSIVE OR TOXIC GASES WHICH COULD RENDER THE DEVICE INOPERABLE.
7. DUE TO INHERENT DESIGN OF RPZ ASSEMBLIES, FLUCTUATING SUPPLY PRESSURE ON A LOW FLOW CONDITION MAY CAUSE NUISANCE DRIPPING. INSTALLATION OF A SOFT SEATED CHECK VALVE AHEAD OF THE RPZ WILL OFTEN HOLD PRESSURE CONSTANT DURING PERIODS OF LOW FLOW.
8. WHERE THE DISTANCE BETWEEN THE WATER METER AND DEVICE IS GREATER THAN 10 FEET, ALL EXPOSED PIPING SHOULD BE MARKED "FEED LINE TO BACKFLOW PREVENTER - DO NOT TAP" AT 5-FOOT INTERVALS.
9. ORANGE COUNTY DEPARTMENT OF HEALTH PLAN APPROVAL IS LIMITED TO 5 YEARS. TIME EXTENSIONS FOR PLAN APPROVAL MAY BE GRANTED BY THE ORANGE COUNTY DEPARTMENT OF HEALTH BASED UPON DEVELOPMENT FACTS AND ANY NEW REGULATIONS, OR GUIDANCE, IN EFFECT AT THAT TIME. A NEW PLAN SUBMISSION MAY BE REQUIRED TO OBTAIN A TIME EXTENSION.

MHE ENGINEERING

33 Airport Center Drive, Suite 202
New Windsor, NY 12553
(845) 587-3100

111 Wheatfield Drive, Suite 1
Milford, PA 18337
(570) 296-2765

JADE STONE ENGINEERING
mechanical, electrical, plumbing

444 VANDUZEE ST. WATERTOWN NY 13601
P: 315.536.4062 jse.engineering

HAZARDOUS MATERIAL NOTE:

THE SERVICES PROVIDED BY MHE, INCLUDING ALL WORK DEPICTED ON MHE PLANS, DO NOT INCLUDE SERVICES RELATED TO THE IDENTIFICATION, CONTROLS OR HANDLING OF HAZARDOUS MATERIALS, INCLUDING SUCH MATERIALS AS ASBESTOS AND LEAD PAINT. ALL TESTING, IDENTIFICATION, ABATEMENT, CONTROLS, AND HANDLING OF HAZARDOUS MATERIALS SHALL BE UNDERTAKEN BY A HAZARDOUS MATERIAL CONSULTANT AND CERTIFIED PROFESSIONALS. IF SUCH MATERIALS HAVE BEEN IDENTIFIED, CONTRACTOR WILL COMMUNICATE DIRECTLY WITH HAZARDOUS MATERIAL PROFESSIONAL FOR THE PERFORMANCE OF ANY WORK ON OR ADJACENT TO SAID MATERIALS. IF UNIDENTIFIED MATERIALS OF CONCERN ARE ENCOUNTERED WHILE UNDERTAKING THE WORK SHOWN HEREON, CONTRACTOR SHALL IMMEDIATELY NOTIFY ENGINEER AND OWNER, AND SHALL OBTAIN DIRECTION FROM THE HAZARDOUS MATERIAL CONSULTANT PRIOR TO THE CONTINUATION OF WORK INVOLVING SUSPECTED MATERIAL.

UDIG·NY
SAFE DIGGING STARTS HERE
CALL 811

UNAUTHORIZED ADDITION OR ALTERATION OF THIS PLAN IS A VIOLATION OF SECTION 7209(2) OF THE NEW YORK STATE EDUCATION LAW.

ALL PRODUCTION & INTELLECTUAL PROPERTY RIGHT RESERVED ©

CAESARS LANE WWTP
EXPANSION PROJECT
145 CAESARS LN.
NEW WINDSOR, NY 12553

FOR TOWN OF NEW WINDSOR
555 UNION AVE.
NEW WINDSOR, NY 12553

PLUMBING LEGENDS, ABBREVIATIONS, & NOTES

REVISIONS

NO.	DESCRIPTION	DATE

ISSUED DATE:	21 NOVEMBER, 2024
DESIGN BY:	RJK
DRAWN BY:	CDJ
CHECKED BY:	RJK
REVIEWED BY:	RJK

SHEET NO.

P-001

PROJECT # 18-732 PHASE #

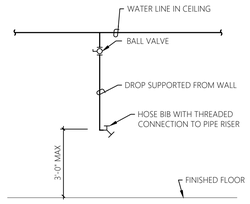

HOSE BIB PIPING DROP DETAIL

SCALE: NTS

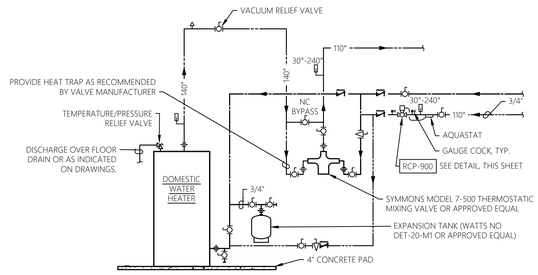

DOMESTIC WATER HEATER PIPING SCHEMATIC DETAIL

SCALE: NTS

PDI SIZE	PIPE SIZE	FIXTURE UNIT LOAD
A	1/2"	1-11
B	3/4"	12-32
C	1"	33-60
D	1-1/4"	61-113
E	1-1/2"	114-154
F	2"	154-330

WATER SUPPLY FIXTURE UNIT (WSFU)		
FIXTURE	COLD	HOT
VALVE WATER CLOSET	5	- -
URINAL	4	- -
LAVATORY/SINK	1.5	1.5
JANITOR'S SINK	3	3

NOTE:
1) WATER HAMMER ARRESTORS SHALL HAVE PISTON AND O-RING CONSTRUCTION WITH PDI #WH-201, ASSE # 1010 AND ANSI # A112.26.1M CERTIFICATION. INSTALL IN HORIZONTAL OR VERTICAL POSITION, BUT NEVER UPSIDE DOWN. SIZE THE UNI9TS AS SHOWN PER THE TABLES SHOWN ABOVE.

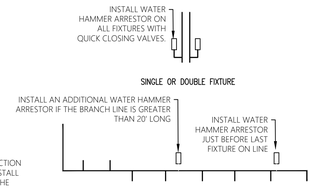

WATER HAMMER ARRESTOR DETAIL

SCALE: NTS

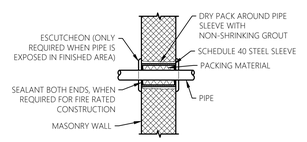

NOTE:

1. THIS DETAIL APPLIES TO BOTH INSULATED AND NON-INSULATED PIPE.
2. FOR FIRE RATED CONSTRUCTION PROVIDE APPROPRIATE APPROVED THROUGH-PENETRATION FIRESTOP ASSEMBLY TO MAINTAIN THE FIRE RATING OF THE WALL ASSEMBLY.

PIPE THRU WALL DETAIL

SCALE: NTS

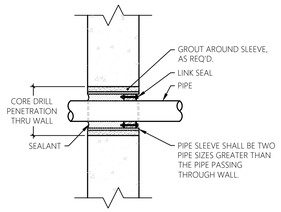

BELOW-GRADE PIPE WALL PENETRATION DETAIL

SCALE: NTS

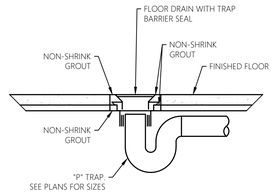

FLOOR DRAIN DETAIL

SCALE: NTS

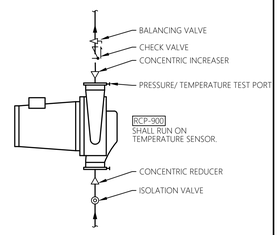

DOMESTIC WATER RECIRC PUMP DETAIL

SCALE: NTS

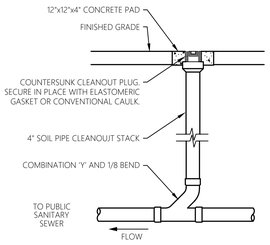

TYPICAL INTERIOR FLOOR CLEANOUT DETAIL

SCALE: NTS

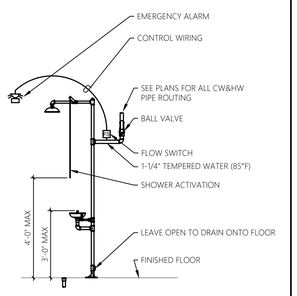

TYP. EMERGENCY EYEWASH/SHOWER DETAIL

SCALE: NTS

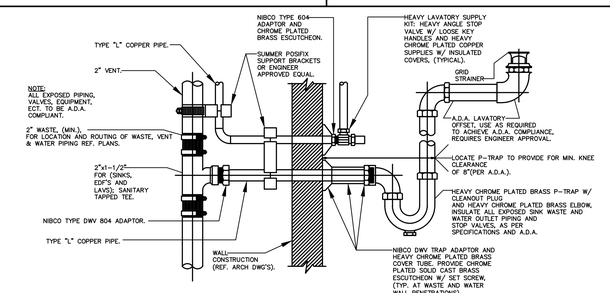

TYPICAL LAVATORY & SINK CONNECTION DETAIL

SCALE: NTS

PROPANE GAS FIRED WATER HEATER SCHEDULE

UNIT TAG	LOCATION	SERVICE	TANK (GAL)	INPUT (MBH)	FLUE DIA	ELECTRICAL MOP	ELECTRICAL VOLTS	ELECTRICAL PHASE	BASIS OF DESIGN MANUFACTURER	BASIS OF DESIGN MODEL NUMBER	
WH-900	CONTROL BUILDING	DOMESTIC HW	100	150	3"	15	120	1	AO SMITH	BTH-150	(1) (2)

(1) PROVIDE WITH CONCENTRIC VENT KIT AND ACID NEUTRALIZER KIT. COORDINATE CIRCUITRY WITH CONTRACT #1E.
(2) GAS INLET SUPPLY PRESSURE: 8.5" W.C. MINIMUM, 14" W.C. MAXIMUM. PROVIDE REGULATOR AS NECESSARY.

DOMESTIC CIRCULATION PUMP SCHEDULE

UNIT TAG	LOCATION	SERVICE	GPM (GPH)	HEAD FT. WG.	RPM	ELECTRICAL WATT	ELECTRICAL VOLTS	ELECTRICAL PHASE	BASIS OF DESIGN MANUFACTURER	BASIS OF DESIGN MODEL NUMBER	REMARKS
RCP-900	MECH RM	WH-900	1	25	3300	270	120	1	B&G	NBF-36	(1)

(1) PROVIDE WITH BRASS LEAD FREE CONSTRUCTION AND AQUASTAT. COORDINATE CIRCUITRY WITH CONTRACT #1E.

MHE ENGINEERING
33 Airport Center Drive, Suite 202
New Windsor, NY 12553
(845) 587-3100
111 Wheatfield Drive, Suite 1
Milford, PA 18337
(570) 296-2765

JADE STONE ENGINEERING
mechanical, electrical, plumbing
444 VANDUZEE ST. WATERTOWN NY 13601
P: 315.536.4062 jse.engineering

HAZARDOUS MATERIAL NOTE:
THE SERVICES PROVIDED BY MHE, INCLUDING ALL WORK DEPICTED ON MHE PLANS, DO NOT INCLUDE SERVICES RELATED TO THE IDENTIFICATION, CONTROLS OR HANDLING OF HAZARDOUS MATERIALS, INCLUDING SUCH MATERIALS AS ASBESTOS AND LEAD PAINT. ALL TESTING, IDENTIFICATION, ABATEMENT, CONTROLS, AND HANDLING OF HAZARDOUS MATERIALS SHALL BE UNDERTAKEN BY A HAZARDOUS MATERIAL CONSULTANT AND CERTIFIED PROFESSIONALS. IF SUCH MATERIALS HAVE BEEN IDENTIFIED, CONTRACTOR WILL COMMUNICATE DIRECTLY WITH HAZARDOUS MATERIAL PROFESSIONAL FOR THE PERFORMANCE OF ANY WORK ON OR ADJACENT TO SAID MATERIALS. IF UNIDENTIFIED MATERIALS OF CONCERN ARE ENCOUNTERED WHILE UNDERTAKING THE WORK SHOWN HEREON, CONTRACTOR SHALL IMMEDIATELY NOTIFY ENGINEER AND OWNER, AND SHALL OBTAIN DIRECTION FROM THE HAZARDOUS MATERIAL CONSULTANT PRIOR TO THE CONTINUATION OF WORK INVOLVING SUSPECTED MATERIAL.

UDIG·NY SAFE DIGGING STARTS HERE
CALL 811

UNAUTHORIZED ADDITION OR ALTERATION OF THIS PLAN IS A VIOLATION OF SECTION 7209(2) OF THE NEW YORK STATE EDUCATION LAW.

ALL PRODUCTION & INTELLECTUAL PROPERTY RIGHT RESERVED ©

CAESARS LANE WWTP EXPANSION PROJECT
145 CAESARS LN.
NEW WINDSOR, NY 12553

FOR TOWN OF NEW WINDSOR
555 UNION AVE.
NEW WINDSOR, NY 12553

PLUMBING DETAILS & SCHEDULES

REVISIONS

NO.	DESCRIPTION	DATE

ISSUED DATE:	21 NOVEMBER, 2024
DESIGN BY:	RJK
DRAWN BY:	CDJ
CHECKED BY:	RJK
REVIEWED BY:	RJK

SHEET NO.

P-030

PROJECT # 18-732 PHASE #

GENERAL SHEET NOTES:

1. REFER TO P-001 FOR PLUMBING LEGEND, ABBREVIATIONS, AND GENERAL PROJECT NOTES.
2. UNLESS OTHERWISE NOTED, PLUMBING ITEMS SHOWN HEAVY SOLID (——) SHALL BE NEW.
3. COORDINATE PLUMBING PIPING/FIXTURE/EQUIPMENT/ETC. LAYOUT WITH ALL OTHER TRADES TO AVOID CONFLICT.

SHEET KEY NOTES:

(1) NEW BACKWATER VALVE TO BE INSTALLED ON 4" SANITARY LINE AT BUILDING EXIT. COORDINATE FINAL LOCATION WITH CONTRACT #1G.

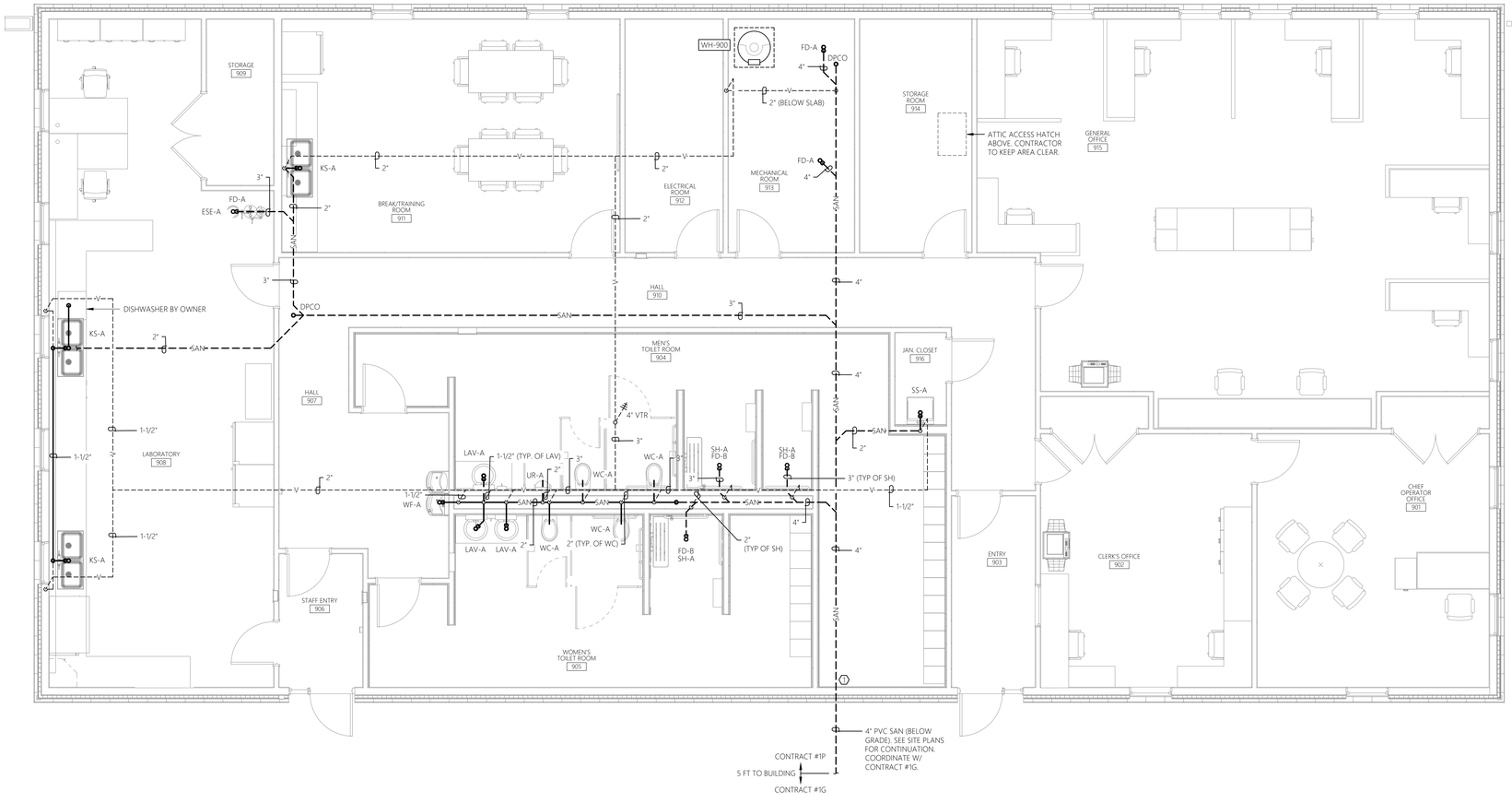

0' 2' 4' 8'
SCALE: 1/4" = 1'-0"

1 P-900 PLUMBING FLOOR PLAN - NEW WORK (SANITARY)
SCALE: 1/4" = 1'-0"
CONTROL BUILDING

MHE ENGINEERING

33 Airport Center Drive, Suite 202
New Windsor, NY 12553
(845) 587-3100

111 Wheatfield Drive, Suite 1
Milford, PA 18337
(570) 296-2765

JADE STONE ENGINEERING
mechanical, electrical, plumbing

444 VANDUZEE ST. WATERTOWN NY 13601
P: 315.536.4062 jse.engineering

HAZARDOUS MATERIAL NOTE:

THE SERVICES PROVIDED BY MHE, INCLUDING ALL WORK DEPICTED ON MHE PLANS, DO NOT INCLUDE SERVICES RELATED TO THE IDENTIFICATION, CONTROLS OR HANDLING OF HAZARDOUS MATERIALS, INCLUDING SUCH MATERIALS AS ASBESTOS AND LEAD PAINT. ALL TESTING, IDENTIFICATION, ABATEMENT, CONTROLS, AND HANDLING OF HAZARDOUS MATERIALS SHALL BE UNDERTAKEN BY A HAZARDOUS MATERIAL CONSULTANT AND CERTIFIED PROFESSIONALS. IF SUCH MATERIALS HAVE BEEN IDENTIFIED, CONTRACTOR WILL COMMUNICATE DIRECTLY WITH HAZARDOUS MATERIAL PROFESSIONAL FOR THE PERFORMANCE OF ANY WORK ON OR ADJACENT TO SAID MATERIALS. IF UNIDENTIFIED MATERIALS OF CONCERN ARE ENCOUNTERED WHILE UNDERTAKING THE WORK SHOWN HEREON, CONTRACTOR SHALL IMMEDIATELY NOTIFY ENGINEER AND OWNER, AND SHALL OBTAIN DIRECTION FROM THE HAZARDOUS MATERIAL CONSULTANT PRIOR TO THE CONTINUATION OF WORK INVOLVING SUSPECTED MATERIAL.

UDIG·NY SAFE DIGGING STARTS HERE
CALL 811

UNAUTHORIZED ADDITION OR ALTERATION OF THIS PLAN IS A VIOLATION OF SECTION 7209(2) OF THE NEW YORK STATE EDUCATION LAW.

ALL PRODUCTION & INTELLECTUAL PROPERTY RIGHT RESERVED ©

CAESARS LANE WWTP EXPANSION PROJECT
145 CAESARS LN.
NEW WINDSOR, NY 12553

FOR TOWN OF NEW WINDSOR
555 UNION AVE.
NEW WINDSOR, NY 12553

PLUMBING FLOOR PLAN - CONTROL BUILDING

REVISIONS

NO.	DESCRIPTION	DATE

ISSUED DATE:	21 NOVEMBER, 2024
DESIGN BY:	RJK
DRAWN BY:	CDJ
CHECKED BY:	RJK
REVIEWED BY:	RJK

SHEET NO.

P-900

PROJECT # 18-732 PHASE #

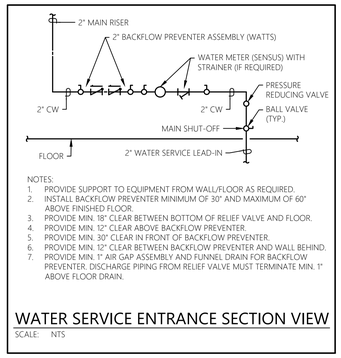

NOTES:
1. PROVIDE SUPPORT TO EQUIPMENT FROM WALL/FLOOR AS REQUIRED.
2. INSTALL BACKFLOW PREVENTER MINIMUM OF 30" AND MAXIMUM OF 60" ABOVE FINISHED FLOOR.
3. PROVIDE MIN. 18" CLEAR BETWEEN BOTTOM OF RELIEF VALVE AND FLOOR.
4. PROVIDE MIN. 12" CLEAR ABOVE BACKFLOW PREVENTER.
5. PROVIDE MIN. 30" CLEAR IN FRONT OF BACKFLOW PREVENTER.
6. PROVIDE MIN. 12" CLEAR BETWEEN BACKFLOW PREVENTER AND WALL BEHIND.
7. PROVIDE MIN. 1" AIR GAP ASSEMBLY AND FUNNEL DRAIN FOR BACKFLOW PREVENTER. DISCHARGE PIPING FROM RELIEF VALVE MUST TERMINATE MIN. 1" ABOVE FLOOR DRAIN.

WATER SERVICE ENTRANCE SECTION VIEW

SCALE: NTS

BACKFLOW PREVENTER NOTES:

1. NEW AND REPLACEMENT DEVICES MUST BE TESTED AFTER INSTALLATION AND BEFORE ENTERING SERVICE. DEVICES MUST BE TESTED ANNUALLY THEREAFTER.
2. STRAINERS ARE RECOMMENDED PRIOR TO EACH BACKFLOW DEVICE ON NON-FIRE FIGHTING LINES ONLY. NO STRAINER IS TO BE USED ON A FIRE LINE WITHOUT INSURANCE UNDERWRITER APPROVAL.
3. ASSEMBLIES SHOULD BE SPECIFIED AND INSTALLED WITH MANUFACTURER SUPPLIED VALVES.
4. WATER LINES SHOULD BE THOROUGHLY FLUSHED BEFORE INSTALLATION OF DEVICE TO PREVENT DEBRIS FOULING THE DEVICE CHECK VALVES.
5. DEVICES MUST BE MOUNTED HORIZONTALLY UNLESS APPROVED FOR VERTICAL INSTALLATION.
6. ASSEMBLIES SHOULD NOT BE INSTALLED IN AREAS CONTAINING CORROSIVE OR TOXIC GASES WHICH COULD RENDER THE DEVICE INOPERABLE.
7. DUE TO INHERENT DESIGN OF RPZ ASSEMBLIES, FLUCTUATING SUPPLY PRESSURE ON A LOW FLOW CONDITION MAY CAUSE NUISANCE DRIPPING. INSTALLATION OF A SOFT SEATED CHECK VALVE AHEAD OF THE RPZ WILL OFTEN HOLD PRESSURE CONSTANT DURING PERIODS OF LOW FLOW.
8. WHERE THE DISTANCE BETWEEN THE WATER METER AND DEVICE IS GREATER THAN 10 FEET, ALL EXPOSED PIPING SHOULD BE MARKED "FEED LINE TO BACKFLOW PREVENTER - DO NOT TAP" AT 5-FOOT INTERVALS.
9. ORANGE COUNTY DEPARTMENT OF HEALTH PLAN APPROVAL IS LIMITED TO 5 YEARS. TIME EXTENSIONS FOR PLAN APPROVAL MAY BE GRANTED BY THE ORANGE COUNTY DEPARTMENT OF HEALTH BASED UPON DEVELOPMENT FACTS AND ANY NEW REGULATIONS, OR GUIDANCE, IN EFFECT AT THAT TIME. A NEW PLAN SUBMISSION MAY BE REQUIRED TO OBTAIN A TIME EXTENSION.

GENERAL SHEET NOTES:

1. REFER TO P-001 FOR PLUMBING LEGEND, ABBREVIATIONS, AND GENERAL PROJECT NOTES.
2. UNLESS OTHERWISE NOTED, PLUMBING ITEMS SHOWN HEAVY SOLID (——) SHALL BE NEW.
3. COORDINATE PLUMBING PIPING/FIXTURE/EQUIPMENT/ETC. LAYOUT WITH ALL OTHER TRADES TO AVOID CONFLICT.

SHEET KEY NOTES:

1. NEW GAS FIRED WATER HEATER TO BE INSTALLED AT LOCATION SHOWN PER DETAIL ON SHEET P-030 AND PER MANUFACTURER RECOMMENDATIONS. COORDINATE FINAL LOCATION WITH OWNER AND ALL OTHER TRADES TO AVOID CONFLICT. COORDINATE CONNECTION OF ELECTRICAL SERVICE WITH CONTRACT #1E. PROVIDE 4" HIGH HOUSEKEEPING PAD. ROUTE INTAKE/EXHAUST FLUES AND TERMINATE OUTSIDE PER MANUFACTURER RECOMMENDATIONS. PROVIDE ALL FITTINGS/ACCESSORIES AS REQUIRED FOR A COMPLETE AND OPERABLE SYSTEM.
2. CONTRACTOR SHALL SIZE AND INSTALL WATER HAMMER ARRESTORS PER MANUFACTURER'S RECOMMENDATIONS.
3. NEW DOMESTIC WATER RECIRCULATION PUMP TO BE INSTALLED AT LOCATION SHOWN PER DETAIL ON SHEET P-030 AND PER MANUFACTURER RECOMMENDATIONS. COORDINATE FINAL LOCATION WITH OWNER AND ALL OTHER TRADES TO AVOID CONFLICT. COORDINATE CONNECTION OF ELECTRICAL SERVICE WITH CONTRACT #1E.
4. NEW EMERGENCY EYEWASH/SHOWER TO BE INSTALLED AT LOCATION SHOWN PER DETAIL ON SHEET P-030 AND PER MANUFACTURER RECOMMENDATIONS. COORDINATE FINAL LOCATION WITH OWNER AND ALL OTHER TRADES TO AVOID CONFLICT. PROVIDE ALL FITTINGS/ACCESSORIES AS REQUIRED FOR A COMPLETE AND OPERABLE SYSTEM. PROVIDE THERMOSTATIC MIXING VALVE TO PROVIDE TEPID WATER (85°F) TO FIXTURE. PROVIDE FLOW SWITCH. COORDINATE CIRCUITRY WITH CONTRACT #1E.
5. NEW RPZ BACKFLOW PREVENTER (WATTS LF009M2QT OR EQUAL) TO BE INSTALLED AT LOCATION SHOWN PER SECTION VIEW ON THIS SHEET AND PER MANUFACTURER RECOMMENDATIONS. COORDINATE FINAL LOCATION WITH OWNER AND ALL OTHER TRADES TO AVOID CONFLICT. PROVIDE ALL ACCESSORIES FOR A COMPLETE AND OPERABLE SYSTEM. PROVIDE AIR GAP AND FUNNEL DRAIN CONNECTION BELOW RPZ AND ROUTE PVC DRAIN PIPE TO FLOOR DRAIN.
6. FURNACE EXHAUST (CONCENTRIC VENT) SHALL TERMINATE MINIMUM 3 FT ABOVE INTAKE LOUVER SERVING MECHANICAL ROOM.
7. COORDINATE PROPANE STORAGE TANK LOCATION, SECONDARY REGULATOR LOCATION, AND CONNECTION OF PROPANE PIPING WITH GAS PROVIDER AND CONTRACT #1G.

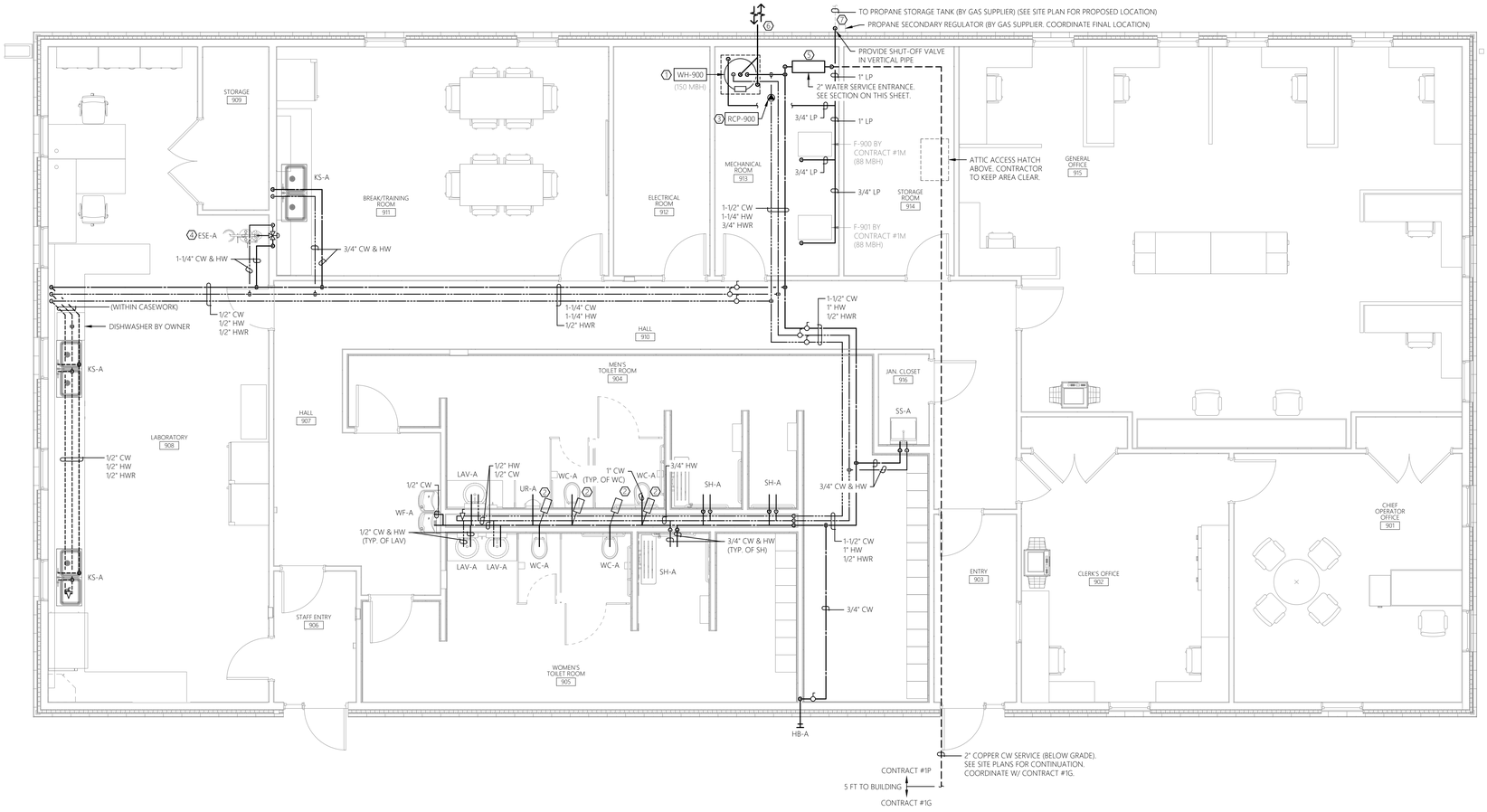

0' 2' 4' 8'
SCALE: 1/4" = 1'-0"

1 P-901 PLUMBING FLOOR PLAN - NEW WORK (DOMESTIC)
SCALE: 1/4" = 1'-0"
CONTROL BUILDING

MHE ENGINEERING
33 Airport Center Drive, Suite 202
New Windsor, NY 12553
(845) 587-3100
111 Wheatfield Drive, Suite 1
Milford, PA 18337
(570) 296-2765

JADE STONE ENGINEERING
mechanical, electrical, plumbing
444 VANDUZEE ST. WATERTOWN NY 13601
P: 315.536.4062 jse.engineering

HAZARDOUS MATERIAL NOTE:
THE SERVICES PROVIDED BY MHE, INCLUDING ALL WORK DEPICTED ON MHE PLANS, DO NOT INCLUDE SERVICES RELATED TO THE IDENTIFICATION, CONTROLS OR HANDLING OF HAZARDOUS MATERIALS, INCLUDING SUCH MATERIALS AS ASBESTOS AND LEAD PAINT. ALL TESTING, IDENTIFICATION, ABATEMENT, CONTROLS, AND HANDLING OF HAZARDOUS MATERIALS SHALL BE UNDERTAKEN BY A HAZARDOUS MATERIAL CONSULTANT AND CERTIFIED PROFESSIONALS. IF SUCH MATERIALS HAVE BEEN IDENTIFIED, CONTRACTOR WILL COMMUNICATE DIRECTLY WITH HAZARDOUS MATERIAL PROFESSIONAL FOR THE PERFORMANCE OF ANY WORK ON OR ADJACENT TO SAID MATERIALS. IF UNIDENTIFIED MATERIALS OF CONCERN ARE ENCOUNTERED WHILE UNDERTAKING THE WORK SHOWN HEREON, CONTRACTOR SHALL IMMEDIATELY NOTIFY ENGINEER AND OWNER, AND SHALL OBTAIN DIRECTION FROM THE HAZARDOUS MATERIAL CONSULTANT PRIOR TO THE CONTINUATION OF WORK INVOLVING SUSPECTED MATERIAL.

UDIG·NY SAFE DIGGING STARTS HERE
CALL 811

UNAUTHORIZED ADDITION OR ALTERATION OF THIS PLAN IS A VIOLATION OF SECTION 7209(2) OF THE NEW YORK STATE EDUCATION LAW.

ALL PRODUCTION & INTELLECTUAL PROPERTY RIGHT RESERVED ©

CAESARS LANE WWTP
EXPANSION PROJECT
145 CAESARS LN.
NEW WINDSOR, NY 12553

FOR TOWN OF NEW WINDSOR
555 UNION AVE.
NEW WINDSOR, NY 12553

PLUMBING FLOOR PLAN - CONTROL BUILDING

REVISIONS

NO.	DESCRIPTION	DATE

ISSUED DATE:	21 NOVEMBER, 2024
DESIGN BY:	RJK
DRAWN BY:	CDJ
CHECKED BY:	RJK
REVIEWED BY:	RJK

SHEET NO.

P-901

PROJECT # 18-732 PHASE #

EXHIBIT G

Project Labor Agreement Covering Construction of the Caesars Lane WWTP Expansion Project Phase II

PROJECT LABOR AGREEMENT

COVERING CONSTRUCTION OF

THE CAESARS LANE WWTP

EXPANSION PROJECT

PHASE II

January 24, 2025

THE CAESARS LANE WWTP EXPANSION PROJECT PHASE II
LABOR AGREEMENT

PREAMBLE

I.	ARTICLE 1 - PARTIES TO THE AGREEMENT	4
II.	ARTICLE 2 - GENERAL CONDITIONS SECTION	4
III.	ARTICLE 3 - SCOPE OF THE AGREEMENT	6
IV.	ARTICLE 4 - UNION RECOGNITION AND EMPLOYMENT	8
V.	ARTICLE 5- UNION REPRESENTATION	10
VI.	ARTICLE 6 - MANAGEMENT RIGHTS	12
VII.	ARTICLE 7 - WORK STOPPAGES AND LOCKOUTS SECTION	12
VIII.	ARTICLE 8 - LABOR MANAGEMENT COMMITTEE	15
IX.	ARTICLE 9 - GRIEVANCE & ARBITRATION PROCEDURE	17
X.	ARTICLE 10 - JURISDICTIONAL DISPUTES	18
XI.	ARTICLE 11 - WAGES AND BENEFITS	19
XII.	ARTICLE 12 - HOURS OF WORK, PREMIUM PAYMENTS, SHIFTS AND HOLIDAYS	22
XIII.	ARTICLE 13 - APPRENTICESHIP & HELMETS TO HARDHATS	25
XIV.	ARTICLE 14- NO DISCRIMINATION	26
XV.	ARTICLE 15 - GENERAL TERMS SECTION 15.1 PROJECT RULES	27
XVI.	ARTICLE 16 - SAFETY PROTECTION OF PERSON AND PROPERTY	28
XVII.	ARTICLE 17 - TEMPORARY SERVICES	29
XVIII.	ARTICLE 18 - SAVINGS AND SEPARABILITY	29
XIX.	ARTICLE 19 - FUTURE CHANGES IN SCHEDULE A AREA CONTRACTS	29
XX.	ARTICLE 20 - PROJECT SPECIFIC	30
	SCHEDULES A- F	

PROJECT LABOR AGREEMENT

PREAMBLE

WHEREAS, THE TOWN OF NEW WINDSOR desires to provide for the cost efficient, safe, quality, and timely completion of PHASE II of THE CAESARS LANE WWTP EXPANSION PROJECT in a manner designed to afford the best work at the lowest reasonable costs to THE TOWN OF NEW WINDSOR and component districts, and the committee they represent, and the advancement of permissible statutory objectives, while ensuring compliance with all requirements of funding sources secured by the TOWN OF NEW WINDSOR to complete the Project;

WHEREAS, THE TOWN OF NEW WINDSOR ("THE TOWN") engaged ARACE & COMPANY ("Arace") to undertake a study of whether the use of a Project Labor Agreement will best serve THE TOWN OF NEW WINDSOR'S interest in obtaining the best work at the lowest possible price, preventing favoritism, fraud and corruption, and other considerations such as the impact of delay, the possibility of cost saving advantages, ensure local labor, and any local history of labor unrest; and

WHEREAS, the Arace report, entitled "Project Labor Agreement Feasibility Study " (the "Study"), concluded that use of a Project Labor Agreement would provide THE TOWN OF NEW WINDSOR with measurable economic benefits via the use of apprentice labor, concessions on second shifts, holidays, and overtime, and Wicks Law Exemption, as well as several layers of labor stability, including but not limited to, a single set of rules and conditions for all workers, elimination of work stoppage, ensuring priority access to the local union member network, and a well-trained and safety conscious work force, and that use of a Project Labor Agreement would otherwise promote THE TOWN'S interest in obtaining the best work at the lowest prices as well as preventing favoritism, fraud and corruption; and

WHEREAS, THE TOWN OF NEW WINDSOR has carefully reviewed and considered the Study, a copy of which is on file with THE TOWN, and determined, among other things, that THE TOWN OF NEW WINDSOR interest in obtaining the best work at the lowest possible price, preventing favoritism, fraud and corruption, preventing the impact of delay owing to labor unrest, obtaining cost savings advantages, and gaining measurable management flexibility and benefits are best met by requiring a Project Labor Agreement and, therefore, directs that a Project Labor Agreement be made part of the Project; and

WHEREAS, this Project Labor Agreement will foster the achievement of these goals, inter alia, by:

(1) expediting the construction process and otherwise minimizing the disruption to the project;

(2) avoiding the costly delays of potential strikes, slowdowns, and walkouts arising from work disputes and promoting labor harmony and peace for the duration of the project;

(3) standardizing the terms and conditions governing the employment of labor on the project;

(4) permitting flexibility in work scheduling where necessary at affordable pay rates;

(5) permitting adjustments to work rules and staffing requirements from those which otherwise might apply;

(6) providing comprehensive and standardized mechanisms for the settlement of work disputes, including those relating to jurisdiction;

(7) promoting work opportunities for those within THE TOWN OF NEW WINDSOR and surrounding areas; and

(8) ensuring a reliable source of skilled and experienced labor; and

WHEREAS, THE TOWN OF NEW WINDSOR, has, through independent investigation and analysis, determined the likelihood of substantial cost savings to the Project will result from the application of this Agreement; and

WHEREAS, the Hudson Valley Building & Construction Trades Council, and its affiliated Local Unions and their members, desire to provide for stability, security and work opportunities which are afforded by a Project Labor Agreement; and others; and

WHEREAS, the Parties desire to maximize project safety conditions for both workers and Others.

NOW, THEREFORE, the Parties enter into this Agreement:

I. ARTICLE 1 - PARTIES TO THE AGREEMENT

SECTION 1.1 PARTIES TO THE AGREEMENT

This is a Project Labor Agreement ("Agreement") entered into for all Phase II construction, as defined herein, as part of THE CAESARS LANE WWTP EXPANSION PROJECT (as defined below) between (1) THE TOWN OF NEW WINDSOR, (2) Hudson Valley Building and Construction Trades Council ("Council") on behalf of itself and its affiliated Local Unions ("Local Unions"), and (3) the signatory Local Unions on behalf of themselves and their members.

II. ARTICLE 2 - GENERAL CONDITIONS SECTION

SECTION 2.1 DEFINITIONS

Throughout this Agreement:

(A) **"Contractor(s)"** means any contractor and subcontractors of whatever tier engaged in Project Work within the scope of this Agreement as defined in Article 3, subject to exclusions defined in Section 3.3; 20.3 and 20.4.

(B) **"Council"** means the Hudson Valley Building & Construction Trades Council, AFL-CIO.

(C) **"Local Union(s)"** means the Local Unions signatory to this Agreement, individually

and collectively.

(D) **"Owner"** means THE TOWN OF NEW WINDSOR.

(E) **"Owner's Representative"** means any Construction Manager, or Clerk of the Works, or other individual or entity designated by the Owner to enter into this Agreement or otherwise act on its behalf.

(F) **"The Project"** means the work to be performed in connection with all construction associated with THE CAESARS LANE WWTP EXPANSION PROJECT as more fully set forth in Article 3, Section 3.1, subject to exclusions defined in Sections 3.3, 20.3 and 20.4.

(G) **"Project Work"** means the work covered by this Agreement and fully defined in Article 3, Section 3.1, subject to exclusions defined in Section 3.3; 20.3 and 20.4.

(H) **"Schedule A"** means and refers to collective bargaining agreements of affiliated Local Unions.

(I) **"Union Parties"** and **"Unions"** means the Hudson Valley Building & Construction Trades Council, AFL-CIO and the signatory Local Unions to this Agreement, individually and collectively.

SECTION 2.2 CONDITIONS FOR AGREEMENT TO BECOME EFFECTIVE

This Agreement shall not become effective unless each of the following conditions are met: (I) the Agreement is signed by the Hudson Valley Building & Construction Trades Council and the Local Unions having jurisdiction over the Project Work; (2) the Agreement is approved by the NYS Building & Construction Trades Council (NYSBCTC); (3) the Agreement is approved by the NABTU; and (4) the Agreement is authorized by the Owner.

SECTION 2.3 ENTITIES BOUND & ADMINISTRATION OF AGREEMENT

This Agreement shall be binding on all signatory Unions and their affiliates and all Contractors performing Project Work as defined in Article 3, subject to exceptions in Sections 3.3, 20.3 and 20.4. The Contractors shall include in any subcontract that they let for performance during the term of this Agreement a requirement that their Subcontractors, of whatever tier, become bound by this Agreement with respect to that subcontracted Project Work performed within the scope of Article 3, and require that each Subcontractor, of whatever tier, sign a Letter of Assent (Schedule B). Any Subcontractor that fails to or refuses to provide a duly executed Letter of Assent will not be permitted to perform any work on, nor become payable for, any Project Work. This Agreement shall be administered by the Designee named by the Owner pursuant to Schedule C.

SECTION 2.4 SUPREMACY CLAUSE

This Agreement, together with the local Collective Bargaining Agreements appended hereto and referred to herein as "Schedule A" represents the complete understanding with respect to the Project and supersedes any national agreement, local agreement, or other collective bargaining agreement of any type which would otherwise apply to Project Work, in whole or in part, except to the extent that any of the following apply: NTL Articles of Agreement, the National Stack/Chimney Agreement, the National Cooling Tower Agreement, the UA/IBEW Joint National Agreement for Instrument and Control Systems Technicians, and the National Agreement of the International Union of Elevator Constructors (the "National Agreements"), the National Agreements shall apply except that when Contractor is also a signatory to an agreement listed in Schedule A hereof,

Articles 7, 9,

and 10 of this Agreement shall prevail over the applicable National Agreement and any Schedule A agreement. Where a subject covered by the provisions of this Agreement is also covered by a Schedule A agreement, the provisions of this Agreement shall prevail. If this Agreement is silent on any matter addressed in the applicable Schedule A agreement, the Schedule A agreement shall govern. It is understood that by virtue of having become bound by this Project Labor Agreement, the Contractors will not be obligated to sign any other local, area, or national agreement.

SECTION 2.5 LIABILITY

The liability of any Contractor and the liability of any Union under this Agreement shall be several and not joint. The Contractors, and Subcontractors shall not be liable for any violations of this Agreement by any other Contractor or Subcontractor; and the Council and Local Unions shall not be liable for any violations of this Agreement by any other Union. Notwithstanding the above, every signatory to the Agreement further acknowledges that it will be liable for its own breach, partial breach or otherwise, whether related or not to the breach of another signatory.

SECTION 2.6 THE BID SPECIFICATIONS

The Owner shall require in its bid specifications for all Project Work within the scope of Article 3 that all successful bidders and their Subcontractors of whatever tier (unless otherwise excepted under this Agreement) become bound by this Agreement. Every Contractor shall require its Subcontractors, of whatever tier, to execute the Letter of Assent in Schedule Band to become bound by this Agreement. Any Contractor or Subcontractor that fails to obtain a fully executed Letter of Assent from any subcontractor that they let for performance will be held liable for that let subcontractor's breach, partial breach or otherwise, or violation of this Agreement.

SECTION 2.7 AVAILABILITY AND APPLICABILITY TO ALL SUCCESSFUL BIDDERS

This Agreement shall be binding on all signatory Unions and their affiliates, and all Contractors, Unions and/or non-Unions performing Project Work, unless otherwise excepted under this Agreement. Unless expressly provided for in this Agreement, this Agreement shall not apply to the work of any Contractor which is performed at any location other than the site of Project Work.

III. ARTICLE 3 - SCOPE OF THE AGREEMENT

SECTION 3.1 PROJECT WORK

This Agreement shall only apply to Project Work as defined in this Article and, subject to the exclusions in this Article, Project Work means solely that work performed in connection with all construction associated with Phase II of THE CAESARS LANE WWTP EXPANSION PROJECT. Project Work, unless otherwise excepted under Sections 3.3, 20.3 or 20.4, shall include all sitework, utilities, demolition, environmental work, MEP's and all construction related to Phase II of THE CAESARS LANE WWTP EXPANSION PROJECT.

SECTION 3.2 TIME LIMITATIONS

A. To be covered by this Agreement, Project Work must be awarded after the effective date of this Agreement.

B. This Agreement shall expire upon completion and acceptance by the Owner of the Project.

C. This Agreement may be extended only by written mutual agreement of the Parties.

SECTION 3.3 EXCLUDED EMPLOYEES

Notwithstanding the provisions of Section 3.1 of this Article, the following person/entities are not subject to the provisions of this Agreement, even though performing work on or in connection with the Project:

A. Superintendents, supervisors (excluding general and forepersons specifically covered by a craft's Schedule A), engineers, inspectors and testers, quality control/assurance personnel (excluding those specifically covered by a craft's Schedule A), timekeepers, mail carriers, clerks, office workers, messengers, guards employed by Owner (and not covered by Schedule A), technicians, non-manual employees, and all professional, engineering (except field surveyors), administrative and management persons;

B. Employees of the Project Owner;

C. Employees and entities engaged in off-site manufacture, modification, repair, maintenance, painting, handling or fabrication of project components, materials, equipment, or machinery, including but not limited to delivery of concrete, in whatever form, to or from the worksite. For clarity, all work at the worksite involving the delivery of aggregate supply consruction materials, as that term is defined in NYCRR Title 12 Section 222.1, to the worksite; all work performed involving the hauling of aggregate supply construction materials from the worksite to a central stockpile, as well as any return hauls, empty or loaded, time spent loading or unloading at a worksite, and time spent loading or unloading at a central stockpile related to hauls from or to a worksite; and all work performed within a 50-mile radius of a worksite involving the delivery of aggregate supply construction materials from a vendor of aggregate supply construction materials, such as a plant or quarry, to a worksite, except that which is performed by direct employees of a supplier of aggregate supply construction materials, when making a single delivery in a given day, shall be included in this Agreement, as required by NYCCR Title 12 Section 222.2 and NYS Labor Law Section 220.

D. Employees of the Construction Manager, if one, except that performing manual, onsite construction labor who will be covered by this Agreement;

E. Employees engaged in onsite equipment warranty work;

F. Employees engaged in geophysical testing (whether land or water) other than boring for core samples;

G. Employees engaged in laboratory or specialty testing or inspections, unless ordinarily done by a member of a Trade Union;

H. Employees engaged in ancillary Project Work performed by third parties such as electric utilities, gas utilities, telephone companies, and railroads. Utility work provided by gas, electric, and cable companies, which is not performed by utility company employees, shall be subject to the terms of this Agreement; and

I. Employees and entities engaged in specialty vendor work that the Town has previously sole sourced, including, but not limited to, Aqualogics for all controls and instrumentation and D-Ben Security Systems for security and protection services including, but not limited to video surveillance, alarm systems, security and prevention systems, and fire protection; and

J. Employees and entities engaged in the manufacturing, design, handling or pre-fabrication of the pre-engineered metal building for the Project. Erection of such shall be covered work.

IV. ARTICLE 4 – UNION RECOGNITION AND EMPLOYMENT

SECTION 4.1 PRE-HIRE RECOGNITION

The Contractors recognize the signatory Unions as the sole and exclusive bargaining representatives of all craft employees who are performing Project Work within the scope of Article 3 of this Agreement.

SECTION 4.2 UNION REFERRAL

A. The Contractors agree to hire craft employees for Project Work covered by this Agreement through the job referral systems and hiring halls established in the Local Unions' area collective bargaining agreements (attached as Schedule A to this Agreement), where those referrals meet the qualifications set forth in items 1, 2, and 4 of subparagraph B. The Unions agree to provide such craft employees (including apprentices) to all Contractors on a non-discriminatory basis. Notwithstanding this, Contractors shall have sole right to determine the competency of all referrals; the number of employees required; and the selection of employees for layoff (subject to Article 5, Section 5.3). In the event that a Local Union is unable to fill any request for qualified employees within a 48-hour period after such requisition is made by a Contractor (Saturdays, Sundays and holidays excepted), a Contractor may employ qualified applicants from any other available source. In the event that the Local Union does not have a job referral system, the Contractor shall give the Local Union first preference to refer applicants, subject to the other provisions of this Article. The Contractor shall notify the Local Union of craft employees hired for Project Work within its jurisdiction from any source other than referral by the Union. The Local Unions will cooperate with Contractor requests for minority, women, or economically disadvantaged referrals to meet the goals of Article 4, Section 4.4. These workers may

be delivered under a "Direct Entry" designation or by use of a Department of Labor waiver.

B. A Contractor may request by name, and the Local Union will honor, referral of persons who have applied to the Local Union for Project Work and who meet the following qualifications:

(1) Possess any license required by New York State law for the Project Work to be performed;

(2) Have worked a total of at least 1000 hours in the construction craft during the prior two years, and

(3) Were on the Contractor's active payroll for at least 60 out of the 180 calendar days prior to the contract award.

(4) Have the ability to safely perform the basic functions of the applicable trade.

(5) Have not committed a felony or misdemeanor, or other violation that would render such person unfit to work on Town property (which unfitness shall be determined by the Owner, in its sole discretion).

C. With the exception of specialty work as described in Schedule C, no more than twelve and a half (12.5%) per centum of the employees covered by this Agreement, per Contractor by craft, shall be hired through the provisions of subparagraph B of this section (any fraction shall be rounded to the next highest whole number). Craft forepersons and/or general forepersons shall be included in the twelve and a half (12.5%) percent. If requested by the appropriate Union, a Contractor utilizing this provision for by-name referrals shall furnish the Union with a written certification that the individuals requested for referral meet the requirements of (1) – (5) above. The 12.5% as above shall be 50% for specialty work as described in Schedule C.

D. The Local Unions shall exert their utmost efforts to recruit a sufficient number of skilled craft workers to fulfill the manpower requirements of the Contractor. When a Contractor of any tier is contracted to perform Project Work and such Contractor is not signatory to a Schedule A agreement (not including signatory through this Agreement) and the Union cannot provide ample labor to support the construction schedule or project, then the Contractor may hire outside the Union hiring halls and the Contractor may, at the Contractor's discretion, replace the non-Union or non-dispatched employee when notified by the Union that labor has become available through the Union. The Contractor shall consider and may use other employees affiliated with the Council before any non-Union hiring except where specifically addressed in this Agreement, if those employees from the other Unions have the required trade skills to perform the Project Work. Those hired through this provision shall be laid off before those of an affiliated Union. In the absence of a General Contractor or Construction Manager, the Owner shall decide based upon a review of the construction schedule and its latest updates if and when the Union is unable to provide ample labor to support the construction schedule or Project Work.

E. Notwithstanding the foregoing, THE TOWN OF NEW WINDSOR or a representative thereof, shall have the sole discretion to request that a person be removed from working on this Project.

SECTION 4.3 NON-DISCRIMINATION IN REFERRALS

The Local Unions represent that their hiring halls and referral systems shall be operated in a non-discriminatory manner and in full compliance with all applicable federal, state and local laws and regulations which require equal employment opportunities. Referrals shall not be affected in any way by the rules, regulations, bylaws, constitutional provisions or any other aspects or obligations of Union membership, policies, or requirements and shall be subject to such other conditions as are

established in this Article. No employment applicant shall be discriminated against by any referral system or hiring hall because of the applicant's Union membership, or lack thereof.

SECTION 4.4 WORKFORCE DIVERSITY UTILIZATION

The Unions recognize and acknowledge that workforce diversity of minorities and women are employment goals consistent with our values of fair play. The Environmental Facilities Corporation funded the Project with minority and women-owned business goals of $4,435,560 and service-disabled veteran-owned business goals of $887,112. The Local Unions agree and will strive to utilize their best efforts to provide qualified minority and female and service-disabled veteran applicants.

SECTION 4.5 CROSS AND QUALIFIED REFERRALS

The Local Unions shall not knowingly refer to a Contractor an employee then employed by another Contractor working under this Agreement. The Local Unions shall exert their utmost efforts to recruit sufficient numbers of skilled and qualified crafts employees to fulfill the requirements of each Contractor.

SECTION 4.6 UNION DUES

Nothing in this Agreement requires employees to join a Union or pay dues or fees to a Union as a condition of working on the Project. This Agreement is not, however, intended to supersede independent requirements in applicable Local Union Agreements as to Contractors that are otherwise signatory to those Agreements in relation to employees of such Contractors performing Project Work.

V. ARTICLE 5 – UNION REPRESENTATION

SECTION 5.1 LOCAL UNION REPRESENTATIVE

Each Local Union signatory to this Agreement shall be entitled to designate a representative and/or Business Manager who shall be afforded access to the Project site only during times when Project Work is being conducted.

SECTION 5.2 STEWARDS

A. Each Local Union shall have the right to designate from among those referred to the Project a working journey person as a Steward or Lead Engineer per shift, and shall notify the Construction Manager or Clerk of Works if applicable, or general contractor, of the identity of the designated Steward or Lead Engineer (and alternate) prior to the assumption of such duties. Stewards or Lead Engineer shall not exercise supervisory functions. There will be no non-working Stewards or Lead Engineer on the Project.

B. In addition to his/her work as an employee, the Steward or Lead Engineer shall have the right to receive complaints or grievances and to discuss and assist in their adjustment with the Contractor's appropriate supervisor; such activities, however, are not to interfere with the Contractor's work unless an emergency situation exists. Each Steward or Lead Engineer shall be concerned with the employees of the Steward's Contractor and, if applicable, Subcontractors of that Contractor, but not with the employees of any other Contractor. The Contractor will not discriminate against the Steward or Lead Engineer in the proper performance of Union duties.

C. Requirements for Stewards or Lead Engineer shall be as per the applicable Schedule A agreement.

D. The Construction Manager or Clerk of Works, if applicable, may employ the laborer steward or another craft steward.

SECTION 5.3 LAYOFF OF A STEWARD

Contractors agree to notify the appropriate Union 24 hours prior to the layoff of a Steward or Lead Engineer, except in cases of discipline or discharge for just cause. If a Steward is protected against layoff by a Schedule A agreement, such provisions shall be recognized to the extent the Steward or Lead Engineer possesses the necessary qualifications to perform the Project Work required. In any case in which a Steward or Lead Engineer is discharged or disciplined for just cause, the Local Union involved shall be notified immediately by the Contractor. Contractor and the Union shall take any and all steps necessary to ensure that the layoff or discharge or discipline of a Steward or Lead Engineer minimizes any delay to the Project Work. The Owner and/or Construction Manager must be consulted prior to such a layoff, discharge, or discipline of a Steward or Lead Engineer to provide any input or opportunity to object to the decision.

SECTION 5.4 UNION STANDARDS

A. The Council and its affiliates have a legitimate interest in preventing the undermining of the work opportunities and standards gained through collective bargaining and desire to preserve and protect work opportunities for its members.

B. THE TOWN OF NEW WINDSOR, while recognizing this interest, must maintain its ability to utilize the services of off-site fabricators and those entities involved in deliveries of construction materials, except those materials included in Section 3.3, when not covered under New York State Labor Law 220.

C. While the scope of the Agreement is limited to Project Work as defined and subject to exceptions herein, Contractors should, in their sole discretion, make reasonable efforts to use Union signatory vendors, which includes, but is not limited to, UA Yellow Label and SMW Blue Label products for off-site assemblies or fabrications.

D. This Section does not refer to construction material normally purchased pre-

assembled or manufactured, it references Project Work normally and historically done on-site or in Local Union fabrications shops.

E. If any dispute should arise with respect to this Section, the Contractors agree to install any off-site assemblies or fabricated items regardless of the source, at the Owner or its Project Manager's instruction. The parties shall endeavor to settle such dispute in the Labor Management forum or appropriate sub-committee before a grievance is filed under Article 9.

VI. ARTICLE 6 – MANAGEMENT RIGHTS

SECTION 6.1 RESERVATION OF RIGHTS

Except as expressly limited by a specific provision of this Agreement, Contractors retain full and exclusive authority for the management of their operations including, but not limited to: the right to direct the Project Work force, including determination as to the number to be hired and the qualifications therefore; the promotion, transfer, layoff of its employees; or the discipline or discharge for just cause of its employees; the assignment and schedule of Project Work; the promulgation of reasonable Project Work rules; and the requirement, timing and number of employees to be utilized for overtime Project Work. Nothing contained herein shall be construed so as to allow direction of an employee to perform Project Work outside the jurisdiction of that employee's Labor Union affiliation, if any. No rules, customs, or practices which limit or restrict productivity or efficiency of the individual and/or joint working efforts of employees shall be permitted or observed. The Contractor may utilize any methods or techniques of construction of its choosing which are consistent with the Contractor's agreement(s) with Owner. Contractors hereby agree that the Owner may require additional employees and/or overtime as necessary to ensure the Project Work is not delayed, by providing written notice of same to the Contractor.

SECTION 6.2 MATERIALS, METHODS & EQUIPMENT

Except as expressly limited by a specific provision of this Agreement and in any Contractor's agreement(s) with Owner, there shall be no limitation or restriction upon the Contractor's choice of materials, techniques, methods, technology or design, nor, regardless of source or location, upon the full use and installation of equipment, machinery, package units, pre-cast, pre-fabricated, pre-finished, or pre-assembled materials, tools, or other labor-saving devices. Except for those items of equipment, machinery, package units, pre-cast, pre-fabricated, pre-finished, or pre-assembled materials, tools or other labor-saving devices specified in the contract (which must be provided in accordance with the technical specifications), Contractors may, without restriction, install or use materials, supplies, or equipment regardless of their source. The on-site installation or application of such items shall be performed by the craft having jurisdiction over such Project Work; provided, however, it is recognized that other personnel having special qualifications may participate in the installation, check-off or testing of specialized or unusual equipment or facilities as designated by the Contractor.

SECTION 6.3 NEW MATERIALS, TOOLS, DEVICES, TECHNOLOGY, EQUPMENT &

METHODS

It is recognized that the use of new materials, tools, labor-saving devices, technology, equipment and/or methods of performing work will be initiated by Contractor from time to time during the Project. The Unions agree that they will not in any way restrict the implementation of such new materials, tools, labor-saving devices, technology, equipment or work methods. If there is any disagreement between the Contractor and Unions concerning the manner or implementation of such new items, the implementation shall proceed as directed by the Contractor, and the Unions shall have the right to grieve and/or arbitrate the dispute as set forth below.

VII. ARTICLE 7 – WORK STOPPAGES AND LOCKOUTS

SECTION 7.1 NO STRIKES-NO LOCK OUT

There shall be no strikes, sympathy strikes, picketing, work stoppages, slowdowns, demonstrations, or other disruptive activity on Project Work site for any reason by any signatory to this Agreement. There shall be no Union or concerted or employee activity which disrupts or interferes with the Project Work. Should any employee breach this provision, the Local Unions will use their best efforts to immediately end the breach of this section and return all employees to work. There shall be no lockout by any signatory to this Agreement.

In accordance with Section 220-f of the Labor Law and Section 139-h of the State Finance Law, if any contract exceeds $5,000, the Contractor agrees, as a material condition of the contract, that neither the Contractor nor any substantially owned or affiliated person, firm, partnership or corporation has participated, is participating, or shall participate in an international boycott in violation of the federal Export Administration Act of 1979 (50 USC App. Sections 2401 et seq.) or regulations thereunder. If such Contractor, or any of the aforesaid affiliates of Contractor, is convicted or is otherwise found to have violated said laws or regulations upon the final determination of the United States Commerce Department or any other appropriate agency of the United States subsequent to the contract's execution, such contract, amendment or modification thereto shall be rendered forfeit and void. The Contractor shall so notify the Owner within five (5) business days of such conviction, determination or disposition of appeal (2 NYCRR § 105.4).

SECTION 7.2 DISCHARGE FOR VIOLATION

Contractor may discharge any employee violating Section 7.1, above, and any such employee will not be eligible thereafter for referral under this Agreement for a period of 100 working days.

SECTION 7.3 NOTIFICATION

If a Contractor contends that any employee has violated this Article, it shall notify the Council of such fact, with copies of the notification to the Local Union involved. The Council and Local Union shall instruct, order, and otherwise use their best efforts to cause the employee(s) to immediately cease and desist from any violation of this Article and return all employees to work. The Council shall not be liable for the unauthorized acts of a Local Union or its members. Similarly, a Local Union and its members shall not be liable for any unauthorized acts of the Council or of

another Local Union.

SECTION 7.4 EXPEDITED ARBITRATION

Contractor or Union alleging a violation of Section 7.1 of this Article or Section 8.3(D)(2) of Article 8 shall utilize the expedited procedure set forth below (in lieu of, or in addition to, any actions at law or equity) that may be brought.

A. A party invoking this procedure shall notify J. J. Pierson, Esq. (tel: (833) 359-8100; email: insert), Neal M. Eiseman, Esq. (tel: (917) 603-3725; email: neal@eisemanadr.com), and Thomas Hines (tel: (518) 469-7111; email: tomehinesri@gmail.com), who shall alternate as Arbitrator under this expedited arbitration procedure. If the Arbitrator next on the list is not available to hear the matter within 24 hours of notice, the next Arbitrator on the list shall be called. Copies of such notification will be simultaneously sent to all parties (the alleged violator, the Council, the Local Union, the Contractor, and the Owner).

B. The Arbitrator shall hold a hearing within 48 hours of receiving the notice invoking the procedure if it is contended that the violation still exists. The Arbitrator shall provide at least 24 hours' notice (excluding Sundays and holidays) to all parties as to time and place of the hearing. In the event overnight delivery is used to supply notice, the 24 hours' notice shall commence upon delivery of the notice.

C. All notices pursuant to this Article must be delivered to all parties (alleged violator, the Council, Local Union, Contractor, and Owner) and may be provided by telephone, hand delivery, fax, email, or confirmed overnight delivery. The hearing may be held on any day including Saturdays or Sundays. The hearing shall be completed in one session which shall not exceed 8 hours duration (no more than 4 hours being allowed to either side to present their case and conduct their cross examination) unless otherwise agreed. A failure of any party to attend the hearing shall not delay the hearing of evidence by those present or the issuance of an award by the Arbitrator.

D. (i) Section 7.1 hearings:

The sole issue at the hearing shall be whether a violation of Section 7.1 occurred. If a violation is found to have occurred, the Arbitrator shall issue a Cease-and-Desist Award restraining such violation and serve copies on all parties. The Arbitrator shall have no authority to consider any matter in justification, explanation or mitigation of such violation or to award damages (any damages issue is reserved solely for court proceedings, if any). The Award shall be issued in writing within 3 hours after the close of the hearing, and may be issued without an Opinion. If any involved party desires an Opinion, one shall be issued within 15 calendar days, but its issuance shall not delay compliance with, or enforcement of, the Award.

(ii) Section 8.3(D)(2) hearings:

The sole issue at the hearing shall be whether a violation of Section 8.3(D)(2)

occurred. If a violation is found to have occurred, it shall be prima facie evidence of intentional mis-assignment, and the Arbitrator shall issue an immediate stop- work order with respect to the Project Work involved and reassign the Project Work as necessary. The Arbitrator is also authorized to (a) award damages or back pay in order to make the aggrieved trade whole, and (b) remove the offending Contractor from the job in egregious situations.

E. An Award issued under this procedure may be enforced in the Supreme Court of the State of New York, Orange County, upon the filing of this Agreement together with the Award. Notice of the filing of such enforcement proceedings shall be given to all parties. In any court proceeding to obtain a temporary or preliminary order enforcing the Arbitrator's Award as issued under this expedited procedure, the involved Union and Contractor waive their right to a hearing and agree that such proceeding may be commenced by order to show cause. Such agreement does not waive any party's right to participate in a hearing for a final court order of enforcement or in any contempt proceeding.

F. Any rights created by statute or law governing arbitration proceedings which are inconsistent with the procedure set forth in this Article, or which interfere with compliance thereto, are hereby waived by the Contractors and Unions to whom they accrue.

G. The fees and expenses of the Arbitrator shall be equally divided between the involved Contractor and Union.

SECTION 7.5 ARBITRATION OF DISCHARGES FOR VIOLATION

Procedures contained in Article 9 shall not be applicable to any alleged violation of this Article, with the single exception that an employee discharged for violation of Section 7.1, above, may have recourse to the procedures of Article 9 to determine only if the employee did, in fact, violate the provisions of Section 7.1 of this Article; but not for the purpose of modifying the discipline imposed where a violation is found to have occurred.

VIII. ARTICLE 8 – LABOR MANAGEMENT COMMITTEE

SECTION 8.1 SUBJECTS

The Project Labor Management Committee ("Committee") will meet as established by the Committee to: (1) promote harmonious relations among the Contractors and Unions; (2) enhance safety awareness, cost effectiveness, and productivity of construction operations; (3) protect the public interest; (4) discuss matters relating to staffing and scheduling with safety and productivity as considerations; (5) review Affirmative Action and equal employment opportunity matters pertaining to the Project, if any, and increase work opportunity within THE TOWN OF NEW WINDSOR for Town residents.

SECTION 8.2 COMPOSITION

The Committee shall be jointly chaired by a designee of the Owner and the Council. It may include representatives of the Local Unions and Contractors involved in the issues being discussed. The Committee may conduct business through mutually agreed upon sub-committees.

SECTION 8.3 PRE-JOB CONFERENCE

So that the start and continuation of Project Work may progress without interruption, the Committee shall require each Contractor and Subcontractor of whatever tier to conduct a pre-job conference with the Council prior to commencing work. The Construction Manager or General Contractor shall be advised in advance of such conferences and may participate if they wish. This pre-job conference with the Council is in addition to any pre-job/pre-construction conferences required by the Project Contract Documents.

The purpose of the pre-job conference with the Council shall be for the parties to gain an understanding of each Contractor's proposed work assignments, the standard work day and work week, the number of employees to be employed, the method of referral, the applicable wage rates and fringe benefit contributions and any other matters in accordance with this Agreement.

Proposed Trade Assignments.

(1) In conjunction with the pre-job conference with the Council required by this Section, each Contractor shall fill out the attached Schedule E - Proposed Trade Assignments identifying all Subcontractors and indicating what trades will be used to perform the Project Work. This form shall be submitted to the Council at least fourteen (14) days in advance of the commencement of Project Work.

(2) If any Local Union(s) objects to or disagrees with the Proposed Trade Assignment of either the Contractor or Subcontractor, the Local Union will state its objection within three (3) days of the submission of the Proposed Trade Assignments and there shall be a good faith discussion among the Contractor or Subcontractor and the objecting Local Union and other affected Unions to resolve the matter.

(3) If no resolution is reached, any involved Local Union may submit their objection position in writing, together with support documentation, within seven (7) calendar days of the submission of the Proposed Trade Assignments to the Contractor or Subcontractor with a copy to all affected Local Unions. Failure of any objecting Local Union and/or other affected Unions to timely object or submit such objection positions in writing waives any objection to the Proposed Trade Assignments.

(4) The Contractor or Subcontractor will review all submitted supporting documentation regarding the Proposed Trade Assignments and will submit to the Construction Manager or Clerk of Works, the Council, and all affected Local Unions a "Final Trade Assignment" letter within fourteen (14) days calendar days of the pre-job meeting at which the Proposed Trade

Assignments were made.

Disputes and Violations.

(5) Unresolved disputes concerning trade assignments shall be handled in accordance with Section 10.1, 10.2, and 10.3 of Article 10 in accordance with the National Plan for Settlement of Jurisdictional Dispute in the Construction Industry established by the Building and Construction Trades Department, incorporated by reference in Schedule D, provided however, that disputes concerning intra-trade assignments (assignments between trades within the same International Union) will be determined by the applicable International Union.

(6) Contractor's failure to conduct a pre-job conference with the Council, failure to include all required parties in a pre-job conference with the Council, or failure to adhere to agreed-upon Schedule E trade assignments is a violation of this Agreement and prima facie evidence of intentional mis-assignment. Alleged violations of this provision shall be considered a lock-out and subject to the expedited arbitration procedures of Article 7, Section 7.4.

(7) All remaining unresolved issues shall be subject to the provisions of Article 9.

IX. ARTICLE 9 - GRIEVANCE & ARBITRATION PROCEDURE

SECTION 9.1 CLOSE COOPERATION

The Contractors, Unions, and employees, collectively and individually, realize the importance to all parties to maintain continuous and uninterrupted performance of Project Work and agree to resolve disputes in accordance with the grievance-arbitration provisions set forth in this Article.

SECTION 9.2 PROCEDURE

Any question, dispute or claim arising during the term of this Agreement involving the interpretation or application of this Agreement (other than jurisdictional disputes and alleged violations of Section 7.1, and Section 8.3(D)(2)), shall be considered a grievance and shall be resolved pursuant to the following procedure.

Step 1:

A. When any employee covered by this Agreement feels aggrieved by a claimed violation of this Agreement, the employee shall give notice of the claimed violation to the Local Union representative or job steward, who shall notify the Project Work site representative of the involved Contractor and the Construction

Manager or Clerk of Works. To be timely, such notice must be in writing given within 7 calendar days after the act, occurrence or event giving rise to the grievance. Strict compliance with this 7-day notice is a condition precedent to proceeding with such grievance. The Local Union representative or the job steward shall meet with the Project Work site representative of the involved Contractor and the Construction Manager or Clerk of Works, if applicable, and endeavor to adjust the matter within 7 calendar days after timely notice has been given. The representative of the involved Contractor shall keep the minutes of the meeting and shall respond to the Union representative in writing, with copy to the Construction Manager or Clerk of Works, within twenty-four (24) hours after the conclusion of the meeting. If they fail to resolve the matter within the prescribed period, the grieving party, may, within 7 calendar days thereafter, pursue Step 2 of the grievance procedure by serving the involved Contractor with written copies of the grievance setting forth a description of the claimed violation, the date on which the grievance occurred, and the provisions of the Agreement alleged to have been violated. Grievances and disputes settled at Step 1 are non-precedential except as to the specific Local Union, employee and Contractor directly involved, unless the settlement is accepted in writing by the Labor-Management Committee as creating a precedent with respect to Project Work.

B. Should any signatory to this Agreement have a dispute [excepting jurisdictional disputes and alleged violations of Section 7.1 or Section 8.3(D)(i) or (ii) with any other signatory to this Agreement and, if after conferring, a settlement is not reached within 7 calendar days, the dispute may be reduced to writing and the grieving party may proceed to Step 2 in the same manner as outlined in subparagraph (a) for the adjustment of employee grievances.

Step 2:

Upon timely receiving a written grievance, the involved Contractor shall notify and schedule a meeting with the Business Manager of the involved Local Union, the Council, and the Construction Manager or Clerk of Works, if applicable, and their respective representatives, for the purpose of arriving at a satisfactory settlement. Such meeting shall be held within 7 calendar days of the involved Contractor's receipt of the written grievance. Meeting minutes shall be kept by the Contractor with copies to the parties within twenty-four (24) hours.

Step 3:

A. If the grievance shall have been submitted but not resolved after Step 1 and Step 2, any of the participating Step 2 entities may, within 21 calendar days after the initial Step 2 meeting, submit the grievance in writing (copies to other participants, including the Construction Manager) along with copies of the minutes from Step 1 and Step 2, to the acting Arbitrator under this procedure alternating between J.J. Pierson, Neal M. Eiseman, and Thomas Hines. The Labor Arbitration Rules of the American Arbitration Association shall govern the conduct of the arbitration hearing, at which all Step 2 participants shall be parties. The decision of the

Arbitrator shall be final and binding on the involved Contractor, Local Union, and employees, and the fees and expenses of such arbitration shall be borne equally by the involved Contractor and Local Union. Said decision shall be issued within 7 days of the arbitration hearing. Work on the Project must continue in the meantime.

B. Failure of the grieving party to adhere to the time limits set forth in this Article shall render the grievance null and void. These time limits may be extended only by written consent of the Construction Manager, if applicable, the involved Contractor, and the involved Local Union at the particular step where the extension is agreed upon. The Arbitrator shall have authority to make decisions only on the issues presented to him and shall not have the authority to change, add to, delete or modify any provision of this Agreement.

X. ARTICLE 10 - JURISDICTIONAL DISPUTES

SECTION 10.1 ASSIGNMENT

The assignment of Project Work shall be solely the responsibility of the Contractor performing the Project Work involved, subject to the pre-job conference with the Council and the procedures set forth in Section 8.3(C), and such Project Work assignments shall be in accordance with the National Plan for the Settlement of Jurisdictional Disputes in the Construction Industry ("National Plan"), incorporated by reference into Schedule D, or any successor Plan approved by the Building & Construction Trades Department, AFL-CIO

SECTION 10.2 PROCEDURE FOR SETTLEMENT OF JURISDICTIONAL DISPUTES

All jurisdictional disputes involving Project Work shall be settled according to the National Plan, provided however, that disputes concerning intra-trade assignments (assignments between trades within the same International Union) will be determined by the applicable International Union.

SECTION 10.3 NO DISRUPTIONS

There will be no strikes, work stoppages, or slowdowns, arising out of any jurisdictional dispute. Pending the resolution of the dispute, the Project Work shall continue uninterrupted and as assigned by each Contractor. No jurisdictional dispute shall excuse a violation of Article 7.

SECTION 10.4 AWARD

Any jurisdictional award pursuant to this Article shall be final and binding on the disputing Unions and the involved Contractor on this Project only and may be enforced in the Supreme Court of the State of New York, Orange County. Such award or resolution shall not establish a precedent on any other construction work not covered by this Agreement.

SECTION 10.5. LIMITATIONS

Awards made under this Article shall determine only to whom the disputed Project Work belongs. The deciding person or group hereunder shall have no authority to (a) assign Project Work to a double crew, that is, to more employees than the minimum required by the Contractor to perform the Project Work involved; (b) assign work to employees who are not qualified to perform the work involved; or (c) assign Project Work being performed by non-Union employees to Union employees. This provision does not prohibit the establishment, with the agreement of the involved Contractor, of composite crews where more than one (1) employee is needed for the job.

XI. ARTICLE 11 - WAGES AND BENEFITS

SECTION 11.1 CLASSIFICATION AND HOURLY RATE

All employees covered by this Agreement shall be classified in accordance with the work performed and paid the wage rates applicable for those classifications as required by the Schedule A applicable to the work. The term "straight time" in this Agreement shall mean the hourly wage rate applicable for those classifications as required by the applicable New York State Labor Law Section 220 ("Section 220") prevailing wage determination. The Davis Bacon rates required by the Environmental Facilities Corporation are set forth in the EFC packet attached to this Agreement. In no event shall an employee covered by this Agreement be paid less than the applicable rate required per Schedule A.

SECTION 11.2 EMPLOYEE BENEFITS

A. Unless expressly provided differently in this Agreement, Contractors agree to pay employee benefits/supplements on behalf of all of their employees covered by this Agreement in the amounts required by the applicable Section 220 schedule in effect. Except as provided herein, the Contractors agree that such payments shall be made to those established jointly trusteed employee benefit funds designated in the applicable Schedule A agreement, and in the amounts so designated, to the extent such payments are required by and satisfy the Section 220 obligation. Bona fide jointly trusteed fringe benefit plans established or negotiated through collective bargaining during the life of this Agreement may be added if they similarly fall within Section 220. Contractors not otherwise contractually bound to do so, shall not be required to contribute to non-Section 220 benefits, trusts or plans; however, this provision does not relieve Contractors which are signatory to local collective bargaining agreements with any Local Union from complying with the benefit requirements for all funds contained in those collective bargaining agreements.

C. Notwithstanding Section 11.2(A):

(1) Contractors who designate employees pursuant to Article 4 may satisfy the above benefits obligation with respect to those employees by: (1) providing those employees with coverage under their private benefit plans for health, welfare, pension, annuity and 401(k); or (2) paying the full amount of such benefit to the employee in employees' wages. The total benefit payments

to be made on behalf of each such employee must equal the total Section 220 benefit/supplement amount. If the Contractor's contribution into the private benefit plan for the above funds is less than the amount required by Section 220, the difference must be paid to the employee in cash. Payments of other benefits covered under Section 220 shall be paid to the respective Unions on behalf of each employee.

(2) This same option shall apply with respect to any other employee who is referred to the Contractor through the hiring hall process provided such employee was previously employed by the Contractor and was a participant in a bona fide private benefit plan maintained by the Contractor which satisfies the requirements of Section 220.

(3) The option for a private plan equivalent supplement shall not apply to contributions into Joint Apprentice Training Committee (JATC), or similar apprentice funds designated in the applicable Schedule A agreement, if the Contractor does not have an apprentice training program approved by the Department of Labor (However, all Contractors with contracts for this Project in excess of $500,000 must participate in apprenticeship training programs pursuant to New York State Labor Law §222(2)(e)). Upon request by the Council, any Contractor providing coverage under this provision will provide the Council with documentation of benefit payments made to individual employees during the term of their employment on the Project.

(4) Contractors who exercise the option under Section 11.2(B) of this Article to pay into their own private benefit plans rather than the applicable jointly trusteed funds designated in the applicable Schedule A agreement shall be responsible for and guarantee employee benefit/supplement payments and shall indemnify and hold harmless the jointly trusteed funds designated in the applicable Schedule A agreement against any and all benefit/ supplement claims by its employees.

D. Contractors who contribute to jointly trusteed funds under this Section agree to be bound by the written terms of the legally-established jointly trusteed Trust agreements specifying the detailed basis on which payments are to be paid into, and benefits paid out of, such trust funds but only with regard to Project Work done and only for those employees for whom this Agreement requires such benefit payments. Notwithstanding the foregoing, a Contractor's liability shall be at all times limited to the amount of contributions required to be made to the Trust Funds.

E. Each Contractor shall be responsible for and guarantee the payment of all required fringe benefits on the Project. The Local Unions and/or the Council shall notify the Construction Manager or Clerk of Works within 120 hours excluding weekends whenever a Contractor or Subcontractor fails to make a required benefit payment and such delinquency remain outstanding after 30 calendar days. Notification must be in writing and may be by email. If written notice of such a delinquency is received by the Construction Manager or Clerk of Works within that 120-hour period

it shall withhold from any funds due to the delinquent Contractor the amount of that delinquency, up to the total amount due, until any dispute regarding the delinquency has been resolved. The Construction Manager or Clerk of Works shall have no other obligation with respect to contributions owed by any Contractor (or its Subcontractor); but that each Contractor shall continue to be obligated with respect to contributions based on Project Work done by that respective Contractor. If notice of a delinquency is not received by the Construction Manager or Clerk of Works within the required time periods, Owner shall have no basis upon which to withhold, with respect to that delinquency, any part of a payment which is otherwise due. Construction Manager or Clerk of Works shall require Contractors to submit proof of benefit payment with pay request.

XII. ARTICLE 12 - HOURS OF WORK, PREMIUM PAYMENTS, SHIFTS AND HOLIDAYS

SECTION 12.1 WORK WEEK AND WORK DAY

A. Unless otherwise provided for in this Agreement, the standard work week shall be five days, Monday through Friday, eight hours per day plus ½ hour unpaid lunch period each day. The starting time for the standard work week shall start at either 7:00 a.m., 7:30 a.m., or 8:00 a.m. Multiple starting times shall be allowed.

B. Four-tens: notwithstanding any other provision of the Agreement, when working a four-day work week, the work shall consist of 4 days, Monday through Thursday, ten hours per day plus½ hour unpaid lunch period at the straight time rate. The starting time for four-tens shall be 7:00 a.m., 7:30 a.m., or 8:00 a.m. A three-day minimal notice shall be required for four-tens to the respective involved Unions.

C. On a 5-day work week, Saturday may be used as a make-up day at straight time to fulfill the 40-hour work week due to inclement weather. On Saturday, the earliest start time shall be 8:00 am. On a 4-day work week, Friday may be used as a make-up day at straight time to fulfill the 40-hour work week. Make-up days shall be scheduled for a minimum of 8 hours, except in the case of inclement weather in which Section 12.5 shall apply. This minimum shall also apply when more than one shift or multiple shifts are worked.

D. The changing of the regular starting time, except in the case of overtime and the switch from a 5- day and 4-day work weeks shall be a 4-week minimum.

SECTION 12.2 OVERTIME

Overtime pay for hours outside of the standard work week and work day, defined in Section 12.1, and all work on Saturdays shall be paid at time and one half the hourly rate and benefits will be paid on straight time. All work on Sundays shall be paid at two times the hourly rate and benefits will be paid at straight time.

SECTION 12.3 SHIFTS

A. Flexible Schedules - Scheduling of shift work, including Saturday and Sunday work, shall be within the discretion of the Contractor in order to meet Project Work schedules and existing Project Work conditions. Shifts must have prior approval of the Construction Manager or Clerk of Works and Owner and must be scheduled with not less than three work days' notice to the Local Union.

B. Second and/or Third Shifts - Saturday and/or Sunday Work.

The second shift shall start between 3 p.m. and 6 p.m. and the third shift shall start between 11 p.m. and 2 a.m. Shift differentials shall be straight time plus fifty percent (50%) of the applicable Schedule A agreement shift differential. No other premium or payments for such work shall be required unless such work is in excess of 40 hours during the week. There shall be no reduction in hours worked on a second and/or third shift, except that when 3 shifts are working together, the length of one or more shifts can be reduced to accommodate a 24- hour day and only actual hours worked will be paid. Work performed on Saturdays or Sundays shall be paid as provided in the applicable Schedule A Agreement.

C. To clarify above, Schedule A Shift Differential designated percentage rates vary according to each trade's prevailing Collective Bargaining Agreement. Shift work as part of this Project Labor Agreement is 50% of the designated percentage of the shift percentages of each trade, for example if a trade's shift differential is 15% it would be 7.5%.

SECTION 12.4 HOLIDAYS

A. Schedule - There shall be seven (7) recognized holidays:

- New Year's Day,
- President's Day,
- Memorial Day
- Fourth of July
- Labor Day
- Thanksgiving Day
- Christmas Day

All said holidays shall be observed on the dates designated by New York State Law. In the absence of such designation, they shall be observed on the calendar date, except that holidays which occur on Sunday shall be observed on the following Monday and holidays which occur on a Saturday shall be observed on the previous Friday.

B. Payment-Regular holiday pay, if any, for work performed on a recognized holiday shall be in accordance with the applicable Schedule A agreement. There will be no benefits paid on holidays unless worked. Pay for a recognized holiday when not worked shall be paid as per Schedule A.

C. Exclusivity - No holidays other than those listed in Section 12.4 shall be recognized or observed in relation to holiday pay and benefits.

SECTION 12.5 REPORTING PAY

A. When on a five-day work week, employees who report to the work location pursuant to a regular schedule and who are not provided with work for whatever reason, shall receive two (2) hours reporting pay, four (4) hours if work starts and eight (8) hours pay if work occurs after the 4th hour except in the case of inclement weather in which hours worked after the four hours shall be paid and when on a four-day work week with a 10-hour day, workers shall receive three (3) hours reporting pay, four (4) hours if work starts and ten (10) hours pay if work occurs after the 5th hour except in the case of inclement weather in which hours worked after the five (5) hours shall be paid.

B. When an employee who has completed his or her scheduled shift and has left the Project site is "called out" to perform special work of a casual, incidental, or irregular nature, the employee shall receive pay for actual hours worked at applicable straight time or overtime rates in accordance with this Agreement, but no less than a minimum guarantee of two (2) hours at the employee's straight time rate.

C. When an employee leaves the job or work location of their own volition, is discharged for cause, or is not working as a result of the Contractor's invocation of Section 12.8 below, he or she shall be paid only for the actual time worked.

D. There shall be no pay for time not actually worked except as specifically set forth in this Article 12 and where an applicable Schedule A agreement applies to Forepersons, Stewards and Lead Engineer in reference to pay.

SECTION 12.6 PAYMENT OF WAGES

A. Payday: Payment shall be made by check, drawn on a New York bank with branches located within commuting distance of the job site. Paychecks shall be issued by the Contractor at the job site by 3:00 p.m. on Thursdays. In the event that the following Friday is a bank holiday, paychecks shall be issued on Wednesday of that week. Not more than one week's wages shall be held back in any pay period. Paycheck stubs shall contain the name and business address of the Contractor, together with an itemization of deductions from gross wages.

B. Termination: Employees who are laid off or discharged for cause shall be paid in full for that which is due them at the time of termination. The Contractor shall also provide the employee with a written statement setting forth the date of layoff or discharge.

SECTION 12.7 INJURY/DISABILITY

An employee who, after commencing Project Work, suffers a work-related injury or disability while performing Project Work duties, shall receive no less than eight (8) hours wages

for that day. Further, the employee shall be rehired at such time as the employee is able to return to duties provided there is still Project Work available for which the employee is qualified and able to perform.

SECTION 12.8 EMERGENCY WORK SUSPENSION

A Contractor may, if considered necessary for the protection of life, property, and/or safety of employees or others, suspend all or a portion of Project Work. In such instances, employees shall be paid for actual time worked; provided however, that when a Contractor requests that employees remain at the job site available for Project Work, employees shall be paid for "stand-by" time at their hourly rate of pay.

SECTION 12.9 TIME KEEPING

Contractors may utilize brassing or other systems to check employees in and out. Each employee must check in and out. Contractors will provide adequate facilities for checking in and out in an expeditious manner.

SECTION 12.10 BREAK PERIODS

There will be no rest periods, organized coffee breaks or other non-working time established during working hours. Individual coffee containers will be permitted at the employee's work location.

XIII. ARTICLE 13 - APPRENTICESHIP & HELMETS TO HARDHATS

SECTION 13.1 APPRENTICE RATIOS

Recognizing the need to maintain continuing supportive programs designed to develop adequate numbers of competent workers in the construction industry and to provide craft entry opportunities for minorities, women, service-disabled veterans, and economically-disadvantaged non-minority males and females, Contractors will employ apprentices in their respective crafts to perform such Project Work as is within their capabilities and that is customarily performed by the craft in which they are indentured. Contractors may utilize apprentices and such other appropriate classifications as are contained in the applicable Schedule A agreement in a ratio of not less than twenty-five percent (25%) of the work force by craft (without regard to whether a lesser ratio is set forth in the applicable Schedule A agreement), unless the applicable Schedule A agreement provides for a higher percentage. The first person assigned to the job shall be a Journeyman. The second person assigned may be an apprentice. Subsequent assignments shall be Journeymen until the applicable ratio is achieved. This assignment shall be repeated until staffing needs are satisfied. Apprentices and such other classifications as are appropriate will be employed in a manner consistent with the provisions of the applicable Schedule A agreement.

SECTION 13.2 NYS DEPARTMENT OF LABOR - APPRENTICESHIP

To assist the Contractors in attaining a maximum effort on this Project, the Unions agree to work in close cooperation with, and accept monitoring by, the New York State Department of Labor to ensure that minorities and women are afforded every opportunity to participate in apprenticeship programs that result in the placement of apprentices on this Project.

SECTION 13.3 NEW YORK HELMETS TO HARDHATS

The Contractors and the Unions desire to facilitate the entry into the building and construction trades of veterans who are interested in careers in the building and construction industry. The Contractors and the Unions agree to utilize the services of the Center for Military Recruitment, Assessment and Veterans Employment (the "Center") and the Center's "New York Helmets to Hardhats" program as a resource for preliminary orientation and assessment of construction aptitude; referral to apprenticeship programs or hiring halls; counseling and mentoring; and support networks, employment opportunities, and other needs as identified by the parties.

The Unions and the Contractors agree to work with the Center to create and maintain an integrated database of veterans interested in working on the Project as well as information about apprenticeship and employment opportunities related to this Project. To the extent permitted by law, the Unions will give credit to such veterans for bona fide, provable past experience.

SECTION 13.4 PARTICIPATION GOALS (MBE, WBE, SDVOB, LABOR SURPLUS AREA)

A. The Environmental Facilities Corporation funded the Project with minority and women-owned business goals of $4,435,560 and service-disabled veteran-owned business goals of $887,112. THE TOWN OF NEW WINDSOR, Construction Manager or Clerk of Works, Contractors, the Hudson Valley Building and Construction Trades Council and its affiliated Unions are committed to meeting these and any other federal and New York State Participation Goals applicable to the Project, and shall perform the Project Labor Agreement in alignment with the current goals or standards set for by federal or New York State requirements for Minority Business Enterprises (MBE), Woman Owned Business Enterprise (WBE), Service-Disabled Veteran Owned Business (SVDOB), and federal Labor Surplus Area requirements, to ensure participation on the project by MBE, WBE and SVDOB firms and job-seekers from federal Labor Surplus Areas (for 2022, City of Middletown, Town of Monroe, and City of Newburgh) while maintaining fiscal responsibility.

B. Outreach by the Construction Manager or Clerk of Works, if applicable, Contractors, Hudson Valley Building and Construction Trades and affiliated Unions and contractor associations to ensure participation goals of NYS Certified MBE, WBE and SDVOB firms and Labor Surplus Area recruitment are met will be required through the project.

C. Where the above requirements of Section 13.4 do not apply, reference in this section shall not apply.

XIV. ARTICLE 14 - NO DISCRIMINATION

SECTION 14.1 COOPERATIVE EFFORTS

The Contractors and Unions agree that they shall not discriminate against any employee or applicant for employment because of race, creed, color, religion, sex, national origin, disability, marital status, age, Union or non-Union status, real or perceived sexual orientation or any other status protected by law, in any manner prohibited by law or regulation. It is recognized that special procedures may be established by Contractors and Local Unions and the New York State Department of Labor for the training and employment of persons who have not previously qualified to be employed on construction projects of the type covered by this Agreement. The parties to this Agreement shall assist in such programs and agree to use their best efforts to ensure that the goals for female and minority employment are met on this Project. In this regard, the Contractor shall request of each employment agency, labor union, or authorized representative of workers with which it has a collective bargaining or other agreement or understanding, to furnish a written statement that such employment agency, labor union, or representative will not so discriminate on the basis of race, creed, color, religion, sex, national origin, disability, marital status, age, Union or non-Union status, real or perceived sexual orientation or any other status protected by law, and that such employment agency, labor union, or representative will affirmatively cooperate in the implementation of the Contractor's obligations herein. Nothing in this section shall be grieveable.

SECTION 14.2 LANGUAGE OF AGREEMENT

The use of the masculine or feminine gender in this Agreement shall be construed as including all genders.

XV. ARTICLE 15 - GENERAL TERMS SECTION 15.1 PROJECT RULES

SECTION 15.1 PROJECT RULES

A THE TOWN OF NEW WINDSOR, the Construction Manager or Clerk of Works, if applicable, and Contractors may establish from time to time such reasonable Project rules as are necessary for the good order of the Project. These rules shall be outlined at the pre-job conference with the Council, detailed in the contract documents, approved by the President of the Council, posted at the Project site, and may be amended thereafter as necessary.

B. Security Protocols - The Construction Manager or Clerk of Works, if applicable, with Owner's approval and in their sole discretion, will determine security protocols for the entire Project Site. Strict compliance by all Contractors and subcontractors of all tiers and their respective personnel with security procedures, protocols, and directives issued by these entities or its delegated, is required at all times.

SECTION 15.2 TOOLS OF THE TRADE

The welding/cutting torch and chain fall are tools of the trade having jurisdiction over the Project Work performed. Employees using these tools shall perform any of the Project Work of the trade. There shall be no restrictions on the emergency use of any tools or equipment by any qualified employee or on the use of any tools or equipment for the performance of Project Work within the employee's jurisdiction.

SECTION 15.3 SUPERVISION

Employees or other personnel shall work under the supervision of the craft foreperson or general foreperson for the applicable hiring or subcontracting contractor.

SECTION 15.4 FULL WORKDAY

A. Employees shall be at their Project Work area at the starting time established by the Contractor.

B. The signatories to this Agreement reaffirm their policy of a fair day's work for a fair day's wage.

XVI. ARTICLE 16 - SAFETY PROTECTION OF PERSON AND PROPERTY

SECTION 16.1 SAFETY REQUIREMENTS

It shall be the responsibility of each Contractor to ensure safe working conditions and employee compliance with any safety rules contained herein or established by Contractor. The Contractors shall establish their own safety programs implementing safety measures, policies, and standards conforming to those required or recommended by governmental and quasi-governmental authorities having jurisdiction. Each Contractor will ensure that applicable OSHA and New York State mandated safety requirements are at all times maintained on the Project and the employees and Unions agree to cooperate fully with these efforts. Employees must perform their Project Work at all times in a safe manner and protect themselves and the property of the Contractor and Owner from injury or harm. Failure to do so may be grounds for discipline, including discharge.

The Owner, Construction Manager, or Clerk of Works is not responsible for identifying unsafe practices, nor for failure to stop the Contractors' unsafe practices; and the Owner, Construction Manager's, or Clerk of Works' failure to stop the Contractors' unsafe practices shall not relieve the Contractors of complete responsibility for harm, injury and damages that may result.

SECTION 16.2 CONTRACTOR RULES

Employees covered by this Agreement shall at all times be bound by the reasonable safety, security, and visitor rules as established by the Contractor(s). Such rules will be referenced in the Contract Documents and may be distributed to Contractors for further distribution to personnel and/or posted in conspicuous places throughout the Project.

SECTION 16.3 INSPECTIONS

The Contractors, Owner, Architect/Engineer, and Construction Manager or Clerk of Works, if applicable, retain the right to inspect incoming shipments of equipment, apparatus, machinery, and construction materials of every kind.

The use, sale, transfer, purchase and/or possession of a controlled substance, and/or alcohol while on the Owner's premises at any time during the workday are prohibited. Contractors will implement a drug policy meeting minimum standards for Drug-Free Workplace Program. Consistent with the standards, reasonable searches as permitted under the law, including random searches, may be conducted of all employees on site. Any employee found to possess or be under the influence of an article prohibited by the standards, or refusing to be tested or consent to search, in the Construction Manager's sole discretion, may be removed from the Project site and denied future access.

The unauthorized use or possession of firearms, weapons, explosives, or incendiary material on or near the premises is prohibited. Any employee found to use or possess such firearms, weapons, explosives, or incendiary material, in the Construction Manager's sole discretion, may be removed from the Project site and denied future access.

XVII. ARTICLE 17 - TEMPORARY SERVICES

Temporary light, power, cooling, ventilation and other services shall only be required on the specific request of a Contractor and when requested shall be assigned in accordance with the Contract Documents. Temporary coverage may be provided by the supplying Contractor's employees already working under this Agreement during regular work hours. The supplying Contractor will determine the need for temporary coverage requirements during non-work hours. For safety reasons, temporary light and power panels will only be accessed by employees of the Contractor responsible for supplying the temporary light and power panels. Coverage requirements shall not require a standby employee who is not performing Project Work. There shall be no stacking of trades on temporary services. In the event temporary services are claimed by multiple trades, the matter shall be resolved pursuant to Article 10.

XVIII. ARTICLE 18 - SAVINGS AND SEPARABILITY

SECTION 18.1 THIS AGREEMENT

In the event that the application of any provision of this Agreement is enjoined, on either an interlocutory or permanent basis, or is otherwise determined to be in violation of law, the provision involved (and/or its application to a particular part of the Project, as necessary) shall be rendered, temporarily or permanently, null and void, but the remainder of the Agreement shall remain in full force and effect to the extent allowed by law. In such event, the Agreement shall remain in full force and effect for already bid and awarded or in construction aspects where the Contractor voluntarily accepts the Agreement, as altered, and the parties will immediately enter into negotiations for a substitute provision in conformity with the law and the intent of the parties hereto for contracts to be let in the future. It is understood and agreed that no work stoppage shall ensue.

SECTION 18.2 NON-LIABILITY AND NON-WAIVER

In the event of an occurrence referenced in Section 18.1 of this Article, neither Owner nor any Contractor, nor any signatory Union, shall be liable, directly or indirectly, for any action taken, to comply with any court order, inunction or determination; Project bid specifications will be issued in conformance with court orders then in effect and no retroactive payments or other action will be required if the original court determination is ultimately reversed.

Notwithstanding the foregoing, nothing in this Agreement is intended to be or shall be construed as a waiver by any Union(s) of any prevailing wage determination or schedule that is applicable to their trade for any public work that has been or may be performed in the future on any work outside the scope of this Agreement.

XIX. ARTICLE 19 - FUTURE CHANGES IN SCHEDULE A AREA CONTRACTS

SECTION 19.1 CHANGES TO AREA CONTRACTS

Each Schedule A agreement incorporated by reference into this Agreement by Schedule A shall continue in full force and effect until the Contractor and/or Union parties to the area collective bargaining agreements which are the basis for the applicable Schedule A agreement notify the Owner and Construction Manager or Clerk of Works, if applicable, in writing of the agreed upon changes in the Schedule A agreement which is applicable to the Project, and their effective dates. Such changes shall only be effective to the extent consistent with this Agreement. Any disagreement between signatories to this Agreement over the incorporation into Schedule A of provisions agreed upon in the renegotiation of area collective bargaining agreements shall be resolved in accordance with the procedure set forth in Article 9 of this Agreement.

SECTION 19.2 LABOR DISPUTES DURING AREA CONTRACT NEGOTIATIONS

The Unions agree that there shall be no strikes, work stoppages, sympathy actions, picketing, slowdowns or other disruptive activity or other violations of Article 7 affecting the Project by any Local Union involved in the renegotiation of area local collective bargaining agreements, nor shall there be any lock-out on this Project affecting a Local Union during the course of such renegotiations.

XX. ARTICLE 20 - PROJECT SPECIFIC

SECTION 20.1 WORKERS COMPENSATION ADR

At the written option of the Contractor and with the written approval of the Hudson Valley Building Trades Council, all Local Unions, Contractors and subcontractors working on this Project agree to be bound by the Collectively Bargained Workers Compensation Alternative Dispute Resolution Agreement (ADR Agreement), incorporated by reference into Schedule F to this Agreement, and to the ADR program set forth therein, by and between the Construction Industry Council of Westchester and the Hudson Valley, Inc., and the Building and Construction Trades Council of Westchester and Putnam County, New York, entered into on January 26, 2007, as amended.

SECTION 20.2 LABOR MANAGEMENT ALLIANCE

Where allowable by law, contributions on behalf of the employee and employer contributions shall be made to the Hudson Valley Building and Construction Trades Labor Management Alliance.

SECTION 20.3 CLEAN UP

A clean work site results in a safe and more productive job site. All cleanup during construction shall be performed by the trade having jurisdiction for cleanup in accordance with the Project Contract Documents. The Owner will ensure a clean and safe workplace. The Owner, Construction Manager, or General Contractor may back charge Contractors accordingly if clean

up becomes unsatisfactory.

Once construction is complete and a building, section, or floor is turned over to a professional cleaning company for final cleaning, including but not limited to, windows and floor prep, up to 33.3% of the Employees may be a direct employee of the cleaning company. Those direct employees shall be exempt from this Agreement.

SECTION 20.4 FURNITURE, FIXTURES AND EQUIPMENT (FFE)

Project work related to furniture, fixtures, and equipment that is free standing and requires no onsite assembly and is not fastened, mounted, anchored, hardwired or hard piped to any part of the building structure or surface by glue, screws, nails, mechanical fastener or by any other means is excluded from this agreement. Accordingly, for avoidance of doubt, all unloading, handling, assembly, installation and clean-up of all furniture, fixture, and equipment which requires fastening, mounting, anchoring, hardwiring or hard piped to any part of the building structure or surface by glue, nails, screws, mechanical fasteners, wire, pipe or by other means, or requires any onsite assembly shall be included Project Work under this agreement.

When the owner, construction manager or general contractor directs or contracts excluded work under this Section (20.4) to be performed, this Agreement shall apply.

XXI. ARTICLE 21 - MISCELLANEOUS

SECTION 21.1 GOVERNING LAW

This contract shall be governed by the laws of the State of New York without regard to choice of law provisions.

SECTION 21.2 ENTIRE AGREEMENT

This Agreement constitutes the entire agreement of the Parties with regard to the subject matter hereof, and supersedes all previous written or oral representations, agreements and understandings between the parties, whether expressed or implied. The Parties acknowledge and represent, by their signatures below, that the Parties have not relied on any representation, understanding, information, discussion, assertion, guarantee, warranty, collateral contract or other assurance, except those expressly set forth in the Lease and this Amendment, made by or on behalf of any other Party or any other person whatsoever, prior to the execution of this Amendment. The Parties waive all rights and remedies, at law or in equity, arising or which may arise as the result of a Party's reliance on such representation, understanding, information, discussion, assertion, guarantee, warranty, collateral contract or other assurance.

SECTION 21.3 NO ORAL MODIFICATION

No modification or amendment of any of the provisions of this Agreement will be valid unless it is in writing and signed by authorized representatives of the Parties.

SECTION 21.4 OWNER'S APPROVAL

In accordance with laws of the State of New York, if the Agreement may be made only by specified officers or board and in a specified manner that requires the approval of the Owner Board after a public hearing, the Agreement shall not be valid, effective or binding upon the Owner until it has been approved by the Owner following such public hearing.

IN WITNESS WHEREOF the parties have caused this Agreement to be executed and effective as of the 12th day of ~~December 2024~~ March, 2025.

~~February 2025~~

FOR THE HUDSON VALLEY BUILDING AND CONSTRUCTION TRADES COUNCIL:

By:----------

L. Todd Diorio, President

THE TOWN OF NEW WINDSOR:

By: .....

Stephen A. Bedetti, Supervisor

FOR CONSTRUCTION MANAGER (IF APPLICABLE):

By: .....

IN WITNESS WHEREOF the parties have caused this Agreement to be executed and effective as of the 12th day of ~~December 2024.~~ March, 2025

FOR THE HUDSON VALLEY BUILDING AND CONSTRUCTION TRADES COUNCIL:

By: _____

L. Todd Diorio, President

THE TOWN OF NEW WINDSOR:

By: _____

_____

FOR CONSTRUCTION MANAGER (IF APPLICABLE):

By: _____

FOR LOCAL UNIONS:

International Union of Bricklayers and Allied Craftworkers Local **NO. 1:**

Signed: Michael D Clifford Title: Field Rep

Email: mclifford@bacIng.com Phone: 8455224561

International Brotherhood of Boilermakers, Iron Ships Builders, Blacksmiths, Forgers Helpers District NO. 5:

Signed: Thomas F. Ryan Title: BM-ST

Email: Boilermakers Local 5@verizon.net Phone: 516 326 2500

Bricklayers and Allied Crafts, Tile, Marble & Terrazzo Union of New York & New Jersey Local NO. 7:

Signed: Sebastian Vargo Title: Field Rep

Email: SVirga@BACLocal7.com Phone: 917-734-7429

~~Bricklayer~~s United Union of Roofers, Waterproofers and Allied Workers Local NO. 8:

*** Signed: Bill W Title: Rep

Email: WWilmer@roofers8.org Phone: 646-294-1510

District Council NO. 9, International Unio. of Painters and Allied Trades, A.F.L-C.1.0:

Signed: Title: **Joseph Azzopardi**
Business Manager/Secretary Treasurer - DC9

Email: jazzopardi@dc9-net Phone: 212 255-2950 x150

Laborers International Union of N.A. Local 17:

Signed: _____ Title: Business Manager

Email: Diorio5@Hotmail.com Phone: 914-474-6220

International Association of Sheet Metal, Air, Rail and Transportation Workers (SMART) Local NO. 38:

Signed: _____ Title: Business Manager

Email: _____ Phone: 845-891-6754

International Association of HBAT and Frost Insulators and Allied Workers Local NO. 91:

Signed: _____ Title: Business Manager

Email: AW191@insulators.org Phone: (914) 788-0400

International Union of Elevators (IUEC) Local NO. 138:

Signed: NA Title: _____

Email: _____ Phone: _____

O.P.C.M.I.A. Plasters Union Local NO. 262:

Signed: _____ Title: Business Manager

Email: Palleynd@nycbc.org Phone: (914) 255-3601

North Atlantic States Regional Council of Carpenters Local NO. 279:

Signed: Scott J Smith Title: Business Manager

Email: ssmith@nasrcc.org Phone: 845-263-7516

International Brotherhood of Electrical Workers Local NO. 363:

Signed: Samuel Fratto Title: BUSINESS MANAGER

Email: SFRATTO@IBEWLU363.ORG Phone: 845-216-7023

Plumbers, Steamfitters & Service Technicians Local NO. 373:

Signed: Thomas Gandolfini Title: Business Manager

Email: t.gandolfini@ua373.com Phone: 845-206-7564

International Association of Bridge, Structural, Ornamental and Reinforcing Iron Workers Local NO. 417:

Signed: Matthew P. Stoddard Title: B.M.

Email: matts417@verizon.net Phone: (845) 629-1185

International Brotherhood of Teamsters Local Union NO. 445:

Signed: [signature] Title: Vice President

Email: jclineman@teamstersunion445.org Phone: 845-394-4763

Road Sprinkler Fitters Union Local NO. 669:

Signed: [signature] Title: Business Agent

Email: Klilley669gmail.com Phone: 914-475-9158

New York City District Carpenters Local NO. 740 & Local NO. 2287:

Signed: [signature] Title: President/Asst E.S.T.

Email: pcapurso@nycdistrictcouncil.org Phone: (212) 366-7500

United Cement Masons Local NO. 780:

Signed: Dino Salerno Title: organizer

Email: DSALERNO@NOEDC.org Phone: 914-574-3398

International Union of Operating Engineers Local NO. 825:

Signed: [signature] Title: Business Representative

Email: cwood@ivoe825.org Phone: 908-347-0502

EXHIBIT H

Aqualogics Proposal

5 Dwight Park Drive
Syracuse, NY 13209
Phone: (315) 413-0400
Fax: (315) 413-0404

Proposal # Q1-24-050-B
April 16, 2025

MHE Engineering
33 Airport Center Drive, Suite 202
New Windsor, NY 12553

Attention: Jamison Zajac, P.E.

Reference: Town of New Windsor, Ceasars Lane WWTP Expansion Project
Specification Section: 26 0912 - Control Panels and Integration

AquaLogics Systems, Inc. is pleased to offer the following proposal for your consideration.

Control Panel(s):

Qty.1- Control Building Main Control Panel (MCP) inclusive of the following:

- 72” H x 36” W x 18” D, NEMA 12 painted steel, free standing enclosure with door activated LED light, lockable handle and three-point latching system.
- Input Power: 120VAC, 1-phase, 60 Hz.
- CITEL 120VAC, 1-phase, 60 Hz. incoming power surge protector.
- Allen-Bradley branch circuit rated 120VAC control power circuit breakers as required.
- CyberPower 1000VA Uninterruptible Power Supply (UPS), 120VAC.
- Allen-Bradley, AC fuse disconnects with neon blown fuse indicator, qty. as required.
- Allen-Bradley, DC fuse disconnects with LED blown fuse indicator, qty. as required.
- PULS 240-watt, 24VDC power supply with input and output fuses as required.
- Allen-Bradley CompactLogix 5069-L320ER Programmable Logic Controller (PLC) with all required 5069 series I/O modules and accessories.
- Panel mounted Allen-Bradley PanelView Plus 7, 15” color touch screen Operator Interface Unit (OIU).
- Antaira LMX-2004G-SFP, twenty (20) port managed Ethernet switch, (16) TX ports, (4) SFP slots.
- Antaira SFP-M-T, 1GB fiber SFP transceivers as required, multimode, LC type fiber connections.
- RLH Industries Slimline fiber optic patch panel, DIN rail mount, LC-LC multimode fiber adapter plate.
- RLH Industries LC-LC duplex fiber patch cable, multimode, 2M/6.56 ft.
- Automation Direct StrideLinx SE-SL3011 Industrial VPN router.
- DCB XT-3305 Encrypted Ethernet Tunnel, supports up to eight (8) clients.
- Allen-Bradley panel mounted common alarm pilot light, red, 30-mm, push-to-test.
- Floyd Bell panel mounted alarm horn.
- Allen-Bradley panel mounted, alarm silence/reset pushbutton.
- Finder Wet floor Sensor (WFS) relays with SPDT relay output as required.
- All required relays, wire, terminal blocks and misc. control panel hardware.
- Completely factory programmed, assembled, wired and tested for proper functionality.
- UL508A Listed and Labeled.

Qty.1- MBR Building Remote I/O Panel (RIO-1) inclusive of the following:

- 72” H x 36” W x 18” D, NEMA 12 painted steel, free standing enclosure with door activated LED light, lockable handle and three-point latching system.
- Input Power: 120VAC, 1-phase, 60 Hz.
- CITEL 120VAC, 1-phase, 60 Hz. incoming power surge protector.
- Allen-Bradley branch circuit rated 120VAC control power circuit breakers as required.
- CyberPower 1000VA Uninterruptible Power Supply (UPS), 120VAC.
- Allen-Bradley, AC fuse disconnects with neon blown fuse indicator, qty. as required.
- Allen-Bradley, DC fuse disconnects with LED blown fuse indicator, qty. as required.
- PULS 240-watt, 24VDC power supply with input and output fuses as required.
- Allen-Bradley CompactLogix 5069-L330ER Programmable Logic Controller (PLC) with all required 5069 series I/O modules and accessories.
- Panel mounted Allen-Bradley PanelView Plus 7, 15” color touch screen Operator Interface Unit (OIU).
- Antaira LMX-2004G-SFP, twenty (20) port managed Ethernet switch, (16) TX ports, (4) SFP slots.
- Antaira SFP-M-T, 1GB fiber SFP transceivers as required, multimode, LC type fiber connections.
- RLH Industries Slimline fiber optic patch panel, DIN rail mount, LC-LC multimode fiber adapter plate.
- RLH Industries LC-LC duplex fiber patch cable, multimode, 2M/6.56 ft.
- Allen-Bradley panel mounted common alarm pilot light, red, 30-mm, push-to-test.
- Floyd Bell panel mounted alarm horn.
- Allen-Bradley panel mounted, alarm silence/reset pushbutton.
- Pepperl + Fuchs intrinsically safe relays/barriers as required.
- CITEL DLA-24D3 plug in analog input surge protectors as required.
- Phoenix Contact 2794903, varistor type discrete input surge protectors as required.
- Finder Wet floor Sensor (WFS) relays with SPDT relay output as required.
- All required relays, wire, terminal blocks and misc. control panel hardware.
- Completely factory programmed, assembled, wired and tested for proper functionality.
- UL698A Listed and Labeled.

Qty.1- Dewatering Building Remote I/O Panel (RIO-2) inclusive of the following:

- 72” H x 36” W x 18” D, NEMA 12 painted steel, free standing enclosure with door activated LED light, lockable handle and three-point latching system.
- Input Power: 120VAC, 1-phase, 60 Hz.
- CITEL 120VAC, 1-phase, 60 Hz. incoming power surge protector.
- Allen-Bradley branch circuit rated 120VAC control power circuit breakers as required.
- CyberPower 1000VA Uninterruptible Power Supply (UPS), 120VAC.
- Allen-Bradley, AC fuse disconnects with neon blown fuse indicator, qty. as required.
- Allen-Bradley, DC fuse disconnects with LED blown fuse indicator, qty. as required.
- PULS 240-watt, 24VDC power supply with input and output fuses as required.
- Allen-Bradley CompactLogix 5069-L320ER Programmable Logic Controller (PLC) with all required 5069 series I/O modules and accessories.
- Panel mounted Allen-Bradley PanelView Plus 7, 15” color touch screen Operator Interface Unit (OIU).
- Antaira LMX-2004G-SFP, twenty (20) port managed Ethernet switch, (16) TX ports, (4) SFP slots.
- Antaira SFP-M-T, 1GB fiber SFP transceivers as required, multimode, LC type fiber connections.
- RLH Industries Slimline fiber optic patch panel, DIN rail mount, LC-LC multimode fiber adapter plate.
- RLH Industries LC-LC duplex fiber patch cable, multimode, 2M/6.56 ft.
- Allen-Bradley panel mounted common alarm pilot light, red, 30-mm, push-to-test.
- Floyd Bell panel mounted alarm horn.
- Allen-Bradley panel mounted, alarm silence/reset pushbutton.
- All required relays, wire, terminal blocks and misc. control panel hardware.
- Completely factory programmed, assembled, wired and tested for proper functionality.
- UL508A Listed and Labeled.

Qty.1- Headworks Building Remote I/O Panel (RIO-3) inclusive of the following:

- 72” H x 36” W x 18” D, NEMA 12 painted steel, free standing enclosure with door activated LED light, lockable handle and three-point latching system.
- Input Power: 120VAC, 1-phase, 60 Hz.
- CITEL 120VAC, 1-phase, 60 Hz. incoming power surge protector.
- Allen-Bradley branch circuit rated 120VAC control power circuit breakers as required.
- CyberPower 1000VA Uninterruptible Power Supply (UPS), 120VAC.
- Allen-Bradley, AC fuse disconnects with neon blown fuse indicator, qty. as required.
- Allen-Bradley, DC fuse disconnects with LED blown fuse indicator, qty. as required.
- PULS 240-watt, 24VDC power supply with input and output fuses as required.
- Allen-Bradley CompactLogix 5069-L320ER Programmable Logic Controller (PLC) with all required 5069 series I/O modules and accessories.
- Panel mounted Allen-Bradley PanelView Plus 7, 15” color touch screen Operator Interface Unit (OIU).
- Antaira LMX-2004G-SFP, twenty (20) port managed Ethernet switch, (16) TX ports, (4) SFP slots.
- Antaira SFP-M-T, 1GB fiber SFP transceivers as required, multimode, LC type fiber connections.
- RLH Industries Slimline fiber optic patch panel, DIN rail mount, LC-LC multimode fiber adapter plate.
- RLH Industries LC-LC duplex fiber patch cable, multimode, 2M/6.56 ft.
- Allen-Bradley panel mounted common alarm pilot light, red, 30-mm, push-to-test.
- Floyd Bell panel mounted alarm horn.
- Allen-Bradley panel mounted, alarm silence/reset pushbutton.
- Pepperl + Fuchs intrinsically safe relays/barriers as required.
- CITEL DLA-24D3 plug in analog input surge protectors as required.
- Finder Wet floor Sensor (WFS) relays with SPDT relay output as required.
- All required relays, wire, terminal blocks and misc. control panel hardware.
- Completely factory programmed, assembled, wired and tested for proper functionality.
- UL698A Listed and Labeled.

Qty.1- ATAD Building Remote I/O Panel (RIO-4) inclusive of the following:

- 72” H x 36” W x 18” D, NEMA 12 painted steel, free standing enclosure with door activated LED light, lockable handle and three-point latching system.
- Input Power: 120VAC, 1-phase, 60 Hz.
- CITEL 120VAC, 1-phase, 60 Hz. incoming power surge protector.
- Allen-Bradley branch circuit rated 120VAC control power circuit breakers as required.
- CyberPower 1000VA Uninterruptible Power Supply (UPS), 120VAC.
- Allen-Bradley, AC fuse disconnects with neon blown fuse indicator, qty. as required.
- Allen-Bradley, DC fuse disconnects with LED blown fuse indicator, qty. as required.
- PULS 240-watt, 24VDC power supply with input and output fuses as required.
- Allen-Bradley CompactLogix 5069-L320ER Programmable Logic Controller (PLC) with all required 5069 series I/O modules and accessories.
- Panel mounted Allen-Bradley PanelView Plus 7, 15” color touch screen Operator Interface Unit (OIU).
- Antaira LMX-2004G-SFP, twenty (20) port managed Ethernet switch, (16) TX ports, (4) SFP slots.
- Antaira SFP-M-T, 1GB fiber SFP transceivers as required, multimode, LC type fiber connections.
- RLH Industries Slimline fiber optic patch panel, DIN rail mount, LC-LC multimode fiber adapter plate.
- RLH Industries LC-LC duplex fiber patch cable, multimode, 2M/6.56 ft.
- Allen-Bradley panel mounted common alarm pilot light, red, 30-mm, push-to-test.
- Floyd Bell panel mounted alarm horn.
- Allen-Bradley panel mounted, alarm silence/reset pushbutton.
- All required relays, wire, terminal blocks and misc. control panel hardware.
- Completely factory programmed, assembled, wired and tested for proper functionality.
- UL508A Listed and Labeled.

Qty.1- Microscreen Building Remote I/O Panel (RIO-5) inclusive of the following:

- 72” H x 36” W x 18” D, NEMA 12 painted steel, free standing enclosure with door activated LED light, lockable handle and three-point latching system.
- Input Power: 120VAC, 1-phase, 60 Hz.
- CITEL 120VAC, 1-phase, 60 Hz. incoming power surge protector.
- Allen-Bradley branch circuit rated 120VAC control power circuit breakers as required.
- CyberPower 1000VA Uninterruptible Power Supply (UPS), 120VAC.
- Allen-Bradley, AC fuse disconnects with neon blown fuse indicator, qty. as required.
- Allen-Bradley, DC fuse disconnects with LED blown fuse indicator, qty. as required.
- PULS 240-watt, 24VDC power supply with input and output fuses as required.
- Allen-Bradley CompactLogix 5069-L320ER Programmable Logic Controller (PLC) with all required 5069 series I/O modules and accessories.
- Panel mounted Allen-Bradley PanelView Plus 7, 15” color touch screen Operator Interface Unit (OIU).
- Antaira LMX-2004G-SFP, twenty (20) port managed Ethernet switch, (16) TX ports, (4) SFP slots.
- Antaira SFP-M-T, 1GB fiber SFP transceivers as required, multimode, LC type fiber connections.
- RLH Industries Slimline fiber optic patch panel, DIN rail mount, LC-LC multimode fiber adapter plate.
- RLH Industries LC-LC duplex fiber patch cable, multimode, 2M/6.56 ft.
- Allen-Bradley panel mounted common alarm pilot light, red, 30-mm, push-to-test.
- Floyd Bell panel mounted alarm horn.
- Allen-Bradley panel mounted, alarm silence/reset pushbutton.
- Pepperl + Fuchs intrinsically safe relays/barriers as required.
- CITEL DLA-24D3 plug in analog input surge protectors as required.
- Phoenix Contact 2794903, varistor type discrete input surge protectors as required.
- All required relays, wire, terminal blocks and misc. control panel hardware.
- Completely factory programmed, assembled, wired and tested for proper functionality.
- UL698A Listed and Labeled.

Qty.1- Sodium Hypochlorite Fill Station Control Panel (NACLO-FS-CP) inclusive of the following:

- Hoffman 20” H x 16” W x 12” D, NEMA 4X fiberglass wall mount enclosure.
- Input Power: 120VAC, 1-phase, 60 Hz.
- CITEL 120VAC, single-phase power surge protector.
- Allen-Bradley branch circuit rated 120VAC control power circuit breaker.
- (1) RedLion door mounted tank level indicators.
- (1) Allen-Bradley door mounted 90% full pilot lights, amber.
- (1) Allen-Bradley door mounted high level alarm pilot lights, red.
- Allen-Bradley door mounted, alarm silence/reset pushbutton.
- Federal Signal door mounted alarm horn.
- 125-watt thermostatically controlled; fan driven panel heater.
- All required relays, wire, cabling, terminal blocks and misc. control panel hardware.
- Completely factory assembled, wired and tested for proper functionality.
- UL508A listed and labeled.

Qty.1- Sodium Hydroxide Fill Station Control Panel (NAOH-FS-CP) inclusive of the following:

- Hoffman 20” H x 16” W x 12” D, NEMA 4X fiberglass wall mount enclosure.
- Input Power: 120VAC, 1-phase, 60 Hz.
- CITEL 120VAC, single-phase power surge protector.
- Allen-Bradley branch circuit rated 120VAC control power circuit breaker.
- (2) RedLion door mounted tank level indicators.
- (2) Allen-Bradley door mounted 90% full pilot lights, amber.
- (2) Allen-Bradley door mounted high level alarm pilot lights, red.

- Allen-Bradley door mounted, alarm silence/reset pushbutton.
- Federal Signal door mounted alarm horn.
- 125-watt thermostatically controlled; fan driven panel heater.
- All required relays, wire, cabling, terminal blocks and misc. control panel hardware.
- Completely factory assembled, wired and tested for proper functionality.
- UL508A listed and labeled.

Qty.1- Disinfection Building SCADA Panel Hardware Modifications inclusive of the following:

AquaLogics will provide and install the following components withing the existing Disinfection System SCADA Panel. Existing spare I/O points will be used to accommodate the I/O signals as outlined on the I/O Matrix and as required by the project. All hardware will be installed within the existing control panel, wired, programmed and tested for proper functionality.

- (2) Aeration Blower Operator Control Stations inclusive of the following:
  Nameplate, large, white w/black lettering.
  Allen-Bradley panel mounted 22mm Hand-Off-Auto (H-O-A) selector switch.
  Allen-Bradley panel mounted 18mm call, run and fail pilot lights.
  ENM panel mounted elapsed runtime meter, 5-digit.
- All required relays, wire, terminal blocks and misc. control panel hardware.
- Completely programmed, assembled, wired and tested for proper functionality.

<u>SCADA Hardware System and Software (WWTP and Butterhill Water System)</u>

Qty.2 - SCADA Workstations; Dell Precision T5860 Tower Computer Workstation inclusive of the following:

<u>Hardware</u>:

- Intel Xeon 4.2 GHz Six Core Processor.
- 32GB DDR4 Memory.
- Dual 1 TB solid state hard disk drives.
- Six (6) USB 2.0 ports.
- 10BaseT Ethernet adapter.
- USB Keyboard.
- USB optical mouse.
- (2) 27” flat panel monitors with adjustable stands and HDMI cables.

<u>Factory Configured and Installed Software</u>:

- Allen-Bradley 9701M-VWSTNST20 FactoryTalk View SE Standard, 250 display runtime.
- Allen-Bradley 9701M-VWSSPT30 FactoryTalk View SE, Studio for Development.
- XLReporter Reporting Software; XLR-BASIC-P perpetual and XLR-HIST-P Historian perpetual.
- WIN-911(upgrade at no charge as New Windsor has ongoing WIN-911 support).
- Microsoft Windows 11 PRO Operating System.
- Latest version of Microsoft Office Professional.
- Backup Software, latest version.

<u>Accessories</u>:

- Western Digital external USB drive, 1 TB.
- Workstation UPS; CyperPower 1000VA Uninterruptible Power Supply (UPS).
- DELL networkable color laser printer.
- Misc. Network Cabling.

Instrumentation:

Qty.5- VEGAPULS 31 radar level transmitters (15-LT-301, 15-LT-302, 15-LIT-303, 23-LIT-101, 23-LIT-102).

Qty.2- Keller America LevelRat submersible wetwell level transmitters with suspension kits (LT-5, LT-6).

Qty.2- Hach SC4500 Dissolved Oxygen Controller with LDO Dissolved Oxygen sensor, pole mount kit and 100' extension cable and controller UV screen (DOS-1/DOS-AE-1, DOS-2/DOS-AE-2).

Qty.13- SJE Rhombus normally-closed, non-mercury float switches with 30'cable and SS wall mount bracket for Flood Detection Sensors (FDS-200, FDS-201, FDS-400, FDS-401, FDS-500, FDS-501, FDS-502, FDS-503, FDS-700, FDS-701, FDS-800, FDS-801, FDS-802).

Qty.4- SJE Rhombus (2 normally-open, 2 normally-closed) non-mercury float switches with 50'cable and SS wall mount bracket for wetwell high and low level floats (FL-3, FL-4, FL-5, FL-6).

Qty.1- Combination Smoke and Carbon Monoxide Detector; Gentex model GN-503FF smoke/carbon monoxide detector (Headworks Electrical Room).

Qty.4- PULSAR/Greyline OCF 6.1 open channel flow meters with PZ15 sensor, 100' transducer cable and SS transducer mounting bracket (FIT-01, FIT-02, FIT-03, FIT-04).

Qty.4 - Pfannenberg PYRA Series Red/Green stack lights with sound. Chemical Leak Detection Alarming Lights and Horns (H/S-504, H/S-505, H/S-506, H/S-507).

Qty.12- Room Temperature Transmitters, non-classified area, Omega model EWS-TX with EWS-MB wall plate and gasket (TEMP-200, TEMP-400, TEMP-401, TEMP-500, TEMP-501, TEMP-502, TEMP-503, TEMP-504, TEMP-700, TEMP-701, TEMP-900, TEMP-901)

Qty.2- Room Temperature Transmitters, classified area, DWYER Instruments model TTE-104-W-LCD with wall mount bracket (TEMP-201, TEMP-202).

Qty.4- Wet Floor Sensors, FINDER model 072.11 floor mount sensor (WFS-200, WFS-500, WFS-900, WFS-901).

Spare Parts:

Qty.1- Lot Spare Parts as follows:

- One (1) PLC CPU of each type.
- One (1) PLC Power Supply of each type.
- One (1) PLC I/O module of each type.
- One (1) 24VDC panel power supply of each type.
- One (1) intrinsically safe barrier of each type.
- Two (2) surge protectors of each type.
- Five (5) fuses of each type.
- Five (5) pilot light bulbs of each type
- One (1) Horn/Strobe.

SCADA Integration and Programming Services:

Qty.1- Lot engineering services to provide integration of AquaLogics and OEM supplied control panels and instrumentation in conformance with project specifications. All required PLC, HMI and SCADA system programming, including screen development, data logging, historical logging, local and remote

alarming, operational reporting and remote access/control features will be fully configured, programmed and tested to ensure a fully operational control system in which meets all project requirements.

Field Services:

Qty.2- Day onsite service to provide installation instruction to the contractor.

Qty.25- Days onsite service to provide equipment start-up, final calibration, system programming and testing.

Qty.3- Days onsite service to provide operator training.

Documentation:

Qty.1- Electronic Submittal in PDF format, delivered via email.

Qty.1- Electronic Operations & Maintenance Manual in PDF format, USB thumb drive.

Qty.3- Hard Copy Operations & Maintenance Manuals, three-ring binders.

Pricing:

Control Building Main Control Panel (MCP)…….……	$51,270.00
MBR Building Remote I/O Panel (RIO-1)…..……	$88,428.00
Dewatering Building Remote I/O Panel (RIO-2)……	$47,976.00
Headworks Building Remote I/O Panel (RIO-3)……	$59,275.00
ATAD Building Remote I/O Panel (RIO-4)……	$48,640.00
Microscreen Building Remote I/O Panel (RIO-5)……	$61,923.00
Sodium Hypochlorite Fill Station Control Panel (NACLO-FS-CP)……	$7,428.00
Sodium Hydroxide Fill Station Control Panel (NAOH-FS-CP)……..	$9,460.00
Disinfection Building SCADA Panel Hardware Modifications……..	$19,878.00
SCADA System Hardware and Software……	$40,472.00
Instrumentation……	$51,242.00
Spare Parts……	$24,279.00
SCADA Integration and Programming Services……	$84,000.00
Field Services……	$51,800.00
Total Net Price……..…	**$646,071.00**

Taxes:

Sales or Use Taxes are not included.

Warranty:

All proposed equipment is warranted against system failure due to defects in workmanship and/or materials for a period of twelve (12) months from equipment start-up, not to exceed eighteen (18) months from date of shipment from our factory. This warranty does not cover failures due to human negligence and/or acts of nature.

Not Included:

Equipment installation, field wiring, conduits or piping unless specifically stated above.

Freight:

Prepaid and included to New Windsor, NY.

Delivery:

Submittals: 6-8 weeks after receipt of order.
Equipment: 16-20 weeks after drawing approvals.

Terms:

95% Net 30 days, 5% retainage allowed, not to exceed 90 days from shipment.

Thank you for the opportunity to provide you with our quotation. Should you have any questions or desire additional information please don't hesitate to contact our office.

Best regards,
AquaLogics Systems, Inc.

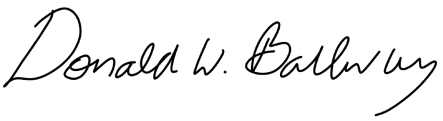

Donald W. Ballway

EXHIBIT I

Assigned Procurement Contract – Veolia Water Technologies & Solutions
(F.K.A. Suez WTS USA, Inc.)

CAESARS LANE WASTEWATER TREATMENT FACILITY
MBR SYSTEM PRE-SELECTION

FOR

TOWN OF NEW WINDSOR
ORANGE COUNTY, NEW YORK

PREPARED FOR:
Town of New Windsor
555 Union Avenue
New Windsor, NY 12553

PREPARED BY:
MHE Engineering, D.P.C.
33 Airport Center Dr. Suite 202
New Windsor, NY 12553

NOTE: ANY UNAUTHORIZED ALTERATION OR ADDITION TO THIS DOCUMENT IS A VIOLATION OF SECTION 7209(2) OF THE NEW YORK STATE EDUCATION LAW.

DATE: 13 May 2022
JOB #: 18-732

TABLE OF CONTENTS

PAGE

ADVERTISEMENT FOR BIDS

INSTRUCTIONS FOR BIDDERS

BID FORM

Article 1 – BUYER AND BIDDER....1
Article 2 – BASIS OF BID....1
Article 3 – TIME OF COMPLETION....5
Article 4 – ATTACHMENTS TO THIS BID....5
Article 5 – BIDDER'S ACKNOWLEDGEMENTS....5
Article 6 – BIDDER'S REPRESENTATIONS AND CERTIFICATIONS....5
Appendix 1 - BID WORKSHEETS....8

BID BOND (DAMAGES FORM)

AGREEMENT

Article 1 – PROCUREMENT CONTRACT....1
Article 2 – PROCUREMENT CONTRACT TIMES....2
Article 3 – PROCUREMENT CONTRACT PRICE....3
Article 4 – PAYMENT PROCEDURES....3
Article 5 – ASSIGNMENT OF PROCUREMENT CONTRACT....4
Article 6 – PROCUREMENT CONTRACT DOCUMENTS....7
Article 7 – SELLER'S REPRESENTATIONS AND CERTIFICATIONS....8
Article 8 – CONFIDENTIALITY....9
Article 9 – MUTUAL WAIVER....10
Exhibit A – ASSIGNMENT
Exhibit B – SURETY'S CONSENT TO ASSIGNMENT

GENERAL CONDITIONS

Article 1 – DEFINITIONS AND TERMINOLOGY....1
Article 2 – PRELIMINARY MATTERS....5
Article 3 – CONTRACT DOCUMENTS: INTENT AND AMENDING....7

GENERAL CONDITIONS CONTD. **PAGE**

Article 4 – COMMENCEMENT AND SCHEDULE 9
Article 5 – BONDS AND INSURANCE 11
Article 6 – LICENSES AND FEES 13
Article 7 – SELLER'S RESPONSIBILITIES 14
Article 8 – SHIPPING AND DELIVERY 19
Article 9 – BUYER'S RIGHTS 20
Article 10 – ENGINEER'S STATUS 24
Article 11 – CHANGES 25
Article 12 – CLAIMS, DISPUTES, AND DISPUTE RESOLUTION 27
Article 13 – PAYMENT 29
Article 14 – CANCELLATION, SUSPENSION AND TERMINATION 33
Article 15 – MISCELLANEOUS 34

SUPPLEMENTARY CONDITIONS

TECHNICAL SPECIFICATIONS

017823 OPERATION AND MAINTENANCE DATA 017823-1
013300 SUBMITTAL PROCEDURES 013300-1
014000 QUALITY REQUIREMENTS 014000-1
016000 PRODUCT REQUIREMENTS 016000-1
017516 SYSTEM START-UP 017516-1
017823 OPERATION AND MAINTENANCE DATA 017823-1
017900 DEMONSTRATION AND TRAINING 017900-1
019113 GENERAL COMMISSIONING REQUIREMENTS 019113-1
455000 MEMBRANE FILTRATION SYSTEM 455000-1

ATTACHMENTS

OVERALL CONCEPT PLAN SK-1
EXISTING HYDRAULIC GRADE HG-1
PROPOSED PROCESS SCHEMATIC PRO-1
HYDRAULIC PROFILE HP-101
ADDENDUM NO. 1 DATED 29 JUNE 2022 1
ADDENDUM NO. 2 DATED 8 JULY 2022 1

PERFORMANCE BOND
PAYMENT BOND
SUEZ PROPOSAL DATED 20 JULY 2022

ADVERTISEMENT FOR BIDS

Town of New Windsor
Orange County, New York
Caesar's Lane WWTP MBR System Pre-Selection

General Notice

The **Town of New Windsor** (Owner) is requesting Bids for the supply of the following equipment:

Caesars Lane WWTP MBR System Pre-Selection

Bids for the Project will be received at the **Town of New Windsor Town Hall** located at **555 Union Avenue, New Windsor, NY 12553** until **19 July 2022** at **2:00 PM** local time. At that time the Bids received will be **publicly** opened and read.

The Project includes the following Work:

A. The Work includes furnishing materials and equipment, supply, start-up, commissioning, performance testing, and operator training of the proposed membrane bioreactor (MBR) system.

B. One contract will be awarded for this Work by the Town. The awarded contract will be assumed by a General Contractor as part of the Caesars Lane WWTP Plant Expansion Project which will be bid at a later date.

C. Installation of membrane system equipment will be by a General Contractor as part of the Caesars Lane WWTP Plant Expansion Project.

Obtaining the Bidding Documents

Bidding Documents will be provided electronically, becoming available 13 May 2022 via a shared file link by submitting an email to the Town's Engineer/Issuing Office MHE Engineering, D.P.C., **dsorvillo@mhepc.com or jzajac@mhepc.com.** Prospective Bidders are required to register as a plan holder, by requesting these documents in electronic format through the issuing office. Those who obtain documents through other sources for the purposes of viewing are not considered plan holders and will be ineligible to bid.

The Issuing Office for the Bidding Documents is:

MHE Engineering, D.P.C.
33 Airport Center Drive, Suite 202
New Windsor, NY 12553
Attn: Jamison Zajac
845-567-3100

Copyright© 2018 National Society of Professional Engineers, American Council of Engineering Companies, and American Society of Civil Engineers. All rights reserved.

Instructions to Bidders.

For all further requirements regarding bid submittal, qualifications, procedures, and contract award, refer to the Instructions to Bidders that are included in the Bidding Documents.

Each bid shall be accompanied by an acceptable form of Bid Guarantee in an amount equal to at least five (5) percent of the amount of the Bid payable to the Town of New Windsor as a guarantee that if the Bid is accepted, the Bidder will, within fifteen (15) days after the award of the Contract, execute the Contract and file acceptable Performance and Labor and Material Payment Bonds and Certificate(s) of Insurance.

OWNERS RIGHTS RESERVED: The Town of New Windsor, hereinafter called the Owner, reserves the right to reject any or all Bids and to waive any informality or technicality in any Bid in the interest of the Owner.

STATEMENT OF NON-COLLUSION: Bidders on Contracts are required to execute a non-collusive bidding affidavit pursuant to Section 103d of the General Municipal Law of the State of New York.

IRAN DIVESTMENT ACT: By submission of this bid, each bidder and each person signing on behalf of any bidder certifies, and in the case of a joint bid, each party thereto certifies as to its own organization, under penalty of perjury, that to the best of its knowledge and belief, each bidder is not on the list created pursuant to paragraph (b) of subdivision 3 of section 165-a of the State Finance Law.

Attention of bidders is particularly called to the requirement as to conditions of employment to be observed and the minimum wage rates to be paid under the Contract (Section 3, Segregated Facilities, Section 109) and Executive Order 11246.

Bidders are also required to comply with the provisions of Section 291-299 of the Executive Law of the State of New York.

No bidder may withdraw their bid within forty-five (45) days after the actual date of the opening thereof.

Subject to the provisions of Article 28, Part III of the New York State Tax Law and the provisions of the Contract Documents, the Owner is exempt from payment of sales and compensating use taxes of the State of New York, and cities and counties, on all materials supplied to the Owner pursuant to this contract.

The Town of New Windsor hereby notifies all bidders that it will affirmatively ensure that in regard to any contract entered into pursuant to this advertisement, minority business enterprises will be afforded full opportunity to submit bids in response to this invitation and will not be discriminated against on the ground of race, gender, color or national origin in consideration of an award.

Copyright© 2018 National Society of Professional Engineers, American Council of Engineering Companies, and American Society of Civil Engineers. All rights reserved.

American Iron and Steel

Section 746 of Title VII of the Consolidated Appropriations Act of 2017 (Division A - Agriculture, Rural Development, Food and Drug Administration, and Related Agencies Appropriations Act, 2017) and subsequent statutes mandating domestic preference applies an American Iron and Steel requirement to this project. All iron and steel products used in this project must be produced in the United States. The term "iron and steel products" means the following products made primarily of iron or steel: lined or unlined pipes and fittings, manhole covers and other municipal castings, hydrants, tanks, flanges, pipe clamps and restraints, valves, structural steel, reinforced precast concrete, and Construction Materials.

The following waivers apply to this Contract:
***De Minimis*,**
Minor Components,
Pig iron and direct reduced iron

This Advertisement is issued by:

Owner: **Town of New Windsor Town Clerk**
By: Kelly Allegra
Title: **Town Clerk**
Date: 13 May 2022

Copyright© 2018 National Society of Professional Engineers, American Council of Engineering Companies, and American Society of Civil Engineers. All rights reserved.

INSTRUCTIONS TO BIDDERS FOR PROCUREMENT CONTRACTS

TABLE OF CONTENTS

Page

Article 1— Defined Terms 1
Article 2— Procurement Bidding Documents 1
Article 3— Qualifications of Bidders 1
Article 4— Site Visit; Pre-Bid Conference 1
Article 5— Interpretations and Addenda 2
Article 6— Bid Security 2
Article 7— Procurement Contract Times 3
Article 8— Liquidated Damages 3
Article 9— Confidentiality of Bid Information 3
Article 10— "Or-Equal" Items 4
Article 11— Preparation of Bid 4
Article 12— Basis of Bid; Comparison of Bids 5
Article 13— Submittal of Bid 5
Article 14— Modification or Withdrawal of Bid 5
Article 15— Opening of Bids 5
Article 16— Bids to Remain Subject to Acceptance 6
Article 17— Evaluation of Bids and Award of Procurement Contract 6
Article 18— Bonds and Insurance 6
Article 19— Signing of Procurement Agreement 6
Article 20— Sales and Use Taxes 7
Article 21— Procurement Contract to be Assigned 7
ARTICLE AA—Procurement Contract to be Assigned 7
ARTICLE BB—Bidder's Acknowledgments 7
ARTICLE CC—Miscellaneous 7

Copyright© 2019 National Society of Professional Engineers, American Council of Engineering Companies, and American Society of Civil Engineers. All rights reserved.

INSTRUCTIONS TO BIDDERS FOR PROCUREMENT CONTRACT

ARTICLE 1—DEFINED TERMS

1.01 Terms used in these Instructions to Bidders will have the meanings indicated in the General Conditions and Supplementary Conditions. Additional terms used in these Instructions to Bidders have the meanings indicated below.

A. *Issuing Office*—The office from which the Procurement Bidding Documents are to be issued.

ARTICLE 2—PROCUREMENT BIDDING DOCUMENTS

2.01 Bidder may obtain complete sets of the Procurement Bidding Documents, in the number and for the deposit sum, if any, stated in the advertisement or invitation to bid, from the Issuing Office. The deposit will be refunded to each document holder of record who returns a complete set of Procurement Bidding Documents in good condition within 30 days after opening of Bids. Bidders must obtain a complete set of the Procurement Contract Documents as listed in the Procurement Agreement.

2.02 Bidder must use a complete set of the Procurement Bidding Documents in preparing the Bid; neither Buyer nor Engineer assumes any responsibility for errors or misinterpretations resulting from the use of incomplete sets of Procurement Bidding Documents.

2.03 Buyer and Engineer make copies of Procurement Bidding Documents available on the above terms only for obtaining Bids for furnishing Goods and Special Services, and do not authorize or confer a license for any other use.

ARTICLE 3—QUALIFICATIONS OF BIDDERS

3.01 Buyer may at any time conduct such investigations as Buyer deems necessary to establish the responsibility, qualifications, and financial ability of Bidder, and after the opening of Bids may require a Bidder to submit documentation of its qualifications, including but not limited to financial data and documentation of previous experience providing goods and services comparable to the specified Goods and Special Services.

3.02 Bidder is to carefully review those portions of the Bid Form requiring Bidder's representations and certifications.

3.03 Bidder shall submit a qualifications statement with the Bid, including financial data and documentation of previous experience providing comparable goods and services, to demonstrate Bidder's qualifications to furnish the specified Goods and Special Services.

ARTICLE 4—SITE VISIT; PRE-BID CONFERENCE

4.01 Buyer recommends that Bidder visit the Point of Destination and the site where the Goods are to be installed and Special Services will be provided, taking into account observable local and site conditions that may affect the delivery, cost, progress, and furnishing of the Goods and Special

Copyright© 2019 National Society of Professional Engineers, American Council of Engineering Companies, and American Society of Civil Engineers. All rights reserved.

Services. Arrangements for such a visit may be made through Engineer. Point of destination is designated as: 145 Caesars Lane, New Windsor, NY 12553.

4.02 A pre-bid conference will not be held for this procurement.

ARTICLE 5—INTERPRETATIONS AND ADDENDA

5.01 All questions about the meaning or intent of the Procurement Bidding Documents are to be submitted to Engineer in writing **via email to jzajac@mhepc.com & dsorvillo@mhepc.com.**

5.02 Interpretations or clarifications considered necessary by Engineer in response to such written questions will be issued by Addenda digitally to all parties recorded as having received the Procurement Bidding Documents. Questions received less than 10 days prior to the date for opening of Bids will not be answered. Only answers in the Addenda will be binding. Oral statements, interpretations, and clarifications may not be relied upon in the preparation of a Bid, and will not be binding or legally effective.

5.03 Addenda may be issued to clarify, correct, or change the Procurement Bidding Documents as deemed advisable by Buyer or Engineer.

ARTICLE 6—BID SECURITY

6.01 A Bid must be accompanied by Bid security made payable to Buyer in an amount of **five (5)** percent of Bidder's maximum Bid price (determined by adding the base bid and all alternates) and in the form of a Bid bond issued by a surety meeting the requirements of Paragraph 5.01 of the General Conditions. Such Bid bond will be issued in the form included in the Procurement Bidding Documents.

6.02 The Bid security of the apparent Successful Bidder will be retained until Buyer (Project Owner) awards the Procurement Contract to such Bidder, and such Bidder has executed the Procurement Contract, furnished the required contract security, and met the other conditions of the Notice of Award, whereupon the Bid security will be released. If the Successful Bidder fails to execute and deliver the Procurement Contract and furnish the required contract security within 15 days after the Notice of Award, Buyer (Project Owner) may consider Bidder to be in default and annul the Notice of Award, and the Bid security of that Bidder will be forfeited, in whole in the case of a penal sum bid bond, and to the extent of Buyer's damages in the case of a damages-form bond. Such forfeiture will be Buyer's exclusive remedy if Bidder defaults.

6.03 The Bid security of other Bidders that Buyer believes to have a reasonable chance of receiving the award may be retained by Buyer until the earlier of 7 days after the Effective Date of the

Copyright© 2019 National Society of Professional Engineers, American Council of Engineering Companies, and American Society of Civil Engineers. All rights reserved.

Procurement Contract or 61 days after the Bid opening, whereupon Bid security furnished by such Bidders will be released.

6.04 Bid security of other Bidders that Buyer believes do not have a reasonable chance of receiving the award will be released within 7 days after the Bid opening.

ARTICLE 7—PROCUREMENT CONTRACT TIMES

7.01 See applicable provisions in the Procurement Agreement.

ARTICLE 8—LIQUIDATED DAMAGES

8.01 Any provisions for liquidated damages, such as those for Seller's failure to attain a specified Milestone such as the delivery of the Goods, are set forth in the Procurement Agreement.

ARTICLE 9—CONFIDENTIALITY OF BID INFORMATION

9.01 Confidential information is information in the Bid, or in documents submitted by Bidder with the Bid or submitted subsequent to the opening of Bids in support of the Bid, that Bidder clearly and prominently labels in writing to be a trade secret, proprietary, or confidential. Bids will be opened and accompanying documents, if any, will be maintained in a manner that endeavors to avoid disclosing confidential information to third parties, to the extent allowed by Laws and Regulations.

9.02 Bidder shall clearly and prominently mark confidential information with the word "CONFIDENTIAL" on each page or sheet or on the cover of bound documents. Place "CONFIDENTIAL" stamps or watermarks so that they do not obscure any of the required information on the document, either in the original or in a way that would obscure any of the required information in a photocopy of the document.

9.03 If Buyer is requested to disclose confidential information, becomes legally compelled to disclose confidential information, or is required by a regulatory body, governing agency, or controlling authority to disclose confidential information, or make any other disclosure that is prohibited or otherwise constrained by these Procurement Bidding Requirements, Buyer will provide Bidder with prompt notice so Bidder may seek a protective order or other appropriate remedy. Bidder will be solely responsible for submitting to the regulatory body, governing agency, or controlling authority any arguments, briefs, memoranda, motions, authorities, or other information in opposition to disclosure.

9.04 Buyer's obligations with respect to confidential information are nullified by the following exceptions:

A. Confidential information becomes a part of the public domain through publication or otherwise, through no fault of the Buyer;

B. Buyer can demonstrate through suitable documentation that the confidential information was already in the Buyer's possession, and not previously marked as confidential, or was otherwise publicly available prior to the date of Bid submittal;

C. The confidential information is subsequently and independently disclosed to the Buyer by a third party who has a lawful right to disclose such information;

Copyright© 2019 National Society of Professional Engineers, American Council of Engineering Companies, and American Society of Civil Engineers. All rights reserved.

D. Buyer concludes in good faith that the information is not confidential, or that disclosure is required or justified; or

E. Buyer is required to disclose the confidential information by court order or by applicable Laws and Regulations.

9.05 Notwithstanding any other provision of the Procurement Bidding Documents, it is stipulated and agreed that by accepting a Bid, Buyer has not and does not waive its legal immunity (if any) from suit or liability.

ARTICLE 10—"OR-EQUAL" ITEMS

10.01 The Procurement Contract, if awarded, will be based on material and equipment specified in the Procurement Bidding Documents without consideration of possible "or-equal" items. Whenever it is specified or described in the Procurement Bidding Documents that an "or-equal" item of material or equipment may be furnished or used by Seller if acceptable to Engineer, application for such acceptance will not be considered by Engineer until after the Effective Date of the Procurement Contact. The procedure for submittal of any such application by Seller and consideration by Engineer is set forth in the General Conditions and may be supplemented in the Procurement Specifications.

10.02 Deleted.

ARTICLE 11—PREPARATION OF BID

11.01 The Bid Form is included with the Procurement Bidding Documents. Additional copies of Procurement Bidding Documents may be obtained from the Issuing Office.

11.02 All blanks on the Bid Form must be completed and the Bid Form must be signed by an individual authorized to act on behalf of the Bidder. Alterations must be initialed by an individual authorized to act on behalf of the Bidder. A Bid price must be indicated for each item in the Bid Form. In the case of optional alternates, the words "No Bid" may be entered.

11.03 Bidder must acknowledge all Addenda by filling in the number and date of each Addendum in the Bid Form and sign where indicated to verify that the Addenda were received. A Bid that does not acknowledge receipt of all Addenda may be considered non-responsive.

11.04 Bidder shall:

A. Sign the Bid Form as indicated in the Bid Form.

B. Include evidence of authority to sign.

C. Provide information on the individual to be contacted for any communications regarding the Bid.

D. Provide evidence of the Bidder's authority and qualification to do business in the locality of the Project, to the extent required, or indicate the ability to obtain such authority and qualification prior to award of the Procurement Contract.

Copyright© 2019 National Society of Professional Engineers, American Council of Engineering Companies, and American Society of Civil Engineers. All rights reserved.

11.05 The responsibilities of each Bidder submitting a Bid are described in the Bidder's representations and certifications set forth in Article 6 of the Bid Form.

ARTICLE 12—BASIS OF BID; COMPARISON OF BIDS

12.01 TYPE OF BID

A. Membrane system equipment shall be an evaluated bid considering, but not limited to capital cost of membrane system equipment and design support services, and 10-year life cycle analysis. Life cycle analysis is based on Bid Worksheets , which outline annual and construction cost of process tanks, cleaning chemical consumption, power costs of pumps and blower operations, annual service contract including remote monitoring and support, and membrane replacement. MBR System Capital Cost Table Bid Worksheets are identified in the Bid Form.

ARTICLE 13—SUBMITTAL OF BID

13.01 Bidder shall refer to the **advertisement** for specific identification of the date, time, and place where Bids are to be submitted.

13.02 Bidder must submit one separate unbound copy of the completed Bid Form, and, if required, the Bid Security and the other documents required to be submitted under the terms of Article 4 of the Bid Form.

13.03 A Bid must be submitted no later than the date and time prescribed and at the place indicated in the advertisement or invitation to bid. Submit the Bid in an envelope plainly marked with the Project title (and, if applicable, the designated portion of the Project for which the Bid is submitted) and the name and address of Bidder. Enclose the Bid security and other documents required to be submitted with the Bid as listed in the Bid Form. If a Bid is sent by mail or other delivery system, the sealed envelope containing the Bid shall be enclosed in a separate package plainly marked on the outside with the notation "BID ENCLOSED."

ARTICLE 14—MODIFICATION OR WITHDRAWAL OF BID

14.01 A Bid may be modified or withdrawn by a document duly signed in the same manner that a Bid must be signed and delivered to the place where Bids are to be submitted prior to the date and time for the opening of Bids.

14.02 If, within 24 hours after Bids are opened, any Bidder files a duly signed written notice with Buyer and promptly thereafter demonstrates to the reasonable satisfaction of Buyer that there was a material and substantial mistake in the preparation of its Bid, that Bidder may withdraw its Bid, and the Bid security will be returned.

ARTICLE 15—OPENING OF BIDS

15.01 Bids will be publicly opened at the time and place indicated in the advertisement or invitation to bid and read aloud, unless obviously non-responsive. An abstract of the amounts of the Base Bids

Copyright© 2019 National Society of Professional Engineers, American Council of Engineering Companies, and American Society of Civil Engineers. All rights reserved.

and Alternate Bids, if any, will be made available to Bidders after Bids have been opened and reviewed by the Buyer.

15.02 Deleted.

ARTICLE 16—BIDS TO REMAIN SUBJECT TO ACCEPTANCE

16.01 All Bids will remain subject to acceptance for the period stated in the Bid Form, but Buyer may, in its sole discretion, release any Bid and return the Bid security prior to the end of this period.

ARTICLE 17—EVALUATION OF BIDS AND AWARD OF PROCUREMENT CONTRACT

17.01 Buyer reserves the right to reject any and all Bids, including without limitation, nonconforming, nonresponsive, unbalanced, or conditional Bids. Buyer also reserves the right to waive all informalities not involving price, time, or changes in the Goods and Special Services.

17.02 Buyer will reject the Bid of any Bidder that Buyer finds, after reasonable inquiry and evaluation, to not be responsible.

17.03 In evaluating Bids, Buyer will consider whether the Bids comply with the prescribed requirements, and such alternates, unit prices, and other data as may be requested in the Bid Form or may be requested from Bidders prior to a Notice of Award.

17.04 Buyer reserves the right to reject any and all bids that do not meet the experience requirements.

17.05 If Buyer awards the Procurement Contract, such award will be to the lowest responsive and responsible proposal as determined by the Buyer to be in its best interest.

ARTICLE 18—BONDS AND INSURANCE

18.01 Article 5 of the General Conditions and Article 5 of the Supplementary Conditions set forth Buyer's requirements as to performance and payment bonds and insurance. When the Successful Bidder delivers the signed Procurement Agreement to Buyer, it must be accompanied by such bonds and acceptable evidence of insurance.

ARTICLE 19—SIGNING OF PROCUREMENT AGREEMENT

19.01 When Buyer issues a Notice of Award to the Successful Bidder, it will be accompanied by the unsigned counterparts of the Procurement Agreement along with the other Procurement Contract Documents identified in the Procurement Agreement. Within 15 days thereafter, Successful Bidder must execute and deliver the required number of counterparts of the Procurement Agreement and any bonds and insurance documentation required to be delivered by the Procurement Contract Documents to Buyer. Within 10 days thereafter, Buyer will deliver one fully executed counterpart of the Procurement Agreement to Successful Bidder, together

Copyright© 2019 National Society of Professional Engineers, American Council of Engineering Companies, and American Society of Civil Engineers. All rights reserved.

with printed and electronic copies of the Procurement Contract Documents as stated in Paragraph 2.02 of the General Conditions.

ARTICLE 20—SALES AND USE TAXES

20.01 Buyer is exempt from **New York** State sales and use taxes on materials and equipment to be incorporated in the Project (Exemption No. **14-6002338**). Exempt taxes must not be included in the Bid. Refer to P-800, Paragraph SC-7.05 for additional information.

ARTICLE 21—PROCUREMENT CONTRACT TO BE ASSIGNED

21.01 Bidder's attention is directed to the provisions of Article 5 of the Procurement Agreement which provide for the assignment of the Procurement Contract to a construction contractor designated by the Buyer to construct the **Caesars Lane WWTP Expansion Project.** Successful Bidder (Seller) will be required to perform the Procurement Contract after it has been assigned to the construction contractor (Contractor Assignee) in accordance with the provisions in the Procurement Contract. Timing of the assignment is addressed in the Procurement Agreement. Forms documenting the assignment of the Procurement Contract and for the agreement of the Seller's surety to such assignment are included as attachments to the Procurement Agreement.

ARTICLE AA—PROCUREMENT CONTRACT TO BE ASSIGNED

DELETED.

ARTICLE BB—BIDDER'S ACKNOWLEDGMENTS

DELETED.

ARTICLE CC—MISCELLANEOUS

DELETED.

Copyright© 2019 National Society of Professional Engineers, American Council of Engineering Companies, and American Society of Civil Engineers. All rights reserved.

6 Bidding Documents – Bid Form, Bid Worksheets, and Bid Bond

1 Bid Form

2 Bid Worksheets

3 Bid Bond

BID FORM FOR PROCUREMENT CONTRACT

The terms used in this Bid with initial capital letters have the meanings stated in the Instructions to Bidders, the General Conditions, and the Supplementary Conditions.

ARTICLE 1—BUYER AND BIDDER

1.01 This Bid for Caesars Lane WWTP MBR System Pre-Selection is submitted to:

Town of New Windsor

555 Union Avenue

New Windsor, NY 12553

1.02 The undersigned Bidder proposes and agrees, if this Bid is accepted, to enter into a Procurement Contract with Buyer in the form included in the Procurement Bidding Documents, and to furnish the Goods and Special Services as specified or indicated in the Procurement Bidding Documents, for the prices and within the times indicated in this Bid, and in accordance with the other terms and conditions of the Procurement Bidding Documents.

ARTICLE 2—BASIS OF BID

2.01 *Base Bid Price*

A. Bidder shall complete the attached Bid Tables and Worksheets that contain the required formulas and submit with their bid. Bids received without a completed Worksheets shall be deemed unresponsive. Bids received with Worksheets completed incorrectly (i.e., provided formulas not used, miscalculated, or doesn't match submittal information) shall be deemed unresponsive.

B. Bidder acknowledges that the MBR System Capital Cost line item below represents the actual price for the equipment to be paid by the Buyer and will reflect the amount to be used in the Agreement.

C. Bidder acknowledges that any discrepancy between the attached Worksheets and the Bid Summary Table below shall be resolved by using the lower cost/value when comparing bid costs.

D. Bidder acknowledges that the formulas and definitions provided in the attached Worksheets were developed to provide a fair estimate of the 10-year cost value to the Buyer, as a result of selecting the Bidder's equipment.

E. Bidder acknowledges that the other line items in the table below are considered in addition to the MBR System Capital Costs for purposes of bid comparison; providing the highest probability of determining the most cost-effective bid for the buyer over the next 10 years for this project.

Copyright© 2019 National Society of Professional Engineers, American Council of Engineering Companies, and American Society of Civil Engineers. All rights reserved.

F. Bidder hereby agrees to perform all Work as described in the Specifications and as shown on the Drawings of these Contract Documents, complete for the following Total Bid Cost price indicated in the following Bid Summary Table:

(Note: Total Bid Cost includes Items 1, 2, 4, and 5)

BID SUMMARY TABLE

Item No.	Description	Extended Total Price
1.	Capital MBR System Costs (See Table in Section 2.01.G)	$ 3,826,000
2.	Annual Service Cost (Table A-12, Line A) x 7.4	$ Included in the Capital MBR Cost
3.	Annualized Maintenance Cost (Table B)	$ 451,339
4.	Construction Costs (Table C-4, Line C.12)	$ 5,322,402
5.	Present Worth O&M (Line 3 x 7.4)	$ 3,339,908
	TOTAL BID COST (Sum of all rows)	**$ 12,488,310**

TOTAL BID COST TWELVE MILLION AND FOUR HUNDRED EIGHTY EIGHT THOUSAND AND THREE HUNDRED TEN

(in words)

G. The MBR System Capital Cost Schedule summarizes the corresponding Unit Price and Extended Total Price for each Cost Item. Bidder acknowledges that the Extended Total Price shall be full compensation for all Base Bid Work complete, as described for each scheduled Bid Item.

MBR SYSTEM CAPITAL COST SCHEDULE

Item No.	Description	Unit	Estimated Quantity	Unit Price	Extended Total Price
1.	Bonds and Insurance	LS	1	$ 65,821	$ 65,821
2.	Submittals	LS	1	$ 167,437	$ 167,437
3.	Membrane Units and MBR Integral Interconnecting	LS	1	$ 1,996,209	$ 1,996,209
4.	Pumps, Mixers, Blowers, Diffusers, Valves etc.	LS	1	$ 1,043,983	$ 1,043,983
5.	Chemical Cleaning Systems	LS	1	$ 73,127	$ 73,127
6.	Instrumentation and Controls	LS	1	$ 233,167	$ 233,167
7.	Start-up, Commissioning and Training	LS	1	$ 85,365	$ 85,356
8.	Miscellaneous	LS	1	$ 160,900	$ 160,900
				TOTAL MBR SYSTEM CAPITAL COST	**$ 3,826,000**

TOTAL MBR SYSTEM CAPITAL COST THREE MILLION AND EIGHT HUNDRED TWENTY SIX THOUSAND

(in words)

H. Estimated annual operation and maintenance costs are based on the Average Daily Flow and wastewater characteristics listed in the Section 455000 Membrane Filtration System. Costs should be stated for continuous steady state operation at ADF. Assumed diurnal curve modeling will not be accepted.

I. Bidder shall attach all tables and worksheets as part of evaluated bid submittal package.

J. Bidder shall attach Bid Submittals required in Section 455000 Membrane Filtration System.

Copyright© 2019 National Society of Professional Engineers, American Council of Engineering Companies, and American Society of Civil Engineers. All rights reserved.

2.02 *Major Equipment and Systems Suppliers*

A. In connection with major items of equipment to be furnished and installed in this Project, Bidder expressly agrees to the following provisions:

1. That the Total Base Bid Price stated above includes the furnishing of major equipment, products, and systems furnished by the Supplier which Bidder has selected from those suppliers listed in table "Schedule of Proposed Major Equipment and Systems Suppliers" completed as part of this Bid Form; and Bidder has circled the name of the selected Supplier in the "Schedule of Proposed Equipment Suppliers" form in this Section.

B. The "Schedule of Proposed Major Equipment and Systems Suppliers" in this Bid Form shall be binding in terms of the selected equipment, products, systems, and suppliers to be provided by the Bidder under the Total Base Bid Price.

2.03 Substitutions for Major Equipment and Systems

A. Substitutions offered by Bidder shall be governed by the requirements of the General Conditions; and Product Requirements of these Specifications. Bidder expressly agrees to the following provisions:

1. Where proposed substitutions for major equipment and system items listed in the "Schedule of Proposed Major Equipment and Systems Suppliers" form are to be considered, they must be designated by Bidder in the spaces provided on the Schedule Form.

2. Contract Price will be determined on the basis of the lowest Total Base Bid Price or adjusted Total Base Bid Price. Substitutions for Major Equipment and Systems proposed by Bidder and deemed by Buyer to be acceptable shall be considered only after Contract Award.

The remainder of this page was left blank intentionally.

Copyright© 2019 National Society of Professional Engineers, American Council of Engineering Companies, and American Society of Civil Engineers. All rights reserved.

2.04 *Schedule of Proposed Major Equipment and Systems Suppliers*

SCHEDULE OF PROPOSED MAJOR EQUIPMENT AND SYSTEM SUPPLIERS

A	B	C	D	E	F	G
Item	Spec. Section No.	Description	Prequalified "Major Equipment Manufacturers"	Identify "Supplier or Manufacturer" Included in Bidder's Base Bid Price by circling one of the following(1)	Proposed Seller Substitution (optional)(2)	Lump Sum Price Adjustment Add/(Deduct)
a.	455000	Submersible Pumps	a. Flygt b. ABS/Sulzer c. Wilo d. KSB	a. Flygt b. ABS/Sulzer c. Wilo d. KSB		$_____
b.	455000	End suction centrifugal pump	a. Flowserve b. ABS/Sulzer c. Pentair/Fairbanks d. KSB	a. Flowserve b. ABS/Sulzer c. Pentair/Fairbanks d. KSB		$_____
c.	455000	Rotary Lobe Pumps	a. Vogelsang b. Boerger	a. Vogelsang b. Boerger		$_____
d.	455000	Rotary Lobe Blowers	a. Gardner Denver b. Kaeser c. Aerzen	a. Gardner Denver b. Kaeser c. Aerzen		$_____
e.	455000	Submersible Mixers	a. Flygt b. ABS/Sulzer c. Wilo d. KSB	a. Flygt b. ABS/Sulzer c. Wilo d. KSB		$_____
f.	455000	Membrane Diffusers	a. EDI b. Sanitaire c. SSI	a. EDI b. Sanitaire c. SSI		$_____

Notes:

(1) Instructions for listing supplier or manufacturer included in Bidder's Base Bid Price under Column E:

a. Circle name of one supplier or manufacturer for each item listed under Column A to be included in the Bidder's Base Bid Price.

b. Proposal shall be considered irregular and subject to rejection if Bidder:

1) Fails to list (by circling) an approved Supplier or Manufacturer listed under Column E;

Copyright© 2019 National Society of Professional Engineers, American Council of Engineering Companies, and American Society of Civil Engineers. All rights reserved.

ARTICLE 3—TIME OF COMPLETION

3.01 Bidder agrees that the furnishing of Goods and Special Services will conform to the schedule of Procurement Contract Times set forth in Article 2 of the Procurement Agreement.

3.02 Bidder accepts the provisions of the Procurement Agreement as to liquidated damages.

ARTICLE 4—ATTACHMENTS TO THIS BID

4.01 The following documents are attached to and made a condition of this Bid:

A. Required Bid security in the form prescribed in the Instructions to Bidders.

B. Evidence of authority to do business in the state of the Project; or a written covenant to obtain such authority within the time for acceptance of Bids.

C. Evaluated bid submittal in accordance with Specification 455000.

D. Required Bidder Qualification Statement with supporting data.

ARTICLE 5—BIDDER'S ACKNOWLEDGMENTS

5.01 Bidder accepts all terms and conditions of the Instructions to Bidders. This Bid will remain subject to acceptance for 45 days after the Bid opening, or for such longer period that Bidder may agree to in writing upon request of Buyer.

5.02 Bidder has examined and carefully studied the Procurement Bidding Documents, the related data identified in the Procurement Bidding Documents, and the following Addenda, receipt of which is hereby acknowledged:

Addendum No.	Addendum Date
1	June 29, 2022
2	July 08, 2022

ARTICLE 6—BIDDER'S REPRESENTATIONS AND CERTIFICATIONS

6.01 *Bidder's Representations*

A. In submitting this Bid, Bidder represents that:

1. Bidder has examined and carefully studied the Procurement Contract Documents.

2. If required by the Instructions to Bidders to visit the Point of Destination and the site where the Goods are to be installed or Special Services will be provided, or if, in Bidder's judgment, any observable local or site conditions may affect the delivery, cost, progress, or furnishing of the Goods and Special Services, then Bidder has visited the Point of Destination and site where the Goods are to be installed or Special Services will be provided (as applicable) and become familiar with and is satisfied as to the observable local and site conditions that may affect delivery, cost, progress, and furnishing of the Goods and Special Services.

Copyright© 2019 National Society of Professional Engineers, American Council of Engineering Companies, and American Society of Civil Engineers. All rights reserved.

3. Bidder is familiar with and is satisfied as to all Laws and Regulations that may affect the cost, progress, and performance of Seller's obligations under the Procurement Contract.

4. Bidder has carefully studied, considered, and correlated the information known to Bidder with respect to the effect of such information on the cost, progress, and performance of Seller's obligations under the Procurement Contract.

5. Bidder has given Engineer written notice of all conflicts, errors, ambiguities, or discrepancies that Bidder has discovered in the Procurement Contract Documents, and the written resolution (if any) thereof by Engineer is acceptable to Bidder.

6. The Procurement Contract Documents are generally sufficient to indicate and convey understanding of all terms and conditions for performance of Seller's obligations under the Procurement Contract.

7. The submission of a Bid will constitute an incontrovertible representation by Bidder that Bidder has complied with every requirement of the Bidding Requirements, that without exception the Bid (including all Bid prices) is premised upon furnishing the Goods and Special Services as required by the Procurement Contract Documents.

6.02 *Bidder's Certifications*

A. Bidder certifies that:

1. This Bid is genuine and not made in the interest of or on behalf of any undisclosed individual or entity and is not submitted in conformity with any collusive agreement or rules of any group, association, organization, or corporation;

2. Bidder has not directly or indirectly induced or solicited any other Bidder to submit a false or sham Bid;

3. Bidder has not solicited or induced any individual or entity to refrain from bidding; and

4. Bidder has not engaged in corrupt, fraudulent, collusive, or coercive practices in competing for the Procurement Contract. For the purposes of this Paragraph 6.02.A.4:

a. "corrupt practice" means the offering, giving, receiving, or soliciting of anything of value likely to influence the action of a public official in the bidding process;

b. "fraudulent practice" means an intentional misrepresentation of facts made (a) to influence the bidding process to the detriment of Buyer, (b) to establish bid prices at artificial non-competitive levels, or (c) to deprive Buyer of the benefits of free and open competition;

c. "collusive practice" means a scheme or arrangement between two or more Bidders, with or without the knowledge of Buyer, a purpose of which is to establish bid prices at artificial, non-competitive levels; and

d. "coercive practice" means harming or threatening to harm, directly or indirectly, persons or their property to influence their participation in the bidding process.

Copyright© 2019 National Society of Professional Engineers, American Council of Engineering Companies, and American Society of Civil Engineers. All rights reserved.

This Bid is offered by:

Bidder:

SUEZ WTS SYSTEMS USA, INC.

(typed or printed name of organization)

By: 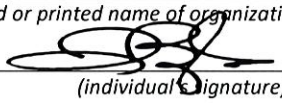

(individual's signature)

Date: JULY 12, 2022

(date signed)

Name: DAVID BINGHAM

(typed or printed)

Title: COMMERCIAL DIRECTOR

(typed or printed)

(If Bidder is a corporation, a partnership, or a joint venture, attach evidence of authority to sign.)

Attest: SEE ATTACHED

(individual's signature)

Title:

(typed or printed)

Address for giving notices:

3239 Dundas Street West, Oakville, ON L6M 4B2

Designated Representative:

Name: GRAHAM BEST

(typed or printed)

Title: REGIONAL MANAGER

(typed or printed)

Address:

3239 DUNDAS ST. W., OAKVILLE, ON L6M 4B2

Phone: 905 330 0881

Email: graham.best@suez.com

License No.: N/A

Classification: N/A

Limitation: N/A

Copyright© 2019 National Society of Professional Engineers, American Council of Engineering Companies, and American Society of Civil Engineers. All rights reserved.

Caesars Lane WWTP Expansion Phase
MBR Pre-Selection

ADDENDUM NO. 2

ACKNOWLEDGEMENT OF RECEIPT OF ALL ADDENDUMS LISTED BELOW:

ADDENDUM NO. 1 – 29 JUNE 2022 

ADDENDUM NO. 2 – 8 JULY 2022 

SUBMIT THIS SHEET WITH YOUR BID

(End of Addendum No. 2)

MHE Engineering, D.P.C.
33 Airport Center Drive, Suite 202
New Windsor, NY 12553

DELEGATION OF SIGNATURE AUTHORITY BY OFFICER

BY THIS DELEGATION OF SIGNATURE AUTHORITY, I, as Vice President - Engineered Systems, of SUEZ WTS USA, Inc.; SUEZ WTS International USA, Inc.; SUEZ WTS Analytical Instruments, Inc.; SUEZ WTS Systems USA, Inc.; SUEZ WTS Services USA, Inc.; SUEZ WTS Solutions USA, Inc.; and Zenon Environmental Corporation (hereinafter collectively referred to as "SUEZ WTS") with the delegable authority granted by the Board of Directors to sign contracts in the name of SUEZ WTS as set forth in the Annual Actions Resolutions of SUEZ WTS, hereby revoke any previously granted delegations issued by me and delegate to the below named individuals, effective January 1, 2021:

Anthony AMENDOLA
Michael BENSON
David BINGHAM
Greg BRICKETT
Joseph BRUCE
Michael CONE
Thomas COSGRAVE
Pedro DACRUZ
Edana ESSA
Andrea FORSTER
Branden GARRETT
William GILL
Richard GRAY
James HARWOOD
Miloud HASSENE
William HEINS
Ryan HESS
Paul HOWLAND
Michael HRIBLJAN
Christopher JANSEN
Paul JOSEPHSON
Diane KUN
Debora LOUNSBERRY
Chris LOW
Melanie MAILLY-DEMONT
Jason MONGRAIN
Dewey PINNOCK
Louise RAYMOND
David ROSSER
Eric SAVAGE
Dhaval SHAH
Stephanie SNYDER
Michael SYLSTRA
Eric TATE
Joseph TIETJENS
Frank TROCINO
Nishith VORA
Graeme YOUNG

A. the authority to exercise my approval authority with regard to commercial operations under the Annual Actions Board Resolutions and SUEZ Water Technologies & Solutions Global Operating Policy, subject to the prior approvals obtained via the SUEZ Delegation of Authority Policy;

B. the authority to sign on behalf of SUEZ WTS those certain agreements within my authority as Vice President, subject to the prior approvals obtained via the SUEZ Delegation of Authority Policy; and

C. the authority to sell goods and/or services to SUEZ WTS customers on standard terms and conditions.

Such delegation includes but is not limited to the delegated authority to sign all contractual instruments, certificates, documents, acknowledgments, consents, and other agreements as may be necessary or convenient in order to carry out the intent and purpose of the foregoing authority.

EXCEPT THAT THIS DELEGATION DOES NOT INCLUDE THE AUTHORITY TO:

1. Modify corporate insurance policies
2. Transfer intellectual property to a customer
3. Enter into joint ventures or partnerships
4. Provide advance payments to customers
5. Provide commissions to agents other than approved distributors
6. Provide deferred revenue
7. Buy back inventory
8. Engage in a Tiering arrangement

Nothing in this Delegation of Signature Authority alters any applicable Corporation review and approval requirements for the above-listed documents, including but not limited the SUEZ Water Technologies & Solutions Global Operating Policy. The Delegation of Signature Authority conferred hereby shall NOT be further delegable.

This Delegation of Signature Authority is valid until 31 December 2021.

IN WITNESS, WHEREOF, I, as Vice President of SUEZ WTS, have caused my signature to be hereunto placed the day and year first above written.

Name: Kevin Cassidy
Title: Vice President - Engineered Systems

Acknowledged by Legal Dept.:

Kelley A. Tarricone

Date: 12/31/2020

Acknowledged by Delegee:

Date: 12/31/2020

BID WORKSHEETS

Bid Analysis
Overview

MBR System proposals shall be evaluated based upon the base bid schedule, present work cost and as noted below:

The evaluation shall consider both financial and non-financial criteria. In addition to the quantitative evaluation of the MBR System Cost and Total Present Worth, the evaluator(s) shall allow careful consideration for non-quantitative evaluation parameters of System Flexibility, Warranty, and Reliability and Technical Support Capabilities. If the Town of New Windsor awards the procurement contract, such award will be to the responsible bidder submitting the bid that best suits the Town's needs.

The following general notes for the basis for the quantitative analyses:

A. Costs and operational requirements are to be based on the Scopes of Supply, process treatment requirements, and hydraulic design requirements as stated in this Specification. If the bidder requires additional information, such as water chemistry, bidder shall request such information a minimum of 30 days prior to bid opening.

B. Membrane replacement shall be set equal to the Warranty Period.

C. Please note that information regarding the Membrane Service Conditions and expected maintenance requirements shall be set equal to the minimum replacement frequency as stated in related O&M materials. For example, if the replacement frequency in the O&M manual that suggests wear items such as seals, retaining rubbers or diffusers shall be replaced every 3-7 years, the System Supplier shall assume a replacement of every 3 years in the Proposal.

D. Annualized operations and maintenance costs are based on Average Daily Flow conditions.

E. Calculation of the present worth of annual costs shall use a Present Worth Factor of 7.4, equal to 10 years at a 6% discount rate.

F. The average electrical Energy costs are assumed to be $0.20/kWh.

G. The calculation of present worth is based on a 10-year plant life cycle for operating and maintenance.

Copyright© 2019 National Society of Professional Engineers, American Council of Engineering Companies, and American Society of Civil Engineers. All rights reserved.

Note: SUEZ's base design is based on a full siphon. With a siphon design, there will be no permeate pumps, and the overall plant power requirement will be reduced. So this table is not applicable.

Table A-1: Permeate Pumps Power Consumption - Siphon Design

Line ID	Parameter	Unit	Value
A	Total Number of Pumps Provided	#	0
B	Total Number of Duty Pumps	#	0
C	Design Capacity of Pumps	gpm @ TDH	n/a
D	Operating Capacity at ADF (total for all operating pumps)	gpm	n/a
E	Average Operating Transmembrane Pressure (average value of the minimum and maximum values provided by the Supplier.)	ft	n/a
F	Static Discharge Head	ft	-2
G	Suction Piping HL	ft	n/a
H	Total Head (E+F+G, ignore discharge piping HL)	ft	n/a
I	Hours of Operation (at ADF)	hr/day	n/a
J	Pump Efficiency	%	n/a
K	Motor Efficiency	%	n/a
L	VFD Efficiency	%	95
M	Operating Horsepower (all operating pumps) $= \frac{D(Q,gpm) * H\ (TDH,ft)}{3960 * (\frac{J}{100} * \frac{K}{100} * \frac{L}{100})}$	HP	n/a
N	Total Power Consumption $= M\ (hp) * 0.746$	kW	n/a
M	Annual Power Consumption $= N * I * 365\ days/yr$	kWhr/yr	0

Copyright© 2019 National Society of Professional Engineers, American Council of Engineering Companies, and American Society of Civil Engineers. All rights reserved.

Note: This page is for SUEZ's alternative design with permeate pumps

Table A-1: Permeate Pumps Power Consumption - Alternative Permeate Pump Design

Line ID	Parameter	Unit	Value
A	Total Number of Pumps Provided	#	4
B	Total Number of Duty Pumps	#	3 (at ADF)
C	Design Capacity of Pumps	gpm @ TDH	3,355 @ 10 psig
D	Operating Capacity at ADF (total for all operating pumps)	gpm	3,788
E	Average Operating Transmembrane Pressure (average value of the minimum and maximum values provided by the Supplier.)	ft	Min at ADF = 1.2 Max at ADF = 6.8 Average at ADF = 2.4
F	Static Discharge Head	ft	-2
G	Suction Piping HL	ft	0.1
H	Total Head (E+F+G, ignore discharge piping HL)	ft	0.5
I	Hours of Operation (at ADF)	hr/day	22.0
J	Pump Efficiency	%	42.8
K	Motor Efficiency	%	90.1
L	VFD Efficiency	%	95
M	Operating Horsepower (all operating pumps) $= \frac{D(Q, gpm) * H\ (TDH, ft)}{3960 * (\frac{J}{100} * \frac{K}{100} * \frac{L}{100})}$	HP	1.31
N	Total Power Consumption $= M\ (hp) * 0.746$	kW	0.97
M	Annual Power Consumption $= N * I * 365\ days/yr$	kWhr/yr	7,820

Copyright© 2019 National Society of Professional Engineers, American Council of Engineering Companies, and American Society of Civil Engineers. All rights reserved.

Table A-2: Blower Power Consumption (complete for each type provided in all basins) - Membrane Blower

Line ID	Parameter	Unit	Value
A	Total Number of Blowers Provided	#	5
B	Total Number of Duty Blowers	#	2 (at ADF)
C	Design Capacity of Blowers, each	SCFM @ psig	1,467@5.5
D	Operating Capacity	SCFM	1,011
E	Min Intake Air Temperature	°F	15
F	Site Relative Humidity	%	85
G	Site Elevation	ft	25
H	Water Level	psig	4.45
I	Discharge Pipe Losses	psig	0.2
J	Operating Discharge Pressure	psig	4.65
K	Hours of Operation (at ADF)	hr/day	24
L	Blower Efficiency at Operating Point	%	68%
M	Motor Efficiency	%	94.5%
N	VFD Efficiency	%	97%
O	Operating Horsepower (all operating blowers)	HP	61.76
P	Total Power Consumption $= M\ (hp) * 0.746$	kW	46.08
Q	Annual Power Consumption $= N * K * 365\ days/yr$ P x K x 365	kWhr/yr	403,625

Note: Values are provided based on 3 membrane trains in operation at ADF with Leap-Low aeration (2 blowers in operation at 69% of the blower capacity)

Copyright© 2019 National Society of Professional Engineers, American Council of Engineering Companies, and American Society of Civil Engineers. All rights reserved.

Table A-2: Blower Power Consumption (complete for each type provided in all basins) - Process Blower

Line ID	Parameter	Unit	Value
A	Total Number of Blowers Provided	#	3
B	Total Number of Duty Blowers	#	1 (at ADF)
C	Design Capacity of Blowers, each	SCFM @ psig	1,950@9.0
D	Operating Capacity	SCFM	1,950
E	Min Intake Air Temperature	°F	15
F	Site Relative Humidity	%	85
G	Site Elevation	ft	25
H	Water Level (including the fine bubble diffuser pressure losses)	psig	7.81
I	Discharge Pipe Losses	psig	0.63
J	Operating Discharge Pressure	psig	8.44
K	Hours of Operation (at ADF)	hr/day	24
L	Blower Efficiency at Operating Point	%	67%
M	Motor Efficiency	%	95.2%
N	VFD Efficiency	%	97%
O	Operating Horsepower (all operating blowers)	HP	106.84
P	Total Power Consumption $= M\ (hp) * 0.746$	kW	79.70
Q	Annual Power Consumption P x K x 365 $= N * I * 365\ days/yr$	kWhr/yr	698,199

Note: Values are provided based on one blower in operation at 100% of the blower capacity at ADF condition.

Copyright© 2019 National Society of Professional Engineers, American Council of Engineering Companies, and American Society of Civil Engineers. All rights reserved.

Table A-3: RAS Pumps Power Consumption

Line ID	Parameter	Unit	Value
A	Total Number of Pumps Provided	#	4
B	Total Number of Duty Pumps	#	3 (at ADF)
C	Design Capacity of Pumps	gpm @ TDH	5,729@20
D	Operating Capacity at ADF (total for all operating pumps)	gpm	13,889
E	Static Head	ft	1
F	Piping Losses	ft	4
G	Not used		
H	Total Head (F+G)	ft	5
I	Hours of Operation (at ADF)	hr/day	24
J	Pump Efficiency	%	80.1
K	Motor Efficiency	%	78
L	VFD Efficiency	%	95
M	Operating Horsepower (all operating pumps) $= \frac{D(Q, gpm) * H\ (TDH, ft)}{3960 * (\frac{J}{100} * \frac{K}{100} * \frac{L}{100})}$	HP	29.55
N	Total Power Consumption $= M\ (hp) * 0.746$	kW	22.04
O	Annual Power Consumption $= N * I * 365\ days/yr$	kWhr/yr	193,080

Copyright© 2019 National Society of Professional Engineers, American Council of Engineering Companies, and American Society of Civil Engineers. All rights reserved.

Table A-4: Feed Forward Pumps Power Consumption (Not applicable)

Line ID	Parameter	Unit	Value
A	Total Number of Pumps Provided	#	
B	Total Number of Duty Pumps	#	
C	Design Capacity of Pumps	gpm @ TDH	
D	Operating Capacity at ADF (total for all operating pumps)	gpm	
E	Static Head	ft	
F	Piping	ft	4
G	Not used		
H	Total Head (E+F)	ft	
I	Hours of Operation (at ADF)	hr/day	
J	Pump Efficiency	%	
K	Motor Efficiency	%	
L	VFD Efficiency	%	95
M	Operating Horsepower (all operating pumps) $= \frac{D(Q, gpm) * H\ (TDH, ft)}{3960 * (\frac{J}{100} * \frac{K}{100} * \frac{L}{100})}$	HP	
N	Total Power Consumption $= M\ (hp) * 0.746$	kW	
M	Annual Power Consumption $= N * I * 365\ days/yr$	kWhr/yr	

Copyright© 2019 National Society of Professional Engineers, American Council of Engineering Companies, and American Society of Civil Engineers. All rights reserved.

Table A-5: Sodium Hypochlorite Cleaning Consumption

Line ID	Description of Cleaning Event	Frequency (#/yr)	Volume (gal/each)	Total Volume (gal/yr)
A	Sodium Hypochlorite Maintenance Clean	156 (per plant)	12.4	1,940
B	Sodium Hypochlorite Other Clean (Recoery Cleaning)	6 (per plant)	144.8	869
C	Sodium Hypochlorite Other Clean (n/a)	n/a	n/a	n/a
D	Total Usage (12.5% solution)	N/A	N/A	2,809
E	Annual Cost @ $1.80/gallon	$ 3,491 (MCs)	$ 1,564 (RCs)	$ 5,055

Note: Membrane sodium hypochlorite cleaning is based on ADF condition: 1 MC/train per week, and 2 RC per year per train.

Table A-6: Citric Acid Cleaning Consumption

Line ID	Description of Cleaning Event	Frequency (#/yr)	Volume (gal/each)	Total Volume (gal/yr)
A	Citric Acid Maintenance Clean	0	n/a	0
B	Citric Acid Other (Recovery Cleaning)	6 (per plant)	70.1	421
C	Citric Acid Other (n/a)	n/a	n/a	n/a
D	Total Usage (50% solution)	N/A	N/A	421
E	Annual Cost @ $1.90/gallon	$ 0	$ 800	$ 800

Note: Membrane citric acid cleaning is based on ADF condition: 2 RC per year per train and no MC is required.

Copyright© 2019 National Society of Professional Engineers, American Council of Engineering Companies, and American Society of Civil Engineers. All rights reserved.

Table A-7: Chemical #3 Consumption - Not Applicable

Line ID	Description of Cleaning Event	Frequency (#/yr)	Volume (gal/each)	Total Volume (gal/yr)
	Name of Chemical 3_____			
	CAS# Chemical 3_____			
A	Chemical 3 Use (_____)			
B	Chemical 3 Other Use (_____)			
C	Chemical 3 Other Use (_____)			
D	Total Usage	N/A	N/A	
E	Annual Cost @ _$_____/gallon (provide quote)			

A-8: Membrane Basin

Line ID	Parameter	Unit	Value
A	Number of Membrane Reactors	ea	4
B	Membrane Reactor sidewall area (each)	SF	988
C	Total Membrane Reactor sidewall area (A*B)	SF	3,952

Note: A common train wall is shared by two membrane trains. The common wall area has only been included once in the calculation.

Copyright© 2019 National Society of Professional Engineers, American Council of Engineering Companies, and American Society of Civil Engineers. All rights reserved.

Table A-9: Membrane Replacement

Line ID	Parameter	Unit	Value
Supplier shall guarantee that Membrane Unit replacement cost adjusted from the Bid Date to the replacement purchase order date based on the US Department of Labor, Bureau of Labor and Statistics, Producer Price Index commodity data based on Metals and Metal Products WPU10 (60%) and Plastic Products WPU072 (40%) up to a period equal to the warranty period.			
	Trains 1 to 4		
A	Total Quantity of Membrane Units (Trains 1 and 2)	ea	1,408
B	Guaranteed Replacement Membrane Unit Cost	$	1,600
C	Membrane Replacement Interval (Supplier to specify based on 5 reference installations)	years	Membrane Life 14.5
D	List 5 reference installations and years in service until first membrane replacement		
D1	Reference1: Broad Run WRF, Ashburn, VA - 10 MGD Commissioned Mar 2008	14.33 yrs in service	14.33
D2	Reference2: Oxford WWTP, London, ON - 3.6 MGD Commissioned Oct 2008	13.75 yrs in service	13.75
D3	Reference3: Corona WWTP, Corona, CA - 1 MGD Commissioned Dec 2001	20.5 yrs in service	15.83
D4	Reference4: Carnation WWTP, Carnation, WA - 1 MGD Commissioned Apr 2008	14.3 yrs in service	14.33
D5	Reference5: Rio Vista , Rio Vista, CA - 1 MGD Commissioned July 2006	16 yrs in service	14.17
E	Membrane Replacement Cost (A*B/C)	$/yr	155,366

Copyright© 2019 National Society of Professional Engineers, American Council of Engineering Companies, and American Society of Civil Engineers. All rights reserved.

Table A-10: Membrane Specifications

Line ID	Parameter	Units	Value
A	Material (e.g., PVDF, silica carbide, etc.)	-	PVDF
B	Type (hollow fiber, flat sheet, flat plate, ceramic)	-	Hollow fiber
C	Nominal pore size	microns	0.04
D	Membrane unit wetted feed-side surface area	SF	530
E	Number of Membrane Units per MBR Train or Bioreactor Tank	#	352
F	Minimum operating TMP during warranty period	psi	1.0
G	Maximum operating TMP during warranty period	psi	7.0
H	Net Flux at ADF at design temperature*	gfd	6.7
I	Net Flux at ADF (with one membrane unit out of service, at design temperature)	gfd	8.9
J	Net Flux at MMDF at design temperature	gfd	10.7
K	Net Flux at MMDF (with one membrane unit out of service, at design temperature)	gfd	14.3
L	Net Flux at PHF at design temperature	gfd	22.1
M	Net Flux at PHF (with one membrane unit out of service, at design temperature)	gfd	n/a
N	*List 5 reference installations and installation's design net flux at ADF and temperature. Refer to Section 455000, Para 2.1.B.6.e		
N-1a	Reference1 Name: _ Broad Run WRF. VA _ design temperature 12 _°C	gfd	12.8
N-1b	Reference1: adjusted to Caesar's Lane design temperature 10 °C	gfd	12.1
N-2a	Reference2 Name: _ Fallsburg, NY _ design temperature 7 _°C	gfd	7.9
N-2b	Reference2: adjusted to Caesar's Lane design temperature 10 °C	gfd	8.6
N-3a	Reference3 Name: _ Brush Creek WRF, PA _ design temperature 11 _°C	gfd	8.8
N-3b	Reference3: adjusted to Caesar's Lane design temperature 10 °C	gfd	8.6
N-4a	Reference4 Name: _ Beaver Creek, TN _ design temperature 9 _°C	gfd	9.7
N-4b	Reference4, adjusted to Caesar's Lane design temperature 10 °C	gfd	10.0
N-5a	Reference5 Name: _ Traverse City, MI _ design temperature 10 _°C	gfd	9.7
N-5b	Reference5, adjusted to Caesar's Lane design temperature 10 °C	gfd	9.7

Copyright© 2019 National Society of Professional Engineers, American Council of Engineering Companies, and American Society of Civil Engineers. All rights reserved.

Table A-11: Membrane Specifications (cont'd)

Line ID	Parameter	Units	Value
O	Membrane Tank - width	ft	8
P	Membrane Tank - length	ft	40
Q	Minimum recommended operating water level	ft	9.0
R	Maximum recommended operating water level	ft	10.7
S	MBR MLSS	mg/L	10,625
T	RAS Rate (at ADF)	MGD	20.0
U	RAS Rate (at MMDF)	MGD	32.0
V	WAS Rate (at ADF)	MGD	0.03
W	Air scour flow rate per MBR tank at ADF	SCFM	674
X	Air scour flow rate per MBR tank at MMDF	SCFM	674
Y	Sodium hypochlorite: minimum maintenance cleaning interval	days	3.5
Z	Sodium hypochlorite: minimum recovery cleaning interval	days	183
AA	Citric acid: minimum maintenance cleaning interval	days	n/a
AB	Citric acid: minimum recovery cleaning interval	days	183
AC	Tank liner or coating required?	yes/no	Not required
	If yes, describe.		n/a
AD	Tank isolated any time during cleaning?	yes/no	Yes
AE	Tank drained any time as part of cleaning?	yes/no	No (for MC) Yes (for RC)

Copyright© 2019 National Society of Professional Engineers, American Council of Engineering Companies, and American Society of Civil Engineers. All rights reserved.

Table A-12: Annual Service Contract

Line ID	Parameter	Unit	Value
Supplier shall guarantee that Annual Service Contract Cost shall not increase at a rate greater than the Consumer Price Index (CPI) +1% per year for the warranty period specified.			
A	Guaranteed annual cost of remote monitoring and membrane performance, quarterly performance reports, and 24/7 continuous telephone support.	$/yr	Included in the MBR Capital Cost
B	Years	year	Warranty Period
C	Acknowledge above guarantee	Yes/no	Yes

Copyright© 2019 National Society of Professional Engineers, American Council of Engineering Companies, and American Society of Civil Engineers. All rights reserved.

Table A-13: Power Consumption Guarantee

Line ID	Parameter	Unit	Value
Supplier shall guarantee that Annual Power Usage associated with supplied MBR System will not exceed the supplier-determined limit listed in Row J below for the duration of the warranty period. Rows A-I are provided as summary information, but do not necessarily have to match the Guaranteed Annual Power listed in Row J.			
A	Permeate Pump Power (Table A-1, Row M)	kwhr/yr	n/a
B	Blower Power (Table A-2, Row Q) (Membrane + Process)	kwhr/yr	1,101,824
C	RAS Pump Power (Table A-3, Row ~~N~~ O)	kwhr/yr	193,080
D	Feed Forward Pump Power (Table A-4, Row M)	kwhr/yr	n/a
E	Miscellaneous Power (mixers, control panels, etc.)	kwhr/yr	135,692
F	Additional Power Consumption (supplier-specified safety factor)	kwhr/yr	20,000
G	Total Annual Power (Row A + B + C + D+ E + F)	kwhr/yr	1,450,597
H	ADF (5 MGD x 365 days/yr = 1825 MG/yr)	MG/yr	1825
I	Annual Power Consumption per MG (Row G / Row H)	kwhr/MG	795
J	Guaranteed Annual Power (kwhr per MG for annual average flow range 5.0 to 8.0 MGD)	kwhr/MG	795

Copyright© 2019 National Society of Professional Engineers, American Council of Engineering Companies, and American Society of Civil Engineers. All rights reserved.

Table B – Annual Operations and Maintenance

Line ID	Parameter	Factor	Value
B.1	Annual Power Cost (Table A-13.G)	X $0.20	$ 290,119
B.2	Annual Chemical Cost (Table A-5, A-6, A-7)		$ 5,855
B.3	Membrane Replacement Cost (Table A-9.E)		$ 155,366
Total Annual Operations and Maintenance Cost			$ 451,339

Rest of Page Intentionally Left Blank.

Copyright© 2019 National Society of Professional Engineers, American Council of Engineering Companies, and American Society of Civil Engineers. All rights reserved.

Tank and Building Cost Calculations

Bidders Notes

A. PROCESS BASIN COSTS

The construction costs of equalization and biological basins are based on the total liquid volume required for the proposed MBR System's hydraulic balancing and biological processes. For the purposes of comparison, a unit cost of $4 per gallon of liquid volume will be used, which includes excavation, backfill, and installed concrete costs.

Process basin square footage shall take the following into account:

1. Minimum Anoxic HRT is 1 hour.

2. For design purposes it is assumed that MBR MLSS inventory shall contribute to biological process requirements. Membrane Tank volume shall not be considered when determining SRT requirements unless otherwise requested by the MBR System Supplier

B. MBR BASIN COSTS

The construction costs of MBR basins are based on the total liquid volume required for the proposed MBR System's membrane units. For the purposes of comparison, a unit cost of $4 per gallon of liquid volume will be used, which includes excavation, backfill, and installed concrete costs.

C. MEMBRANE TREATMENT BUILDING COSTS

The construction cost for the new, 1-story membrane treatment building is based on the required footprint, in square feet, for the proposed system pumps, blowers, bulk chemical storage and feed systems, and instrumentation, MCC, and control panels. The total footprint shall include adequate space for equipment access and maintenance. The MBR System Supplier shall provide a breakdown of the space needed, listing area requirements by subsystem. For purposes of comparison, a unit cost of $500 per square foot will be used for building construction.

The evaluators reserve the right to compare each MBR System Supplier's recommended building footprint and may adjust the proposed value or request additional information if it does not appear reasonable.

Space allowance shall take the following into account:

1. A minimum of 3ft clearance around mechanical equipment & electrical

2. Permeate Collection System

3. Supplemental Aeration System

4. Membrane Zone Aeration System

5. Internal Recycle System

6. Integration and Controls System

7. Chemical Dosing System

Copyright© 2019 National Society of Professional Engineers, American Council of Engineering Companies, and American Society of Civil Engineers. All rights reserved.

a. Including storage and containment for a minimum of 1-mo. supply.

b. Incompatible chemicals (as defined by the International Fire Code) must be stored in separate, dedicated containment. Include all necessary containment areas to meet code

c. Chemical containment sized for 150% of the container/tank volume with a 1 foot wall height

8. Adequate height for lifting any equipment for maintenance activities

Table C-1: Construction Costs – Aerobic Volumes

Item	Parameter	Value	Unit	Notes
C.1	Aerobic Volumes	700,000	gal	Provide layout with dimensions.
C.2	Aerobic HRT	2.1	Hr	
C.3	Aerobic Construction Cost	2,800,000	$	C.1 x $4.00/gal

Table C-2: Construction Costs – Anoxic Volumes

Item	Parameter	Value	Unit	Notes
C.4	Anoxic Volumes	330,000	gal	Provide layout with dimensions.
C.5	Anoxic HRT	1.0	Hr	Min. 1.0 hr HRT
C.6	Anoxic Construction Cost	1,320,000	$	C.4 x $4.00/gal

Table C-3: Construction Costs – Membrane Basin

Item	Parameter	Value	Unit	Notes
C.7	Total Membrane Basin Volume	124,476	gal	Total basin volume, not displaced volume. Provide layout with dimensions
C.8	MBR Basin HRT	0.37	hr	
C.9	Membrane Zone Tank Cost	497,902	$	C.7 x $4.00/gal

Table C-4: Construction Costs – Treatment Building

Item	Parameter	Value	Unit	Notes
C.10	Treatment Building Plan Area	1,409	ft2	Provide layout with dimensions.
C.11	Building Cost	704,500	$	= C.10 x $500/ft2

Table C-5 Construction Costs – Tank

Item	Parameter	Value	Unit	Notes
C.12	Tank Cost	4,617,902	$	= C.3 + C.6 + C.9

Table C-6 – TOTAL CONSTRUCTION COSTS

Item	Parameter	Value	Unit	Notes
C.13	Total Construction Costs	5,322,402	$	= C.11 + C.12

Copyright© 2019 National Society of Professional Engineers, American Council of Engineering Companies, and American Society of Civil Engineers. All rights reserved.

Experience and Qualifications

The intent of this section is to establish the qualifications of the Supplier to provide adequate support before, during and after commissioning at the System level. To establish stability, each bidder shall provide an organization chart for each of the last five years including the names of the MBR (or Membrane) Manager, General Manager and President of the company and parent company if applicable. The bidder shall also provide the resumes of applicable lead operations staff.

The prospective Supplier shall submit the following information:

A. Identify the year that the MBR Equipment Manufacturer first began manufacturing MBR equipment for the treatment of municipal wastewater

B. Furnish a list of North American MBR Equipment installations for the treatment of municipal wastewater. The list shall be organized into three sections, including installations of less than 1 MGD, installations ranging in capacity from 1 to 5 MGD, and installations of 5 MGD or greater. The following information shall be provided with each listing:

   1. Owner and Location
   2. Peak Hydraulic Rated Capacity in MGD
   3. Annual Average Rated Capacity in MGD
   4. Biological Nitrogen Removal (yes or no)
   5. Type of WAS Thickening Equipment, if any
   6. Type of Dewatering Equipment, if any
   7. Identify System by Model or Type
   8. First Year of Operation (or identify as under construction)
   9. Reference Contact Name, Title, and Phone Number
   10. Installation Contractor Contact Name, Title, and Phone Number

C. Complete the MBR questionnaire, below, for a minimum of three operating plants in North America of larger than 1 MGD average capacity and with at least 12 consecutive months of operation. If the manufacturer has fewer than three MBR installations of this capacity or larger in North America, installations outside North America may be included.

D. Furnish a list of worldwide MBR Equipment installations, 1.0 MGD or greater, for the treatment of municipal wastewater separate from the North American installations. The list shall be organized in two sections: installations ranging from 1 to 5 MGD in capacity and installations of 5 MGD and greater. Provide the same information as requested for North American installations with each listing.

E. The supplier shall have at least three (3) operational installations in New York State, or if not, at least three (3) operational installations within states participating in Ten States Standards.

F. Identify which of the North American utilize the manufacturer's same model/type anticipated for the Caesars Lane WWTP.

Copyright© 2019 National Society of Professional Engineers, American Council of Engineering Companies, and American Society of Civil Engineers. All rights reserved.

Reference Operating Plants – Facility Information	
Item	**Parameter**
Facility Name:	Broad Run WRF
Location (Address, City, State):	44865 Loudoun Water Way Ashburn, VA 20147
Contact Person:	Michael R. Rumke, Superintendent
Telephone:	(703) 717-1859
Email:	mrumke@loudounwater.org

Reference Operating Plants – Flow Information		
Condition	**Design**	**Actual (Average over Last Year)**
Average Annual Daily Flow (MGD)	5.0/10.0	9.06
Maximum Month Average Daily Flow (MGD)	5.5/11.0	9.66
Peak Hourly Flow (MGD)	9.4/18.8	11.9

Note: Phase 1 (2008)/Phase 2 (2010)

Reference Project Personnel			
Condition	**Years with Company**	**Assigned to this Project (Yes/No)**	**Name**
Project Manager	14	No	Robin Puskas
Piping Designer	8/26	No	Adam Dunn/Jeff Penny
Integrator (Programmer)	8	No	Samia Sanai
Startup Technician	8	No	Adam Dunn
Warranty Support	21	Yes	Matt Stapleford

Reference Operating Plants – Influent Conditions (Primary Effluent)		
Parameter	**Design**	**Actual (Average over Last Year)**
BOD5 (mg/l)	168	-
TSS (mg/l)	108	107
NH3-N (mg/l)	26	45.6
COD (mg/l)		359
TKN (mg/l)	39	54.2
Minimum Temperature (deg C)	12	12
Oils and Grease (FOG) (mg/l)	<150	

Reference Operating Plants – Effluent Conditions		
Parameter	**Design**	**Actual (Average over Last Year)**
BOD5 (mg/l)	5.0	4.64 (COD)
NH3-N (mg/l)	1.0	0.012
Total Nitrogen (mg/l as N)	4	3.55
Turbidity Before Disinfection (NTU)	<0.5 NTU	< 0.5 NTU

Copyright© 2019 National Society of Professional Engineers, American Council of Engineering Companies, and American Society of Civil Engineers. All rights reserved.

Reference Operating Plants – MBR Conditions		
Parameter	**Design**	**Actual (Average over Last Year)**
MLSS (mg/l)	8,000 (Bioreactor)	9,838 (Bioreactor)
SRT (days)	12.0	12-14
AAF Flux (gfd)	12.77 (15.3)	11.07
MMF Flux (gfd)	15.5 (16.9)	11.81
PDF Flux (gfd)	24.0 (28.8)	12.15

Note: Flux in brackets is N-2 net flux.

Reference Operating Plants – Other Process Conditions	
Condition	**Facility Information**
Is denitrification required at this facility (y/n)	Yes
If yes, what is the total anoxic volume at this facility? (US gal)	2,094,000 (1,578,000) Volume in brackets is with Swing Zone in Aerobic Mode)
What is the total volume of the aeration zones at this facility? (US gal)	2,886,000 (3,402,000)
Does the total volume of the aeration zones include the MBR zone volume? (y/n)	No
If no, what is the total MBR zone volume? (US gal)	355,500 gal

Reference Operating Plants – Cleaning Conditions			
	Removed for Cleaning	**Clean In Place**	**Both**
Standard Membrane Cleaning Procedure(s) (select one and fill in clean information)		X	

Reference Operating Plants – Removed for Clean Information						
Process	**Is Process Used?**		**Number of Workers Required for Process**	**How often is Process Performed (Times per Year)**	**Average Time per Cassette (hours)**	**Percent Solution (by weight)**
	Yes	**No**				
Manual Cleaning						
Hose Down						
Manual Debris Removal						
Manual Scrubbing						
Separate Chemical Solution Soak						
Sodium Hypochlorite						
Citric Acid						
Other?						
Other?						
Other Types of Cleaning						
List						

Copyright© 2019 National Society of Professional Engineers, American Council of Engineering Companies, and American Society of Civil Engineers. All rights reserved.

Reference Operating Plants – Clean In Place Information						
Process	Is Process Used? Yes	Is Process Used? No	Number of Workers Required for Process	How often is Process Performed (Times per Year)	Average Time per Cassette (hours)	Percent Solution (by weight)
In-Situ Chemical Solution Soak in Tank - Maintenance Cleaning						
Sodium Hypochlorite	X		N/A	52	0.83	0.02
Citric Acid		X				
Sodium Hydroxide		X				
Membrane Relax	X					
Other?						
Tank Drain, Chemical Solution Soak in Tank - Recovery Cleaning						
Sodium Hypochlorite	X			2	6-8	0.1
Citric Acid	X		N/A	2	6-8	0.2
Sodium Hydroxide		X				
Backpulse	X		N/A			
Extended Chlorine Backpulse		X				
Other Types of Cleaning						
List						

Note: Maintenance cleaning is done on a per train basis. Average time per cassette (hours) is stated as total maintenance clean duration per train in hours.

Copyright© 2019 National Society of Professional Engineers, American Council of Engineering Companies, and American Society of Civil Engineers. All rights reserved.

Reference Operating Plants – Facility Information	
Item	**Parameter**
Facility Name:	Linwood WRF
Location (Address, City, State):	500 Linwood Drive, Gainesville, GA 30501
Contact Person:	Dewayne Cooper, Plant Manager
Telephone:	(770) 550-0745
Email:	dcooper@gainesville.gov

Reference Operating Plants – Flow Information		
Condition	**Design**	**Actual (Average over Last Year)**
Average Annual Daily Flow (MGD)	4.6	2.924
Maximum Month Average Daily Flow (MGD)	5.0	3.123
Peak Hourly Flow (MGD)	10.1	

Reference Project Personnel			
Condition	**Years with Company**	**Assigned to this Project (Yes/No)**	**Name**
Project Manager	22	No	Rob William
Piping Designer	26	No	Jeff Penny
Integrator (Programmer)	22/21	Yes	Dorithy Courtney
Startup Technician	23	Yes	Sander Tulok
Warranty Support	21	Yes	Matt Stapleford

Reference Operating Plants – Influent Conditions		
Parameter	**Design**	**Actual (Average over Last Year)**
BOD5 (mg/l)	273	147
TSS (mg/l)	470	157
NH3-N (mg/l)	-	35.0
COD (mg/l)	-	-
TKN (mg/l)	62	Not recorded
Minimum Temperature (deg C)	12	Nor recorded
Oils and Grease (FOG) (mg/l)	< 150	23.71

Reference Operating Plants – Effluent Conditions		
Parameter	**Design**	**Actual (Average over Last Year)**
BOD5 (mg/l)	< 25	0.66
NH3-N (mg/l)	< 0.5	0.1
Total Nitrogen (mg/l as N)	-	0.355
Turbidity Before Disinfection (NTU)	< 1	0.051

Copyright© 2019 National Society of Professional Engineers, American Council of Engineering Companies, and American Society of Civil Engineers. All rights reserved.

Reference Operating Plants – MBR Conditions		
Parameter	**Design**	**Actual (Average over Last Year)**
MLSS (mg/l)	10,000 - 12,000 (Bioreactor)	10.851 (Bioreactor)
SRT (days)	30.2	38
AAF Flux (gfd)	7.8	4.95
MMF Flux (gfd)	8.5	5.30
PDF Flux (gfd)		

Reference Operating Plants – Other Process Conditions	
Condition	**Facility Information**
Is denitrification required at this facility (y/n)	No. Alkalinity recovery was included in the design.
If yes, what is the total anoxic volume at this facility? (US gal)	860,000
What is the total volume of the aeration zones at this facility? (US gal)	2,585,000
Does the total volume of the aeration zones include the MBR zone volume? (y/n)	No
If no, what is the total MBR zone volume? (US gal)	320,000

Reference Operating Plants – Cleaning Conditions			
	Removed for Cleaning	**Clean In Place**	**Both**
Standard Membrane Cleaning Procedure(s) (select one and fill in clean information)		X	

Reference Operating Plants – Removed for Clean Information						
Process	**Is Process Used? Yes**	**No**	**Number of Workers Required for Process**	**How often is Process Performed (Times per Year)**	**Average Time per Cassette (hours)**	**Percent Solution (by weight)**
Manual Cleaning (Not Applicable)						
Hose Down		X				
Manual Debris Removal		X				
Manual Scrubbing		X				
Separate Chemical Solution Soak (Not Applicable)						
Sodium Hypochlorite						
Citric Acid						
Other?						
Other?						
Other Types of Cleaning						
List						

Copyright© 2019 National Society of Professional Engineers, American Council of Engineering Companies, and American Society of Civil Engineers. All rights reserved.

Reference Operating Plants – Clean In Place Information						
Process	Is Process Used? Yes	Is Process Used? No	Number of Workers Required for Process	How often is Process Performed (Times per Year)	Average Time per Cassette (hours)	Percent Solution (by weight)
In-Situ Chemical Solution Soak in Tank - Maintenance Cleraning						
Sodium Hypochlorite	X			52	0.83	0.02
Citric Acid	X			52	0.83	0.2
Sodium Hydroxide		X		-		-
Membrane Relax	X					
Other?						
Tank Drain, Chemical Solution Soak in Tank - Recovery Cleaning						
Sodium Hypochlorite	X			1-2	8	0.1
Citric Acid	X			< 0.1	8	0.2
Sodium Hydroxide		X		-	-	-
Backpulse	X					
Extended Chlorine Backpulse		X		-	-	-
Other Types of Cleaning						
List						

Notes:

1. Backpulse included in design, but not used.
2. Maintenance cleaning is done on a train basis. Average time per cassette is stated as total maintenance cleaning duration per day per train in hours.

Copyright© 2019 National Society of Professional Engineers, American Council of Engineering Companies, and American Society of Civil Engineers. All rights reserved.

Reference Operating Plants – Facility Information	
Item	**Parameter**
Facility Name:	Brush Creek Wastewater Treatment Plant
Location (Address, City, State):	Cranberry, PA
Contact Person:	Mike Sedon, Manager, Brush Creek Plant Operations
Telephone:	Tel: (724) 776-4806 x 1300, Cell: (724) 272-1692
Email:	mike.sedon@cranberrytownship.

Reference Operating Plants – Flow Information		
Condition	**Design**	**Actual (Average over Last Year)**
Average Annual Daily Flow (MGD)	7.20	3.64
Maximum Month Average Daily Flow (MGD)	10.29	4.02
Peak Hourly Flow (MGD)	24.35	23.33

Reference Project Personnel			
Condition	**Years with Company**	**Assigned to this Project (Yes/No)**	**Name**
Project Manager	22	No	Rob Williams
Piping Designer	17	No	Ali Asfia
Integrator (Programmer)	21	Yes	Anil Varma
Startup Technician	12/18	No	Yousef Butt/Yuri Drozdowsky
Warranty Support	21	Yes	Matt Stapleford

Reference Operating Plants – Influent Conditions		
Parameter	**Design**	**Actual (Average over Last Year)**
BOD5 (mg/l)	105.7	238
TSS (mg/l)	82.2	284
NH3-N (mg/l)	23.3	31.6
COD (mg/l)	250.9	562
TKN (mg/l)		39
Minimum Temperature (deg C)	11	9.2
Oils and Grease (FOG) (mg/l)	<100	27.4

Reference Operating Plants – Effluent Conditions		
Parameter	**Design**	**Actual (Average over Last Year)**
BOD5 (mg/l)	<5	1.18
NH3-N (mg/l)	<1	0.21
Total Nitrogen (mg/l as N)	<4	22
Turbidity Before Disinfection (NTU)	<0.2 NTU, 90%, <0.5, 100%	

Note: Plant effluent TSS <= 2.0 mg/L

Copyright© 2019 National Society of Professional Engineers, American Council of Engineering Companies, and American Society of Civil Engineers. All rights reserved.

Reference Operating Plants – MBR Conditions		
Parameter	**Design**	**Actual (Average over Last Year)**
MLSS (mg/l)	8,000	8,200
SRT (days)		19.2 Total SRT
AAF Flux (gfd)	7.31 (8.76) 10.96 (4 trains)	4.11
MMF Flux (gfd)	10.45 (12.53)	15.98
PDF Flux (gfd)	19.24 (29.64)	4.16

Note: Flux in brackets is N-1 net flux.

Reference Operating Plants – Other Process Conditions	
Condition	**Facility Information**
Is denitrification required at this facility (y/n)	Not required by current permit. Included for alkalinity recovery and potential TN limit.
If yes, what is the total anoxic volume at this facility? (US gal)	376,000
What is the total volume of the aeration zones at this facility? (US gal)	1,656,000
Does the total volume of the aeration zones include the MBR zone volume? (y/n)	No
If no, what is the total MBR zone volume? (US gal)	4,570

Reference Operating Plants – Cleaning Conditions			
	Removed for Cleaning	**Clean In Place**	**Both**
Standard Membrane Cleaning Procedure(s) (select one and fill in clean information)	x	x	

Note: Client proactively removes some cassettes for hose down and inspection.

Reference Operating Plants – Removed for Clean Information						
Process	**Is Process Used? Yes**	**No**	**Number of Workers Required for Process**	**How often is Process Performed (Times per Year)**	**Average Time per Cassette (hours)**	**Percent Solution (by weight)**
Manual Cleaning						
Hose Down	x		3	1 Note 1	1	
Manual Debris Removal	x		3	1 Note 1	1	
Manual Scrubbing			3			
Separate Chemical Solution Soak						
Sodium Hypochlorite						
Citric Acid						
Other?						
Other?						
Other Types of Cleaning						
List						

Note 1: Client removed all 60 cassettes in Year 1, 10 cassettes per year since then.

Copyright© 2019 National Society of Professional Engineers, American Council of Engineering Companies, and American Society of Civil Engineers. All rights reserved.

Reference Operating Plants – Clean In Place Information						
Process	Is Process Used? Yes	No	Number of Workers Required for Process	How often is Process Performed (Times per Year)	Average Time per Cassette (hours)	Percent Solution (by weight)
In-Situ Chemical Solution Soak in Tank (Maintenance Clean)						
Sodium Hypochlorite	x		N/A	52	0.83	0.02
Citric Acid	x		N/A	52	0.83	0.2
Sodium Hydroxide		x				
Membrane Relax	x		N/A		0.008	N/A
Other?						
Tank Drain, Chemical Solution Soak in Tank (Recovery Cleaning)						
Sodium Hypochlorite	x			2	20	0.1
Citric Acid	x		N/A	2	20	0.2
Sodium Hydroxide		x				
Backpulse	x		N/A		N/A	
Extended Chlorine Backpulse		x				
Other Types of Cleaning						
List						

Note: Maintenance cleaning is done on a per train basis. Average Time per cassette (hours) is stated as total maintenance clean duration per day per train in hours.

Copyright© 2019 National Society of Professional Engineers, American Council of Engineering Companies, and American Society of Civil Engineers. All rights reserved.

Reference Operating Plants – Facility Information	
Item	**Parameter**
Facility Name:	Loch Sheldrake WWTP
Location (Address, City, State):	1077 State Route 52 Loch Sheldrake, NY 12759
Contact Person:	Michael A Herbert
Telephone:	Cell (845) 807-1728, Tel (845) 434-2709
Email:	mherbert@fallsburgny.com

Reference Operating Plants – Flow Information		
Condition	**Design**	**Actual (Average over Last Year)**
Average Annual Daily Flow (MGD)	0.562	0.589
Maximum Month Average Daily Flow (MGD)	1.013	2.88
Peak Hourly Flow (MGD)	1.124	2.88

Reference Project Personnel			
Condition	**Years with Company**	**Assigned to this Project (Yes/No)**	**Name**
Project Manager	27	No	Grant Delsnyder
Piping Designer	11	No	Katie Peach
Integrator (Programmer)	22/21	Yes	Dorothy Courtney, Anil Varma
Startup Technician	18	No	Yurij Drozdowsky
Warranty Support	21	Yes	Matt Stapleford

Reference Operating Plants – Influent Conditions		
Parameter	**Design**	**Actual (Average over Last Year)**
BOD5 (mg/l)	219	268
TSS (mg/l)	219	245
NH3-N (mg/l)	<1.86 May 1-Oct 31	13.6
COD (mg/l)		N/A
TKN (mg/l)	30	24.6
Minimum Temperature (deg C)	11C Bioreactor, 7C MBR	53.9
Oils and Grease (FOG) (mg/l)	<150	N/A

Reference Operating Plants – Effluent Conditions		
Parameter	**Design**	**Actual (Average over Last Year)**
BOD5 (mg/l)	5	3.2
NH3-N (mg/l)	1	5.87
Total Nitrogen (mg/l as N)	NO3/NO3-N <2.33 TN<4	N/A
Turbidity Before Disinfection (NTU)	< 1	< 1

Copyright© 2019 National Society of Professional Engineers, American Council of Engineering Companies, and American Society of Civil Engineers. All rights reserved.

Reference Operating Plants – MBR Conditions		
Parameter	**Design**	**Actual (Average over Last Year)**
MLSS (mg/l)	8,000/10,000	4,200
SRT (days)	10 d ASRT	12.1
AAF Flux (gfd)	7.91	N/A
MMF Flux (gfd)	9.51	N/A
PDF Flux (gfd)	10.55	N/A

Note: MLSS (mg/l): Bioreactor/MBR

Reference Operating Plants – Other Process Conditions	
Condition	**Facility Information**
Is denitrification required at this facility (y/n)	Yes
If yes, what is the total anoxic volume at this facility? (US gal)	80,000 gal pre-anoxic, 70,000 gal swing zone.
What is the total volume of the aeration zones at this facility? (US gal)	270,000 gal. (200,000 gal aerobic zone, 70,000 gal swing zone.
Does the total volume of the aeration zones include the MBR zone volume? (y/n)	No
If no, what is the total MBR zone volume? (US gal)	39,310 gal

Reference Operating Plants – Cleaning Conditions			
	Removed for Cleaning	**Clean In Place**	**Both**
Standard Membrane Cleaning Procedure(s) (select one and fill in clean information)		X	

Reference Operating Plants – Removed for Clean Information						
Process	**Is Process Used? Yes**	**No**	**Number of Workers Required for Process**	**How often is Process Performed (Times per Year)**	**Average Time per Cassette (hours)**	**Percent Solution (by weight)**
Manual Cleaning						
Hose Down	X		1	1		
Manual Debris Removal	X		1	1		
Manual Scrubbing		X				
Separate Chemical Solution Soak						
Sodium Hypochlorite						
Citric Acid						
Other?						
Other?						
Other Types of Cleaning						
List						

Copyright© 2019 National Society of Professional Engineers, American Council of Engineering Companies, and American Society of Civil Engineers. All rights reserved.

Reference Operating Plants – Clean In Place Information						
Process	Is Process Used? Yes	Is Process Used? No	Number of Workers Required for Process	How often is Process Performed (Times per Year)	Average Time per Cassette (hours)	Percent Solution (by weight)
In-Situ Chemical Solution Soak in Tank (Maintenance Cleaning)						
Sodium Hypochlorite	X		N/A	1-2	6	0.10
Citric Acid		X	N/A	1-2	6	0.20
Sodium Hydroxide		X				
Membrane Relax	X					
Other?						
Tank Drain, Chemical Solution Soak in Tank (Recovery Cleaning)						
Sodium Hypochlorite	X		N/A	104	0.02	
Citric Acid						
Sodium Hydroxide		X				
Backpulse	X		N/A			
Extended Chlorine Backpulse		X				
Other Types of Cleaning						
List						

Notes:
1 Loch Sheldrake is a 3-train MBR.
2 Maintenance cleaning is done on a per train basis. Average time per cassette (hours) is stated as total maintenance cleaning duration per day per train in hours.

Copyright© 2019 National Society of Professional Engineers, American Council of Engineering Companies, and American Society of Civil Engineers. All rights reserved.

BID BOND (DAMAGES FORM)

Bidder	**Surety**
Name: SUEZ WTS Systems USA, Inc. Address *(principal place of business)*: 3239 Dundas Street West Oakville, ON L6M 4B2	Name: Euler Hermes North America Insurance Company Address *(principal place of business)*: 800 Red Brook Boulevard Owings Mills, MD 21117
Owner	**Bid**
Name: **Town of New Windsor** Address *(principal place of business)*: **555 Union Avenue** **New Windsor, NY 12553**	Project *(name and location)*: **Caesars Lane WWTP MBR System Pre-Selection** Bid Due Date: **19 July 2022**

Bond 82733-ALLI-220

Bond Amount: Five Percent of Amount Bid (5%)

Date of Bond: 06/22/2022

Surety and Bidder, intending to be legally bound hereby, subject to the terms set forth in this Bid Bond, do each cause this Bid Bond to be duly executed by an authorized officer, agent, or representative.

Bidder	Surety
SUEZ WTS Systems USA, Inc. *(Full formal name of Bidder)*	Euler Hermes North America Insurance Company *(Full formal name of Surety) (corporate seal)*
By: Michael Bisson *(Signature)*	By: Jessica Iannotta *(Signature) (Attach Power of Attorney)*
Name: MICHAEL BISSON *(Printed or typed)*	Name: Jessica Iannotta *(Printed or typed)*
Titie: COMMERCIAL CONTRACTS MANAGER	Title: Attorney-In-Fact
Attest: Cameron Harrop *(Signature)*	Attest: Mariya Leonidov *(Signature)*
Name: Cameron Harrop *(Printed or typed)*	Name: Mariya Leonidov *(Printed or typed)*
Title:	Title: Witness as to Surety

Notes: (1) Note: Addresses are to be used for giving any required notice. (2) Provide execution by any additional parties, such as joint venturers, if necessary.

EJCDC® C-435, Bid Bond (Damages Form).
Copyright© 2018 National Society of Professional Engineer, American Council of Engineering Companies, and American Society of Civil Engineers. All rights reserved.

1. Bidder and Surety, jointly and severally, bind themselves, their heirs, executors, administrators, successors, and assigns to pay to Owner upon default of Bidder any difference between the total amount of Bidder's Bid and the total amount of the Bid of the next lowest, responsible Bidder that submitted a responsive Bid, as determined by Owner, for the work required by the Contract Documents, provided that:

    1.1. If there is no such next Bidder, and Owner does not abandon the Project, then Bidder and Surety shall pay to Owner the bond amount set forth on the face of this Bond, and

    1.2. In no event will Bidder's and Surety's obligation hereunder exceed the bond amount set forth on the face of this Bond.

    1.3. Recovery under the terms of this Bond will be Owner's sole and exclusive remedy upon default of Bidder.

2. Default of Bidder occurs upon the failure of Bidder to deliver within the time required by the Bidding Documents (or any extension thereof agreed to in writing by Owner) the executed Agreement required by the Bidding Documents and any performance and payment bonds required by the Bidding Documents.

3. This obligation will be null and void if:

    3.1. Owner accepts Bidder's Bid and Bidder delivers within the time required by the Bidding Documents (or any extension thereof agreed to in writing by Owner) the executed Agreement required by the Bidding Documents and any performance and payment bonds required by the Bidding Documents, or

    3.2. All Bids are rejected by Owner, or

    3.3. Owner fails to issue a Notice of Award to Bidder within the time specified in the Bidding Documents (or any extension thereof agreed to in writing by Bidder and, if applicable, consented to by Surety when required by Paragraph 5 hereof).

4. Payment under this Bond will be due and payable upon default of Bidder and within 30 calendar days after receipt by Bidder and Surety of written notice of default from Owner, which notice will be given with reasonable promptness, identifying this Bond and the Project and including a statement of the amount due.

5. Surety waives notice of any and all defenses based on or arising out of any time extension to issue Notice of Award agreed to in writing by Owner and Bidder, provided that the total time for issuing Notice of Award including extensions will not in the aggregate exceed 120 days from Bid due date without Surety's written consent.

6. No suit or action will be commenced under this Bond prior to 30 calendar days after the notice of default required in Paragraph 4 above is received by Bidder and Surety, and in no case later than one year after the Bid due date.

7. Any suit or action under this Bond must be commenced only in a court of competent jurisdiction located in the state in which the Project is located.

8. Notices required hereunder must be in writing and sent to Bidder and Surety at their respective addresses shown on the face of this Bond. Such notices may be sent by personal delivery, commercial courier, or by United States Postal Service registered or certified mail, return receipt requested, postage pre-paid, and will be deemed to be effective upon receipt by the party concerned.

9. Surety shall cause to be attached to this Bond a current and effective Power of Attorney evidencing the authority of the officer, agent, or representative who executed this Bond on behalf of Surety to execute, seal, and deliver such Bond and bind the Surety thereby.

10. This Bond is intended to conform to all applicable statutory requirements. Any applicable requirement of any applicable statute that has been omitted from this Bond will be deemed to be included herein as if set forth at length. If any provision of this Bond conflicts with any applicable statute, then the provision of said statute governs and the remainder of this Bond that is not in conflict therewith continues in full force and effect.

11. The term "Bid" as used herein includes a Bid, offer, or proposal as applicable.

Copyright© 2018 National Society of Professional Engineer, American Council of Engineering Companies, and American Society of Civil Engineers. All rights reserved.

CORPORATE ACKNOWLEDGMENT

PROVINCE
STATE OF ONTARIO

COUNTY OF HALTON

On this 27TH day of JUNE, 2022 before me

personally came

MICHAEL BENSON to me known,

who, being by me duly sworn, did depose and say that he/she resides in

OAKVILLE that he/she is the

COMM. CONTRACTS MGR. of SUEZ WTS Systems USA, Inc.

that corporation described in and which executed the above instrument; that he/she knows the seal of said corporation; that the seal affixed to said instrument is such corporate seal; that it was so affixed by order of the Board of Directors of said corporation, and he/she signed his/her name thereto by like order.

(SEAL)

David Blair Bingham, Notary Public,
Regional Municipality of Halton, limited to the attestation of instruments and the taking of affidavits, for SUEZ Water Technologies & Solutions Canada and its affiliates.
Expires December 18, 2023.

State of New Jersey
County of Morris } ss:

On June 22, 2022, before me, a Notary Public in and for said County and State, residing therein, duly commissioned and sworn, personally appeared

Jessica Iannotta

known to me to be Attorney-in-Fact of Euler Hermes North America Insurance Company the corporation described in and that executed the within and foregoing instrument, and known to me to be the person who executed the said instrument in behalf of the said corporation, and he duly acknowledged to me that such corporation executed the same.

IN WITNESS WHEREOF, I have hereunto set my hand and affixed my official seal, the day and year stated in this certificate above.

My Commission Expires April 16, 2024

April Perez Notary Public

APRIL PEREZ
NOTARY PUBLIC
STATE OF NEW JERSEY
MY COMMISSION EXPIRES APR. 16, 2024

EULER HERMES

16530

EULER HERMES NORTH AMERICA INSURANCE COMPANY
800 Red Brook Boulevard * Owings Mills, Maryland 21117

The number of persons authorized by this Power of Attorney is not more than: 6

POWER OF ATTORNEY

KNOW ALL MEN BY THESE PRESENTS: That EULER HERMES NORTH AMERICA INSURANCE COMPANY (EULER HERMES), a corporation organized and existing under the laws of the state of Maryland, does hereby nominate, constitute, and appoint the person or persons named below, each individually if more than one is named, its true and lawful attorney-in-fact, for and in its name, place, and stead to execute on behalf of EULER HERMES, as surety, any and all bonds, undertakings, and contracts of suretyship, or other written obligations in the nature thereof; provided that the liability of EULER HERMES on any such bond, undertaking, or contract of suretyship executed under this authority shall not exceed the limit stated below.

NAME		ADDRESS	LIMIT OF POWER
Megan J. Schlueter	Kristin S. Bender	445 South Street	Unlimited
Jessica Iannotta	Kelly O'Malley	Suite 210	
April D. Perez	Joanne Czlapinski	Morristown, NJ 07960	

This Power of Attorney revokes all previous powers issued on behalf of the attorney(s)-in-fact named above.

IN WITNESS WHEREOF, EULER HERMES has caused these presents to be signed and attested by its appropriate officers and its corporate seal hereunder affixed this 1st day of January, 20 21.

James Daly, President and CEO-The Americas

Keith Sherman, Senior Vice President and Chief Operating Officer-Surety

State of Maryland, County of Baltimore

On this 1st day of January, 20 21, before me personally appeared Keith Sherman, to me known, being duly sworn, deposes and says that he resides in Phoenix, MD; that he is the Senior Vice President and Operating Officer-Surety of EULER HERMES, the Company described herein and which executed the above instrument; that he know the seal of EULER HERMES; that the seal affixed to said instrument is such corporate seal; that it was so affixed by authority of the Board of Directors of EULER HERMES; and that he signed his name thereto by like authority.

Notary Public

Notarial Seal

This Commission Expires April 4, 2023

This Power of Attorney is granted by authority of the following resolutions adopted by the Board of Directors of EULER HERMES NORTH AMERICA INSURANCE COMPANY (Company) by unanimous consent on October 1, 2015.

RESOLVED: That the President, Executive Vice President, Senior Vice President, Vice President, Secretary, Assistant Vice Secretary, and Senior Vice President and Chief Operating Officer-Surety, be and hereby are authorized from time to time to appoint one or more Attorneys-in-Fact to execute on behalf of the Company, as surety, any and all bonds, undertakings and contracts of suretyship, or other written obligation in the nature thereof; to proscribe their respective duties and all respective limits of their authority; and to revoke any such appointment at any time.

RESOLVED FURTHER: That the Company seal and signature of the aforesaid officers and may be affixed by facsimile to any Power of Attorney given for the execution of any bond, undertaking, contract of suretyship, or other written obligations in the nature thereof, such signature and seal when so used being hereby adopted by the Company as the original signature of such officer and the original seal of the Company, to be valid and binding upon the Company with the same force and effect as thought manually affixed.

CERTIFICATION

I, Keith Sherman, Senior Vice President and Chief Operating Officer-Surety of EULER HERMES NORTH AMERICA INSURANCE COMPANY, do hereby certify that the foregoing Power of Attorney and the Resolutions of the Board of Directors of October 1, 2015, have not been revoked and are now in full force and effect.

Signed and sealed this 22nd day of June, 20 22.

Keith Sherman, Senior Vice President and Chief Operating Officer-Surety



EULER HERMES
Our knowledge serving your success

EULER HERMES NORTH AMERICA INSURANCE COMPANY

Statutory Statements of Admitted Assets, Liabilities, and Policyholders' Surplus

Statutory Basis at December 31, 2020

(In thousands, except share data)

Admitted Assets		2020
Bonds	$	350,802
Common stocks		9,128
Cash and cash equivalents		55,125
Other investments		30,500
Total cash and invested assets		445,555
Premiums receivable		119,974
Reinsurance recoverable on paid losses		8,577
Net deferred tax assets		14,172
Other admitted assets		26,396
Total admitted assets	$	614,674
Liabilities and Policyholders' Surplus		
Liabilities:		
Unpaid losses and loss adjustment expenses	$	214,647
Unearned premiums		155,439
Premium taxes, licenses, and fees		1,987
Ceded reinsurance premiums payable		15,406
Reinsurance payable on paid losses		1,732
Payable to parent, subsidiaries, and affiliates		10,896
Accounts payable and accrued expenses		56,855
Funds held under reinsurance agreements		1,274
Total liabilities		458,236
Policyholders' surplus:		
Common stock – par value $10 per share. Authorized, issued, and outstanding shares 250,000		2,500
Gross paid-in and contributed surplus		13,167
Unassigned surplus		140,771
Total policyholders' surplus		156,438
Total liabilities and policyholders' surplus	$	614,674

Euler Hermes North America Insurance Company
800 Red Brook Boulevard
Owings Mills, MD 21117
Tel 410 753 0753
Fax 410 753 0940
Toll Free 877 883 3224

A company of Allianz

EULER HERMES
Our knowledge serving your success

Louise Jordan, being duly sworn, affirms that she is the Chief Financial and Administration Officer of Euler Hermes North America Insurance Company, and that to the best of her knowledge and belief, the foregoing statement is a true and correct statement of financial condition of said Company as of 31 December 2020.

Subscribed and sworn to before me this 15th day of JUNE ,2021

Elaine A. McClean – Notary Public

Louise Jordan - CFAO

ELAINE A. MCCLEAN
NOTARY PUBLIC
My Commission Expires
05-18-2023
HARFORD COUNTY, MD

Euler Hermes North America Insurance Company
800 Red Brook Boulevard
Owings Mills, MD 21117
Tel 410 753 0753
Fax 410 753 0940
Toll Free 877 883 3224

A company of Allianz

AGREEMENT BETWEEN BUYER AND SELLER FOR PROCUREMENT CONTRACT

TABLE OF CONTENTS

Page

Article 1— Procurement Contract 1
1.01 *Goods and Special Services* 1
1.02 *The Project* 1
1.03 *Engineer* 1
1.04 *Point of Destination* 2
Article 2— Procurement Contract Times 2
2.01 *Time of the Essence* 2
2.02 Schedule of Procurement Contract Times 2
2.03 *Shop Drawings and Samples* 2
2.04 *Liquidated Damages* 2
Article 3— Procurement Contract Price 3
3.01 Procurement Contract Price and Total Price 3
3.02 Procurement Contract Price and Total Price—Based on Attached Bid 3
3.03 Price Escalation 3
Article 4— Payment Procedures 3
4.01 Submittal and Processing of Applications for Payment 3
4.02 *Progress Payments; Final Payment* 3
Article 5— Assignment of Procurement Contract 4
5.01 *Assignment of Contract* 4
Article 6— Procurement Contract Documents 7
6.01 List of Procurement Contract Documents 7
Article 7— Seller's Representations and Certifications 8
7.01 *Seller's Representations* 8
7.02 *Seller's Certifications* 8
Article 8— Confidentiality 9
8.01 *Confidential Information* 9
8.02 Disclosure of Confidential Information 9

Copyright© 2019 National Society of Professional Engineers, American Council of Engineering Companies, and American Society of Civil Engineers. All rights reserved.

8.03 *Waiver of Immunity* 10

Article 9— Mutual Waiver 10

Exhibit A— Assignment of Procurement Contract, Consent to Assignment, and Acceptance of Assignment 1

Exhibit B— Surety's Consent to Assignment 1

Copyright© 2019 National Society of Professional Engineers, American Council of Engineering Companies, and American Society of Civil Engineers. All rights reserved.

AGREEMENT BETWEEN BUYER AND SELLER FOR PROCUREMENT CONTRACT

This Procurement Agreement is by and between the **Town of New Windsor** ("Buyer") and **Suez WTS Systems USA Inc.** ("Seller").

Terms used in this Procurement Agreement have the meanings stated in the General Conditions of the Procurement Contract and the Supplementary Conditions of the Procurement Contract.

Buyer and Seller hereby agree as follows:

ARTICLE 1—PROCUREMENT CONTRACT

1.01 *Goods and Special Services*

A. Seller shall furnish the Goods and Special Services as specified or indicated in the Procurement Contract Documents. The Goods and Special Services are generally described as follows:

The Work includes furnishing labor, materials, and equipment for the fabrication, supply, start-up, commissioning, performance testing, and operator training of the proposed membrane bioreactor (MBR) system including but not limited to the following equipment and control system components:

1. Membrane equipment
2. Permeate pumps
3. Feed forward or RAS pumps
4. WAS pumps
5. Membrane Air Scour Blowers
6. Fine Bubble Diffusers
7. Tank Mixers
8. Chemical feed equipment for membrane cleaning
9. Membrane system process instrumentation, controls, and integration
10. System start-up, commissioning, performance testing, and training
11. Critical Spare Parts and Tools
12. Operation and Maintenance Manuals and Materials

1.02 *The Project*

A. The Project, of which the Goods and Special Services are a part, is generally described as follows: **Caesars Lane WWTP MBR System Pre-Selection**

1.03 *Engineer*

A. Buyer has retained **MHE Engineering, D.P.C.** ("Engineer"), to prepare Procurement Contract Documents and act as Buyer's representative. Engineer assumes all duties and

Copyright© 2019 National Society of Professional Engineers, American Council of Engineering Companies, and American Society of Civil Engineers. All rights reserved.

responsibilities and has the rights and authority assigned to Engineer in the Procurement Contract Documents in connection with Seller's furnishing of Goods and Special Services.

1.04 *Point of Destination*

A. The Point of Destination is designated as: **145 Caesars Lane, New Windsor, NY 12553.**

ARTICLE 2—PROCUREMENT CONTRACT TIMES

2.01 *Time of the Essence*

A. All time limits for Milestones, including the submittal of Shop Drawings and Samples, the delivery of Goods, and the furnishing of Special Services as stated in the Procurement Contract Documents, are of the essence of the Procurement Contract.

2.02 *Schedule of Procurement Contract Times*

A. Refer to Section 3.2 in Membrane Filtration System Technical Specification 455000.

2.03 *Shop Drawings and Samples*

A. *Submittal of Shop Drawings and Samples*: Seller shall submit all Shop Drawings and Samples required by the Procurement Contract Documents to Engineer for its review and approval.

B. *Engineer's Review*: It is the intent of the parties that Engineer will conduct its review of Shop Drawings and Samples and issue its approval, or a denial accompanied by substantive comments regarding information needed to gain approval, within **15** days after Seller's submittal of such Shop Drawings and Samples, or within such longer period that is needed because of the quantity and quality of such submittals. Resubmittals will be limited whenever possible.

2.04 *Liquidated Damages*

A. Buyer and Seller recognize that time is of the essence as stated in Paragraph 2.01, and that Buyer will suffer financial and other losses if the Goods are not delivered to the Point of Destination and ready for receipt of delivery by Buyer within the time specified in Paragraph 2.02, plus any extensions thereof allowed in accordance with this Procurement Contract. The parties also recognize that the timely performance of services by others involved in the Project is materially dependent upon Seller's specific compliance with the delivery requirements of Paragraph 2.02. Liquidated damages in the sum of Two Hundred dollars ($200.00) per day plus engineering charges, will be assessed as provided in the Contract Documents.

B. In view of the difficulty in accurately ascertaining the loss in which the Owner will suffer by reason of such delay in the completion of work, said per diem sum is hereby fixed and agreed to by the Selleras the liquidated damages, upon the execution of the Agreement.

C. Separate and in addition to the per day liquidated damages, shall be added, engineering costs, inspection fees and administrative costs for that time after the expiration of the time of completion incurred by the Owner, and any penalties which may be assessed against the Owner by other agencies as a result of the delay to complete the work. Such costs shall be at the set rate for services paid by the Owner for the firm providing the services. Seller's obligation to pay liquidated damages pursuant to the Agreement shall be limited to an amount equal to twenty percent (20%) of the Seller's contract price.

Copyright© 2019 National Society of Professional Engineers, American Council of Engineering Companies, and American Society of Civil Engineers. All rights reserved.

ARTICLE 3—PROCUREMENT CONTRACT PRICE

3.01 *Procurement Contract Price and Total Price*

A. The Procurement Contract Price is comprised of the Lump Sum and Unit Price amounts set forth in the following paragraphs.

B. Buyer shall pay Seller a Lump Sum of $**3,826,000.00** for furnishing the Goods and Special Services (other than any Unit Price Goods and Special Services) in accordance with the Procurement Contract Documents. Such Lump Sum amount accounts for the following Buyer-accepted alternates: **None.**

C. Buyer's Contingency Allowance is stipulated as $**0.0**. If no amount is stated, the Buyer's Contingency Allowance is zero. Buyer's use of such allowance, including resulting compensation of Buyer, is governed by Paragraph 11.06 of the General Conditions.

D. The Total Price is **$3,826,000.00** Such Total Price is comprised of the Lump Sum amount (taking into account any accepted alternates), Unit Price Goods and Special Services amount (if any) (subject to final adjustment), and Buyer's Contingency Allowance (if any) (subject to final adjustment).

3.02 *Procurement Contract Price and Total Price—Based on Attached Bid*

A. For furnishing the Goods and Special Services in accordance with the Procurement Contract Documents, Buyer shall pay Seller the prices stated in Seller's Bid, attached hereto as an exhibit, subject to final adjustments for Unit Price Goods and Special Services and Buyer's Contingency Allowance, if any, and subject to the following Buyer-accepted alternates: **None.**

3.03 Price Escalation

The buyer is currently considering the inclusion of a price escalation clause. If one is incorporated it will be provided via an addendum.

ARTICLE 4—PAYMENT PROCEDURES

4.01 *Submittal and Processing of Applications for Payment*

A. Seller shall submit Applications for Payment in accordance with Article 13 of the General Conditions and the following paragraphs. Engineer and Buyer will process such Applications for Payment in accordance with said Article 13.

4.02 *Progress Payments; Final Payment*

A. Seller may submit an Application for Payment requesting the stated percentage of Procurement Contract Price upon attainment of each of the following Payment Line Items:

Payment Line Item (Lump Sum)	Percentage of Lump Sum
1. **Receipt of Approval of Engineering Design and Shop Drawings**	**5**
2. **Notice to Commence Fabrication**	**5**
3. **Delivery of Goods to Point of Destination in accordance with the Procurement Contract Documents**	**70**

Copyright© 2019 National Society of Professional Engineers, American Council of Engineering Companies, and American Society of Civil Engineers. All rights reserved.

4. **Completion of Special Services in accordance with Procurement Contract Documents**	**15**
5. Final Payment: **Correction of non-conformities, provision of final Operations and Maintenance manuals, submittal of warranties and other final documentation required by the Procurement Contract Documents**	**5**
Total Procurement Contract Price (Lump Sum)	100

B. For Unit Price Goods and Special Services, if any, or for payments owed to Seller as a result of authorizations by Buyer under the Buyer's Contingency Allowance (if any), Seller shall submit a separate Application for Payment, no more frequently than monthly, that states (1) the actual quantities of such Unit Price Goods and Special Services that have been furnished, and the applicable unit prices; and (2) the services or items performed or furnished under the Buyer's Contingency Allowance, and the amounts owed. If practical, and at Seller's option, Seller may apply for such unit price and Buyer's Contingency Allowance payments in a separate section of an Application for Payment submitted under Paragraph 4.02.A for lump sum items.

C. Buyer shall pay Seller the amount owed under an Application for Payment within 30 days after Engineer's presentation to Buyer of the Application for Payment and Engineer's recommendation.

ARTICLE 5—ASSIGNMENT OF PROCUREMENT CONTRACT

5.01 *Assignment of Contract*

A. Buyer has the right to assign this Procurement Contract for furnishing Goods and Special Services, but only to a person or entity with sufficient apparent ability to satisfy all of Buyer's obligations under this Procurement Contract, and Seller hereby consents to such assignment. Forms documenting the assignment of the Procurement Contract, and consent of Seller's surety to the assignment, have been executed by Buyer, Seller, and Seller's surety, and are attached as exhibits to this Procurement Agreement. If so, assigned the following provisions apply:

1. The Procurement Contract is initially executed in the name of the entity identified herein as Buyer, and will be assigned by such Buyer (as assignor) to a construction contractor (Contractor/Assignee) designated by such Buyer. The assignment will occur on the effective date of the construction contract between such Buyer (Project Owner) and the Contractor/Assignee, which is expected to occur on or about **June 2024.** Commencing on the date of acceptance of assignment by the Contractor/Assignee, all references in the Procurement Contract to "Buyer" shall mean the designated Contractor/Assignee.

2. The assignment of this Procurement Contract relieves the assignor from all further obligations and liabilities under this Procurement Contract. After assignment, Seller shall become a subcontractor or supplier to the Contractor/Assignee and, except as noted herein, all rights, duties, and obligations of Buyer under the Procurement Contract become the rights, duties, and obligations of the Contractor/Assignee.

3. After assignment:

Copyright© 2019 National Society of Professional Engineers, American Council of Engineering Companies, and American Society of Civil Engineers. All rights reserved.

1. The Procurement Drawings and Procurement Specifications, and any modifying Addenda will become "Contract Documents" under the construction contract.
2. If the Procurement Drawings or Procurement Specifications, as "Contract Documents" under the construction contract, are duly modified under such construction contract, then Seller and Contractor/Assignee shall enter into a corresponding Change Order under the applicable provisions of this Procurement Contract.
3. The Procurement Drawings and Procurement Specifications may not be modified by Seller or Contractor/Assignee, singly or in tandem, except as such Procurement Drawings or Procurement Specifications, as "Contract Documents" under the construction contract, have been duly modified under such construction contract.
4. All performance warranties, guarantees, and indemnifications required by the Procurement Contract will continue to run for the benefit of assignor (Project Owner) and, in addition, for the benefit of the Contractor/Assignee. However, if assignor (Project Owner) and Contractor/Assignee make the same warranty or guarantee claim, then Seller shall only be liable once for such claim. Other than its remedies under such warranties, guarantees, and indemnifications, assignor will not retain direct rights under this Procurement Contract, but will have rights and remedies as a party to the construction contract, whose scope of work will encompass the Procurement Drawings, Procurement Specifications, and modifying Addenda; provided, however, that any limitations on Seller's liability in this Procurement Contract will continue to bind the original Buyer (assignor) after assignment.
5. The Contractor/Assignee shall have all the rights of the Buyer under the Performance Bond and Payment Bond.
6. Seller shall submit all Applications for Payment directly to Contractor/Assignee.
    1) Contractor/Assignee shall review each Application for Payment promptly, determine the amount that Contractor/Assignee approves for payment, and then include the amount approved in the next application for payment submitted to Project Owner (or Engineer) under the construction contract.
    2) Contractor/Assignee shall pay Seller within **15** days of receipt of payment from the Project Owner under the construction contract.
    3) After assignment Engineer will review, approve, or deny the content of Applications for Payment under the Procurement Contract only to the extent that Contractor/Assignee, as construction contractor, has incorporated such content into payment applications that Engineer reviews under the construction contract.
7. The Contractor/Assignee shall have all the rights of the Buyer under any pending Claim by Buyer.
8. All Claims and supporting documentation will be submitted directly by the claimant party (either Buyer **[Contractor/Assignee]** or Seller), to the other party, without submittal to Engineer.

Copyright© 2019 National Society of Professional Engineers, American Council of Engineering Companies, and American Society of Civil Engineers. All rights reserved.

1) The other party will render a response in writing within 30 days of receipt of the last submittal of claimant.

2) If the other party does not render a written response to a Claim within 30 days after receipt of the last submittal of the claimant, the other party shall be deemed to have approved the Claim in its entirety.

3) The other party's written response to a Claim, or the approval of the Claim in its entirety as a function of failure to respond within 30 days, will be final and binding upon Buyer and Seller 30 days after it is issued, unless within such 30 days of issuance either Buyer or Seller appeals the result by initiating the mediation of the Claim in accordance with the dispute resolution procedures set forth in Paragraph 12.02 of the General Conditions.

4) Any Claim by Seller that Contractor/Assignee may choose to submit, present, or forward to Project Owner must be submitted to Buyer within sufficient time for Contractor/Assignee to preserve its rights under the construction contract, notwithstanding any procedures or time limits in this Procurement Contract.

9. Seller's recovery of additional cost, time, or both cost and time for any Claim attributable to the Project Owner will be limited to the proportionate recovery by Contractor/Assignee against Project Owner for such Claim. Seller will cooperate and assist Contractor/Assignee in pursuing any Claim by Contractor/Assignee against Project Owner on behalf of Seller, including the timely preparation and delivery of supporting documentation.

10. If the pursuit of any claim by Contractor/Assignee against Project Owner on Seller's behalf requires the expenditure by Contractor/Assignee of legal or consulting fees, or results in litigation, arbitration, or any dispute resolution procedures, Seller agrees to pay for a proportionate share of attorneys' fees, consultant fees, and litigation, arbitration, and other resolution costs incurred by Contractor/Assignee in pursuing the claim on behalf of Seller, based upon the amount claimed by Seller as compared to the total value of the claim pursued by the Contractor/Assignee.

11. All rights, duties, and obligations of Engineer to Contractor/Assignee and Seller under this Procurement Contract will cease.

12. Subject to the foregoing provisions, all references in the Procurement Contract to submitting items to Engineer, or to Engineer having tasks or obligations, will be read after such an assignment as requiring submittal to Contractor/Assignee, or as Contractor/Assignee having such tasks or obligations (which Contractor/Assignee may delegate when appropriate).

13. If the Procurement Contract includes a Buyer's Contingency Allowance, upon assignment such allowance will be automatically reduced to the amount previously authorized by Buyer (Project Owner), and cease to be operational.

B. No other assignment by a party hereto of any rights under or interests in the Procurement Contract will be binding on another party hereto without the written consent of the party sought to be bound. Specifically, but without limitation, Procurement Contract payments or other money that may become due, and Procurement Contract payments or other money that are due, may not be assigned without such consent (except to the extent that the effect

Copyright© 2019 National Society of Professional Engineers, American Council of Engineering Companies, and American Society of Civil Engineers. All rights reserved.

of this restriction may be limited by Laws and Regulations). Unless specifically stated to the contrary in any written consent to such an assignment, such an assignment will not release or discharge the assignor from any duty or responsibility under the Procurement Contract Documents.

ARTICLE 6—PROCUREMENT CONTRACT DOCUMENTS

6.01 *List of Procurement Contract Documents*

A. The Procurement Contract Documents consist of the following:

1. This Procurement Agreement.
2. General Conditions of the Procurement Contract.
3. Supplementary Conditions of the Procurement Contract.
4. Procurement Specifications as listed in the Procurement Specifications table of contents
5. Procurement Drawings (not attached but incorporated by reference)
6. Addendas
    1. Addendum No. 1 dated 29 June 2022.
    2. Addendum No. 2 dated 8 July 2022.
7. Bonds:
    1. Performance bond (together with power of attorney).
    2. Payment bond (together with power of attorney).
8. Exhibits to this Procurement Agreement (enumerated as follows):
    1. Exhibit A, Assignment of Contract, Consent to Assignment, and Acceptance of Assignment.
    2. Exhibit B, Surety's Consent to Assignment.
    3. Documentation submitted by Seller **Suez Proposal No. 360077 dated July 20, 2022**; and
9. The following which may be delivered or issued on or after the Effective Date of the Procurement Contract and are not attached hereto:
    1. Change Orders;
    2. Change Directives; and
    3. Field Orders.

B. The documents listed in Paragraph 6.01.A are attached to this Procurement Agreement (except as expressly noted otherwise above).

C. There are no Procurement Contract Documents other than those listed above.

D. The Procurement Contract Documents may only be amended or supplemented as provided in Paragraph 11.01 of the Procurement General Conditions.

Copyright© 2019 National Society of Professional Engineers, American Council of Engineering Companies, and American Society of Civil Engineers. All rights reserved.

ARTICLE 7—SELLER'S REPRESENTATIONS AND CERTIFICATIONS

7.01 *Seller's Representations*

A. In order to induce Buyer to enter into this Procurement Agreement, Seller makes the following representations:

1. Seller has examined and carefully studied the Procurement Contract Documents.

2. If required by the Instructions to Bidders to visit the Point of Destination and the site where the Goods are to be installed or Special Services will be provided, or if, in Seller's judgment, any observable local or site conditions may affect the delivery, cost, progress, or furnishing of the Goods and Special Services, then Seller has visited the Point of Destination and site where the Goods are to be installed or Special Services will be provided (as applicable) and become familiar with and is satisfied as to the observable local and site conditions that may affect delivery, cost, progress, and furnishing of the Goods and Special Services.

3. Seller is familiar with and is satisfied as to all Laws and Regulations that may affect the cost, progress, and performance of Seller's obligations under the Procurement Contract.

4. Seller has carefully studied, considered, and correlated the information known to Seller with respect to the effect of such information on the cost, progress, and performance of Seller's obligations under the Procurement Contract.

5. Seller has given Engineer written notice of all conflicts, errors, ambiguities, or discrepancies that Seller has discovered in the Procurement Contract Documents, and the written resolution (if any) thereof by Engineer is acceptable to Seller.

6. The Procurement Contract Documents are generally sufficient to indicate and convey understanding of all terms and conditions for performance of Seller's obligations under the Procurement Contract.

7. Seller's entry into this Procurement Contract constitutes an incontrovertible representation by Seller that without exception all prices in the Procurement Agreement are premised upon furnishing the Goods and Special Services as required by the Procurement Contract Documents.

7.02 *Seller's Certifications*

A. Seller certifies that it has not engaged in corrupt, fraudulent, collusive, or coercive practices in competing for or in executing the Procurement Contract. For the purposes of this Paragraph 7.02:

1. "corrupt practice" means the offering, giving, receiving, or soliciting of anything of value likely to influence the action of a public official in the bidding process or in the Procurement Contract execution;

2. "fraudulent practice" means an intentional misrepresentation of facts made (a) to influence the bidding process or the execution of the Procurement Contract to the detriment of Buyer, (b) to establish bid or contract prices at artificial non-competitive levels, or (c) to deprive Buyer of the benefits of free and open competition;

Copyright© 2019 National Society of Professional Engineers, American Council of Engineering Companies, and American Society of Civil Engineers. All rights reserved.

3. "collusive practice" means a scheme or arrangement between two or more Bidders, with or without the knowledge of Buyer, a purpose of which is to establish bid prices at artificial, non-competitive levels; and

4. "coercive practice" means harming or threatening to harm, directly or indirectly, persons or their property to influence their participation in the bidding process or affect the execution of the Procurement Contract.

ARTICLE 8—CONFIDENTIALITY

8.01 *Confidential Information*

A. Confidential information is information in documents submitted by Seller that Seller clearly and prominently labels in writing to be a trade secret, proprietary, or confidential. Such documents, if any, will be maintained in a manner that endeavors to avoid disclosing confidential information to third parties, to the extent allowed by Laws and Regulations.

B. Seller shall clearly and prominently mark confidential information with the word "CONFIDENTIAL" on each page or sheet or on the cover of bound documents. Place "CONFIDENTIAL" stamps or watermarks so that they do not obscure any of the required information on the document, either in the original or in a way that would obscure any of the required information in a photocopy of the document.

8.02 *Disclosure of Confidential Information*

A. If Buyer is requested to disclose confidential information, or becomes legally compelled (by oral questions, interrogatories, requests for information or documents, subpoena, civil or criminal investigative demand, public information requests, or other requests under Laws and Regulations) to disclose confidential information, or is required by a regulatory body, governing agency, or controlling authority to disclose confidential information, or make any other disclosure that is prohibited or otherwise constrained by the Procurement Contract, Buyer will provide Seller with prompt notice so Seller may seek an appropriate protective order or other remedy. Seller will be solely responsible for submitting to the regulatory body, governing agency, or controlling authority any arguments, briefs, memoranda, motions, authorities, or other information in opposition to disclosure.

B. Buyer's obligations with respect to confidential information are nullified by the following exceptions:

1. Confidential information becomes a part of the public domain through publication or otherwise, through no fault of the Buyer;

2. Buyer can demonstrate through suitable documentation that the confidential information was already in the Buyer's possession, and not previously marked as confidential, or was otherwise publicly available prior to the Effective Date of the Procurement Contract;

3. The confidential information is subsequently and independently disclosed to the Buyer by a third party who has a lawful right to disclose such information;

4. Buyer has a good faith belief that disclosure is required or justified; or

5. Buyer is required to disclose the confidential information by court order or by applicable Laws and Regulations.

Copyright© 2019 National Society of Professional Engineers, American Council of Engineering Companies, and American Society of Civil Engineers. All rights reserved.

8.03 *Waiver of Immunity*

A. Notwithstanding any other provision of the Procurement Contract, it is stipulated and agreed that by accepting confidential information, Buyer has not and does not waive its legal immunity (if any) from suit or liability.

ARTICLE 9—MUTUAL WAIVER

Deleted.

Copyright© 2019 National Society of Professional Engineers, American Council of Engineering Companies, and American Society of Civil Engineers. All rights reserved.

IN WITNESS WHEREOF, Buyer and Seller have signed this Procurement Agreement. Counterparts have been delivered to Buyer and Seller.

The Effective Date of the Procurement Contract is **_____.**

Buyer	Seller
_____	_____
(typed or printed name of organization)	*(typed or printed name of organization)*
By: _____	By: _____
(individual's signature)	*(individual's signature)*
Date: _____	Date: _____
(date signed)	*(date signed)*
Name: _____	Name: _____
(typed or printed)	*(typed or printed)*
Title: _____	Title: _____
(typed or printed)	*(typed or printed)*
	(If Seller is a corporation, a partnership, or a joint venture, attach evidence of authority to sign.)
Attest: _____	Attest: _____
(individual's signature)	*(individual's signature)*
Title: _____	Title: _____
(typed or printed)	*(typed or printed)*
Address for giving notices:	Address for giving notices:
_____	_____
_____	_____
_____	_____
Designated Representative:	Designated Representative:
Name: _____	Name: _____
(typed or printed)	*(typed or printed)*
Title: _____	Title: _____
(typed or printed)	*(typed or printed)*
Address:	Address:
_____	_____
_____	_____
_____	_____
Phone: _____	Phone: _____
Email: _____	Email: _____
(If Buyer is a corporation, attach evidence of authority to sign. If Buyer is a public body, attach evidence of authority to sign and resolution or other documents authorizing execution of this Agreement.)	

Copyright© 2019 National Society of Professional Engineers, American Council of Engineering Companies, and American Society of Civil Engineers. All rights reserved.

EXHIBIT A—ASSIGNMENT OF PROCUREMENT CONTRACT, CONSENT TO ASSIGNMENT, AND ACCEPTANCE OF ASSIGNMENT

This assignment will be effective on the effective date of the construction contract between Buyer (as "Owner") and Contractor/Assignee (as "Contractor").

The Procurement Contract between_____ ("Buyer") and _____("Seller") for furnishing Goods and Special Services entitled_____(Procurement Contract) is hereby assigned, transferred, and set over to Contractor/Assignee, as assignee, by Buyer, as assignor. Upon assignment the Contractor/Assignee shall have the duties, rights, and obligations of Buyer under the terms of the Procurement Contract, and will be responsible to Owner under the construction contract for the performance of obligations by Seller, which will become a Subcontractor or Supplier to Contractor/Assignee. Buyer, Seller, and Contractor/Assignee hereby acknowledge and agree to be bound by the terms and conditions of assignment set forth in Article 5 of the Agreement Between Buyer and Seller for Procurement Contract.

Assignment Made by Buyer

_____
(typed or printed name of organization)

By: _____ Date: _____
(individual's signature) *(date signed)*

Name: _____ Title: _____
(typed or printed) *(typed or printed)*

If Buyer is a corporation, attach evidence of authority to sign. If Buyer is a public body, attach evidence of authority to sign and resolution or other documents authorizing execution of Buyer-Seller Agreement.

Assignment Acknowledged and Accepted by Seller

_____
(typed or printed name of organization)

By: _____ Date: _____
(individual's signature) *(date signed)*

Name: _____ Title: _____
(typed or printed) *(typed or printed)*

If Seller is a corporation, attach evidence of authority to sign.

Assignment Accepted by Contractor/Assignee

_____
(typed or printed name of organization)

By: _____ Date: _____
(individual's signature) *(date signed)*

Name: _____ Title: _____
(typed or printed) *(typed or printed)*

If Contractor/Assignee is a corporation, attach evidence of authority to sign.

Copyright© 2019 National Society of Professional Engineers, American Council of Engineering Companies, and American Society of Civil Engineers. All rights reserved.

EXHIBIT B—SURETY'S CONSENT TO ASSIGNMENT

Surety hereby acknowledges, agrees, and consents that the Procurement Contract for furnishing Goods and Special Services entitled _____ by and between _____("Buyer") and ("Seller") may be assigned, transferred, and set over to _____("Contractor/Assignee"), in accordance with Article 5 and Exhibit A of the Agreement between Buyer and Seller for Procurement Contract.

Surety further agrees that, upon assignment of the Procurement Contract, the Contractor/Assignee shall have all the rights of the Buyer under the Procurement Performance Bond and Procurement Payment Bond.

Agreement to Assignment Acknowledged and Accepted by Surety

_____
(typed or printed name of organization)

By: _____ Date: _____
(individual's signature) *(date signed)*

Name: _____ Title: _____
(typed or printed) *(typed or printed)*

Attach Power of Attorney.

Copyright© 2019 National Society of Professional Engineers, American Council of Engineering Companies, and American Society of Civil Engineers. All rights reserved.

STANDARD GENERAL CONDITIONS OF THE PROCUREMENT CONTRACT

TABLE OF CONTENTS

Page

Article 1— Definitions and Terminology 1
1.01 Defined Terms 1
1.02 Terminology 4
Article 2— Preliminary Matters 5
2.01 Delivery of Bonds and Evidence of Insurance 5
2.02 Copies of Documents 5
2.03 Electronic Transmittals 6
2.04 Preliminary Schedules 6
2.05 Preliminary Conference 6
2.06 Safety 6
Article 3— Procurement Contract Documents 7
3.01 Intent 7
3.02 Reference Standards 7
3.03 Reporting and Resolving Discrepancies 8
3.04 Requirements of the Procurement Drawings and Procurement Specifications 8
3.05 Reuse of Documents 9
Article 4— Commencement and Schedule 9
4.01 Commencement of Procurement Contract Times 9
4.02 Continuing Performance 9
4.03 Adjustments to Progress Schedule 10
4.04 Delays 10
Article 5— Bonds and Insurance 11
5.01 Performance, Payment, and Other Bonds 11
5.02 Insurance 12
5.03 Surety or Insurance Companies 12
Article 6— Licenses and Fees 13
6.01 Intellectual Property and License Fees 13
6.02 Seller's Infringement 13

Copyright© 2019 National Society of Professional Engineers, American Council of Engineering Companies, and American Society of Civil Engineers. All rights reserved.

6.03 Buyer's Infringement 14
Article 7— Seller's Responsibilities 14
7.01 Performance of Obligations 14
7.02 Labor, Materials and Equipment 14
7.03 Laws and Regulations 15
7.04 "Or Equals" 15
7.05 Taxes 16
7.06 Submittals 16
7.07 Indemnification 19
7.08 Concerning Subcontractors and Suppliers 19
Article 8— Shipping and Delivery 19
8.01 Shipping 19
8.02 Delivery 19
8.03 Risk of Loss 20
Article 9— Buyer's Rights 20
9.01 Seller's Warranties and Guarantees 20
9.02 Inspections and Testing 21
9.03 Non-Conforming Goods and Special Services 22
9.04 Correction Period 23
Article 10— Engineer's Status 24
10.01 Engineer's Role Defined 24
10.02 Duties and Responsibilities; Authority; Limitations 24
Article 11— Changes 25
11.01 Amending and Supplementing the Procurement Contract 25
11.02 Change Orders 25
11.03 Change Directives 25
11.04 Field Orders 26
11.05 Buyer-Authorized Changes in the Goods and Special Services 26
11.06 Buyer's Contingency Allowance 26
11.07 Unauthorized Changes in the Goods and Special Services 26
11.08 Change of Procurement Contract Price 27
11.09 Change of Procurement Contract Times 27
11.10 Notification to Surety 27

Copyright© 2019 National Society of Professional Engineers, American Council of Engineering Companies, and American Society of Civil Engineers. All rights reserved.

Article 12— Claims, Disputes, and Dispute Resolution 27
12.01 Claims 27
12.02 Dispute Resolution Method 28
Article 13— Payment 29
13.01 Applications for Progress Payments 29
13.02 Review of Applications for Progress Payments 29
13.03 Basis and Amount of Progress Payments 31
13.04 Suspension of or Reduction in Payment 31
13.05 Final Payment 32
13.06 Waiver of Claims 33
Article 14— Cancellation, Suspension, and Termination 33
14.01 Cancellation 33
14.02 Suspension of Performance by Buyer 33
14.03 Suspension of Performance by Seller 33
14.04 Breach and Termination 33
Article 15— Miscellaneous 34
15.01 Giving Notice 34
15.02 Controlling Law 34
15.03 Computation of Time 34
15.04 Cumulative Remedies 35
15.05 Survival of Obligations 35
15.06 Entire Agreement 35
15.07 No Waiver 35
15.08 Headings 35
15.09 Successors and Assigns 35

Copyright© 2019 National Society of Professional Engineers, American Council of Engineering Companies, and American Society of Civil Engineers. All rights reserved.

ARTICLE 1—DEFINITIONS AND TERMINOLOGY

1.01 *Defined Terms*

A. Whenever used in the Procurement Bidding Requirements or Procurement Contract Documents and printed with initial capital letters, the terms listed below will have the meanings indicated, which are applicable to the singular or plural thereof. In addition to terms specifically defined, terms with initial capital letters in the Procurement Contract Documents include references to identified articles and paragraphs, and the titles of other documents or forms.

1. *Addenda*—Written or graphic instruments issued prior to the opening of Bids which clarify, correct, or change the Bidding Requirements or the proposed Procurement Contract Documents.

2. *Application for Payment*—The document prepared by Seller, in a form acceptable to Buyer, to request progress or final payments, and which is to be accompanied by such supporting documentation as is required by the Procurement Contract Documents.

3. *Bid*—An offer or proposal of a prospective Seller submitted on the prescribed form setting forth the prices for the Goods and Special Services to be provided.

4. *Bidder*—An individual or entity that, as a prospective Seller, submits a Bid to Buyer.

5. *Buyer*—The individual or entity purchasing the Goods and Special Services.

6. *Change Directive*—A written directive from Buyer to Seller issued on or after the Effective Date of the Procurement Contract, ordering an addition, deletion, or revision in the Goods and Special Services.

7. *Change Order*—A document which is signed by Seller and Buyer and authorizes an addition, deletion, or revision to the Procurement Contract Documents or an adjustment in the Procurement Contract Price or the Procurement Contract Times, issued on or after the Effective Date of the Procurement Contract. Change Orders may be the result of mutual agreement by Buyer and Seller, or of resolution of a Claim.

8. *Claim*—A demand or assertion by Buyer or Seller seeking an adjustment of Procurement Contract Price or Procurement Contract Times, or both, or other relief with respect to the terms of the Procurement Contract. A demand for money or services by a third party is not a Claim.

9. *Contractor/Assignee*—A construction contractor with which Project Owner enters into a construction contract, and to which Project Owner, as initial Buyer, assigns this Procurement Contract.

10. *Effective Date of the Procurement Contract*—The date indicated in the Procurement Agreement on which the Procurement Contract becomes effective.

11. *Electronic Document*—Any Project-related correspondence, attachments to correspondence, data, documents, drawings, information, or graphics, including but not limited to Shop Drawings and other Submittals, that are in an electronic or digital format.

Copyright© 2019 National Society of Professional Engineers, American Council of Engineering Companies, and American Society of Civil Engineers. All rights reserved.

12. *Electronic Means*—Electronic mail (e-mail), upload/download from a secure Project website, or other communications methods that allow: the transmission or communication of Electronic Documents; the documentation of transmissions, including sending and receipt; printing of the transmitted Electronic Document by the recipient; the storage and archiving of the Electronic Document by sender and recipient; and the use by recipient of the Electronic Document for purposes permitted by this Procurement Contract. Electronic Means does not include the use of text messaging, or of Facebook, Twitter, Instagram, or similar social media services for transmission of Electronic Documents.

13. *Engineer*—The individual or entity designated as such in the Procurement Agreement.

14. *Field Order*—A written order issued by Engineer which requires minor changes in the Goods or Special Services, but which does not involve a change in the Procurement Contract Price or Procurement Contract Times.

15. *Goods*—The tangible and movable personal property that is described in the Procurement Contract Documents, regardless of whether the property is to be later attached to realty.

16. *Goods and Special Services*—The full scope of materials, equipment, other items, and services to be furnished by Seller, including Goods, as defined herein, and Special Services, if any, as defined herein. This term refers to both the Goods and the Special Services, or to either the Goods or the Special Services, and to any portion of the Goods or the Special Services, as the context requires.

17. *Laws and Regulations; Laws or Regulations*—Any and all applicable laws, statutes, rules, regulations, ordinances, codes, and binding decrees, resolutions, and orders of any and all governmental bodies, agencies, authorities, and courts having jurisdiction.

18. *Milestone*—A principal event specified in the Procurement Contract that Seller must attain by the date or within the number of days indicated, including but not limited to the delivery of the Goods and the furnishing of Special Services.

19. *Notice of Award*—The written notice, by Buyer to a Bidder, of Buyer's acceptance of the Bid.

20. *Point of Destination*—The specific address of the location where delivery of the Goods will be made, as stated in the Procurement Agreement.

21. *Procurement Agreement*—The written instrument, executed by Buyer and Seller, that sets forth the Procurement Contract Price and Procurement Contract Times, identifies the parties and the Engineer, and designates the specific items that are Procurement Contract Documents.

22. *Procurement Bidding Documents*—The Procurement Bidding Requirements and the proposed Procurement Contract Documents (including all Addenda).

23. *Procurement Bidding Requirements*—The advertisement or invitation to bid, Instructions to Bidders, Bid security of acceptable form, if any, and Bid Form with any supplements.

24. *Procurement Contract*—The entire and integrated written agreement between Buyer and Seller concerning the Goods and Special Services.

Copyright© 2019 National Society of Professional Engineers, American Council of Engineering Companies, and American Society of Civil Engineers. All rights reserved.

25. *Procurement Contract Documents*—Those items so designated in the Procurement Agreement, and which together comprise the Procurement Contract. Shop Drawings and other Seller submittals are not Procurement Contract Documents, even if accepted, reviewed, or approved by Engineer or Buyer.

26. *Procurement Contract Price*—The money that Buyer has agreed to pay Seller for furnishing the Goods and Special Services in accordance with the Procurement Contract Documents.

27. *Procurement Contract Times*—The times stated in the Procurement Agreement by which the Goods must be delivered, Special Services must be furnished, and other Milestones must be attained.

28. *Procurement Drawings*—That part of the Procurement Contract Documents prepared or approved by Engineer which graphically shows the scope, extent, and character of the Goods and Special Services to be furnished by Seller. Shop Drawings and other Seller submittals are not Procurement Drawings as so defined.

29. *Procurement Specifications*—That part of the Procurement Contract Documents consisting of written requirements for materials, equipment, systems, standards and workmanship as applied to the furnishing of the Goods and Special Services, and certain administrative requirements and procedural matters applicable thereto.

30. *Project*—The total undertaking to be accomplished for Project Owner by engineers, contractors, and others, including planning, study, design, construction, testing, commissioning, and start-up, and of which the Goods and Special Services are a part.

31. *Project Owner*—The entity that has retained (or will retain) engineers, contractors, and others for the planning, study, design, construction, testing, commissioning, and start-up of facilities and improvements. As of the Effective Date of the Procurement Contract, the Project Owner is the Buyer.

32. *Samples*—Physical examples of materials, equipment, or workmanship that are representative of some portion of the Goods and Special Services and which establish the standards by which such portion of the Goods and Special Services will be judged.

33. *Schedule of Submittals*—A schedule, prepared and maintained by Seller, of required Submittals and the time requirements for Engineer's review of the Submittals.

34. *Seller*—The individual or entity furnishing the Goods and Special Services.

35. *Shop Drawings*—All drawings, diagrams, illustrations, schedules, and other data or information which are specifically prepared or assembled by or for Seller and submitted by Seller to illustrate some portion of the Goods and Special Services. Shop Drawings, whether approved or not, are not Procurement Drawings and are not Procurement Contract Documents.

36. *Special Services*—Services to be performed by Seller (or its agents or subcontractors) in association with the Goods to be furnished by Seller, as required by the Procurement Contract Documents.

37. *Submittal*—A written or graphic document, prepared by or for Seller, which the Procurement Contract Documents require Seller to submit to Engineer, or that is indicated as a Submittal in the Schedule of Submittals accepted by Engineer. Submittals

Copyright© 2019 National Society of Professional Engineers, American Council of Engineering Companies, and American Society of Civil Engineers. All rights reserved.

may include Shop Drawings and Samples; schedules; product data; sustainable design information; information on special procedures; testing plans; results of tests and evaluations, source quality-control testing and inspections, and field or site quality-control testing and inspections; warranties and certifications; suppliers' instructions and reports; records of delivery of spare parts and tools; operations and maintenance data; record documents; and other such documents required by the Procurement Contract Documents. Submittals, whether or not approved or accepted by Engineer, are not Procurement Contract Documents. Change proposals, Change Orders, Claims, notices, Applications for Payment, and requests for interpretation or clarification are not Submittals.

38. *Successful Bidder*—The Bidder whose Bid the Buyer accepts, and to which Buyer makes an award of the Procurement Contract.

39. *Supplementary Conditions*—The part of the Procurement Contract that amends or supplements these General Conditions.

40. *Unit Price Goods and Special Services*—Goods and Special Services to be paid for on the basis of unit prices (if any).

1.02 *Terminology*

A. The words and terms discussed in Paragraphs 1.02.B and 1.02.C are not defined, but have the indicated meanings when used in the Bidding Requirements or Procurement Contract Documents.

B. *Intent of Certain Terms or Adjectives*

1. The Procurement Contract Documents include the terms "as allowed," "as approved," "as ordered," "as directed" or terms of like effect or import to authorize an exercise of professional judgment by Engineer. In addition, the adjectives "reasonable," "suitable," "acceptable," "proper," "satisfactory," or adjectives of like effect or import are used to describe an action or determination of Engineer as to the Goods and Special Services. It is intended that such exercise of professional judgment, action, or determination will be commercially reasonable and will be solely to evaluate, in general, the Goods and Special Services for compliance with the requirements of and information in the Procurement Contract Documents and conformance with the design concept of the completed Project as a functioning whole, as shown or indicated in the Procurement Contract Documents (unless there is a specific statement indicating otherwise). The use of any such term or adjective will not be effective to assign to Engineer any duty or authority to supervise or direct the furnishing of Goods or Special Services or any duty or authority to undertake responsibility contrary to any other provision of the Procurement Contract Documents.

2. The word "non-conforming" when modifying the words "Goods and Special Services," "Goods," or "Special Services," refers to Goods and Special Services that are unsatisfactory, faulty, or deficient in that they:

a. do not conform to or comply with the requirements of the Procurement Contract Documents;

b. do not meet the requirements of any applicable inspection, reference standard, test, or approval referred to in the Procurement Contract Documents; or

Copyright© 2019 National Society of Professional Engineers, American Council of Engineering Companies, and American Society of Civil Engineers. All rights reserved.

c. in the case of Special Services, have not been completed.

3. The word “receipt” when referring to the Goods, means the physical taking and possession by the Buyer under the conditions specified in Paragraph 9.02.B.2.

4. The word “day” means a calendar day of 24 hours measured from midnight to the next midnight.

5. The word "furnish," when used in connection with the Goods and Special Services means to supply and deliver said Goods to the Point of Destination (or some other specified location) and to perform said Special Services fully, all in accordance with the Procurement Contract Documents.

C. *Procurement Contract Price or Procurement Contract Times*: References to a change in “Procurement Contract Price or Procurement Contract Times” or “Procurement Contract Times or Procurement Contract Price” or similar, indicate that such change applies to (1) Procurement Contract Price, (2) Procurement Contract Times, or (3) both Procurement Contract Price and Procurement Contract Times, as warranted, even if the term “or both” is not expressed.

D. Unless stated otherwise in the Procurement Contract Documents, words or phrases that have a well-known technical or construction industry or trade meaning are used in the Procurement Contract Documents in accordance with such recognized meaning.

ARTICLE 2—PRELIMINARY MATTERS

2.01 *Delivery of Bonds and Evidence of Insurance*

A. When Seller delivers the executed counterparts of the Procurement Agreement to Buyer, the Seller also shall deliver to Buyer the performance bond and payment bond (if the Procurement Contract requires Seller to furnish such bonds).

B. *Evidence of Seller’s Insurance*: When Seller delivers the signed counterparts of the Procurement Agreement to Buyer, the Seller also shall deliver to Buyer, with copies to each additional insured (as identified in the Procurement Contract), the certificates, endorsements, and other evidence of insurance required to be provided by Seller in accordance with Article 5. Evidence of insurance to be obtained at a later date, such as insurance relating to transit or storage of the Goods, will be provided to Buyer at the time of such insurance is obtained.

C. *Evidence of Buyer’s Insurance*: After receipt of the signed counterparts of the Procurement Agreement and all required bonds and insurance documentation, Buyer shall promptly deliver to Seller, with copies to each additional insured (as identified in the Procurement Contract), certificates and other evidence of insurance (if any) required to be provided by Buyer.

2.02 *Copies of Documents*

A. Buyer shall furnish to Seller four printed copies of the Procurement Contract (including one fully executed counterpart of the Procurement Agreement), and one copy in electronic portable document format (PDF). Additional printed copies will be furnished upon request at the cost of reproduction.

Copyright© 2019 National Society of Professional Engineers, American Council of Engineering Companies, and American Society of Civil Engineers. All rights reserved.

2.03 *Electronic Transmittals*

A. Except as otherwise stated elsewhere in the Procurement Contract, the Buyer, Seller, and Engineer may send, and shall accept, Electronic Documents transmitted by Electronic Means.

B. If the Procurement Contract does not establish protocols for Electronic Means, then Buyer, Seller, and Engineer shall jointly develop such protocols.

C. Subject to any governing protocols for Electronic Means, when transmitting Electronic Documents by Electronic Means, the transmitting party makes no representations as to long-term compatibility, usability, or readability of the Electronic Documents resulting from the recipient's use of software application packages, operating systems, or computer hardware differing from those used in the drafting or transmittal of the Electronic Documents.

2.04 *Preliminary Schedules*

A. Within 15 days after the Effective Date of the Procurement Contract, Seller shall submit to Buyer and Engineer for timely review:

1. a progress schedule of activities, consistent with the Procurement Contract Times, including at a minimum, Shop Drawing and Sample submittals, tests, and deliveries as required by the Procurement Contract Documents.

a. The progress schedule will be acceptable to Buyer and Engineer if it provides an orderly progression of the Submittals, tests, and deliveries to completion within the specified Milestones of the Procurement Contract Times.

b. Such acceptance will not impose on Buyer or Engineer responsibility for the progress schedule, for sequencing, scheduling, or progress of Seller's performance of its obligations under the Procurement Contract, nor interfere with or relieve Seller from Seller's full responsibility therefor.

c. Such acceptance will not be deemed as an acknowledgment of the reasonableness and attainability of the schedule.

2. a preliminary schedule of Submittals.

B. No progress payment will be made to Seller until an acceptable progress schedule and acceptable schedule of Submittals are submitted to Buyer and Engineer (and other conditions applicable to progress payments are met).

2.05 *Preliminary Conference*

A. Within 20 days after the Procurement Contract Times start to run, a conference attended by Seller, Buyer, Engineer and others as appropriate will be held to establish a working understanding among the parties as to the Goods and Special Services and to discuss the schedules referred to in Paragraph 2.04.A, procedures for handling Shop Drawings and other Submittals, processing Applications for Payment, and maintaining required records.

2.06 *Safety*

A. Buyer and Seller shall comply with all applicable Laws and Regulations relating to the safety of persons or property, and to the protection of persons or property from damage, injury, or loss.

Copyright© 2019 National Society of Professional Engineers, American Council of Engineering Companies, and American Society of Civil Engineers. All rights reserved.

B. When Seller's personnel, or the personnel of any subcontractor to Seller, are present at the Point of Destination or any work area or site controlled by Buyer, the Seller shall be responsible for the compliance by such personnel with any applicable requirements of Buyer's safety programs that are made known to Seller.

C. If Buyer or its representatives visit the Seller's manufacturing or storage facilities, for testing, inspection, or other purposes, Seller shall inform Buyer in advance of any safety preparations, standards, or programs with which Buyer and its representatives must comply.

ARTICLE 3—PROCUREMENT CONTRACT DOCUMENTS

3.01 *Intent*

A. The Procurement Contract Documents are complementary; what is called for by one is as binding as if called for by all.

B. Any labor, documentation, services, materials, or equipment that may reasonably be inferred from the Procurement Contract Documents or from prevailing custom or trade usage as being required to produce or furnish the indicated Goods and Special Services will be provided, whether or not specifically called for, at no additional cost to Buyer.

C. Unless otherwise stated in the Procurement Contract Documents, if there is a discrepancy between the electronic or digital versions of the Procurement Contract Documents (including any printed copies derived from such electronic or digital versions) and the printed record version, the printed record version will govern.

D. The Procurement Contract supersedes prior negotiations, representations, and agreements, whether written or oral.

E. Engineer will issue clarifications and interpretations of the Procurement Contract Documents, as provided in Paragraph 3.04.

F. Any provision or part of the Procurement Contract Documents held to be void or unenforceable under any Law or Regulation will be deemed stricken, and all remaining provisions will continue to be valid and binding upon Buyer and Seller.

3.02 *Reference Standards*

A. Reference to standards, specifications, manuals, or codes of any technical society, organization, or association, or to Laws and Regulations, whether such reference be specific or by implication, means the standard, specification, manual, code, or Laws and Regulations in effect at the time of opening of Bids (or on the Effective Date of the Procurement Agreement if there were no Bids), except as may be otherwise specifically stated in the Procurement Contract Documents.

B. No provision of any such standard specification, manual, reference standard, or code, and no instruction of a supplier, will be effective to change the duties or responsibilities of Buyer, Seller, or Engineer from those set forth in the part of the Procurement Contract Documents prepared by or for Engineer. No such provision or instruction will be effective to assign to Buyer or Engineer any duty or authority to supervise or direct the performance of Seller's obligations, or any duty or authority to undertake responsibility inconsistent with the provisions of the part of the Procurement Contract Documents prepared by or for Engineer.

Copyright© 2019 National Society of Professional Engineers, American Council of Engineering Companies, and American Society of Civil Engineers. All rights reserved.

C. Compliance with Laws and Permits. All permits and licenses which are required to construct, install and/or operate Buyer's facility or equipment, to use the Equipment, or to manage and dispose of any wastes and residues resulting from Buyer's use of the Equipment, shall be obtained and maintained by Buyer at Buyer's sole expense. Buyer is responsible for compliance with all laws and regulations applicable to the storage, use, handling, installation, maintenance, removal, registration and labeling of all Equipment after delivery of the Equipment, as well as for the proper management and disposal of all wastes and residues.

3.03 *Reporting and Resolving Discrepancies*

A. *Reporting Discrepancies*

1. *Seller's Review of Procurement Contract Documents*: If, before or during the performance of Seller's obligations, Seller discovers any conflict, error, ambiguity, or discrepancy within the Procurement Contract Documents, or between the Procurement Contract Documents and (a) any applicable Law or Regulation, (b) actual field conditions, (c) any standard specification, manual, reference standard, or code, or (d) any instruction of any supplier to Seller, then Seller shall promptly report it to Engineer (or if the Procurement Contract is assigned, then directly to Contractor/Assignee) in writing. Seller shall not proceed with the Goods and Special Services affected thereby until the conflict, error, ambiguity, or discrepancy is resolved, by a clarification or interpretation by Engineer (or if the Procurement Contract is assigned, then by Contractor/Assignee) or by an amendment or supplement to the Procurement Contract Documents issued pursuant to Article 11.

2. Seller shall not be liable to Buyer or Engineer for failure to report any conflict, error, ambiguity, or discrepancy in the Procurement Contract Documents unless Seller had actual knowledge thereof.

B. *Resolving Discrepancies*: Except as may be otherwise specifically stated in the Procurement Contract Documents, the provisions of the Procurement Contract Documents will take precedence in resolving any conflict, error, ambiguity, or discrepancy between the provisions of the Procurement Contract Documents and:

1. the provisions of any standard, specification, manual, code, or instruction (whether or not specifically incorporated by reference in the Procurement Contract Documents); or

2. the provisions of any Laws or Regulations applicable to the furnishing of the Goods and Special Services (unless such an interpretation of the provisions of the Procurement Contract Documents would result in violation of such Law or Regulation).

3.04 *Requirements of the Procurement Drawings and Procurement Specifications*

A. During the performance of Seller's obligations and until final payment, Seller and Buyer shall submit to the Engineer all matters in question concerning the requirements of the Procurement Drawings and Procurement Specifications (sometimes referred to as requests for information or interpretation—RFIs), or relating to the acceptability of the Goods and Special Services, as soon as possible after such matters arise. Engineer will be the initial interpreter of the requirements of the Procurement Drawings and Procurement Specifications, and judge of the acceptability of the Goods and Special Services thereunder.

Copyright© 2019 National Society of Professional Engineers, American Council of Engineering Companies, and American Society of Civil Engineers. All rights reserved.

1. After assignment (if any) Seller shall submit such matters directly to Contractor/Assignee for response or administration, and the Procurement Contract provisions in Paragraphs 3.04.B and C will not apply.

B. Engineer will issue with reasonable promptness a written clarification, interpretation, or decision on the issue submitted, and if necessary, initiate an amendment or supplement to the Procurement Drawings or Procurement Specifications. Engineer's written clarification, interpretation, or decision will be consistent with the overall intent of the Procurement Contract Documents, and will be final and binding on Seller and Buyer. If either Buyer or Seller believes that a written clarification or interpretation justifies an adjustment in the Procurement Contract Price or Procurement Contract Times, either may make a Claim for such adjustment as provided in Article 12.

C. If a submitted matter in question concerns terms and conditions of the Procurement Contract Documents that do not involve (1) the performance or acceptability of the Goods and Services, (2) the design (as set forth in the Procurement Drawings, Procurement Specifications, or otherwise), or (3) other engineering or technical matters, then Engineer will promptly give written notice to Buyer and Seller that Engineer is unable to provide a decision or interpretation.

3.05 *Reuse of Documents*

A. Seller and its subcontractors and suppliers shall not:

1. have or acquire any title to or ownership rights in any of the Procurement Drawings, Procurement Specifications, or other documents (or copies of any thereof) prepared by or bearing the seal of Engineer or its consultants, including electronic media editions, or reuse any such Procurement Drawings, Procurement Specifications, other documents, or copies thereof, on extensions of the Project or any other project, without written consent of Buyer and Engineer and specific written verification or adaptation by Engineer; or

2. have or acquire any title or ownership rights in any other Procurement Contract Documents, reuse any such Procurement Contract Documents for any purpose without Buyer's express written consent, or violate any copyrights pertaining to such Procurement Contract Documents.

B. The prohibitions of this Paragraph 3.05 will survive final payment, or termination of the Procurement Contract. Nothing herein precludes Seller from retaining copies of the Procurement Contract Documents for record purposes.

ARTICLE 4—COMMENCEMENT AND SCHEDULE

4.01 *Commencement of Procurement Contract Times*

A. The Procurement Contract Times will commence to run on the Effective Date of the Procurement Contract.

4.02 *Continuing Performance*

A. Seller shall adhere to the progress schedule established in accordance with Paragraph 2.04.A., as duly adjusted, and the Goods will be delivered and the Special Services furnished within the Procurement Contract Times.

Copyright© 2019 National Society of Professional Engineers, American Council of Engineering Companies, and American Society of Civil Engineers. All rights reserved.

B. Seller shall carry on furnishing of the Goods and Special Services and adhere to the progress schedule during all disputes or disagreements with Buyer. No furnishing of Goods and Special Services will be delayed or postponed pending resolution of any disputes or disagreements, except as expressly permitted herein, or as Buyer and Seller may otherwise agree in writing.

4.03 *Adjustments to Progress Schedule*

A. The progress schedule established in accordance with Paragraph 2.04 may be adjusted from time to time as provided below.

1. Seller shall submit to Buyer for acceptance (to the extent indicated in Paragraph 2.04) proposed adjustments in the progress schedule that will not result in changing the Procurement Contract Times. Such adjustments will comply with any applicable provisions of the Procurement Specifications.

2. Proposed adjustments in the progress schedule that will change the Procurement Contract Times must be submitted in accordance with the requirements of Article 11. Adjustments in Procurement Contract Times may only be made by a Change Order.

4.04 *Delays*

A. If Buyer, Engineer, or anyone for whom Buyer is responsible, delays, disrupts, or interferes with Seller's performance or progress, then Seller shall be entitled to an equitable adjustment in Procurement Contract Price or Procurement Contract Times.

B. Seller shall not be entitled to an adjustment in Procurement Contract Price or Procurement Contract Times for delay, disruption, or interference caused by or within the control of Seller or anyone for whom Seller is responsible.

C. If Seller's performance or progress is delayed, disrupted, or interfered with by unanticipated causes not the fault of and beyond the control of Buyer, Seller, and those for which they are responsible, then Seller shall be entitled to an equitable adjustment in Procurement Contract Times. Such an adjustment will be Seller's sole and exclusive remedy for the delays, disruption, and interference described in this paragraph. Causes of delay, disruption, or interference that may give rise to an adjustment in Procurement Contract Times under this paragraph include but are not limited to the following:

1. severe and unavoidable natural catastrophes such as fires, floods, epidemics, and earthquakes;

2. abnormal weather conditions;

3. inspection delays by governmental authorities, and custom delays;

4. international shipping delays;

5. acts or failures to act of third-party entities; and

6. acts of war or terrorism.

D. *Adjustments of Procurement Contract Times or Procurement Contract Price—General Provisions*: Seller's entitlement to an adjustment of Procurement Contract Times or Procurement Contract Price is limited as follows:

1. Seller's entitlement to an adjustment of the Procurement Contract Times is conditioned on the delay, disruption, or interference adversely affecting an activity on the critical

Copyright© 2019 National Society of Professional Engineers, American Council of Engineering Companies, and American Society of Civil Engineers. All rights reserved.

path to completion of Seller's obligations, as of the time of the delay, disruption, or interference.

2. Seller shall not be entitled to an adjustment in Procurement Contract Price for any delay, disruption, or interference if such delay is concurrent with a delay, disruption, or interference caused by or within the control of Seller. Such a concurrent delay by Seller does not preclude an adjustment of Procurement Contract Times to which Seller is otherwise entitled.

3. Adjustments of Procurement Contract Times or Procurement Contract Price are subject to the provisions of Articles 11 and 12.

E. Each Seller request seeking a delay-related increase in Procurement Contract Times or Procurement Contract Price must be supplemented by supporting data that sets forth in detail the following: (1) the circumstances that form the basis for the requested adjustment; (2) the date upon which each cause of delay, disruption, or interference began to affect Seller's progress; (3) the date upon which each cause of delay, disruption, or interference ceased to affect Seller's progress; (4) the number of days' increase in Procurement Contract Times claimed as a consequence of each such cause of delay, disruption, or interference; and (5) the impact on Procurement Contract Price. Seller shall also furnish such additional supporting documentation as Buyer or Engineer may require including, where appropriate, a revised progress schedule indicating all the activities affected by the delay, disruption, or interference, and an explanation of the effect of the delay, disruption, or interference on the critical path to completion.

ARTICLE 5—BONDS AND INSURANCE

5.01 *Performance, Payment, and Other Bonds*

A. Seller shall furnish a performance bond and a payment bond, each in an amount at least equal to the Procurement Contract Price, as security for the faithful performance and payment of Seller's obligations under the Procurement Contract. These bonds must remain in effect until one year after the date when final payment becomes due or until completion of the correction period specified in Paragraph 9.04, whichever is later, except as provided otherwise by Laws or Regulations, the terms of a prescribed bond form, the Supplementary Conditions, or other provisions of the Procurement Contract.

B. Seller shall also furnish such other bonds (if any) as are required by the Supplementary Conditions or other provisions of the Procurement Contract.

C. All bonds must be in the form included in the Bidding Documents or otherwise specified by Buyer prior to execution of the Procurement Contract, except as provided otherwise by Laws or Regulations, and must be issued and signed by a surety named in "Companies Holding Certificates of Authority as Acceptable Sureties on Federal Bonds and as Acceptable Reinsuring Companies" as published in Department Circular 570 (as amended and supplemented) by the Bureau of the Fiscal Service, U.S. Department of the Treasury. A bond signed by an agent or attorney-in-fact must be accompanied by a certified copy of that individual's authority to bind the surety. The evidence of authority must show that it is effective on the date the agent or attorney-in-fact signed the accompanying bond.

Copyright© 2019 National Society of Professional Engineers, American Council of Engineering Companies, and American Society of Civil Engineers. All rights reserved.

D. Seller shall obtain the required bonds from surety companies that are duly licensed or authorized, in the state or jurisdiction in which the Project is located, to issue bonds in the required amounts.

E. If the surety on a bond furnished by Seller is declared bankrupt or becomes insolvent, or the surety ceases to meet the requirements above, then Seller shall promptly notify Buyer and Engineer and shall, within 20 days after the event giving rise to such notification, provide another bond and surety, both of which shall comply with the bond and surety requirements of this Procurement Contract.

F. If Seller has failed to obtain a required bond, Buyer may exercise Buyer's termination rights under Article 14.

G. Upon request to Buyer from any subcontractor, supplier, or other person or entity claiming to have furnished labor, services, materials, or equipment used in the performance of Seller's obligations, Buyer shall provide a copy of the payment bond to such person or entity.

H. Upon request to Seller from any subcontractor, supplier, or other person or entity claiming to have furnished labor, services, materials, or equipment used in the performance of Seller's obligations, Seller shall provide a copy of the payment bond to such person or entity.

5.02 *Insurance*

A. Seller shall provide insurance of the types and coverages and in the amounts stipulated in the Supplementary Conditions.

B. Failure of Buyer to demand certificates of insurance or other evidence of Seller's full compliance with these insurance requirements or failure of Buyer to identify a deficiency in compliance from the evidence provided will not be construed as a waiver of Seller's obligation to maintain such insurance.

C. Upon assignment of this Procurement Contract, Seller shall name the Contractor/Assignee as an additional insured and comply with the written request of Contractor/Assignee to provide evidence of insurance.

D. Buyer does not represent that insurance coverage and limits established in this Procurement Contract necessarily will be adequate to protect Seller.

E. The insurance and insurance limits required herein will not be deemed as a limitation on Seller's liability under the indemnities and other rights granted to Buyer in the Procurement Contract.

5.03 *Surety or Insurance Companies*

A. All bonds and insurance required by the Procurement Contract Documents to be purchased and maintained by Buyer or Seller shall be obtained from surety or insurance companies that are duly licensed or authorized in the jurisdiction in which the Project is located to issue bonds or insurance policies for the limits and coverages so required. Such surety and insurance companies must also meet such additional requirements and qualifications as may be provided in the Supplementary Conditions.

Copyright© 2019 National Society of Professional Engineers, American Council of Engineering Companies, and American Society of Civil Engineers. All rights reserved.

ARTICLE 6—LICENSES AND FEES

6.01 *Intellectual Property and License Fees*

A. Except to the extent stated elsewhere in the Procurement Contract Documents, Seller is not transferring any patent rights, copyrights, or other intellectual property rights for the Goods delivered.

B. To the extent Seller is manufacturing to Buyer's design, Buyer retains all patent rights, copyrights, and other intellectual property rights in such design.

C. If an invention, design, process, product, or device is specified in the Procurement Contract Documents for incorporation in the Goods or for the performance of Special Services, and if, to the actual knowledge of Buyer or Engineer, its use is subject to patent rights, copyrights, or other intellectual property rights calling for the payment of a license fee or royalty to others, then the existence of such rights and payment obligations will be disclosed to Seller in the Procurement Contract Documents.

D. Seller shall pay all license fees and royalties and assume all costs incident to the use or the furnishing of the Goods, unless specified otherwise by the Procurement Contract Documents.

6.02 *Seller's Infringement*

A. Subject to Paragraph 6.01, to the fullest extent permitted by Laws and Regulations, Seller shall indemnify and hold harmless Buyer, Engineer, and their officers, directors, members, partners, employees, agents, consultants, contractors, and subcontractors, from and against all claims, costs, losses, damages, and judgments (including but not limited to all reasonable fees and charges of engineers, architects, attorneys and other professionals and all court or arbitration or other dispute resolution costs) arising out of or relating to any infringement or alleged infringement of any patent, copyright, or other intellectual property right by any of the Goods as delivered or Special Services as performed.

B. Buyer will promptly notify Seller in writing of any claim, suit, or threat of suit by a third party for any infringement or alleged infringement of any patent, copyright, or other intellectual property right with respect to the Goods as delivered or Special Services as performed.

C. Seller shall promptly defend or settle the claim or suit. Seller shall have control over such claim or suit, bear all expenses, and satisfy any adverse judgment.

1. If Seller fails to defend such suit or claim after written notice by Buyer, Seller will be bound, in any subsequent suit or claim against Seller by Buyer, by any factual determination in the prior suit or claim.

2. If Buyer fails to provide Seller the opportunity to defend such suit or claim, Buyer shall be barred from any remedy against Seller for such suit or claim.

D. If a determination is made that Seller has infringed upon the intellectual property rights of another, Seller may, at Seller's own expense, obtain the necessary licenses for Buyer's benefit, or replace the Goods and provide related design and construction, consistent with the requirements of the Procurement Contract Documents, to avoid the infringement.

Copyright© 2019 National Society of Professional Engineers, American Council of Engineering Companies, and American Society of Civil Engineers. All rights reserved.

6.03 *Buyer's Infringement*

A. Subject to Paragraph 6.01, and to the fullest extent permitted by Laws and Regulations, Buyer shall be responsible to Seller for any infringement or alleged infringement of any patent, copyright, or other intellectual property right caused by Seller's compliance with the Procurement Drawings or Procurement Specifications, and will reimburse Seller for any license fee or royalties paid by Seller to others if such payment resulted from any invention, design, process, product, or device specified to be furnished or performed in the Procurement Drawings or Procurement Specifications, but not identified as being subject to payment of such license fee or royalty.

B. Seller will promptly notify Buyer in writing of any claim, suit, or threat of suit by a third party for intellectual property infringement arising from Seller's compliance with the Procurement Drawings or Procurement Specifications.

C. Buyer shall defend or settle the claim or suit. Buyer shall have control over such claim or suit, bear all expenses, and satisfy any adverse judgment.

1. If Buyer fails to defend such suit or claim after written notice by Seller, Buyer will be bound, in any subsequent suit or claim against Buyer by Seller, by any factual determination in the prior suit or claim.

2. If Seller fails to provide Buyer the opportunity to defend such suit or claim, Seller shall be barred from any remedy against Buyer for such suit or claim.

ARTICLE 7—SELLER'S RESPONSIBILITIES

7.01 *Performance of Obligations*

A. Seller shall be solely responsible for the means, methods, techniques, sequences, and procedures necessary to perform its obligations in accordance with the Procurement Contract Documents.

B. Seller shall supervise, inspect, and direct the furnishing of the Goods and Special Services competently and efficiently, devoting such attention thereto and applying such skills and expertise as may be necessary to perform its obligations in accordance with the Procurement Contract Documents.

C. Seller shall coordinate the provision of Special Services to avoid or limit interference or disruption of other activities at the location where the Special Services are to occur, including but not limited to ongoing facility operations and construction activities.

7.02 *Labor, Materials and Equipment*

A. Seller shall provide competent, qualified and trained personnel in all aspects of its performance of the Procurement Contract.

B. All Goods, and all equipment and material incorporated into the Goods, must be as specified, and unless specified otherwise in the Procurement Contract Documents, must be:

1. new, and of good quality;

2. protected, assembled, connected, cleaned, and conditioned in accordance with the original manufacturer's instructions; and

Copyright© 2019 National Society of Professional Engineers, American Council of Engineering Companies, and American Society of Civil Engineers. All rights reserved.

3. shop-assembled to the greatest extent practicable.

7.03 *Laws and Regulations*

A. Seller shall give all notices required by and shall comply with all Laws and Regulations applicable to the performance of its obligations in accordance with the Procurement Contract Documents. Except where otherwise expressly required by such Laws and Regulations, neither Buyer nor Engineer shall be responsible for monitoring Seller's compliance with any Laws or Regulations.

B. If Seller furnishes Goods and Special Services knowing or having reason to know that such furnishing is contrary to Laws or Regulations, Seller shall bear all claims, costs, losses, and damages (including but not limited to all fees and charges of engineers, architects, attorneys, and other professionals and all court or arbitration or other dispute resolution costs) arising out of or relating to such performance. It will not be Seller's responsibility to make certain that the Procurement Specifications and Procurement Drawings are in accordance with Laws and Regulations, but this provision will not relieve Seller of Seller's obligations under Paragraph 3.03.

C. Changes in Laws or Regulations not known at the time of opening of Bids (or, on the Effective Date of the Procurement Contract if there were no Bids) that have a direct effect on the cost or time of Seller's performance will be the subject of an adjustment in Procurement Contract Price or Procurement Contract Times. If Buyer and Seller are unable to agree on entitlement to or on the amount or extent, if any, of any such adjustment, a Claim may be made therefor as provided in Article 12.

7.04 *"Or Equals"*

A. Whenever an item of material or equipment to be incorporated into the Goods is specified or described in the Procurement Contract Documents by using the names of one or more proprietary items or specific suppliers or manufacturers, the specification or description is intended to establish the type, function, appearance, and quality required. Unless the specification or description contains or is followed by words reading that no like, equivalent, or "or equal" item is permitted, other items of material or equipment or material or equipment of other suppliers or manufacturers may be submitted to Buyer for Engineer's review.

1. If in Engineer's sole discretion, such an item of material or equipment proposed by Seller is functionally equal to that named and sufficiently similar so that no change in related work will be required, it may be considered by Engineer as an "or equal" item.

2. For the purposes of this paragraph, a proposed item of material or equipment may be considered functionally equal to an item so named only if in the exercise of reasonable judgment, Engineer determines that: 1) it is at least equal in quality, durability, appearance, strength, and design characteristics; 2) it will reliably perform at least equally well the function imposed by the design concept of the completed Project as a functioning whole; 3) it has an acceptable record of performance and availability of responsive service; and (4) Seller certifies that if approved: a) there will be no increase in any cost, including capital, installation or operating costs, to Buyer; and b) the proposed item will conform substantially to the detailed requirements of the item named in the Procurement Contract Documents.

Copyright© 2019 National Society of Professional Engineers, American Council of Engineering Companies, and American Society of Civil Engineers. All rights reserved.

B. *Engineer's Evaluation*: Engineer will be allowed a reasonable time within which to evaluate each proposal or Submittal made pursuant to Paragraph 7.04.A. Engineer will be the sole judge of whether to accept or reject such a proposal or Submittal. No "or equal" will be ordered, manufactured or utilized until Engineer's review is complete, which will be evidenced by an approved Shop Drawing. Engineer will advise Buyer and Seller in writing of any negative determination. Notwithstanding Engineer's approval of an "or-equal" item, Seller shall remain obligated to comply with the requirements of the Procurement Contract Documents.

C. *Special Guarantee*: Buyer may require Seller to furnish at Seller's expense a special performance guarantee or other surety with respect to any such proposed "or-equal."

D. *Data*: Seller shall provide all data in support of any such proposed "or equal" at Seller's expense.

7.05 *Taxes*

A. Seller shall pay all taxes and duties arising out of the sale of the Goods and the performance of Special Services. All taxes and duties are included in the Procurement Contract Price, except as noted in the Supplementary Conditions.

7.06 *Submittals*

A. *Shop Drawing and Sample Requirements*

1. Before submitting a Shop Drawing or Sample, Seller shall:

a. review and coordinate the Shop Drawing or Sample with other Shop Drawings and Samples and with the requirements of the Procurement Contract Documents;

b. determine and verify:

1) all field measurements, quantities, dimensions, specified performance and design criteria, installation requirements, materials, catalog numbers, and similar information with respect to the Submittal; and

2) the suitability of all materials and equipment offered with respect to the indicated application, fabrication, shipping, handling, storage, assembly, and installation pertaining to the performance of Seller's obligations.

c. confirm that the Submittal is complete with respect to all related data included in the Submittal.

2. Each Shop Drawing or Sample must bear a stamp or specific written certification that Seller has satisfied its obligations under the Procurement Contract Documents with respect to Seller's review of that Submittal, and that Seller approves the Submittal.

3. With each Shop Drawing or Sample, Seller shall give Engineer specific written notice of any variations that the Submittal may have from the requirements of the Procurement Contract Documents. This notice will be set forth in a written communication separate from the Submittal; and, in addition, in the case of a Shop Drawing by a specific notation made on the Shop Drawing itself.

B. *Submittal Procedures for Shop Drawings and Samples*: Seller shall label and submit Shop Drawings and Samples to Engineer for review and approval in accordance with the accepted Schedule of Submittals.

Copyright© 2019 National Society of Professional Engineers, American Council of Engineering Companies, and American Society of Civil Engineers. All rights reserved.

1. *Shop Drawings*

    a. Seller shall submit the number of copies required in the Procurement Specifications.

    b. Data shown on the Shop Drawings must be complete with respect to quantities, dimensions, specified performance and design criteria, materials, and similar data to show Engineer the services, materials, and equipment Seller proposes to provide, and to enable Engineer to review the information for the limited purposes required by Paragraph 7.06.C.

2. *Samples*

    a. Seller shall submit the number of Samples required in the Procurement Specifications.

    b. Seller shall clearly identify each Sample as to material, supplier, pertinent data such as catalog numbers, the use for which intended and other data as Engineer may require to enable Engineer to review the Submittal for the limited purposes required by Paragraph 7.06.C.

3. Where a Shop Drawing or Sample is required by the Procurement Contract Documents or the Schedule of Submittals, any related work performed by Seller prior to Engineer's review and approval of the pertinent Submittal will be at the sole expense and responsibility of Seller.

C. *Engineer's Review of Shop Drawings and Samples*

1. Engineer will provide timely review of Shop Drawings and Samples in accordance with the accepted Schedule of Submittals. Engineer's review and approval will be only to determine if the items covered by the Submittals will, after installation or incorporation in the Goods, comply with the requirements of the Procurement Contract Documents, and be compatible with the design concept of the completed Project as a functioning whole as indicated by the Procurement Contract Documents.

2. Engineer's review and approval will not extend to means, methods, techniques, sequences, or procedures of construction, manufacturing, fabrication, installation, or shipping, or to safety precautions or programs incident thereto.

3. Engineer's review and approval of a separate item as such will not indicate approval of the assembly in which the item functions.

4. Engineer's review and approval of a Shop Drawing or Sample will not relieve Seller from responsibility for any variation from the requirements of the Procurement Contract Documents unless Seller has complied with the requirements of Paragraph 7.06.A.3 and Engineer has given written approval of each such variation by specific written notation thereof incorporated in or accompanying the Shop Drawing or Sample. Engineer will document any such approved variation from the requirements of the Procurement Contract Documents in a Field Order or other appropriate Procurement Contract modification.

5. Engineer's review and approval of a Shop Drawing or Sample will not relieve Seller from responsibility for complying with the requirements of Paragraphs 7.06.A and B.

Copyright© 2019 National Society of Professional Engineers, American Council of Engineering Companies, and American Society of Civil Engineers. All rights reserved.

6. Engineer's review and approval of a Shop Drawing or Sample, or of a variation from the requirements of the Procurement Contract Documents, will not, under any circumstances, change the Procurement Contract Times or Procurement Contract Price, unless such changes are included in a Change Order.

7. Neither Engineer's receipt, review, acceptance or approval of a Shop Drawing or Sample will result in such item becoming a Procurement Contract Document.

8. Seller shall furnish Goods that comply with the requirements and commitments set forth in approved Shop Drawings and Samples, subject to the provisions of Paragraph 7.06.C.4.

D. *Resubmittal Procedures for Shop Drawings and Samples*

1. Seller shall make corrections required by Engineer and shall return the required number of corrected copies of Shop Drawings and submit, as required, new Samples for review and approval. Seller shall direct specific attention in writing to revisions other than the corrections called for by Engineer on previous Submittals.

2. Seller shall furnish required Shop Drawing and Sample Submittals with sufficient information and accuracy to obtain required approval of an item with no more than two resubmittals. Engineer will record Engineer's time for reviewing a third or subsequent resubmittal of a Shop Drawing or Sample, and Seller shall be responsible for Engineer's charges to Buyer for such time. Buyer may impose a set-off against payments due Seller to secure reimbursement for such charges.

3. If Seller requests a change of a previously approved Shop Drawing or Sample, Seller shall be responsible for Engineer's charges to Buyer for its review time, and Buyer may impose a set-off against payments due Seller to secure reimbursement for such charges, unless the need for such change is beyond the control of Seller.

E. *Submittals Other than Shop Drawings and Samples*

1. The following provisions apply to all Submittals other than Shop Drawings and Samples:

   a. Seller shall submit all such Submittals to the Engineer in accordance with the schedule of Submittals and pursuant to the applicable terms of the Procurement Contract Documents.

   b. Engineer will provide timely review of all such Submittals in accordance with the schedule of Submittals and return such Submittals with a notation of either Accepted or Not Accepted. Any such Submittal that is not returned within the time established in the schedule of Submittals will be deemed accepted.

   c. Engineer's review will be only to determine if the Submittal is acceptable under the requirements of the Procurement Contract Documents as to general form and content of the Submittal.

   d. If any such Submittal is not accepted, Seller shall confer with Engineer regarding the reason for the non-acceptance, and resubmit an acceptable document.

2. Procedures for the submittal and acceptance of the Progress Schedule, the Schedule of Submittals, and the Schedule of Values are set forth in Paragraphs 2.04 and 2.05.

Copyright© 2019 National Society of Professional Engineers, American Council of Engineering Companies, and American Society of Civil Engineers. All rights reserved.

7.07 *Indemnification*

A. To the fullest extent permitted by Laws and Regulations, Seller shall indemnify and hold harmless Buyer, Engineer, Project Owner, and any assignee of Buyer, including Contractor/Assignee, and their officers, directors, members, partners, employees, agents, consultants, contractors, and subcontractors, from and against all claims, costs, losses, and damages (including but not limited to all fees and charges of engineers, architects, attorneys, and other professionals and all court or arbitration or other dispute resolution costs) arising out of or relating to the performance of Seller's obligations under the Procurement Contract, provided that any such claim, cost, loss, or damage is attributable to bodily injury, sickness, disease, or death, or to injury to or destruction of tangible property (other than the Goods themselves), including the loss of use resulting therefrom, but only to the extent caused by any negligent act or omission of Seller, or any individual or entity directly or indirectly employed by Seller or anyone for whose acts Seller may be liable.

B. In any and all claims against Buyer, Engineer, Project Owner, or any assignee of Buyer, including Contractor/Assignee, or their officers, directors, members, partners, employees, agents, consultants, contractors, or subcontractors, by any employee (or the survivor or personal representative of such employee) of Seller, any subcontractor, any supplier, or any individual or entity directly or indirectly employed by any of them to furnish any of the Goods and Special Services, or anyone for whose acts any of them may be liable, the indemnification obligation under Paragraph 7.07.A will not be limited in any way by any limitation on the amount or type of damages, compensation, or benefits payable by or for Seller or any such subcontractor, supplier, or other individual or entity under workers' compensation acts, disability benefit acts, or other employee benefit acts.

7.08 *Concerning Subcontractors and Suppliers*

A. Seller may retain subcontractors and suppliers for the performance of parts of the furnishing of the Goods and Special Services. The Seller's retention of a subcontractor or supplier will not relieve Seller's obligation to Buyer to perform and complete the furnishing the Goods and Special Services in accordance with the Procurement Contract Documents.

ARTICLE 8—SHIPPING AND DELIVERY

8.01 *Shipping*

A. Seller shall select the carrier and bear all costs of packaging, transportation, insurance, special handling, and all other costs associated with shipment and delivery.

8.02 *Delivery*

A. Seller shall deliver the Goods free on board (FOB) to the Point of Destination, freight prepaid, in accordance with the Procurement Contract Times set forth in the Procurement Agreement, or other date agreed to by Buyer and Seller.

B. At least 10 days before shipment, Seller shall provide written notice to Buyer of the manner of shipment and the anticipated delivery date. The notice must also include any instructions concerning special equipment or services required at the Point of Destination to unload and care for the Goods. Seller shall also require the carrier to give Buyer at least 24 hours' notice by telephone prior to the anticipated time of delivery.

C. Buyer will be responsible and bear all costs for unloading the Goods from carrier.

Copyright© 2019 National Society of Professional Engineers, American Council of Engineering Companies, and American Society of Civil Engineers. All rights reserved.

D. Buyer will assure that adequate facilities are available to receive delivery of the Goods at the time established for delivery, or on another date agreed to by Buyer and Seller.

E. No partial deliveries will be allowed, unless permitted or required by the Procurement Contract Documents or agreed to in writing by Buyer.

F. Provisions governing inspection on delivery are set forth in Paragraph 9.02.

8.03 *Risk of Loss*

A. Risk of loss and insurable interests transfer from Seller to Buyer upon Buyer's receipt of the Goods.

B. Notwithstanding the provisions of Paragraph 8.03.A, if Buyer rejects the Goods as non-conforming, the risk of loss on such Goods will remain with Seller until Seller corrects the non-conformity or Buyer accepts the Goods. If rejected Goods remain at the Point of Destination pending modification and acceptance, then Seller shall be responsible for arranging adequate protection and maintenance of the Goods at Seller's expense.

ARTICLE 9—BUYER'S RIGHTS

9.01 *Seller's Warranties and Guarantees*

A. Seller warrants and guarantees to Buyer that the title to the Goods conveyed will be proper, its transfer rightful, and free from any security interest, lien, or other encumbrance. Seller shall defend, indemnify, and hold Buyer harmless against any liens, claims, or demands contesting or affecting title of the Goods conveyed.

B. Seller warrants and guarantees to Buyer that all Goods and Special Services will conform with the Procurement Contract Documents, and with the standards established by any Samples approved by Engineer. Engineer shall be entitled to rely on Seller's warranty and guarantee. If the Procurement Contract Documents do not otherwise specify the characteristics or the quality of the Goods, the Goods must comply with the requirements of Paragraph 7.02.B.

C. Seller's warranty and guarantee hereunder excludes defects or damage caused by:

1. abuse, improper modification, improper maintenance, or improper operation by persons other than Seller;

2. excessive corrosion or chemical attack, unless corrosive or chemically-damaging conditions were disclosed by Buyer in the Procurement Contract Documents and the Procurement Contract Documents required the Goods to withstand such conditions;

3. use in a manner contrary to Seller's written instructions for installation, operation, and maintenance; or

4. normal wear and tear under normal usage.

D. Seller's obligation to furnish the Goods and Special Services in accordance with the Procurement Contract Documents will be absolute. None of the following will constitute an acceptance of Goods and Special Services that are non-conforming, or a release of Seller's obligation to furnish the Goods and Special Services in accordance with the Procurement Contract Documents:

1. observations by Buyer, Engineer, or Project Owner;

Copyright© 2019 National Society of Professional Engineers, American Council of Engineering Companies, and American Society of Civil Engineers. All rights reserved.

2. recommendation by Engineer or payment by Buyer of any progress or final payment;

3. use of the Goods by Buyer or Project Owner;

4. any acceptance by Buyer, Engineer, or Project Owner, or any failure to do so;

5. the end of the correction period established in Paragraph 9.04;

6. the issuance of a notice of acceptance;

7. any inspection, test or approval by others; or

8. any correction of non-conforming Goods and Special Services by Buyer or Project Owner.

E. Buyer shall promptly notify Seller of any breach of Seller's warranties or guarantees.

9.02 *Inspections and Testing*

A. *General Provisions*

1. The Procurement Contract Documents specify required inspections and tests. Buyer shall have the right to perform, or cause to be performed, reasonable inspections and require reasonable tests of the Goods at Seller's facility, and at the Point of Destination. Seller shall allow Buyer a reasonable time to perform such inspections or tests.

2. Seller shall reimburse Buyer for all expenses, except for travel, lodging, and subsistence expenses of Buyer's and Engineer's representatives, for inspections and tests specified in the Procurement Contract Documents. If as the result of any such specified testing the Goods are determined to be non-conforming, then Seller shall also bear the travel, lodging, and subsistence expenses of Buyer's and Engineer's representatives, and all expenses of re-inspection or retesting.

3. Buyer shall bear all expenses of inspections and tests that are not specified in the Procurement Contract Documents (other than any re-inspection or retesting resulting from a determination of non-conformity, as set forth in Paragraph 9.03); provided, however, that if as the result of any such non-specified inspections or testing the Goods are determined to be non-conforming, then Seller shall bear all expenses of such inspections and testing, and of any necessary re-inspection and retesting.

4. Seller shall provide Buyer timely written notice of the readiness of the Goods for all inspections, tests, or approvals which the Procurement Contract Documents specify are to be observed by Buyer prior to shipment.

5. Buyer will give Seller timely notice of all specified tests, inspections, and approvals of the Goods which are to be conducted at the Point of Destination, and a representative of Seller will attend such tests, inspections, and approvals.

6. If, on the basis of inspections or testing, the Goods appear to be conforming, Buyer will give Seller prompt notice thereof. If on the basis of inspections or testing, the Goods appear to be non-conforming, Buyer will give Seller prompt notice thereof and will advise Seller of the remedy Buyer elects under the provisions of Paragraph 9.03.

7. Neither payments made by Buyer to Seller prior to any tests or inspections, nor any tests or inspections, will constitute acceptance of non-conforming Goods, or prejudice Buyer's rights under the Procurement Contract.

Copyright© 2019 National Society of Professional Engineers, American Council of Engineering Companies, and American Society of Civil Engineers. All rights reserved.

B. *Visual Inspection on Delivery*

1. Buyer will visually inspect the Goods upon delivery solely for purposes of identifying the Goods, general verification of quantities, and observation of apparent condition. Such visual inspection will not be construed as final or as receipt of any Goods and Special Services that, as a result of subsequent inspections and tests, are determined to be non-conforming.

2. If, on the basis of the visual inspection specified in Paragraph 9.02.B.1, the Goods appear to comply with the requirements of the Procurement Contract Documents as to quantities and condition, then within 10 days of delivery Buyer shall issue to Seller Buyer's acknowledgment of the receipt of Goods.

C. *Final Inspection*

1. After all of the Goods have been incorporated into the Project, tested in accordance with such testing requirements as are specified, and are functioning as required, and Seller has performed and completed all Special Services, Buyer will make a final inspection.

2. If, on the basis of the final inspection, Buyer determines that the Goods and Special Services are conforming, Buyer's notice thereof will constitute Buyer's acceptance of the Goods and Special Services, subject to any limitations stated in the notice.

3. If, on the basis of the final inspection, the Goods and Special Services are non-conforming, Buyer will identify the non-conformity in writing.

9.03 *Non-Conforming Goods and Special Services*

A. If, on the basis of inspections and testing prior to delivery, the Goods and Special Services are found to be non-conforming, or if at any time after Buyer has acknowledged receipt of delivery and before the expiration of the correction period described in Paragraph 9.04, Buyer determines that the Goods and Special Services are non-conforming, then Seller shall promptly, without cost to Buyer and in response to written instructions from Buyer, either correct such non-conforming Goods and Special Services, or, if Goods are rejected by Buyer, remove and replace the non-conforming Goods with conforming Goods, including all work required for reinstallation.

B. *Buyer's Rejection of Non-Conforming Goods*

1. If Buyer elects to reject the Goods in whole or in part, Buyer's notice to Seller will describe in sufficient detail the non-conforming aspect of the Goods. If Goods have been delivered to Buyer, Seller shall promptly, and within the Procurement Contract Times, remove and replace the rejected Goods.

2. Seller shall bear all costs, losses and damages attributable to the removal, replacement, reinspection, and retesting of the non-conforming Goods.

3. Upon rejection of the Goods, Buyer retains a security interest in the Goods to the extent of any payments made and expenses incurred in their testing and inspection.

C. *Buyer's Rejection of Non-Conforming Special Services*

Copyright© 2019 National Society of Professional Engineers, American Council of Engineering Companies, and American Society of Civil Engineers. All rights reserved.

1. If at any time Buyer elects to reject the Special Services in whole or in part, Buyer's notice to Seller will describe in sufficient detail the non-conforming aspect of the Special Services.

2. Seller shall promptly provide conforming Special Services acceptable to Buyer.

3. If Seller fails to provide conforming Special Services, Buyer may remove the Special Services from the scope of the Procurement Contract, and equitably reduce the Procurement Contract Price.

D. *Remedying Non-Conforming Goods*: If Buyer elects to permit the Seller to modify the Goods to correct the non-conformance, then Seller shall promptly provide a schedule for such modifications and shall make the Goods conforming within a reasonable time.

E. *Buyer's Acceptance of Non-Conforming Goods*: Instead of requiring correction or removal and replacement of non-conforming Goods discovered either before or after final payment, Buyer may accept the non-conforming Goods. Seller shall bear all reasonable costs, losses, and damages attributable to Buyer's evaluation of and determination to accept such non-conforming Goods.

F. *Seller Obligations*: Seller shall pay all claims, costs, losses, and damages, including but not limited to all fees and charges for re-inspection, retesting and for any engineers, architects, attorneys and other professionals, and all court or arbitration or other dispute resolution costs arising out of or relating to the non-conforming Goods and Special Services. Seller's obligations will include the costs of the correction or removal and replacement of the non-conforming Goods and the replacement of property of Buyer and others destroyed by the correction or removal and replacement of the non-conforming Goods, and obtaining conforming Special Services from others.

G. *Buyer's Rejection of Conforming Goods*: If Buyer asserts that Goods and Special Services are non-conforming and such Goods and Special Services are determined to be conforming, or if Buyer rejects as non-conforming Goods and Special Services that are later determined to be conforming, then Seller shall be entitled to reimbursement from Buyer of costs incurred by Seller in inspecting, testing, correcting, removing, or replacing the conforming Goods and Special Services, including but not limited to fees and charges of engineers, architects, attorneys and other professionals, and all court or arbitration or other dispute resolution costs associated with the incorrect assertion of non-conformance or rejection of conforming Goods and Special Services.

9.04 *Correction Period*

A. Seller's responsibility for correcting all non-conformities in the Goods and Special Services will extend for a period of one year after the acceptance of the Goods and Special Services in accordance with Paragraph 9.02.C.2.

B. Where non-conforming Goods and Services (and damage to other work resulting therefrom) have been corrected or removed and replaced under this paragraph, the correction period hereunder with respect to such Goods and Services will be extended for an additional period of one year after such correction or removal and replacement has been satisfactorily completed.

Copyright© 2019 National Society of Professional Engineers, American Council of Engineering Companies, and American Society of Civil Engineers. All rights reserved.

C. Seller's obligations under this paragraph are in addition to all other obligations and warranties. The provisions of this paragraph may not be construed as a substitute for, or a waiver of, the provisions of any applicable statute of limitation or repose.

ARTICLE 10—ENGINEER'S STATUS

10.01 *Engineer's Role Defined*

A. Engineer will be Buyer's representative until assignment (if any) of the Procurement Contract.

B. The duties and responsibilities and the limitations of authority of Engineer prior to assignment, if any, of the Procurement Contract, are set forth in the Procurement Contract Documents.

C. Engineer's responsibilities, if any, after an assignment (if any) of the Procurement Contract, are set forth in the Procurement Agreement.

10.02 *Duties and Responsibilities; Authority; Limitations*

A. As set forth in Article 3, Engineer will be the initial interpreter of the Procurement Contract Documents and judge of the acceptability of the Goods and Special Services, and will issue clarifications, interpretations, and decisions regarding such issues.

B. Acting on behalf of Buyer under the provisions of Article 9, Engineer has the authority to disapprove or reject Goods and Special Services that Engineer believes to be non-conforming. Engineer also has the authority to require special inspection or testing of the Goods or Special Services as provided in Paragraph 9.02, whether or not the Goods are fabricated or installed, or the Special Services are completed.

C. Engineer may authorize minor deviations or variations in the Procurement Contract Documents by: 1) written approval of specific variations set forth in Shop Drawings when Seller has duly noted such variations as required in Paragraph 7.06.A.3, or 2) a Field Order.

D. As set forth in Article 12, Engineer will review Claims, and render decisions on Claims.

E. In rendering any interpretations, clarifications, reviews, decisions, disapprovals, acceptances, rejections, authorizations, and judgments, Engineer will not show partiality to Buyer or Seller. Engineer will not be liable to Buyer, Seller, or others in connection with any interpretations, clarifications, reviews, decisions, disapprovals, acceptances, rejections, authorizations, or judgments conducted or rendered by Engineer in good faith.

F. Engineer will not supervise, direct, control, or have authority over or be responsible for the means, methods, techniques, sequences, or procedures used by Seller to perform its obligations under this Procurement Contract, or the safety precautions and programs incident thereto, or for any failure of Seller to comply with Laws and Regulations applicable to the performance of its obligations. Engineer will not be responsible for Seller's failure to furnish the Goods and Special Services in accordance with the Procurement Contract Documents.

Copyright© 2019 National Society of Professional Engineers, American Council of Engineering Companies, and American Society of Civil Engineers. All rights reserved.

ARTICLE 11—CHANGES

11.01 *Amending and Supplementing the Procurement Contract*

A. The Procurement Contract may be amended or supplemented by a Change Order, a Change Directive, or a Field Order.

B. If an amendment or supplement to the Procurement Contract includes a change in the Procurement Contract Price or the Procurement Contract Times, such amendment or supplement must be set forth in a Change Order.

C. All changes to the Procurement Contract that involve (1) the conformance or acceptability of the Goods and Special Services, (2) the design (as set forth in the Procurement Drawings, Procurement Specifications, or otherwise), or (3) other engineering or technical matters, must be supported by Engineer's recommendation. Buyer and Seller may amend other terms and conditions of the Procurement Contract without the recommendation of the Engineer.

11.02 *Change Orders*

A. Buyer and Seller shall execute appropriate Change Orders covering:

1. Changes in Procurement Contract Price or Procurement Contract Times which are agreed to by the parties, including any undisputed sum or amount of time for Goods and Special Services furnished in accordance with a Change Directive;

2. Changes in Procurement Contract Price resulting from a Buyer set-off, unless Seller has duly contested such set-off;

3. Changes in the Goods and Special Services which are: (a) ordered by Buyer pursuant to Paragraph 11.05, (b) required because of Buyer's acceptance of non-conforming Goods and Services under Paragraph 9.03 or (c) agreed to by the parties, subject to the need for Engineer's recommendation if the change in the Goods and Special Services involves the design (as set forth in the Procurement Drawings, Procurement Specifications, or otherwise) or other engineering or technical matters; and

4. Changes that embody the substance of any final and binding results under: Paragraph 11.03.B, resolving the impact of a Change Directive; Article 12, Claims; and similar provisions.

B. If Buyer or Seller refuses to execute a Change Order that is required to be executed under the terms of Paragraph 11.02.A, it will be deemed to be of full force and effect, as if fully executed.

11.03 *Change Directives*

A. A Change Directive will not change the Procurement Contract Price or the Procurement Contract Times but is evidence that the parties expect that the modification ordered or documented by a Change Directive will be incorporated in a subsequently issued Change Order, following negotiations by the parties as to the Change Directive's effect, if any, on the Procurement Contract Price and Procurement Contract Times; or, if negotiations are unsuccessful, by a determination under the terms of the Procurement Contract Documents governing adjustments, expressly including Paragraph 11.08 regarding change of Procurement Contract Price.

Copyright© 2019 National Society of Professional Engineers, American Council of Engineering Companies, and American Society of Civil Engineers. All rights reserved.

B. If Buyer has issued a Change Directive and Buyer or Seller believes that an adjustment in Procurement Contract Times or Procurement Contract Price is necessary, then such party shall submit a Claim seeking such an adjustment no later than 30 days after the completion of the Goods and Services set out in the Change Directive.

11.04 *Field Orders*

A. Engineer may authorize minor changes in the Goods and Services if the changes do not involve an adjustment in the Procurement Contract Price or the Procurement Contract Times and are compatible with the design concept as indicated by the Procurement Contract Documents. Such changes will be accomplished by a Field Order and will be binding on Buyer and also on Seller, which shall perform the Goods and Special Services involved promptly.

B. If Seller believes that a Field Order justifies an adjustment in the Procurement Contract Price or Procurement Contract Times, then before proceeding with the Goods and Special Services at issue, Seller shall submit a Claim as provided herein.

11.05 *Buyer-Authorized Changes in the Goods and Special Services*

A. Without invalidating the Procurement Contract and without notice to any surety, Buyer may, at any time or from time to time, order additions, deletions, or revisions in the Goods and Special Services. Changes involving the design (as set forth in the Procurement Drawings, Procurement Specifications, or otherwise) or other engineering or technical matters will be supported by Engineer's recommendation.

B. Such changes in the Goods and Special Services may be accomplished by a Change Order, if Buyer and Seller have agreed as to the effect, if any, of the changes on Procurement Contract Times or Procurement Contract Price; or by a Change Directive. Upon receipt of any such document, Seller shall promptly proceed with the Goods and Special Services involved; or, in the case of a deletion in the Goods and Special Services, promptly cease activities with respect to such deletion. Added or revised Goods and Special Services must be performed under the applicable conditions of the Procurement Contract Documents.

11.06 *Buyer's Contingency Allowance*

A. The Buyer's Contingency Allowance, if any such is set forth in the Procurement Agreement, is for the sole use of Buyer to cover unanticipated costs.

B. If Buyer exercises its unilateral right to use all or a portion of the Buyer's Contingency Allowance, Buyer will issue a written directive that documents the costs to which the allowance is applied, Seller's entitlement to compensation, and the consequent reduction in such allowance.

C. Prior to final payment, the Total Price, as set forth in the Procurement Agreement, will be duly adjusted to account for any unused portion of the Buyer's Contingency Allowance.

D. The Procurement Agreement, Article 5, addresses the impact on Buyer's Contingency Allowance of an assignment of the Procurement Contract.

11.07 *Unauthorized Changes in the Goods and Special Services*

A. Seller shall not be entitled to an increase in the Procurement Contract Price or an extension of the Procurement Contract Times with respect to any work performed that is not required by the Procurement Contract Documents, as amended, modified, or supplemented.

Copyright© 2019 National Society of Professional Engineers, American Council of Engineering Companies, and American Society of Civil Engineers. All rights reserved.

11.08 *Change of Procurement Contract Price*

A. The Procurement Contract Price may only be changed by a Change Order. Any Claim for an adjustment of Procurement Contract Price must comply with the provisions of Article 12.

B. An adjustment in the Procurement Contract Price will be determined as follows:

1. For changes in Unit Price Goods and Special Services, by application of the unit prices to the quantities of the items involved;

2. To the extent the cost of the change is not covered by unit prices, then by a mutually agreed lump sum; or

3. To the extent the cost of the change is not covered by unit prices and the parties do not reach mutual agreement to a lump sum, then on the basis of documented costs plus a Seller's fee for overhead and profit of 15%.

11.09 *Change of Procurement Contract Times*

A. The Procurement Contract Times may only be changed by a Change Order. Any Claim for an adjustment in the Procurement Contract Times must comply with the provisions of Article 12.

11.10 *Notification to Surety*

A. If the provisions of any bond require notice to be given to a surety of any change affecting the general scope of the Goods and Special Services or the provisions of the Procurement Contract (including, but not limited to, Procurement Contract Price or Procurement Contract Times), the giving of any such notice will be Seller's responsibility. The amount of each applicable bond will be adjusted to reflect the effect of any such change.

ARTICLE 12—CLAIMS, DISPUTES, AND DISPUTE RESOLUTION

12.01 *Claims*

A. The parties agree to endeavor to avoid or resolve Claims through direct, good faith discussions and negotiations whenever practicable. Such discussions and negotiations should at the outset address whether the parties mutually agree to suspend the Claims process, including the time periods established in this Paragraph 12.01; if so, a written record of such mutual agreement should be made and jointly executed.

B. Claimant shall deliver to Engineer and the other party to the Procurement Contract written notice of each Claim within 15 days after the occurrence of the event giving rise to the Claim.

C. Claimant shall deliver written supporting data to Engineer and the other party within 45 days after such occurrence unless Engineer allows an additional period of time.

D. Engineer will review each such Claim and render a decision in writing within 30 days after receipt of the last submittal of the claimant or the last submittal of the opposing party, if any.

E. If Engineer does not render a formal written decision on a Claim within the time stated in Paragraph 12.01.D., Engineer shall be deemed to have issued a decision denying the Claim in its entirety 31 days after receipt of the last submittal of the claimant or the last submittal of the opposing party, if any.

Copyright© 2019 National Society of Professional Engineers, American Council of Engineering Companies, and American Society of Civil Engineers. All rights reserved.

F. The rendering of a decision by Engineer pursuant to this Paragraph 12.01 with respect to any such Claim, dispute, or other matter (except any which have been waived by the making or acceptance of final payment) will be a condition precedent to any exercise by Buyer or Seller of such rights or remedies as either may otherwise have under the Procurement Contract Documents or by Laws or Regulations in respect of any such Claim, dispute, or other matter. If the exercise of such rights or remedies will imminently be time-barred, a party may take actions necessary to preserve such rights and remedies notwithstanding the lack of the condition precedent referred to in this paragraph.

G. If a submitted matter in question concerns terms and conditions of the Procurement Contract Documents that do not involve (1) the performance or acceptability of Goods and Special Services under the Procurement Contract Documents, (2) the design (as set forth in the Procurement Drawings, Procurement Specifications, Addenda, or otherwise), or (3) other engineering or technical matters, then Engineer will promptly give written notice to Buyer and Seller that Engineer is unable to provide a decision or interpretation. If Buyer and Seller are unable to agree on resolution of such a matter in question, either party may pursue resolution as provided in Paragraph 12.02.

H. Engineer's written decision on such Claim or a decision denying the Claim in its entirety that is deemed to have been issued pursuant to Paragraph 12.01, will be final and binding upon Buyer and Seller 30 days after it is issued unless within 30 days of issuance Buyer or Seller appeals Engineer's decision by initiating the mediation of such Claim in accordance with the dispute resolution procedures set forth in Paragraph 12.02.

I. If Article 12 has been amended to delete the mediation requirement, then Buyer or Seller may appeal Engineer's decision within 30 days of issuance by following the alternative dispute resolution process set forth in Article 12, as amended; or if no such alternative dispute resolution process has been set forth, Buyer or Seller may appeal Engineer's decision by 1) delivering to the other party within 30 days of the date of such decision a written notice of intent to submit the Claim to a court of competent jurisdiction, and 2) within 60 days after the date of such decision instituting a formal proceeding in a court of competent jurisdiction.

J. No Claim for an adjustment in Procurement Contract Price or Procurement Contract Times will be valid if not submitted in accordance with Article 12.

K. The effect on Claims of an assignment of the Procurement Contract by Buyer to a Contractor/Assignee is addressed in the Procurement Agreement, Article 5.

12.02 *Dispute Resolution Method*

A. Either Buyer or Seller may initiate the mediation of (1) any Claim decided in writing by Engineer under Paragraph 12.01 before such decision becomes final and binding, or (2) any other dispute between the parties, including but not limited to any dispute arising after final inspection of the Goods and Services. The mediation will be governed by the Construction Industry Mediation Rules of the American Arbitration Association in effect as of the Effective Date of the Procurement Contract. The request for mediation must be submitted in writing to the American Arbitration Association and the other party to the Procurement Contract. Timely submission of the request will stay Engineer's decision from becoming final and binding.

B. Mediation is a condition precedent to seeking final dispute resolution under Paragraph 12.01.C. Buyer and Seller shall participate in the mediation process in good faith.

Copyright© 2019 National Society of Professional Engineers, American Council of Engineering Companies, and American Society of Civil Engineers. All rights reserved.

The process must be concluded within 60 days of filing of the request. The date of termination of the mediation will be determined by application of the mediation rules referenced above.

C. If the mediation process does not result in resolution of the dispute, then Engineer's written Claim decision under Paragraph 12.01.D or a Claim denial pursuant to Paragraph 12.01.E becomes final and binding, or if applicable such other dispute is deemed resolved in favor of respondent, unless, within 30 days after termination of the mediation, Buyer or Seller:

1. elects in writing to invoke any final dispute resolution process provided for in the Supplementary Conditions, or

2. agrees with the other party to submit the Claim or dispute to another final dispute resolution process, or

3. if no final dispute resolution process has been provided for in the Supplementary Conditions, delivers to the other party written notice of the intent to submit the Claim or dispute to a court of competent jurisdiction, and within 60 days of the termination of the mediation institutes such formal proceeding.

ARTICLE 13—PAYMENT

13.01 *Applications for Progress Payments*

A. Seller shall submit to Buyer for Engineer's review Applications for Payment filled out and signed by Seller and accompanied by such supporting documentation as is required by the Procurement Contract Documents and also as Buyer or Engineer may reasonably require.

B. The timing and amounts of progress payments will be as stipulated in the Procurement Agreement.

C. Any Application for Payment that is based in whole or in part on the delivery of Goods must be accompanied by a bill of sale, invoice, or other documentation reasonably satisfactory to Buyer warranting that Buyer has rightfully received good title to the Goods from Seller and that, upon payment, the Goods will be free and clear of all liens. Such documentation will include releases and waivers from all parties with viable lien rights.

D. Buyer shall notify Seller promptly of any deficiency in the required documentation.

13.02 *Review of Applications for Progress Payments*

A. *Review of Applications*

1. Engineer will, within 10 days after receipt of each Application for Payment, including each resubmittal, either indicate in writing a recommendation of payment and present the Application to Buyer, or return the Application to Seller indicating in writing Engineer's reasons for refusing to recommend payment.

2. Engineer's recommendation of any payment requested in an Application for Payment will constitute a representation by Engineer to Buyer, based on Engineer's observations of Seller's progress, as an experienced and qualified design professional, and on Engineer's review of the Application for Payment and the accompanying data and schedules, that to the best of Engineer's knowledge, information and belief:

Copyright© 2019 National Society of Professional Engineers, American Council of Engineering Companies, and American Society of Civil Engineers. All rights reserved.

a. the Goods and Special Services or other obligations of Seller have progressed to the point indicated;

b. the quality of the Goods and Special Services or other obligations of Seller are generally in accordance with the Procurement Contract Documents; and

c. the conditions precedent to Seller being entitled to such payment appear to have been fulfilled in so far as it is Engineer's responsibility to observe the Seller's progress.

3. By recommending any such payment Engineer will not thereby be deemed to have represented that:

a. inspections made to check the quality or the quantity of the Goods and Special Services or other obligations of Seller have been exhaustive, extended to every aspect of the Goods and Special Services or other obligations of Seller in progress, or involved detailed inspections of the Goods and Special Services or other obligations of Seller beyond the responsibilities specifically assigned to Engineer in the Procurement Contract; or

b. there may not be other matters or issues between the parties that might entitle Seller to be paid additionally by Buyer, or entitle Buyer to withhold payment to Seller.

4. Neither Engineer's review of Seller's progress for the purposes of recommending payments nor Engineer's recommendation of any payment, including final payment, will impose responsibility on Engineer:

a. to supervise, direct, or control the Seller's performance or furnishing of Goods and Special Services or other obligations of Seller; or

b. for the means, methods, techniques, sequences, or procedures of construction, manufacturing, fabrication, installation, or shipping, or the safety precautions and programs incident thereto; or

c. for Seller's failure to comply with Laws and Regulations applicable to Seller's performance under the Procurement Contract; or

d. to make any examination to ascertain how or for what purposes Seller has used the money paid for the Procurement Contract Price; or

e. to determine that title to any of the Goods or component parts have passed to Buyer free and clear of any Liens.

5. Engineer may refuse to recommend the whole or any part of any payment if, in Engineer's opinion, it would be incorrect to make the representations to Buyer stated in Paragraph 13.02.A.2.

6. Engineer will recommend reductions in payment (set-offs) necessary in Engineer's opinion to protect Buyer from loss because:

a. the Goods and Services are non-conforming, requiring correction or replacement;

b. the Procurement Contract Price has been reduced by Change Orders;

Copyright© 2019 National Society of Professional Engineers, American Council of Engineering Companies, and American Society of Civil Engineers. All rights reserved.

c. Buyer has been required to correct non-conforming Goods and Special Services in accordance with Paragraph 9.03.C, or has accepted non-conforming Goods and Special Services pursuant to Paragraph 9.03.E; or

d. Engineer has actual knowledge of the occurrence of any of the events that would constitute a default by Seller and therefore justify termination for cause under the Procurement Contract Documents.

13.03 *Basis and Amount of Progress Payments*

A. The basis and amounts of the progress payments will be as provided in the Procurement Agreement, subject to the provisions of this Article 13 regarding reductions in payment.

13.04 *Suspension of or Reduction in Payment*

A. Buyer may temporarily cease making progress payments, or reduce the amount of a progress payment, even though recommended for payment by Engineer, under the following circumstances:

1. Buyer has reasonable grounds to conclude that Seller will not furnish the Goods or the Special Services in accordance with the Procurement Contract Documents, and

2. Buyer has requested in writing assurances from Seller that the Goods and Special Services will be delivered or furnished in accordance with the Procurement Contract Documents, and Seller has failed to provide adequate assurances within ten days of Buyer's written request.

3. In addition to any reductions in payment (set-offs) recommended by Engineer, Buyer is entitled to impose a set-off against payment based on any of the following:

a. claims have been made against Buyer based on Seller's conduct in the performance or furnishing of the Goods and Special Services, or has incurred costs, losses, or damages resulting from Seller's conduct in the performance or furnishing of the Goods and Special Services, including but not limited to claims, costs, losses, or damages from workplace injuries, adjacent property damage, non-compliance with Laws and Regulations, and patent infringement;

b. Seller has failed to take reasonable and customary measures to avoid damage, delay, disruption, and interference with other work at or adjacent to the Point of Destination or the worksite;

c. Seller has failed to provide and maintain required bonds or insurance;

d. Buyer has incurred extra charges or engineering costs related to Submittal reviews, evaluations of proposed substitutes, tests and inspections, or return visits to manufacturing or assembly facilities;

e. the Goods and Special Services are non-conforming, requiring correction or replacement;

f. Buyer has been required to correct non-conforming Goods and Special Services, in accordance with Paragraph 9.03.C, or has accepted non-conforming Goods and Special Services pursuant to Paragraph 9.03.E;

g. the Procurement Contract Price has been reduced by Change Orders;

Copyright© 2019 National Society of Professional Engineers, American Council of Engineering Companies, and American Society of Civil Engineers. All rights reserved.

h. an event that would constitute a default by Seller and therefore justify a termination for cause has occurred;

i. liquidated or other damages have accrued as a result of Seller's failure to achieve Milestones, Substantial Completion, or final completion of the Goods and Special Services; or

j. liens have been filed in connection with the Procurement Contract, except where Seller has delivered a specific bond satisfactory to Buyer to secure the satisfaction and discharge of such liens.

B. If Buyer refuses to make payment of the full amount recommended by Engineer, Buyer will provide Seller and Engineer immediate written notice stating the reason for such action and promptly pay Seller any amount remaining after deduction of the amount withheld. Buyer shall promptly pay Seller the amount withheld when Seller corrects the reason for such action to Buyer's satisfaction.

13.05 *Final Payment*

A. After Seller has corrected all non-conformities to the reasonable satisfaction of Buyer and Engineer and furnished all Special Services, Seller may submit its final Application for Payment following the procedures for progress payments.

B. The final Application for Payment will be accompanied by all documentation called for in the Procurement Contract Documents (including but not limited to all final operations and maintenance manuals, and any special warranties), a list of all unsettled Claims, and the written consent of surety to the making of final payment.

C. If, on the basis of final inspection and the review of the final Application for Payment and accompanying documentation, Engineer is reasonably satisfied that Seller has furnished the Goods and Special Services in accordance with the Procurement Contract Documents, and that Seller has fulfilled all other obligations under the Procurement Contract Documents, then Engineer will, within 10 days after receipt of the final Application for Payment, indicate in writing Engineer's recommendation of final payment subject to the provisions of Paragraph 13.02, and present the final Application for Payment to Buyer. Such recommendation will account for any set-offs against payment that are necessary in Engineer's opinion to protect Buyer from loss for the reasons stated in Paragraph 13.02.

D. If Engineer does not recommend final payment, Engineer will return the final Application for Payment to Seller, indicating the reasons for refusing to recommend final payment, in which case Seller shall make the necessary corrections and resubmit the final Application for Payment.

E. In support of its recommendation of final payment Engineer will also give written notice to Buyer and Seller that the Goods and Special Services are acceptable, subject to stated limitations in the notice and to the provisions of Paragraph 13.06.

F. If the final Application for Payment and accompanying documentation are appropriate as to form and substance, Buyer shall, within 30 days after receipt thereof, pay Seller the amount recommended by Engineer, less any sum Buyer is entitled to set off against Engineer's recommendation, pursuant to the provisions of Paragraph 13.04.

G. Buyer will not make final payment, or return or release included retainage (if any) at any time, unless Seller submits written consent of the surety to such payment, return, or release.

Copyright© 2019 National Society of Professional Engineers, American Council of Engineering Companies, and American Society of Civil Engineers. All rights reserved.

13.06 *Waiver of Claims*

A. By making final payment, Buyer waives its claim or right to liquidated damages or other damages for late completion by Seller, except as set forth in an outstanding Claim, appeal, set-off, or express reservation of rights by Buyer. Buyer reserves all other claims or rights after final payment.

B. The acceptance of final payment by Seller will constitute a waiver by Seller of all claims and rights against Buyer other than those pending matters that have been duly submitted or appealed under the provisions of Article 12.

ARTICLE 14—CANCELLATION, SUSPENSION, AND TERMINATION

14.01 *Cancellation*

A. Buyer has the right to cancel the Procurement Contract, without cause, at any time prior to delivery of the Goods by written notice. Cancellation pursuant to the terms of this paragraph will not constitute a breach of contract by Buyer. Upon cancellation:

1. Buyer shall pay Seller for the direct costs incurred in producing any Goods that Seller has specially manufactured for the Project, plus a fair and reasonable amount for overhead and profit.

2. For Goods that are not specially manufactured for the Project, Seller shall be entitled to a restocking charge of 10 percent of the unpaid Procurement Contract Price of such Goods.

14.02 *Suspension of Performance by Buyer*

A. Buyer has the right to suspend performance of the Procurement Contract for up to 90 days, without cause, by written notice. Upon suspension under this paragraph, Seller shall be entitled to an increase in the Procurement Contract Times and Procurement Contract Price caused by the suspension, provided that performance would not have been suspended or delayed for causes attributable to Seller.

14.03 *Suspension of Performance by Seller*

A. Seller may suspend the furnishing of the Goods and Special Services only under the following circumstance:

1. Seller has reasonable grounds to conclude that Buyer will not perform its future payment obligations under the Procurement Contract; and

2. Seller has requested in writing assurances from Buyer that future payments will be made in accordance with the Procurement Contract, and Buyer has failed to provide such assurances within ten days of Seller's written request.

14.04 *Breach and Termination*

A. *Buyer's Breach*

1. Seller shall have the right to terminate the Procurement Contract for cause by declaring a breach if Buyer fails to comply with any material provision of the Procurement Contract. Upon termination, Seller shall be entitled to all remedies provided by Laws and Regulations.

Copyright© 2019 National Society of Professional Engineers, American Council of Engineering Companies, and American Society of Civil Engineers. All rights reserved.

2. If Seller believes Buyer is in breach of its obligations under the Procurement Contract, Seller shall provide Buyer with reasonably prompt written notice setting forth in sufficient detail the reasons for declaring that it believes a breach has occurred. Buyer shall have 7 days from receipt of the written notice declaring the breach (or such longer period of time as Seller may grant in writing) within which to cure or to proceed diligently to cure such alleged breach.

B. *Seller's Breach*

1. Buyer may terminate Seller's right to perform the Procurement Contract for cause by declaring a breach should Seller fail to comply with any material provision of the Procurement Contract Documents. Upon termination, Buyer shall be entitled to all remedies provided by Laws and Regulations.

2. In the event Buyer believes Seller is in breach of its obligations under the Procurement Contract, Buyer shall provide Seller with reasonably prompt written notice setting forth in sufficient detail the reasons for declaring that it believes a breach has occurred. Seller shall have 7 days from receipt of the written notice declaring the breach (or such longer period of time as Buyer may grant in writing) within which to cure or to proceed diligently to cure such alleged breach.

3. If and to the extent that Seller has provided a performance bond under the provisions of Paragraph 5.01, the notice and cure procedures of that bond, if any, will supersede the notice and cure procedures of Paragraph 14.04.B.2.

ARTICLE 15—MISCELLANEOUS

15.01 *Giving Notice*

A. Whenever any provision of the Procurement Contract requires the giving of written notice to Buyer, Seller, or Engineer, it will be deemed to have been validly given if delivered:

1. in person, by a commercial courier service or otherwise, to the recipient's place of business;

2. by registered or certified mail, postage prepaid, to the recipient's place of business; or

3. by e-mail to the recipient, with the words "Formal Notice" or similar in the e-mail's subject line.

15.02 *Controlling Law*

A. This Procurement Contract is to be governed by the law of the state in which the Goods are to be installed.

B. In the case of any conflict between the express terms of this Procurement Contract and the Uniform Commercial Code, as adopted in the state whose law governs, it is the intent of the parties that the express terms of this Procurement Contract will apply.

15.03 *Computation of Time*

A. When any period of time is referred to in the Procurement Contract by number of days, it will be computed to exclude the first and include the last day of such period. If the last day of any such period falls on a Saturday or Sunday or on a day made a legal holiday by the law of the applicable jurisdiction, such day will be omitted from the computation.

Copyright© 2019 National Society of Professional Engineers, American Council of Engineering Companies, and American Society of Civil Engineers. All rights reserved.

15.04 *Cumulative Remedies*

A. The duties and obligations imposed by these General Conditions and the rights and remedies available hereunder to the parties hereto are in addition to, and are not to be construed in any way as a limitation of, any rights and remedies available to any or all of them which are otherwise imposed or available by Laws or Regulations, by special warranty or guarantee, or by other provisions of the Procurement Contract, and the provisions of this paragraph will be as effective as if repeated specifically in the Procurement Contract in connection with each particular duty, obligation, right, and remedy to which they apply.

15.05 *Survival of Obligations*

A. All representations, indemnifications, warranties, and guarantees made in, required by, or given in accordance with the Procurement Contract, as well as all continuing obligations indicated in the Procurement Contract, will survive final payment, completion, and acceptance of the Goods and Special Services or termination or completion of the Procurement Contract or of the services of Seller.

15.06 *Entire Agreement*

A. Buyer and Seller agree that this Procurement Contract is the complete and final agreement between them, and supersedes all prior negotiations, representations, or agreements, either written or oral. This Procurement Contract may not be altered, modified, or amended except in writing signed by an authorized representative of both parties.

15.07 *No Waiver*

A. A party's non-enforcement of any provision will not constitute a waiver of that provision, nor will it affect the enforceability of that provision or of the remainder of this Procurement Contract.

15.08 *Headings*

A. Article and paragraph headings are inserted for convenience only and do not constitute parts of these General Conditions.

15.09 *Successors and Assigns*

A. Buyer and Seller each binds itself, its partners, successors, assigns, and legal representatives to the other party hereto, its partners, successors, assigns, and legal representatives in respect to all covenants, agreements, and obligations contained in the Procurement Contract.

Copyright© 2019 National Society of Professional Engineers, American Council of Engineering Companies, and American Society of Civil Engineers. All rights reserved.

SUPPLEMENTARY CONDITIONS OF THE PROCUREMENT CONTRACT

TABLE OF CONTENTS

Page

Article 1— Definitions and Terminology 1
Article 2— Preliminary Matters 1
Article 3— Procurement Contract Documents 1
Article 4— Commencement and Progress of Work 1
Article 5— Bonds and Insurance 1
Article 6— Licenses and Fees 4
Article 7— Seller's Responsibilities 5
Article 8— Shipping and Delivery 5
Article 9— Buyer's Rights 6
Article 10— Engineer's Status 7
Article 11— Changes 7
Article 12— Claims, Disputes, and Dispute Resolution 7
Article 13— Payment 7
Article 14— Cancellation, Suspension, and Termination 7
Article 15— Miscellaneous 7

Copyright© 2019 National Society of Professional Engineers, American Council of Engineering Companies, and American Society of Civil Engineers. All rights reserved.

SUPPLEMENTARY CONDITIONS OF THE PROCUREMENT CONTRACT

These Supplementary Conditions amend or supplement EJCDC® P-700, Standard General Conditions of the Procurement Contract (2019). The General Conditions remain in full force and effect except as amended.

The terms used in these Supplementary Conditions have the meanings stated in the General Conditions. Additional terms used in these Supplementary Conditions have the meanings stated below, which are applicable to both the singular and plural thereof.

The address system used in these Supplementary Conditions is the same as the address system used in the General Conditions, with the prefix "SC" added—for example, “Paragraph SC-4.05.”

ARTICLE 1—DEFINITIONS AND TERMINOLOGY

No suggested Supplementary Conditions in this Article.

ARTICLE 2—PRELIMINARY MATTERS

2.01 *Copies of Documents*

SC-2.02 Amend the first sentence of Paragraph 2.02.A. to read as follows:

Buyer shall furnish to Seller **two (2)** printed copies of the Procurement Contract Documents (including one fully signed counterpart of the Procurement Agreement), and **one (1) copy** in electronic portable document format (PDF).

ARTICLE 3—PROCUREMENT CONTRACT DOCUMENTS

No suggested Supplementary Conditions in this Article.

ARTICLE 4—COMMENCEMENT AND PROGRESS OF WORK

No suggested Supplementary Conditions in this Article.

ARTICLE 5—BONDS AND INSURANCE

5.01 *Performance, Payment, and Other Bonds*

SC-5.01 Add the following paragraphs immediately after Paragraph 5.01.A:

1. *Required Performance Bond Form*: The performance bond that Seller furnishes will be in the form of EJCDC® P-610, Performance Bond (2010 or 2019 edition).
2. *Required Payment Bond Form*: The payment bond that Contractor furnishes will be in the form of EJCDC® P-615, Payment Bond (2010 or 2019 edition).

5.02 *Insurance*

SC-5.02 Add the following new paragraphs immediately after Paragraph 5.02.E:

F. Seller shall purchase and maintain such liability and other insurance as is appropriate for the furnishing of Goods and Special Services and as will provide protection from claims set forth

Copyright© 2019 National Society of Professional Engineers, American Council of Engineering Companies, and American Society of Civil Engineers. All rights reserved.

below which may arise out of or result from Seller's furnishing of the Goods or Special Services and Seller's other obligations under the Procurement Contract Documents, whether the furnishing of Goods and Special Services or other obligations are to be performed by Seller, any subcontractor or supplier, or by anyone directly or indirectly employed by any of them to furnish the Goods and Special Services, or by anyone for whose acts any of them may be liable:

1. claims under workers' compensation, disability benefits, and other similar employee benefit acts;
2. claims for damages because of bodily injury, occupational sickness or disease, or death of Seller's employees;
3. claims for damages because of bodily injury, sickness or disease, or death of any person other than Seller's employees;
4. claims for damages insured by reasonably available personal injury liability coverage which are sustained: (a) by any person as a result of an offense directly or indirectly related to the employment of such person by Seller, or (b) by any other person for any other reason;
5. claims for damages, other than to the Goods, because of injury to or destruction of tangible property wherever located; and
6. claims for damages because of bodily injury or death of any person or property damage arising out of the ownership, maintenance or use of any motor vehicle.

G. The policies of insurance so required by this Paragraph 5.02 to be purchased and maintained must:

1. with respect to insurance required by Paragraphs SC-5.02.F.3 through SC-5.02.F.6 inclusive, include as additional insureds (subject to any customary exclusion in respect of professional liability) Buyer, Engineer, their consultants, and all of whom must be listed as additional insureds, but only in respect of work performed by or on behalf of the named insured, Seller, and only to the extent that the additional insured is held liable for the negligence or other culpability of Seller. Coverage under Seller's policy does not extend to liability arising out of the additional insured's own negligence. Also include coverage for the respective officers, directors, partners, employees, agents, and other consultants and subcontractors of each and any of all such additional insureds, and the insurance afforded to these additional insureds must provide primary coverage for all claims covered thereby;
2. include the specific coverages and be written for the limits of liability provided below or required by Laws or Regulations, whichever is greater;
3. include completed operations insurance;
4. include contractual liability insurance covering Seller's indemnity obligations under Paragraph 7.07;
5. contain a provision or endorsement that the coverage afforded will not be canceled, or renewal refused, until at least 30 days prior written notice has been given to the purchasing policyholder. Within three days of receipt of any such written notice, the

Copyright© 2019 National Society of Professional Engineers, American Council of Engineering Companies, and American Society of Civil Engineers. All rights reserved.

purchasing policyholder will provide a copy of the notice to the other party, each other insured, and Engineer;

6. remain in effect at least until final payment and at all times thereafter when Seller may be correcting, removing, or replacing non-conforming Goods in accordance with Paragraph 9.03 and 9.04; and

7. with respect to completed operations insurance, and any insurance coverage written on a claims-made basis, remain in effect for at least two years after final payment (and Seller shall furnish Buyer and each other additional insured identified in these Supplementary Conditions, to whom a certificate of insurance has been issued, evidence satisfactory to Buyer and any such additional insured of continuation of such insurance at final payment and one year thereafter).

H. The limits of liability for the insurance required by Paragraph SC-5.02.F must provide coverage for the following amounts or greater where required by Laws and Regulations:

1. Workers' Compensation, and related coverages under Paragraphs SC-5.02.F.1 and F.2:

a. The Seller shall procure and maintain, at their own expense, during the contract period, in accordance with the provisions of the laws of the state in which the work is performed, Workmen's Compensation Insurance, including occupational disease provisions, for all of his employees at the site of the project and in case any work is sublet, the Seller shall require such subcontractor similarly to provide Workmen's Compensation Insurance, including occupational disease provisions for all of the latter's employees unless such employees are covered by the protection afforded by the Seller. In case any class of employees engaged in hazardous work under this contract at the site of the project is not protected under Workmen's Compensation statute, the Seller shall provide, and shall cause each subcontractor to provide, adequate and suitable insurance for the protection of his employees not otherwise protected.

2. Seller's General Liability and Property Damage Insurance, including vehicle coverage issued to the Contractor and protecting him from all claims for personal injury, including death, and all claims for destruction of or damage to property, arising out of or in connection with any operations under the Contract Documents, whether such operations be by himself or by any subcontractor under him, or anyone directly or indirectly employed by the Contractor or by a subcontractor under him. The insurance shall be written with a limit of liability of $2,000,000 for all damages arising out of bodily injury, including death, at any time resulting there from, sustained by any one person in any one accident; and a limit of liability of $2,000,000 aggregate for any such damages sustained by two or more persons in any one accident. Insurance shall be written with a limit of liability of $2,000,000 for all property damage sustained by any one person in any one accident; and a limit of liability of $2,000,000 aggregate for any such damage sustained by two or more persons in any one accident.

Copyright© 2019 National Society of Professional Engineers, American Council of Engineering Companies, and American Society of Civil Engineers. All rights reserved.

3. Professional Liability (if the Special Services include professional services):

Seller's Professional Liability	Policy limits
Each Claim	$2,000,000
Annual Aggregate	$2,000,000

I. Seller shall deliver to Buyer, with copies to each additional insured identified in these Supplementary Conditions, certificates of insurance which Seller is required to purchase and maintain.

ARTICLE 6—LICENSES AND FEES

6.01 Intellectual Property and License Fees

SC 6.01 Replace paragraph 6.01 in its entirety with the following:

A. Unless specifically stated elsewhere in the Contract Documents, Seller is not transferring any intellectual property rights, patent rights, or licenses for the Goods delivered. However, in the event the Seller is manufacturing to Buyer's design, Buyer retains all intellectual property rights in such design excluding Seller's proprietary intellectual property and any improvements to Seller's proprietary intellectual property which shall be and remain the sole and exclusive property of Seller.

B. Seller shall pay all license fees and royalties and assume all costs incident to the use or the furnishing of the Goods, unless specified otherwise by the Contract Documents. Seller grants to Buyer a non-exclusive, non-terminable, royalty free license to use the intellectual property embedded in Equipment delivered to and paid for by the Buyer, as well as any drawings, design or data delivered to and paid for by the Buyer, for the purposes of owning, financing, using, operating and maintaining the relevant Equipment at the Project site. Such license may only be assigned to a future owner of the Equipment or to an operations and maintenance subcontractor. Such license does not extend to the re-creation of the Equipment or the manufacture of spares or consumables by Buyer or third parties.

C. Any software Seller owns and provides pursuant to this Contract shall remain Seller's property. Seller provides to Buyer a limited, non-exclusive and terminable royalty free project-specific license to such software for the term of this Contract. Buyer agrees not to copy, sub-license, translate, transfer, reverse engineer, or decode the software. Unless otherwise expressly agreed by Seller, this license shall terminate and the software shall be returned to Seller upon termination of this Contract, or the material breach of the terms in this section.

D. Both parties agree to keep confidential the other party's proprietary non-public information, if any, which may be acquired in connection with this Contract. Buyer will not, without Seller's advance written consent, subject Equipment to testing, analysis, or any type of reverse engineering. Seller retains all intellectual property rights including copyright which it has in all drawings and data or other deliverables supplied or developed under this Contract. Buyer acknowledges that Seller is in the business of selling the Equipment subject to this Contract and agrees that it will not file patent applications on the Equipment, or processes and methods of using the Equipment, without Seller's express written permission. Buyer further agrees that in any

Copyright© 2019 National Society of Professional Engineers, American Council of Engineering Companies, and American Society of Civil Engineers. All rights reserved.

event any such patents will not be asserted against Seller or its other Buyers based upon purchase and use of such Equipment.

ARTICLE 7—SELLER'S RESPONSIBILITIES

7.03 *Laws and Regulations*

7.04 *"Or Equals"*

7.05 *Taxes*

SC-7.05 Add a new paragraph immediately after Paragraph 7.05.A:

B. Buyer is exempt from payment of sales and compensating use taxes of the State of **New York** and of cities and counties thereof on all materials and equipment to be incorporated into the Project facilities.

1. Buyer will furnish the required certificates of tax exemption to Seller with respect to materials and equipment to be incorporated into the Project facilities.

2. Buyer's exemption does not apply to construction tools, machinery, equipment, or other property purchased by or leased by Seller, or to supplies or materials not incorporated into the Project facilities.

3. The Procurement Contract Price does not include the cost of sales or compensating use taxes to the extent such are exempted by this paragraph.

7.07 *Indemnification*

SC-7.07 Replace paragraph 7.07A in its entirety with the following:

A. To the fullest extent permitted by Laws and Regulations, Seller shall indemnify and hold harmless Buyer, Engineer, Project Owner, and any assignee of Buyer, including Contractor/Assignee, and their officers, directors, members, partners, employees, agents, consultants, contractors, and subcontractors, from and against all claims, costs, losses, and damages (including but not limited to all fees and charges of engineers, architects, attorneys, and other professionals and all court or arbitration or other dispute resolution costs) to the extent arising out of or relating to the performance of Seller's obligations under the Procurement Contract, provided that any such claim, cost, loss or damage is attributable to bodily injury, sickness, disease, or death, or to injury to or destruction of tangible third-party property (other than the Goods themselves), but only to the extent caused by any negligent act or omission of Seller, or any individual or entity directly or indirectly employed by Seller or anyone for whose acts Seller may be liable.

ARTICLE 8—SHIPPING AND DELIVERY

No suggested Supplementary Conditions in this Article.

Copyright© 2019 National Society of Professional Engineers, American Council of Engineering Companies, and American Society of Civil Engineers. All rights reserved.

ARTICLE 9—BUYER'S RIGHTS

9.01

SC 9.01 Add the following paragraph after 9.01.C.4:

A. Improper handling, storage, installation, or commissioning of the Equipment by Buyer or third parties, to the extent Buyer or third parties are made aware of same, in writing, by Seller.

9.02 *Limitation of Seller's Liability*

9.04 *Correction Period*

SC-9.04.B Replace paragraph 9.04B in its entirety with the following:

B. Warranty repair, replacement or re-performance by Seller shall not extend or renew the applicable warranty period of the Work, except for malfunction of material or equipment more than two (2) times under the Work that shall be caused for replacement by Seller of the affected equipment with a redesigned component and extension of the Warranty Period for that equipment of the Work for a period of twelve (12) months from completion of the required warranty work.

SC-9.04.C Replace paragraph 9.04C in its entirety with the following:

C. The warranties and remedies set forth in this article are in lieu of and exclude all other warranties and remedies, statutory, express or implied, for a specified purpose.

SC-9.05 Add the following new paragraph after Paragraph 9.04:

9.05 *Limitation of Seller's Liability*

A. Notwithstanding anything else contained in this Agreement, to the maximum extent permitted by law, and regardless of whether a claim is based in contract (including warranty or indemnity), extra-contractual liability, tort (including negligence or strict liability), statue, equity or any other legal theory; Buyer and Seller agree that the total liability of Seller to Buyer for claims, costs, losses, and damages arising from this Procurement Contract will be limited to the amount established in the Procurement Agreement as the Procurement Contract Price.

B. Upon assignment the terms of this Paragraph 9.05 will be binding upon both the assignor and assignee with respect to Seller's liability, The terms of this limitation do not apply to or limit any claim by Buyer against Seller based on any of the following: (a) contribution or indemnification with respect to third-party claims, losses, and damages; (b) costs, losses, or damages attributable to personal or bodily injury, sickness, disease, or death, or to injury to or destruction of the tangible property of others, (c) intentional or reckless wrongful conduct, or (d) rights conferred by any bond provided by Seller under this Contract.

C. In no event shall either party be liable for any loss of profit or revenues, loss of production, loss of use of equipment or services or any associated equipment, interruption of business, cost of capital, cost of replacement water or power, downtime costs, increased operating costs, claims of company's customers for such damages, or for any special, consequential, incidental, indirect, punitive or exemplary damages.

Copyright© 2019 National Society of Professional Engineers, American Council of Engineering Companies, and American Society of Civil Engineers. All rights reserved.

9.06 Buyer's Responsibilities

SC 9.06 Add the following new paragraph after Paragraph 9.05:

A. Unless otherwise stipulated in the Contract, the unloading, handling, storage and installation of the Equipment shall be the responsibility of the Buyer. Seller will not control the actual operation of either Buyer's systems or the Equipment at the Site. Buyer shall also:

1. provide Seller with complete and accurate data concerning all relevant conditions at the Site, including but not limited to any existing Buyer facility, equipment or processes, influent water or other substances to be treated or measured with the Equipment;

2. operate and maintain its facility and all related systems in good operating condition and within the agreed parameters or, if no parameters have been agreed, within generally accepted industry practice;

3. operate and maintain the Equipment in accordance with Seller's operations and maintenance manuals or where such manuals are silent, in accordance with generally accepted industry practice.

If Buyer's fails to fulfill the foregoing obligations, Seller shall be relieved of any obligations with respect to warranties or any other commitments under the Contract, and Seller shall have no liability for any loss, damage or injury which Buyer may sustain as a result.

ARTICLE 10—ENGINEER'S STATUS

No suggested Supplementary Conditions in this Article.

ARTICLE 11—CHANGES

No suggested Supplementary Conditions in this Article.

ARTICLE 12—CLAIMS, DISPUTES, AND DISPUTE RESOLUTION

No suggested Supplementary Conditions for this Article.

ARTICLE 13—PAYMENT

No suggested Supplementary Conditions in this Article.

ARTICLE 14—CANCELLATION, SUSPENSION, AND TERMINATION

No suggested Supplementary Conditions in this Article.

ARTICLE 15—MISCELLANEOUS

Copyright© 2019 National Society of Professional Engineers, American Council of Engineering Companies, and American Society of Civil Engineers. All rights reserved.

TECHNICAL SPECIFICATIONS

SECTION 013300 – SUBMITTAL PROCEDURES

PART 1 – GENERAL

1.1 SUMMARY

A. This Section includes administrative and procedural requirements for submitting Design Submittals, Shop Drawings, Product Data, Samples, and other miscellaneous submittals.

1.2 DEFINITIONS

A. Action Submittals: Written and graphic information that requires Engineer's responsive action.

B. Informational Submittals: Written information that does not require Engineer's approval. Submittals may be rejected for not complying with requirements.

C. File Transfer Protocol (FTP): Communications protocol that enables transfer of files to and from another computer over a network and that serves as the basis for standard Internet protocols. An FTP site is a portion of a network located outside of network firewalls within which internal and external users are able to access files.

D. Portable Document Format (PDF): An open standard file format licensed by Adobe Systems used for representing documents in a device-independent and display resolution-independent fixed-layout document format.

1.3 SUBMITTAL ADMINISTRATIVE REQUIREMENTS:

A. Engineer's Digital Data Files: Electronic digital data files of the Contract Documents will be provided by Engineer upon request for Supplier's use in preparing submittals.

B. Coordination: Coordinate preparation and processing of submittals with performance of construction activities.
   1. Coordinate each submittal with fabrication, purchasing, testing, delivery, other submittals, and related activities that require sequential activity.
   2. Submit all submittal items required for each Specification Section concurrently unless partial submittals for portions of the Work are indicated on approved submittal schedule.
   3. Submit action submittals and informational submittals required by the same Specification Section as separate packages under separate transmittals.
   4. Coordinate transmittal of different types of submittals for related parts of the Work so processing will not be delayed because of need to review submittals concurrently for coordination.
      a. Engineer reserves the right to withhold action on a submittal requiring coordination with other submittals until related submittals are received.

C. Processing Time: Allow time for submittal review, including time for resubmittals, as follows. Time for review shall commence on Engineer's receipt of submittal. No extension of the Contract Time will be authorized because of failure to transmit submittals enough in advance of the Work to permit processing, including resubmittals.
   1. Initial Review: Allow 15 days for initial review of each submittal. Allow additional time if coordination with subsequent submittals is required. Engineer will advise Supplier when a submittal being processed must be delayed for coordination.

2. Intermediate Review: If intermediate submittal is necessary, process it in same manner as initial submittal.
3. Resubmittal Review: Allow 15 days for review of each resubmittal.

D. Electronic Submittals: Identify and incorporate information in each electronic submittal file as follows:
1. Assemble complete submittal package into a single indexed file incorporating submittal requirements of a single Specification Section and transmittal form with links enabling navigation to each item.
2. Name file with submittal number or other unique identifier, including revision identifier.
a. File name shall use project identifier and Specification Section number followed by a decimal point and then a sequential number (e.g., LNHS-061000.01). Resubmittals shall include an alphabetic suffix after another decimal point (e.g., LNHS-061000.01.A).
3. Provide means for insertion to permanently record Supplier's review and approval markings and action taken by Engineer.
4. Transmittal Form for Electronic Submittals: Use electronic form acceptable to Owner**,** containing the following information:
a. Project name.
b. Date.
c. Name and address of Engineer.
d. Name of Supplier.
e. Name of firm or entity that prepared submittal.
f. Category and type of submittal.
g. Submittal purpose and description.
h. Specification Section number and title.
i. Specification paragraph number or drawing designation and generic name for each of multiple items.
j. Drawing number and detail references, as appropriate.
k. Location(s) where product is to be installed, as appropriate.
l. Related physical samples submitted directly.
m. Indication of full or partial submittal.
n. Transmittal number.
o. Submittal and transmittal distribution record.
p. Other necessary identification.
q. Remarks.
5. Metadata: Include the following information as keywords in the electronic submittal file metadata:
a. Project name.
b. Number and title of appropriate Specification Section.
c. Supplier name.
d. Product name.

E. Options: Identify options requiring selection by Engineer.

F. Submittals for Utilizing Web-Based Project Management Software: Prepare submittals as PDF files, or other format indicated by Project management software.

G. Deviations and Additional Information: On an attached separate sheet, prepared on Supplier's letterhead, record relevant information, requests for data, revisions other than those requested by Engineer on previous submittals, and deviations from requirements in the Contract Documents,

including minor variations and limitations. Include same identification information as related submittal.

H. Resubmittals: Make resubmittals in same form and number of copies as initial submittal.
   1. Note date and content of previous submittal.
   2. Note date and content of revision in label or title block and clearly indicate extent of revision.
   3. Resubmit submittals until they are marked with approval notation from Engineer's action stamp.

I. Distribution: Furnish copies of final submittals to manufacturers, subcontractors, suppliers, fabricators, installers, authorities having jurisdiction, and others as necessary for performance of activities. Show distribution on transmittal forms.

PART 2 – PRODUCTS

2.1 SUBMITTAL PROCEDURES

A. General Submittal Procedure Requirements: Prepare and submit submittals required by individual Specification Sections. Types of submittals are indicated in individual Specification Sections.
   1. Post electronic submittals as PDF electronic files directly to Engineer's FTP site specifically established for Project.
      a. Engineer will return annotated file. Annotate and retain one copy of file as an electronic Project record document file.
   2. Submit electronic submittals via email as PDF electronic files.
      a. Engineer will return annotated file. Annotate and retain one copy of file as an electronic Project record document file.
   3. Action Submittals: Submit electronic submittals.
   4. Informational Submittals: Submit 2 paper copies of each submittal unless otherwise indicated. Engineer will not return copies.
   5. Certificates and Certifications Submittals: Provide a statement that includes signature of entity responsible for preparing certification. Certificates and certifications shall be signed by an officer or other individual authorized to sign documents on behalf of that entity.
      a. Provide a digital signature with digital certificate on electronically submitted certificates and certifications where indicated.
      b. Provide a notarized statement on original paper copy certificates and certifications where indicated.

B. Product Data: Collect information into a single submittal for each element of construction and type of product or equipment.
   1. If information must be specially prepared for submittal because standard published data are not suitable for use, submit as Shop Drawings, not as Product Data.
   2. Mark each copy of each submittal to show which products and options are applicable.
   3. Include the following information, as applicable:
      a. Manufacturer's catalog cuts.
      b. Manufacturer's product specifications.
      c. Standard color charts.
      d. Statement of compliance with specified referenced standards.
      e. Testing by recognized testing agency.
      f. Application of testing agency labels and seals.
      g. Notation of coordination requirements.

h. Availability and delivery time information.

4. For equipment, include the following in addition to the above, as applicable:
   a. Wiring diagrams showing factory-installed wiring.
   b. Printed performance curves.
   c. Operational range diagrams.
   d. Clearances required to other construction, if not indicated on accompanying Shop Drawings.
5. Submit Product Data before or concurrent with Samples.
6. Submit Product Data in the following format:
   a. PDF electronic file.

C. Shop Drawings: Prepare Project-specific information, drawn accurately to scale. Do not base Shop Drawings on reproductions of the Contract Documents or standard printed data.

1. Preparation: Fully illustrate requirements in the Contract Documents. Include the following information, as applicable:
   a. Identification of products.
   b. Schedules.
   c. Compliance with specified standards.
   d. Notation of coordination requirements.
   e. Notation of dimensions established by field measurement.
   f. Relationship and attachment to adjoining construction clearly indicated.
   g. Seal and signature of professional engineer if specified.
2. Sheet Size: Except for templates, patterns, and similar full-size drawings, submit Shop Drawings on sheets at least 8-1/2 by 11 inches (215 by 280 mm), but no larger than 22 by 34 inches (750 by 1067 mm).
3. Submit Shop Drawings in the following format:
   a. PDF electronic file.
4. BIM File Incorporation: Develop and incorporate Shop Drawing files into Building Information Model established for Project.
   a. Prepare Shop Drawings in the following format: Same digital data software program, version, and operating system as the original Drawings.

D. Samples: Submit Samples for review of kind, color, pattern, and texture for a check of these characteristics with other elements and for a comparison of these characteristics between submittal and actual component as delivered and installed.

1. Transmit Samples that contain multiple, related components such as accessories together in one submittal package.
2. Identification: Attach label on unexposed side of Samples that includes the following:
   a. Generic description of Sample.
   b. Product name and name of manufacturer.
   c. Sample source.
   d. Number and title of applicable Specification Section.
   e. Specification paragraph number and generic name of each item.
3. For projects where electronic submittals are required, provide corresponding electronic submittal of Sample transmittal, digital image file illustrating Sample characteristics, and identification information for record.

a. Samples that may be incorporated into the Work are indicated in individual Specification Sections. Such Samples must be in an undamaged condition at time of use.
b. Samples not incorporated into the Work, or otherwise designated as Owner's property, are the property of Supplier.

4. Samples for Initial Selection: Submit manufacturer's color charts consisting of units or sections of units showing the full range of colors, textures, and patterns available.
   a. Number of Samples: Submit 1 full set of available choices where color, pattern, texture, or similar characteristics are required to be selected from manufacturer's product line. Engineer will return submittal with options selected.

E. Product Schedule: As required in individual Specification Sections, prepare a written summary indicating types of products required for the Work and their intended location. Include the following information in tabular form:
1. Type of product. Include unique identifier for each product indicated in the Contract Documents or assigned by Supplier if none is indicated.
2. Manufacturer and product name, and model number if applicable.
3. Number and name of room or space.
4. Location within room or space.
5. Submit product schedule in the following format:
   a. PDF electronic file.

F. Test and Inspection Reports and Schedule of Tests and Inspections Submittals: Comply with requirements specified in Division 01 Section "Quality Requirements."

G. Maintenance Data: Comply with requirements specified in Division 01 Section "Operation and Maintenance Data."

H. Qualification Data: Prepare written information that demonstrates capabilities and experience of firm or person. Include lists of completed projects with project names and addresses, contact information of Engineers and owners, and other information specified.

I. Welding Certificates: Prepare written certification that welding procedures and personnel comply with requirements in the Contract Documents. Submit record of Welding Procedure Specification and Procedure Qualification Record on AWS forms. Include names of firms and personnel certified.

J. Installer Certificates: Submit written statements on manufacturer's letterhead certifying that Installer complies with requirements in the Contract Documents and, where required, is authorized by manufacturer for this specific Project.

K. Manufacturer Certificates: Submit written statements on manufacturer's letterhead certifying that manufacturer complies with requirements in the Contract Documents. Include evidence of manufacturing experience where required.

L. Product Certificates: Submit written statements on manufacturer's letterhead certifying that product complies with requirements in the Contract Documents.

M. Material Certificates: Submit written statements on manufacturer's letterhead certifying that material complies with requirements in the Contract Documents.

N. Material Test Reports: Submit reports written by a qualified testing agency, on testing agency's standard form, indicating and interpreting test results of material for compliance with requirements in the Contract Documents.

O. Product Test Reports: Submit written reports indicating that current product produced by manufacturer complies with requirements in the Contract Documents. Base reports on evaluation of tests performed by manufacturer and witnessed by a qualified testing agency, or on comprehensive tests performed by a qualified testing agency.

P. Research Reports: Submit written evidence, from a model code organization acceptable to authorities having jurisdiction, that product complies with building code in effect for Project. Include the following information:

1. Name of evaluation organization.
2. Date of evaluation.
3. Time period when report is in effect.
4. Product and manufacturers' names.
5. Description of product.
6. Test procedures and results.
7. Limitations of use.

Q. Preconstruction Test Reports: Submit reports written by a qualified testing agency, on testing agency's standard form, indicating and interpreting results of tests performed before installation of product, for compliance with performance requirements in the Contract Documents.

R. Compatibility Test Reports: Submit reports written by a qualified testing agency, on testing agency's standard form, indicating and interpreting results of compatibility tests performed before installation of product. Include written recommendations for primers and substrate preparation needed for adhesion.

S. Field Test Reports: Submit written reports indicating and interpreting results of field tests performed either during installation of product or after product is installed in its final location, for compliance with requirements in the Contract Documents.

T. Design Data: Prepare and submit written and graphic information, including, but not limited to, performance and design criteria, list of applicable codes and regulations, and calculations. Include list of assumptions and other performance and design criteria and a summary of loads. Include load diagrams if applicable. Provide name and version of software, if any, used for calculations. Include page numbers.

2.2 DELEGATED-DESIGN SERVICES

A. Performance and Design Criteria: Where professional design services or certifications by a design professional are specifically required of Supplier by the Contract Documents, provide products and systems complying with specific performance and design criteria indicated.

1. If criteria indicated are not sufficient to perform services or certification required, submit a written request for additional information to Engineer.

B. Delegated-Design Services Certification: In addition to Shop Drawings, Product Data, and other required submittals, submit digitally signed PDF electronic file of certificate, signed and sealed by the responsible design professional, for each product and system specifically assigned to Supplier to be designed or certified by a design professional.

1. Indicate that products and systems comply with performance and design criteria in the Contract Documents. Include list of codes, loads, and other factors used in performing these services.

C. BIM File Incorporation: Engineer delegated-design drawing and data files into Building Information Model established for Project.

1. Prepare delegated-design drawings in the following format: Revit.

PART 3 – EXECUTION

3.1 SUPPLIER'S REVIEW

A. Review each submittal and check for compliance with the Contract Documents. Note corrections and field dimensions. Mark with approval stamp before submitting to Engineer.

B. Approval Stamp: Stamp each submittal with a uniform, approval stamp. Include Project name and location, submittal number, Specification Section title and number, name of reviewer, date of Supplier's approval, and statement certifying that submittal has been reviewed, checked, and approved for compliance with the Contract Documents.

3.2 ENGINEER'S ACTION

A. General: Engineer will not review submittals that do not bear Supplier's approval stamp and will return them without action.

B. Action Submittals: Engineer will review each submittal, make marks to indicate corrections or modifications required, and return it. Engineer will stamp each submittal with an action stamp and will mark stamp appropriately to indicate action taken, as follows:

1. Final Unrestricted Release: Where submittals are marked "No Exceptions Taken," that part of the Work covered by the submittal may proceed provided it complies with requirements of the Contract Documents; final acceptance will depend upon that compliance.
2. Final-But-Restricted Release: When submittals are marked "Make Corrections Noted," that part of the Work covered by the submittal may proceed provided it complies with notations or corrections on the submittal and requirements of the Contract Documents; final acceptance will depend on that compliance.
3. Returned for Resubmittal: When submittal is marked "Revise and Resubmit," "Rejected," or "Submit Specified Item," do not proceed with that part of the Work covered by the submittal, including purchasing, fabrication, delivery, or other activity. Revise or prepare a new submittal in accordance with the notations; resubmit without delay. Repeat if necessary to obtain a different action mark.
    a. Do not permit submittals marked "Revise and Resubmit," "Rejected," or "Submit Specified Item" to be used at the Project site, or elsewhere where Work is in progress.
4. Other Action: Where a submittal is primarily for information or record purposes, special processing or other activity, the submittal will be returned, marked "Action Not Required."

C. Informational Submittals: Engineer will review each submittal and will not return it or will reject and return it if it does not comply with requirements. Engineer will forward each submittal to appropriate party.

D. Submittals not required by the Contract Documents will not be reviewed and may be discarded.

END OF SECTION

SECTION 014000 – QUALITY REQUIREMENTS

PART 1 – GENERAL

1.1 SUMMARY

A. This Section includes administrative and procedural requirements for quality assurance and quality control.

B. Testing and inspecting services are required to verify compliance with requirements specified or indicated. These services do not relieve Seller of responsibility for compliance with the Contract Document requirements.

1. Specific quality-control requirements for individual construction activities are specified in the Sections that specify those activities. Requirements in those Sections may also cover production of standard products.
2. Specified tests, inspections, and related actions do not limit Seller's quality-control procedures that facilitate compliance with the Contract Document requirements.
3. Requirements for Seller to provide quality-control services required by Engineer, Owner, or authorities having jurisdiction are not limited by provisions of this Section.

1.2 DEFINITIONS

A. Quality-Assurance Services: Activities, actions, and procedures performed before and during execution of the Work to guard against defects and deficiencies and ensure that proposed construction complies with requirements.

B. Quality-Control Services: Tests, inspections, procedures, and related actions during and after execution of the Work to evaluate that completed construction complies with requirements. Services do not include contract enforcement activities performed by Engineer.

C. Testing Agency: An entity engaged to perform specific tests, inspections, or both. Testing laboratory shall mean the same as testing agency.

1.3 DELEGATED DESIGN

A. Performance and Design Criteria: Where professional design services or certifications by a design professional are specifically required of Supplier by the Contract Documents, provide products and systems complying with specific performance and design criteria indicated.

1. If criteria indicated are not sufficient to perform services or certification required, submit a written request for additional information to Engineer.

1.4 SUBMITTALS

A. Qualification Data: For testing agencies specified in "Quality Assurance" Article to demonstrate their capabilities and experience. Include proof of qualifications in the form of a recent report on the inspection of the testing agency by a recognized authority.

B. Delegated-Design Submittal: In addition to Shop Drawings, Product Data, and other required submittals, submit a statement, signed and sealed by the responsible design professional, for each product and system specifically assigned to Supplier to be designed or certified by a design professional, indicating that the products and systems are in compliance with performance and design criteria indicated. Include list of codes, loads, and other factors used in performing these services.

C. Schedule of Tests and Inspections: Prepare in tabular form and include the following:
   1. Specification Section number and title.
   2. Description of test and inspection.
   3. Identification of applicable standards.
   4. Identification of test and inspection methods.
   5. Number of tests and inspections required.
   6. Time schedule or time span for tests and inspections.
   7. Entity responsible for performing tests and inspections.
   8. Requirements for obtaining samples.
   9. Unique characteristics of each quality-control service.

D. Reports: Prepare and submit certified written reports that include the following:
   1. Date of issue.
   2. Project title and number.
   3. Name, address, and telephone number of testing agency.
   4. Dates and locations of samples and tests or inspections.
   5. Names of individuals making tests and inspections.
   6. Description of the Work and test and inspection method.
   7. Identification of product and Specification Section.
   8. Complete test or inspection data.
   9. Test and inspection results and an interpretation of test results.
   10. Ambient conditions at time of sample taking and testing and inspecting.
   11. Comments or professional opinion on whether tested or inspected Work complies with the Contract Document requirements.
   12. Name and signature of laboratory inspector.
   13. Recommendations on retesting and reinspecting.

E. Permits, Licenses, and Certificates: For Owner's records, submit copies of permits, licenses, certifications, inspection reports, releases, jurisdictional settlements, notices, receipts for fee payments, judgments, correspondence, records, and similar documents, established for compliance with standards and regulations bearing on performance of the Work.

1.5 QUALITY ASSURANCE

A. Fabricator Qualifications: A firm experienced in producing products similar to those indicated for this Project and with a record of successful in-service performance, as well as sufficient production capacity to produce required units.

B. Factory-Authorized Service Representative Qualifications: An authorized representative of manufacturer who is trained and approved by manufacturer to inspect installation of manufacturer's products that are similar in material, design, and extent to those indicated for this Project.

C. Manufacturer Qualifications: A firm experienced in manufacturing products or systems similar to those indicated for this Project and with a record of successful in-service performance.

D. Professional Engineer Qualifications: A professional engineer who is legally qualified to practice in jurisdiction where Project is located and who is experienced in providing engineering services of the kind indicated. Engineering services are defined as those performed for installations of the system, assembly, or products that are similar to those indicated for this Project in material, design, and extent.

E. Specialists: Certain sections of the Specifications require that specific construction activities shall be performed by entities who are recognized experts in those operations. Specialists shall satisfy qualification requirements indicated and shall be engaged for the activities indicated.
   1. Requirement for specialists shall not supersede building codes and similar regulations governing the Work, nor interfere with local trade-union jurisdictional settlements and similar conventions.

F. Testing Agency Qualifications: An agency with the experience and capability to conduct testing and inspecting indicated, as documented by ASTM E548, and that specializes in types of tests and inspections to be performed. Each testing agency shall be authorized by the authorities having jurisdiction in the state in which the project is located.

G. Preconstruction Testing: Testing agency shall perform preconstruction testing for compliance with specified requirements for performance and test methods.
   1. Testing Agency Responsibilities: Submit a certified written report of each test, inspection, and similar quality-assurance service to Engineer with copy to Seller. Interpret tests and inspections and state in each report whether tested and inspected work complies with or deviates from the Contract Documents.

1.6 QUALITY CONTROL

A. Owner Responsibilities: Where quality-control services are indicated as Owner's responsibility, Owner will engage a qualified testing agency to perform these services.
   1. Owner will furnish Supplier with names, addresses, and telephone numbers of testing agencies engaged and a description of the types of testing and inspecting they are engaged to perform.
   2. Payment for these services shall be included in Bid Form.
   3. Costs for retesting and reinspecting construction that replaces or is necessitated by work that failed to comply with the Contract Documents will be charged to Supplier**,** and the Contract Sum will be adjusted by Change Order.

B. Supplier Responsibilities: Unless otherwise indicated, provide quality-control services specified and required by authorities having jurisdiction.
   1. Where services are indicated as Supplier's responsibility, engage a qualified testing agency to perform these quality-control services.
   2. Notify testing agencies at least 24 hours in advance of time when Work that requires testing or inspecting will be performed.
   3. Where quality-control services are indicated as Supplier's responsibility, submit a certified written report, in duplicate, of each quality-control service.
   4. Testing and inspecting requested by Supplier and not required by the Contract Documents are Supplier's responsibility.
   5. Submit additional copies of each written report directly to authorities having jurisdiction, when they so direct.

C. Special Tests and Inspections: Owner will engage a testing agency to conduct special tests and inspections required by authorities having jurisdiction as the responsibility of Owner.
   1. Testing agency will notify Engineer and Seller promptly of irregularities and deficiencies observed in the Work during performance of its services.
   2. Testing agency will submit a certified written report of each test, inspection, and similar quality-control service to Engineer with copy to Seller and to authorities having jurisdiction.
   3. Testing agency will submit a final report of special tests and inspections at Substantial Completion, which includes a list of unresolved deficiencies.

4. Testing agency will interpret tests and inspections and state in each report whether tested and inspected work complies with or deviates from the Contract Documents.
5. Testing agency will retest and reinspect corrected work.

D. Supplier's Field Services: Where indicated, engage a factory-authorized service representative to inspect field-assembled components and equipment installation, including service connections. Report results in writing.

E. Retesting/Reinspecting: Regardless of whether original tests or inspections were Supplier's responsibility, provide quality-control services, including retesting and reinspecting, for construction that revised or replaced Work that failed to comply with requirements established by the Contract Documents.

F. Testing Agency Responsibilities: Cooperate with Engineer and Supplier in performance of duties. Provide qualified personnel to perform required tests and inspections.
1. Notify Engineer and Supplier promptly of irregularities or deficiencies observed in the Work during performance of its services.
2. Interpret tests and inspections and state in each report whether tested and inspected work complies with or deviates from requirements.
3. Submit a certified written report, in duplicate, of each test, inspection, and similar quality-control service through Supplier.
4. Do not release, revoke, alter, or increase requirements of the Contract Documents or approve or accept any portion of the Work.
5. Do not perform any duties of Supplier.

G. Associated Services: Cooperate with agencies performing required tests, inspections, and similar quality-control services and provide reasonable auxiliary services as requested. Notify agency sufficiently in advance of operations to permit assignment of personnel. Provide the following:
1. Access to the Work.
2. Incidental labor and facilities necessary to facilitate tests and inspections.
3. Adequate quantities of representative samples of materials that require testing and inspecting. Assist agency in obtaining samples.
4. Facilities for storage and field-curing of test samples.
5. Delivery of samples to testing agencies.
6. Preliminary design mix proposed for use for material mixes that require control by testing agency.
7. Security and protection for samples and for testing and inspecting equipment at Project site.

H. Coordination: Coordinate sequence of activities to accommodate required quality-assurance and quality-control services with a minimum of delay and to avoid necessity of removing and replacing construction to accommodate testing and inspecting.
1. Schedule times for tests, inspections, obtaining samples, and similar activities.

I. Schedule of Tests and Inspections: Prepare a schedule of tests, inspections, and similar quality-control services required by the Contract Documents. Submit schedule within [30] days of date established for commencement of the Work (i.e., Notice to Proceed).
1. Distribution: Distribute schedule to Owner, Engineer, testing agencies, and each party involved in performance of portions of the Work where tests and inspections are required.

PART 2 – PRODUCTS (Not Used)

PART 3 – EXECUTION (Not used)

END OF SECTION

SECTION 016000 – PRODUCT REQUIREMENTS

PART 1 – GENERAL

1.1 SUMMARY

A. This Section includes the following administrative and procedural requirements: selection of products for use in Project; product delivery, storage, and handling; manufacturers' standard warranties on products; special warranties; product substitutions; and comparable products.

1.2 DEFINITIONS

A. Products: Items purchased for incorporating into the Work, whether purchased for Project or taken from previously purchased stock. The term "product" includes the terms "material," "equipment," "system," and terms of similar intent.
   1. Named Products: Items identified by manufacturer's product name, including make or model number or other designation, shown or listed in manufacturer's published product literature that is current as of date of the Contract Documents.
   2. New Products: Items that have not previously been incorporated into another project or facility. Products salvaged or recycled from other projects are not considered new products.
   3. Comparable Product: Product that is demonstrated and approved through submittal process, or where indicated as a product substitution, to have the indicated qualities related to type, function, dimension, in-service performance, physical properties, appearance, and other characteristics that equal or exceed those of specified product.

B. Substitutions: Changes in products, materials, equipment, and methods of construction from those required by the Contract Documents and proposed by Supplier.

C. Basis-of-Design Product Specification: Where a specific manufacturer's product is named or accompanied by the words "basis of design," including make or model number or other designation, to establish the significant qualities related to type, function, dimension, in-service performance, physical properties, appearance, and other characteristics for purposes of evaluating comparable products of other named manufacturers.

D. Supplier's Warranty: Preprinted written warranty published by individual manufacturer for a particular product and specifically endorsed by manufacturer to Owner.

E. Special Warranty: Written warranty required by or incorporated into the Contract Documents, either to extend time limit provided by Supplier's warranty or to provide more rights for Owner.

1.3 SUBMITTALS

A. Product List: Submit a list, in tabular from, showing specified products. Include generic names of products required. Include manufacturer's name and proprietary product names for each product.
   1. Coordinate product list with the Submittals Schedule.
   2. Form: Tabulate information for each product under the following column headings:
      a. Specification Section number and title.
      b. Generic name used in the Contract Documents.
      c. Proprietary name, model number, and similar designations.
      d. Manufacturer's name and address.
      e. Supplier's name and address.

f. Installer's name and address.
g. Projected delivery date or time span of delivery period.
h. Identification of items that require early submittal approval for scheduled delivery date.

B. Basis-of-Design Product Specification Submittal: Comply with requirements in Division 1 Section "Submittal Procedures." Show compliance with requirements.

C. Warranty and Bond Submittals: Submit written warranties to the Engineer prior to the date certified for Substantial Completion. If the Engineer's Certificate of Substantial Completion designates a commencement date for warranties other than the date of Substantial Completion for the Work, or a designated portion of the Work, submit written warranties upon request of the Engineer.

1.4 QUALITY ASSURANCE

A. Compatibility of Options: If Seller is given option of selecting between two or more products for use on Project, product selected shall be compatible with products previously selected, even if previously selected products were also options.

B. Source Limitations: To the fullest extent possible, provide products of the same kind, from a single source.
1. When specified products are available only from sources that do not or cannot produce a quantity adequate to complete project requirements in a timely manner, consult with the Engineer for a determination of the most important product qualities before proceeding. Qualities may include attributes relating to visual appearance, strength, durability, or compatibility. When a determination has been made, select products from sources that produce products that possess these qualities, to the fullest extent possible.

1.5 PRODUCT DELIVERY, STORAGE, AND HANDLING

A. Deliver, store, and handle products using means and methods that will prevent damage, deterioration, and loss, including theft. Comply with manufacturer's written instructions.
1. Schedule delivery to minimize long-term storage at Project site and to prevent overcrowding of construction spaces.
2. Coordinate delivery with installation time to ensure minimum holding time for items that are flammable, hazardous, easily damaged, or sensitive to deterioration, theft, and other losses.
3. Deliver products to Project site in an undamaged condition in manufacturer's original sealed container or other packaging system, complete with labels and instructions for handling, storing, unpacking, protecting, and installing.
4. Inspect products on delivery to ensure compliance with the Contract Documents and to ensure that products are undamaged and properly protected.
5. Store products to allow for inspection and measurement of quantity or counting of units.
6. Store materials in a manner that will not endanger Project structure.
7. Store products that are subject to damage by the elements, under cover in a weathertight enclosure above ground, with ventilation adequate to prevent condensation.
8. Comply with product manufacturer's written instructions for temperature, humidity, ventilation, and weather-protection requirements for storage.
9. Protect stored products from damage.

1.6 PRODUCT WARRANTIES

A. Warranties specified in other Sections shall be in addition to, and run concurrent with, other warranties required by the Contract Documents. Manufacturer's disclaimers and limitations on product warranties do not relieve Seller of obligations under requirements of the Contract Documents.

B. Special Warranties: Prepare a written document that contains appropriate terms and identification, ready for execution. Submit a draft for approval before final execution.
   1. Manufacturer's Standard Form: Modified to include Project-specific information and properly executed.

C. Warranty Requirements: Related Damages and Losses: When correcting warranted Work that has failed, remove and replace other Work that has been damaged as a result of such failure or that must be removed and replaced to provide access for correction of warranted Work.
   1. Reinstatement of Warranty: When Work covered by a warranty has failed and been corrected by replacement or rebuilding, reinstate the warranty by written endorsement. The reinstated warranty shall be equal to the original warranty with an equitable adjustment for depreciation.
   2. Replacement Cost: Upon determination that Work covered by a warranty has failed, replace or rebuild the Work to an acceptable condition complying with requirements of Contract Documents. The Seller is responsible for the cost of replacing or rebuilding defective Work regardless of whether the Owner has benefited from use of the Work through a portion of its anticipated useful service life.
   3. Owner's Recourse: Written warranties made to the Owner are in addition to implied warranties, and shall not limit the duties, obligations, rights and remedies otherwise available under the law, nor shall warranty periods be interpreted as limitations on time in which the Owner can enforce such other duties, obligations, rights, or remedies.
      a. Rejection of Warranties: The Owner reserves the right to reject warranties and to limit selections to products with warranties not in conflict with requirements of the Contract Documents.
   4. The Owner reserves the right to refuse to accept Work for the Project where a special warranty, certification, or similar commitment is required on such Work or part of the Work, until evidence is presented that entities required to countersign such commitments are willing to do so.

PART 2 – PRODUCTS

2.1 PRODUCT OPTIONS

A. General Product Requirements: Provide products that comply with the Contract Documents, that are undamaged, and unless otherwise indicated, that are new at time of installation.
   1. Provide products complete with accessories, trim, finish, fasteners, and other items needed for a complete installation and indicated use and effect.
   2. Standard Products: If available, and unless custom products or nonstandard options are specified, provide standard products of types that have been produced and used successfully in similar situations on other projects.
   3. Owner reserves the right to limit selection to products with warranties not in conflict with requirements of the Contract Documents.
   4. Where products are accompanied by the term "as selected," Engineer will make selection.
   5. Where products are accompanied by the term "match sample," sample to be matched is Engineer's.

6. Descriptive, performance, and reference standard requirements in the Specifications establish "salient characteristics" of products.
7. Or Equal: Where products are specified by name and accompanied by the term "or equal" or "or approved equal" or "or approved," comply with provisions in "Comparable Products" Article to obtain approval for use of an unnamed product.

B. Product Selection Procedures: Procedures for product selection include the following:
1. Product: Where Specification paragraphs or subparagraphs titled "Product" name a single product and manufacturer, provide the product named.
   a. Substitutions may be considered unless otherwise indicated.
2. Manufacturer/Source: Where Specification paragraphs or subparagraphs titled "Manufacturer" or "Source" name single manufacturers or sources, provide a product by the manufacturer or from the source named that complies with requirements.
   a. Substitutions may be considered, unless otherwise indicated.
3. Products: Where Specification paragraphs or subparagraphs titled "Products" introduce a list of names of both products and manufacturers, provide one of the products listed that complies with requirements.
   a. Substitutions may be considered, unless otherwise indicated.
4. Manufacturers: Where Specification paragraphs or subparagraphs titled "Manufacturers" introduce a list of manufacturers' names, provide a product by one of the manufacturers listed that complies with requirements.
   a. Substitutions may be considered, unless otherwise indicated
5. Available Products: Where Specification paragraphs or subparagraphs titled "Available Products" introduce a list of names of both products and manufacturers, provide one of the products listed or another product that complies with requirements. Comply with provisions in "Comparable Products" Article to obtain approval for use of an unnamed product.
6. Available Manufacturers: Where Specification paragraphs or subparagraphs titled "Available Manufacturers" introduce a list of manufacturers' names, provide a product by one of the manufacturers listed or another manufacturer that complies with requirements. Comply with provisions in "Comparable Products" Article to obtain approval for use of an unnamed product.
7. Product Options: Where Specification paragraphs titled "Product Options" indicate that size, profiles, and dimensional requirements on Drawings are based on a specific product or system, provide either the specific product or system indicated or a comparable product or system by another manufacturer. Comply with provisions in "Product Substitutions" Article.
8. Basis-of-Design Products: Where Specification paragraphs or subparagraphs titled "Basis-of-Design Product[**s**]" are included and also introduce or refer to a list of manufacturers' names, provide either the specified product or a comparable product by one of the other named manufacturers. Drawings and Specifications indicate sizes, profiles, dimensions, and other characteristics that are based on the product named. Comply with provisions in "Comparable Products" Article to obtain approval for use of an unnamed product.
   a. Substitutions will not be considered.

2.2 PRODUCT SUBSTITUTIONS

A. Timing: Engineer will consider requests for substitution if received within 7 days after the Notice to Proceed. Requests received after that time may be considered or rejected at discretion of Engineer.

B. Conditions: Engineer will consider Seller's request for substitution when the following conditions are satisfied. If the following conditions are not satisfied, Engineer will return requests without action, except to record noncompliance with these requirements:

1. Requested substitution offers Owner a substantial advantage in cost, time, energy conservation, or other considerations, after deducting additional responsibilities Owner must assume. Owner's additional responsibilities may include compensation to Engineer for redesign and evaluation services, increased cost of other construction by Owner, and similar considerations.
2. Requested substitution does not require extensive revisions to the Contract Documents.
3. Requested substitution is consistent with the Contract Documents and will produce indicated results.
4. Substitution request is fully documented and properly submitted.
5. Requested substitution will not adversely affect Construction Schedule.
6. Requested substitution has received necessary approvals of authorities having jurisdiction.
7. Requested substitution is compatible with other portions of the Work.
8. Requested substitution has been coordinated with other portions of the Work.
9. Requested substitution provides specified warranty.
10. The specified product or method of construction cannot be provided in a manner that is compatible with other materials, and where the Seller certifies that the substitution will overcome the incompatibility.
11. The specified product or method of construction cannot be coordinated with other materials, and where the Seller certifies that the proposed substitution can be coordinated.
12. The specified product or method of construction cannot provide a warranty required by the Contract Documents and where the Seller certifies that the proposed substitution provide the required warranty.

2.3 COMPARABLE PRODUCTS

A. Where products or manufacturers are specified by name, submit the following, in addition to other required submittals, to obtain approval of an unnamed product:

1. Evidence that the proposed product does not require extensive revisions to the Contract Documents that it is consistent with the Contract Documents and will produce the indicated results, and that it is compatible with other portions of the Work.
2. Detailed comparison of significant qualities of proposed product with those named in the Specifications. Significant qualities include attributes such as performance, weight, size, durability, visual effect, and specific features and requirements indicated.
3. Evidence that proposed product provides specified warranty.
4. List of similar installations for completed projects with project names and addresses and names and addresses of Engineers and owners, if requested.
5. Samples, if requested.

PART 3 – EXECUTION (Not Used)

END OF SECTION

SECTION 017516 – SYSTEM START-UP

PART 1 – GENERAL

1.1 SUMMARY

A. Section Includes:
1. Procedures and actions, required of the Supplier, which are necessary to achieve and demonstrate Substantial Completion.
2. Requirements for Substantial Completion Submittals.

1.2 QUALITY ASSURANCE

A. Qualifications:
1. Operations and maintenance specialist for liaison:
a. Licensed in any state at a level equivalent to a Class 4A operator's license issued by the State of New York.
b. Alternate to licensed operator:
1) Registered Professional Engineer in New York with Master of Sciences degree in sanitary or environmental engineering.

1.3 DEFINITIONS

A. Project Classified System (PCS): A defined part of the Project, consisting of an arrangement of items, such as equipment, structures, components, piping, wiring, materials, or incidentals, so related or connected to form an identifiable, unified, functional, operational, safe, and independent system.

B. Pre-Demonstration Period: The period of time, of unspecified duration after initial construction and installation activities during which Construction Contractor, with assistance from Supplier's representatives, performs in the following sequence:
1. Finishing type construction work to ensure the Project or each PCS has reached a state of Substantial Completion.
2. Equipment start-up.
3. Personnel training.

C. Demonstration Period: A period of time, of specified duration, following the Pre-Demonstration Period, during which the Construction Contractor and Supplier initiates process flow through the Membrane System and starts up and operates the System, without exceeding specified downtime limitations, to prove the functional integrity of the mechanical and electrical equipment and components and the control interfaces of the respective equipment and components comprising the System as evidence of Substantial Completion.

D. Substantial Completion: See Division 0, General Conditions.

1.4 SUBMITTALS

A. Submit in the chronological order listed below prior to the completion of the Pre-Demonstration Period.
1. Master operation and maintenance training schedule:
a. Submit 30 days (minimum) prior to first training session for Owner's personnel.

b. Schedule to include:
    1) Target date and time for Owner witnessing of each system initial start-up.
    2) Target date and time for Operation and Maintenance training for each system, both field and classroom.
    3) Target date for initiation of Demonstration Period.
c. Submit for review and approval by Owner.
d. Include holidays observed by Owner.
e. Attend a schedule planning and coordination meeting 90 calendar days prior to first anticipated training session.
    1) Provide a status report and schedule-to-complete for requirements prerequisite to manufacturer's training.
    2) Identify initial target dates for individual manufacturer's training sessions.
f. Owner reserves the right to insist on a minimum days' notice of rescheduled training session not conducted on master schedule target date for any reason.
g. Schedule to be resubmitted until approved.

2. Substantial Completion Submittal:
    a. Approved Operation and Maintenance manuals received by Engineer minimum 14 days prior to scheduled training.
    b. Written request for Owner to witness each system pre-demonstration start up. Request to be received by Owner minimum one week before scheduled training of Owner's personnel on that system.
    c. Equipment installation and pre-demonstration start up certifications.
    d. Letter verifying completion of all pre-demonstration start up activities including receipt of all specified items from manufacturers or suppliers as final item prior to initiation of Demonstration Period.

1.5 SEQUENCING AND SCHEDULING

A. Project Classified Systems (PSCs) established as follows:
    1. PCS #1: Membrane Filtration System as described in Section 455000 Membrane Filtration System and all incidentals necessary for complete system.

1.6 COST OF START-UP

A. Supplier to assist with System Start-Up, and include all costs associated with such assistance in their bid price.

PART 2 – PRODUCTS – NOT APPLICABLE

PART 3 – EXECUTION

3.1 GENERAL

A. Facility Start up Divided into Two Periods:
   1. Pre-Demonstration Period including:
      a. Completion of construction work to bring Project to a state of Substantial Completion, including resolution of punch list items crucial to process and safe operations.
      b. Start-Up of Equipment.
      c. Training of Personnel.
      d. Completion of the filing of all required submittals.
      e. Filing of Construction Contractor's Notice of Substantial Completion and Request for Inspection.
   2. Demonstration Period including:
      a. Demonstration of functional integrity of facility or PCS.

3.2 PRE-DEMONSTRATION PERIOD

A. Completion of Construction Work:
   1. Construction Contractor to complete the work to bring the System to a state substantial completion.

B. Equipment Start up:
   1. Requirements for individual items of equipment are included in Divisions 2 through 48 of these Specifications.
   2. Prepare the equipment so it will operate properly and safely and be ready to demonstrate functional integrity during the Demonstration Period.
   3. Perform equipment start-up to extent possible without introducing product flow.
   4. Test tanks, pumping and similar equipment requiring a fluid, using chlorinated treated plant-effluent water.
   5. Dispose of water used for equipment start-up.
   6. Procedures include but are not necessarily limited to the following:
      a. Test or check and correct deficiencies of:
         1) Power, control, and monitoring circuits for continuity prior to connection to power source.
         2) Voltage of all circuits.
         3) Phase sequence.
         4) Cleanliness of connecting piping systems.
         5) Alignment of connected machinery.
         6) Vacuum and pressure of all closed systems.
         7) Lubrication.
         8) Valve orientation and position status for manual operating mode.
         9) Tankage for integrity using clean water.
         10) Pumping equipment using clean water.
         11) Instrumentation and control signal generation, transmission, reception, and response.
         12) Tagging and identification systems.
         13) All equipment: Proper connections, alignment, calibration, and adjustment.
      b. Calibrate all safety equipment.

c. Manually rotate or move moving parts to assure freedom of movement.
d. "Bump" start electric motors to verify proper rotation.
e. Perform other tests, checks, and activities required to make the equipment ready for Demonstration Period.
f. Documentation:
1) Prepare a log showing each equipment item subject to this paragraph and listing what is to be accomplished during Equipment Start up. Provide a place for the Supplier to record date and person accomplishing required work. Submit completed document before requesting inspection for Substantial Completion certification.

7. Obtain certifications, without restrictions or qualifications, and deliver to Engineer:
a. Manufacturer's equipment installation check letters.
b. Instrumentation Supplier's Instrumentation Installation and Calibration Certificate.

C. Personnel Training:
1. See individual equipment specification sections.
2. Conduct all personnel training after completion of Equipment Start up for the equipment for which training is being conducted.
a. Personnel training on individual equipment or systems will not be considered completed unless:
1) All pretraining deliverables are received and approved before commencement of training on the individual equipment or system.
2) No system malfunctions occur during training.
3) All provisions of field and classroom training specifications are met.
b. Training not in compliance with the above will be performed again in its entirety by the manufacturer at no additional cost to Owner.
3. Field and classroom training requirements:
a. Hold classroom training on site.
b. Notify each manufacturer specified for on-site training that the Owner reserves the right to video record any or all training sessions. Organize each training session in a format compatible with video recording.
c. Training instructor: Factory trained and familiar with giving both classroom and "hands-on" instructions.
d. Training instructors: Be at classes on time. Session beginning and ending times to be coordinated with the Owner and indicated on the master schedule. Normal time lengths for class periods can vary, but brief rest breaks should be scheduled and taken.
e. Organize training sessions into maintenance verses operation topics and identify on schedule.
f. Plan for minimum class attendance of 6 people at each session and provide sufficient classroom materials, samples, and handouts for those in attendance.
g. Instructors to have a typed agenda and well prepared instructional material. The use of visual aids, e.g., films, pictures, and slides is recommended for use during the classroom training programs. Deliver agendas to the Engineer a minimum of 7 days prior to the classroom training. Provide equipment required for presentation of films, slides, and other visual aids.
h. In the on-site training sessions, cover the information required in the Operation and Maintenance manuals submitted according to Section 013300 “Submittal Procedures” and the following areas as applicable to PCSs.
1) Operation of equipment and Process Adjustments.

2) Operational safety.
3) Capabilities.
4) Optimizing equipment performance.
5) Emergency situation response.
6) Troubleshooting of equipment.
7) Takedown procedures (disassembly and assembly).
8) Maintenance and repair of equipment.
9) Lubrication of equipment.
10) Preventive maintenance procedures.
11) Adjustments to equipment.
12) Inventory of spare parts.

i. At a minimum, address above paragraphs 1 through 6 in the operation session and paragraphs 7 through 12 in the maintenance sessions.

j. Maintain a log of classroom training provided including: Instructors, topics, dates, time, and attendance.

D. Complete the filing of all required submittals:
1. Shop drawings.
2. Operation and Maintenance Manuals.
3. Training material.

3.3 DEMONSTRATION PERIOD

A. General:
1. Demonstrate the functional integrity of the mechanical, electrical, and control interfaces of the respective equipment and components comprising the System as evidence of Substantial Completion.
2. Duration of Demonstration Period: 120 consecutive hours.
3. If, during the Demonstration Period, the aggregate amount of time used for repair, alteration, or unscheduled adjustments to any equipment or systems that renders the affected equipment or system inoperative exceed 10 percent of the Demonstration Period, the demonstration of functional integrity will be deemed to have failed. In the event of failure, a new Demonstration Period will recommence after correction of the cause of failure. The new Demonstration Period shall have the same requirements and duration as the Demonstration Period previously conducted.
4. Conduct the demonstration of functional integrity under full operational conditions.
5. Owner will provide operational personnel to provide process decisions affecting plant performance. Owner's assistance will be available only for process decisions. Supplier will perform all other functions including but not limited to equipment operation and maintenance until successful completion of the Demonstration Period.
6. Owner reserves the right to simulate operational variables, peak flow events, equipment failures, routine maintenance scenarios, etc., to verify the functional integrity of automatic and manual backup systems and alternate operating modes.
7. Demonstration by PCS:
a. Supplier may demonstrate by PCS, either individually or a combination of two or more PCS.

8. Time of beginning and ending any Demonstration Period shall be agreed upon by Construction Contractor, Supplier, Owner, and Engineer in advance of initiating Demonstration Period.
9. Throughout the Demonstration Period, provide knowledgeable personnel to answer Owner's questions, provide final field instruction on select systems and to respond to any system problems or failures which may occur.
10. Provide all labor, supervision, utilities, chemicals, maintenance, equipment, vehicles, or any other item necessary to operate and demonstrate all systems being demonstrated.

END OF SECTION

SECTION 017823 – OPERATION AND MAINTENANCE DATA

PART 1 – GENERAL

1.1 SUMMARY

A. This Section includes administrative and procedural requirements for preparing operation and maintenance manuals, including the following:
   1. Operation and maintenance documentation directory.
   2. Emergency manuals.
   3. Operation manuals for systems, subsystems, and equipment.
   4. Maintenance manuals for the care and maintenance of systems and equipment.

1.2 DEFINITIONS

A. System: An organized collection of parts, equipment, or subsystems united by regular interaction.

B. Subsystem: A portion of a system with characteristics similar to a system.

1.3 SUBMITTALS

A. Initial Submittal: Submit electronic PDF draft copies of each manual at least 15 days before requesting inspection for Substantial Completion. Include a complete operation and maintenance directory. Engineer will mark whether general scope and content of manual are acceptable.

B. Final Submittal: Submit electronic PDF of each manual in final form at least 15 days before final inspection. Engineer will return copy with electronic comments within 15 days after final inspection.
   1. Correct or modify each manual to comply with Engineer's comments. Submit three (3) hard copies and one (1) searchable PDF of each corrected manual within 15 days of receipt of Engineer's comments.

1.4 COORDINATION

A. Where operation and maintenance documentation include information on installations by more than one factory-authorized service representative, assemble and coordinate information furnished by representatives and prepare manuals.

PART 2 – PRODUCTS

2.1 OPERATION AND MAINTENANCE DOCUMENTATION DIRECTORY

A. Organization: Include a section in the directory for each of the following:
   1. List of documents.
   2. List of systems.
   3. List of equipment.
   4. Table of contents.

B. List of Systems and Subsystems: List systems alphabetically. Include references to operation and maintenance manuals that contain information about each system.

C. List of Equipment: List equipment for each system, organized alphabetically by system. For pieces of equipment not part of system, list alphabetically in separate list.

D. Tables of Contents: Include a table of contents for each emergency, operation, and maintenance manual.

E. Identification: In the documentation directory and in each operation and maintenance manual, identify each system, subsystem, and piece of equipment with the same designation used in the Contract Documents.

2.2 MANUALS, GENERAL

A. Organization: Unless otherwise indicated, organize each manual into a separate section for each system and subsystem, and a separate section for each piece of equipment not part of a system. Each manual shall contain the following materials, in the order listed:
   1. Title page.
   2. Table of contents.
   3. Manual contents.

B. Title Page: Enclose title page in transparent plastic sleeve. Include the following information:
   1. Subject matter included in manual.
   2. Name and address of Project.
   3. Name and address of Owner.
   4. Date of submittal.
   5. Name, address, and telephone number of Seller.
   6. Name and address of Engineer.
   7. Cross-reference to related systems in other operation and maintenance manuals.

C. Table of Contents: List each product included in manual, identified by product name, indexed to the content of the volume, and cross-referenced to Specification Section number in Project Manual.
   1. If operation or maintenance documentation requires more than one volume to accommodate data, include comprehensive table of contents for all volumes in each volume of the set.

D. Manual Contents: Organize into sets of manageable size. Arrange contents alphabetically by system, subsystem, and equipment. If possible, assemble instructions for subsystems, equipment, and components of one system into a single binder.
   1. Binders: Heavy-duty, 3-ring, vinyl-covered, loose-leaf binders, in thickness necessary to accommodate contents, sized to hold 8-1/2-by-11-inch (115-by-280-mm) paper; with clear plastic sleeve on spine to hold label describing contents and with pockets inside covers to hold folded oversize sheets.
      a. If two or more binders are necessary to accommodate data of a system, organize data in each binder into groupings by subsystem and related components. Cross-reference other binders if necessary to provide essential information for proper operation or maintenance of equipment or system.
      b. Identify each binder on front and spine, with printed title "OPERATION AND MAINTENANCE MANUAL," Project title or name, and subject matter of contents. Indicate volume number for multiple-volume sets.
   2. Dividers: Heavy-paper dividers with plastic-covered tabs for each section. Mark each tab to indicate contents. Include typed list of products and major components of equipment included

in the section on each divider, cross-referenced to Specification Section number and title of Project Manual.

3. Protective Plastic Sleeves: Transparent plastic sleeves designed to enclose diagnostic software diskettes for computerized electronic equipment.
4. Supplementary Text: Prepared on 8-1/2-by-11-inch (115-by-280-mm), 20-lb/sq. ft. (75-g/sq. m) white bond paper.
5. Drawings: Attach reinforced, punched binder tabs on drawings and bind with text.
    a. If oversize drawings are necessary, fold drawings to same size as text pages and use as foldouts.
    b. If drawings are too large to be used as foldouts, fold and place drawings in labeled envelopes and bind envelopes in rear of manual. At appropriate locations in manual, insert typewritten pages indicating drawing titles, descriptions of contents, and drawing locations.

2.3 EMERGENCY MANUALS

A. Content: Organize manual into a separate section for each of the following:
1. Type of emergency.
2. Emergency instructions.
3. Emergency procedures.

B. Type of Emergency: Where applicable for each type of emergency indicated below, include instructions and procedures for each system, subsystem, piece of equipment, and component:
1. Power failure.
2. System, subsystem, or equipment failure.
3. Fire.
4. Flood.

C. Emergency Instructions: Describe and explain warnings, trouble indications, error messages, and similar codes and signals. Include responsibilities of Owner's operating personnel for notification of Installer, supplier, and manufacturer to maintain warranties.

D. Emergency Procedures: Include the following, as applicable:
1. Instructions on stopping.
2. Shutdown instructions for each type of emergency.
3. Operating instructions for conditions outside normal operating limits.
4. Required sequences for electric or electronic systems.
5. Special operating instructions and procedures.

2.4 OPERATION MANUALS

A. Content: In addition to requirements in this Section, include operation data required in individual Specification Sections and the following information:
1. System, subsystem, and equipment descriptions.
2. Performance and design criteria.
3. Operating standards and troubleshooting.
4. Operating procedures.
5. Operating logs.
6. Wiring diagrams.
7. Control diagrams.
8. Piped system diagrams.
9. Precautions against improper use.

10. License requirements including inspection and renewal dates.

B. Descriptions: Include the following:
   1. Product name and model number.
   2. Manufacturer's name.
   3. Equipment identification with serial number of each component.
   4. Equipment function.
   5. Operating characteristics.
   6. Limiting conditions.
   7. Performance curves.
   8. Engineering data and tests.
   9. Complete nomenclature and number of replacement parts.

C. Operating Procedures: Include the following, as applicable:
   1. Startup procedures.
   2. Equipment or system break-in procedures.
   3. Routine and normal operating instructions.
   4. Regulation and control procedures.
   5. Instructions on stopping.
   6. Normal shutdown instructions.
   7. Seasonal and weekend operating instructions.
   8. Required sequences for electric or electronic systems.
   9. Special operating instructions and procedures.

D. Systems and Equipment Controls: Describe the sequence of operation, diagram controls as installed, and screen shots of HMI with descriptions of operation.

E. Piped Systems: Diagram piping as installed and identify color-coding where required for identification.

2.5 PRODUCT MAINTENANCE MANUAL

A. Content: Organize manual into a separate section for each product, material, and finish. Include source information, product information, maintenance procedures, repair materials and sources, and warranties and bonds, as described below.

B. Source Information: List each product included in manual, identified by product name and arranged to match manual's table of contents. For each product, list name, address, and telephone number of Installer or supplier and maintenance service agent, and cross-reference Specification Section number and title in Project Manual.

C. Product Information: Include the following, as applicable:
   1. Product name and model number.
   2. Manufacturer's name.
   3. Color, pattern, and texture.
   4. Material and chemical composition.
   5. Reordering information for specially manufactured products.

D. Maintenance Procedures: Include manufacturer's written recommendations and the following:
   1. Inspection procedures.

2. Types of cleaning agents to be used and methods of cleaning.
3. List of cleaning agents and methods of cleaning detrimental to product.
4. Schedule for routine cleaning and maintenance.
5. Repair instructions.

E. Repair Materials and Sources: Include lists of materials and local sources of materials and related services.

F. Warranties and Bonds: Include copies of warranties and bonds and lists of circumstances and conditions that would affect validity of warranties or bonds.
1. Include procedures to follow and required notifications for warranty claims.

2.6 SYSTEMS AND EQUIPMENT MAINTENANCE MANUAL

A. Content: For each system, subsystem, and piece of equipment not part of a system, include source information, manufacturers' maintenance documentation, maintenance procedures, maintenance and service schedules, spare parts list and source information, maintenance service contracts, and warranty and bond information, as described below.

B. Source Information: List each system, subsystem, and piece of equipment included in the manual, identified by product name and arranged to match manual's table of contents. For each product, list name, address, and telephone number of Installer or supplier and maintenance service agent, and cross-reference Specification Section number and title in Project Manual.

C. Manufacturers' Maintenance Documentation: Manufacturers' maintenance documentation including the following information for each component part or piece of equipment:
1. Standard printed maintenance instructions and bulletins.
2. Drawings, diagrams, and instructions required for maintenance, including disassembly and component removal, replacement, and assembly.
3. Identification and nomenclature of parts and components.
4. List of items recommended to be stocked as spare parts.

D. Maintenance Procedures: Include the following information and items that detail essential maintenance procedures:
1. Test and inspection instructions.
2. Troubleshooting guide.
3. Precautions against improper maintenance.
4. Disassembly; component removal, repair, and replacement; and reassembly instructions.
5. Aligning, adjusting, and checking instructions.
6. Demonstration and training videotape, if available.

E. Maintenance and Service Schedules: Include service and lubrication requirements, list of required lubricants for equipment, and separate schedules for preventive and routine maintenance and service with standard time allotment.
1. Scheduled Maintenance and Service: Tabulate actions for daily, weekly, monthly, quarterly, semiannual, and annual frequencies.
2. Maintenance and Service Record: Include manufacturers' forms for recording maintenance.

F. Spare Parts List and Source Information: Include lists of replacement and repair parts, with parts identified and cross-referenced to manufacturers' maintenance documentation and local sources of maintenance materials and related services.

G. Maintenance Service Contracts: Include copies of maintenance agreements with name and telephone number of service agent.

H. Warranties and Bonds: Include copies of warranties and bonds and lists of circumstances and conditions that would affect validity of warranties or bonds.
   1. Include procedures to follow and required notifications for warranty claims.

PART 3 – EXECUTION

3.1 MANUAL PREPARATION

A. Operation and Maintenance Documentation Directory: Prepare a separate manual that provides an organized reference to emergency, operation, and maintenance manuals.

B. Emergency Manual: Assemble a complete set of emergency information indicating procedures for use by emergency personnel and by Owner's operating personnel for types of emergencies indicated.

C. Product Maintenance Manual: Assemble a complete set of maintenance data indicating care and maintenance of each product, material, and finish incorporated into the Work.

D. Operation and Maintenance Manuals: Assemble a complete set of operation and maintenance data indicating operation and maintenance of each system, subsystem, and piece of equipment not part of a system.
   1. Engage a factory-authorized service representative to assemble and prepare information for each system, subsystem, and piece of equipment not part of a system.
   2. Prepare a separate manual for each system and subsystem, in the form of an instructional manual for use by Owner's operating personnel.

E. Manufacturers' Data: Where manuals contain manufacturers' standard printed data, include only sheets pertinent to product or component installed. Mark each sheet to identify each product or component incorporated into the Work. If data include more than one item in a tabular format, identify each item using appropriate references from the Contract Documents. Identify data applicable to the Work and delete references to information not applicable.
   1. Prepare supplementary text if manufacturers' standard printed data are not available and where the information is necessary for proper operation and maintenance of equipment or systems.

F. Drawings: Prepare drawings supplementing manufacturers' printed data to illustrate the relationship of component parts of equipment and systems and to illustrate control sequence and flow diagrams. Coordinate these drawings with information contained in Record Drawings to ensure correct illustration of completed installation.
   1. Do not use original Project Record Documents as part of operation and maintenance manuals.
   2. Comply with requirements of newly prepared Record Drawings in Division 1 Section "Project Record Documents."

G. Comply with Specification 455000 Membrane Filtration System, Table 3-1 Project Schedule for submitting operation and maintenance documentation.

END OF SECTION

SECTION 017900 – DEMONSTRATION AND TRAINING

PART 1 – GENERAL

1.1 SUMMARY

A. This Section includes administrative and procedural requirements for instructing Owner's personnel, including the following:
   1. Demonstration of operation of systems, subsystems, and equipment.
   2. Training in operation and maintenance of systems, subsystems, and equipment.

1.2 SUBMITTALS

A. Instruction Program: Submit five copies of outline of instructional program for demonstration and training, including a schedule of proposed dates, times, length of instruction time, and instructors' names for each training module. Include learning objective and outline for each training module.
   1. At completion of training, submit 2 complete training manual**s** for Owner's use.

B. Qualification Data: For firms and persons specified in "Quality Assurance" Article to demonstrate their capabilities and experience. Include lists of completed projects with project names and addresses, names and addresses of ENGINEERs and owners, and other information specified.

C. Attendance Record: For each training module, submit list of participants and length of instruction time.

D. Evaluations: For each participant and for each training module, submit results and documentation of performance-based test.

1.3 QUALITY ASSURANCE

A. Facilitator Qualifications: A firm or individual experienced in training or educating maintenance personnel in a training program similar in content and extent to that indicated for this Project, and whose work has resulted in training or education with a record of successful learning performance.

B. Instructor Qualifications: A factory-authorized service representative, complying with requirements in Division 1 Section "Quality Requirements," experienced in operation and maintenance procedures and training.

1.4 COORDINATION

A. Coordinate instruction schedule with Owner's operations. Adjust schedule as required to minimize disrupting Owner's operations.

B. Coordinate instructors, including providing notification of dates, times, length of instruction time, and course content.

C. Coordinate content of training modules with content of approved emergency, operation, and maintenance manuals. Do not submit instruction program until operation and maintenance data has been reviewed and approved by Engineer.

PART 2 – PRODUCTS

2.1 INSTRUCTION PROGRAM

A. Program Structure: Develop an instruction program that includes individual training modules for each system and equipment not part of a system, as required by individual Specification Sections, and as follows:
   1. All systems, equipment, and process included in Section 455000 Membrane Filtration System.
   2. Laboratory equipment

B. Training Modules: Develop a learning objective and teaching outline for each module. Include a description of specific skills and knowledge that participant is expected to master. For each module, include instruction for the following:
   1. Basis of System Design, Operational Requirements, and Criteria: Include the following:
      a. System, subsystem, and equipment descriptions.
      b. Performance and design criteria.
      c. Operating standards.
      d. Regulatory requirements.
      e. Equipment function.
      f. Operating characteristics.
      g. Limiting conditions.
      h. Performance curves.
   2. Documentation: Review the following items in detail:
      a. Emergency manuals.
      b. Operations manuals.
      c. Maintenance manuals.
      d. Project Record Documents.
      e. Identification systems.
      f. Warranties and bonds.
      g. Maintenance service agreements and similar continuing commitments.
   3. Emergencies: Include the following, as applicable:
      a. Instructions on meaning of warnings, trouble indications, and error messages.
      b. Instructions on stopping.
      c. Shutdown instructions for each type of emergency.
      d. Operating instructions for conditions outside of normal operating limits.
      e. Sequences for electric or electronic systems.
      f. Special operating instructions and procedures.
   4. Operations: Include the following, as applicable:
      a. Startup procedures.
      b. Equipment or system break-in procedures.
      c. Routine and normal operating instructions.
      d. Regulation and control procedures.
      e. Control sequences.
      f. Safety procedures.
      g. Instructions on stopping.
      h. Normal shutdown instructions.
      i. Operating procedures for emergencies.

j. Operating procedures for system, subsystem, or equipment failure.
k. Seasonal and weekend operating instructions.
l. Required sequences for electric or electronic systems.
m. Special operating instructions and procedures.

5. Adjustments: Include the following:
   a. Alignments.
   b. Checking adjustments.
   c. Noise and vibration adjustments.
   d. Economy and efficiency adjustments.
6. Troubleshooting: Include the following:
   a. Diagnostic instructions.
   b. Test and inspection procedures.
7. Maintenance: Include the following:
   a. Inspection procedures.
   b. Types of cleaning agents to be used and methods of cleaning.
   c. List of cleaning agents and methods of cleaning detrimental to product.
   d. Procedures for routine cleaning
   e. Procedures for preventive maintenance.
   f. Procedures for routine maintenance.
   g. Instruction on use of special tools.
8. Repairs: Include the following:
   a. Diagnosis instructions.
   b. Repair instructions.
   c. Disassembly; component removal, repair, and replacement; and reassembly instructions.
   d. Instructions for identifying parts and components.
   e. Review of spare parts needed for operation and maintenance.

PART 3 – EXECUTION

3.1 PREPARATION

A. Assemble educational materials necessary for instruction, including documentation and training module. Assemble training modules into a combined training manual.

B. Set up instructional equipment at instruction location.

3.2 INSTRUCTION

A. Facilitator: Engage a qualified facilitator to prepare instruction program and training modules, to coordinate instructors, and to coordinate between Construction Contractor and Owner for number of participants, instruction times, and location.

B. Engage qualified instructors to instruct Owner's personnel to adjust, operate, and maintain systems, subsystems, and equipment not part of a system.

C. Scheduling: Provide instruction at mutually agreed on times. For equipment that requires seasonal operation, provide similar instruction at start of each season.

1. Schedule training with Owner through Construction Contractor with at least 7 days' advance notice.

D. Evaluation: At conclusion of each training module, assess and document each participant's mastery of module by use of demonstration performance-based test.

E. Cleanup: Collect used and leftover educational materials and remove from Project Site. Remove instructional equipment. Restore systems and equipment to condition existing before initial training use.

END OF SECTION

SECTION 019113 – GENERAL COMMISSIONING REQUIREMENTS

PART 1 – GENERAL

1.1 RELATED DOCUMENTS

A. Drawings and general provisions of the Contract, including General and Supplementary Conditions and other Division 01 Specification Sections, apply to this Section.

1.2 SUPPLIER SUMMARY

A. Section includes general requirements that apply to implementation of commissioning without regard to specific systems, assemblies, or components.

1.3 SUPPLIER DEFINITIONS

A. BoD: Basis of Design. A document that records concepts, calculations, decisions, and product selections used to meet the OPR and to satisfy applicable regulatory requirements, standards, and guidelines. The document includes both narrative descriptions and lists of individual items that support the design process.

B. Commissioning Plan: A document that outlines the organization, schedule, allocation of resources, and documentation requirements of the commissioning process.

C. CxA: Commissioning Authority (Supplier).

D. OPR: Owner's Project Requirements. A document that details the functional requirements of a project and the expectations of how it will be used and operated. These include Project goals, measurable performance criteria, cost considerations, benchmarks, success criteria, and supporting information.

E. Systems, Subsystems, Equipment, and Components: Where these terms are used together or separately, they shall mean "as-built" systems, subsystems, equipment, and components.

1.4 COMMISSIONING TEAM

A. Members Appointed by Supplier(s): Individuals, each having the authority to act on behalf of the entity he or she represents, explicitly organized to implement the commissioning process through coordinated action. The commissioning team shall consist of, but not be limited to, representatives of the Supplier, including specialists deemed appropriate by the Supplier.

B. Members Appointed by Owner:
   1. Supplier: The designated person, company, or entity that plans, schedules, and coordinates the commissioning team to implement the commissioning process. Representatives of the facility user and operation and maintenance personnel.
   2. engineering design professionals.

1.5 OWNER'S RESPONSIBILITIES

A. Provide the OPR documentation to the Supplier and Construction Contractor for information and use.

B. Assign operation and maintenance personnel and schedule them to participate in commissioning team activities.

1.6 SUPPLIER'S RESPONSIBILITIES

A. Supplier shall assign representatives with expertise and authority to act on its behalf and shall schedule them to participate in and perform commissioning process activities including, but not limited to, the following:
   1. Evaluate performance deficiencies identified in test reports and, in collaboration with entity responsible for system and equipment installation, recommend corrective action.
   2. Cooperate with the Engineer for resolution of issues recorded in the Issues Log.
   3. Attend commissioning team meetings held on an as needed basis.
   4. Integrate and coordinate commissioning process activities with construction schedule.
   5. Review and accept construction checklists provided by the Supplier.
   6. Complete paper construction checklists as Work is completed and provide to the Engineer on a daily basis.
   7. Review and accept commissioning process test procedures provided by the Supplier.
   8. Complete commissioning process test procedures.

1.7 SUPPLIER'S RESPONSIBILITIES

A. Organize and lead the commissioning team.

B. Provide commissioning plan.

C. Convene commissioning team meetings.

D. Provide Project-specific construction checklists and commissioning process test procedures.

E. Verify the execution of commissioning process activities using random sampling. The sampling rate may vary from 1 to 100 percent. Verification will include, but is not limited to, equipment submittals, construction checklists, training, operating and maintenance data, tests, and test reports to verify compliance with the OPR. When a random sample does not meet the requirement, the Supplier will report the failure in the Issues Log.

F. Prepare and maintain the Issues Log.

G. Prepare and maintain completed construction checklist log.

H. Witness systems, assemblies, equipment, and component startup.

I. Compile test data, inspection reports, and certificates; include them in the systems manual and commissioning process report.

PART 2 – PRODUCTS (NOT USED)

PART 3 – EXECUTION (NOT USED)

END OF SECTION

SECTION 455000 – MEMBRANE FILTRATION SYSTEM

PART 1 – GENERAL

1.1 SUMMARY

A. Scope:
1. The Supplier shall provide labor, materials, equipment, incidentals design documentation installation instructions and commissioning services as shown, specified and required to furnish the membrane bioreactor equipment complete, for installation by the Contractor.

B. Membrane filtration system includes membrane bioreactor equipment and services, including:
1. Membrane units, including membranes, cassettes, cassette mounting brackets and/or support beams, and piping associated with the membrane unit.
2. Complete Basis of Design documentation; P&IDS, Process Calculations including interconnecting piping and layout.
3. Headers, piping and fittings, associated with each membrane unit or cassette including permeate collection and air distribution headers within the interior limits of the membrane tank. Each membrane unit shall include cassette air and permeate isolation valves and integral air scour distribution aerators. .
4. MBR permeate pumps, recirculation system, sludge wasting, and backwashing system, as applicable.
5. RAS or Feed Forward pumping units and equipment
6. WAS Pumps (if applicable)
7. Air scour blowers for membrane aeration, cleaning and mixing.
8. Compressed air systems including compressors and dryers for instrument air and pneumatic valve operations.
9. VFDs for equipment furnished.
10. Process blowers for aeration tanks
11. Fine bubble diffuser systems for mixing and biological treatment in aerobic biological reactors.
12. Submersible mixers designed for complete-mix in anoxic biological reactors.
13. Chemical systems for Clean-In-Place (CIP) or other membrane cleaning requirements.
14. Process chemical dosing systems for biological operation excluding bulk storage. Process chemical systems are to include NaOH.
15. Membrane system and bioreactor process instrumentation and control including MBR HMI programming and alarms.
16. System start-up, commissioning, performance testing, and training operation and maintenance manuals.
17. Compliance with American Iron and Steel (AIS) requirements.

C. Supplier shall provide equipment in accordance with specifications herein and the following Sections:
1. Section 013300: Submittal Procedure
2. Section 014000: Quality Requirements
3. Section 016000: Product Requirements
4. Section 017516: System Startup
5. Section 017823: Operation and Maintenance Data
6. Section 017900: Demonstration and Training
7. Section 019113: General Commissioning Requirements

D. Excluded equipment: Equipment and services for the following are specifically excluded. Engineer will coordinate with Supplier during design phase to ensure the overall facility design,

procurement drawings and specification meets Supplier's requirements and will result in successful implementation of the Supplier's membrane system.

1. Screening and grit removal
2. Disinfection
3. Bulk chemical storage
4. MCC's
5. Plant SCADA
6. All interconnecting piping and pipe supports between manufacturer supplied equipment unless specified otherwise.

1.2 SUPPLIERS AND MANUFACTURERS

A. The Supplier shall take full responsibility of membrane system and bioreactor equipment design, equipment manufacture, integration and supply, process control, startup, commissioning, performance testing, training and warranty support and shall be fully responsible for all elements of this specification, including membrane warranty requirements.

B. Membrane System Suppliers shall be as follows:
   1. SUEZ WTS - Polyvinylidene Fluoride (PVDF) Hollow Fiber Membrane System
   2. Kubota Chlorinated Polyethylene Flat Sheet Membrane System
   3. Or Approved Equal

1.3 REFERENCE STANDARDS

A. Comply with the latest edition of the following standards, as applicable:
   1. American Water Works Association (AWWA), ANSI/AWWA B130-18, Membrane Bioreactor Systems
   2. US Environmental Protection Agency. 2005. Membrane Filtration Guidance Manual. EPA 815-R-06-009. Washington, DC. Office of Water.
   3. American National Standards Institute, (ANSI)/National Sanitation Foundation, (NSF):
   4. American Society for Testing and Materials (ASTM):
      a. ASTM D 6161, Standard Terminology Used for Microfiltration, Ultrafiltration, Nanofiltration and Reverse Osmosis Membrane Processes.
      b. ASTM A312, Pipe Specifications.
      c. ASTM A240, Stainless Steel Material Specifications.
   5. American Welding Society (AWS):
      a. AWS B2.1, Specification for Resistance Welding for Aerospace Applications.
      b. AWS D1.3, Structural Welding Code Sheet Steel.
      c. AWS D1.6, Structural Welding Code Stainless Steel.
      d. AWS D9.1, Sheet Metal Welding Code.
      e. AWS D17.2, Specification for Resistance Welding – Spot Welding by Machine.
      f. AWS G2.1, Guide for the Joining of Wrought Nickel-based Alloys.
   6. American National Standard Institute (ANSI).
   7. ISO 9000 Certification – Quality Management.
   8. NFPA 820
   9. Ten State Standards
   10. NEIWPCC TR-16
   11. WEF MOP 36

1.4 DEFINITIONS

A. Contractor is defined as the entity responsible for construction and installation of the MBR system, including but not limited to site preparation, process and membrane tank construction, and mechanical and electrical installation.

B. MBR Process:
   1. Bioreactor Train: A secondary treatment train consisting of anoxic and aerobic zones. Each treatment train operates in parallel with other trains, processing a portion of the total plant flow.
   2. Membrane Train: A membrane basin comprising modules and cassettes for liquid-solid separation and connected to a dedicated permeate pump. Each membrane train operates in parallel with other membrane trains and processes a portion of the mixed liquor from the bioreactor trains.
   3. Dry Weather Flow (DWF): Daily flow occurring during dry weather conditions.
   4. Average Daily Flow (ADF): The average flow rate occurring over a 24-hour period based on annual flow rate data'
   5. Maximum Monthly Average Flow (MMAF): The average flow rate occurring over a 24-hour period during the 30-day period with the highest flow based on annual flow rate data.
   6. Maximum Day Flow (MDF): The maximum flow rate averaged over a 24-hour period occurring within annual flow rate data.

C. Peak Hourly flow (PHF): The maximum flow rate sustained over a 2-hour period based on annual flow rate data.

D. Backwash: Synonymous with backpulse and backflushing. Backwashing is any instance where membrane filtered water is charged to the membranes in the reverse direction of permeate flow. A Backwash is performed in-situ and in mixed liquor or activated sludge.

E. Maintenance Clean: Maintenance cleaning is an instance where chemical solution is charged to the membranes in the reverse direction of permeate flow either continuously or in series of pulses combined with soak times. Maintenance cleaning durations are typically less than 0.5hr. Maintenance cleaning is performed in-situ and in mixed liquor or activated sludge.

F. Flux: Permeate flow rate per unit membrane surface area, also filtration rate through a given area of membrane, measured as gallons per square foot of membrane area per day (gallons per day per square foot, gfd)
   1. Instantaneous flux: The flux at any given time, calculated by dividing the measured permeate flow rate by the working membrane area.
   2. Maximum instantaneous flux: The maximum flux at any time or temperature during operation.
   3. Net flux: The average flux over a given period including non-production periods of no flow. Net flux is calculated by dividing actual production capacity over a specified time interval by the working membrane area.

G. In-situ: in the membrane tank and submerged in mixed liquor.

H. Maintenance Clean (MC): Synonymous with chemically enhanced backwash. A Maintenance Cleaning is performed in-situ and in mixed liquor or activated sludge. The procedure is conducted by charging cleaning chemicals to membranes in the reverse direction of permeate flow with a soak time lasting less than 0.5hr.

I. Membrane Element: An element (synonymous with module) is the smallest membrane subunit, which is comprised of either a plate, sheet, or hollow fiber module. The elements are combined to make a membrane cassette.

J. Membrane Cassette: A cassette is comprised of multiple membrane elements or modules that are combined and assembled with an air scour assembly in a single support structure that is connected to a common permeate manifold and capable of being withdrawn from the bioreactor tank for cleaning, inspection, or other purposes.

K. Membrane Unit: A membrane unit is synonymous with cassette.

L. MLSS: Mixed Liquor Suspended Solids, reported as mg/L.

M. Permeability or specific flux: Net flux divided by the transmembrane pressure (gfd/psi).

N. Permeate: Wastewater filtered through the membrane.

O. Recovery Clean: Synonymous with intensive cleaning and CIP. A Recovery Cleaning is performed in-situ with chemicals. A Recovery Clean is any single MBR basin clean that lasts for more than 6.0 hours. The procedure is conducted by charging cleaning chemicals to membranes in either direction with variable soak times.

P. Relaxation: A temporary suspension of membrane filtration with continued air scouring for the purpose of maintaining treatment capacity or reducing cleaning requirements.

Q. Retentate: Water and other materials retained in the MBR tank by the membrane.

R. Seed: Active biomass, described in terms of volatile fraction and TSS concentrations, that is required to charge the MBR

S. Transmembrane pressure (TMP): The pressure drop across a membrane during operation, normalized for the static water head relative to the pressure sensor, measured in units of pounds per square inch, psi.

1.5 QUALITY ASSURANCE

A. Membrane System Supplier Qualifications:

1. Membrane System Supplier shall maintain a quality control program in the design, supply, installation, and servicing of Membrane Systems in accordance with ISO 9001:2015. Provide letter or certificate describing quality control program.
2. Aggregate bonding capability: Supplier shall demonstrate $10 million bonding capability. Provide bonding capacity letter from Supplier's bonding agent.
3. The Supplier shall have a minimum 15-year history of furnishing system design; design and construction administration assistance; equipment manufacture, integration and supply; process controls; project management; startup and commissioning; and warranty support with at least ten (10) full scope MBR wastewater installations in the United States with an ADF capacity larger than 1 MGD. The supplier shall have at least three (3) operational installations in New York State, or if not, at least three (3) operational installations within states participating in Ten States Standards. Provide installation list with facility name, location, startup date, and capacity.
4. The Supplier shall submit a reference list for five (5) installations in operation, treating municipal wastewater in the United States with an ADF capacity larger than or equal to 5 MGD. In order for the installation to qualify, the membrane system procurement contract must have included, at a minimum, membranes, membrane equipment, membrane cleaning equipment, MBR HMI programming, startup, commissioning, training, and warranty.
    a. Valid references for fulfilling this requirement must use a membrane product that is reasonably identical to the product being offered where performance and operations can be reasonably compared to this project. For clarity, reasonably identical shall mean having the same membrane chemistry, pore size, porosity, rejection characteristics, and potting material, but shall allow for minor manufacturing, material and dimensional differences associated with product development and optimization.
    b. Reference information shall include Owner contact information including email, phone number, and address; facility name and location; start-up date; design hydraulic capacity including average and maximum day flowrates; current average and maximum day flowrates applied to the membranes; membrane model number, membrane surface area, design net flux rate; and warranty terms and duration. Note, this information will be used to verify design Flux Rates as provided in Evaluated Bid tables.
5. The Supplier shall have North America based employees qualified in MBR design, field services, operator training, and system support. Contracted services do not qualify. Provide organization chart with personnel names, title, years of experience with MBR systems, and current role or position. Supplier shall have process control and systems integration services within the organization that includes design and programming, of control panels.

6. Supplier shall provide a list of field service technicians and locations that could be used for routine support of the system.

1.6 SUBMITTALS

A. Evaluated Bid Submittals: All items under this heading shall be submitted as part of the Evaluated Bid Proposal.

1. Manufacturer Information:
   a. Manufacturer's Quality Control Program letter or certificate, including ISO 9001 certification per Paragraph 1.5A.2
   b. Manufacturer's Qualified Installation List with Fabrication Facility per Paragraph 1.5A.3.
2. Supplier Qualifications:
   a. Supplier Quality Control Program letter or certificate, including ISO 9001 certification per Paragraph 1.5A.1
   b. Bonding letter per Paragraph 1.5A.2.
   c. Supplier installation list per Paragraph 1.5A.3. & 1.5A.4
   d. Suppler Reference List per Paragraph 1.5A.4.
   e. Supplier organization chart per Paragraph 1.5A.5.
   f. Service technical and location list per Paragraph 1.5A.6.
   g. Compliance Statement per Paragraph 1.7D.
   h. Acknowledgement of American Iron and Steel requirements[BG(1].
3. Design Submittals:
   a. Scope of supply including equipment, design capacity (flow and pressure), and horsepower indicating if equipment will be supplied with ancillary components such as with a VFD, enclosure, filter, silencer, lifting mechanism, etc.
   b. Membrane element, module, cassette, and unit drawings, detailing dimensions, materials, weights, locations of lifting lugs/points, and anchor bolt locations. Information shall also include piping, tubing, valves, and fittings on the membrane unit, including permeate and air-scour piping and connections clearly indicating factory installed and field installed materials.
   c. MBR basin mechanical layout showing number of membrane units and all other components comprising the MBR basin system with reactor dimensions and volume. Layout shall also show proposed air and permeate piping distribution, in-basin instrumentation and valves, and all other components comprising MBR basin systems. Drawings shall detail information in plan and elevation/section views.
   d. Process flow diagram: showing reactor configuration, pumps and flowrates; mixers; blowers and capacity; process and membrane air, recycle, RAS, WAS, and interconnecting piping.
   e. Preliminary Process and Instrumentation Diagram: showing reactor configuration, piping with flow direction and connections, process equipment, and instrumentation and control devices. Diagram shall clearly indicate or delineate Supplier and Contractor scope of supply.
   f. Examples of MBR HMI screen layouts and content for membranes and ancillary facilities including air scour, cleaning, permeation, and backwashing operations.
   g. Biowin model or equivalent modeling software:
      1) Native Biowin model files showing performance at all design conditions, including between each process.
      2) Process flow diagram
      3) Design summary report
      4) biological kinetic rates, oxygen transfer kinetic rates, average MLSS at average and maximum day flow, sludge production volume with all inputs and assumptions

clearly stated.

h. Design calculations report including:
   1) membrane surface area, membrane bioreactor tank size,
   2) flow, flux, and transmembrane pressure (TMP) per unit and number of units at design conditions including ADF, PHF, MDF, and MMAF, MLSS, and water temperature.
   3) Membrane scour air flow and pressure requirements for normal operation, backwashing, and cleaning.
   4) Description of the system design flexibility and ability to consistently meet permit and redundancy requirements over range of design influent flow and load conditions.

i. Membrane cleaning: description of cleaning processes with protocol, chemical cleaning equipment and chemical storage requirements, bulk chemical list, flow and chemical concentration (if diluted), and chemical use estimates for cleaning-related systems including, but not limited to membrane backwash, membrane relaxation, clean in place.

   Protocols shall clearly outline duration, frequency and annual chemical use estimates, tank status (drain prior to chemical addition, chemical addition with tank mixed liquor in place, etc.), neutralization requirements (if applicable), spent chemical disposal location or method for maintenance clean, recovery cleans, and any other routine or periodic membrane cleaning. Protocol shall describe the procedure for taking membrane tank off-line and on-line. Proprietary chemicals are not allowed.

j. Supplier shall define the fine screening requirements for their membrane system including maximum screen aperture and opening type. A maximum screen aperture of 2 mm with punched hole or woven wire mesh shall be incorporated into the facility by the General Contractor. The Supplier shall clearly indicate if a smaller opening size or aperture type is required.

k. Schedule: Supplier shall provide schedule of shop drawings and equipment lead times.

4. Description of Training Services
5. Description of Technical Support Services including but not limited to 24/7 phone support, web-based support, operator forums, remote dial-in Supplier assistance, and availability of optional service and support.
6. Bidding Documents, including but not limited to Bid Form and Evaluated Bid Tables.
7. Maintenance Documents, including but not limited to:
   a. Replacement procedures for replacing or repairing the smallest membrane component that can be replaced for maintenance or failure independently of the entire unit.
   b. Cassette removal and reinstallation procedures.
   c. Cassette levelling and adjustment procedures, if applicable.

B. Design and Shop Drawing Submittals: Following the evaluated bid and selection of the successful Supplier, Selected Supplier shall submit the following:
   1. Design Submittals:
      a. Updated Design Calculations: Provide any updated or revised design submittals as outlined in Paragraph 1.6A.3 based upon final layout and general management plan supplied by the engineer.
      b. Supplier shall perform analysis of biological process design using EnviroSim Biowin wastewater modeling software or approved alternative sofrware and support Engineer in verification.
      c. For all scope of supply equipment:
         1) Cut sheets, including materials of construction, dimensions, size, material of construction, installation details, power supply voltage, wiring, and location
         2) Pump performance curves with minimum, maximum, and design duty flow and TDH; efficiency data, motor horsepower and voltage. If VFD, provide turndown

curves.

3) Aeration blower performance curves with minimum, maximum, and design air flow and discharge pressure, efficiency data, motor horsepower and voltage. Turndown curves. If VFD, provide turndown curves.
4) Mixer velocity distribution profiles or CMD modeling.
5) Chemical cleaning systems
6) Valves: Provide valve schedule with information on valve type, diameter, materials of construction, end type, operator, and pressure rating.

d. Power supply, wiring and control diagrams. Complete wiring and control diagrams that show the point of connection for the power supply and control system.
e. Instrumentation schedule: Device listing, tag number, manufacturer, model number, measured parameter, and ranges for instruments and devices, accessories for installation and accompanying mounting details, etc.
f. Process control narratives (functional control description) and electronic files associated with programming logic, screen layouts of the control and data screens, and a list of all information exchanged with plant control system.
g. Electronic drawings for all process equipment, including process tanks, membrane units, permeate pumps, and other major equipment listed in the Scope of Supply.
h. Control panels:
    1) Drawings with interior and exterior layouts, components, panel dimensions, and panel materials of construction and NEMA rating.
    2) Control panel component manufacturer's literature, clearly denoting model numbers of all PLC components, relays, terminal blocks, power supplies, buttons, switches, fuse blocks, etc.
    3) Control panel wiring schematics
i. Description of the control system and PLC's distribution control systems or other control platform software and integration of the MBR system in the overall plant control system. MBR system controls include but not limited to bioreactor equipment, membranes, permeate pumps, blowers, chemical feed systems, backwash pumps, and process monitoring.
j. Permitting support, if requested, including design information, updated plans, procedures, and testing.
k. Any specialized installation instructions which need to be included in General Contractor Installation Contract Bid Documents.

2. Description of Supplier's remote monitoring application including security protection.
3. Shop Drawings:
    1) Submit detail drawings showing installation and assembly details including piping connection details, setting drawings, cast-in-place items, templates, location of lifting lugs/points, and details of anchorage.
    2) The supplying equipment manufacturer shall note any dimensional deviations from the construction plans. Differences shall be duly noted for approval by the Engineer.
    3) Complete installation procedures of sufficient detail to facilitate direct field construction and erection by the Contractor.
    4) System Startup and Functional Testing Procedures: Detailed start-up procedures, forms, and checklists.,
    5) Commissioning and performance testing schedule and procedures: Membrane cleaning, flux and transmembrane pressure validation test procedures, inlet water quality verification requirements, effluent water quality verification requirements, test reports requirements, panel FAT.
    6) Product Data: Catalog data consisting of specifications, illustrations and a parts schedule that identifies the materials to be used for the various system components

and accessories. Submit list of materials of construction.

7) Training submittals: Submit electronic copies of all training materials prior to system startup, testing, and demonstration.

8) Qualifications Statements:

a) Submit welding certifications, as per the above requirements.

C. Closeout Submittals, including the following:

1. Operation and Maintenance Data per Section 017823 and as follows:

a. Submit complete installation, operation, and maintenance manuals including general arrangement drawings, complete bill of materials, safety data sheets, test reports, maintenance data and schedules, description of operation and spare parts information. Manuals shall describe the system components, system and component specifications, standard operating procedures, limitations (including conditions to be avoided or that could damage the equipment), and operation and maintenance procedures. Data tables shall be included to show typical operating set points and conditions. Manuals shall also include programming logic, control and data screens, and list of information exchanged with plant control system.

2. Record Drawings: After start-up of the system, supplier shall provide "as built" plans and drawings, control and wiring schematics for Supplier scope of supply.

1.7 WARRANTY

A. Membrane warranties shall cover the following items:

1. Repair or replacement of any failed membranes or modules. Failure is defined as any of the following:

a. Inability to meet production capacity requirements as specified herein.

b. Inability to meet TSS and turbidity requirements as specified herein.

c. Frequent fouling replacement of membranes.

2. The MBR System Supplier shall provide field service supervision for inspection and dismantling, and reinstallation of the equipment.

B. Membrane Warranty:

1. The Supplier's warranty shall be applicable for a period of ten (10) years from substantial completion.

a. If membrane replacement is necessary, the first 60 months shall be a full replacement, with the remaining 60 months pro-rated.

2. The membrane system Supplier shall provide field service supervision, labor and tool activities of all warranty related repairs during the first 60 months and the Owner will pay for any of the warranty-related labor and tool activities during the remaining 60 months.

3. The Owner will be responsible for providing a nearby laydown area for the storage of equipment or membrane modules removed or delivered during any warranty related activities as well as any utilities required to perform the warranty work.

4. The Owner shall not be required to monitor, report, record instrument data for the purpose of maintaining warranty coverage outside of providing a reliable, high-speed internet connection to the MBR system controls and maintaining manual records of influent and effluent quality, MBR basin MLSS, membrane cleaning activities and chemical use data. In the event where internet connection is lost, Supplier shall notify Owner and request local SCADA download for missing data.

C. Equipment and Controls Warranty: The Supplier's warranty shall extend for a period of two (2) years from the date of substantial completion for all other (i.e., non-membrane) equipment and process systems provided by the Supplier.

D. Compliance Statement: The Supplier shall submit a Compliance Statement confirming the type of membrane proposed and that the proposed MBR system meets performance and operating criteria as outlined in Contract Documents. Compliance Statement shall list deviations to the specifications. Compliance Statement shall acknowledge Warranty and Performance Bond requirements. Compliance Statement shall state specific exclusions to failure conditions covered by Membrane Warranty.

1.8 SPARE PARTS AND SPECIAL TOOLS

A. Provide the following in addition to any other process-critical recommended spare parts:

SPARE PART	QUANTITY
Membrane lifting tool (Overhead monorail or crane will be provided by Buyer)	As Needed
One repair kit for sealing off or replacement of damaged membrane element.	As Needed
One set of special tools required for normal operation and maintenance of the MBR Units.	1 Set
Pressure Gauge	2 of each range
Level Probe & Transmission	1 of each type
ORP/DO/PH/Turbidity/Temp Probes	1 of each type
Chemical Feed Pumps	-
Pump Seals	1 for each pump/each type
Blower Belts	3 sets
Blower Inlet Filters	3 sets
Valves and Actuators	1 of each size
Diffusers	2% of total

PART 2 – PRODUCTS

2.1 SYSTEM PERFORMANCE CRITERIA

A. Performance Criteria: The equipment shall be designed and installed to meet or exceed the following effluent water quality limits at the PHF Maximum Monthly Daily Flow and water quality characteristics in Paragraph 2.1B:

1. Effluent Water Quality:
   a. BOD : ≤ 5.0 mg/L, monthly average
   b. TSS : ≤ 5.0 mg/L, monthly average
   c. Turbidity : ≤ 1.0 NTU,
   d. Ammonia (Oct 1ST – May 31ST) : < 1.8 mg-N/L
   e. Ammonia (Jun 1st – Sep 30th) : <1.2 mg-N/L
   f. Phenuls :5ugll

B. Design Criteria: The membrane and bioreactor system equipment shall be designed to perform satisfactorily and as specified when operated under the following conditions:

1. Bioreactor:
   a. Provide bioreactor equipment specified herein for three parallel treatment trains, each capable of operating completely independent of the other. Influent, effluent, interconnecting and drain valves will be sized and provided by Others.
   b. Hydraulic capacity of each parallel train shall be designed for Peak Hourly Flow[BG(2)] with all treatment trains in service.
   c. Bioreactor volume and SRT shall be selected as follows:
      1) Minimum aerobic SRT (excluding membrane tanks): 13 days
   d. Biological treatment capacity of MBR system, including process tank volume, aeration, and membranes, shall be designed for Maximum Month Daily Flow at Design Influent Average Water Quality loading, with all treatment trains in service.

2. Influent Flow Rates:

a.	Minimum Flow	:3.0 [BG(3)]MGD
b.	Average Daily Flow (ADF)	:5.0 MGD
c.	Maximum Monthly Average Daily Flow (MMAF)	:8.0 MGD
d.	Maximum Day Flow (MDF)	:11.0 MGD
e.	Peak Hourly Flow (UPHF)	:16.5 MGD

3. Design Influent Average Water Quality to the MBR post-clarification assuming clarification removed of 60% TSS and 30% BOD:

a.	Temperature (minimum design temperature)	: 10 degrees C
b.	pH	: 6 to 9 S.U.
c.	BOD	: 98 mg/L
d.	TSS	: 74 mg/L
e.	Ammonia	: 18 mg/L
f.	Total Kjeldahl Nitrogen (TKN)	: 27 mg/L
g.	Total Phosphorus (TP)	: 6.0 mg/L
h.	Alkalinity (as calcium carbonate)	: 225 mg/L
i.	Phenuls	:11 ugll

4. Process Configuration:
   a. Reactor configuration is required to provide biological removal of BOD and ammonia nitrogen based on:
      1) MLE, consisting of Anoxic and Aeration, zones. The membrane tank volume shall not be included in determination of the Aeration zone sizing for nitrification.
      2) Maximum MLSS: 8,000 mg/L under data demonstrating installations operating successfully at higher concentration is provided.
   b. Bioreactor dimensions:
      1) Bioreactor basins shall be sized to accommodate site constraints as shown on the project site plans.
      2) Total depth shall include a minimum freeboard of 36-inches.
   c. Treatment trains shall be capable of independent operation.
   d. Channels and piping between reactors and within a reactor (recycle, bypass/overflow) shall be sized for the Peak Hour Flow with consideration given to maintaining self-cleansing

velocities to keep solids in suspension at minimum flows.

e. Reactor inlet, effluent and drain valves will be provided by the General Contractor. The supplier shall provide recommended signing and location.

5. Process characteristics
   a. Site elevation (approximate) : 140 feet
   b. Ambient air temperature : 15 to 100 degrees Fahrenheit
   c. Hydraulic Retention Time (HRT) at MMAF:
      1) Anoxic Tanks : ≥ 1 hour
   d. MLSS (see 2.1.B.4.b.2)
      1) Anoxic Zone MLSS : ≤ 8,000 mg/L
      2) Aeration Zone MLSS : ≤ 8,000 mg/L
      3) MBR Zone MLSS :10,000 to 12,000 mg/L
   e. Recycle rate from membrane tanks: :3-5 times influent flow at MMF
   f. Aeration:
      1) Oxygen requirement: At least 1.25 pounds oxygen per pound of influent BOD and 4.6 pounds oxygen per pound of influent TKN at MMAF.
      2) Dissolved oxygen levels in the Aerobic Zone shall be ≥2.0 mg/L at MMAF and ≥1.0 mg/L at MDF.

6. Membrane System Configuration:
   a. Four (4) to six (6) parallel membrane trains shall be provided.
   b. The membrane system must be sized to hydraulically treat 100% of MDF with one train out of service for ≤ 24-hours with one complete membrane train out of service for any reason.
   c. Membrane tank inlet valves will be provided by the General Contractor.
   d. Provide a level transmitter and two-level switches for each membrane train.
   e. Provide tank drain valves and telescoping valves (if applicable) for RAS if a feed forward design if proposed.
7. Membrane Characteristics:
   a. Membrane shall be chemically resistant to high (>1,000 mg/L) chlorine concentrations and any other chemicals used in cleaning procedures and be able to tolerate a pH range of 1 to 10.
   b. Membrane shall be non-biodegradable.
   c. Membrane shall be made from the following materials:
      1) Hollow fiber or flat sheet membrane
         a) Polyvinylidene fluoride (PVDF)
         b) Chorinated polyethylene
   d. Nominal pore size: 0.1 to 0.4 µm
   e. Maximum Design Net Flux Rates
      1) ADF: 12.5 gfd
      2) MMF: 14.0 gfd
      3) MDF: 19.6 gfd
      4) PHF: 22.2 gfd
   f. Transmembrane Pressure:
      1) TMP range shall be between 0.1 psi and 8.0 psi.
8. Membrane cleaning: Membrane cleaning shall include:
   a. Air scour as recommended by the manufacturer to prevent localized dewatering and

solids accumulation.

b. Manufacturer recommended cleaning protocol to maintain specified flux requirements while maintaining maximum membrane life. Cleaning protocols may include in-situ back-flushing, membrane relaxation, and/or chemical cleaning; however, all cleaning protocols must be fully automated. Chemicals used in cleaning at recommended concentrations shall not impact biological treatment and must be accounted for in membrane life.

9. Area classification shall be as follows:
   a. Per NFPA 820, open to atmosphere biological reactors preceded by primary sedimentation) are unclassified.
   b. Permeate pump room is unclassified.

C. Process Instrumentation and Control:
1. The Supplier shall provide all instruments that they require to operate and control the biological and membrane systems in their scope of supply regardless if the instrument is identified in the specification. All instruments shall be monitored and trended on the Supplier's operator interface/HMI.
2. Control systems: Automatic systems shall be provided to control all Supplier provided equipment. Status and performance data shall be communicated to Suppliers PLC and HMI control panel. Local indication of instantaneous and cumulative (if applicable) shall be provided for all process instrumentation including but not limited to flow meters, dissolved oxygen, pH, and pressure transmitters.
3. Bioreactors:
   a. Control of inlet and outlet slide gates if automated. Slide gates to be provided by General Contractor.
4. Anoxic basins:
   a. Level, ORP, PH probes and transmitters (if feed forward pumping employed)
5. Aeration basins:
   a. DO probe and transmitters
   b. pH probe and transmitters (transmitter may be common with DO probe)
   c. Level switch high
6. RAS Pumps
   a. Discharge and suction side pressure gauges, each pump
   b. Flow meter
7. Feed Forward Pumps:
   a. Discharge pressure gauge, each pump
   b. Flow meter (one per bioreactor train)
8. Permeate Pumps:
   a. Discharge and suction side pressure transmitter and gauges, each pump
   b. High pressure switch – pump shutoff in each direction, each pump
   c. Flow meter
   d. Turbidity probe and transmitters (Inline or Sidestream)
   e. Temperature probe and transmitter (Common permeate header)
9. WAS Pumps:
   a. Suction and discharge pressure gauges, each pump
   b. Flow meter
   c. High pressure switch – pump shutoff, each pump
10. Backpulse Tank (if applicable):

a. Level transmitter

11. Membrane CIP:
    a. Bulk chemical storage will by provided by the General Contractor
    b. Skid or wall panel mounted chemical metering pumps (duty and standby units, each chemical)
    c. Flow meter (each chemical) for centrifugal chemical pumps. Flow meters are not required for PD style chemical metering pumps.
    d. Level probe and transmitter (each day tank)
12. Process Chemicals:
    a. Bulk chemical storage will be provided by the General Contractor
    b. Skid or wall panel mounted chemical metering pumps (duty and standby units, each chemical)
    c. Provide with each metering pumps: pressure control valves, backpressure valves, pulsation dampeners, pressure gauges, calibration column, suction and discharge isolation valves, and drain valves.
    d. Provide isolation valve, manual flow control valve and backpressure valve at each chemical dosing location.
    e. Level probe and transmitter (each day tank)
13. At a minimum, provide the following membrane and permeate data measurements at 15 min intervals, local display, and recording up to 30-day duration:
    a. Permeate turbidity shall be monitored in each train
    b. Membrane process control:
        1) Analog values for:
            a) Dissolved oxygen in Aeration tank
            b) Permeate pressure during filtration
            c) Permeate pressure during backwash, cleaning, and/or relaxation
            d) Permeate flow during filtration
            e) Permeate turbidity
            f) Permeate temperature
            g) pH in Aeration tank
            h) Mixed liquor feed or RAS return flow
            i) MBR tank level
            j) Waste activated sludge flow
        2) Digital counts:
            a) Permeate quantity during filtration
            b) WAS volume
        3) Calculated results for:
            a) Transmembrane pressure (TMP)
            b) Permeate flux rate (gfd)

2.2 MATERIALS

A. All fabricated items inside the membrane reactor shall be constructed from 316L stainless steel materials unless noted otherwise.

B. All fasteners inside the membrane reactor shall be constructed from 316L stainless steel materials. Fasteners for anchoring cassette wall brackets to the basin walls will be provided by the General Contractor.

C. The equipment manufacturer shall supply all materials necessary for properly installing the

membrane reactor system unless noted otherwise.

2.3 MEMBRANE UNITS

A. Membrane units shall be installed in individual membrane trains connected to dedicated permeate pumps and separated from the bioreactor tanks by a common influent distribution channel.

B. Supplier shall provide in-basin interconnecting membrane air and permeate headers, drop pipes and isolation valves to a flanged connection of the permeate and aeration headers located at discharge end of the collection headers. Each membrane unit shall have an isolation valve on the permeate and aeration pipes such that a single unit can be removed from service while keeping the others in operation.

C. With the exception of concrete wall anchors, Suppler shall provide all fasteners, nuts, bolts, screws, cables, washers and other appurtenances associated with membrane units and in-basin piping and appurtenances.

D. All pipe supports shall be provided by the General Contractor.

E. Supplier shall provide the tank mounting frames and hardware for membrane units. Hot retrieval mounting shall have the ability to readily remove one complete membrane unit, with a single pick without draining the membrane bioreactor and without taking other membrane units within the same tank off-line. **Double pick cassette removal will not be accepted.**

2.4 CHEMICAL SYSTEMS FOR MEMBRANE CLEANING

A. The Cleaning Systems shall include backwash, maintenance clean, and recovery clean systems as required by the Supplier's specific systems.

B. Cleaning Systems shall be inclusive of all chemical feed day tanks, panel mounted or skid mounted chemical feed pumps (duty and standby), valves, instrumentation, controls, and all other ancillary equipment necessary for a complete cleaning operation. Chemical bulk storage tanks and chemical loading and transfer facilities and equipment will be provided by the General Contractor.

C. Supplier shall define chemical volumes and estimated building space to be allotted for all Cleaning systems, including space for:
   1. Day tanks (30-hour supply)
   2. Cleaning system equipment
   3. Neutralization of spent chemicals (if applicable)

D. The system shall be designed to clean the membranes in-place without requiring their removal from the membrane tanks.

E. The cleaning systems shall be sized to clean one Membrane train at a time and allow the other Membrane trains to remain in production. The remaining trains online must hydraulically treat 100% of MDF at all times during the cleaning event.

F. All components of the cleaning systems shall be compatible with cleaning solutions recommended by the Supplier for its system.

G. Potable water (if required) shall be provided by the Owner for dilution water.

H. All equipment shall be provided with shutoff valves for isolation or bypass, to allow continued

operation of other equipment.

I. Centrifugal Chemical Pumps for membrane cleaning shall be as specified below:

quantity	determined by Supplier; at least two (1 duty and 1 standby) per system
capacity range	sized by Supplier;
manufacturer	Finish Thompson or approved equal
assembly and accessories	Skid mounted including suction and discharge pressure gauges, electromagnetic flow meter, suction and discharge isolation valves, discharge control valves (as required) and drain valves.

J. Metering pumps for membrane cleaning shall be as specified below:

quantity	determined by Supplier; at least two (1 duty and 1 standby) per system
capacity range	sized by Supplier;
manufacturer	Prominent, LMI or approved equal
assembly and accessories	Panel or skid mounted including pressure control valves, backpressure valves, pulsation dampeners, pressure gauges, calibration column, suction and discharge isolation valves, and drain valves.

2.5 PERMEATE, BACKWASH SYSTEM

A. Provide permeate pumps as specified below:

quantity	determined by Supplier; minimum four, maximum six units
capacity range	sized by Supplier, as specified

pump manufacturer	Boerger, Vogelsang or approved equal
pump type	rotary lobe positive displacement (if centrifugal pumps are used, refer to Section 2.7 WAS pump requirements)
flanges	drilled to ANSI B16.1 Class 150 raised face
configuration	reversible (Bi-directional)
casing	cast or ductile iron
lobes	NBR
shaft & sleeve	non-product wetted, materials manufacturer standard
lubrication	flooded oil bath / quench lubricated; no seal flush required
bearings	manufacturer standard
seal type	single acting, oil quenched mechanical seal. Material: SIC/SIC (silicon carbide)
seal lubrication	Light weight oil
base plate	carbon steel, hot dipped galvanized
coupling	KTR flexible coupling
motor	TEFC, premium efficiency; NEMA design B; Class F insulation; Class F temperature rise; maximum Speed: 1800 rpm; service factor: 1.15 suitable for constant torque inverter duty (6-60 Hz; minimum turndown)

instruments	Magnetic flow meter, turbidity meter, membrane unit TMP transducer for each train
accessories	VFD , check valves, shutoff valves, inlet and discharge pressure gauges and pressure switches, and priming air ejector for each pump

B. The pumps shall convey permeate from membranes to the disinfection system in accordance with the design flows previously specified. The permeate pumps shall provide the capability of pumping a portion of the treated permeate back through the membranes in reverse direction of the normal flow path to reduce fouling of the membranes. Pumps shall be sized to handle peak instantaneous flow specified, as well as rates associated with backwashing, maintenance and recovery cleaning.

C. Permeate subsystem (pumps, instruments, accessories) shall be dedicated to each train.

2.6 FEED FORWARD (IF APPLICABLE)

A. Provide feed forward pumps as specified below:

quantity	determined by Supplier; minimum six (two per bioreactor train)
capacity range	sized by Supplier, as specified
pump manufacturer	Sulzer, Flygt, Wilo, KSB or approved equal
pump type	submersible non-clog sewage pump
drive	direct drive, no coupling
flanges	drilled to ANSI class 125 flange fitting

casing	cast iron
impeller	cast iron
shaft	1.4021 (ASTM 420) stainless steel
shaft seal	double seal system consisting of tandem double silicon carbide mechanical seal (up to 30hp); triple seal system consisting of tandem double silicon carbide mechanical seal and one lip seal (30hp above)
seal lubrication	oil lubricated
leakage protection	moisture sensor in oil chamber for bearing and motor protection
motor	submersible; squirrel cage; 3 phase induction shell type B design; maximum 3,600 rpm; stator insulation to Class H; three (3) thermal switches – one per phase wired in series
cable entry	cylindrical elastomer grommet with junction chamber on AFP/XFP (above 15hp)
mounting	submersible guide rail (2” or 3”)
accessories	VFD, cooling jacket, full monitoring system; lifting hoist and davit

B. Provide duty/standby feed forward pumps per bioreactor basin.

C. Provide check valves, shutoff valves to isolate or bypass one pump, while the other pump(s) remain in operation.

D. Provide magnetic flowmeter for feed forward flow per bioreactor basin.

E. If feed forward pumps are provided, RAS pumping may be eliminated. In such cases, return activated sludge may be gravity returned from the common RAS channel to the secondary influent distribution channel. Supplier shall provide necessary controls and instrumentation to automatically maintain feed forward flowrates over the range of 5 times influent max month flowrates.

2.7 RAS PUMPS

A. Provide RAS pumps as specified below:

quantity	determined by Supplier; minimum four (duty per train)
capacity range	sized by Supplier
pump manufacturer	Flowserve, Sulzer, Pentair Fairbanks, KSB or approved equal
pump type	end-suction centrifugal horizontal
flanges	drilled to ANSI B16.5 Class 150 Flange
casing / stuffing box cover	cast iron ASTM A48 CL35B (53/F0067)
impeller	ductile iron / 316 SS or duplex SS
shaft/sleeve	duplex steel (EN1.4460/AISI 329/SS2324)
lubrication	flooded oil
seal	cartridge single, open seal chamber, sleeve installation, SiC/SiC
seal lubrication	water - internal flush (no waste seal water generated)
base plate	Carbon steel
coupling	Rex-omega elastomeric / flexible or equal
motor	TEFC; foot mounted, 1,800 rpm maximum speed; variable speed
accessories	VFD

B. Provide check valves, shutoff valves to isolate or bypass one pump, while the other pump(s) remain in operation.

2.2 WAS PUMPS (IF APPLICABLE)

A. Provide WAS pumps as specified below:

quantity	determined by Supplier; minimum two (duty and standby)
capacity range	sized by Supplier
pump manufacturer	Flowserve, Sulzer, Pentair Fairbanks, KSB or approved equal
pump type	end-suction centrifugal horizontal
flanges	drilled to ANSI B16.5 Class 150 Flange
casing / stuffing box cover	cast iron – ASTM A48 CL35B (53/F0067)

impeller	ductile iron / 316 SS or duplex SS
shaft/sleeve	duplex steel (EN1.4460/AISI 329/SS2324)
lubrication	flooded oil
seal	cartridge single, open seal chamber, sleeve installation, SiC/SiC
seal lubrication	water - internal flush (no waste seal water generated)
base plate	carbon steel
coupling	Rex-omega elastomeric / flexible or equal
motor	TEFC; foot mounted, 1,800 rpm maximum speed; variable speed
accessories	VFD

B. Provide check valves, shutoff valves to isolate or bypass one pump, while the other pump(s) remain in operation.

C. In lieu of WAS pumps, Supplier shall supply a magnetic flowmeter, control valve and isolation valve for a sidestream WAS line to the sludge holding tank sized based on continuous wasting and to maintain MLSS in the bioreactors at <8,000 mg/L at all times.

2.3 MIXERS

A. Provide mixers as specified below:

quantity	determined by Supplier; minimum of one per anoxic reactor
capacity range	sized by Supplier; at least 5.0 hp, each
manufacturer	Sulzer, Flygt, Wilo, KSB or approved equal
type	submersible, retractable
impeller type	axial flow 2 or 3 self-cleaning backward curved blades
wetted parts	316 stainless steel
drive	direct drive, with gear box on large mixers
shaft seal type	Lower – silicon carbide/silicon carbide, nitrile, 316 SS Upper - silicon carbide/silicon carbide, nitrile, 316 SS
seal lubrication	oil lubricated
leakage protection	Moisture detection probe in oil chamber, motor and cable connection chamber
solid deflection ring	Nitrile (Buna-N)
mounting	submersible guide rail
motor	submersible; squirrel cage; 3 phase induction shell NEMA type B design; maximum 1,800 rpm; stator insulation to class F; 3 (three) thermal switches – one per phase wired in series
cable entry	compressible rubber grommet and o-ring
accessories	full SS construction; flow ring (316 SS); lifting hoist and davit

B. Mixing equipment shall be of the number, size, and location to provide adequate mixing at the proposed length, width, and depth throughout the intended mixing phase. This determination shall be

based on Supplier test data on tanks of similar geometry or CFD modeling.

C. Mixing system shall be:
   1. Effective to provide a complete basin mix with unobstructed mixing pattern.

2.4 BLOWERS

A. Provide blowers as specified below:

quantity	determined by Supplier; minimum three process aeration (2 duty, 1 standby), 3 membrane air scour (2 duty, 1 standby)
capacity range	Sized and located by Supplier
blower type	positive displacement rotary lobe, oil free
manufacturer	Aerzen, Kaeser Gardner Denver or approved equal
connections	plain pipe; silicone or rubber sleeve and clamps used to connect to discharge piping
casing & head plates	cast iron EN-GJL-200 (~ ASTM A48 class 30)
shaft	C45N (~ AISI 1043) to 2500 cfm and EN-G75-500-7 (~ ASTM 65-45-12) above 2500 cfm
rotors	ductile iron or forge steel C45N (~ AISI 1043) to 2500 cfm and EN-G75-500-7 (~ ASTM 65-45-12) above 2500cfm
drive	v-belt drive, automatic tension
guard	plate OSHA-rated V-belt drive guard
motor	TEFC, premium efficiency, NEMA frame, foot-mounted for belt-driven applications; 1800 or 3600 rpm, inverter duty rated
turndown	minimum 4 to 1
noise level	69 to 72 dBa with acoustic enclosure at 3 ft free-field conditions
accessories	air intake filter-inlet silencer, filter indication gauge, discharges silencer/base frame/hinged motor plate/anti-vibration mounts, discharge pressure gauge, discharge connection housing, spring-loaded discharge pressure relief valve, flapper-style integrated discharge check valve, discharge flexible sleeve and clamps for connection to process piping, auto-tensioned v-belt drive, v-belt safety guard, drive motor.
additional accessories	Indoor/outdoor sound enclosure built to meet MVSS 302 flammability standards. mechanical cooling fan (indoor or outdoor installation), High discharge temperature switch, mechanical unloading valve). Recommended spares (filter, V-belts, oil)

B. If one blower serves multiple bioreactor or membrane trains, there shall be sufficient turn down to service just one train, while the other train(s) is out of service for extended periods.

2.5 DIFFUSERS

A. Provide bioreactor diffusers as specified below:

quantity	determined by Supplier
capacity range	sized by Supplier
type	fine-bubble diffusers

manufacturer	EDI, Sanitaire, SSI, Ovivo or approved equal
membrane	disk or tube or panel
max design air flow rate per diffuser at max AOR	not to exceed 80% of diffuser's rated continuous operation capacity
droplegs & supports	316L stainless steel (AIS certification required on air headers, drop legs, and supports, but not on diffusers)
process connection	ANSI Flange 24" above tank wall
piping, connecting sleeve, tee and elbow	PVC (SDR 33.5 Sch 40, 80), CPVC, SS 304L, 316L
diffuser grid pipe supports and hardware	Included
check valve	n/a (the membrane is the check valve)
header pipe / mounting bracket	PVC
spare space	allowance for 10% blanked connections to install diffusers in the future, as necessary

2.6 VALVES AND ACTUATORS

A. Isolation valves on mixed liquor lines shall be plug or knife gate style as specified.

B. Wastewater check valves:

quantity	specified by Supplier with bid
type	wafer style double door / Swing style
manufacturer	Centreline 800 Series, RitePRO, or approved equal
style	wafer suitable for installation between ANSI # 150 flanges
body	cast iron
disc	316 stainless steel
shaft	316 stainless steel
seat	BUNA-N / EPDM

C. Butterfly valves:

quantity	specified by Supplier with bid
type	butterfly valve, resilient seated
manufacturer	Asahi, Keystone, Bray or approved equal
style	Lug pattern
operator	Asahi, Keystone, Bray
body	cast iron, epoxy coated
disc	nylon coated ductile iron

shaft	stainless steel
seat	EPDM

D. Wastewater plug valves:

quantity	specified by Supplier with bid
type	rectangular full port plug
manufacturer	DeZurik, Henry Pratt or approved equal
style	flanged ends, ANSI B16.1, Class 125
body	cast iron ASTM A126, Class B
plug	non-lubricated, eccentric type design with resilient plug facing
seat	raised seat with 1/8” welded nickel overlay
packing	Multiple V-ring type
operators	manual hand or chain wheel or electric modulating

E. Knife gate valves:

quantity	specified by Supplier with bid
manufacturer	Orbinox, trueline or equal
style	Lugged, AR series
body	GG25 (cast iron)
gate	304 stainless steel
shaft	carbon steel
seat	EPDM
manual operators	ll sizes handwheel operated

F. Ball valves:

quantity	specified by Supplier with bid
type	ball
applications	chemical feed lines
manufacturer	George Fischer, Asahi or approved equal
style	Tru-union
body, plug, shaft	PVC
seals	EPDM or viton (chemical dependent)
manual operators	manual lever
actuator	George Fischer, Asahi or approved equal

G. Solenoid valves:

quantity	specified by Supplier with bid
type	solenoid valve
service	air / water
manufacturer	Burkert, Asco or approved equal
style	FNPT, normally closed
body	316 stainless steel / brass
seal	EPDM
power	120VAC or 24VDC
power connection	0.5” NPT conduit, type H electrical

H. Pneumatic Valve Operators – General Service:

quantity	specified by Supplier with bid
manufacturer	Bray series 92 (series 94 for <24”), rotork or equal
operating pressure	550 kPa (80 psig)
body material	extruded aluminum alloy, anodized
travel stop	±5° at 0° and 90° positions
end caps	die cast aluminum alloy
pistons	die cast aluminum alloy
output shaft	carbon steel (zinc plated)
shaft bearings	Acetal
fasteners	stainless steel
‘o’-rings	Buna-N
air solenoid	NAMUR direct mount, 110VAC or 24VDC, NEMA 4, 4X
additional features	open and closing speed control
position control	electro-pneumatic bray 6A digital positioner; 4-20mA Input; NEMA4X enclosure (note: position control is only needed and therefore supplied on control valve applications).

I. Pneumatic Valve Operators – Knifegate Valve Service:

quantity	specified by Supplier with bid
manufacturer	Tyco, CMO or equal
operating pressure	550 kPa (80 psig)
tie rods for cover coupling	zinc coated steel
cylinder covers	cast iron, 2”-12” aluminum, 14” – 30” cast iron
piston connection	self-locking nut to assure fixation with nitrile o-ring
body	drawn aluminum jacket

upper piston seal	solid cast gum moulded on steel
piston	solid stainless steel
piston guide	RCH 1000 for low friction
'o' rings	Buna-N (nitrile)
air solenoid	4-way, NEMA 4
positional control	electro-pneumatic with 4-20 mA input (note: a positioner is only required on control valve applications)

2.7 PROCESS INSTRUMENTS

A. Electromagnetic Flowmeters:

quantity	specified by Supplier with bid
manufacturer	E&H or approved equal
series	Promag W400
process connections	ANSI #150 flanged
housing	Aluminum NEMA 4X
flowtube	304 stainless steel
liner	PTFE, polyurethane
accuracy	+/- 0.5%
operator interface	Local

output	4-20 mA DC, scaled pulse output
power / connection	85-260 VAC 60 Hz / 0.5" NPT
accessories	316 stainless mounting hardware, grounding rings/straps, spool piece for bypassing, calibrator suitable to calibrate all flow tubes

B. Rotameter:

quantity	specified by Supplier with bid
manufacturer	USGI Chemical, ABB or approved equal
series	Varea Meter
end fittings	Type 316 stainless
construction	Stainless steel frame, Borosilicate glass tube, stainless steel float
turndown	10:1
accuracy	2% of maximum flow
accessories	Check and needle valves, polycarbonate shield

C. Hydrostatic Level Transmitters:

quantity	specified by Supplier with bid
manufacturer	E&H or approved equal

application	top entry or side entry
series	FMB or FMX
process connections	1-1/2” to 3” 150 # flange (316 stainless steel)
mounting	1-1/2”, 2”, and 3” 150 # Flange (316 stainless steel) & 1-1/2” NPT connections available.
output signal	4-20 mA

voltage	10 to 30 VDC
diaphragm	ceramic
housing	aluminum NEMA 4X
integral LCD	yes

D. Pressure Transmitters:

quantity	specified by Supplier with bid
manufacturer	E&H or approved equal
model	Cerabar S PMC-71
mounting	0.5” NPT
output signal	4-20 mA
voltage	11.0 to 30 VDC
diaphragm	ceramic
housing	aluminum NEMA 4X
integral LCD	yes

E. Temperature Transmitters:

quantity	specified by Supplier with bid
manufacturer	E&H or approved equal
type	head mounted temperature, TH13
model	TR 11 RTD assembly
mounting	0.75” NPT process connection
power supply	24 V DC
output signal	4-20 mA
voltage	– 125 to 1200 mV
housing	transmitter installed in aluminum enclosure mounted directly on sensor
ambient temperature range	– 40 to 85 deg C

F. Turbidimeters:

quantity	specified by Supplier with bid
manufacturer	Hach or approved equal
model	TU5300 SC with SC200 controller
range	0-700 NTU
inlet	0.25” FNPT
outlet	0.25” FNPT
output signal	4-20 mA

power supply	120V/1ph/60 Hz
accessories	sensor, analyzer unit, interconnecting cable, alarm relays for indication of alarm conditions and one (1) Formazin Calibration Kit

G. Dissolved Oxygen Sensors/Analyzers:

quantity	specified by Supplier with bid
manufacturer	E&H, Hach or approved equal
model	LDO, with SC200 controller
range	0-20 mg/L
resolution	0.01 mg/L
output signal	2 x 4-20 mA
power supply	120V/1ph/60 Hz
display	LCD supplied on Signal Convertor
accessories	air blast cleaning assembly, sensor & float mounting assembly, signal converter.

H. pH Transmitters:

quantity	specified by Supplier with bid
manufacturer	E&H, Hach or approved equal
model	pHD-SC, with SC200 controller
range	0-14 pH
accuracy	+/- .05 pH
output signal	2 x 4-20 mA
power	120 VAC / 60 Hz / 1 phase
display	LCD
enclosure	NEMA 4X
Electrode	yiton body, glass filled flat electrode

I. Pressure Gauges:

quantity	specified by Supplier with bid
manufacturer	Ashcroft, Wika, McDaniel or approved equal
type	Liquid filled, with 316SS wetted parts
range	specified by Supplier
accessories	Isolation ball valve

J. Level Float Switch:

quantity	specified by Supplier with bid
manufacturer	Conery or approved equal
model	2900 series
type	enclosed, narrow angle, mechanical float switch
switch	single-pole, double throw (SPDT) type
float	ABS or polypropylene material, leak proof, shock proof, and impact resistant
electrical rating	10 amps at 120VAC

K. Pressure Switches:

quantity	specified by Supplier with bid
manufacturer	United Electric, Ashcroft or approved equal
type	Electronic, Digital Display, Programmable Dead band, Self-Diagnostic
material	316SS wetted parts and bellows
range	specified by Supplier
output signal	2 x 4-20 mA
power supply	24 V DC

L. Flow Switches:

quantity	specified by Supplier with bid
manufacturer	McDonnell and Miller, E&H or approved equal
type	swinging vane or piston type, variable orifice type; dual switches, each SPDT, minimum rating 5 A at 120 VAC
material	Type 316 stainless steel internal moving parts
range	Field adjustable switch setting
accuracy	switch accuracy and deadband shall be 5% of full range

2.8 PIPING

A. General:
1. MBR System air scour piping shall be schedule 10 Type 304 stainless steel.
2. Permeate piping shall be schedule 10 Type 316L.
3. Piping shall have welded, and/or ANSI Class 150 flanged connections.
4. Transitions from MBR Supplier piping to Contractor's piping shall use ANSI 150 pound flanges unless otherwise noted or coordinated with the Contractor.

B. PVC Schedule 80:
1. Piping conforming to ASTM D1785
2. Fittings conforming to ASTM D2467
3. Flanges: Schedule 80 solid socket flange

C. CPVC Schedule 80:
1. Piping conforming to ASTM F441
2. Fittings injection molded type
3. Flanges: Schedule 80 solid socket flange

D. Stainless Steel Piping:
1. Rolled pipe conforming to ASTM A778 for pipe >12". ASTM A312 for <12", ANSI B36.19
2. Cast fittings conforming to ASTM A778, ANSI B36.19 and ANSI B16.9
3. Fabricated pipe from sheet conforming to ASTM A240
4. Fabricated fittings from sheet conforming to ASTM A240
5. Fitting dimensions conform to ANSI B16.9
6. Flanges: weld neck or slip-on, Class 150

2.9 PROCESS CONTROL SYSTEM

A. General:
1. The MBR System controls shall be housed in a control panel. The control panel shall house the MBR system PLC, Operator Interface Terminal (OIT), software package, datalinks among control panels and Ethernet Network link with the Main Plant Control System. The control panel PLC shall be sized to handle all I/O from membrane equipment supplier, with 10% spare I/O available for other WWTP equipment.
2. The membrane equipment supplier shall be responsible for all programming for the MBR System PLC and OIT to control the operation of the Membrane Equipment System. The OIT shall contain graphical representations of all equipment and instrumentation and indication and trending of all process values.
3. The control panel design and IO distribution shall be as such that that a maximum of one train goes offline when one PLC IO rack is removed or taken out of service.
4. Contractor shall be responsible for installing wiring from field devices to the control paenl including the Ethernet links that may be required between the control panels.
5. Supplier shall reasonably demonstrate the basis for programming in the context of proven, standardized logic including applicable sub-routines, addressing strategy and nomenclature.
6. Source code shall be primarily programmed in ladder logic and made available to the Owner.
7. Human Machine Interface (HMI) or Graphical User Interface (GUI) screens shall be configured to accurately represent the process and process flow.

8. Representative HMI screenshots shall be provided that accurately represent the navigation and functionality of the proposed system.

B. MBR Control Panel:

1. Cabinet:
   a. Cabinets and panels with dimension 36 inches or greater shall be provided with removable lifting lugs. All doors shall be fitted with common keyed locks.
   b. Main control panel shall be located in the main electrical room and shall be painted carbon steel NEMA/UL Type 12 construction.
   c. All control panels located in the Process Area shall be minimum NEMA/UL Type 4 construction painted carbon steel.
   d. Cabinets and panels shall be provided with drawing pockets for panel drawings. One copy of the appropriate panel as-built drawings shall be furnished and left in the pocket of each panel.
   e. Cabinets and panels shall be prefabricated cabinets and panels by Hoffman, Rittal, Saginaw, or approved equal.
2. Programmable Logic Controller (PLC):
   a. Control and data acquisition associated with the MBR equipment shall be performed by a PLC.
   b. Each PLC shall be equipped with its own regulated power supply module energized from a standard, commercial 120 VAC 60 Hz, single phase source provided by the Uninterruptible Power Supply. Any power transformation, rectification, regulation, or other conditioning necessary shall be provided as part of the unit's power supply package. The module shall have sufficient capability to handle the power requirements for all the PLC components and I/O points, including the required, installed spare I/O capacity.
   c. The PLC shall be Allen-Bradley ControlLogix 1756-L7 Logix 5673. A minimum of 8 MB of user memory shall be installed. The memory supplied shall be sufficient to provide 20% unused capacity when the entire PLC program, as provided, is loaded and running. Provide industrial SD Card to maintain memory integrity of the PLC program following short-term power failures. PLC shall be capable of executing ladder logic, function blocks, structured text, and sequential flow chart logic.
   d. All I/O modules shall be provided with screw-type terminal blocks with barriers between adjacent terminals for connection of field inputs. Terminals shall be suitable for accepting up to and including No. 14 AWG wire. All terminals shall be provided with unique identification. All I/O modules shall be Allen-Bradley 1794 Series.
   e. The PLC shall communicate with the MBR SCADA system over an Ethernet network.
   f. I/O count shall be as required to implement the functional requirements of the system, with specified spare.
3. Network Switches and Modems:
   a. The MBR system control panel shall be provided with an industrial grade managed Ethernet Switch.
      1) Combined unit: Allen-Bradley Stratix 5700.
4. Operator Interface Terminal (OIT):
   a. The OIT shall be Allen Bradley PanelView graphic terminals with 9-inch or larger screens. The OIT shall display alarm messages, and provide fault and troubleshooting information.
5. Miscellaneous Requirements:

a. Provide ten percent (rounded up) spare fuses (minimum of 10) of each type and rating supplied.

PART 3 – EXECUTION

3.1 DESIGN ASSISTANCE

A. Design review: Supplier shall provide draft and final design submittals and review ancillary specifications provided by Engineer.

B. Electronic Files: Supplier shall provide electronic files for all process equipment in the Supplier's Scope of Supply.

C. BioWin Modeling: Supplier shall provide BioWin or equivalent modeling files for Engineer review and verification.

3.2 PROJECT SCHEDULE

A. Supplier shall provide equipment and services in accordance with Table 3-1. In addition to the time necessary to complete the requirements established within this specification and Contract Documents, Table also specifies the location and on-site days that shall be allowed for on-site visits in support of the services.

Table 3-1: Project Schedule

Deliverable	Due Date	On-Site Days	Location
Design Submittals Schedule Update (1.6B.1.a)	To be completed within 15 Days after Notice to Proceed.	N/A	N/A
Design Kick-off Meeting	To be completed within 20 Days after Notice to Proceed.	N/A	Teams
Bi-Weekly Status Conference Calls	For duration of design scope	N/A	Teams

Deliverable	Due Date	On-Site Days	Location
Submittal of 50% Design and Shop Submittals	12 weeks after Notice to Proceed	N/A	N/A
Submittal of 100% Design Documents	16 weeks after Notice to Proceed	N/A	N/A
Fabrication and Delivery	Per Contractor's schedule, construction contract anticipated to bid in March 2024 with Notice to Proceed in June 2024.	N/A	N/A
Mechanical Inspection	Per Contractor's schedule	5	New Windsor, NY
Start-Up, Testing and Commissioning	To be scheduled upon successful completion of Mechanical Inspection	45	New Windsor, NY
Demonstration/Performance Test	To be scheduled after successful start-up and testing.	10	New Windsor, NY
Operations and Maintenance Manuals	A minimum of 14 Days prior to start of Training		
Training	Training to be provided at the conclusion of the System Startup	5	New Windsor, NY
Minimum Total Days		65	
Minimum # Trips		7	

B. Supplier shall perform material inspection to verify completed shipment of material at unload, in accordance with its requirements.

C. Time spent remedying equipment deficiencies/problems shall not count toward the listed durations and trips.

3.3 CONTROL SYSTEM FACTORY ACCEPTANCE TEST

A. The Supplier shall coordinate and conduct a factory acceptance test (FAT) of the MBR control system during which:
   1. The PLC control logic and HMI operability shall be demonstrated by systematically forcing I/O to verify all controls functions and HMI screen representations defined in the system control narrative.
   2. The MBR control panel shall be inspected for completeness, and workmanship.

B. The Supplier shall provide a minimum of 2 weeks notice to the Owner and Engineer prior to the FAT. The Owner and Engineer may, at their option and expense, choose to attend and witness the FAT.

C. Whether or not the Owner and/or Engineer attend the FAT, the Supplier shall provide written documentation and certification of the completed FAT.

3.4 MECHANICAL AND INSTALLATION INSPECTION, AND START-UP

A. Inspection and start-up services shall be provided by a factory-trained representative of the Supplier who is a direct, full time employee of the Supplier.

B. The field service representative shall submit to the Engineer a written report stating that the MBR systems, including but not limited to MBR operation and cleaning operation(s), have been checked and are suitable for operation.

C. The start-up and demonstration testing protocol to be executed by the Supplier shall be submitted for approval to the Engineer.

D. Supplier shall furnish material, instrumentation, testing equipment, and personnel for conducting inspection, start-up, training, and commissioning services. All analytical testing will be provided by the Owner.

E. Supplier shall provide at least 7 trips for on-site mechanical inspection, start-up, demonstration, and training services as specified.

F. The representative shall be present on site for the following items:
   1. The first visit shall be for instruction and observation of the installation of equipment. At the start of the installation process, the Supplier shall inspect the tanks and MBR components to be installed in it to verify that the tank has been properly cleaned and prepared and the components are prepared for installation. The field service representative shall instruct the Contractor's personnel in what to observe and document. The field service representative shall also train the personnel performing the installation of the MBR system in the proper procedures for installation.
   2. The second visit shall be for checking and approving installation, prior to flow, or start-up, or demonstration.
   3. Visits 3-5 shall include the startup, testing, and demonstration of the MBR system including MBR trains, bioreactor equipment and ancillary systems. Training shall be conducted during this visit. Due to the length of this phase duration, and/or the need to utilize multiple team members, a minimum of three visits should be assumed for this phase.
   4. The sixth visit shall include commencement of Performance Testing. The supplier shall be onsite for the initial ten days of the performance test. If the system is operating satisfactorily, the supplier may leave site and provide remote monitoring of system performance for the duration of the performance test.
   5. One additional visit for support of the Engineer and Contractor as required shall be assumed by the system supplier.

G. All costs including travel, lodging, meals, and incidentals shall be considered as included in the Bid price.

3.5 PERFORMANCE TESTING

A. A 30-day performance test shall be conducted to confirm compliance of the biological and membrane equipment with the capacity and effluent quality parameters specified.

B. Commencement of performance testing shall begin within 14 days of completion of start-up, testing and commissioning of the facility, or 6 months after membrane delivery whichever occurs sooner.

C. Performance testing shall be provided by a factory-trained representative of the Supplier who is a direct, full time employee of the Supplier. Supplier shall be on-site for the initial 10 days of the testing and provide remote monitoring for the duration of the testing unless otherwise agreed in writing by Engineer and Owner.

D. Supplier shall be responsible for supporting the Engineer and Contractor during the test and shall

coordinate as necessary with the Engineer, Contractor and plant staff.

E. Testing shall begin after the MBR system is operational, the biological process is fully stabilized and the mixed liquor characteristics into the membrane tanks are within requirements.

F. The performance test shall be considered complete upon 30 consecutive days of operation without a significant failure due to the membrane system, and demonstration that the membrane system meets all performance requirements given herein.

G. A significant failure of the membrane system is one that:
   1. Decreases capacity below 75% for more than 24 hours
   2. Requires operator intervention to restart or re-establish normal operation of the control system

H. Failure to pass the Performance Test shall require a re-test of the system. The failure to pass the Performance Test shall require the Supplier to submit a written explanation for the failure and proposed remedy for evaluation by the Engineer prior to re-testing, subject to acceptance by the Engineer. If after a re-test, a repeat failure occurs and is determined to be due to non-performance by the Supplier or their equipment, remedy by the Supplier shall be up to and including installation of alternative or additional membranes or membrane equipment at no cost to the Owner.

3.6 TRAINING

A. Supplier shall provide training in the maintenance and operation of all systems included in the Supplier's control system and ancillary equipment as necessary to operate the biological (activated sludge) and membrane filtration processes to achieve treatment goals.

B. Supplier shall submit to Engineer written training materials at least 1 months prior to commissioning. Training shall be completed by Supplier prior to the completion of commissioning. All training shall be conducted at the Owner's office location (New Windsor, NY) or at the plant location (New Windsor, NY) by a factory-certified representative and full-time employee of the Supplier.

C. Training shall include classroom sessions on:
   1. Total nitrogen removal treatment process and configuration
   2. MBR operations, theory and important factors impacting flux and operation
   3. Membrane cleaning,
   4. MBR System troubleshooting, and maintenance.

D. Training shall also include hands-on training:
   1. Automatic and manual operation of process control panels and instrumentation such that operators can fully operate the biological and MBR system in manual or automatic mode, including but not limited to blowers, RAS pumps, feed pumps, permeate pumps, and cleaning systems.
   2. Navigation of all control panel and HMI screens and menus
   3. Changing process set-points
   4. All membrane cleaning operations (Backwash, Extended Maintenance Clean, Recovery Clean)
   5. Alarm conditions and power failure
   6. Troubleshooting

3.7 POST-CONSTRUCTION SUPPORT SERVICES

A. Supplier shall provide a digital database and monitoring system that contains operations and maintenance manuals, equipment information, and the ability to monitor the plant remotely by the

operators and the Supplier. The Owner shall only need to maintain internet access for the monitoring system to function with remote viewing access.

1. Supplier shall provide 24/7 technical phone support for the duration of the ten year warranty period.
2. Supplier shall provide remote monitoring of the membrane performance and annual performance reports highlighting concerns or suggestions for improvement for the first two years of the warranty period.
3. During the first year of the warranty period, Supplier shall provide (post-commissioning and as part of ongoing support services) a total of two service visits (two days on site each visit) by a field service representative at Owner's request.
4. Annual service visits for the remaining four years of the full (non-prorated) membrane warranty period, each visit lasting a minimum of two days (16 hours) onsite.

END OF SECTION

NOTE: TOPOGRAPHIC INFORMATION SHOWN WITHIN THESE LIMITS WERE FROM AN AERIAL FLIGHT BY COL-EAST FROM C.T.M. PROJECT NO. 14.4271 PROJECT NEW WINDSOR, NY 1"=20' WITH 2' CONTOURS CEI #28477 PREPARED FOR THE MOODNA WELLS PROJECT FOR MCGOEY, HAUSER AND EDSALL CONSULTING ENGINEERS, D.P.C.

BEDROCK DEPTH AT THIS LOCATION APPROXIMATELY 20' BELOW EXISTING GRADE BASED ON COMPLETED SOIL BORING

APPROXIMATE LIMITS ANTICIPATED FOR MBR TANKS/BUILDING CONSTRUCTION

BEDROCK DEPTH AT THESE LOCATIONS APPROXIMATELY 21' BELOW EXISTING GRADE BASED ON COMPLETED SOIL BORINGS

EXISTING SECONDARY SETTLING TANK #2 (T.B.R.)

EXISTING TRICKLING FILTER #2 (T.B.R.)

EXISTING TRICKLING FILTER #2 (T.B.R.)

EXISTING TRICKLING FILTER #1 (T.B.R.)

EXISTING SECONDARY SETTLING TANK #1 (T.B.R.)

LANDS NOW OR FORMERLY OF
TOWN OF NEW WINDSOR
BOOK 1619 PAGE 1146
TAX MAP ID 37-1-38
Deed: Call is to the centerline of Ceasers Lane.

EXISTING PRIMARY SETTLING TANK #2

EXISTING PRIMARY SETTLING TANK #3

PROPOSED PRIMARY SETTLING TANK #4

EXISTING PRIMARY SETTLING TANK #1

EX. GRIT SYSTEM

PROPOSED MECHANICAL BARSCREEN

EXISTING BARSCREEN

EXISTING GRAVITY SLUDGE THICKENER

EXISTING GRAVITY SLUDGE THICKENER

PROPOSED CONTROL BUILDING

TOPOGRAPHIC INFORMATION SHOWN WITHIN THESE LIMITS WERE FROM AN AERIAL FLIGHT BY COL-EAST FROM C.T.M. PROJECT NO. 14.4271 PROJECT NEW WINDSOR, NY 1"=20' WITH 2' CONTOURS CEI #28477 PREPARED FOR THE MOODNA WELLS PROJECT FOR MCGOEY, HAUSER AND EDSALL CONSULTING ENGINEERS, D.P.C.

LANDS NOW OR FORMERLY OF
TOWN OF NEW WINDSOR
BOOK 1619 PAGE 1146
TAX MAP ID 37-1-38
Deed: Call is to the centerline of Ceasers Lane.

EXISTING DISINFECTION TANK

EXISTING CHEMICAL FEED BLDG.

EXISTING CONTROL BLDG. (TO BE CONVERTED TO SLUDGE DEWATERING)

MOODNA CREEK

LIMITED FIELD LOCATIONS IN THIS AREA TO GENERATE ACCURATE BATHYMETRIC DATA

LANDS NOW OR FORMERLY OF
TOWN OF NEW WINDSOR
BOOK 2022 PAGE 921
TAX MAP ID 37-1-35.2
Deed: Call is to the centerline of Caesers Lane.

LANDS NOW OR FORMERLY OF
R & G TERMINAL PARTNERS, LLC
BOOK 14066 PAGE 780
TAX MAP ID 37-1-35.1
Deed: Call is to the centerline of Caesers Lane.

ARROW SIGN

ARROW SIGN

CAESARS LANE

GRAPHIC SCALE
30 0 15 30 60 120
1 inch = 30 feet

MHE ENGINEERING
33 Airport Center Drive, Suite 202
New Windsor, NY 12553
(845) 567-3100
111 Wheatfield Drive, Suite 1
Milford, PA 18337
(570) 296-2765

SCHEMATIC DESIGN

Dig Safely. New York Call811 before you dig

UNAUTHORIZED ADDITION OR ALTERATION OF THIS PLAN IS A VIOLATION OF SECTION 7209(2) OF THE NEW YORK STATE EDUCATION LAW.

ALL PRODUCTION & INTELLECTUAL PROPERTY RIGHT RESERVED ©

CAESARS LANE WWTP EXPANSION PHASE

FOR TOWN OF NEW WINDSOR
555 UNION AVE.
NEW WINDSOR, NY 12553

OVERALL CONCEPT PLAN

REVISIONS

NO.	DESCRIPTION	DATE

ISSUED DATE:	13 MAY, 2022
DESIGN BY:	MJS
DRAWN BY:	HPBJr
CHECKED BY:	MJS
REVIEWED BY:	MJS, JZ

SHEET NO.

SK-1

PROJECT # 18-732 PHASE #

F:\2018\18-732 Caesar Lane WWTP Improvements\Drafting\OVERALL CONCEPT PLAN 4-14-22.dwg, SHEET 1, 5/12/2022 8:09:31 AM

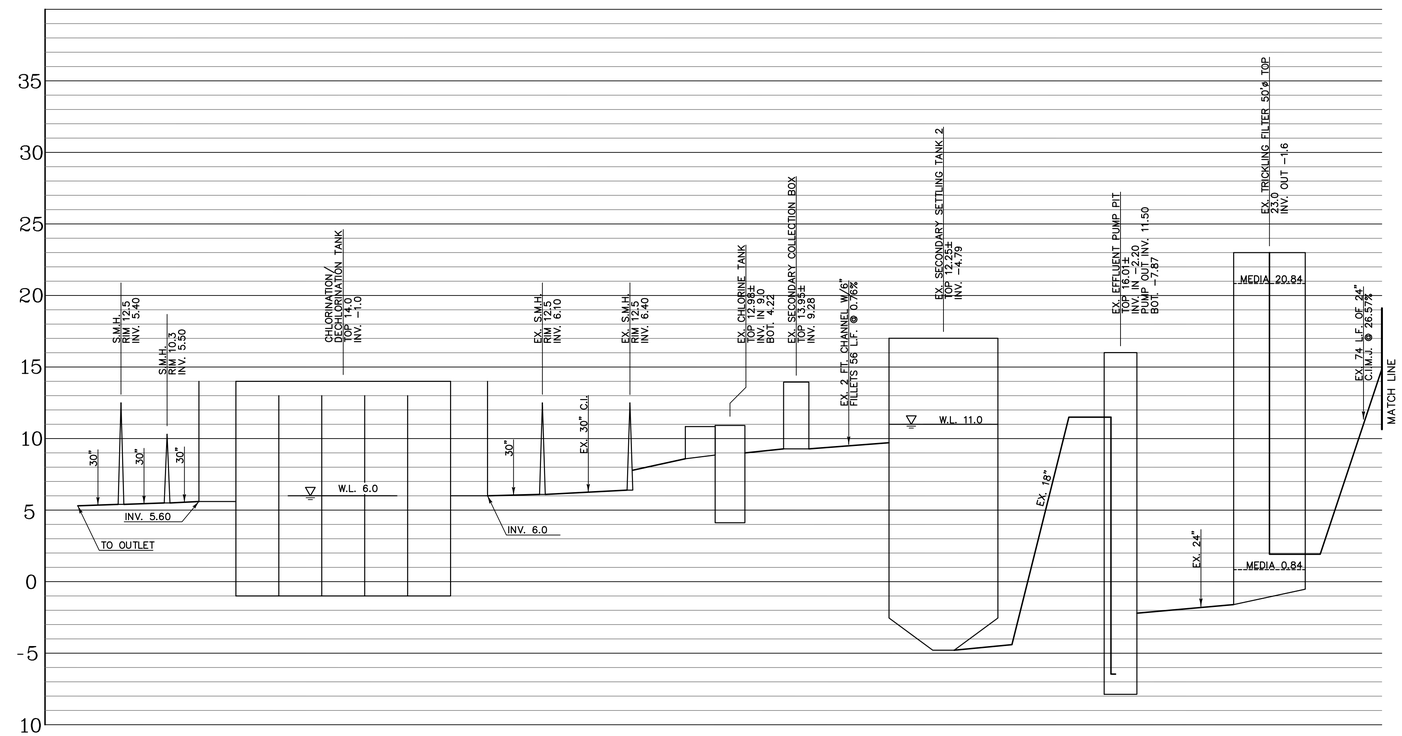

HYDRAULIC FLOW DIAGRAM

SCALES: HORIZ. NONE, VERT. 1"=5'

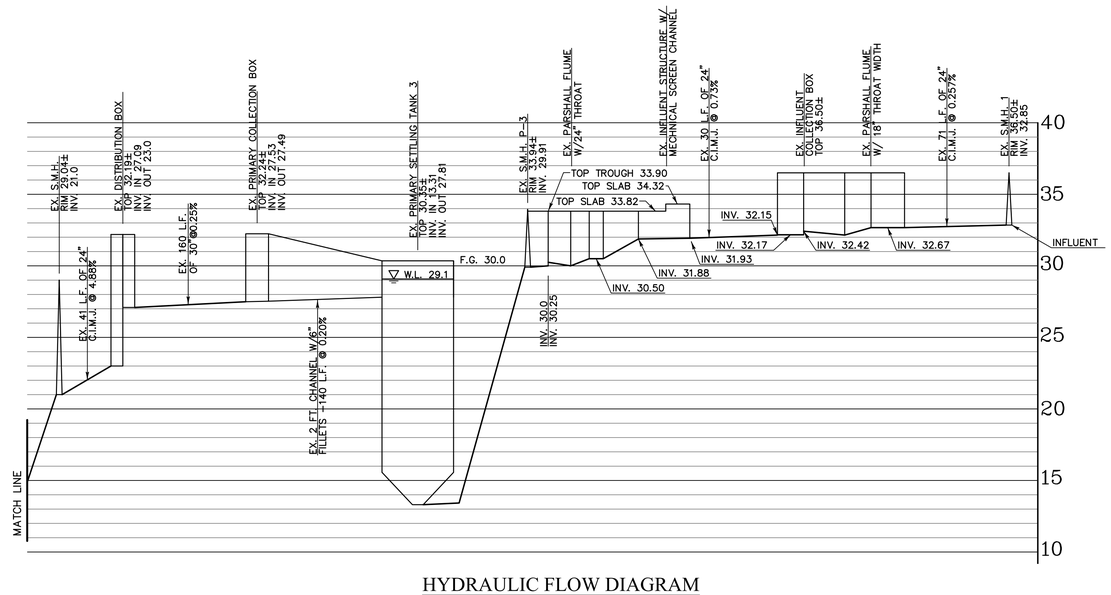

HYDRAULIC FLOW DIAGRAM

SCALES: HORIZ. NONE, VERT. 1"=5'

ENGINEERING

33 Airport Center Drive, Suite 202
New Windsor, NY 12553
(845) 567-3100

111 Wheatfield Drive, Suite 1
Milford, PA 18337
(570) 296-2765

SCHEMATIC DESIGN

Dig Safely. New York
Call811
before you dig

UNAUTHORIZED ADDITION OR ALTERATION OF THIS PLAN IS A VIOLATION OF SECTION 7209(2) OF THE NEW YORK STATE EDUCATION LAW.

ALL PRODUCTION & INTELLECTUAL PROPERTY RIGHT RESERVED ©

CAESARS LANE WWTP
EXPANSION PHASE

FOR TOWN OF NEW WINDSOR
555 UNION AVE.
NEW WINDSOR, NY 12553

EXISTING
HYDRAULIC GRADE

REVISIONS

NO.	DESCRIPTION	DATE

ISSUED DATE:	13 MAY, 2022
DESIGN BY:	MJS
DRAWN BY:	HPBJr/TJA
CHECKED BY:	MJS
REVIEWED BY:	MJS, JZ

SHEET NO.

HG-1

PROJECT # 18-732 PHASE # 1-2

F:\2018\18-732 Caesar Lane WWTP Improvements\Drafting\Hydaulic Grade.dwg, HG-1, 5/12/2022 8:09:38 AM

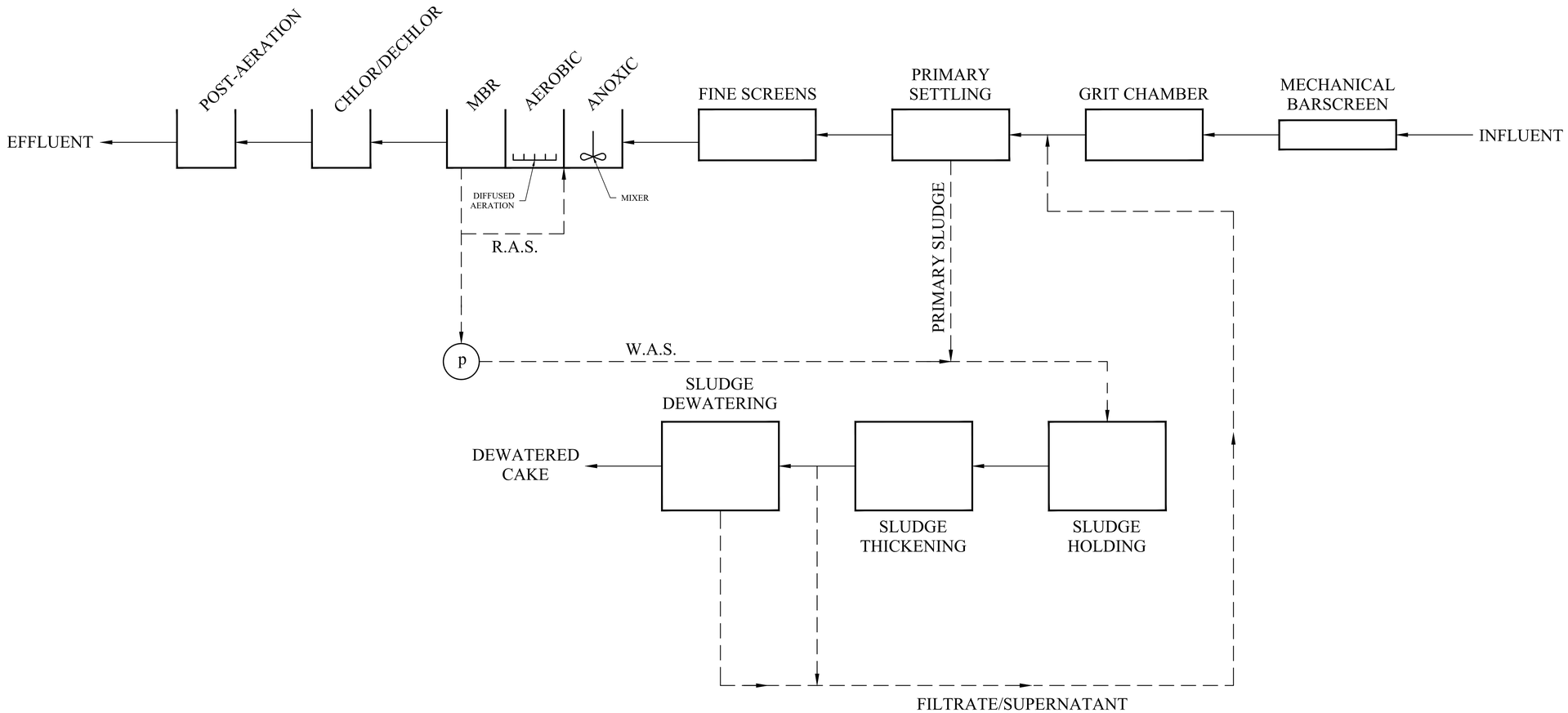

PROPOSED PROCESS SCHEMATIC
SCALE: NONE

ENGINEERING
33 Airport Center Drive, Suite 202
New Windsor, NY 12553
(845) 567-3100
111 Wheatfield Drive, Suite 1
Milford, PA 18337
(570) 296-2765

SCHEMATIC DESIGN

Dig Safely. New York
Call811 before you dig

UNAUTHORIZED ADDITION OR ALTERATION OF THIS PLAN IS A VIOLATION OF SECTION 7209(2) OF THE NEW YORK STATE EDUCATION LAW.

ALL PRODUCTION & INTELLECTUAL PROPERTY RIGHT RESERVED ©

CAESARS LANE WWTP EXPANSION PHASE

FOR TOWN OF NEW WINDSOR
555 UNION AVE.
NEW WINDSOR, NY 12553

PROPOSED PROCESS SCHEMATIC

REVISIONS

NO.	DESCRIPTION	DATE

ISSUED DATE:	13 MAY, 2022
DESIGN BY:	MJS
DRAWN BY:	HPBJr/TJA
CHECKED BY:	MJS
REVIEWED BY:	MJS, JZ

SHEET NO.

PRO-1

PROJECT # 18-732 PHASE # 1-2

F:\2018\18-732 Caesar Lane WWTP Improvements\Drafting\PROCESS SCHEMATIC.dwg, HP-101, 5/12/2022 8:59:47 AM

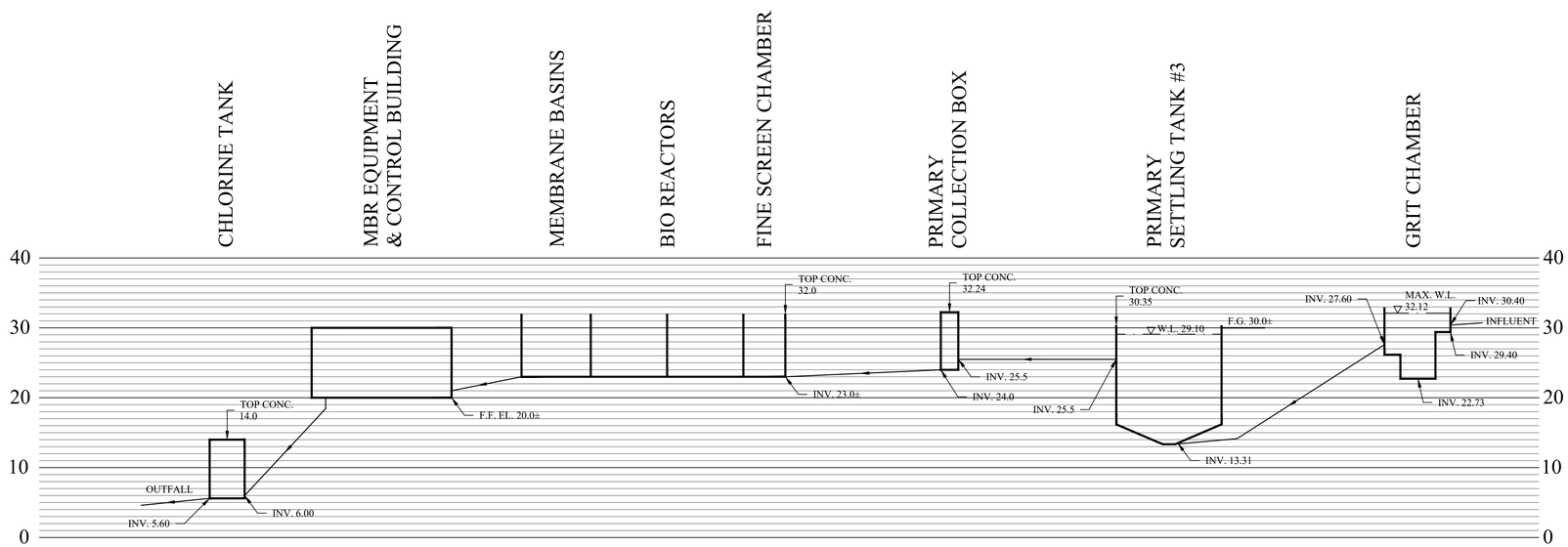

HYDRAULIC PROFILE

SCALES: HORIZ. NONE, VERT. 1"=10'

NOTE: PRIMARY COLLECTION BOX AND CHLORINATION TANK ARE EXISTING. ELEVATION BETWEEN THOSE STRUCTURES ARE AVAILABLE FOR MBR SYSTEM INSTALLATION.

MHE ENGINEERING

33 Airport Center Drive, Suite 202
New Windsor, NY 12553
(845) 567-3100

111 Wheatfield Drive, Suite 1
Milford, PA 18337
(570) 296-2765

SCHEMATIC DESIGN

Dig Safely. New York
Call811
before you dig

UNAUTHORIZED ADDITION OR ALTERATION OF THIS PLAN IS A VIOLATION OF SECTION 7209(2) OF THE NEW YORK STATE EDUCATION LAW.

ALL PRODUCTION & INTELLECTUAL PROPERTY RIGHT RESERVED ©

CAESARS LANE WWTP
EXPANSION PHASE

FOR TOWN OF NEW WINDSOR
555 UNION AVE.
NEW WINDSOR, NY 12553

HYDRAULIC PROFILE

REVISIONS

NO.	DESCRIPTION	DATE

ISSUED DATE:	13 MAY, 2022
DESIGN BY:	MJS
DRAWN BY:	HPBJr/TJA
CHECKED BY:	MJS
REVIEWED BY:	MJS, JZ

SHEET NO.

HP-101

PROJECT # 18-732 PHASE # 1-2

F:\2018\18-732 Caesar Lane WWTP Improvements\Drafting\HYDRAULIC PROFILE MBR.dwg, HP-101, 5/12/2022 8:09:58 AM

ADDENDUM NO. 1

FOR

Caesars Lane WWTP Expansion Phase
MBR Pre-Selection

Town of New Windsor
Orange County, New York

CLIENT:
Town of New Windsor
555 Union Avenue
New Windsor, NY 12553

PREPARED BY:
MHE Engineering, D.P.C.
33 Airport Center Dr., Suite 202
New Windsor, NY 12553

Addition to this Document is a
Violation of Section 7209(2)
of the New York State Education Law.

DATE: 29 JUNE 2022
JOB #: 18-732

THIS ADDENDUM CONSISTS OF SEVEN (7) PAGES

NEW YORK OFFICE
33 Airport Center Drive, Suite 202, New Windsor, NY 12553
845-567-3100 | F: 845-567-3232 | mheny@mhepc.com

PENNSYLVANIA OFFICE
111 Wheatfield Drive, Suite 1, Milford, PA 18337
570-296-2765 | F: 570-296-2767 | mhepa@mhepc.com

Caesars Lane WWTP Expansion Phase
MBR Pre-Selection

ADDENDUM NO. 1

Prospective Bidders are advised of the following revisions, additions and/or deletions to the contract documents.

RFI's

1. *Question: Please review notes and discussions with DEC to determine if the 19.6 gfd MDF flux cap applies to an N-1 scenario or with all MBR basins online.*

   Response: The membranes need to be able to pass peak hourly flow at the N-1 scenario. Flux requirements specified are most critical to sustained flows, in particular average and maximum monthly flows. Bidders can take exception to flux rates outside of the sustained flow that occur at shorter intervals such as maximum daily flow and peak hourly flow as long as Bidders are comfortable this will not require excessive cleaning after this condition and will still provide the required performance guarantee and warranty requirements. Any exception to the bid requirements must include proper documentation and basis of such exception including documentation of other facilities that operate outside the recommended flux rates at non-sustained flows. It should also be noted that any exception must meet DEC review requirements.

2. *Question: Valves and in-basin pricing are very volatile right now and determining the appropriate price to use given the length of time before the project will get built exposes the owner and/or the Bidder to significant risk. Placing these items in the contractor's scope of supply allows the owner to get the price point available at the time the project bids.*

   Response: MHE is willing to waive the requirement of the purchase of these valves and in-basin piping as part of the bidding process. As such, the Bidder shall disregard Section 1.1.B.3 from the scope of supply, however, a valve and piping list and/or drawings with specifications should still be submitted with proposal bid as this is an important aspect to understand with respect to the overall installation requirements and cost respective to each technology. The list will then be referenced in the General Contract scope of supply. For clarification, the elimination of valves and piping in the Bidder's scope of supply should be documented as an exception to the bid and reflected in Cost Item #4 in the MBR System Capital Cost Schedule in Section 2.01.G in the Bid Form.

3. *Question: Bidder has inquired about whether an automated CIP system is necessary as stated in the contract specifications, as compared to a manual CIP system.*

   Response: For Bid comparison, the Bidder shall include pricing for automated cleaning as noted in the contract documents, however the Bidder is welcome to include an alternative cleaning method with cost differentials for Owner consideration.

4. *Question: Bidder has inquired whether the 316L stainless steel requirement for materials within membrane tank is necessary, or whether an alternative material such as 304 stainless steel may be used.*

Response: If the Bidder feels that this material of construction is acceptable for their MBR tank, outside of the specified material of construction and will still provide the required performance guarantee and warranty requirements, the Bidder may submit with said material along with appropriate justification and documentation of alternate materials.

5. *Question: Filling the MBR tanks with cleaning chemicals should necessitate the installation of a tank liner to prevent the premature corrosion of the basin concrete. While the capital cost section asks whether a tank liner is needed there is no provision to include this added cost in the evaluation. It should be required to include tank liners in the cost evaluation, if applicable, and the cost of those liners should be defined on a $/sq ft basis.*

   Response: Bidders shall provide recommendations on protection of exposed concrete from membrane cleaning chemicals in their submission. This recommended protection will be factored into overall installation costs. Bidders shall provide recommendations to protect concrete to promote 30-year life span on the tank without excessive touch-up of any coatings or provide proof that other facilities are operating without adverse impact to concrete in this tank.

6. *Question: Bidder has inquired whether the phenol removal requirements stated in the contract specifications are valid, or whether these requirements should be removed.*

   Response: Phenols can be highly biodegradable and is anticipated that at levels experienced in the influent these will be treated to acceptable levels with activated sludge given the longer SRT and more robust microorganisms, in comparison, if present. However, MHE understands that there are many factors that could affect removal of these compounds and that pilot testing has not been performed. Therefore, Bidders will not be required to provide performance guarantee for phenol removal requirements stated in the contract specifications.

7. *Question: While backpulsing is mentioned in the discussion of controls and instrumentation, there does not appear to be any provision in the RFP to capture the costs related to the backpulse tank itself. Bidders should need to determine the appropriate size of the backpulse tank, include the cost for it in their scope, and include the space it requires in the membrane equipment building.*

   Response: It should be emphasized that the Bidder's proposed MBR system should be a COMPLETE system with all required support tankage necessary identified for operation and cleaning, including bulk chemical storage and utilities. Bidder will need to include the costs as additional concrete basin volume, if required.

8. *Question: The current specifications exclude MBR tank process volume from aerobic SRT considerations. It is believed to be reasonable to include the volume of the MBR tanks in the calculation for overall aerobic SRT purposes. If acceptable, the RFP specification language should be revised to allow for MBR tank volume inclusion.*

Response: For clarification, Bidders can consider volume of MBR tanks in the calculation for overall aerobic SRT purposes if the design will still provide the required performance guarantee and warranty requirements, as long as proper documentation and justification is included. Examples should be provided of other facilities that operate successfully including the MBR tank process volume within the SRT calculations. Resulting SRT including MBR Tank process volume must be clearly identified as required by the bid documents. It should be noted that the submitted design must meet DEC approval.

9. *Question: Please confirm bottom of tank elevation for bioreactors (re: Hydraulic Profile).*

   Response: The Hydraulic Profile provided in the contract documents is included for reference. Also for reference, approximate bedrock location is noted at two preliminary boring locations on Sheet SK-1. Bidders shall clearly note tank depth requirements for their respective systems for evaluation during the review process.

10. *Question: Consider replacing paragraph 5.01.6.2 in the Agreement in its entirety with the following: Contractor/Assignee shall pay Seller within 7 days of receipt of payment from the Project Owner under the construction contract.*

    Response: MHE will revise the Agreement to require the Contractor/Assignee to pay the Seller within 15 days of receipt of payment from the Project Owner under the construction contract.

11. *Question: Consider revising the Bid Form, Page 23,as follows:*
    a. *Reword "Owner and Location" to Facility Name and Location.*
    b. *Delete: "Peak Hydraulic Rated Capacity in MGD"*
    c. *Delete: "Biological Nitrogen Removal (yes or no)*
    d. *Delete: "Type of WAS Thickening Equipment, if any*
    e. *Delete: Type of Dewater Equipment, if any*
    f. *Delete: Reference Contact Name, Title, and Phone Number*
    g. *Delete: Installation Contractor Contact Name, Title, and Phone Number.*

    These edits will allow the MBR system supplier to provide their standard NAM reference list which may comprise several hundred installations. Alternatively, please consider reducing the number of installations to a minimum of 5 installations in each size category.

    Response: MHE finds the proposed changes acceptable and will revise the Bid Form accordingly.

12. *Question: MBR Spec 455000, Page 10: Please consider deleting: "under data demonstrating installations operating successfully at higher concentration is provided." This deletion will ensure that 8 g/L MLSS is used as the basis of design for the bioreactor and provide a common basis for system evaluation.*

Response: For clarification, Bidders may propose MLSS concentrations that are consistent with WEF Manual of Practice No. 36, 2011, so long as at least three years of operating data at the consistent and sustained higher concentrations greater than 8,000 mg/L are provided.

CLARIFICATIONS

1. The Owner has received requests for revisions to the General and Supplemental Conditions, and unless revised in this addendum, has decided to leave the standard contract conditions as provided in the bid documents.

2. The following sentence will be added at the end of paragraph in Section 2.01.E of the Bid Form:

   The Owner reserves the right to consider additional factors that may cause an increase or decrease in actual construction costs, such as more costly materials due to bidder specified requirements in materials, equipment, or construction method and system configuration.

ATTACHMENTS

1. Section 2.05 Price Escalation shall be added in Article 2 of the Agreement.

ALL BIDDERS MUST SUBMIT ACKNOWLEDGEMENT OF RECEIPT OF ALL ADDENDUMS WITH BID
(PAGE 6 - A1 ATTACHED HEREIN)

THERE WILL BE NO CHANGE IN THE TIME FOR THE RECEIPT OF BIDS.

Caesars Lane WWTP Expansion Phase
MBR Pre-Selection

ADDENDUM NO. 1

ACKNOWLEDGEMENT OF RECEIPT OF ALL ADDENDUMS LISTED BELOW:

ADDENDUM NO. 1 – 29 JUNE 2022 _____

SUBMIT THIS SHEET WITH YOUR BID

(End of Addendum No. 1)

MHE Engineering, D.P.C.
33 Airport Center Drive, Suite 202
New Windsor, NY 12553

2.05 Price Escalation

A. Certain markets providing essential materials and services to the Project may experience significant, industry-wide economic fluctuation during the performance of this agreement that may impact costs prior to fabrication. This section provides a fair allocation of the risk of such market conditions between the Owner and the Seller.

B. Thus, the contract price may be subject to adjustment based on market fluctuation prior to assignment of this contract to the General Construction Contract for the overall WWTP Expansion project. Any contract adjustment is subject to Owner acceptance.

C. The contract price will be adjusted based on the following:

   1. Seller's actual realized cost increases for materials and services (i.e., finished materials, raw materials, freight, fabrication, etc.) starting from the bid opening date of this contract and ending on the bid available date for the General Construction Contract of the overall WWTP Expansion project.

D. The Seller must submit with their bid documentation of present costs, internal or outsourced, to be considered for future price adjustment. Submitted documentation should include actual invoices that detail the Seller's present costs. At minimum this should include the following:

   1. Description of material, product, or service being considered
   2. Name of source vendor or supplier if applicable
   3. Date of invoice, quote, or cost estimate
   4. Lump sum cost or unit price
   5. Make and model of product if applicable

E. Within three (3) weeks after the Bid Available Date for the General Construction Contract, the Seller must submit, in writing, to the Owner a request for contract adjustment. The Seller must clearly state their proposed net adjustment to the contract price while providing supporting documentation showing the proposed adjustment reasonably reflects the change in costs experienced by the Seller. The Seller shall provide updated pricing for cost items submitted during their bid.

F. After award of this contract, the Seller may propose an alternative method of price escalation for consideration by the Owner, however, the alternative method must be agreed upon in writing by the Seller and the Owner prior to the signing of the Agreement, and will then be memorialized via Change Order.

G. The total adjusted contract price will be included in the General Construction Contract as applicable.

Copyright© 2019 National Society of Professional Engineers, American Council of Engineering Companies, and American Society of Civil Engineers. All rights reserved.

ADDENDUM NO. 2

FOR

Caesars Lane WWTP Expansion Phase
MBR Pre-Selection

Town of New Windsor
Orange County, New York

CLIENT:
Town of New Windsor
555 Union Avenue
New Windsor, NY 12553

PREPARED BY:
MHE Engineering, D.P.C.
33 Airport Center Dr., Suite 202
New Windsor, NY 12553

Addition to this Document is a
Violation of Section 7209(2)
of the New York State Education Law.

DATE: 8 JULY 2022
JOB #: 18-732

THIS ADDENDUM CONSISTS OF THREE (3) PAGES

NEW YORK OFFICE
33 Airport Center Drive, Suite 202, New Windsor, NY 12553
845-567-3100 | F: 845-567-3232 | mheny@mhepc.com

PENNSYLVANIA OFFICE
111 Wheatfield Drive, Suite 1, Milford, PA 18337
570-296-2765 | F: 570-296-2767 | mhepa@mhepc.com

Caesars Lane WWTP Expansion Phase
MBR Pre-Selection

ADDENDUM NO. 2

Prospective Bidders are advised of the following revisions, additions and/or deletions to the contract documents.

CLARIFICATIONS

1. There was a misprint in the RFI #1 Response in Addendum #1. The first sentence of that response should read: *The membranes need to be able to pass Maximum Day Flow at the N-1 scenario.*

2. To clarify further, the proposed MBR system must treat the Maximum Day Flow (MDF) of 11.0 MGD with one train out of service (N-1 scenario) for up to 24 hours. The proposed system must also be able to treat the Peak Hourly Flow of 16.5 MGD for at least 2 hours with all trains in service.

TIME EXTENSION

1. A new bid opening date has been scheduled for Tuesday, July 26th 2022 at 2:00PM.

ALL BIDDERS MUST SUBMIT ACKNOWLEDGEMENT OF RECEIPT OF ALL ADDENDUMS WITH BID
(PAGE 3 – A2 ATTACHED HEREIN)

THE TIME FOR THE RECEIPT OF BIDS HAS BEEN EXTENDED TO TUESDAY, JULY 26TH, 2022.

Caesars Lane WWTP Expansion Phase
MBR Pre-Selection

ADDENDUM NO. 2

ACKNOWLEDGEMENT OF RECEIPT OF ALL ADDENDUMS LISTED BELOW:

ADDENDUM NO. 1 – 29 JUNE 2022 _____

ADDENDUM NO. 2 – 8 JULY 2022 _____

SUBMIT THIS SHEET WITH YOUR BID

(End of Addendum No. 2)

MHE Engineering, D.P.C.
33 Airport Center Drive, Suite 202
New Windsor, NY 12553

PERFORMANCE BOND FOR PROCUREMENT CONTRACT

Seller Name: Address *(principal place of business)*:	**Surety** Name: Address *(principal place of business)*:
Buyer Name: **Town of New Windsor** Mailing address *(principal place of business)*: **555 Union Avenue** **New Windsor, NY 1553**	**Procurement Contract** Description *(name and location)*: **Caesars Lane Wastewater Treatment Facility MBR System Pre-Selection, 145 Caesars Lane, New Windsor, NY 12553** Procurement Contract Price: **$3,826,000.00** Effective Date of Procurement Contract:

Bond

Bond Amount:

Date of Bond:

(Date of Bond cannot be earlier than Effective Date of Procurement Contract)

Modifications to this Bond form:

☐ None ☐ See Paragraph 15

Surety and Seller, intending to be legally bound hereby, subject to the terms set forth in this Performance Bond, do each cause this Performance Bond to be duly executed by an authorized officer, agent, or representative.

Seller as Principal	Surety
_____ *(Full formal name of Seller)*	_____ *(Full formal name of Surety) (corporate seal)*
By: _____ *(Signature)*	By: _____ *(Signature)(Attach Power of Attorney)*
Name: _____ *(Printed or typed)*	Name: _____ *(Printed or typed)*
Title: _____	Title: _____
Attest: _____ *(Signature)*	Attest: _____ *(Signature)*
Name: _____ *(Printed or typed)*	Name: _____ *(Printed or typed)*
Title: _____	Title: _____

Notes: (1) Provide supplemental execution by any additional parties, such as joint venturers. (2) Any singular reference to Seller, Surety, Buyer, or other party is considered plural where applicable.

Copyright© 2019 National Society of Professional Engineers, American Council of Engineering Companies, and American Society of Civil Engineers. All rights reserved.

1. The Seller and Surety, jointly and severally, bind themselves, their heirs, executors, administrators, successors, and assigns to the Buyer for the performance of the Procurement Contract, which is incorporated herein by reference.

2. If the Seller performs the Procurement Contract, the Surety and the Seller shall have no obligation under this Bond, except when applicable to participate in a conference as provided in Paragraph 3.

3. If there is no Buyer Default under the Procurement Contract, the Surety's obligation under this Bond will arise after:

    3.1. The Buyer first provides notice to the Seller and the Surety that the Buyer is considering declaring a Seller Default. Such notice may indicate whether the Buyer is requesting a conference among the Buyer, Seller, and Surety to discuss the Seller's performance. If the Buyer does not request a conference, the Surety may, within five (5) business days after receipt of the Buyer's notice, request such a conference. If the Surety timely requests a conference, the Buyer shall attend. Unless the Buyer agrees otherwise, any conference requested under this Paragraph 3.1 will be held within ten (10) business days of the Surety's receipt of the Buyer's notice. If the Buyer, the Seller, and the Surety agree, the Seller shall be allowed a reasonable time to perform the Procurement Contract, but such an agreement does not waive the Buyer's right, if any, subsequently to declare a Seller Default;

    3.2. The Buyer declares a Seller Default, terminates the Procurement Contract, and notifies the Surety; and

    3.3. The Buyer has agreed to pay the Balance of the Procurement Contract Price in accordance with the terms of the Procurement Contract to the Surety or to a seller selected to perform the Procurement Contract.

4. Failure on the part of the Buyer to comply with the notice requirement in Paragraph 3.1 does not constitute a failure to comply with a condition precedent to the Surety's obligations, or release the Surety from its obligations, except to the extent the Surety demonstrates actual prejudice.

5. When the Buyer has satisfied the conditions of Paragraph 3, the Surety shall promptly and at the Surety's expense take one of the following actions:

    5.1. Arrange for the Seller, with the consent of the Buyer, to perform and complete the Procurement Contract;

    5.2. Undertake to perform and complete the Procurement Contract itself, through its agents or independent contractors;

    5.3. Obtain bids or negotiated proposals from qualified sellers acceptable to the Buyer for a contract for performance and completion of the Procurement Contract, arrange for a contract to be prepared for execution by the Buyer and a seller selected with the Buyer's concurrence, to be secured with performance and payment bonds executed by a qualified surety equivalent to the bonds issued on the Procurement Contract, and pay to the Buyer the amount of damages as described in Paragraph 7 in excess of the Balance of the Procurement Contract Price incurred by the Buyer as a result of the Seller Default; or

    5.4. Waive its right to perform and complete, arrange for completion, or obtain a new seller, and with reasonable promptness under the circumstances:

        5.4.1. After investigation, determine the amount for which Surety may be liable to the Buyer and, as soon as practicable after the amount is determined, make payment to the Buyer; or

Copyright© 2019 National Society of Professional Engineers, American Council of Engineering Companies, and American Society of Civil Engineers. All rights reserved.

5.4.2. Deny liability in whole or in part and notify the Buyer, citing the reasons for denial.

6. If the Surety does not proceed as provided in Paragraph 5 with reasonable promptness, the Surety shall be deemed to be in default on this Bond seven (7) days after receipt of an additional written notice from the Buyer to the Surety demanding that the Surety perform its obligations under this Bond, and the Buyer shall be entitled to enforce any remedy available to the Buyer. If the Surety proceeds as provided in Paragraph 5.4, and the Buyer refuses the payment, or the Surety has denied liability, in whole or in part, without further notice, the Buyer shall be entitled to enforce any remedy available to the Buyer.

7. If the Surety elects to act under Paragraph 5.1, 5.2, or 5.3, then the responsibilities of the Surety to the Buyer will not be greater than those of the Seller under the Procurement Contract, and the responsibilities of the Buyer to the Surety will not be greater than those of the Buyer under the Procurement Contract. Subject to the commitment by the Buyer to pay the Balance of the Procurement Contract Price, the Surety is obligated, without duplication for:

   7.1. the responsibilities of the Seller for correction of defective or non-conforming Goods and Special Services, and completion of the Procurement Contract;

   7.2. additional legal, design professional, and delay costs resulting from the Seller's Default, and resulting from the actions or failure to act of the Surety under Paragraph 5; and

   7.3. liquidated damages, or if no liquidated damages are specified in the Procurement Contract, actual damages caused by delayed performance or non-performance of the Seller.

8. If the Surety elects to act under Paragraph 5.1, 5.3, or 5.4, the Surety's liability is limited to the amount of this Bond.

9. The Surety shall not be liable to the Buyer or others for obligations of the Seller that are unrelated to the Procurement Contract, and the Balance of the Procurement Contract Price will not be reduced or set off on account of any such unrelated obligations. No right of action will accrue on this Bond to any person or entity other than the Buyer or its heirs, executors, administrators, successors, and assigns.

10. The Surety hereby waives notice of any change, including changes of time, to the Procurement Contract or to related subcontracts, purchase orders, and other obligations.

11. Any proceeding, legal or equitable, under this Bond must be instituted in any court of competent jurisdiction where the Point of Destination is located and must be instituted within two years after a declaration of Seller Default, or within two years after the Seller ceased working, or within two years after the Surety refuses or fails to perform its obligations under this Bond, whichever occurs first. If the provisions of this Paragraph are void or prohibited by law, the minimum periods of limitations available to sureties as a defense in the jurisdiction of the suit will be applicable.

12. Notice to the Surety, the Buyer, or the Seller must be mailed or delivered to the address shown on the page on which their signature appears.

13. When this Bond has been furnished to comply with a statutory or other legal requirement in the location of the Point of Destination, any provision in this Bond conflicting with said statutory or legal requirement will be deemed deleted herefrom and provisions conforming to such statutory or other legal requirement will be deemed incorporated herein. When so furnished, the intent is that this Bond will be construed as a statutory bond and not as a common law bond.

14. Definitions

   14.1. *Balance of the Procurement Contract Price*—The total amount payable by the Buyer to the Seller under the Procurement Contract after all proper adjustments have been made including

Copyright© 2019 National Society of Professional Engineers, American Council of Engineering Companies, and American Society of Civil Engineers. All rights reserved.

allowance for the Seller for any amounts received or to be received by the Buyer in settlement of insurance or other claims for damages to which the Seller is entitled, reduced by all valid and proper payments made to or on behalf of the Seller under the Procurement Contract.

14.2. *Buyer Default*—Failure of the Buyer, which has not been remedied or waived, to pay the Seller as required under the Procurement Contract or to perform and complete or comply with the other material terms of the Procurement Contract.

14.3. *Goods and Special Services*—The full scope of materials, equipment, other items, and services to be furnished by Seller, as defined in the Procurement Contract.

14.4. *Point of Destination*—The location where delivery of the Goods shall be made, as stated in the Procurement Contract.

14.5. *Procurement Contract*—The contractual agreement between the Buyer and Seller identified on the cover page, including all Procurement Contract Documents and changes made to the Procurement Contract.

14.6. *Seller Default*—Failure of the Seller, which has not been remedied or waived, to perform or otherwise to comply with a material term of the Procurement Contract.

14.7. *Procurement Contract Documents*—All the documents that comprise the contractual agreement between the Buyer and Seller.

15. Modifications to this Bond are as follows: **None.**

Copyright© 2019 National Society of Professional Engineers, American Council of Engineering Companies, and American Society of Civil Engineers. All rights reserved.

PAYMENT BOND FOR PROCUREMENT CONTRACT

Seller	**Surety**
Name:	Name:
Address *(principal place of business)*:	Address *(principal place of business)*:
Buyer	**Procurement Contract**
Name: **Town of New Windsor**	Description *(name and location)*: **Caesars Lane Wastewater Treatment Facility MBR System Pre-Selection, 145 Caesars Lane, New Windsor, NY 12553**
Mailing address *(principal place of business)*: **555 Union Avenue New Windsor, NY 12553**	Procurement Contract Price: **$3,826,000.00**
	Effective Date of Procurement Contract:

Bond

Bond Amount:

Date of Bond:

(Date of Bond cannot be earlier than Effective Date of Procurement Contract)

Modifications to this Bond form:

☐ None ☐ See Paragraph 17

Surety and Seller, intending to be legally bound hereby, subject to the terms set forth in this Payment Bond, do each cause this Payment Bond to be duly executed by an authorized officer, agent, or representative.

Seller as Principal	Surety
_____	_____
(Full formal name of Seller)	*(Full formal name of Surety) (corporate seal)*
By: _____	By: _____
(Signature)	*(Signature)(Attach Power of Attorney)*
Name: _____	Name: _____
(Printed or typed)	*(Printed or typed)*
Title: _____	Title: _____
Attest: _____	Attest: _____
(Signature)	*(Signature)*
Name: _____	Name: _____
(Printed or typed)	*(Printed or typed)*
Title: _____	Title: _____

Notes: (1) Provide supplemental execution by any additional parties, such as joint venturers. (2) Any singular reference to Seller, Surety, Buyer, or other party is considered plural where applicable.

Copyright© 2019 National Society of Professional Engineers, American Council of Engineering Companies, and American Society of Civil Engineers. All rights reserved.

1. The Seller and Surety, jointly and severally, bind themselves, their heirs, executors, administrators, successors, and assigns to the Buyer to pay for labor, materials, and equipment furnished for use in the performance of the Procurement Contract, which is incorporated herein by reference, subject to the following terms.
2. If the Seller promptly makes payment of all sums due to Claimants, and defends, indemnifies, and holds harmless the Buyer from claims, demands, liens, or suits by any person or entity seeking payment for labor, materials, or equipment furnished for use in the performance of the Procurement Contract, then the Surety and the Seller shall have no obligation under this Bond.
3. If there is no Buyer Default under the Procurement Contract, the Surety's obligation to the Buyer under this Bond will arise after the Buyer has promptly notified the Seller and the Surety (at the address described in Paragraph 13) of claims, demands, liens, or suits against the Buyer or the Buyer's property by any person or entity seeking payment for labor, materials, or equipment furnished for use in the performance of the Procurement Contract, and tendered defense of such claims, demands, liens, or suits to the Seller and the Surety.
4. When the Buyer has satisfied the conditions in Paragraph 3, the Surety shall promptly and at the Surety's expense defend, indemnify, and hold harmless the Buyer against a duly tendered claim, demand, lien, or suit.
5. The Surety's obligations to a Claimant under this Bond will arise after the following:
    5.1. Claimants who do not have a direct contract with the Seller
        5.1.1. have furnished a written notice of non-payment to the Seller, stating with substantial accuracy the amount claimed and the name of the party to whom the materials were, or equipment was, furnished or supplied or for whom the labor was done or performed, within ninety (90) days after having last performed labor or last furnished materials or equipment included in the Claim; and
        5.1.2. have sent a Claim to the Surety (at the address described in Paragraph 13).
    5.2. Claimants who are employed by or have a direct contract with the Seller have sent a Claim to the Surety (at the address described in Paragraph 13).
6. If a notice of non-payment required by Paragraph 5.1.1 is given by the Buyer to the Seller, that is sufficient to satisfy a Claimant's obligation to furnish a written notice of non-payment under Paragraph 5.1.1.
7. When a Claimant has satisfied the conditions of Paragraph 5.1 or 5.2, whichever is applicable, the Surety shall promptly and at the Surety's expense take the following actions:
    7.1. Send an answer to the Claimant, with a copy to the Buyer, within sixty (60) days after receipt of the Claim, stating the amounts that are undisputed and the basis for challenging any amounts that are disputed; and
    7.2. Pay or arrange for payment of any undisputed amounts.
    7.3. The Surety's failure to discharge its obligations under Paragraph 7.1 or 7.2 will not be deemed to constitute a waiver of defenses the Surety or Seller may have or acquire as to a Claim, except as to undisputed amounts for which the Surety and Claimant have reached agreement. If, however, the Surety fails to discharge its obligations under Paragraph 7.1 or 7.2, the Surety shall indemnify the Claimant for the reasonable attorney's fees the Claimant incurs thereafter to recover any sums found to be due and owing to the Claimant.

Copyright© 2019 National Society of Professional Engineers, American Council of Engineering Companies, and American Society of Civil Engineers. All rights reserved.

8. The Surety's total obligation will not exceed the amount of this Bond, plus the amount of reasonable attorney's fees provided under Paragraph 7.3, and the amount of this Bond will be credited for any payments made in good faith by the Surety.

9. Amounts owed by the Buyer to the Seller under the Procurement Contract will be used for the performance of the Procurement Contract and to satisfy claims, if any, under any procurement performance bond. By the Seller furnishing and the Buyer accepting this Bond, they agree that all funds earned by the Seller in the performance of the Procurement Contract are dedicated to satisfying obligations of the Seller and Surety under this Bond, subject to the Buyer's priority to use the funds for the completion of the Goods and Special Services.

10. The Surety shall not be liable to the Buyer, Claimants, or others for obligations of the Seller that are unrelated to the Procurement Contract. The Buyer shall not be liable for the payment of any costs or expenses of any Claimant under this Bond, and shall have under this Bond no obligation to make payments to or give notice on behalf of Claimants, or otherwise have any obligations to Claimants under this Bond.

11. The Surety hereby waives notice of any change, including changes of time, to the Procurement Contract or to related subcontracts, purchase orders, and other obligations.

12. No suit or action will be commenced by a Claimant under this Bond other than in a court of competent jurisdiction in the state in which the Point of Destination is located or after the expiration of one year from the date (1) on which the Claimant sent a Claim to the Surety pursuant to Paragraph 5.1.2 or 5.2, or (2) on which the last labor or service was performed by anyone or the last materials or equipment were furnished by anyone under the Procurement Contract, whichever of (1) or (2) first occurs. If the provisions of this paragraph are void or prohibited by law, the minimum period of limitation available to sureties as a defense in the jurisdiction of the suit will be applicable.

13. Notice and Claims to the Surety, the Buyer, or the Seller must be mailed or delivered to the address shown on the page on which their signature appears. Actual receipt of notice or Claims, however accomplished, will be sufficient compliance as of the date received.

14. When this Bond has been furnished to comply with a statutory or other legal requirement where the Point of Destination is located, any provision in this Bond conflicting with said statutory or legal requirement will be deemed deleted herefrom and provisions conforming to such statutory or other legal requirement will be deemed incorporated herein. When so furnished, the intent is that this Bond will be construed as a statutory bond and not as a common law bond.

15. Upon requests by any person or entity appearing to be a potential beneficiary of this Bond, the Seller and Buyer shall promptly furnish a copy of this Bond or shall permit a copy to be made.

16. Definitions

    16.1. *Buyer Default*—Failure of the Buyer, which has not been remedied or waived, to pay the Seller as required under the Procurement Contract or to perform and complete or comply with the other material terms of the Procurement Contract.

    16.2. *Claim*—A written statement by the Claimant including at a minimum:

        16.2.1. The name of the Claimant;

        16.2.2. The name of the person for whom the labor was done, or materials or equipment furnished;

        16.2.3. A copy of the agreement or purchase order pursuant to which labor, materials, or equipment was furnished for use in the performance of the Procurement Contract;

Copyright© 2019 National Society of Professional Engineers, American Council of Engineering Companies, and American Society of Civil Engineers. All rights reserved.

16.2.4. A brief description of the labor, materials, or equipment furnished;

16.2.5. The date on which the Claimant last performed labor or last furnished materials or equipment for use in the performance of the Procurement Contract;

16.2.6. The total amount earned by the Claimant for labor, materials, or equipment furnished as of the date of the Claim;

16.2.7. The total amount of previous payments received by the Claimant; and

16.2.8. The total amount due and unpaid to the Claimant for labor, materials, or equipment furnished as of the date of the Claim.

16.3. *Claimant*—An individual or entity having a direct contract with the Seller or with a subcontractor of the Seller to furnish labor, materials, or equipment for use in the performance of the Procurement Contract. The term Claimant also includes any individual or entity that has rightfully asserted a claim under an applicable mechanic's lien or similar statute against the real property upon which the Point of Destination is located or where the Goods and Special Services are to be installed or furnished. The intent of this Bond is to include without limitation in the terms of "labor, materials, or equipment" that part of the water, gas, power, light, heat, oil, gasoline, telephone service, or rental equipment used in the Procurement Contract, architectural and engineering services required for performance of the work of the Seller and the Seller's subcontractors, and all other items for which a mechanic's lien may be asserted in the jurisdiction where the labor, materials, or equipment were furnished.

16.4. *Goods and Special Services*—The full scope of materials, equipment, other items, and services to be furnished by Seller, as defined in the Procurement Contract.

16.5. *Point of Destination*—The location where delivery of the Goods shall be made, as stated in the Procurement Contract.

16.6. *Procurement Contract*—The contractual agreement between the Buyer and Seller identified on the cover page, including all Procurement Contract Documents and all changes made to the Procurement Contract.

16.7. *Procurement Contract Documents*—All the documents that comprise the contractual agreement between the Buyer and Seller.

17. Modifications to this Bond are as follows: **None.**

Copyright© 2019 National Society of Professional Engineers, American Council of Engineering Companies, and American Society of Civil Engineers. All rights reserved.

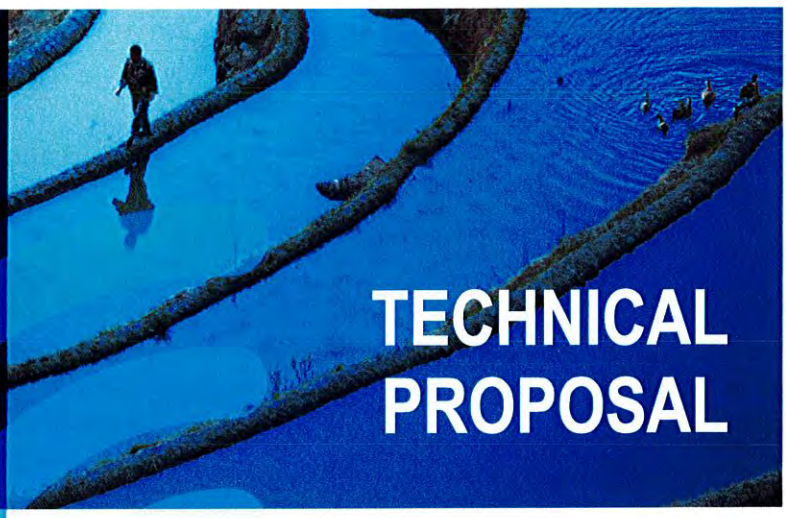

TECHNICAL PROPOSAL

Caesars Lane Wastewater Treatment Facility (WTF) MBR System Pre-Selection

Job No. 18-732

SUEZ WTS Systems USA Inc.
3239 Dundas Street West
Oakville, Ontario L6M 4B2
T: +1(484) 460-1739
www.suezwatertechnologies.com

SUBMITTED TO: **TOWN OF NEW WINDSOR**
555 UNION AVENUE
NEW WINDSOR, NY 12553

SUBMITTED BY: **SUEZ WTS SYSTEMS USA INC.**
PROPOSAL NO.: **360077**
CONTACT PERSON: **GRAHAM BEST**
REGIONAL MANAGER

DATE: **JULY 20. 2022**

Table of Contents

Executive Summary

1 Manufacturer and Supplier Information

1.a SUEZ – A Leading Membrane Manufacturer and Equipment Supplier

1.b Company History

1.c UF/MBR Operation

1.d Membrane Manufacturing

2 Qualifications

2.a Quality Assurance and Quality Control

2.b Bonding Capacity Letter

2.c MBR Experience and Installation Lists

- 2.c.1 Membrane Life
- 2.c.2 SUEZ MBR Installation in USA and Canada
- 2.c.3 SUEZ MBR Global Installation (Excluding USA and Canada)
- 2.c.4 Large MBR Experience in the World

2.d Reference Installations

2.e Project Organization Chart

2.f Number and Location of Staff, Representatives, And Offices

- 2.f.1 Local Presence
- 2.f.2 Local Contacts
- 2.f.3 Local Representation

2.g Compliance Statement

2.h Acknowledgement of American Iron and Steel (AIS) Requirements

3 Design Submittals

3.a Scope of Supply

- 3.a.1 Basis of Design
  - 3.a.1.1 Influent Flow Data
  - 3.a.1.2 Influent Quality
  - 3.a.1.3 Effluent Quality
  - 3.a.1.4 Biological System Design
  - 3.a.1.5 Ultrafiltration System Design

- 3.a.1.6 Siphon Design
- 3.a.1.7 Process Building
- 3.a.2 Scope of Supply by SUEZ
  - 3.a.2.1 SUEZ Engineering Services
- 3.a.3 Special Tools and Spare Parts
- 3.a.4 Scope of Supply by Others

3.b SUEZ Membrane Module and Cassette

3.c MBR System General Layout, Membrane Tank General Arrangement (GA), MBR Equipment Room GA, and Bioreactor GA

3.d Process Flow Diagram (PFD)

3.e Process and Instrumentation Diagram (P&ID)

3.f Typical MBR HMI Screen Layouts and Content

3.g BioWin Model

3.h Design Calculations Report

- 3.h.1 Membrane Surface Area, Membrane Bioreactor Tank Size
- 3.h.2 Flow, Flux, And Transmembrane Pressure (TMP) per Unit and Number of Units at Design Conditions Including ADF, PHF, MDF, MMAF, MLSS, and Water Temperature
- 3.h.3 Membrane Scour Air Flow and Pressure Requirements for Normal Operation, Backwashing, and Cleaning
- 3.h.4 Description of the System Design Flexibility and Ability to Consistently Meet Permit and Redundancy Requirements over Range of Design Influent Flow and Load Conditions

3.i Membrane Operation and Cleaning

- 3.i.1 Membrane Operation
- 3.i.2 Membrane Cleaning

3.j Fine Screen Requirements

3.k Preliminary Schedule

- 3.k.1 Design Submittals
- 3.k.2 PLC Programming and HMI Screens
- 3.k.3 Equipment Shipment

4 Training Service

5 Technical Service and Support

5.a Design Service

5.b Construction, Commissioning, and Training Service

5.c Aftermarket Service

6 Bidding Documents – Bid Form, Bid Worksheets, and Bid Bond

7 Membrane Maintenance Documents

8 Warranties

8.a Mechanical Warranty

8.b Membrane Warranty

8.b.1 Warranty Provisions

8.b.2 Membrane Performance

8.c Performance Warranty

8.c.1 Biological Treatment System

8.c.2 Operations & Maintenance Costs

8.c.3 Performance Test

8.d Seller's Warranty – ZeeWeed Membrane Modules

9 Commercial Notes

9.a System Price

9.b Price Validity and Price Escalation

9.c Taxes

9.d Order Confirmation Center

9.e Delivery

9.f Terms and Conditions

10 Value Engineering

Appendix A – Major Equipment Cut Sheets/Brochures

Appendix B – SUEZ Quality Management System Manual and ISO Certificates

Appendix C – Bonding Capacity Letter for SUEZ WTS Systems USA

Appendix D – Hydraulic Profile Markup

Appendix E – Supplementary Conditions of the Procurement Contract

SUEZ Water Technologies & Solutions
Confidential and Proprietary Information

The enclosed materials are considered proprietary property of SUEZ Water Technologies & Solutions (SUEZ). No assignments either implied or expressed, of intellectual property rights, data, know-how, trade secrets or licenses of use thereof are given. All information is provided exclusively to the addressee and agents of the addressee for the purposes of evaluation and is not to be reproduced or divulged to other parties, nor used for manufacture or other means, without the express written consent of SUEZ. The acceptance of this document will be construed as an acceptance of the foregoing.

*The following are trademarks of SUEZ Water Technologies & Solutions and may be registered in one or more countries: InSight, LEAPmbr, ZeeWeed, and ZENON.

Executive Summary

1 Introduction

SUEZ is pleased to submit our ZeeWeed MBR System proposal for the Caesars Lane Wastewater Treatment Facility for consideration by the Town of New Windsor. Our proposal is fully compliant with the Pre-Selection Document and the issued Addenda prepared by MHE Engineering. Key aspects of the proposal and the SUEZ offer are highlighted below:

2 Why Select SUEZ?

As the pioneer and world leader in MBR technology, SUEZ is committed to this important project and will deliver a world class MBR. SUEZ's commitment extends beyond the supply of our proven, reliable MBR equipment. It includes unmatched knowledge, support, and the ability to maintain a long-term relationship that will continue to meet the Town's needs after commissioning of the facility.

By selecting SUEZ, you will be purchasing a membrane treatment system of the highest quality, lowest evaluated life-cycle costs and longest proven membrane life while working with an experienced, trusted partner.

Experienced MBR Company with Strong Financials

SUEZ's offer combines ZENON patented technologies and 30 years of MBR experience with SUEZ's corporate leadership, financial depth and focus on water and wastewater treatment. MBR membranes and equipment are a core technology offering of SUEZ. We not only design the systems, but also manufacture the ZeeWeed membrane. SUEZ has the largest hollow fiber membrane manufacturing capacity in the world.

Project Approach to Meet the Town's Objectives

SUEZ approaches the design of an MBR facility as a collaborative effort and believes that partnering with the Town and MHE is essential to ensure that the expectations of the team are exceeded.

The SUEZ project execution team available for this project has experience with similar sized MBR plants, extensive MBR process knowledge, and includes a senior project manager to coordinate and deliver the system. Detailed project support from the design phase through to the commissioning phase will ensure deliverables and budget are constantly achieved.

Proven Product

Long-term membrane performance is provided by the ZeeWeed 500 membrane: the industry's most durable and longest-lasting membrane. The reinforced ZeeWeed 500 membrane is designed for maximum durability and has demonstrated over 20 years of life in a municipal installation.

Membrane life is critical to the success of an MBR facility as noted in the following graphic:

Many performance challenges with the flat-plate technology over the last 10-years at the Leoni WWTP and other WWTPs in Michigan and Ohio. Membrane life expectancy of 3-7 years.

FLEIS&VANDENBRINK

Excerpt: Table 2. Leoni WWTP Membrane Comparison Table, Kubota SP600, Report to Leoni Township prepared by Robert W. Wilcox, P.E., Fleis & Vandenbrink, March 19, 2020. Tel: 616.977.1000

In addition to the financial impact of membrane replacement, unplanned, premature membrane replacement can result in treatment disruption and potentially untreated discharge or overflow,

Conversely, SUEZ has provided five membrane facility references (> 1 MGD, ADF) with **membrane life of 14-15 years prior to the first membrane train replacement**. The Town of New Windsor can reasonably expect an average membrane life greater than 15 years for the proposed membrane system.

Significant MBR Experience in the USA

SUEZ's 370 municipal MBR installations and years of operating experience in the United States should provide security and peace of mind to the Town. Our large MBR plant experience in the USA includes 23 operating MBR facilities greater than 5 MGD and 14 greater than or equal to 10.0 MGD. To demonstrate our experience, SUEZ has selected 5 specification compliant reference sites to demonstrate the design criteria for the project including design flux, MLSS, chemical cleaning regime and membrane life.

Superior Services, Maintenance Program & Local Support

Long term customer service and satisfaction is paramount to SUEZ. As such, we have provided a specification compliant package of services including Insight Pro monitoring and process consulting service for 2 years, 24/7 technical phone support for 10 years, and the opportunity to participate annually in SUEZ's ZeeWeed MBR Users Group.

The Town will also be supported by Sherwood-Logan & Associates, SUEZ's local representative. Sherwood-Logan can assist with client communication, warranty repair work, as well as requests for components and parts.

SUEZ also provides a regional lifecycle manager to provide product support for the lifecycle of the plant. They will act as an accessible point of contact in providing technical support, information on product upgrades, spare parts, scheduled service visits and support plant audits.

3 Conservative Design

Responsible Flux Selection

A conservative design approach is an ingrained philosophy at SUEZ. **As such, we have used fully compliant MDF, MDF (N-1) and PHF fluxes for the SUEZ LEAPmbr.** These conservative, demonstrated fluxes are based on years of design experience treating municipal wastewater throughout North America and will ensure that the facility operates reliably. The selected fluxes allow for operation of the system at ADF with one train out of operation at 10°C on a continuous basis.

Addendum No. 1 allows the seller to propose more aggressive fluxes based on demonstrated experience. However, SUEZ believes the specified maximum fluxes for peak day and peak hour flow are appropriate and consistent with best engineering practice for large MBR facilities and should be retained.

Selection of conservative fluxes is particularly important in facilities treating cold water with limited equalization or high influent flow peaking factors such as Caesars Lane. Peak flows can frequently destabilize upstream clarification and biological treatment and negatively affect membrane filtration.

For this important selection, SUEZ recommends the Town of New Windsor limit peak hour fluxes to 22.2 gfd as specified in the Pre-selection Document.

Practical, Energy Efficient Mixed Liquor Concentrations (MLSS)

SUEZ has proposed a maximum bioreactor MLSS of 8.5 g/L. As aeration α value decreases exponentially and process aeration costs increase with increased MLSS concentrations, SUEZ has proposed an ideal balance between bioreactor capital construction costs and process aeration costs.



SUEZ has also proposed a MLSS concentration that is consistent with guidance provided in WEF Manual of Practice 36 and SUEZ design guidelines at the proposed fluxes. While SUEZ can design for higher MLSS concentrations, i.e., for membrane thickening applications to 4 g/L, SUEZ recognizes that **the combination of high fluxes and high solids concentrations can result in solids dewatering**, unnecessary cleaning, and premature membrane failure.

There are numerous, reported examples of aggressive flux and MLSS selections resulting in solids dewatering within plate packs and membrane modules. In some cases, these have resulted in either membrane replacement or a membrane supplier change. Two SUEZ reference facilities in Michigan are Kubota flat plate membrane system replacements.

SUEZ recommends that any proposed membrane system limit the allowable MLSS concentration to <8.5 g/L in the bioreactor.

4 Siphon

SUEZ has proposed a siphon design as the base design for our proposal. If the Town would prefer not to use siphon, we have also provided information and partial bid forms for a pumped alternative, and information related to a partial siphon alternative. These options are discussed in Section 10 – Value Engineering.

SUEZ believes use of a siphon configuration will offer important capital and operational cost savings for the project and have provided two detailed relevant references operating in siphon mode: Brush Creek WRF (7.2 MGD) and Linwood WRF (4.6 MGD).

5 Absolute Guarantees and Warranties by SUEZ

In addition to the specified mechanical and process warranties, SUEZ is offering a **15-year pro-rated membrane warranty (initial 5 year full membrane warranty)** for this project. Our proven membrane and extended membrane warranty will provide the Town with the longest possible and most cost effective membrane life.

6 Beating Murphy's Law

Murphy's Law is typically stated as "Anything that can go wrong will go wrong". Beating Murphy's Law requires planning and implementing "hard won" experience in product development. When designing, delivering, and operating MBR facilities, SUEZ has learned the importance of having flexible and comprehensive operational tools in any MBR system. These tools allow you to plan for, respond to, and avoid undesirable operational outcomes. The proposed ZeeWeed system includes standard process tools that **enhance** membrane operation: backwashes, tank drains, maintenance cleans and chemical recovery cleaning.



7 Summary

The Caesars Lane WWTP is an important project that will benefit from a technology partner with the commitment, resources, and project team to design an MBR of this size and complexity.

The combination of SUEZ's demonstrated MBR operating experience, mature product design, extensive service and support capability, and proven membrane makes SUEZ the best partner with the lowest risk for the Town.

SUEZ is 100% committed to the successful delivery and implementation of the Caesars Lane WWTP MBR. We look forward to your favorable consideration of our proposal

Regards,

Graham Best,
Regional Sales Manager
SUEZ Water Technologies & Solutions

1 Manufacturer and Supplier Information

1.a SUEZ – A Leading Membrane Manufacturer and Equipment Supplier

SUEZ Offers A Simple, Single Point of Accountability.

SUEZ is 100% committed to the development of hollow fiber membrane-based technologies and their integration with wastewater and water treatment processes. The membrane polymers, modules, cassettes, and systems are entirely designed, tested, manufactured, delivered, and supported by SUEZ.

The benefit to the Town of New Windsor is that you will have a single, knowledgeable point of contact at all times for your system. Any questions can be answered quickly, and any process adjustment can be made promptly by your SUEZ support team.

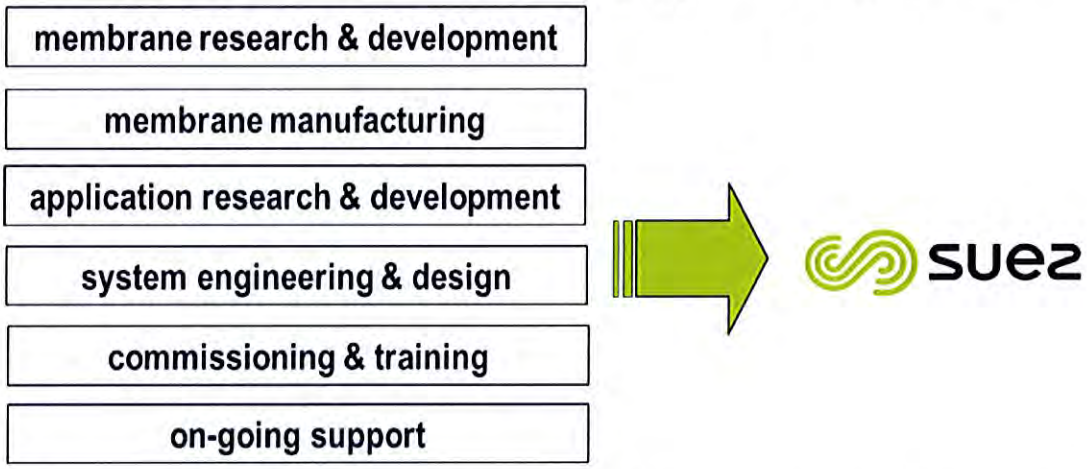

SUEZ is a proven leader in delivering tangible value to our clients over the life of the plant. Our measure of success is how well we deliver solutions that help our clients meet their critical objectives in each and every year of operation.

SUEZ has distinguished itself from other UF-MBR membrane manufacturers with its exceptional membrane products, deep technical expertise, mature service culture, and the quality and range of commissioning and post-commissioning service support offered to its clients. From interactive facility design meetings, detailed engineering, start-up, commissioning, performance testing and after-market services, the Town of New Windsor and MHE will have access to comprehensive support from SUEZ's skilled and experienced team and service packages.

We are at the ready to ensure that the successful delivery, implementation, and long term support of the **Caesar's Lane MBR.**

1.b Company History

From modest beginnings in 1980, ZENON Environmental Inc. became the global leader of low pressure membrane filtration technology. Spurred by the vision that membranes are the world's answer to water shortages, overuse, and pollution, the company has always focused on a single goal—to make superior membrane systems a cost-effective solution for everyone who needs them.

ZENON

Water for the World

The ZeeWeed ultrafiltration membrane, developed in 1990, was a paradigm shift in membrane technology. At that time, membrane systems were primarily using pressurized cartridges with many components and high energy requirements. ZENON transformed the industry with the introduction of membranes that are immersed directly into process tanks and need only a slight vacuum to filter water.

GE Water & Process Technologies acquired ZENON Environmental Inc. on June 1, 2006, uniting patented ZENON technologies with GE's corporate leadership and financial depth to provide unparalleled performance and the best overall water treatment solutions. GE Water & Process Technologies became a worldwide leading systems and services provider for municipal and industrial customers, supplying state-of-the-art water, wastewater and process system solutions. GE Water & Process Technologies generated ~$2.1 billion USD in revenues in 2016 with 7,500 highly skilled salesmen and engineers with strong digital capabilities.

On October 1, 2017, SUEZ purchased GE Water & Process Technologies. GE Water & Process Technologies now joins forces with SUEZ's Industrial Water activities to create the **Water Technologies & Solutions** business unit within the SUEZ Group. With a solid financial position and a wide breadth of portfolios, this business unit aims to be a worldwide leader in water and treatment solutions for the industrial and municipal markets.

ready for the resource revolution

SUEZ Water Technologies & Solutions now operates with over 10,000 employees and addresses the needs of over 50,000 customers worldwide. Additionally, relying on SUEZ's over 650 R&D staff and 17 Research & Excellence Centers, the business unit is committed to expanding its water treatment offerings and digital capabilities to deliver best-in-class solutions.

SUEZ WTS is the leading MBR company in the world and has achieved nearly 50% global market share and around 70 - 80% North American market share. Examples of available third-party research are provided below.

U.S. membrane bioreactor market revenue by product, 2014 - 2025 (USD Million)

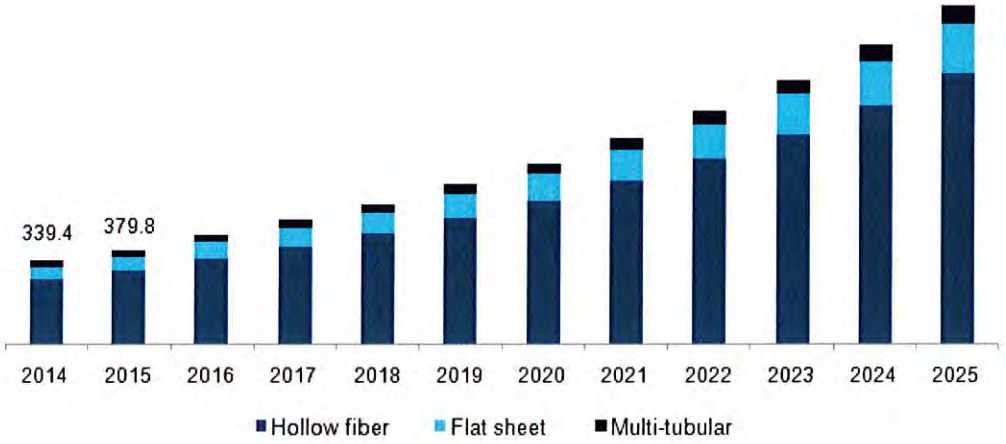

Source: Grand View Research - Membrane Bioreactor (MBR) Market Analysis By Product (Hollow Fiber, Flat Sheet, Multi-Tubular), By Configuration (Submerged, Side stream), By Application, And Segment Forecasts, 2018 – 2025

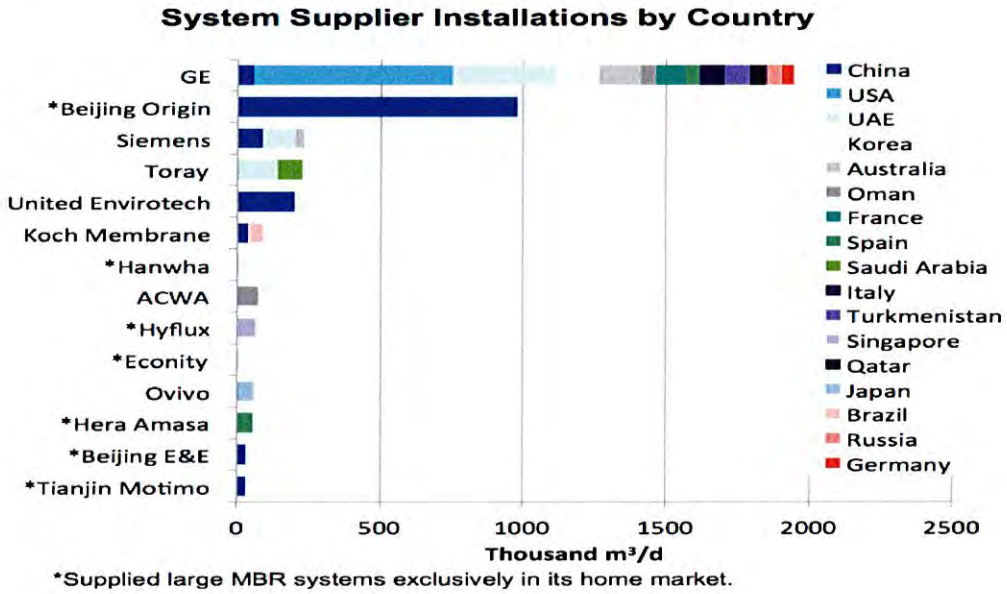

Source: Global Membrane Bioreactor Market: An Emerging Competitive Landscape

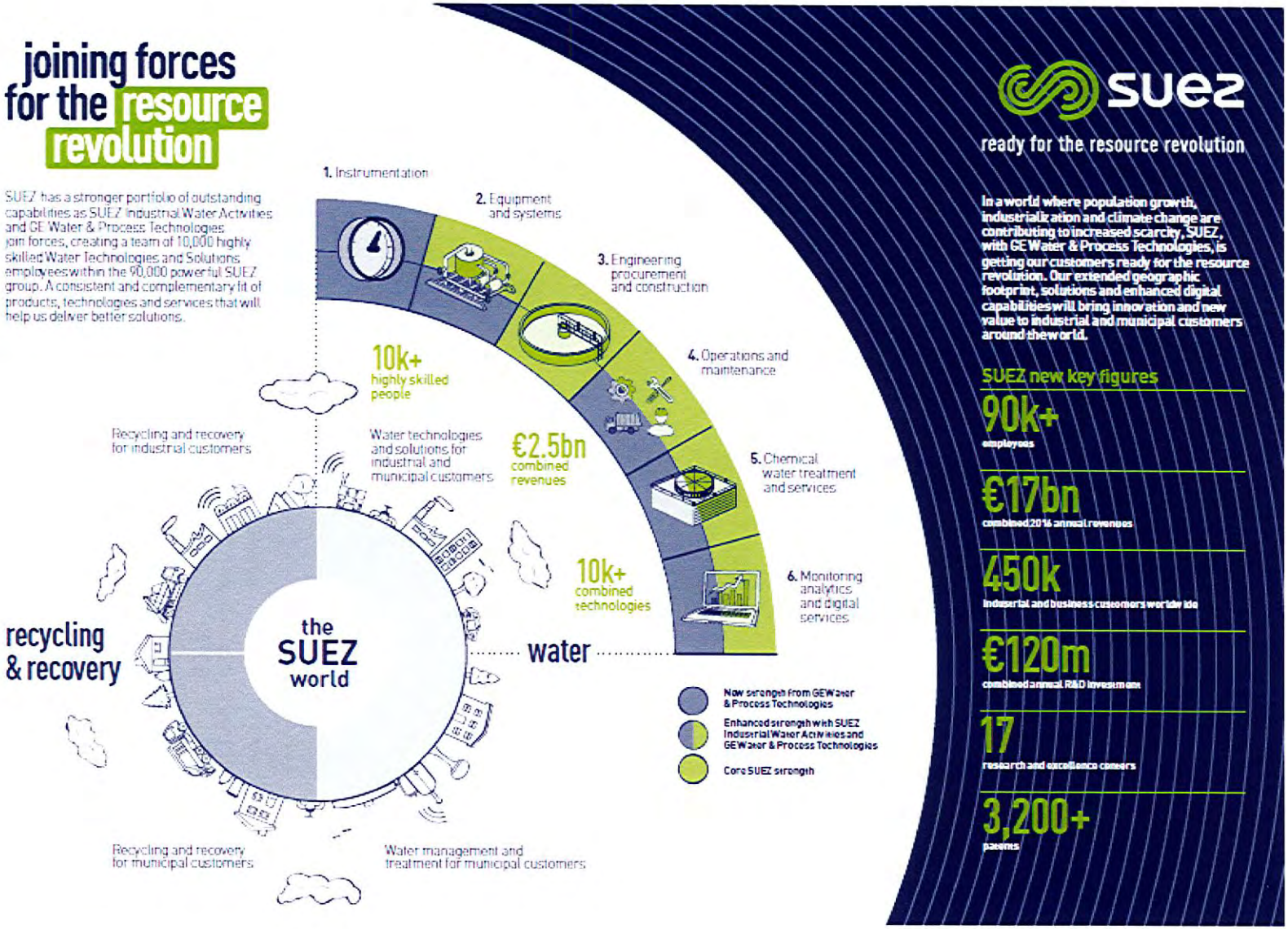
joining forces for the resource revolution
SUEZ has a stronger portfolio of outstanding capabilities as SUEZ Industrial Water Activities and GE Water & Process Technologies join forces, creating a team of 10,000 highly skilled Water Technologies and Solutions employees within the 90,000 powerful SUEZ group. A consistent and complementary fit of products, technologies and services that will help us deliver better solutions.
1. Instrumentation
2. Equipment and systems
3. Engineering procurement and construction
4. Operations and maintenance
5. Chemical water treatment and services
6. Monitoring analytics and digital services
10k+ highly skilled people
€2.5bn combined revenues
10k+ combined technologies
Recycling and recovery for industrial customers
Water technologies and solutions for industrial and municipal customers
recycling & recovery
the SUEZ world
water
Recycling and recovery for municipal customers
Water management and treatment for municipal customers
New strength from GE Water & Process Technologies
Enhanced strength with SUEZ Industrial Water Activities and GE Water & Process Technologies
Core SUEZ strength
SUEZ
ready for the resource revolution
In a world where population growth, industrialization and climate change are contributing to increased scarcity, SUEZ, with GE Water & Process Technologies, is getting our customers ready for the resource revolution. Our extended geographic footprint, solutions and enhanced digital capabilities will bring innovation and new value to industrial and municipal customers around the world.
SUEZ new key figures
90k+ employees
€17bn combined 2016 annual revenues
450k industrial and business customers worldwide
€120m combined annual R&D investment
17 research and excellence centers
3,200+ patents

1.c UF/MBR operations

From its inception 42-years ago, the company had endeavored to listen to customers and anticipate the needs of the market in order to respond with practical solutions for drinking water, wastewater treatment, and water reuse. Today, SUEZ carries on with a complete family of UF/MBR membrane products which provide large-, medium- and small-scale solutions for municipalities, industries, land development and emergency applications.

ZeeWeed ultrafiltration membranes are utilized for drinking water, wastewater, tertiary, and water reuse applications, as well as industrial feedwater and reverse osmosis (RO) pretreatment. The advanced technology is operational in thousands of municipal, industrial, and commercial applications worldwide

SUEZ's global UF/MBR center of excellence in Oakville Ontario, Canada, is the focal point of SUEZ's ultrafiltration (UF) membrane research and development, as well as the design and delivery of UF-based water and wastewater treatment systems. The UF membrane division is 100% focused on developing, manufacturing, and supporting leading-edge, hollow fiber water and wastewater treatment solutions. **All design and engineering for the Caesars Lane MBR project will be directed out of the Oakville, Ontario UF/MBR center of excellence.**



SUEZ's global UF/MBR center of excellence located in Oakville, Ontario, Canada

1.d Membrane Manufacturing

With a world-class manufacturing facility located in Oroszlány, Hungary (the plant where the ZeeWeed 500 membrane modules proposed for the **Caesars Lane MBR** project would be produced), SUEZ leads the membrane industry with the world's largest capacity for membrane manufacturing. By leveraging the capabilities of this manufacturing hub, SUEZ can assure customers of on-time and on-budget product delivery no matter where treatment plants are located.

Built on a solid foundation of dedication and excellence, the SUEZ membrane manufacturing division is committed to delivering high quality membrane products to global customers. SUEZ owns and operates all of its manufacturing resources to ensure strict controls over the manufacturing process and rigid quality standards for every membrane module that leaves the plants.



membrane manufacturing plant located in Oroszlány, Hungary

SUEZ employs the industry's most advanced manufacturing techniques, which enables the production of top-quality membranes with maximum efficiency. The manufacturing process is almost completely automated, which minimizes quality issues and maximizes product consistency.

While the manufacturing facilities maintain an inventory of products, we constantly monitor bidding activity to confirm that sufficient manufacturing capacity is available to

meet customer demand and that adequate product supplies are available to avoid project delays.

Prior to shipping, all of our products undergo a rigorous inspection to verify that all system components meet the quality and performance standards that SUEZ customers have come to expect.

Over the next several years, membranes are expected to comprise more than 20 percent of the global market for water and wastewater treatment equipment. Our proactive manufacturing plan has accounted for this growth, and SUEZ is well positioned to increase manufacturing capacity over this period.

Our production increases, coupled with continued efficiencies in manufacturing, will enable our manufacturing teams to deliver high quality membrane products quickly and efficiently while constantly improving system performance and value. Through these streamlining efforts, SUEZ also strives to improve on a key success metric shared by both the company and its customers—reducing the cost of each gallon of water treated.

Globally, SUEZ currently has over 300,000 square feet of manufacturing and production area at its disposal. Over 660 employees are utilized in the manufacturing of the ZeeWeed membranes and assembling of process equipment.

2 Qualifications

2.a Quality Assurance and Quality Control

SUEZ is committed to always meet and exceed customer expectations and continuously improving the quality of our products, services and processes. Please see **Appendix B** for SUEZ quality policies and ISO certifications.

2.b Bonding Capacity Letter

Surety bonds are a valuable tool to manage the risk of a large infrastructure project, and can be mandated on federally funded projects. SUEZ Water Technologies & Solutions is able to supply all forms of surety bonds. For a single project, SUEZ WTS System USA bonded obligation can reach $200 million.

Please see Appendix C – Bonding Capacity Letter for SUEZ WTS System USA.

2.c MBR Experience and Installation Lists

SUEZ is the world leader in membrane filtration technology for wastewater treatment and has been a pioneer in the development of membranes for all water and wastewater treatment applications. Developed in the early 1990's, the patented ZeeWeed membrane is well-proven, with hundreds of ZeeWeed MBR plants in operation around the world, in a variety of wastewater treatment applications.

SUEZ has more experience related to the design, delivery, commissioning, operation, and after-sales support of MBR systems than any other supplier in the world. From a small Canadian company started in 1980 by a university professor, to the delivery of the world's largest membrane wastewater treatment plants, SUEZ Water Technologies & Solutions has the knowledge, experience and capabilities to make the **Caesars Lane MBR** a successful one.

Treatment plants currently in operation using ZeeWeed membranes (including both wastewater and water treatment applications) range in size from less than 5,000 gallons per day to over 100 million gallons per day.

Total Number of ZeeWeed Membrane Treatment Plants Worldwide	> 2,300
Total Number of North American SUEZ MBR Installations	> 560
Total Number of ZeeWeed Municipal MBR Systems in USA	370
Years in Operation for Submerged SUEZ MBR System	29 years
Number of SUEZ MBR Facilities 5.0 mgd or greater in North America	24 operating
Date of First MBR Installation in North America	1993 (ZeeWeed MBR)
Largest Design Capacity in Operation in North America, AADF (mgd)	31 MGD

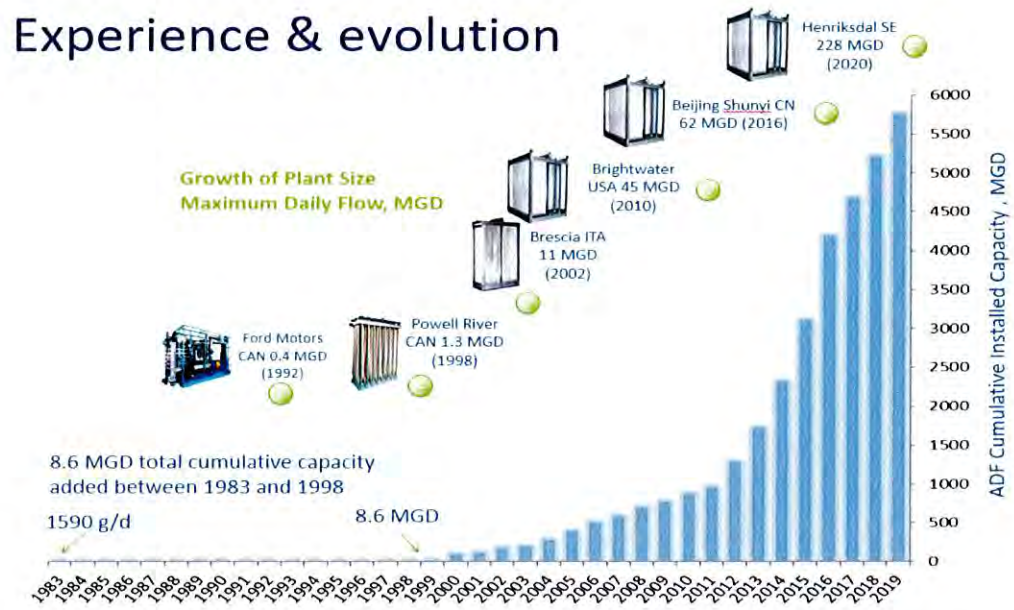

The **Caesars Lane MBR** will benefit from the experience gained and lessons learned through the completion of these previous MBR projects. SUEZ's regional knowledge combined with our experience in delivering membrane treatment projects of all sizes means that choosing SUEZ as a partner will substantially reduce risk and minimize additional project costs.

Highlights of SUEZ's extensive MBR experience include:

- ❑ First MBR installations, using Permaflow tubular membranes, in the early 1980s
- ❑ Earliest ZeeWeed immersed MBR systems in operation for more than 25 years
- ❑ Largest operating municipal MBR worldwide
- ❑ Largest operating industrial MBR worldwide
- ❑ Total MBR online treatment capacity that is more than double that of the next largest membrane supplier
- ❑ ZeeWeed wastewater treatment installations in 58 countries.
- ❑ 11 of the 12 largest MBR plants operating in the United States

2.c.1 Membrane Life

The following table shows a list of our installations with membrane life greater than 10 years and up to 22 years (based on first train or cassette replacement). The average SUEZ ZeeWeed membrane module life is 15.3 years. Based on the information provided we conservatively estimate an average membrane life greater than 15 years for the **Caesars Lane MBR**.

SUEZ MBR Installations Demonstrating Long Membrane Life

System name	State/ Province	ADF (MGD)	Commissioned	Years of Operation	Demonstrated Membrane Life
Thetis Lake Campground WWTP	BC	0.007	Aug 1995	27	20 [2]
Ganges Pollution Control Centre	BC	0.26	Dec 1996	26	15 [2]
Westview WWTP	BC	0.92	Aug 1998	24	22
Anthem WWTP	AZ	4.0	Feb 1999	24	12 [2]
Cohasset WWTP	MA	0.4	Aug 2000	22	10 [2]
Port McNicoll WWTP	ON	0.51	May 2001	21	21
Corona WWTP	CA	1.0	Dec 2001	21	16 [2]
American Canyon WWTP	CA	3.0	Aug 2002	19	13 [2]
Laguna County MBR	CA	0.5	Dec 2002	19	12 [2]
Rubes Creek WWTF	GA	2.0	Dec 2003	18	11 [2]
Field Community WWTP	BC	0.1	Apr 2004	18	18
Redlands WWTP	CA	7.2	Jun 2004	18	14
Traverse City WWTP	MI	7.1	Jul 2004	18	14 [2]
Duvall WWTP	WA	1.0	May 2005	17	11 [2]
Mariposa WRF	NM	0.5	May 2005	17	17
Cabezon WWTP	NM	1.0	Jun 2005	17	13 [1]
Crockery Township	MI	0.075	Jun 2005	17	15 [3]
Southshore WRF	AB	0.24	Nov 2005	16	16
South Kitsap WRF	WA	1.7	Mar 2006	16	12 [2]
Rio Vista	CA	1.0	Jul 2006	16	14 [2]
Randolph Township	OH	0.3	Oct 2006	15	15
Riverdale WWTP	MO	0.15	Oct 2006	15	15
Schofield Barracks WWTP	HI	4.2	Nov 2006	15	11 [2]
CNRL Horizon Oil Sands Sanitary System	AB	0.48	Nov 2006	16	16
Marco Island WWTP	FL	5.0	Dec 2006	15	12 [1]
Village of Conifer	CO	0.1	Jan 2007	15	10 [2]
Wyndgate MBR	MO	0.4	Mar 2007	15	11 [2]
Donlin Creek	AK	0.01	May 2007	15	15
Sterling WWTP	NC	0.19	Jul 2007	15	15
North Lake	ID	1.0	Aug 2007	14	12 [1]
North Regional WWTP	AZ	3.5	Sep 2007	14	10 [2]
Lewes WWTP	DE	1.5	Sep 2007	14	13 [2]
Beaver River Properties	AB	0.12	Sep 2007	14	14
Big Creek WWTP	CA	0.03	Sep 2007	14	11 [2]
Linwood WRF	GA	4.6	Oct 2007	14	11 [1]
Lake Quinault	WA	0.04	Oct 2007	14	14
Hutchinson MN	MN	0.72	Dec 2007	14	11 [2]
City of Odell WWTP	OR	0.42	Jan 2008	14	14
Broad Run WRF	VA	10	Mar 2008	14	14

System name	State/ Province	ADF (MGD)	Commissioned	Years of Operation	Demonstrated Membrane Life
Clear Lake WWTF	MN	0.36	Mar 2008	14	14
North Liberty	IA	1.69	Apr 2008	14	12 [1]
Carnation WWTP	WA	1.0	Apr 2008	14	14
Wolf Creek WRF	UT	0.4	May 2008	14	14
Butler Drive WRF	AZ	10	Jun 2008	14	10 [2]
Lake Tansi WWTP	TN	0.02	Jun 2008	14	14
Dover WWTP	ID	0.2	Aug 2008	13	13
Churchill County	NV	0.6	Sep 2008	13	13
North Kent Sewer Authority	MI	6.0	Oct 2008	13	10 [2]
Oxford WWTP	ON	3.6	Oct 2008	13	13
Whistler WWTP	BC	0.02	Oct 2008	13	13
Kilworth Retrofit MBR	ON	0.34	Nov 2008	13	10[1,3]
Front Range Airport	CO	0.025	Nov 2008	13	10 [2]
Rotonda WRF	FL	2.0	Dec 2008	13	13

Notes:
1) Plant has undergone a partial membrane replacement (i.e., some original trains are still in operation).
2) Plant has undergone a full membrane replacement.
3) Plant was shut down in Dec 2021.

2.c.2 SUEZ MBR Installation in USA and Canada

SUEZ Installations ≥ 0.05 MGD and less than 1 MGD

SUEZ has over 120 plants ranging between 0.05 and 1 MGD in the USA and Canada. The names of the plants, locations and commissioned dates can be provided as requested. A list has not been included to better highlight plants of higher capacity and those more closely relevant in scope and size to the **Caesars Lane MBR.**

SUEZ Installations between 1 and 5 MGD

SUEZ has over 50 plants with capacities ranging between 1 and 5 MGD in the USA and Canada. A partial list with the names of the plants, their locations and commissioned dates is provided below. Of these, a significant number have been in operation since before 2010.

Facility Name	City	State/ Province	Plant Capacity ADF (MGD)	Start-Up Date
Linwood WRF	Gainesville	GA	4.6	Aug 2007
Schofield Barracks WWTP	Oahu	HI	4.2	Nov 2006
Bonita Springs East WRF	Bonital Springs	FL	4.1	Mar 2007
Anthem WWTP Village Water Campus	Anthem	AZ	4	Feb 1999

Facility Name	City	State/ Province	Plant Capacity ADF (MGD)	Start-Up Date
Hollister Water Reclamation Facility	Hollister	CA	4	Jun 2008
Tri-City WPCP	Oregon City	OR	4	Dec 2010
Oxford	London	ON	3.6	Oct 2008
Lake Stevens Sewer District	Lake Stevens	WA	3.56	Jan 2012
North Regional WWTP	Lake Havasu	AZ	3.5	Sep 2007
Pooler WWTP	Pooler	GA	3.34	Dec 2004
Blaine WWTP	Blaine	WA	3.1	Aug 2010
American Canyon WWTP	American Canyon	CA	3	Aug 2002
Mid-Continent WRF	Wichita	KS	3	Jun 2010
Randolph Park	Randolph	MI	3	Dec 2003
Rubes Creek WWTF	Woodstock	GA	2.5	Dec 2003
Modesto WWTP	Modesto	CA	2.3	Jul 2010
SCLA MBR	Victorville	CA	2.23	Aug 2010
South Kitsap Water Reclamation Facility	Port Orchard	WA	1.7	Mar 2006
North Liberty	North Liberty	IA	1.69	Apr 2008
Far West - Section 14	Yuma	AZ	1.3	Jul 2011
Dodge City WRF	Dodge City	KS	1.25	Sep 2011
Woodstock	Woodstock	GA	1.2	Aug 2009
Canyon at Wild Basin	Austin	TX	1	Apr 1998
Jefferson Village Square Mall	Lake Hopatcong	NJ	1	Jul 1994
Berryville WWTP	Berryville	VA	1	Nov 2011
Cabezon WWTP	Rio Rancho	CA	1	Jun 2005
Corona WWTP	Corona	CA	1	Dec 2001
Duvall WWTP	Duvall	WA	1	May 2005
Fowler WRF	Cumming	GA	1	Feb 2004
Jordanelle WWTP	Herber City	UH	1	Jul 2009
Lancaster Water Reclamation Facility	Lancaster	CA	1	Aug 2007
North Lake	Donnely	ID	1	Aug 2007
Rio Vista	Rio Vista	CA	1	Jul 2006

SUEZ Installations greater than 5 MGD

SUEZ has 24 plants with capacities greater than 5 MGD in the USA and Canada. The names of the plants, their locations and commissioned dates are provided below. Of these, eight have been in operation since 2010.

Facility Name	City	State/ Province	Plant Capacity ADF (MGD)	Start-Up Date
Brightwater WWTP	Woodinville	WA	31	Aug 2011
Riverside WQCP	Riverside	CA	26	Apr 2015
North Las Vegas WRF	North Las Vegas	NV	25	Jun 2011
Visalia WRF	Visalia	CA	22	Sep 2014
Euclid WWTF	Euclid	OH	22	Jun 2018
Abilene WRF	Abilene	TX	18.7	Jun 2015
Yellow River WRF	Lilburn	GA	18	May 2011
Ballenger- McKinney WRF	Frederick	MD	15	Dec 2013
Cox Creek WRF	Annapolis	MD	15	Nov 2015
Jordan Basin WRF	Riverton	UH	14	Jun 2012
Michelson WRP	Irvine	CA	11	Dec 2013
Johns Creek Environmental Campus	Roswell	GA	11	Sep 2009
Broad Run WRF	Ashburn	VA	10	Mar 2008
Butler WRF	Peoria	AZ	10	Jun 2008
Redlands WTF	Redlands	CA	7.2	Jun 2004
Southwest WRF	Henderson	NV	8	Dec 2011
Spokane County Regional WRF	Spokane	WA	8	Aug 2011
Brandon WRF	Brandon	MB	8	Oct 2009
Brush Creek WWTP	Cranberry Township	PA	7.2	Jun 2018
Traverse City Regional WWTP	Traverse City	MI	7.1	Jul 2004
Beaver Creek WWTP	Powell	TN	6	Dec 2009
Parcc Side Clean Water Plant	Grand Rapids	MI	6	Oct 2008
Ironhouse WRF	Oakley	CA	5.4	Jun 2011
Marco Island WWTP	Marco Island	FL	10.2	Mar 2007

2.c.3 SUEZ MBR Global Installations (Excluding USA and Canada)

SUEZ Installations ≥ 1 MGD and less than 5 MGD

SUEZ has an extensive global installation list of facilities between 1 and 5 MGD treating municipal wastewater. A partial list with the names of the plants, locations, and

commissioned dates can be provided as requested, but is confidential and has not been included in this proposal.

SUEZ Installations greater than 5 MGD (partial list)

SUEZ has designed and delivered numerous MBR facilities throughout the world with capacities greater than 5 MGD that treat municipal wastewater. They demonstrate SUEZ's global presence, capabilities, and depth of experience delivering large MBRs. A partial list with the names of the plants, location, and capacity is provided below for reference.

Facility Name	Country	Plant Capacity ADF (MGD)	Start-Up Date
Henriksdal WWTP	Sweden	142	2020
Luo Fang WWTP	China	106	2018
Shenzen	China	105	2018
Seine Aval WWTP	France	59	2017
Beijing Shunyi WWTP	China	48	2016
Himmerfjardern	Sweden	41.85	2022
Changi LM1 and LM2	Singapore	27.74/47.55	2015/2016
Busan City MBR	Korea	26.42	Jul 2012
Brussels Sud WWTP	Belgium	23	2018
Turkmenbashi MWWTP	Turkemenistan	18.49	Aug 2012
Lusail WWTP	Qatar	16.19	Oct 2010
Cannes Aquaviva WWTP	France	15.67	Dec 2011
La Morèe WWTP	France	15.67	Jan 2013
Pearl GTI	Qatar	14.9	Jun 2011
Assago	Italy	13.3	2016
Brescia MWWTP WWTP	Italy	11	Oct 2002
Syndial Porto Marghera WWTP	Italy	10.57	Nov 2005
Gava MBR WWTP	Spain	8.45	Jun 2010
Wuxi Meicun WWTP	China	7.94	Dec 2008
Avila WWTP	Spain	7.94	Oct 2012
Cleveland Bay WWTP	Australia	7.74	Apr 2008
Punta Gradelle WWTP	Italy	7.4	Dec 2014
Christies Beach	Australia	7.13	May 2012
Borghetto Santo Spirito	Italy	7.13	Jun 2010
Seoul	Korea	6.68	Jul 2012
Dubai Sports City WWTP	United Arab Emirates	6.61	Jun 2009
Ulu Pandan	Singapore	6.08	Dec 2006
Rozzano WWTP	Italy	5.68	Dec 2010

Facility Name	Country	Plant Capacity ADF (MGD)	Start-Up Date
Ile D'Arault Orleans WWTP	France	5.55	Oct 2011
Cairns Cleaner Seas - Northern Plant	Australia	5.13	Sep 2009
Cairns Cleaner Seas - Southern Plant	Australia	5.13	Oct 2009

Water Technologies & Solutions
fact sheet

2.c.4 - Large MBR Experience

We are proud to say that most of the world's largest MBRs use SUEZ ZeeWeed technology and SUEZ can bring this kind of experience to benefit our clients.

Experience, Expand, Evolve with ZeeWeed



Addressing the everchanging needs of Municipal customers looking to:

- Lower the CAPEX associated with expanding capacity
- Increase treatment capacity in a smaller footprint
- Reduce annual energy and maintenance costs
- Enjoy longer membrane life with simplified maintenance

Performance

- High flux dedicated MBR membrane chemistry since 2007 with permeability > 900 lmh/bar
- True UF membrane for over 25 years with proven 0.035 µm nominal pore size
- Patented LEAPmbr aeration providing exceptional energy consumption savings
- Superior fiber strength, 60x greater than non-reinforced PVDF membranes

Reliability

Exceptional membrane reliability and product life with many municipal customers achieving 12 to 16 years operation; longest proven life 21 years!

SUEZ stands by its product offering Peace of mind with warranties up to 15 years in duration.

Proven Experience

Nearly 2500 MBRs globally running with ZeeWeed 500 membranes. More than 1.3 million operating modules treating over 27000 MLD (7200 MGD) daily.

Flexibility & Simplicity

Configurable product to provide plant layout versatility for easy future expansion even for those with footprint constraints.

Demonstrated simple retrofit solutions for conventional upgrades and more than 15 other MBR membrane suppliers.

Find a contact near you by visiting www.suezwatertechnologies.com and clicking on "Contact Us."

*Trademark of SUEZ; may be registered in one or more countries.

©2022 SUEZ. All rights reserved.

ZeeWeed 500 in Action



Henriksdal WWTP, Sweden

ADF 536 MLD (142 MGD)

MDF 864 MLD (228 MGD) PH1

Commissioned 2020

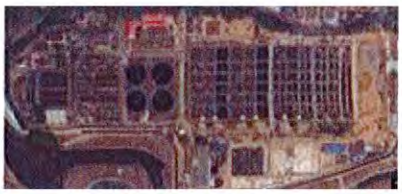

Luo Fang WWTP, China

ADF 400 MLD (106 MGD)

MDF 462 MLD (122 MGD)

Commissioned 2018



Seine Aval WWTP, France

ADF 218 MLD (59 MGD)

MDF 348 MLD (92 MGD)

Commissioned 2017



Euclid WWTF, USA

ADF 83 MLD (22 MGD)

MDF 250 MLD (66 MGD)

Commissioned 2018



Beijin Shunyi WWTP, China

ADF 180 MLD (48 MGD)

MDF 234 MLD (62 MGD)

Commissioned 2016



Brussels Sud WWTP, Belgium

ADF 86 MLD (23 MGD)

MDF 190 MLD (44 MGD)

Commissioned 2018



Oxford WWTP, Canada

ADF 13 MLD (3.6 MGD)

MDF 25 MLD (6.8 MGD)

Commissioned 2008

Proven membrane life 14 years



Traverse City WWTP, USA

ADF 27 MLD (7.1 MGD)

MDF 64 MLD (17 MGD)

Commissioned 2005

Proven membrane life 16 years



Brescia WWTP, Italy

ADF 30 MLD (8 MGD)

MDF 60 MLD (16 MGD)

Commissioned 2002

Proven membrane life 14 years

2.d Reference Installations

The Preselection Documents request the supplier to provide references as specified in EJCDC P-400 Bid Form Procurement Document, as well as in Section 455000, Item 1.5.A.3-A.4.

EJCDC P-400 Bid Form Compliant References

SUEZ has provided detailed **Bid Form references** for the following facilities:

- Broad Run Water Reclamation Facility
- Linwood Water Reclamation Facility (siphon)
- Brush Creek Water Reclamation Facility (siphon)
- Loch Sheldrake WWTP

Refer to **Section 6 – Bidding Documents**

A summary list of SUEZ North American MBR installations for the treatment of municipal wastewater is provided in Section 2.c.2. The references are tabulated for installations of less than 1 MGD, installations ranging in capacity from 1 to 5 MGD, and installations of 5 MGD or greater.

A summary list of SUEZ International MBR installations for the treatment of municipal wastewater is provided in Section 2.c.3. The references are tabulated for installations ranging from 1 to 5 MGD and installations of 5 MGD and greater.

New York State and Ten States Standard Installations

The following states are signatory and have a member represented on the board of the Great Lakes-Upper Mississippi River Board of State and Provincial Public Health and Environmental Managers. Each state and province generally adhere to the Ten State Standards - Recommended Standards for Wastewater Facilities:



Illinois - Indiana - Iowa - Michigan - Minnesota - Missouri - New York - Ohio - Ontario - Pennsylvania - Wisconsin

As specified, SUEZ has provided a list of SUEZ MBR installations in each of the Ten States and Ontario that have an ADF ≥ 1 MGD in the following table. **Two of the references are retrofits of flat plate membrane systems including the Dundee, MI WWTP retrofit where SUEZ replaced Kubota membranes with ZW500 membranes in 2017.**

Facility Name	City	State/ Province	Plant Capacity ADF (MGD)	Start-Up Date
Euclid WWTP	Euclid	OH	22	Jun 2018
Parcc Side Clean Water Plant (North Kent Sewer Authority)	Grand Rapids	MI	6.0	Oct 2008
Traverse City Regional WWTP	Traverse City	MI	7.1	Jul 2004
Brush Creek WWTP	Cranberry Township	PA	7.2	Jun 2018

Oxford PCP Facility	London	ON	3.6	Oct 2008
Lagoon Lane WWTP	Bracebridge	ON	2.1	Jun 2011
Leoni WWTP	Leoni Township	MI	2.0	Jul 2022
North Liberty PCP Facility	North Liberty	IA	1.7	Apr 2008
Dundee WWTP	Village of Dundee	MI	1.5	Jun 2017
Jackson WWTP	Jackson	OH	2.0	Oct 2009
Fallsburg WWTP	Fallsburg	NY	0.56 [1]	Jan 2019

Note: Included for reference only.

Other facilities proximate to the Town of New Windsor in the Northeast USA that are ≥ 0.1 MGD are shown in the following figures.

NE USA MBR Plants >0.1 MGD ADF

Location	ADF (mgd)
Cox Creek, MD	15.0
Frederick County, MD	15.0
Loudoun County, VA	10.0
Cranberry Township, PA	7.2
Woodstock, VA	2.0
Purcellville, VA	1.5
Lewes, DE	1.5
Onancock, VA	0.75
Berryville, VA	0.7
Mansfield, PA	0.7
Skillman Village	0.7
Mystic Harbour, MD	0.45
Fallsburg, NY	0.56
Middleburg, VA	0.5
Worton, MD	0.26
Port Deposit, MD	0.15
Culpeper, VA	0.1
Boyce, VA	0.1
Coolbaugh, PA	0.1
Landings, MD	0.1

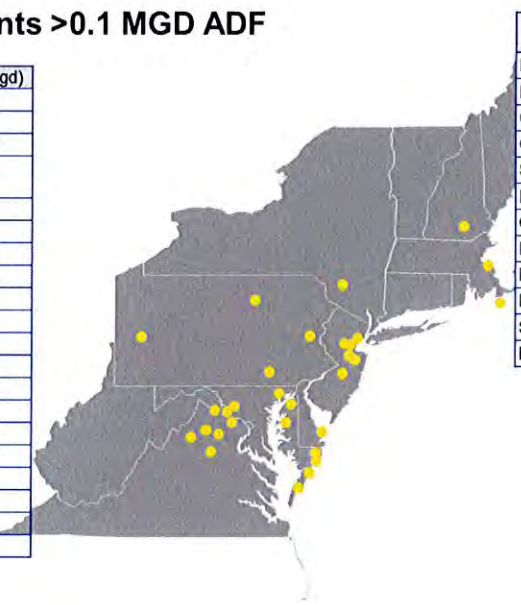

Location	ADF (mgd)
Nantucket, MA	2.0
Pikebrook, NJ	0.45
Cohasset, MA	0.45
Greenwood Lakes, NJ	0.3
Smith Island	0.13
Mansfield Farms, NJ	0.18
Oakwood Village, NJ	0.18
Port Deposit, MD	0.15
Navy Annapolis, MD	0.20
Paradise Township, PA	0.18
Sunrise at Jefferson, NJ	0.13
Plumsted, NJ	0.11

Section 455000 Compliant References

SUEZ has 24 reference installations in North America with an ADF ≥5 MGD. Of these, eight have been in operation since before 2010. A list of the North American facilities including their location, ADF and commissioned date is provided in Section 2.C.2. Examples include the following:

Johns Creek, GA
ADF 10.9 MGD & MDF 24.6 MGD
Commissioned September 2009



Broad Run, VA
ADF 10 MGD & MDF 18.8 MGD
Commissioned March 2008



Yellow River, GA
ADF 18.3 MGD & MDF 22 MGD
Commissioned May 2011



Visalia, CA
ADF 22 MGD & MDF 44 MGD
Commissioned July 2016



Riverside, CA
ADF 26 MGD & MDF 48 MGD
Commissioned March 2016



Cox Creek, MD
ADF 15 MGD & MDF 30 MGD
Commissioned June 2017



Of the SUEZ facilities with an ADF ≥5 MGD, the following were selected as specification compliant references of municipal wastewater MBRs delivered by SUEZ.

1. Broad Run Water Reclamation Facility
2. Brush Creek Wastewater Treatment Plant
3. Beaver Creek Water Reclamation Facility
4. Cox Creek WRF
5. Ballenger-McKinney Water Reclamation facility

In addition to the plants referenced above, these facilities highlight SUEZ's wide-ranging experience with the design and delivery of membrane bioreactor projects. Each incorporates SUEZ's ZW500 membrane and process equipment designed and supplied by SUEZ. Detailed information sheets for each facility follow:

Broad Run Water Reclamation Facility





plant name	**Broad Run Water Reclamation Facility**
owner (*location*):	Loudoun Water (*Ashburn, Virginia*)
installation type:	new facility
project method:	design, bid, build
commissioned:	March 2008, expansion in 2010, expansion in 2024

contract information	
owner/operator contact:	Mike Rumke – Superintendent of BRWRF Tel: (703) 717-1859 Email: *mrumke@loudounwater.com*
design engineer	Hazen & Sawyer
general contractor	PC Contruction

description of facility	
system type:	ZeeWeed MBR
feed source:	municipal wastewater (12 to 25°C)
process:	enhanced nutrient removal
effluent use:	surface water discharge, water reuse for non-potable purposes
unit operations:	influent pumping, course screens, grit removal, primary clarification, fine screens, biological treatment, membrane filtration, sludge thickening, anaerobic digestion, GAC, dewatering UV disinfection
process configuration:	modified 5-stage Bardenpho process (anaerobic, pre-anoxic, aerobic, post-anoxic, aerobic zones, 2 recycles + RAS recycle)
membrane configuration:	12 membrane trains (L:40ft x W:9ft x D:12.3ft SWD:9.5-10.3ft) 4 cassettes per train in two rows (space for 5 cassettes) 192 modules per train in 48-module cassettes, 2,304 modules total
membrane type:	ZeeWeed 500D 340 ft^2 & 370 ft^2 modules manufactured by SUEZ
aeration type:	cyclic aeration, 225 dcfm per cassette
cassette access:	aluminum covers on membrane tanks, lifting bracket for cassette removal, cassette laydown on membrane tank grating
membrane life:	14.3 years to date
membrane replacement history:	no modules replaced or repaired facility will be expanded by upgrading to LEAP aeration and ZeeWeed 500D 430 ft^2 in 2024
Warranty Information	2 + 8 pro-rated membrane warranty

design & operational information	parameter	influent	effluent
influent & effluent design criteria:	BOD (mg/L)	168	<5
	TSS (mg/L)	108	<1
	TKN(mg/L)	39	-
	NH_3-N(mg/L)	26	<1
	TN(mg/L)	7	<4
	TP (mg/L)	-	≤0.1 for 24h
	turbidity (NTU)	-	≤0.5 for 100%
	alkalinity (as $CaCO_3$)	150	-

flow & net flux:		flow (mgd)		flux (gfd)		
		design	operating	design	operating	@20°C
	ADF	10	4.2	12.8	4.9	4.6
	MMF	11	-	14.0	-	-
	PHF	18.8	5.1	26.2	6.0	6.6

TMP range	design: 0 to 8 psi	operating: 0.3 to 4 psi
MLSS:	design: 8,000-9,600 mg/L in bioreactor 10,000-12,000 mg/L in mem tank	operating: 7,300-11,500 mg/L in bioreactor 8,500-14,100 mg/L in mem tank
plant performance:	plant meeting design objectives by performance test	

cleaning information	frequency		volume (gal/clean)	
maintenance clean:	design	actual	design	actual
NaOCl (200 mg/L)	2/week	1/week	6.8	~7
citric acid (2000 mg/L)	1/week	-	13.5	~14
recovery clean:	design	actual	design	actual
NaOCl (1000 mg/L)	2/year	2/year	250	~250
citric acid (2000 mg/L)	2/year		100	~100

**chemical consumption volumes based on 10.3%wt/wt NaOCL and 50%wt/wt citric acid*

PFD	Broad Run Water Reclamation Facility

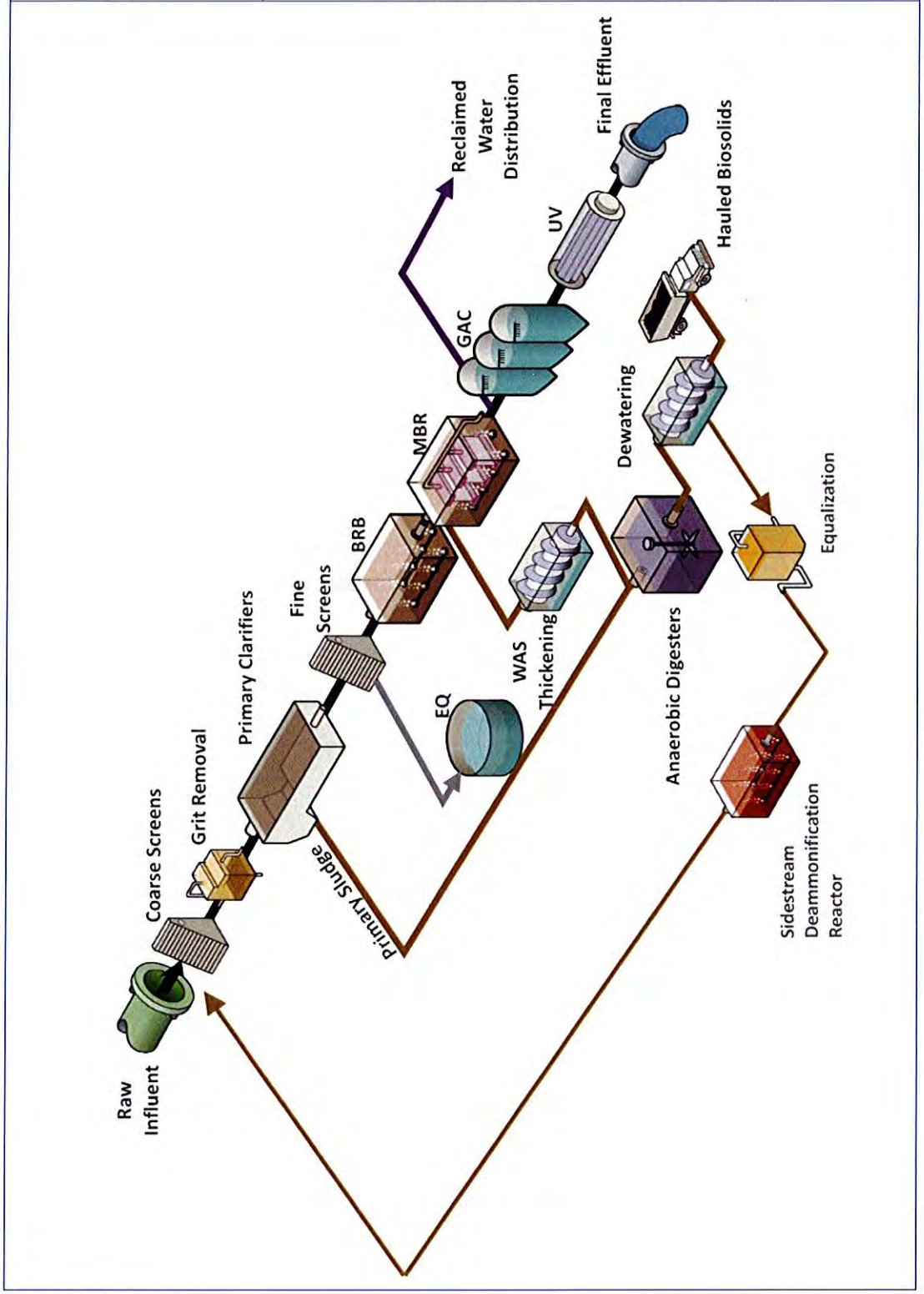

Brush Creek Water Reclamation Facility





plant name	**Brush Creek Water Pollution Control Facility**
owner (*location*):	Cranberry Township (*Cranberry, Pennsylvania*)
installation type:	retrofit of existing facility
project method:	design, bid, build
commissioned:	August 2018

contract information	
owner/operator contact:	Mike P. Sedon - Plant Operations Manager *Cranberry Township* Tel: 724-776-4806 Email: mike.sedon@cranberrytownship.org
design engineer:	GHD
general contractor:	Wayne Crouse Inc.

description of facility	
system type:	ZeeWeed LEAPmbr
feed source:	municipal primary effluent (11 to 20°C)
process:	enhanced biological nutrient removal, **gravity/siphon design**
effluent use:	surface water discharge to Brush Creek
unit operations:	influent pumping, bar screens, vortex grit removal, primary clarification, 2-mm fine screens, biological treatment, rotary drum thickener, belt filter press, sludge holding tanks, membrane filtration, chlorination, post aeration
process configuration:	Bardenpho process (pre-anoxic & aerobic zones, 1 recycle)
membrane configuration:	currently 6 membrane trains expanding to 8 trains in the future membrane tank dimensions: (L:70ft x W:9ft x D:13ft) 10 cassettes per train in a single row (48-module cassettes) 444 modules per train, 2664 modules total
membrane type:	ZeeWeed 500D 370 ft^2 modules manufactured by SUEZ
aeration type:	LEAPmbr aeration 80/160 dcfm per cassette in LEAP-Lo & LEAP-Hi respectively
cassette access:	aluminum grating on membrane tanks, lifting bracket for cassette removal, cassette laydown on membrane tank grating
membrane life:	4 years to date
warranty information	2+8 years

Water Technologies & Solutions

plant name	Brush Creek Water Pollution Control Facility
membrane replacement history:	no modules repaired or replaced to date
Current additional services provided:	Insight basic, 24/7 technical support services, two 3-day service visits during the first 2 years of operations

design & operational information	parameter	influent	effluent
influent & effluent design criteria:	cBOD5 (mg/L)	324	≤10 (summer) ≤20 (winter)
	TSS (mg/L)	374	≤1 for 90% ≤2 for 100%
	NH3-N (mg/L)	33.0	≤1.5 (summer) ≤3.5 (winter)
	TP (mg/L)	6.4	≤ 3 as P
	turbidity (NTU)	-	≤0.2 for 90% ≤0.5 for 100%

flow & net flux:	flow (mgd)			flux (gfd)		
		design	operating	design	operating	@20°C
	ADF	7.2	3.4	10.96	11.3	12.0
	MMF	10.3	-	12.53	-	-
	MDF	19.0	-	19.24	-	-
	PHF	24.4	6.8	24.70	13.4	14.0
TMP range	design: 0 to 8 psi			operating: 0.1 to 7.7 psi		
MLSS:	design: 10,000-12,000 mg/L in mem tank			operating: 7,000-10,000 mg/L in bioreactor 6,800-12,200 mg/L in RAS		
plant performance:	plant meeting design criteria in performance test					

cleaning information	frequency		volume (gal/clean)	
maintenance clean:	design	actual	design	actual
NaOCl (200 mg/L)	≤1/week	1/week	14	14
citric acid (2000 mg/L)	≤1/week	1/week	26	26
recovery clean:	design	actual	design	actual
NaOCl (1000 mg/L)	≤4/year	0/year	312	None to date
citric acid (2000 mg/L)	≤4/year	0/year	121	None to date

Beaver Creek Water Reclamation Facility





plant name	**Beaver Creek Water Reclamation Facility**
owner (*location*):	Hallsdale Power Utility District (*Powell, Tennessee*)
installation type:	expansion
project method:	design, bid, build
commissioned:	December 2009
contract information	
owner/operator contact:	Nick Jackson - Plant Manager *Hallsdale Power Utility District* Tel: 865-922-7547 Email: *Njackson@hpud.org*
design engineer:	*JJ&G*
general contractor:	*3D Enterprises Contracting Corp.*
description of facility	
system type:	ZeeWeed MBR
feed source:	municipal wastewater (9 to 24°C)
process:	biological nutrient removal
effluent use:	surface water discharge to Beaver Creek
unit operations:	influent pumping, course screens, grit removal, 1-mm drum screens, biological treatment, membrane filtration, aerobic digestion, chlorine disinfection
process configuration:	two-stage nitrification/denitrification (3 pre-anoxic zones, 1 aerobic zone, RAS recycle)
membrane configuration:	4 membrane trains (L:78ft x W:9ft x D:13ft SWD:9.9-10.3ft) 10 cassettes per train in a single row (space for 11 cassettes) 456 modules per train in 48-module cassettes, 1824 modules total
membrane type:	ZeeWeed 500D modules manufactured by SUEZ
cassette access:	aluminum covers on membrane tanks, lifting bracket for cassette removal, cassette laydown on membrane tank covers
membrane life:	12.5 years to date
membrane replacement history:	no modules replaced or repaired
warranty information	2+8 prorated membrane warranty

plant name	Beaver Creek Water Reclamation Facility
additional services provided:	InSight-Basic, service visits

design & operational information	parameter	influent	effluent
influent & effluent design criteria:	BOD (mg/L)	190	≤1.5 (summer) ≤2.0 (winter)
	TSS (mg/L)	281	≤1.0
	TKN (mg/L)	35.3	-
	NH_3-N(mg/L)	23.6	≤0.5 (summer) ≤0.7 (winter)
	TP (mg/L)	8	-
	turbidity (NTU)	-	-

flow & net flux:		flow (mgd)		flux (gfd)		
		design	operating	design	operating	@20°C
	ADF	6.0	6	9.7	10.3	11.3
	MDF	9.7	8.9	15.0	14.4	15.5

TMP range	design: 0 to 8 psi	operating: 0.2 to 3 psi
MLSS:	design: 10,000-12,000 mg/L in mem tank	operating: 3,260-12,380 mg/L in bioreactor 4,300-14,100 mg/L in the RAS
plant performance:	plant meeting design objectives by performance test	

cleaning information	frequency	volume (gal/clean)	
maintenance clean:	actual	design	actual
NaOCl (200 mg/L)	2/week	13	18
citric acid (2000 mg/L)	0/week	25	-
recovery clean:	actual	design	actual
NaOCl (1000 mg/L)	2/year	347	300-375
citric acid (2000 mg/L)	2/year	697	275

PFD	Beaver Creek Water Reclamation Facility

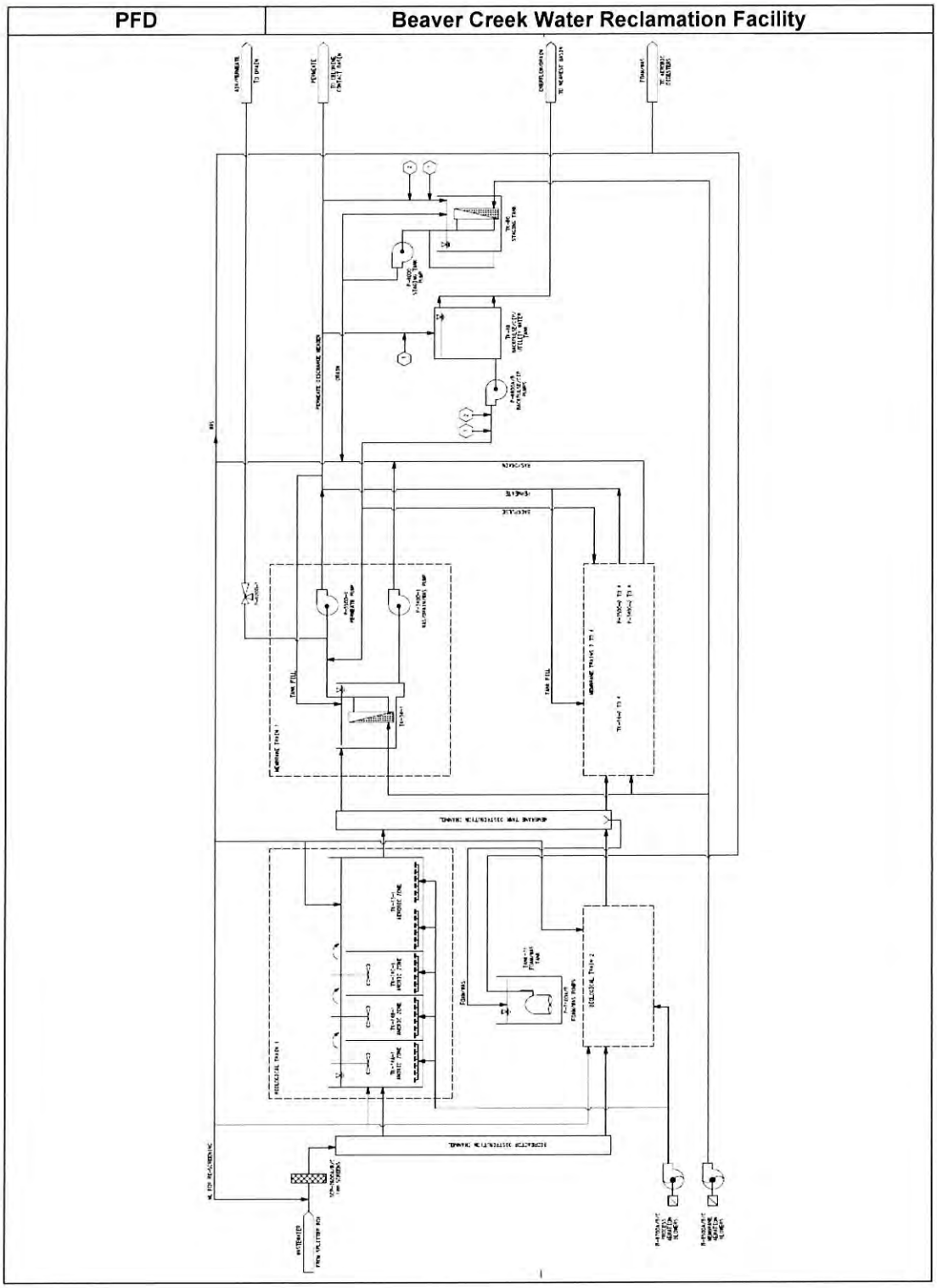

Cox Creek Water Reclamation Facility





plant name	**Cox Creek Water Reclamation Facility**
owner (*location*):	Anne Arundel County (*Pasadena, Maryland*)
installation type:	upgrade/expansion
project method:	design, bid, build
commissioned:	June 2017
contract information	
owner/operator contact:	Jerome (Jerry) Napora - *Plant Manager* Tel: 410-222-6060 Email: pwnapo22@aacounty.org
design engineer:	GHD
general contractor:	PC Construction Company
description of facility	
system type:	ZeeWeed MBR
feed source:	municipal primary effluent (12 to 26°C)
process:	enhanced nutrient removal
effluent use:	surface water discharge to Chesapeake Bay
unit operations:	influent pumping, course screens, grit removal, primary clarification, 2-mm fine screens, biological treatment, gravity thickener, odor control system, membrane filtration, UV disinfection
process configuration:	four-stage Bardenpho process
membrane configuration:	8 membrane trains (L:86ft x W:10ft x D:13ft SWD:9.5-10.3ft) 11 cassettes per train in a single row (space for 12 cassettes) 528 modules per train in 48-module cassettes, 4224 modules total
membrane type:	ZeeWeed 500D 370 ft² modules manufactured by SUEZ
aeration type:	cyclic aeration, 225 dcfm per cassette
cassette access:	aluminum grating on membrane tanks, lifting bracket for cassette removal, cassette laydown on membrane tank grating
membrane life:	5 years to date
membrane replacement history:	no modules replaced or repaired
warranty information	2+8 pro-rated membrane warranty

design & operational information	parameter	influent	effluent
influent & effluent design criteria:	BOD (mg/L)	251.5	≤1.0 for 90%
	TSS (mg/L)	134.0	≤2.0 for 100%
	TN(mg/L)	-	≤3.0
	TKN (mg/L)	51.8	-
	NH_3-N(mg/L)	38.8	≤0.5
	TP (mg/L)	8.2	≤0.3
	turbidity (NTU)	-	≤2.0 for 90%
		-	≤2.0 for 100%
	alkalinity (mg/L as $CaCO_3$)	170	-

flow & net flux:		flow (mgd)		flux (gfd)		
		design	operating	design	operating	@20°C
	ADF	15	9.4	9.6	8.5	8.3
	MMF	19.4	-	12.4	-	-
	PHF	30	21.2	22.3	22	21.8

TMP range	design: 0 to 8 psi	operating: 0.2 to 2.5 psi
MLSS:	design: 10,000-12,000 mg/L in mem tank	operating: 4,000-8,550 mg/L in bioreactor 5,400-11,400 mg/L in the RAS
plant performance:	plant meeting design objectives by performance test	

cleaning information	frequency		volume (gal/clean)	
maintenance clean:	design	actual	design	actual
NaOCl (200 mg/L)	2/week	2/week	11	17
citric acid (2000 mg/L)	1/week	1/week	21	29
recovery clean:	design	actual	design	actual
NaOCl (1000 mg/L)	4/year	2/year	412	432
citric acid (2000 mg/L)	4/year	2/year	160	175

Ballenger McKinney Water Reclamation Facility

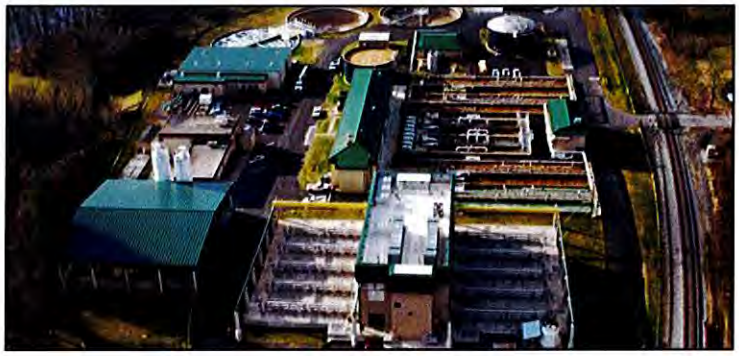

plant name	**Ballenger McKinney WWTP**
owner (*location*):	Frederick County (*Frederick, Maryland*)
installation type:	upgrade of existing facility
project method:	design, bid, build
commissioned:	December 2013
contract information	
owner/operator contact:	Charles Phelps - Plant Operator *Frederick Country* Tel: 301-600-3412 Email: cphelps@FrederickCountyMD.gov
design engineer	Jacobs
general contractor	Allan A. Myers
description of facility	
system type:	ZeeWeed MBR
feed source:	municipal wastewater (9 to 25°C)
process:	enhanced nutrient removal
effluent use:	surface water discharge to Monocacy River
unit operations:	25-mm course screens, vortex grit removal, oil & grease removal, primary clarification, 2-mm fine screens, biological treatment, membrane filtration, UV-post treatment disinfection
process configuration:	Bardenpho process (pre-anoxic + aerobic, 1 recycle)
membrane configuration:	10 membrane trains (L:54ft x W:21ft x D:18ft) 14 cassettes per train in two rows (48 module cassettes) 4400 modules total
membrane type:	ZeeWeed 500D 340 ft² modules manufactured by SUEZ
aeration type:	cyclic aeration, 225 dcfm per cassette
cassette access:	covers on membrane tanks, lifting bracket for cassette removal, cassette laydown on membrane tank covers
membrane life:	9.5 years to date
membrane replacement history:	no modules repaired or replaced.
warranty information	2+8 prorated membrane warranty
additional services provided:	membrane services agreement

design & operational information	parameter	influent	effluent
influent & effluent design criteria:	BOD (mg/L)	200	<2.0
	TSS (mg/L)	200	<2.0
	TKN (mg/L)	35	-
	NH3 (mg/L)	25	<1.0
	TN (mg/L)	-	<4.0
	turbidity (NTU)	-	≤0.2 for 95% ≤0.5 for 100%

flow & net flux:		flow (mgd)		flux (gfd)		
		design	operating	design	operating	@20°C
	ADF	15.0	6.9	13.5	11.3	10.4
	MWF	24.8	-	-	-	-
	MMF	19.5	-	-	-	-
	PDF	34.8	-	-	-	-
	PHF	34.8	24.3	30.0	19.5	21.3

TMP range	design: 0 to 8 psi	operating: 0.5 to 1.9 psi
MLSS:	design: 10,000-12,000 mg/L in mem tank	operating: 8,000 mg/L in bioreactor 8,000-12,000 mg/L in the RAS
plant performance:	plant meeting design objectives by performance test	

cleaning information	frequency		volume (gal/clean)	
maintenance clean:	design	actual	design	actual
NaOCl (200 mg/L)	2/week	0-2/week	38.5	21-40
citric acid (2000 mg/L)	2/week	2/week	32	30-35
recovery clean:	design	actual	design	actual
NaOCl (1000 mg/L)	2/year	2/year	819	600-1000
citric acid (2000 mg/L)	2/year	1/year	271	127-322

2.e Project Organization Chart

SUEZ believes that successful projects are built on quality teams and communication. Our proven approach is to provide a dedicated project team for the **Caesars Lane MBR** project that will provide the most extensive municipal membrane WWTP delivery experience in the industry. The project team in place for the project will remain consistent throughout the life of the project and collectively shares the goal to ensure overall project success through:

- ❑ Frequent communication to strengthen the relationship with the Owner, Design Engineer, Installation Contractor;
- ❑ Comprehensive technical and commercial understanding and knowledge of the project ensuring milestones are met - including budget, schedule, regulatory, technical and other issues;
- ❑ Partnerships and communication protocols that will remain in place for the duration of the project.
- ❑ On-time delivery and the successful start-up of the project.

This defined project approach guarantees the Owner, Design Engineer and the Installation Contractor will receive the best possible support from SUEZ and therefore the best value for all stakeholders.

The design team currently assembled for the project is listed below. With all engineering and design being conducted out of SUEZ's Global UF/MBR Center of Excellence located in Oakville, Ontario, Canada.

Project Team Function	Team Member	Phone Number	Years of Experience Within SUEZ
Project Manager	Jonathan Lieberman	905 465 3030 x3109	19
Regional Manager	Graham Best	905 330 0881	25
NAM Process Leader	Joel Jackson	(289) 208-1045	13
Process Lead Engineer	Joel Citulski	(905) 334-7645	11
Mechanical Leader	Khasha Shafaei	(905) 465-3030 x 3625	11
Mechanical Engineer	John Siegner	(905) 465-3030 x 3302	19
Electrical Lead	Henry Xu	(905) 465-3030 x 3367	13
Electrical/Control Engineer	Dorothy Courtney	(905) 465-3030 x 3455	19
Programming Engineer	Anil Varma	(905) 465-3030 x 3262	21
NAM Field Operations Manager	Gilberto Perkins	(425) 828-2400 x 1458	18
Commissioning Field Representative	Sandor Tulok	(905) 465-3030 x 3413	23
Regional Lifecycle Manager	Matt Stapleford	(416) 402-9869	21

Proposed Organizational Chart for the Caesars Lane MBR:

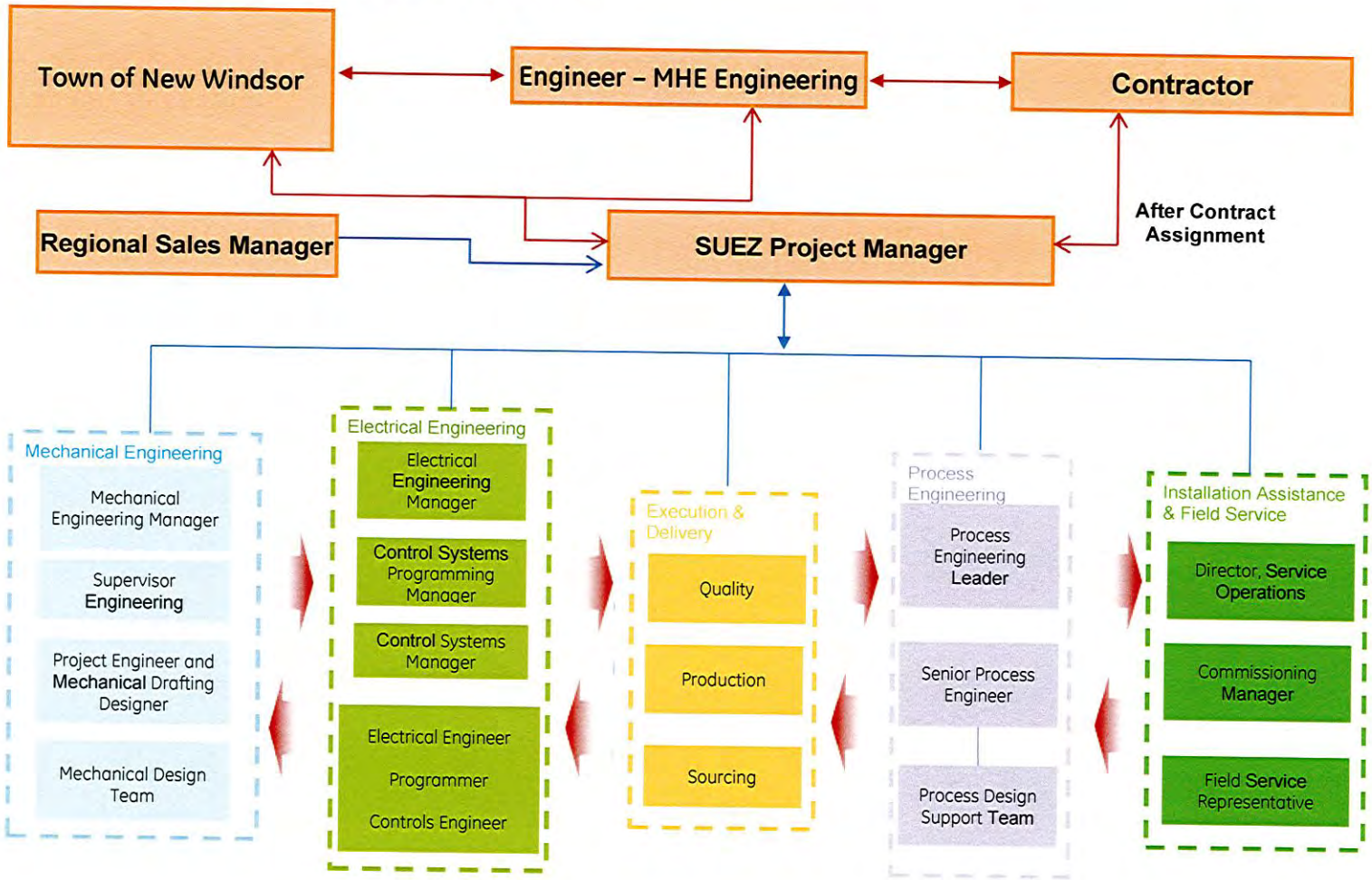

A brief description of the roles of the project team members and their respective groups are provided below. SUEZ has the most extensive expertise and depth of resources dedicated to MBR projects in the industry. This will guarantee the successful delivery and implementation of the MBR system for the **Caesars Lane MBR** project.

Project Manager –The project manager will be the primary contact for the project from project inception in the engineering design phase through facility start-up. He will be responsible for overall schedule control, communications and SUEZ's team coordination and will be the single point of contact for the Owner, Consulting Engineer and Construction Contractor during the project. The Project Manager proposed for this project has extensive experience working on similar large scale MBR projects.

Project Engineer – The project engineer will be responsible for the primary technical details of the project, including all process equipment, valve and instrumentation selection, final design of the layout and other components. The Project Engineer will actively participate in any design workshops and support the on-site activities, including the construction phase of the project to ensure that the design and systems integration are correctly implemented in the field.

Process Engineer – The process engineer will be responsible for the membrane and biological process design of the wastewater system; ensuring it is optimized and incorporates best practices. The Process Engineer will assist with equipment selection and specification, plant start-up, commissioning, and performance testing.

Mechanical Engineering – The project engineer will be responsible for the primary technical details of the project, including all piping design, process equipment, systems integration, valves and instrumentation selection, final design of the layout and other components. The Mechanical Engineer will actively participate in the design workshops and support the on-site activities, including the construction phase of the project to ensure that the design and systems integration are correctly implemented in the field.

Instrumentation & Controls Engineer – The instrumentation & controls engineer is responsible for ensuring a seamless integration of SUEZ controls with other processes in the plant. They will also take part in controls workshops with the Owner, Consulting Engineer and the Construction Contractor to ensure seamless integration with the overall control philosophy of the wastewater treatment plant.

Electrical Engineer – The electrical engineer is responsible for designing the hardware system associated with the SUEZ process. Our group of electrical engineers has significant wastewater treatment controls engineering experience that spans from designing and programming small controllers to plant wide SCADA systems, from relay logic controls to starter and VFD panels.

PLC Programming Engineer– The PLC programming engineer will write and test the control system PLC code for the SUEZ system. They will also assist the Owner, Consulting Engineer and Construction Contractor with the inclusion of the SUEZ controls in the overall plant SCADA system. They may also be available for site work during the commissioning phase of the project to ensure that the control system start-up is completed in a timely fashion.

Regional Sales Manager – The regional sales manager will be responsible for communicating with SUEZ's project manager and other parties on a regular basis to

ensure that the needs of the Owner, the Consulting engineer and the Contractor are being met.

Field Service Representative – The FSR is dedicated to on-site plant start up and commissioning activities. This individual will verify the proper installation and functionality of all facilities, to confirm that they perform as specified and to accomplish the transition to a routine operation.

Global Lifecycle Operations Leader – The global lifecycle operations leader manages the global team of product experts that provide direct support to SUEZ's installed equipment base of Ultrafiltration plants. The leader deals with post capital sale customer warranty management, client technical support, R&D, process support and upgrade project management.

Regional Lifecycle Manager – The regional lifecycle manager provides product support for the lifecycle of the plant, and provides a single point of contact to provide assistance with technical support, product upgrades and insight Process Support. The Regional Lifecycle Manager will visit the facility during scheduled service visits and support plant audits. Any additional operator training and spare parts can be coordinated with the regional lifecycle manager.

SUEZ's Center of Excellence in Oakville Ontario, Canada, is the focal point of SUEZ's ultrafiltration membrane research and development. The SUEZ UF Membrane division employs over 1,400 people worldwide with 850 staff employed in North America. As a result, SUEZ has a very large pool of resources from which new team members can be selected should a team member no longer be available.

The **Caesars Lane MBR** team members' resumes are available on request.

2.f Number and Location of Staff, Representatives, and Offices

The following table summarizes the main SUEZ Water Technologies & Solutions (WTS) North American locations related to the design, delivery, and service support of ZeeWeed membrane treatment systems. Three key locations with respect to the **Caesars Lane MBR** project should be noted:

- **Oakville, Ontario, Canada** – Head office location for ZeeWeed-related piloting, product management, design, project management, commissioning, and after-market service.
- **Guelph, ON** – Manufacturing and assembly facility for process equipment
- **Trevose, PA** – SUEZ Water & Technologies Service world headquarters – sales, engineering, service
- **Oroszlány, Hungary** – Manufacturing facility for ZeeWeed membranes.

Location	Function	Number of Staff
Trevose, PA	SUEZ Water & Process Technologies world headquarters – sales, engineering, service	331
Richmond, VA	Sales, Engineering, Services, Technical/Process Support	150
Norfolk, VA	Mobile water logistics center – sales, engineering, service	101
Oakville, ON	UF/MBR Centre of Excellence – R&D, product management, sales, project design, project management, commissioning, post-commissioning service	420
Oroszlány, Hungary	Membrane manufacturing	660
Edmonton, AB	Service	30
Guelph, ON	Sales, engineering, fabrication, service	130
Minnetonka, MN	Sales, engineering, service	485
Vista & Southern California	Service/technical support/process support/sales	106
Baytown, TX	Sales, service	42
Bellevue, WA	Sales, Engineering, Services	80

The SUEZ WTS office located in Oakville, Ontario is the Global UF/MBR Centre of Excellence and North American membrane design headquarters. The Oakville office employs approximately 420 staff, and is focused on developing, designing, and supporting water and wastewater treatment solutions using leading-edge membrane technologies. The Oakville facility is the focal point for SUEZ's expertise with membrane-based treatment systems, including:

- Product research and development
- Sales and applications engineering
- Water and Wastewater process engineering

- ❑ Project execution, including project engineering, project management, and commissioning services
- ❑ Long Term Post-commissioning field service support

All technical design and engineering for the Caesars Lane MBR project will be directed out of the Oakville Ontario Center of Excellence.

2.f.1 Local Presence

SUEZ is fully committed to providing service and support to our facilities in New York State. We can provide **same day in-person technical support** for the few issues that can't be handled remotely by our 24/7 remote support specialists, with trained field service representatives based out of either our UF-MBR Center of Excellence, or the multiple satellite office locales providing regional coverage across the United States.

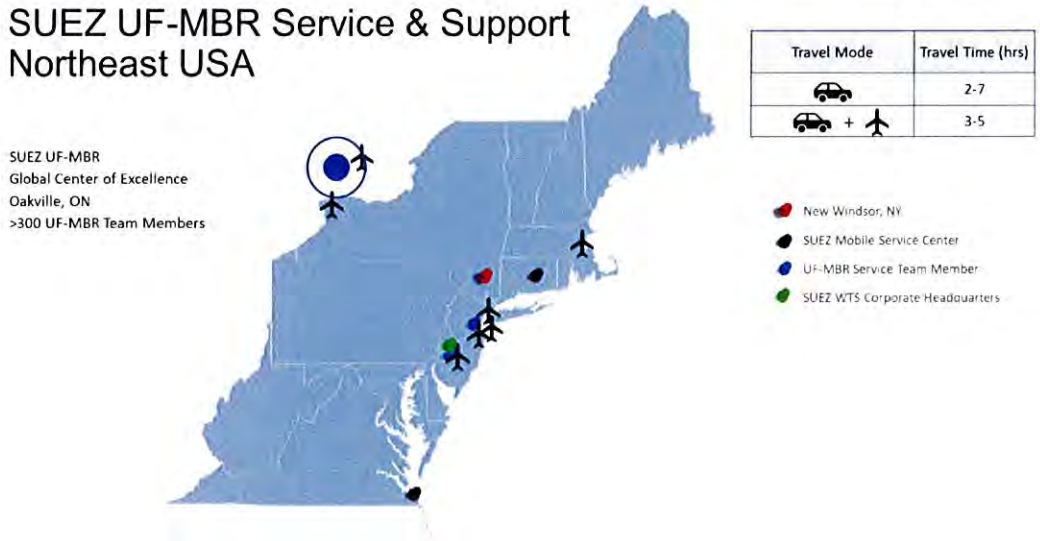

Travel to the site can occur by car or plane in less than 7 hours from Oakville. Alternatively, we have UF-MBR service team members located in NJ and PA that can drive in less than 2.5 hours. When it comes to meeting your after-market service requirements, SUEZ has the resource depth needed:

- Technical Support staff for 24/7 Emergency Telephone Support
- System Controls staff and Process Support engineers and technicians
- Local Field Service Representatives
- Pre- or post-commissioning training staff
- Spare Parts personnel
- Warranty Support and Service Planning specialists
- Regional Lifecycle Managers

As part of this local presence, SUEZ maintains inventory of replacement membrane modules at our Oakville, Ontario Center of Excellence for single, or small quantity

membrane replacements. Typical lead times subject to EPA clearance are typically 2-3 days.

2.f.2 Local Contacts

SUEZ Trevose Headquarters
Sales, Engineering, Services
No. of Employees = 331

Gilberto Perkins – Lifecycle Services
Ph. 425 828 2400 x1458
E-mail: *Gilberto.Perkins@suez.com*

Matt Stapleford – Regional Lifecycle Manager
Ph: 905 334-4035
E-mail : *mathew.stapleford@suez.com*

Graham Best, P.E. – Regional Manager
Ph: 905 330-0881
E-mail: *graham.best@suez.com*

Dan Kelly – Process Analyst
Ph: 760 685 8562
E-mail: *Dan.Kelly1@suez.com*

Kirt Perry – Customer Service Manager
Ph: 805 440 0712
E-mail: *Kirt.Perry@suez.com*

2.f.3 Local Representation

In New York State, SUEZ is represented locally by Sherwood-Logan & Associates, a manufacturer's representative for municipal water and wastewater treatment.

Sherwood-Logan has served New York's engineering and municipal community as a leading manufacturer's representative since 1980. Sherwood-Logan's 40 years in the water and wastewater business provides expertise in all aspects of the engineering process, regulatory requirements, equipment design and manufacturing, startup, training and operations as well as aftermarket parts and service capabilities.

James Konatsotis, Sales Representative will be the Sherwood-Logan & Associates contact for the **Caesars Lane MBR** project.

Sherwood-Logan & Associates, 379 Danbury Rd, Wilton CT 06897

Ph: (203) 210-7180

jkonatsotis@sherwoodlogan.com

2.g Compliance Statement

Town Of New Windsor, Orange County, New York
Caesars Lane Wastewater Treatment Facility (WTF) MBR System Pre-Selection

Bidder has reviewed the Caesars Lane Wastewater Treatment Facility (WTF) MBR System Pre-Selection Specifications (Job # 18-732; 13 May 2022; and Addendum #1 dated June 29, 2022; and Addendum #2 dated July 18, 2022). SUEZ believes our proposal meets or exceeds the specifications technically. Commercially, SUEZ provides the following clarifications, and Appendix E - Supplementary Conditions of the Procurement Contract amending or supplementing EJCDC® P-700.

1. ***Agreement Between Buyer and Seller for Procurement Contract: Article 2 – Procurement Contract Times***
   SC-2.04.C: Please replace paragraph 2.04.C in its entirety with the following:
   The liquidated damages set forth in this Article shall constitute the Buyer's sole and exclusive remedy for delay by Seller in achieving completion of the Work within the time specified in the Procurement Contract. Seller's obligation to pay liquidated damages pursuant to this Article shall be limited to an amount equal to ten percent (10%) of the Seller's Contract Price.

2.h Acknowledgement of American Iron and Steel (AIS) Requirements

May 31, 2022

Town of New Windsor

555 Union Avenue

New Windsor, NY 12555

Ref : Caesars Lane WWTP MBR System Pre-Selection

I, David Bingham, Commercial Director for Zenon Environmental Corporation, certify that the equipment to be provided to the subject project are in full compliance with the American Iron and Steel requirement as mandated in EPA's State Revolving Fund Programs.

As per the following excerpt from a Memorandum from the USEPA Dated March 20, 2014 where in it is stated that "membrane bioreactor systems" and "membrane filtration systems" are not considered construction materials and therefore are not subject to AIS requirements.

"Mechanical and electrical components, equipment and systems are not considered construction materials. Mechanical equipment is typically that which has motorized parts and/or is powered by a motor. Electrical equipment is typically any machine powered by electricity and includes components that are part of the electrical distribution system."

"The following examples (including` their appurtenances necessary for their intended use and operation) are NOT considered construction materials: pumps, motors, gear reducers, drives (including variable frequency drives (VFDs)), electric/pneumatic/manual accessories used to operate valves (such as electric valve actuators), mixers, gates, motorized screens (such as traveling screens), blowers/aeration equipment, compressors, meters, sensors, controls and switches, supervisory control and data acquisition (SCADA), membrane bioreactor systems, membrane filtration systems, filters, clarifiers and clarifier mechanisms, rakes, grinders, disinfection systems, presses (including belt presses), conveyors, cranes, HVAC (excluding ductwork), water heaters, heat exchangers, generators, cabinetry and housings (such as electrical boxes/enclosures), lighting fixtures, electrical conduit, emergency life systems, metal office furniture, shelving, laboratory equipment, analytical instrumentation, and dewatering equipment."

Based on the above the scope of equipment and products being provided for this project consist of the Membrane Bioreactor and associated ancillaries.

If any of the above compliance statements change while providing these products to this project we will notify the prime contractor and the engineer as soon as it becomes known.

David Bingham
Commercial Director
SUEZ WTS Systems USA, Inc.

3 Design Submittals

3.a Scope of Supply

3.a.1 Basis of Design

The proposed ZeeWeed membrane ultrafiltration system for the **Caesars Lane MBR** is offered based on the design parameters provided in the Preselection Documents and as summarized in the following sections.

3.a.1.1 Influent Flow Data

The influent design flows were based on Section 455000, Item 2.1.B.2, and are summarized in the table below.

Parameter	Value	Unit
Average day flow (ADF)	5.0	mgd
Maximum month flow (MMF)	8.0	mgd
Maximum day flow (MDF)	11.0	mgd
Peak hour flow (PHF)	16.5	mgd
Maximum flow with one train offline for maintenance or cleaning (for less than 24 hours)	11.0	mgd
Maximum flow with one train offline for maintenance or cleaning (for less than 7 days)	8.0	mgd

Note: Any flow conditions that exceed the above-noted flow limits must be equalized prior to treatment in the ZeeWeed membrane bioreactor system.

- ADF – the average flow rate occurring over a 24-hour period based on annual flow rate data.
- MMF – the average flow rate occurring over a 24-hour period during the 30-day period with the highest flow based on annual flow rate data.
- MDF – the maximum flow rate averaged over a 24-hour period occurring within annual flow rate data.
- PHF – the instantaneous flow rate averaged over a 2-hour period occurring within annual flow rate data.

SUEZ notes that the membrane design provided will allow for operation of the facility at two separate N-1 flow conditions:

Condition 1: Maximum Day Flow (11.0 MGD) Operation for up to 24 hours with one train offline for maintenance or cleaning.

Condition 2: Maximum Month Flow (8.0 MGD) Operation for up to 7 days with one train offline for maintenance or cleaning.

3.a.1.2 Influent Quality

The design solution proposed is based on the wastewater characteristics provided in Section 455000, Item 2.1.B.3, and as detailed in the following table.

Parameter	Value	Unit
Design influent temperature	10	°C
BOD_5	98	mg/L
TSS	74	mg/L
NH_3-N	18	mg/L
TKN	27	mg/L
TP	6.0	mg/L
Alkalinity	225	mg/L as $CaCO_3$

3.a.1.3 Effluent Quality

The following performance parameters are expected upon equipment startup and once the biological system has stabilized. These are consistent with the effluent quality specified in Section 455000, Item 2.1.A, and Addendum No. 1, Item 6.

Parameter	Value	Unit
BOD_5	≤ 5.0 (monthly average)	mg/L
NH_3-N	≤ 1.8 (Oct 1st – May 31st) ≤ 1.2 (Jun 1st – Sep 30th)	mg/L
TSS	≤ 5.0 (monthly average)	mg/L
Turbidity	≤ 1.0	NTU

3.a.1.4 Biological System Design

Overview

For the **Caesars Lane MBR** project, the screened influent wastewater enters the anoxic tanks for alkalinity recovery through partial denitrification. Mixed liquor will then be transferred to aerobic TREA treatment, where BOD is oxidized and most of NH3-N is converted into NO3-N. Finally, the mixed liquor enters the membrane tanks by gravity, where biomass is separated from the mixed liquor by the ZeeWeed 500 membranes. The flow sheet is shown on the following page.

The water level difference between the membrane tank and the chlorination/de-chlorination tank is approximately 22 feet. A siphon design will be used to utilize the water level difference for permeation to minimize equipment requirements, optimize building space, and maximize energy savings. Permeate will flow through the membranes by gravity to the existing chlorination/de-chlorination processes.

Waste sludge is diverted from the RAS line to the sludge holding tank (by Others). The frequency of wasting is a function of influent characteristics, reactor design and operation, and operator preferences.

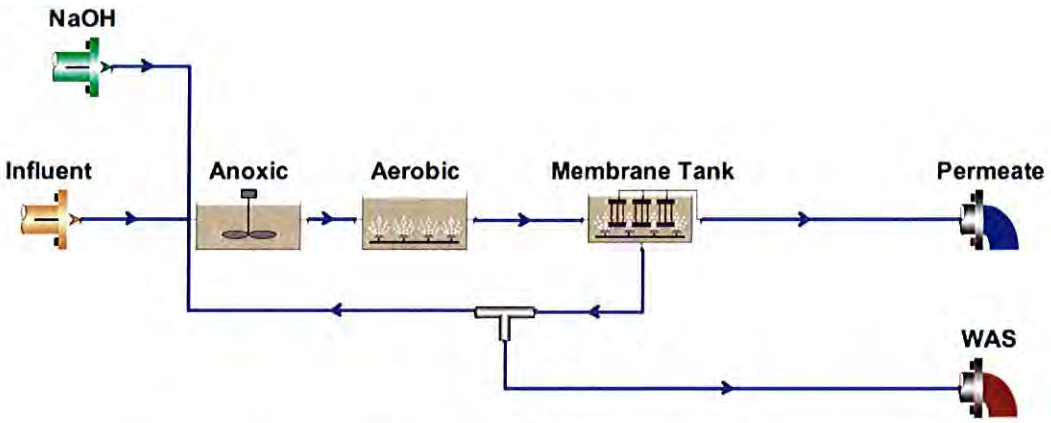

The proposed modified Ludzack-Ettinger (MLE) biological system design consisting of anoxic and aerobic zones is as follows.

Design Parameter	Value	Units
Flow basis for biological design	8.0	mgd
Number of biological trains	3	
Anoxic working volume, total / per train	330,000 / 110,000	gal
Aerobic working volume (excluding membranes), total / per train	700,000 / 233,333	gal
Design aerobic SRT (including membrane tank volume)	13.0	days
Estimated waste sludge flow rate at 10,625 mg/L	50,500	gpd
Design MLSS concentration in bioreactor	8,500	mg/L
Design liquid depth in aerobic zone	17.5	ft

Notes:

1) Tank volumes are preliminary only and may change once final detail design commences.
2) The biological system is designed for installation within concrete tanks supplied by buyer.

Fine Screening

Details on SUEZ's requirements for fine screening are provided in Section 3.j of this proposal.

Reactor Sizing and Hydraulics

An influent flow splitter (by others) is proposed to evenly distribute screened effluent and RAS to each of three (3) equally sized bioreactors. The reactors are hydraulically sized for the peak hour flow (16.5 MGD) with all of the basins in service. Refer to the GA Drawing of the Bioreactors in Section 3.c. Primary reactor water levels in each zone are indicated on the GA Drawing and can be adjusted during detailed design. SUEZ has assumed a total bioreactor depth of 21.0 ft. This depth can be adjusted during detailed design to suit specific site requirements including any anticipated rock interference.

In general, flow will occur diagonally across each zone through partially submerged openings. A cascade from the anoxic to aerobic zone is anticipated to direct foam toward the end of the bioreactor and to separate reactor biological function.

Influent and effluent downward opening sluice gates are anticipated as shown on the GA drawing. Drain valves for each reactor have not been shown.

Mixed Liquor Concentration (MLSS)

SUEZ typically designs their MBR systems for a MLSS concentration of 8 and 10 g/L in the bioreactor and membrane tanks, respectively to ensure the overall energy consumption of the biological treatment system is optimized (see below recent research about dependencies of alpha factors on MLSS in the bioreactor).

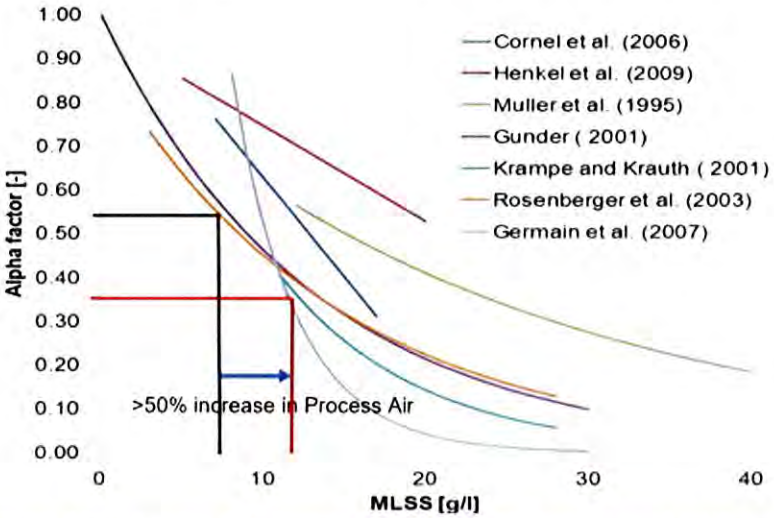

Figure: Alpha Factor at Different MLSS Concentrations Based on Various Research Results

However, many of our existing and potential clients encounter circumstances like footprint or soil loading limitations, concrete cost, sludge handling and removal, or RAS pumping restrictions that require them to operate the plant temporarily, or permanently, at higher MLSS concentrations in the bioreactor and/or in the membrane basins. Although based on unique drivers, the following references are all operating at elevated MLSS concentrations in the membrane tanks.

To demonstrate that the ZeeWeed 500D membranes are able to withstand higher MLSS concentrations without compromising performance, we have identified five full scale MBR facilities that have operated at high MLSS concentrations and have correlated the MLSS data to the transmembrane pressure as an indicator of membrane performance and reliability.

The following figures show that MLSS concentrations up to 20 g/L have limited-to-no impact on TMP/membrane performance as long as the membranes are operated with the recommended air scour and relaxation scheme.

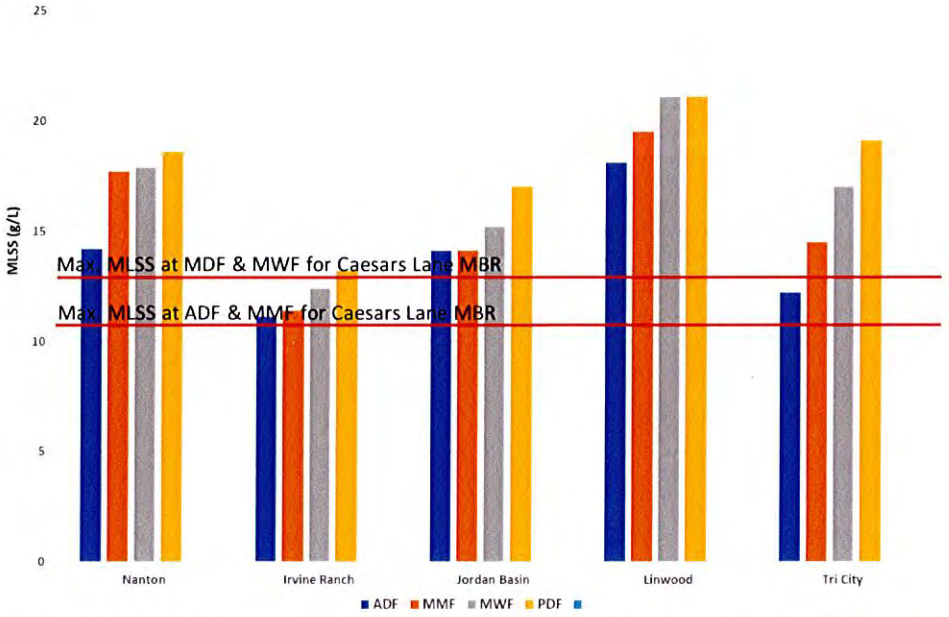

Figure: Historical Operating MLSS in the RAS from the Membrane Basins for Five Full Scale MBRs Compared to the Proposed Caesars Lane MBR Operating MLSS Concentrations

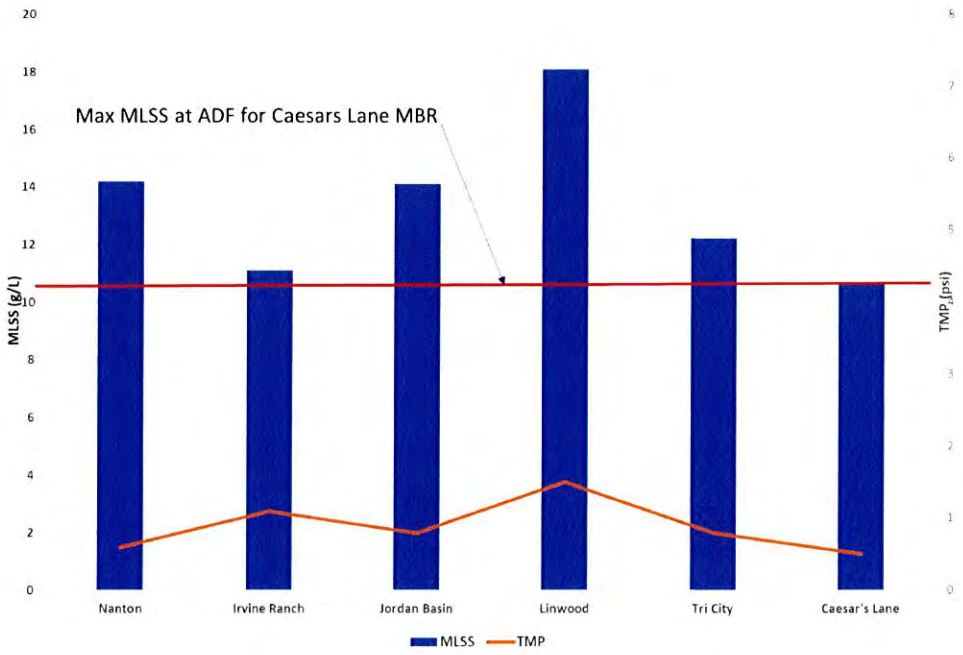

Figure: Operating TMP for Five Full Scale MBRs at Elevated MLSS Concentrations Compared to the Caesars Lane MBR Proposed TMP at ADF

As presented in the previous figures, plants like Linwood (siphon-operated MBR), Nanton (LEAPmbr), and Jordan Basin (MBR) have been routinely operated at MLSS concentrations from 14 to over 20 g/L at TMPs below 2 psi. The performance of the membranes was not compromised in any of these cases.

For this project, SUEZ has proposed a maximum MLSS concentration of 8.5 g/L in the bioreactors; resulting in membrane tank MLSS concentrations as shown below at the following flow conditions:

Parameter	Membrane Tank Concentration	Units
Average Day Flow (ADF)	10,625	mg/L
Maximum Month Flow (MMF)	10,625	mg/L
Maximum Day Flow (MDF)	12,750	mg/L
Peak Hour Flow (PHF)	12,750	mg/L

This approach is consistent with SUEZ's membrane design guidelines that consider two design criteria for MBR sizing:

Net Hydraulic Flux: The net volume of permeate produced over a period of time (e.g., one day) divided by the membrane surface area. The units for flux are gfd (US gallons/ft^2/d) or lmh (L/m^2/h))

Solids Mass Flux (SMF): The amount of solids that are brought to the membrane surface during filtration. SMF combines the effects of the hydraulic flux and the MLSS concentration in the membrane tank. SMF is calculated by multiplying the net hydraulic flux by the MLSS in the membrane tank (g/L). The units for SMF are g/m^2/h

The proposed net hydraulic flux and SMF values proposed for the Caesars Lane MBR are less than SUEZ's design guidelines, and well below the design maximum MLSS concentration of 15 g/L for the ZW500 membrane.

SUEZ's proposed minor increase in maximum MLSS concentration is compliant with Addendum No. 1., "Bidder may propose MLSS concentrations that are consistent with WEF Manual of Practice No. 36, 2011, so long as at least three years of operating data at the consistent and sustained higher than 8,000 mg/L are provided."

In addition to the reference facilities provided above, which consistently operate their bioreactor at MLSS concentrations ≥ 8.5 g/L, two additional facilities listed in the Bid Form References also operate their bioreactors at average MLSS concentrations ≥ 8.5 g/L. – Broad Run WRF, VA (9.84 g/L) and Linwood WRF, GA (10.85 g/L).

SUEZ notes that WEF Manual of Practice No. 36 includes the following wording:

Article 3.2.4, P.8: "Typically, high MLSS concentrations decrease the transfer efficiency of aeration systems, …"

Table 3.2: Typical MLSS in Activated Sludge Basins: 4,000 to 10,000 mg/L (activated sludge basins).

As such, SUEZ recommends that any MBR system proposed with bioreactor MLSS concentrations greater than 10 g/L be rejected, or re-evaluated at 10 g/L.

SUEZ is confident the ZW500 membrane system proposed for Caesars Lane will operate reliably at the proposed MLSS concentration. This is substantiated with existing plant performance data and backed by the proposed 15 years membrane warranty.

Anoxic Tank Design and Mixing

SUEZ has sized the anoxic zones based on a minimum HRT of one (1) hour at the design flow condition of 8.0 MGD, as specified in Section 455000, Item 2.1.B.5.c.1. This volume will provide partial de-nitrification, maximize alkalinity recovery and minimize the requirement for NaOH addition. A smaller anoxic volume is proposed as an alternative for consideration in Section 10 – Value Engineering for consideration.

For the specified influent alkalinity of 225 mg/L (Section 45000, Item 2.1.B.3.h), alkalinity supplementation will not be required. However, for lower influent alkalinities, supplemental alkalinity will be required to maintain a minimum soluble alkalinity in the bioreactors of 50 mg/L for nitrification and biomass stability.

SUEZ has included a NaOH dosing system in our scope of supply and in the process building layout to allow for potentially lower influent wastewater alkalinity.



Typical submersible mixer in the anoxic tank

Each anoxic zone is mechanically mixed to maintain solids in suspension within each reactor. The proposed mixers are submersible, propeller type with guide rails, brackets, and removal cables. One (1) lifting davit and mounting brackets have been included to allow for removal and servicing of the mixers if required.

Aerobic Tank Design and Equipment

Each aeration tank will be equipped with fine bubble diffusers. The diffusers and process blowers have been selected to provide dissolved oxygen as specified in Section 455000, i.e., ≥ 2.0 mg/L at maximum month flow and ≥ 1.0 mg/L at maximum day flow. If desired, during detailed design, …

Each bioreactor will be equipped with pH and DO probes with a common transmitter, and level switch high, as specified.

Process Blowers

SUEZ has proposed three (3) process blowers, two(2) duty + one (1) standby unit. The blowers will be Aerzen Delta Blowers equipped with sound enclosures and winterization packages for outdoor installation as shown on the GA drawing. This approach reduces the size of the process building, eliminates unnecessary heat load, and has been utilized at numerous facilities in cold, winter environments such as in London, Ontario.



Oxford Street MBR, London, ON, Canada

Effluent Collection and Scum Management

Nitrified effluent from each aerobic zone will flow into a common effluent collection and membrane distribution channel as shown on the GA drawings. This channel distributes the effluent to each membrane train.

A scum box, with downward opening slide gate at the end of the channel is proposed for scum removal. Typically, the scum system consists of duty/standby submersible pumps

and level control. This equipment is not included in SUEZ's scope of supply but can be added as required. SUEZ has allocated design and engineering costs, as well as control and programming hours in our offer for control of the scum box equipment.

RAS Collection and Pumping

SUEZ has proposed dedicated, end-suction centrifugal RAS pumps that will draw RAS from each membrane train and discharge it to a common RAS collector located above the pumps. For consideration, axial flow RAS pumps, and/or relocation of the RAS collector to below the equipment room may be considered. Refer to Section 10 – Value Engineering. This collector will be located above the RAS pumps in the process building and be routed to the influent splitter box, ensuring a homogenous distribution of solids between the biological process trains.

Utilizing dedicated RAS pumps per train ensures that equal RAS splitting occurs. Each RAS pump will be equipped with a VFD and flow meter to allow the RAS rate to be adjusted as required.

Facilities with poor RAS distribution can be problematic. This is particularly common at plants using RAS effluent collection channels with fixed, or manually adjusted effluent overflow weirs. These weirs can contribute to poor solids distribution across the membrane trains resulting in poor membrane performance.

3.a.1.5 Ultrafiltration System Design

Overview of ZeeWeed membrane system

The proposed ZeeWeed Membrane filtration system for the Caesars Lane MBR is designed to ensure reliable long-term performance and to maximize operational flexibility. At the core of the MBR process is the ZeeWeed 500 series hollow fiber membrane. The ZeeWeed 500 series membrane is a reinforced hollow fiber ultrafiltration membrane that was designed specifically for high solids applications. The membrane fiber has a nominal pore size of 0.04 mm, a tensile strength of 100 lbs and is highly resistant to chemicals, including acids, bases and chlorine, allowing for flexible cleaning regimes.

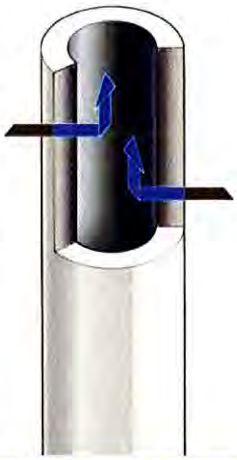

The ZeeWeed 500 series membrane is a reinforced hollow fiber ultrafiltration membrane with a nominal pore size of 0.04 µm.

The membrane is manufactured and assembled into discrete units called "modules" or small membrane subunits. These are the basic building blocks of the membrane system that are manifolded together to create a "cassette" or large membrane subunits. The ZeeWeed 500 cassette proposed for the Caesars Lane MBR, will contain 64 modules. Each module has 530 ft^2 of membrane area, for a total available installed membrane area of 33,920 ft^2 per ZeeWeed 500 cassette.

In the ZeeWeed membrane filtration process, the membrane cassettes are immersed directly in the mixed liquor in separate membrane compartments. A series of cassettes connected to a common permeate header is called a "membrane train". Mixed liquor flows into the membrane basins and flows by gravity by the natural hydraulic profile at the WRF to create a siphon and draw treated water through the hollow fiber membranes, leaving the mixed liquor solids on the outside of the membrane.

Dedicated RAS pumps are used to recirculate mixed liquor back to the head of the bioreactor where it is blended with the screened primary effluent. To take advantage of the increased mixed liquor solids concentration, wasted activated sludge is taken from the RAS piping.

LEAPmbr aeration

LEAPmbr aeration is a specially designed and highly efficient aeration system used to scour the outside surface of the membranes and move mixed liquor solids away from the membrane fibers. The patented LEAPmbr aeration system uses factory-installed LEAP aerators which are integrated into the base of each ZeeWeed 500 cassette simplifying installation.



ZeeWeed 500 Membrane Cassette

LEAPmbr aeration devices release large air bubbles which create higher scouring forces along the surface of the membrane fiber and therefore have more effective solid removal capability than smaller bubbles. Because the large mushroom-cap bubbles generated by LEAPmbr aeration devices are so effective, less air is required to achieve the same solids removal performance.

With LEAPmbr, aeration to the train is either on (during production) or off (during stand-by). There are no cyclic valves required and only one air connection per train is required. When a train is in operation, air is continuously supplied to the cassette aeration device from the membrane train aeration header. When sufficient air volume has built up in the aeration device to overcome the static head above it, the air releases through the multi-stage coarse-bubble diffuser built into the aeration device.



ZeeWeed 500 LEAPmbr Membrane Trains (Riverside, CA – 26 MGD)

Membrane system configuration

The proposed ZeeWeed membrane filtration system for Caesars Lane MBR has four essentially identical membrane trains with six cassette spaces and six cassettes installed. The membrane system is designed to process maximum day flows with only three trains in operation. The following table summarizes the configuration and design flux data for the proposed membrane filtration system.

The trains are arranged in pairs of two with mirrored permeate and air headers to allow installation of the headers on the exterior tank walls and improve operator access.

Parameter	Value
Number of membrane trains	4
Number of cassette spaces per train	6
Number of cassettes installed per train	6
Type of cassette	64
Type of module	ZW500-530
Module design per train	5 x 64 + 1 x 32
Total number of modules installed per train	352
Total number of modules installed per plant	1,408
Total number of cassettes installed per plant	24
Spare space (%)	8.3
Membrane tank internal dimensions (L x W x H) (ft)	40 x 8 x 13
Membrane design flux rates (gfd)	Please see Bid Worksheets in Section 6 of this proposal

Notes:

1) Tank dimensions and volumes are preliminary only and may change slightly once final detail design commences.
2) The ultrafiltration system is designed for installation within concrete tanks supplied by buyer.

Membrane Trains in Operation

For ADF flows, three trains only three trains are required to be in operation. The system will be able to operate at LEAP-Lo in relaxation mode, i.e., without backpulsing.

As the flow increases above ADF, the standby train will automatically come on-line to treat the increased capacity. The aeration system will automatically adapt to LEAP-Hi as required by the flow or TMP. This aeration strategy allows operation of the optimal number of membrane trains at their optimum energy efficiency point without compromising performance.

Details of membrane operation and cleaning is provided in Section 3i.

Membrane Tanks

SUEZ recommends that the membrane tanks are covered to prevent the re-introduction of blown or dropped debris downstream of the fine screens. While aluminum covers are typically used, opening grating with rollout mats has also been successfully applied. These covers also provide access for membrane access and periodic removal if required.

In response to Addendum No. 1, Item 5, SUEZ confirms that a membrane tank coating is not required to allow a 30-year life span for the concrete tanks. The chemical exposure associated with chemical recovery cleaning is limited to 2 times per year at low concentration (NaOCl – 1 g/L, citric acid – 2 g/L for less than 8 hours per clean. Maintenance cleaning is conducted with the membrane tanks full of activated sludge and as such has no impact on the concrete as the cleaning chemicals do not directly contact the tank surfaces.

While some SUEZ membrane tanks have been coated, coatings have in some instances been problematic with peeling and coating failure reported at several facilities. Many facilities such as Oxford WRF in London, ON and Brush Creek WRF in Cranberry Township, PA have uncoated membrane tanks. Oxford has been in operation for more than13 years and has not experienced any adverse impact on their concrete membrane tanks.

Membrane Tank Piping and Cassette Isolation

SUEZ permeate piping is typically Sch 10s, 316L stainless steel. Air header piping is Sch. 80 CPVC. All cassettes are typically provided with butterfly valves with hand levers for isolation of the permeate and air headers. Refer to the SUEZ P&ID drawings in Section 3.e.

The permeate and air headers are reasonably simple to fabricate and install; compared to more complex plate and frame membrane systems. Both the permeate and air piping each require a single point connection to each cassette using Straub-style connectors. As per Addendums No. 1 and No. 2, in-basin valves and piping have not been included in SUEZ proposed scope.

3.a.1.6 Siphon Design

A total water level differential of 21.0 feet between the membrane tanks and the chlorination/de-chlorination tank (based on the hydraulic profile provided in RFQ. Please see Appendix D – Hydraulic Profile Markup) is available at the **Caesars Lane MBR** site. This driving head is large enough to allow a maximum transmembrane pressure of 7.2 psi (16.6 ft) assuming approximately 5 ft of piping and valve losses. The available head will allow the system to use a full siphon (gravity) over the range of plant flows. With a siphon design, there will be no process (permeate) pumps, and the overall plant power requirement will be reduced.

SUEZ's Experience with Siphon Designs

SUEZ has the proven knowledge, experience and capability to make siphon design projects a success. While every site is different; for **Caesars Lane MBR**, there is a sufficient difference in the water level from the membrane tank to the point of discharge such that a full siphon design can be implemented; allowing the water to be filtered without the use of any permeate pumps. Alternatively, if less head is available, a partial siphon may be utilized. Refer to Section 10 – Value Engineering.

SUEZ's experience designing and executing municipal water and wastewater plants with full or partial siphon is provided in the table below with the oldest facilities in operation for 19 years:

Project Name & Location	ADF Capacity (mgd)	Type of Siphon	Type of Plant	Year Commissioned
Chestnut, Singapore	72	Full	DW	2003
Manatee County, FL	50	Partial	DW	2020
CCK, Singapore	48	Partial	DW	2008
Nanaimo, British Columbia	30	Full	DW	2015
Bray Park, Australia	26	Partial	DW	2007
Park Cities WTP, Dallas, TX	24	Full	DW	2012
Mid-Dakota RWS, Pierre, SD	13.5	Partial	DW	2010

Sudbury, Ontario	10	Full	DW	2004
Cranberry Township, PA	7.2	Full	WW (MBR)	2018
Borghetto Santo Spirito, Italy	7.1	Partial	WW (MBR)	2012
Pendleton, OR	6	Full	DW	2003
Linwood, Gainesville, GA	4.6	Full	WW (MBR)	2007
Saugeen Shores, Ontario	4	Partial	DW	2006
Buxton, UK	2.4	Full	WW (MBR)	2004
Noci, Italy	1.3	Partial	WW (MBR)	2009

Using siphon for permeate extraction will reduce capital, operating and labor costs, while providing several additional less-obvious benefits listed below.

Additional Reliability

Power interruptions are obviously a concern for any WWTP. Power interruptions can impact equipment and operation, and backup generators need to be able to support plant operation for critical equipment. With a siphon design, the plant can be configured to produce water during a power outage, as power required for operating the pneumatic flow control valves is minimal.

Quiet Operation

The incorporation of a siphon design provides a quieter plant as the operational noise from the permeate pumps is eliminated.

Siphon is Green!

Utilization of a siphon for wastewater treatment is consistent with the Town of New Windsor's priorities related to energy efficiency and conservation; particularly recognizing the cost of power at the facility.

Installation and Construction Unique to Siphon Design

V-Port Ball Valves

The design for siphon operation requires a flow control valve instead of a permeate pump per train. SUEZ has included high performance flow control valves for this application to provide exceptional flow control over the full range of operating conditions; particularly during low flow conditions.



DeZurik V-Port Ball Valve

Backpulsing and Backpulse Pumps

While backpulsing is not required for normal operation, SUEZ has provided a system with backpulse capability. This will ensure the MBR system can operate reliably during extreme conditions including poor mixed liquor filterability or biological system deterioration. To provide for this, a set of submersible backpulse pumps (duty and installed standby) has been provided for periodic backpulsing and cleaning purposes. These pumps are proposed to be installed in the existing chlorination/dechlorination tank onsite. These pumps and their associated valves and VFD's are included in SUEZ's scope of supply. SUEZ has assumed the existing tank would remain uncovered and has included a small basket strainer (located

at the process building) to protect the membranes from debris. If the tank were to be covered, the strainer can be eliminated.

SUEZ notes that a separate backpulse tank is not required, for either the siphon design, or alternatively for a permeate pump design. For the pumped alternative, the combined permeate header will have sufficient volume to provide filtrate for backpulsing and chemical cleaning.

Sample Pumps

As the permeate header will be under vacuum created by the siphon, small sample pumps are provided per train for each turbidimeter.

3.a.1.7 Process Building

The proposed process building layout is provided in Section 3.c. This layout has been optimized to include appropriate space for the RAS pumps, compressors, and chemical storage, as well as the electrical equipment. A separate electrical room has been shown consistent with applicable codes and good engineering practice.

SUEZ has proposed the use of IBC mother-daughter chemical storage systems for each membrane cleaning and process chemical. The IBC totes are available in either 275 or 330 US gallon sizes and can be readily switched without interrupting chemical dosing. Use of IBC totes ensures fresh chemical is available for use and eliminates expensive intermediate bulk deliveries.

SUEZ has confirmed that a one mother-daughter tote will provide a one-month supply of chemical storage. Separate containment areas have been shown and will provide 150% of the container/tank volume as specified.



IBC Chemical Tote

3.a.2 Scope of Supply by SUEZ

The following sections should be read in conjunction with the P&ID drawings provided. In case of conflict, the P&ID drawings take precedence for SUEZ supplied equipment and devices.

Quantity	Description
Membrane Blower & Associated Equipment – DS-002 Sheet 1 of 2	
4+1	Inlet filters and silencers
4+1	PD membrane blowers (*Aerzen, 60 HP*)
4+1	Sound enclosures with space heaters
2	Wall-mounted PD Blower VFDs: Note: three (3) motor starters for remaining blowers by Others
4+1	Discharge silencers
4+1	Discharge pressure relief valves
4+1	Discharge pressure indicators c/w isolation valves
4+1	Discharge check valves
4+1	Discharge flexible connectors with clamps
4+1	Blower discharge low flow switches

Quantity	Description
4+1	Membrane blower isolation valves
Process Blower & Associated Equipment – DS-002 Sheet 2 of 2	
2+1	Inlet filters and silencers
2+1	PD membrane blowers (*Aerzen, 125 HP*)
2+1	Sound enclosures with space heaters
2+1	Wall-mounted PD Blower VFDs
2+1	Discharge silencers
2+1	Discharge pressure relief valves
2+1	Discharge pressure indicators c/w isolation valves
2+1	Discharge check valves
2+1	Discharge flexible connectors with clamps
2+1	Blower discharge low flow switches
2+1	Membrane blower isolation valves
Biological Equipment – DS-003	
3	Anoxic tank submersible mixers (*Sulzer, 8.0 HP*) and associated installation rail guides and brackets
3 grids	Fine-bubble diffuser grids for process aerobic tanks, with associated downcomers
3	Manual air isolation valves
3	Aerobic tank level switches
3	Biological tank controllers (Hach or E+H, each with associated one (1) pH sensor and one (1) DO sensor)
MBR ZeeWeed Membrane & Associated Equipment – DS-004	
1 lot	Membrane cassette installation assemblies for concrete membrane tanks
24	ZeeWeed 500 64-module membrane cassettes (*SUEZ*)
1,408	ZeeWeed 500 530 ft^2 membrane modules (*SUEZ*)
8	Membrane tank level switches
4	Membrane tank level transmitters (*E+H*)
4	Pressure transmitters (*E+H*)
4	Ejector assemblies (*Piab*)
1	Level transmitter (*E+H*) for membrane tank distribution channel
Permeate Siphon & Associated Equipment – DS-005	
4	Suction side isolation valves
4	Backpulse isolation valves
4	Suction side ball valves
4	Permeate electro-magnetic flow meter (*E+H*)
4	Suction side pressure gauge and associated ball valve
4	V-Port modulating valve (*DeZurik*)
4	Discharge side pressure gauge and associated ball valve
4	Drain valves
4	Discharge side permeate isolation valves

Quantity	Description
4	Sampling pumps
4	Turbidity transmitters with associated valves and degassing columns
Backpulse System – DS-006	
1+1	Submersible backpulse pumps, and associated installation rail guides and brackets (*Sulzer, 57.6 HP*)
1+1	Wall-mounted backpulse pump VFDs
1+1	Check valves
1+1	Isolation valves
1	Level transmitter (*E+H*)
1	Temperature transmitter (*E+H*) on the common permeate discharge line
1	Pressure gauge and associated valve
1	Electro-magnetic flow meter (*E+H*)
1	Backpulse pump discharge side isolation valve
1+1	Pressure switches - high
1	Basket strainer
1	Sodium hypochlorite dosing isolation valve
1	Sodium hypochlorite dosing check valve
1	Sodium hypochlorite dosing automatic valve
1	Citric acid dosing isolation valve
1	Citric acid dosing check valve
1	Citric acid dosing automatic valve
RAS/WAS/Drain Pump & Associated Equipment – DS-010	
4	RAS/WAS/drain pump suction pressure gauges w/hand isolation valves
4	RAS/WAS/drain pump suction drain valves
4	Centrifugal RAS/WAS/drain pumps (*Sulzer 40 HP*)
4	Wall-mounted RAS/WAS/drain pump VFDs
4	RAS/WAS/drain pump discharge pressure gauges w/hand isolation valves
4	RAS/WAS/drain pump discharge check valves
4	RAS/WAS/drain pump discharge drain valves
4	RAS/WAS/drain pump electro-magnetic flow meters (*E+H*)
4	RAS/WAS/drain pump discharge isolation valves
1	Sludge wasting system, including • one (1) ON/OFF automatic valve • one (1) electro-magnetic flow meter (*E+H*) • one (1) isolation valve
Process Chemical Dosing System – DS-011 Sheet 1 of 2	
1	Skid-mounted NaOH dosing system (*Prominent*), including one (1) duty and one (1) standby chemical metering pumps, and associated instruments and valves
1	NaOH IBC day tank (330 gallons)
1	Movable level switch for NaOH IBC day tank

Quantity	Description
Membrane Cleaning System – DS-011 Sheet 2 of 2	
1	Skid-mounted sodium hypochlorite dosing system (*Prominent*), including one (1) duty and one (1) standby mag-drive centrifugal chemical dosing pumps (*Finish Thompson, 1.0 HP*), one (1) electric-magnetic flow meter (*E+H*), and associated pressure indicators and valves
2	Wall-mounted sodium hypochlorite dosing pump VFDs
1	Sodium hypochlorite IBC day tank (330 gallons)
1	Movable level switch for sodium hypochlorite IBC day tank
1	Skid-mounted citric acid dosing system (*Prominent*), including one (1) duty and one (1) standby mag-drive centrifugal chemical dosing pumps (*Finish Thompson, 1.0 HP*), one (1) electric-magnetic flow meter (*E+H*), and associated pressure indicators and valves
2	Wall-mounted citric acid dosing pump VFDs
1	Citric acid IBC day tank (330 gallons)
1	Movable level switch for citric acid IBC day tank
Compressed Air System – DS-012	
1+1	Air compressors (*Atlas Copco, 7.5 HP*), each compressor mounted on an 80-gallon vertical receiver tank
1	Compressed air assembly (loose shipped) includes: • one (1) coalescing filter • one (1) low air pressure switch • one (1) pressure regulator • one (1) low-low air pressure switch • associated valves
1+1	Refrigerated air driers and associated valves
Master Control Panel	
1	Master control panel (NEMA12) w/ Allen Bradley ControlLogix PLC and PanelView Plus 7 HMI and Allen Bradley I/O as specified in Section 455000, Item 2.9
General	
Incl.	Engineering service as shown in Section 3.a.2.1
Incl.	Operating & maintenance manuals
Incl.	Service and support – see Section 5 for details (1)
Incl.	InSight Pro – online monitoring and service – 2 years
Incl.	24/7 emergency phone support – 10 years
Incl.	Equipment mechanical warranty - 2 years from the date of substantial completion or 30 months from the shipment, which occurs first
Incl.	Membrane warranty – 15 years with the first 5 years full replacement membrane warranty and the following 10 years prorated membrane warranty

Notes:

1) Additional man-hours will be billed separately from the proposed system capital cost at a rate per day plus living and traveling expenses. Detailed SUEZ service rates are available upon request.
2) All SUEZ supplied equipment is designed for installation in an unclassified area unless noted in the P&ID drawings.
3) To receive complete 24/7 Emergency Telephone Technical Support Service and to allow for InSight Monitor Service, a suitable secure remote internet connection, by buyer, is required.

3.a.2.1 SUEZ Engineering Services

As part of the **Caesars Lane MBR** project, SUEZ will provide the following engineering services:

- Process Flow Diagram, List of Symbols, Piping and Instrumentation Drawings - in accordance with SUEZ's drafting and tagging standards
- Equipment bill of materials and vendor cut sheet binder.
- Detailed membrane tank general arrangement drawings, ZW cassette assembly drawings, cassette, support beam and bracket detail drawings, backpulse and / or CIP tank drawings. Suez has assumed detailed GA and layout drawings will be provided by Others.
- Preliminary biological tank GA, MBR equipment room GA, and MBR plant general layout drawings
- Electrical engineering submittal, to include, single line drawing, power and control wiring schematics, panel layout drawings, and bill of materials.
- Functional description, control narrative and operations sequence charts per SUEZ P&IDs
- PLC Programming for the supplied SUEZ system
- Operation and maintenance manuals per SUEZ standard
- Membrane storage and installation detail, draft commissioning schedule, contractor installation check list.

Engineering review and/or approval of documents for equipment not in SUEZ scope of supply is by Others.

3.a.3 Special Tools and Spare Parts

The following special tools and spare parts are included in SUEZ scope.

Special Tools & Spare Parts	
1	ZW500 64M cassette lifting bracket
1	Membrane fiber repair kit
1	Membrane module removal tool
4	Safety hoist ring for 64M cassettes
2	Pressure gauges
1	Level transmitter
1	Temperature transmitter
1	DO probe
1	pH probe

1	RAS pump seal kit
1	Backpulse pump seal kit
3	Membrane blower maintenance kits (Each kit includes one (1) blower V-belt and one (1) intake filter)
3	Process blower maintenance kits (Each kit includes one (1) blower V-belt and one (1) intake filter)
1	¼" ball valve
1	½" ball valve
1	1" ball valve
1	1½" ball valve
1	¼" solenoid valve
1	1" solenoid valve
1	1" pneumatic ball valve
1	3" butterfly valve
1	4" butterfly valve
1	8" butterfly valve
1	16" butterfly valve
1	10" pneumatic butterfly valve
1	Pneumatic actuator for 16" butterfly valve
1	4" pneumatic knife gate valve
1	18" knife gate valve
1	1" check valve
1	16" check valve
1	18" check valve
40	SSI fine bubble diffuser disc (2% of the total)
1	V-Port valve spare part kit (kit includes gasket graphoil, packing V-set PTFE, washer thrust BRG upper body, seat nick PI/HT 317, BRG lower body 317L, bearing thrust, gasket graphoil, seal O-ring PFA)

3.a.4 Scope of Supply by Others

The following items are for supply by buyer and will include but are not limited to:

- overall plant design responsibility
- review and approval of design parameters related to the biological process and/or membrane separation system
- review and approval of SUEZ-supplied tank and equipment drawings and specifications
- detail drawings of all termination points where SUEZ equipment or materials tie into equipment or materials supplied by buyer
- design, supply and installation of lifting devices including overhead traveling bridge crane able to lift 10,000 lb for membrane removal, lifting davits c/w a hoist.
- civil works, provision of main plant tank structure, buildings, equipment foundation pads etc. including but not limited to:

- common channels, housekeeping pads, equipment access platforms, walkways, handrails, stairs etc.
- equalization tank – as required
- bioreactor tank – complete with anoxic and aerobic zones
- scum box and associated pumps and instrument

- membrane tanks c/w tank solid covers and their support over membrane tanks.
- Based on Addendum #1 dated June 29, 2022, the following valves and piping inside the membrane tanks:

Valves and Piping inside Membrane Tanks	
4	Permeate headers (316 SS)
24	Permeate collection piping (8") and Straub couplings
24	Permeate isolation butterfly valves (8")
4	Air headers (304 SS)
24	Air distribution piping (6") and Straub couplings
24	Air isolation butterfly valves (3")
4	Air automatic isolation valves with limit switches

- treated water storage tank, as required
- HVAC equipment design, specifications and installation (where applicable)
- UPS, power conditioner, emergency power supply and specification (where applicable)
- 2 mm punched-hole pretreatment fine screens
- Starters and MCC for all SUEZ supplied equipment
- plant SCADA system
- process and utilities piping, pipe supports, hangers, valves, etc. including but not limited to:
  - piping, pipe supports and valves between SUEZ-supplied equipment and other plant process equipment
  - piping between any loose-supplied SUEZ equipment
  - process tank aeration system air piping, equalization tank system piping, etc.
  - interconnecting piping between SUEZ-supplied skidded equipment and tanks (as applicable)
- electrical wiring, conduit and other appurtenances required to provide power connections as required from the electrical power source to the SUEZ control panel and from the control panel to any electrical equipment, pump motors and instruments external to the SUEZ-supplied enclosure

- supply and installation of suitable, secure remote internet connection for 24/7 emergency telephone technical support service and InSight remote monitoring & diagnostics service
- design, supply and installation of equipment anchor bolts and fasteners for SUEZ supplied equipment, all seismic structural analysis and anchor bolt sizing.
- receiving (confirmation versus packing list), unloading and safe storage of SUEZ-supplied equipment at site until ready for installation
- installation on site of all SUEZ supplied loose-shipped equipment
- alignment of rotating equipment
- lubricating oil for all rotating equipment
- raw materials, chemicals, and utilities during equipment start-up and operation
- disposal of initial start-up wastewater and associated chemicals
- supply of seed sludge for biological process start-up purposes
- laboratory services, operating and maintenance personnel during equipment checkout, start-up and operation
- touch up primer and finish paint surfaces on equipment as required at the completion of the project
- weather protection as required for all SUEZ-supplied equipment. Skids and electrical panels are designed for indoor operation and will need shelter from the elements.

3.b SUEZ Membrane Module and Cassette

Cassette Properties



Table 1: Cassette Dimensions

Product	Width (A) mm (in)	Length (B) mm (in)	Height (C) mm (in)
500EV-64M	1,744 (68.7)	2,136 (84.1)	2,735 (107.7)
500D-52M			2,562 (100.9)

Table 2: Cassette Tie Points and Weights

Application	Product	Max. # of Modules	Min. # of Modules	Permeate Connection	Air Connection	Max. Shipping Weight [1] kg (lb)	Wet Weight [2] kg (lb)	Lifting Design Weight [3] kg (lb)	Cassette Material [4]
LEAPmbr	EV-64M	64	32	1 x 8" vert. pipe	1 x 3" FNPT half coupling	2,091 (4,610)	2,329 (5,135)	4,536 (10,000)	316L SS frame with engineered plastics
	D-52M	52	26	1 x 6" vert. pipe	1 x 3" FNPT half coupling	1,892 (4,172)	2,184 (4,816)	4,536 (10,000)	

[1] Crated with maximum number of modules

[2] Wet weight of a clean, fully populated cassette. Lower module population will reduce this value. Cassette support method and lifting module can also vary this weight, depending on design. An estimate is used based on several standard designs.

[3] Product lifting design weight assumes a fully populated cassette with solids accumulation, standard lifting module and hanging arms. Alternative support and lifting methods could vary this value.

[4] Alternative grades of stainless steel offered for cassettes are 304L, 2205 and SMO254 as required.

Membrane Properties



Membrane cross-section

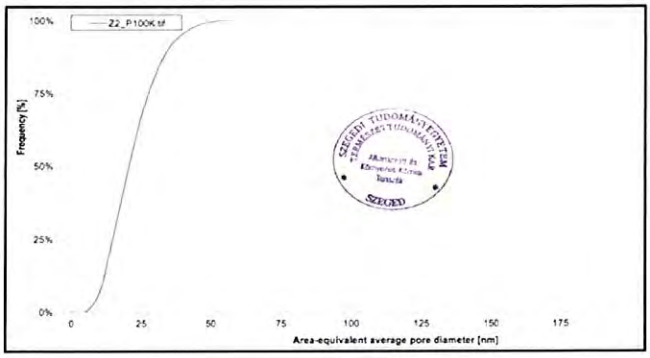

3rd party certified UF pore size



Table 3: module dimensions

Application	Product	Width – A mm (in)	Length- B mm (in) Header-to-Header	Depth – C mm (in)
MBR	500EV	861 (33.9)	2,051 (80.7)	51 (2.0)
	500D	844 (33.2)	1,940 (76.4)	49 (1.9)

Table 4: Module Properties

Application	Membrane Surface Area m² (ft²)	Lifting Weight [1] kg (lb)	Material	Nominal Pore Size [2] (µm)	Fiber Diameter [3] (mm)	Surface Properties	Fiber Tensile Strength [4] (N)	Flow Path
MBR	500EV 49.2 (530)	29 (64)	PVDF	0.04	2.2	Non-ionic & Hydrophilic	>600	Submerged, Outside-In
	500D 40.0 (430)	28 (61)						

[1] Clean wet weight excluding any solids accumulation

[2] Nominal pore size is often rounded to 40nm (0.04 micron) for simplicity.

[3] Fiber dimensions have been rounded to the nearest decimal place for simplicity.

[4] Tensile strength measured using a modification of ASTM protocol (D 3822)

Table 5: Operating & Cleaning Specifications [1]

Application	TMP Range kPa (psig)	Typ. Aeration Nm³/h/cassette (scfm/cassette)	Max. Operating Temp. °C (°F)	Operating pH Range	Backpulse Type	Max. Cleaning Temp. °C (°F)	Cleaning pH Range	Max. lifetime exposure Cl2 (ppm)
MBR	-55 to 55 (-8 to +8)	500EV 222-445 Nm³/h (132-264 SCFM) 500D 182-363 Nm³/h (108-215 SCFM)	40 (104)	5.0-9.5	Relax Aeration (Standard) Backpulse-capable (as-required)	40 (104)	2.0 – 10.5 (<30°C) 2.0 -10.0 (30-40°C)	1,000,000

[1] Cassettes can be populated with 26 to 52 modules (500D), or 32 to 64 modules (500EV). Normalized ADF flow for fully populated cassette at 150m ASL, 20°C wastewater temperature. Delivered value at modules will differ based on site conditions. Lower cassette populations will have a lower aeration rate.

ZeeWeed 500 Series Products

The ZeeWeed 500 series of membranes have been applied to MBR applications since 1997 when the ZW500A was introduced. There are four products within the current 5th generation – the ZW500M (laboratory use), ZW500S, ZW500D and ZW500EV. All ZeeWeed 500 series MBR products use the same PVDF chemistry formulation, designed specifically for membrane bioreactor application.

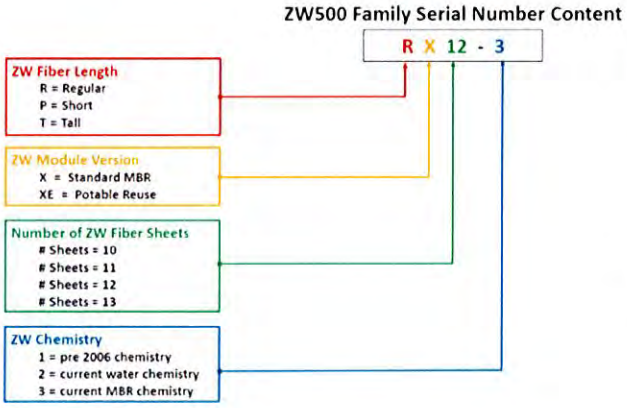

ZeeWeed 500 Product Identification

All ZeeWeed 500 series products have a product type identification code tied to the product specification. The code provides information on the version of the module, the fiber length, the number of sheets, and the membrane chemistry. It is typically found with the module serial number and takes the format of 1 to 3 letters, a number, and usually, but not always, a dash and third number.



Contact Us

If you would like to learn more about how SUEZ can provide MBR solutions for your large municipal projects, contact your SUEZ representative or visit our website.

3.c MBR System General Layout, Membrane Tank General Arrangement (GA), MBR Equipment Room GA, and Bioreactor GA

NOTE:
1. REQUIRED OVERALL FOOTPRINT : 215'-0" X 79'-0"

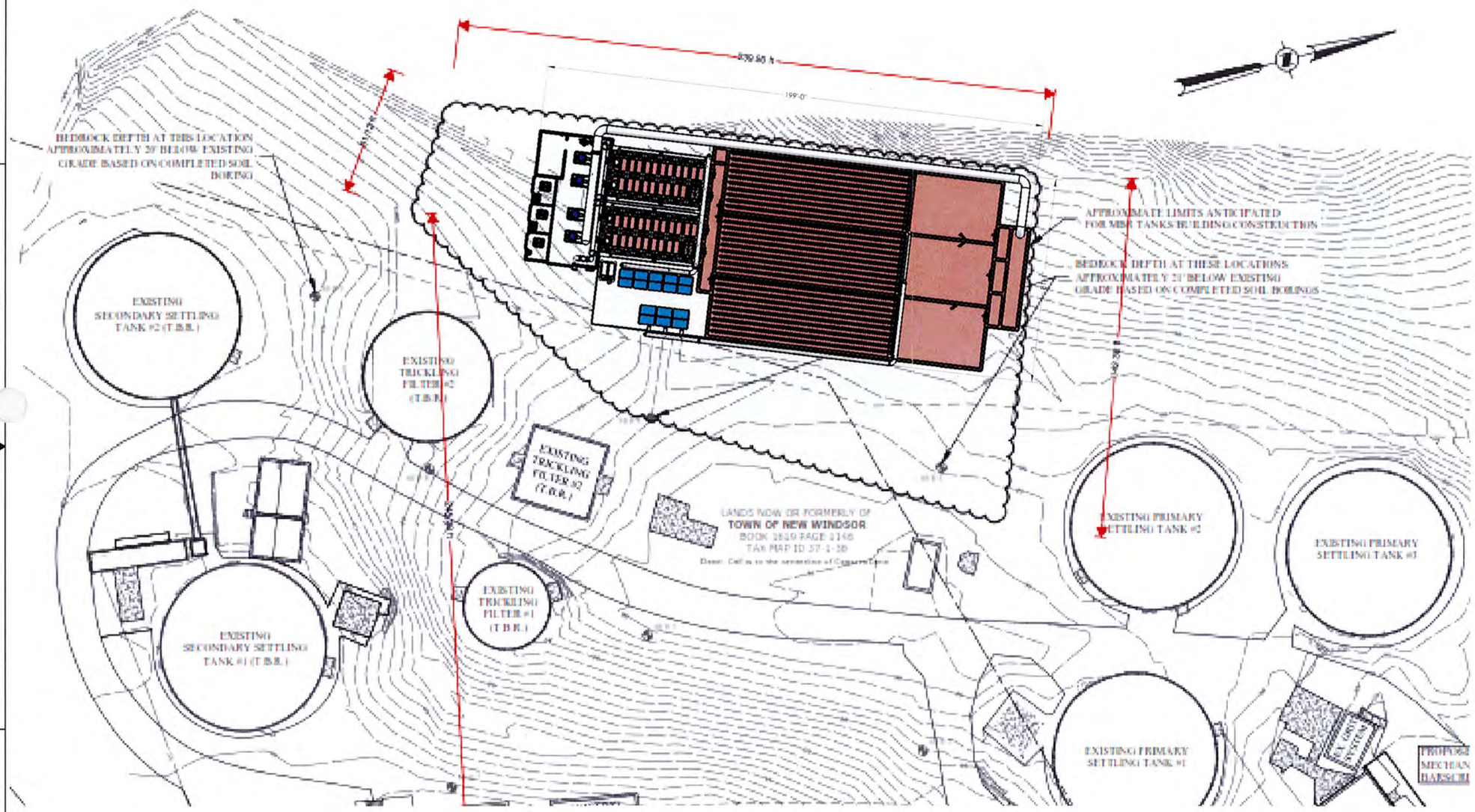

REFERENCE ONLY
DO NOT USE FOR CONSTRUCTION

REV.	DESCRIPTION	ECO	DWN	APPR	APPR	DATE

PROPRIETARY AND CONFIDENTIAL: THIS DRAWING AND ALL INFORMATION AND KNOWLEDGE CONTAINED OR REFERRED HEREIN ARE THE CONFIDENTIAL AND PROPRIETARY PROPERTY OF SUEZ AND AS SUCH ARE INSTRUMENTS OF SERVICE FOR USE SOLELY WITH RESPECT TO THIS PROJECT. THESE INSTRUMENTS OF SERVICE SHALL NOT BE REPRODUCED, TRANSMITTED, DISCLOSED OR USED OTHERWISE IN WHOLE OR IN PART, WITHOUT PRIOR WRITTEN AGREEMENT BY SUEZ AND MUST BE IMMEDIATELY RETURNED OR DESTROYED UPON REQUEST.

TOLERANCES UNLESS NOTED
DECIMALS ANGLES
X FRAC
XX
XXX

CUSTOMER INFORMATION: CAESARS LANE MBR

GENERAL LAYOUT

DRAWING NUMBER	REVISION
360077-AG-02	A
REF.:	DOC. OWNER:

PROJECT NO.	PART/MATERIAL NO.	SCALE	SIZE	SHEET
360077		1:250	D	1 OF 1

REVIT CAD PATH: C:\USERS\DANA.ROLSON\DESKTOP\360077 - CAESARS LANE MBR\3. Mechanical\Drawings

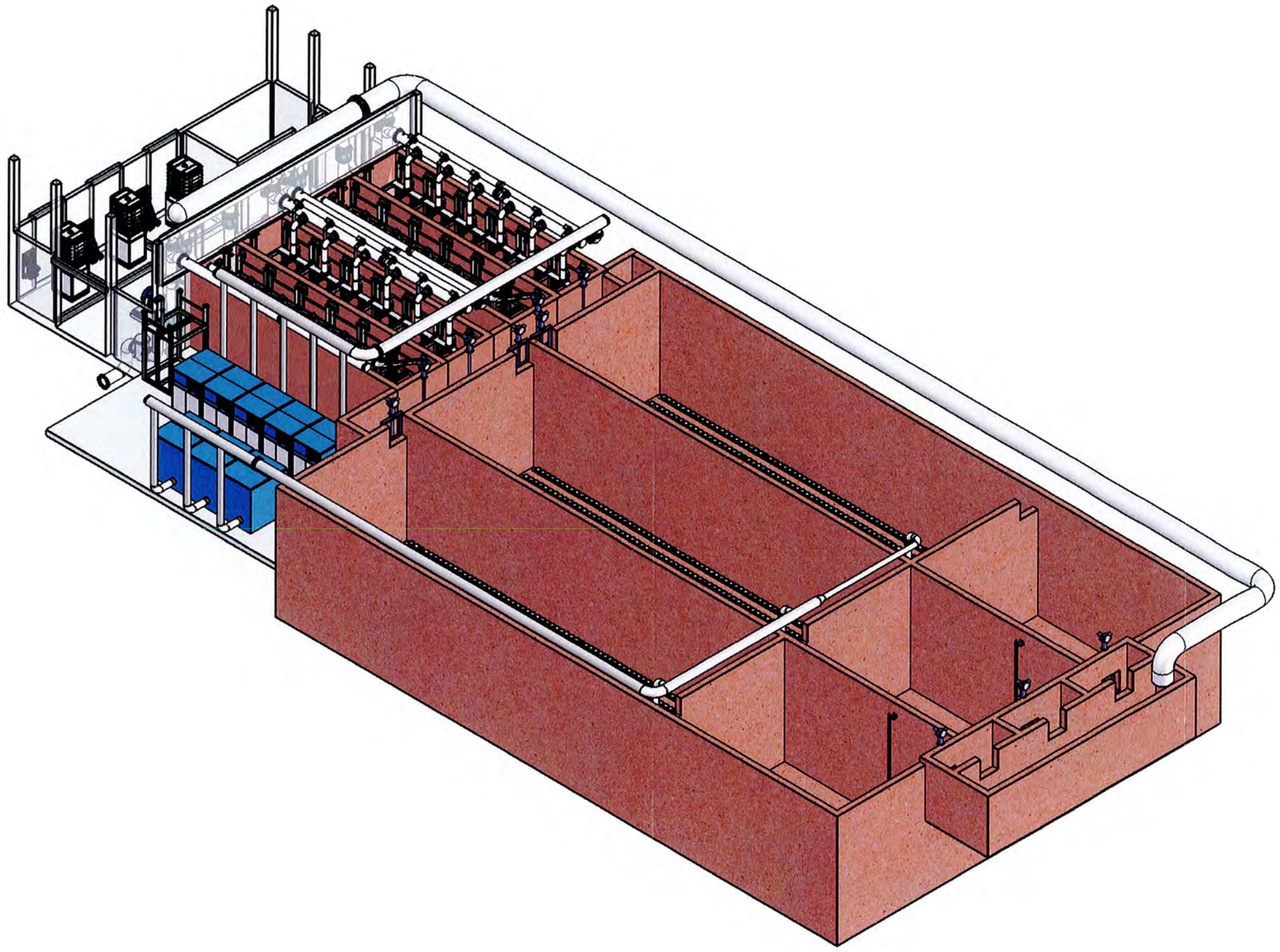

ISO VIEW

suez

REFERENCE ONLY
DO NOT USE FOR CONSTRUCTION

REV	DESCRIPTION	ECO	DWN	APPR	APPR	DATE

TOLERANCES UNLESS NOTED
DECIMALS .X .XX .XXX
ANGLES
FRAC

PROPRIETARY AND CONFIDENTIAL: THIS DRAWING AND ALL INFORMATION AND KNOWLEDGE CONTAINED OR REFERRED HEREIN ARE THE CONFIDENTIAL AND PROPRIETARY PROPERTY OF SUEZ AND AS SUCH ARE INSTRUMENTS OF SERVICE FOR USE SOLELY WITH RESPECT TO THIS PROJECT. THESE INSTRUMENTS OF SERVICE SHALL NOT BE REPRODUCED, TRANSMITTED, DISCLOSED OR USED OTHERWISE IN WHOLE OR IN PART, WITHOUT PRIOR WRITTEN AGREEMENT BY SUEZ AND MUST BE IMMEDIATELY RETURNED OR DESTROYED UPON REQUEST.

suez

CUSTOMER INFORMATION
CAESARS LANE MBR

GENERAL ARRANGEMENT

DRAWING NUMBER: 360077-AG-01
REVISION: A
REF.:
DOC. OWNER:
PROJECT NO.: 360077
PART/MATERIAL NO.:
SCALE: 1:100
SIZE: D
SHEET: 1 OF 2

LAST SAVED: Wednesday, July 6, 2022 11:12:15 AM

FILE LOCATION: C:\SWPDM\NAM-ITO\360077 - CAESARS LANE MBR\2. Mechanical Drawings\

NOTES:
1. ALL DIMENSIONS ARE IN FEET & INCHES.
2. TOTAL FOOT PRINT REQUIRED IS 215'-0" X 79'-0".
3. FOR DETAILED GA, PLEASE REFER BELOW DRAWINGS.
   - BIO-REACTOR TANK - 360077-PG-02.
   - MEMBRANE TANK - 360077-PG-03.
   - EQUIPMENT ROOM - 360077-PG-06.

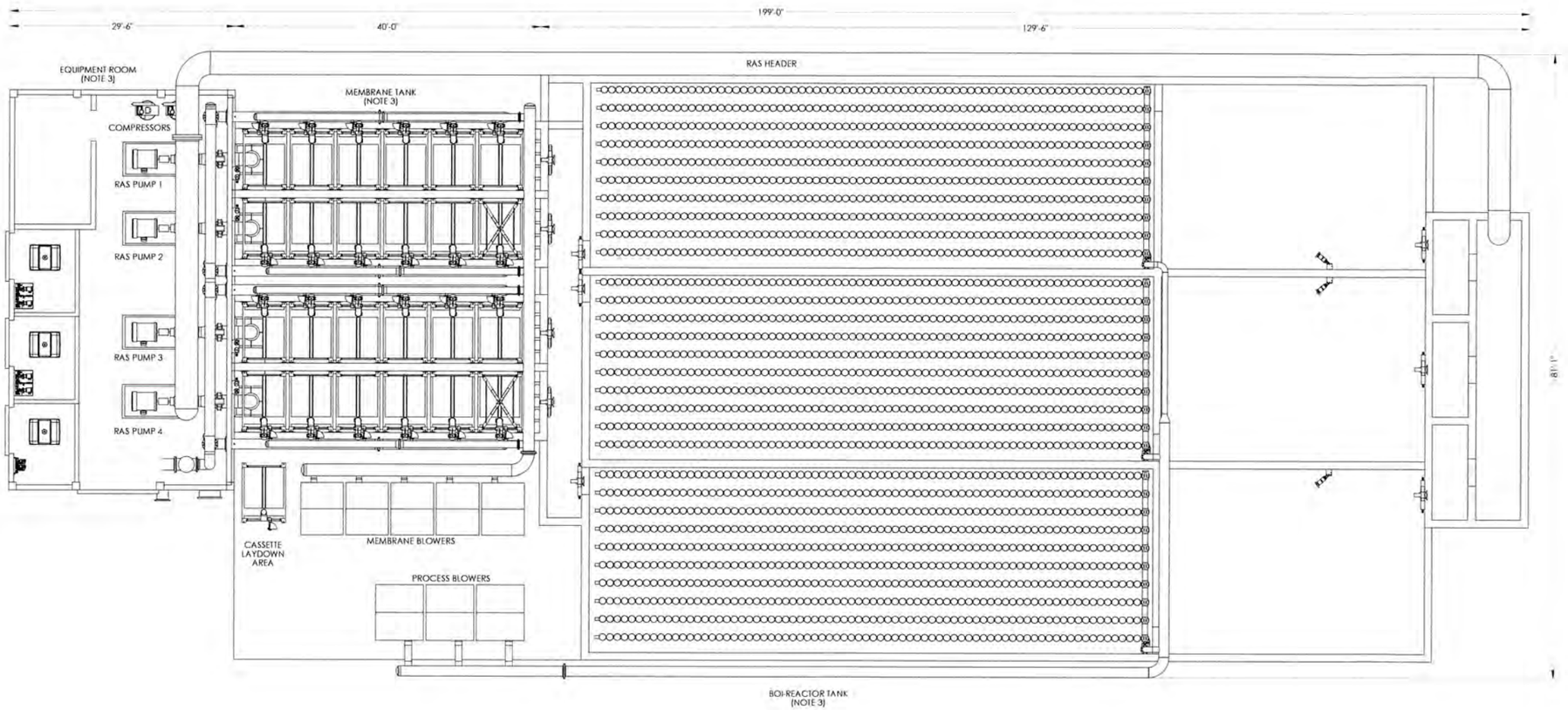

PLAN VIEW

suez

REFERENCE ONLY DO NOT USE FOR CONSTRUCTION

REV	DESCRIPTION	ECO	DWN	APPR	APPR	DATE

TOLERANCES UNLESS NOTED
DECIMALS .X .XX .XXX ANGLES FRAC

PROPRIETARY AND CONFIDENTIAL: THIS DRAWING AND ALL INFORMATION AND KNOWLEDGE CONTAINED OR REFERRED HEREIN ARE THE CONFIDENTIAL AND PROPRIETARY PROPERTY OF SUEZ AND AS SUCH ARE INSTRUMENTS OF SERVICE FOR USE SOLELY WITH RESPECT TO THIS PROJECT. THESE INSTRUMENTS OF SERVICE SHALL NOT BE REPRODUCED, TRANSMITTED, DISCLOSED OR USED OTHERWISE IN WHOLE OR IN PART, WITHOUT PRIOR WRITTEN AGREEMENT BY SUEZ AND MUST BE IMMEDIATELY RETURNED OR DESTROYED UPON REQUEST.

suez

CUSTOMER INFORMATION: CAESARS LANE MBR

GENERAL ARRANGEMENT

DRAWING NUMBER	REVISION
360077-AG-01	A

REF.: DOC. OWNER:

PROJECT NO.	PART/MATERIAL NO.	SCALE	SIZE	SHEET
360077		1:100	D	2 OF 2

LAST SAVED: Wednesday, July 6, 2022 11:12:15 AM

FILE LOCATION: C:\SWPDM\NAM ITO\360077 - CAESARS LANE MBR\2. Mechanical Drawings\

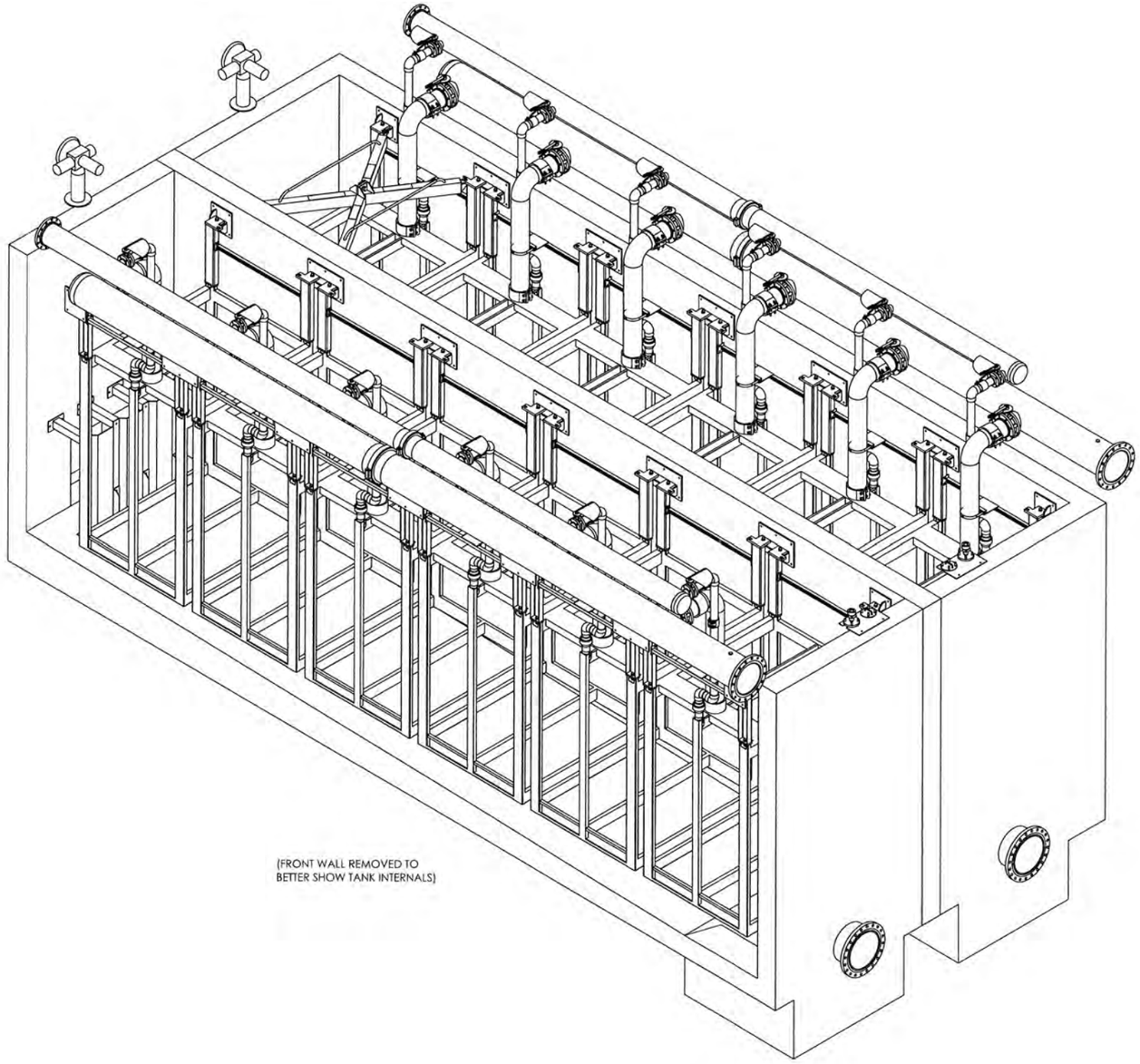

(FRONT WALL REMOVED TO
BETTER SHOW TANK INTERNALS)

ISO VIEW

suez

REFERENCE ONLY
DO NOT USE FOR
CONSTRUCTION

REV	DESCRIPTION	ECO	DWN	APPR	APPR	DATE
A	INITIAL RELEASE		VM	KK		20 JUN 22

PROPRIETARY AND CONFIDENTIAL: THIS DRAWING AND ALL INFORMATION AND KNOWLEDGE CONTAINED OR REFERRED HEREIN ARE THE CONFIDENTIAL AND PROPRIETARY PROPERTY OF SUEZ AND AS SUCH ARE INSTRUMENTS OF SERVICE FOR USE SOLELY WITH RESPECT TO THIS PROJECT. THESE INSTRUMENTS OF SERVICE SHALL NOT BE REPRODUCED, TRANSMITTED, DISCLOSED OR USED OTHERWISE IN WHOLE OR IN PART, WITHOUT PRIOR WRITTEN AGREEMENT BY SUEZ AND MUST BE IMMEDIATELY RETURNED OR DESTROYED UPON REQUEST.

TOLERANCES UNLESS NOTED
DECIMALS .X .XX .XXX ANGLES FRAC

suez

CUSTOMER INFORMATION
CAESARS LANE WTF
MBR SYSTEM

GENERAL ARRANGEMENT
MEMBRANE TANK
ZWEED 500 EV

DRAWING NUMBER	REVISION
360077-PG-03	A1

REF.: DOC. OWNER:

PROJECT NO.	PART/MATERIAL NO.	SCALE	SIZE	SHEET
360077		1:30	D	1 OF 2

FILE LOCATION: C:\SWPDM\NAM ITO\360077 - CAESARS LANE MBR\2. Mechanical Drawings\

NOTE:
1. ALL DIMENSIONS ARE IN INCHES.

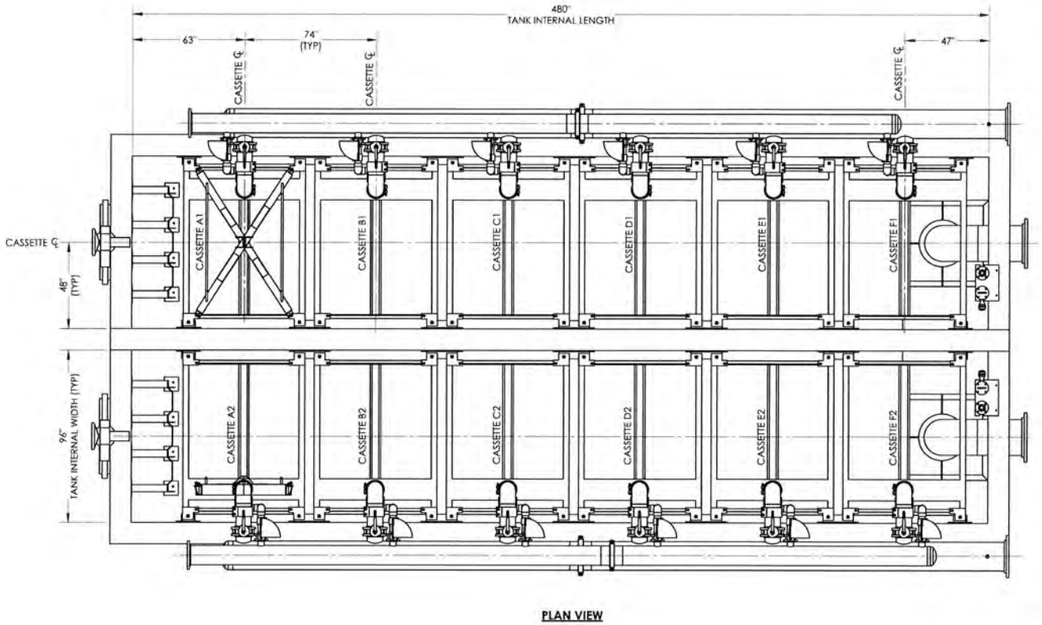

PLAN VIEW

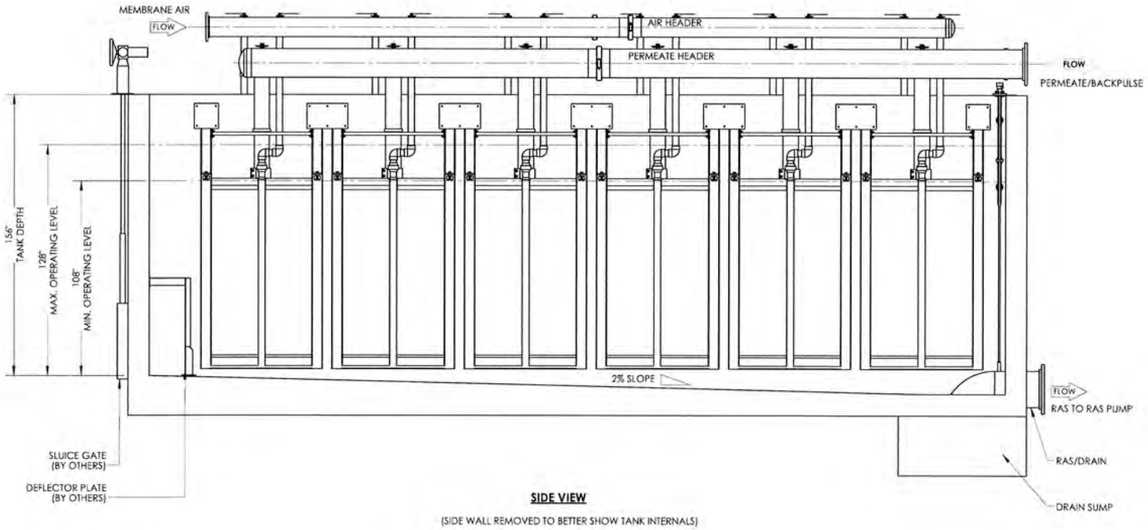

SIDE VIEW

(SIDE WALL REMOVED TO BETTER SHOW TANK INTERNALS)

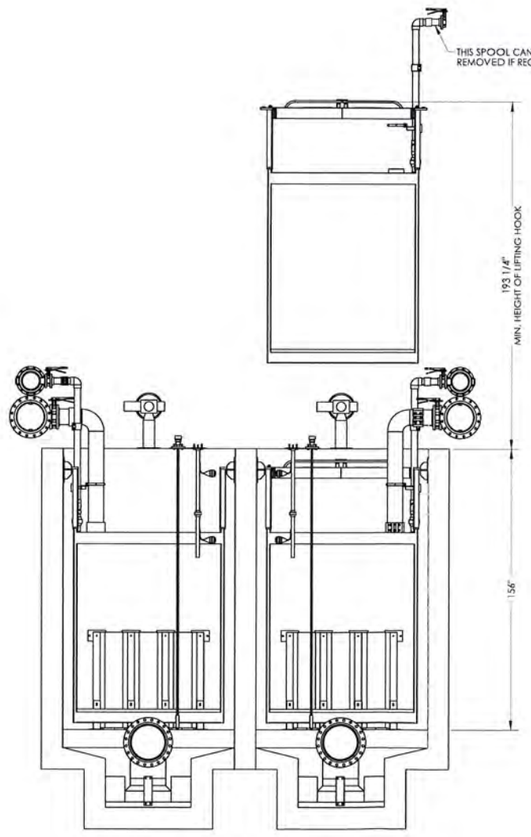

FRONT VIEW

(SIDE WALL REMOVED TO BETTER SHOW TANK INTERNALS)

suez

REFERENCE ONLY DO NOT USE FOR CONSTRUCTION

REV	DESCRIPTION	ECO	DWN	APPR	APPR	DATE
A	INITIAL RELEASE		VM	KK		20 JUN 22

TOLERANCES UNLESS NOTED
DECIMALS .X .XX .XXX
ANGLES
FRAC

suez

CUSTOMER INFORMATION

CAESARS LANE WTF
MBR SYSTEM

GENERAL ARRANGEMENT
MEMBRANE TANK
ZWEED 500 EV

DRAWING NUMBER	REVISION
360077-PG-03	A1

REF.: DOC. OWNER:

PROJECT NO.	PART/MATERIAL NO.	SCALE	SIZE	SHEET
360077		1:40	D	2 OF 2

PROPRIETARY AND CONFIDENTIAL: THIS DRAWING AND ALL INFORMATION AND KNOWLEDGE CONTAINED OR REFERRED HEREIN ARE THE CONFIDENTIAL AND PROPRIETARY PROPERTY OF SUEZ AND AS SUCH ARE INSTRUMENTS OF SERVICE FOR USE SOLELY WITH RESPECT TO THIS PROJECT. THESE INSTRUMENTS OF SERVICE SHALL NOT BE REPRODUCED, TRANSMITTED, DISCLOSED OR USED OTHERWISE IN WHOLE OR IN PART, WITHOUT PRIOR WRITTEN AGREEMENT BY SUEZ AND MUST BE IMMEDIATELY RETURNED OR DESTROYED UPON REQUEST.

FILE LOCATION: C:\SWPDM\NAM ITO\360077 CAESARS LANE MBR\2. Mechanical Drawings\

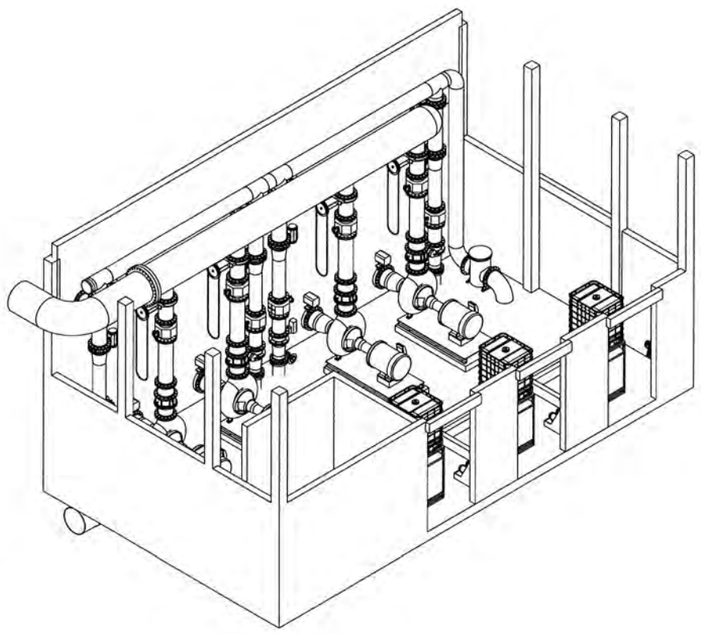

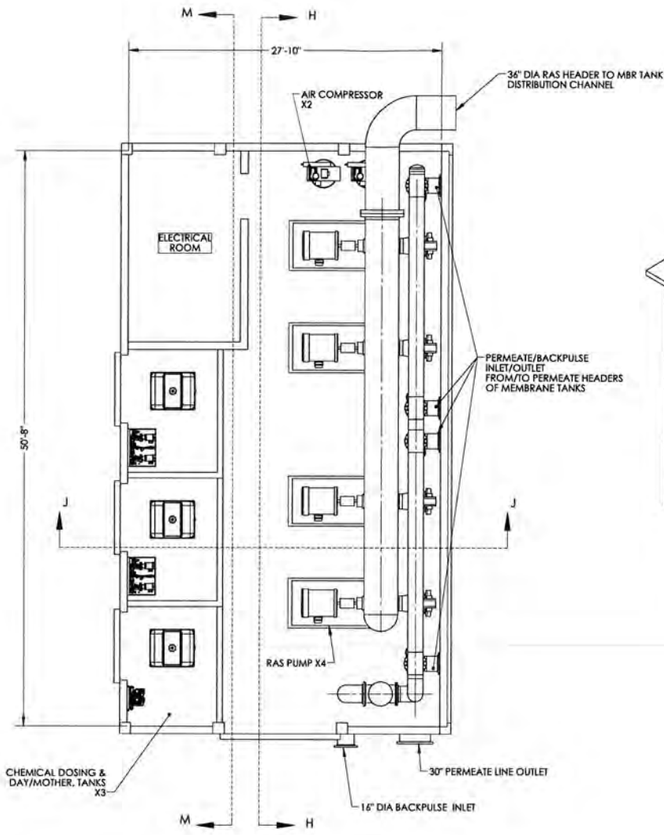

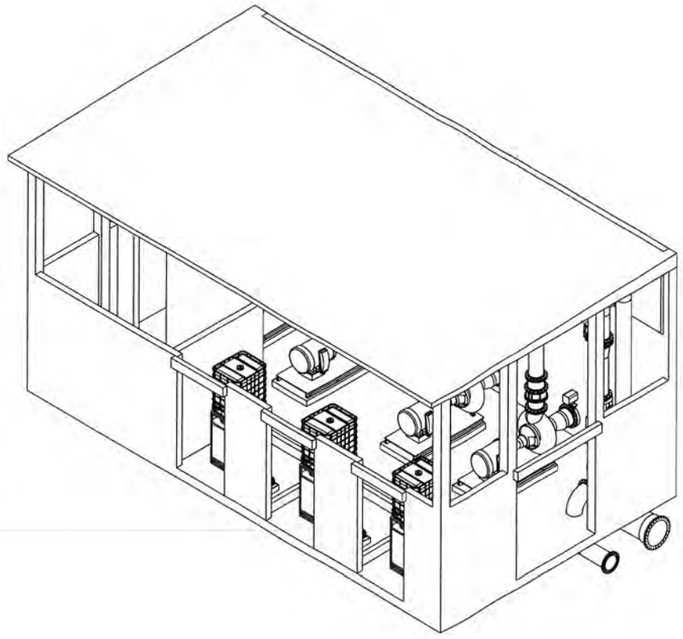

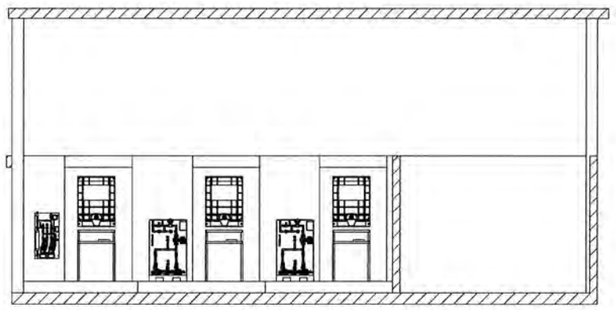

SECTION M-M

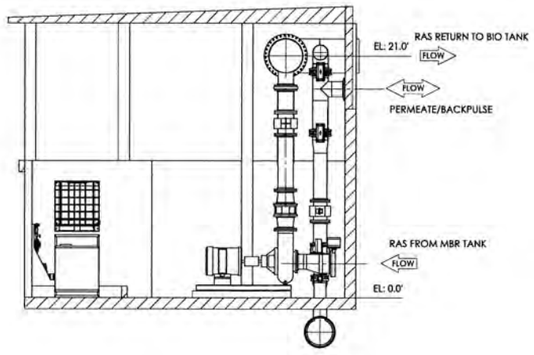

SECTION J-J

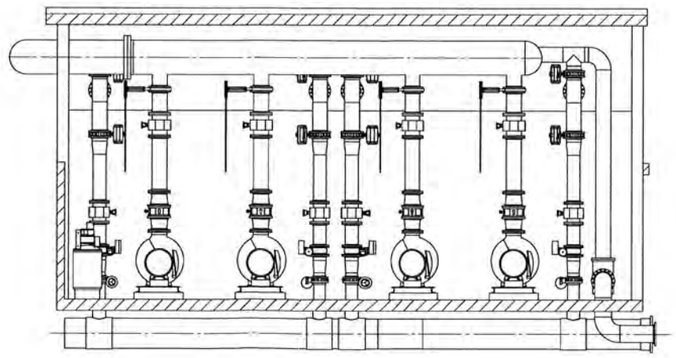

SECTION H-H

REV	DESCRIPTION	ECO	DWN	APPR	APPR	DATE

PROPRIETARY AND CONFIDENTIAL: THIS DRAWING AND ALL INFORMATION AND KNOWLEDGE CONTAINED OR REFERRED HEREIN ARE THE CONFIDENTIAL AND PROPRIETARY PROPERTY OF SUEZ AND AS SUCH ARE INSTRUMENTS OF SERVICE FOR USE SOLELY WITH RESPECT TO THIS PROJECT. THESE INSTRUMENTS OF SERVICE SHALL NOT BE REPRODUCED, TRANSMITTED, DISCLOSED OR USED OTHERWISE IN WHOLE OR IN PART, WITHOUT PRIOR WRITTEN AGREEMENT BY SUEZ AND MUST BE IMMEDIATELY RETURNED OR DESTROYED UPON REQUEST.

TOLERANCES UNLESS NOTED
DECIMALS .X .XX .XXX
ANGLES °
FRAC

suez

CUSTOMER INFORMATION
CAESARS LANE MBR

EQUIPMENT ARRANGEMENT
EQUIPMENT ROOM

DRAWING NUMBER: 360077-PG-06
REVISION: A
REF.:
DOC. OWNER:
PROJECT NO.: 360077
PART/MATERIAL NO.:
SCALE: 1:76
SIZE: D
SHEET: 1 OF 1

FILE LOCATION: C:\SWPDM\NAM-ITO\360077 - CAESARS LANE MBR\2. Mechanical Drawings\

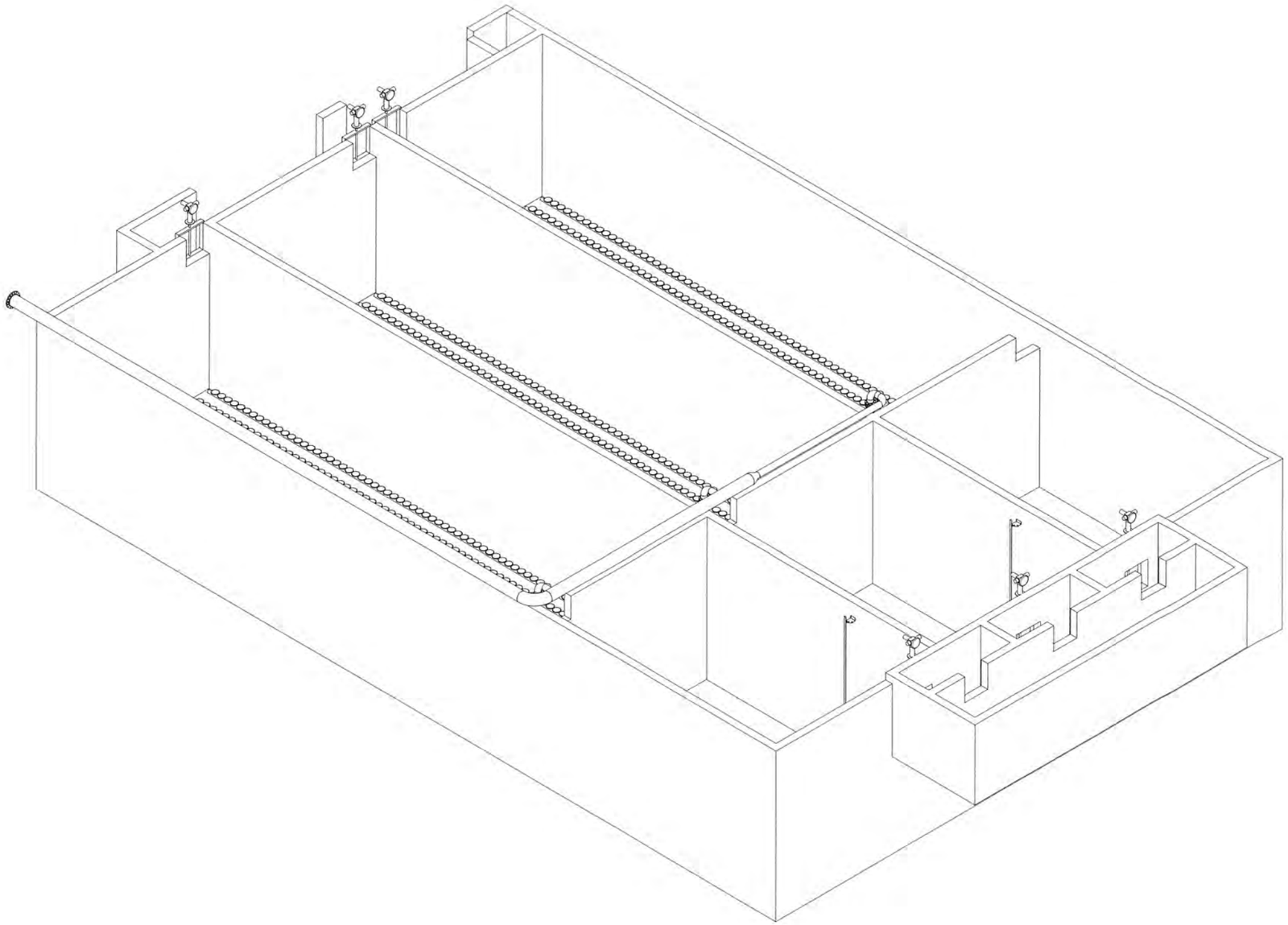

ISO VIEW

REFERENCE ONLY DO NOT USE FOR CONSTRUCTION

REV	DESCRIPTION	ECO	DWN	APPR	APPR	DATE
A	INITIAL RELEASE		MR	KK		12 JUL 22

PROPRIETARY AND CONFIDENTIAL: THIS DRAWING AND ALL INFORMATION AND KNOWLEDGE CONTAINED OR REFERRED HEREIN ARE THE CONFIDENTIAL AND PROPRIETARY PROPERTY OF SUEZ AND AS SUCH ARE INSTRUMENTS OF SERVICE FOR USE SOLELY WITH RESPECT TO THIS PROJECT. THESE INSTRUMENTS OF SERVICE SHALL NOT BE REPRODUCED, TRANSMITTED, DISCLOSED OR USED OTHERWISE IN WHOLE OR IN PART, WITHOUT PRIOR WRITTEN AGREEMENT BY SUEZ AND MUST BE IMMEDIATELY RETURNED OR DESTROYED UPON REQUEST.

TOLERANCES UNLESS NOTED
DECIMALS .X .XX .XXX
ANGLES
FRAC

suez

CUSTOMER INFORMATION
CAESARS LANE WTF
MBR SYSTEM

GENERAL ARRANGEMENT
BIO-REACTOR TANK

DRAWING NUMBER: 360077-PG-02
REVISION: A
REF.:
DOC. OWNER:
PROJECT NO.: 360077
PART/MATERIAL NO.:
SCALE: 1:75
SIZE: D
SHEET: 1 OF 2

LAST SAVED: Tuesday, July 12, 2022 8:37:44 PM

FILE LOCATION: C:\SWPDM\NAM-ITO\360077 - CAESARS LANE MBR\2. Mechanical Drawings\

NOTES:
1. ALL DIMENTIONS ARE IN FEET&INCHES

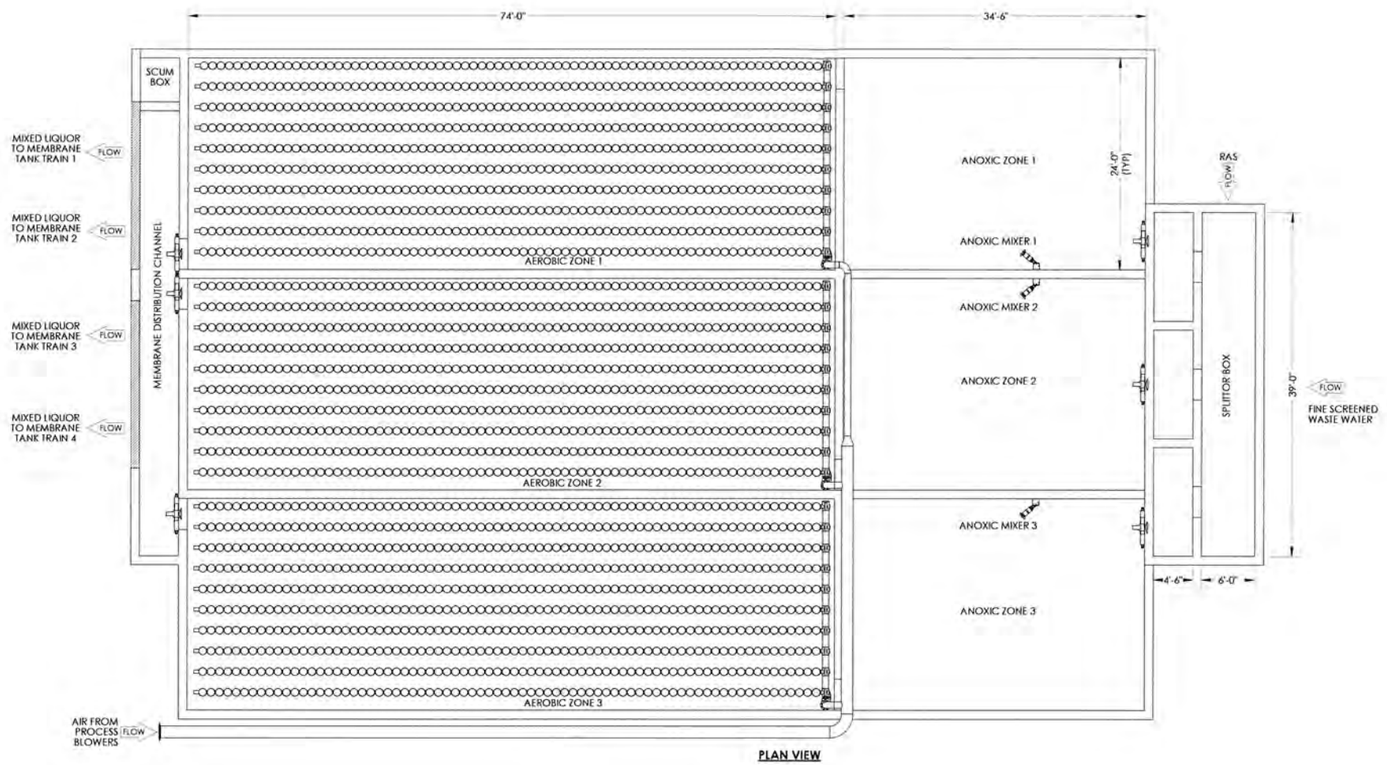

PLAN VIEW

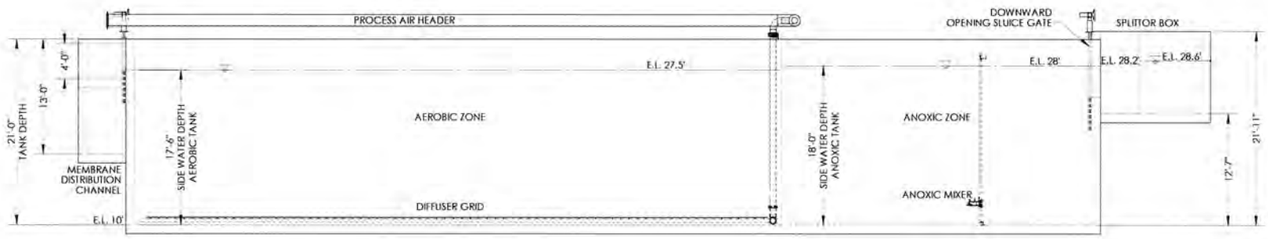

SIDE VIEW

REFERENCE ONLY
DO NOT USE FOR CONSTRUCTION

REV	DESCRIPTION	ECO	DWN	APPR	APPR	DATE
A	INITIAL RELEASE		MR	KK		12 JUL 22

TOLERANCES UNLESS NOTED
DECIMALS .X .XX .XXX
ANGLES °
FRAC

PROPRIETARY AND CONFIDENTIAL: THIS DRAWING AND ALL INFORMATION AND KNOWLEDGE CONTAINED OR REFERRED HEREIN ARE THE CONFIDENTIAL AND PROPRIETARY PROPERTY OF SUEZ AND AS SUCH ARE INSTRUMENTS OF SERVICE FOR USE SOLELY WITH RESPECT TO THIS PROJECT. THESE INSTRUMENTS OF SERVICE SHALL NOT BE REPRODUCED, TRANSMITTED, DISCLOSED OR USED OTHERWISE IN WHOLE OR IN PART, WITHOUT PRIOR WRITTEN AGREEMENT BY SUEZ AND MUST BE IMMEDIATELY RETURNED OR DESTROYED UPON REQUEST.

CUSTOMER INFORMATION
CAESARS LANE WTF
MBR SYSTEM

GENERAL ARRANGEMENT
BIO-REACTOR TANK

DRAWING NUMBER: 360077-PG-02
REVISION: A
REF.:
DOC. OWNER:
PROJECT NO.: 360077
PART/MATERIAL NO.:
SCALE: 1:100
SIZE: D
SHEET: 2 OF 2

FILE LOCATION: C:\SYNTOM\MASTER\360077 - CAESARS LANE MBR\2. Mechanical Drawings\
LAST SAVED: Tuesday, July 12, 2022 8:57:44 PM

3.e Process and Instrumentation Diagram (P&ID)

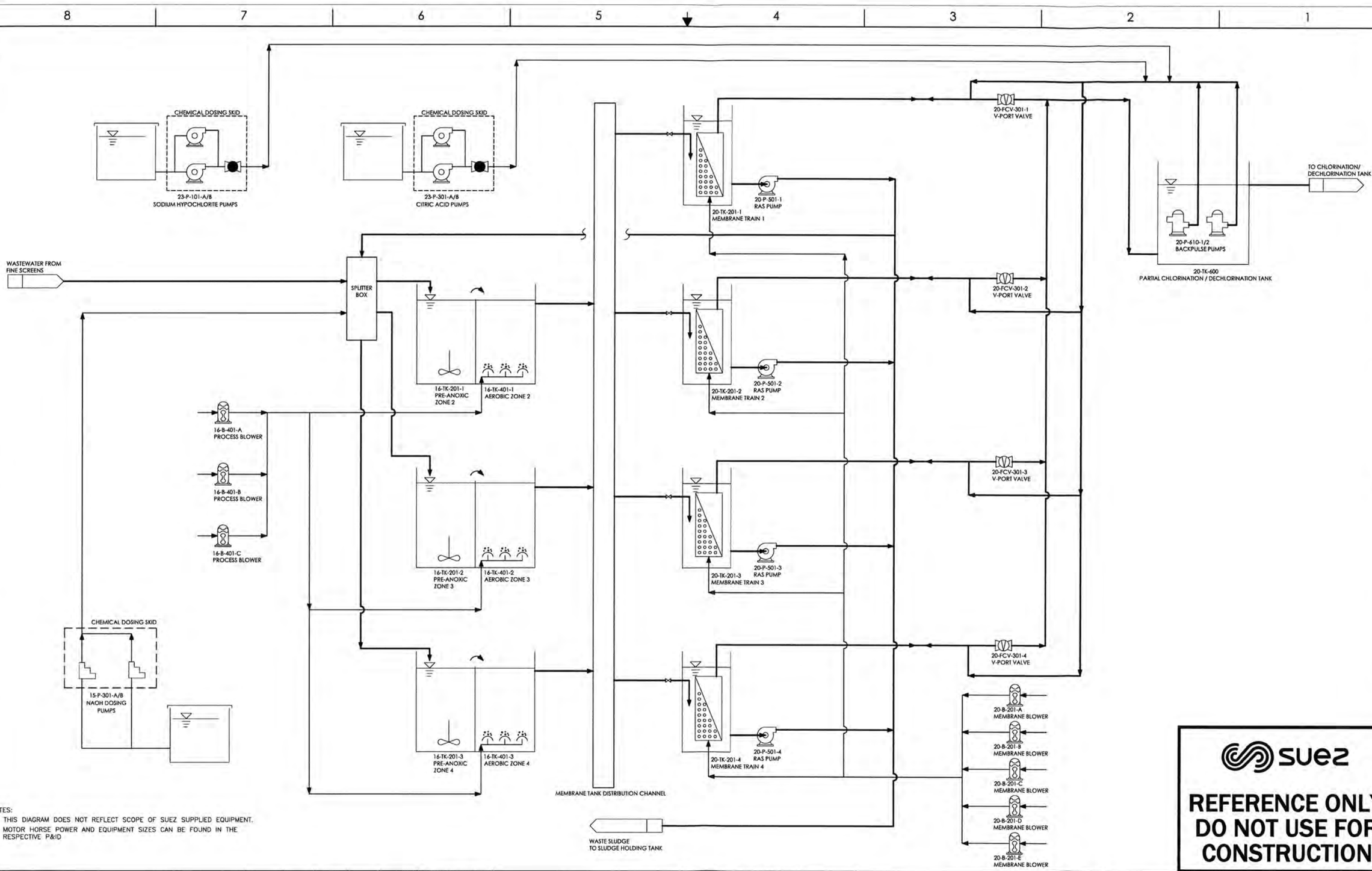

NOTES:
1. THIS DIAGRAM DOES NOT REFLECT SCOPE OF SUEZ SUPPLIED EQUIPMENT.
2. MOTOR HORSE POWER AND EQUIPMENT SIZES CAN BE FOUND IN THE RESPECTIVE P&ID

REFERENCE ONLY DO NOT USE FOR CONSTRUCTION

REV	DESCRIPTION	ECO	DWN	APPR	APPR	DATE
A	INITIAL DESIGN		RK	KK		09 JUN 22

TOLERANCES UNLESS NOTED: DECIMALS .X .XX .XXX; ANGLES; FRAC

PROPRIETARY AND CONFIDENTIAL: THIS DRAWING AND ALL INFORMATION AND KNOWLEDGE CONTAINED OR REFERRED HEREIN ARE THE CONFIDENTIAL AND PROPRIETARY PROPERTY OF SUEZ AND AS SUCH ARE INSTRUMENTS OF SERVICE FOR USE SOLELY WITH RESPECT TO THIS PROJECT. THESE INSTRUMENTS OF SERVICE SHALL NOT BE REPRODUCED, TRANSMITTED, DISCLOSED OR USED OTHERWISE IN WHOLE OR IN PART, WITHOUT PRIOR WRITTEN AGREEMENT BY SUEZ AND MUST BE IMMEDIATELY RETURNED OR DESTROYED UPON REQUEST.

suez

CUSTOMER INFORMATION: CAESARS LANE WTF MBR SYSTEM

PROCESS FLOW BOX DIAGRAM

DRAWING NUMBER: 360077-WTS-PR-T02-8511-DI-001 — REVISION: A

REF.: - DOC. OWNER:

PROJECT NO.: 360077 — PART/MATERIAL NO.: — SCALE: NONE — SIZE: D — SHEET: 1 OF 1

Water Technologies & Solutions

CAESARS LANE WASTEWATER TREATMENT FACILITY (WTF) MBR SYSTEM PIPING & INSTRUMENTATION DIAGRAMS

REV	DESCRIPTION	ECO	DWN	APPR	APPR	DATE
A	INITIAL RELEASE	-	MR	KK		14 JUN 22

PROPRIETARY AND CONFIDENTIAL: THIS DRAWING AND ALL INFORMATION AND KNOWLEDGE CONTAINED OR REFERRED HEREIN ARE THE CONFIDENTIAL AND PROPRIETARY PROPERTY OF SUEZ AND AS SUCH ARE INSTRUMENTS OF SERVICE FOR USE SOLELY WITH RESPECT TO THIS PROJECT. THESE INSTRUMENTS OF SERVICE SHALL NOT BE REPRODUCED, TRANSMITTED, DISCLOSED OR USED OTHERWISE IN WHOLE OR IN PART, WITHOUT PRIOR WRITTEN AGREEMENT BY SUEZ AND MUST BE IMMEDIATELY RETURNED OR DESTROYED UPON REQUEST.

TOLERANCES UNLESS NOTED
DECIMALS: .X, .XX, .XXX — ANGLES: FRAC

CUSTOMER INFORMATION: CAESARS LANE WTF MBR SYSTEM

P&ID
TITLE PAGE

DRAWING NUMBER: 360077-WTS-PR-T02-8511-DS-001
REVISION: A
REF.: -
DOC. OWNER: -
PROJECT NO.: 360077
PART/MATERIAL NO.:
SCALE: NONE
SIZE: D
SHEET: 1 OF 3

FILE LOCATION: C:_ADSK\cad\NAM-ITO\360077-Caesars Lane WWTP\1. PID and P&ID\360077-WTS-PR-T02-8511-DS-001.dwg

8 — CONTROL VALVE ACTUATORS

ACTUATED VALVE OPERATION IS NORMALLY CLOSED UNLESS MARKED OTHERWISE

- PISTON DOUBLE ACTING
- PISTON SPRING TO OPEN
- PISTON SPRING TO CLOSE
- DIAPHRAGM DOUBLE ACTING
- DIAPHRAGM SPRING TO OPEN
- DIAPHRAGM SPRING TO CLOSE
- DIAPHRAGM DOUBLE BALANCING
- BACK PRESSURE CONTROL (EXTERNAL REGULATING)
- BACK PRESSURE CONTROL (INTERNAL REGULATING)
- PRESSURE REDUCING (EXTERNAL REGULATING)
- PRESSURE REDUCING (INTERNAL REGULATING)
- ROTARY MOTOR ANALOG
- ROTARY MOTOR DIGITAL
- I/P CONVERTER
- POSITIONER
- TRAVEL STOP
- GEAR — MANUAL GEAR WHEEL
- CHAIN — MANUAL CHAIN WHEEL
- SOLENOID
- SOLENOID 3 WAY
- SOLENOID 4 WAY

VALVE SYMBOLS

OPEN DURING NORMAL PROCESS OPERATION — CLOSED DURING NORMAL PROCESS OPERATION

- GATE (OR GENERIC)
- BALL
- BUTTERFLY
- NEEDLE
- GLOBE
- DIAPHRAGM
- ANGLE
- PLUG
- PINCH
- V-BALL
- KNIFE GATE
- UPWARD OPENING SLIDING GATE
- DOWNWARD OPENING SLIDING GATE
- MANUAL BLAST GATE
- BACKFLOW PREVENTER
- CHECK
- INJECTION QUILL
- FOOT
- FLOAT
- MUD
- 3 WAY
- 4 WAY
- 5 WAY
- 6 WAY
- 2 VALVE MANIFOLD
- 3 VALVE MANIFOLD
- 5 VALVE MANIFOLD
- SAMPLE

7 — RELIEF

- PRESSURE SAFETY
- VACUUM SAFETY
- MULTIFUNCTION
- PRESSURE RUPTURE DISK
- VACUUM RUPTURE DISK
- AIR RELEASE
- VACUUM BREAKER
- VENT
- GROUND
- DRAIN

6 — PUMPS, BLOWERS, & COMPRESSORS

- CENTRIFUGAL PUMP
- CENTRIFUGAL/ REGENERATIVE BLOWER
- PROPELLER PUMP
- ROTARY LOBE COMPRESSOR BLOWER
- METERING PUMP
- AIR OPERATED DOUBLE DIAPHRAGM PUMP
- VACUUM PUMP (DRY)
- POSITIVE DISPLACEMENT PUMP
- VACUUM PUMP LIQUID RING
- VERTICAL TURBINE PUMP
- AIR COMPRESSOR PISTON
- CAN PUMP
- AIR COMPRESSOR ROTARY SCREW
- WELL PUMP
- REFRIGERATED AIR DRYER
- DRUM PUMP
- FAN
- ERI PRESSURE EXCHANGER (HP / LP)
- SUBVERSIBLE SUMP PUMP
- MOTOR
- HYDRAULIC PRESSURE BOOSTER (HP / LP)
- PROGRESSIVE CAVITY PUMP

5 — FLOW ELEMENT

- PADDLE WHEEL
- ANNUBAR
- FLOW NOZZLE
- FLUME
- MAGNETIC
- PITOT
- SONIC/ ULTRASONIC
- TURBINE
- VENTURI TUBE
- VORTEX
- MASS FLOW/ CORIOLIS
- ROTAMETER
- IN-LINE FLOW GLASS
- FLOW STRAIGHTENER
- FIXED ORIFICE
- ADJUSTABLE ORIFICE
- RESTRICTED ORIFICE
- RESTRICTED ORIFICE ANGLE
- ORIFICE PLATE QUICK-CHANGE

4 — CONNECTIONS

- FLANGE
- FLANGE BLIND
- MECHANICAL COUPLING OR VICTAULIC
- MECHANICAL COUPLING OR VICTAULIC PLUG
- SANITARY
- SANITARY PLUG
- THREADED
- THREADED PLUG
- SOCKET
- UNION
- CAMLOCK
- CAMLOCK PLUG
- HOSE BARB
- WELDED PIPE CAP
- PLAIN END PIPE COUPLING
- REDUCER
- COMPRESSION FITTING
- COMPRESSION FITTING PLUG
- SPECTACLE BLIND OPEN
- SPECTACLE BLIND CLOSED

HEATING

- TANK HEATER
- HEAT EXCHANGER
- IN-LINE HEATER
- PLATE & FRAME HEAT EXCHANGER
- DESUPERHEATER

FILTERS

- FIXED SCREEN
- TOP HAT STRAINER
- BAR SCREEN
- HEPA FILTER
- Y STRAINER
- CONICAL STRAINER
- FILTER
- PUMP SCREEN
- STEAM TRAP
- RESIN TRAP

RO/UF

- FOUR PORT HOUSING
- TWO PORT HOUSING
- END PORT HOUSING
- MEMBRANE MODULE

3 — VESSELS/TRIM

- CONICAL BOTTOM TANK
- TANK (CLOSED TOP)
- TANK (OPEN TOP)
- DOMED TANK
- PRESSURE VESSEL HORIZONTAL/ VERTICAL OR RECEIVER

2 — MISCELLANEOUS

- PROPELLER AGITATOR
- VORTEX BREAKER
- VESSEL INSULATION
- LEVEL GLASS
- ELLIPTICAL MANWAY
- MANHOLE
- MANHOLE W/ DAVIT ARM
- VESSEL SIGHT GLASS
- WATER LEVEL
- LADDER/ PLATFORM

- MUFFLER
- EDUCTOR
- STATIC MIXER
- EXPANSION JOINT
- SILENCER
- VIBRATION ISOLATOR
- HIGH PRESSURE FLEXIBLE CONNECTOR
- INJECTION SPARGER
- DIAPHRAGM SEAL/ GAUGE GUARD
- PULSATION DAMPENER
- SPRAYER NOZZLE
- DESICCANT AIR DRYER
- HYDROMETER POT
- COARSE BUBBLE DIFFUSER ELEVATION VIEW
- FINE BUBBLE DIFFUSER ELEVATION VIEW
- THERMOWELL
- TOP MOUNT LEVEL SWITCH
- ULTRASONIC LEVEL
- CALIBRATION COLUMN
- XXX / XXX — P/G TAIL
- ION EXCHANGE BOTTLE

1 — SCOPE BREAK

- CLIENT/OTHER / SUEZ

MATERIAL BREAK

MATERIAL A — MATERIAL B

PIPE INSULATION/ DOUBLE CONTAINMENT

PP 2" ("PP" INDICATES PERSONNEL PROTECTION - OPTIONAL)

LINE TYPES

- PRIMARY PROCESS
- SECONDARY PROCESS
- SAMPLE/DRAINS/ VENTS/ETC
- PRIMARY PROCESS (BY OTHERS)
- SECONDARY PROCESS (BY OTHERS)
- FUTURE
- EQUIPMENT LIMIT OR BOUNDARY LINE
- EQUIPMENT
- EQUIPMENT (BY OTHERS)
- FLEX HOSE/TUBING
- SOFTWARE-LINK
- ELECTRICAL
- ELECTROMAGNETIC OR SONIC SIGNAL (WIRELESS)
- PNEUVATIC
- HYDRAULIC SIGNAL
- CAPILLARY TUBING
- HEAT-TRACING
- STEAM-TRACE
- ELECTRICAL-TRACE

MISCELLANEOUS LINE OBJECTS

- SLOPE
- CONTINUATION SYMBOL
- CONTINUATION SYMBOL
- CROSSOVER LINE
- REVISION CLOUD
- A — REVISION TRIANGLE

REV	DESCRIPTION					DATE
A	INITIAL RELEASE	-	MR	KK		14 JUN 22
		ECO	DWN	APPR	APPR	DATE

PROPRIETARY AND CONFIDENTIAL: THIS DRAWING AND ALL INFORMATION AND KNOWLEDGE CONTAINED OR REFERRED HEREIN ARE THE CONFIDENTIAL AND PROPRIETARY PROPERTY OF SUEZ AND AS SUCH ARE INSTRUMENTS OF SERVICE FOR USE SOLELY WITH RESPECT TO THIS PROJECT. THESE INSTRUMENTS OF SERVICE SHALL NOT BE REPRODUCED, TRANSMITTED, DISCLOSED OR USED OTHERWISE IN WHOLE OR IN PART, WITHOUT PRIOR WRITTEN AGREEMENT BY SUEZ AND MUST BE IMMEDIATELY RETURNED OR DESTROYED UPON REQUEST.

TOLERANCES UNLESS NOTED: DECIMALS .X .XX .XXX — ANGLES — FRAC

CUSTOMER INFORMATION: CAESARS LANE WTF MBR SYSTEM

P&ID: LEGENDS & SYMBOLS

DRAWING NUMBER: 360077-WTS-PR-T02-8511-DS-001 — REVISION: A

REF.: - — DOC. OWNER: -

PROJECT NO.	PART/MATERIAL NO.	SCALE	SIZE	SHEET
360077		NONE	D	2 OF 3

FILE LOCATION: C:_ASSKYdrat\NAM-ITO\360077-Caesars Lane WWTP\1. PID and PFD\360077-WTS-PR-T02-8511-DS-001.dwg

INSTRUMENT FUNCTIONS

FIRST LETTER	MEASURED OR INITIATING VARIABLE	A						C		E	G		K	L	Q	R	S				T		Y	V,Z			SPECIAL IDENTIFICATION	
SUCCEEDING LETTER		ALARM	HIGH ALARM	HIGH ALARM	LOW ALARM	LOW-LOW ALARM	SENSOR FAULT ALARM	BLIND CONTROLLER	INDICATING CONTROLLER	SENSOR (PRIMARY ELEMENT)	GLASS	INDICATOR	CONTROL STATION	PILOT LIGHT	TOTALIZER	RECORD	SWITCH	HIGH-HIGH SWITCH	HIGH SWITCH	LOW SWITCH	LOW-LOW SWITCH	BLIND TRANSMITTER	INDICATING TRANSMITTER	SOLENOID VALVE (PILOT), RELAY, COMPUTATION, CONVERTER	CONTROL VALVE	VALVE	FINAL CONTROL ELEMENT	SYMBOL	DESCRIPTION
A	ANALYSIS	AA	AAHH	AAH	AAL	AALL	AAT	AC	AIC	AE		AI		AL		AR	AS	ASHH	ASH	ASL	ASLL	AT	AIT	AY	ACV	AV	AZ		
B	BURNER, COMBUSTION																												
C	USER'S CHOICE																												
D	USER'S CHOICE																												
E	VOLTAGE	EA	EAHH	EAH	EAL	EALL	EAT	EC	EIC	EE		EI	EK	EL		ER	ES	ESHH	ESH	ESL	ESLL	ET	EIT	EY			EZ		
F	FLOW	FA	FAHH	FAH	FAL	FALL	FAT	FC	FIC	FE	FG	FI		FL	FQI	FR	FS	FSHH	FSH	FSL	FSLL	FT	FIT	FY	FCV	FV		FO	ORIFICE PLATE
FF	FLOW RATIO	FFA	FFAHH	FFAH	FFAL	FFALL		FFC	FFIC			FFI				FFR	FFS	FFSHH	FFSH	FFSL	FFSLL			FFY	FFCV				
G	USER'S CHOICE																												
H	HAND	HA						HC	HIC					HL			HS								HCV	HV		HMS	PUSHBUTTON SWITCH
I	CURRENT (ELECTRICAL)	IA	IAHH	IAH	IAL	IALL	IAT	IC	IIC	IE		II	IK	IL		IR	IS	ISHH	ISH	ISL	ISLL	IT	IIT	IY			IZ		
J	POWER	JA	JSHH	JAH	JAL	JALL	JAT	JC	JIC	JE		JI	JK	JL	JQI	JR	JS	JSHH	JSH	JSL	JSLL	JT	JIT	JY			JZ		
K	TIME SCHEDULE	KA										KI		KL			KS							KY					
KQ	TIME TOTAL	KQA	KQAHH	KQAH	KQAL	KQALL						KQI		KQL		KQR	KQS	KQSHH	KQSH	KQSL	KQSLL								
L	LEVEL	LA	LAHH	LAH	LAL	LALL	LAT	LC	LIC	LE	LG	LI		LL		LR	LS	LSHH	LSH	LSL	LSLL	LT	LIT	LY	LCV	LV		LKx	LEVEL RATE-OF-CHANGE
M	MOTOR CONTROL												MK				MS												
N	USER'S CHOICE																												
O	USER'S CHOICE																												
P	PRESSURE OR VACUUM	PA	PAHH	PAH	PAL	PALL	PAT	PC	PIC			PI		PL		PR	PS	PSHH	PSH	PSL	PSLL	PT	PIT	PIT	PY	PV		PSV	PRESSURE SAFETY VALVE
PD	PRESSURE DIFFERENTIAL	PDA	PDAHH	PDAH	PDAL	PDALL	PDAT	PDC	PDIC			PDI		PDL		PDR	PDS	PDSHH	PDSH	PDSL	PDSLL	PDT	PDIT	PDIY	PDCV				
Q	QUANTITY														QQI														
R	RADIATION																												
S	SPEED OR FREQUENCY	SA	SAHH	SAH	SAL	SALL	SAT	SC	SIC	SE		SI	SK	SL		SR	SS	SSHH	SSH	SSL	SSLL	ST	SIT	SY	SCV		SZ		
T	TEMPERATURE	TA	TAHH	TAH	TAL	TALL	TAT	TC	TIC	TE		TI		TL		TR	TS	TSHH	TSH	TSL	TSLL	TT	TIT	TY	TCV	TV	TZ	TW	THERMOWELL
U	MULTI-VARIABLE																					UT	UIT						
V	VIBRATION OR MECH. ANALYSIS	VA	VAHH	VAH			VAT			VE		VI		VL		VR	VS	VSHH	VSH			VT	VIT	VY					
W	WEIGHT OR FORCE	WA	WAHH	WAH	WAL	WALL	WAT	WC	WIC	WE		WI		WL	WQI	WR	WS	WSHH	WSH	WSL	WSLL	WT	WIT	WY	WCV	WV	WZ		
X	UNCLASSIFIED																												
Y	EVENT, STATE OR PRESENCE	YA										YI	YK	YL		YR	YS							YY					
Z	POSITION OR DIMENSION	ZA	ZAO=OPEN		ZAC=CLOSE		ZAT	ZC	ZIC	ZE	ZG	Z	ZK	ZL		ZR	ZS	ZSO=OPEN		ZSC=CLOSE		ZT	ZIT	ZY	ZCV	ZV	ZZ	ZKx	POSITION RATE-OF-CHANGE

INSTRUMENT SYMBOLS

- PANEL MOUNT INSTRUMENT
- FIELD MOUNT OR PRIMARY INSTRUMENT
- BEHIND PANEL INSTRUMENT
- PILOT LIGHT
- PLC FUNCTION WITH DISPLAY
- PLC FUNCTION, BLIND
- PLC INPUT/OUTPUT

DI _ DISCRETE INPUT
DO _ DISCRETE OUTPUT
AI _ ANALOG INPUT
AO _ ANALOG OUTPUT

FUNCTIONS

- I — UNDEFINED INTERLOCK LOGIC
- Σ — SUMMING

CONTINUATION ARROWS

SERVICE
A | SHEET X
FLOW:
PRESSURE:
TEMP:
FLOW-SINGLE DIRECTION

SERVICE
A | SHEET X
FLOW:
PRESSURE:
TEMP:
FLOW-BOTH DIRECTIONS

A — TRANSFER ARROW TO SAME SHEET

1 | PID NUMBER SHEET X — ELECTRICAL TRANSFER ARROW TO DIFFERENT PID DOCUMENT

1 — ELECTRICAL TRANSFER ARROW TO SAME PID DOCUMENT

EQUIPMENT / INSTRUMENT TAGGING SCHEME

11-XXX-222A-3
- 11 — IDENTICAL SKID/TRAIN IDENTIFIER (IF NECESSARY)
- XXX — MULTIPLE INSTRUMENT IDENTIFIER (IF NECESSARY)
- 222 — EQUIPMENT NUMBER/ INSTRUMENT LOOP NUMBER
- A — EQUIPMENT ABBREVIATION/ INSTRUMENT FUNCTION
- 3 — PROCESS AREA

LINE IDENTIFIER

X"-XXPPPA-SNN
- X" — LINE CLASS SPECIFICATION
- SNN — SCHEDULE (OPTIONAL)
- A — SERVICE DIFFERNTIATOR (OPTIONAL)
- PPP — PR CODE (OPTIONAL)
- XX — MATERIAL CODE
- X" — PIPE SIZE

MATERIAL CODE	MATERIAL
	METALLIC
CC	CONCRETE
AUST	AUSTENITIC STAINLESS STEEL
AY	ALLOY 20
CI	CAST IRON
CS	CARBON STEEL
CU	COPPER
DI	DUCTILE IRON
DL	PVDF LINED
DUPL	DUPLEX STAINLESS STEEL
HC	HASTELLOY C
PL	POLYPROPYLENE LINED
SA	304, 304L STAINLESS STEEL
SB	AL-6XN
SC	254-SMO
SD	2205
SE	2507
SF	904L
SG	ZERON 100
SS	316, 316L STAINLESS STEEL
SUAU	SUPER AUSTENITIC STAINLESS STEEL
TL	PTFE LINED
	PLASTIC
CP	CPVC
FR	FIBER REINFORCED PLASTIC
PE	POLYETHYLENE
PP	POLYPROPYLENE
PV	PVC
PD	PVDF
PT	PTFE

PR CODE	CLASS
	METALLIC
125	ANSI CLASS 125
150	ANSI CLASS 150
300	ANSI CLASS 300
400	ANSI CLASS 400
600	ANSI CLASS 600
900	ANSI CLASS 900
	PLASTIC
040	SCHEDULE 40
080	SCHEDULE 80
120	SCHEDULE 120
D64	SDR 64
D41	SDR 41
D32	SDR 32.5
D26	SDR 26
D21	SDR 21
D17	SDR 17
D13	SDR 13.5
	MULTIPLE
P06	PN6
P10	PN10
P16	PN16
P20	PN20
P50	PN50
P68	PN68
P100	PN100
A00	ATMOSPHERIC
V00	VACUUM

EQUIPMENT ABBREVIATIONS

AB	ABSORBER
AC	AIR COMPRESSOR
ACF	ACTIVATED CARBON FILTER
AER	AERATOR
ARV	AIR RELEASE VALVE
B	BLOWER
BF	BAG FILTER
C	CENTRIFUGE, CYCLONE
CD	CONDENSER
CDM	CATALYTIC DESTRUCT MODULE
CF	CARTRIDGE FILTER
CH	CHILLER
CHL	CHLORINATOR
CIP	CLEAN-IN-PLACE
CL	CLARIFIER
CONV	CONVEYOR
CORS	CATALYTIC OXYGEN REMOVAL SYSTEM
CP	CONTROL PANEL
CR	CRYSTALIZER
CS	CHEMICAL SYSTEM
CT	COOLING TOWER, CARBON TOWER
CV	CHECK VALVE
DAF	DISSOLVED AIR FLOATATION
DO	DISSOLVED OXYGEN
DMF	DUAL MEDIA FILTER
DR	AIR DRIER
E	EDUCTOR
EAF	ENTRAPPED AIR FLOATATION
ED	ELECTRODIALYSIS
EDI	ELECTRODEIONIZATION
EDR	ELECTRODIALYSIS REVERSAL
EV	EVAPORATOR
F	FILTER
FAN	FAN
F.C.	FAIL CLOSE
FDA	FORCED DRAFT AERATOR, DEGASIFIER
F.O.	FAIL OPEN
F.L.	FAIL LAST
FP	FILTER PRESS
GF	GRAVITY FILTER
H	HEATER
HF	HEPA FILTER
HMI	HUMAN-MACHINE INTERFACE
HOA	HAND-OFF-AUTO
HPB	HYDRAULIC PRESSURE BOOSTER
HX	HEAT EXCHANGER
IAS	INSTRUMENT AIR SUPPLY
IQ	INJECTION QUILL, INJECTION CHECK VALVE
IX	ION EXCHANGER
LS	LIME SOFTENER
M	MOTOR
MBR	MEMBRANE BIOREACTOR
MCC	MOTOR CONTROL CENTER
MD	MEMBRANE DEGASIFIER
MF	MICROFILTRATION
ML	MUFFLER, SILENCER
MMF	MULTIMEDIA FILTER
MX	MIXER
NF	NANOFILTRATION
N.O.	NORMALLY OPEN
OC	OXYGEN CONCENTRATOR
ORP	OXYGEN-REDUCTION POTENTIAL
OZ	OZONATOR
OZG	OZONE GENERATOR
P	PUMP
PD	PULSATION DAMPENER
PLC	PROGRAMMABLE LOGIC CONTROLLER
PSE	RUPTURE DISC
PUV	MULTIFUNCTION VALVE
PX	PRESSURE EXCHANGER
RO	REVERSE OSMOSIS
RP	ROTARY PRESS
RT	RESIN TRAP
SC	SCRUBBER
SCP	SCRAPER
SCR	SCREEN
SFT	SOFTENER
SKM	SKIMMER
SM	STATIC MIXER, INLINE MIXER
ST	STEAM TRAP
STK	MEMBRANE STACK (ED, EDR, EDI, E-CELL)
STR	STRAINER
SV	SAMPLE VALVE
TK	TANK
TOC	TOTAL ORGANIC CARBON
TRB	TURBINE
UF	ULTRAFILTRATION
UPS	UNINTERRUPTIBLE POWER SUPPLY
UV	ULTRAVIOLET IRRADIATOR
VB	VACUUM BREAKER
VD	VACUUM DEGASIFIER
VFD	VARIABLE FREQUENCY DRIVE

REV	DESCRIPTION	ECO	DWN	APPR	APPR	DATE
A	INITIAL RELEASE	-	MR	KK		14 JUN 22

TOLERANCES UNLESS NOTED
DECIMALS .X .XX .XXX
ANGLES FRAC

PROPRIETARY AND CONFIDENTIAL: THIS DRAWING AND ALL INFORMATION AND KNOWLEDGE CONTAINED OR REFERRED HEREIN ARE THE CONFIDENTIAL AND PROPRIETARY PROPERTY OF SUEZ AND AS SUCH ARE INSTRUMENTS OF SERVICE FOR USE SOLELY WITH RESPECT TO THIS PROJECT. THESE INSTRUMENTS OF SERVICE SHALL NOT BE REPRODUCED, TRANSMITTED, DISCLOSED OR USED OTHERWISE IN WHOLE OR IN PART, WITHOUT PRIOR WRITTEN AGREEMENT BY SUEZ AND MUST BE IMMEDIATELY RETURNED OR DESTROYED UPON REQUEST.

CUSTOMER INFORMATION
CAESARS LANE WTF
MBR SYSTEM

P&ID
LEGENDS & SYMBOLS

DRAWING NUMBER: 360077-WTS-PR-T02-8511-DS-001
REVISION: A
REF.: -
DOC. OWNER: -
PROJECT NO.: 360077
PART/MATERIAL NO.:
SCALE: NONE
SIZE: D
SHEET: 3 OF 3

FILE LOCATION: C:_ADSKVault\NAM-ITO\360077-Caesars Lane WWFP\1. PID and P&ID\360077-WTS-PR-T02-8511-DS-001.dwg

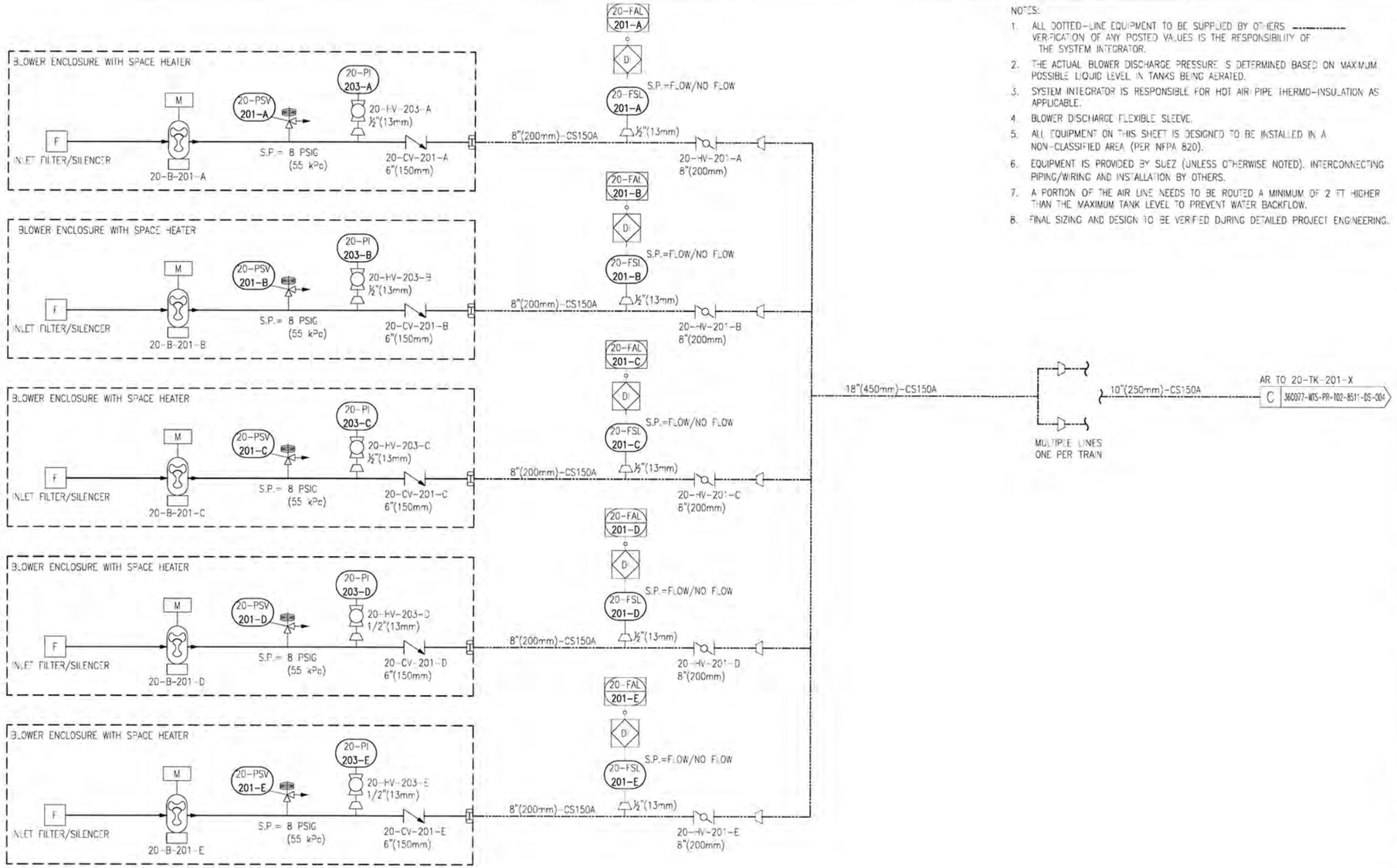

NOTES:

1. ALL DOTTED-LINE EQUIPMENT TO BE SUPPLIED BY OTHERS ---------- VERIFICATION OF ANY POSTED VALUES IS THE RESPONSIBILITY OF THE SYSTEM INTEGRATOR.
2. THE ACTUAL BLOWER DISCHARGE PRESSURE IS DETERMINED BASED ON MAXIMUM POSSIBLE LIQUID LEVEL IN TANKS BEING AERATED.
3. SYSTEM INTEGRATOR IS RESPONSIBLE FOR HOT AIR PIPE THERMO-INSULATION AS APPLICABLE.
4. BLOWER DISCHARGE FLEXIBLE SLEEVE.
5. ALL EQUIPMENT ON THIS SHEET IS DESIGNED TO BE INSTALLED IN A NON-CLASSIFIED AREA (PER NFPA 820).
6. EQUIPMENT IS PROVIDED BY SUEZ (UNLESS OTHERWISE NOTED). INTERCONNECTING PIPING/WIRING AND INSTALLATION BY OTHERS.
7. A PORTION OF THE AIR LINE NEEDS TO BE ROUTED A MINIMUM OF 2 FT HIGHER THAN THE MAXIMUM TANK LEVEL TO PREVENT WATER BACKFLOW.
8. FINAL SIZING AND DESIGN TO BE VERIFIED DURING DETAILED PROJECT ENGINEERING.

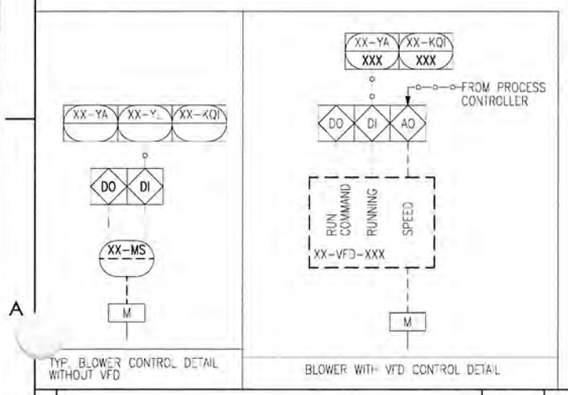

MEMBRANE BLOWER DATA	
NO OF DUTY BLOWERS	4
NO of STANDBY BLOWER	1
TOTAL # OF BLOWERS	5
TAG NUMBERS	20-B-201-A/B/C/D/E
BLOWER RATED CAPACITY	1,557 ICFM AT 5.5 PSIG
TYPE OF BLOWER	POSITIVE DISPLACEMENT
BLOWER ENCLOSURE INCLUDED	YES, WITH SPACE HEATER
SPEED CONTROL	YES FOR 20-B-201-A/B NO FOR 20-B-201-C/D/E
ELECTYRIC MOTOR	TEFC, 60 HP AT 1800 RPM
VOLTAGE	480V/3PH/60HZ

REFERENCE ONLY DO NOT USE FOR CONSTRUCTION

REV	DESCRIPTION	ECO	DWN	APPR	APPR	DATE
A	INITIAL RELEASE	-	MR	KK		14 JUN 22

PROPRIETARY AND CONFIDENTIAL: THIS DRAWING AND ALL INFORMATION AND KNOWLEDGE CONTAINED OR REFERRED HEREIN ARE THE CONFIDENTIAL AND PROPRIETARY PROPERTY OF SUEZ AND AS SUCH ARE INSTRUMENTS OF SERVICE FOR USE SOLELY WITH RESPECT TO THIS PROJECT. THESE INSTRUMENTS OF SERVICE SHALL NOT BE REPRODUCED, TRANSMITTED, DISCLOSED OR USED OTHERWISE IN WHOLE OR IN PART, WITHOUT PRIOR WRITTEN AGREEMENT BY SUEZ AND MUST BE IMMEDIATELY RETURNED OR DESTROYED UPON REQUEST.

TOLERANCES UNLESS NOTED
DECIMALS .X .XX .XXX
ANGLES
FRAC

CUSTOMER INFORMATION
CAESARS LANE WTF
MBR SYSTEM

P&ID
BLOWER - MEMBRANE BLOWER

DRAWING NUMBER: 360077-WTS-PR-T02-8511-DS-002
REVISION: A
REF.: -
DOC. OWNER: -
PROJECT NO.: 360077
PART/MATERIAL NO.:
SCALE: NONE
SIZE: D
SHEET: 1 of 2

FILE LOCATION: C:_ASSET\Draft\NAM-ITO\360077-Caesars Lane WWTP\1 PID and P&ID\360077-WTS-PR-T02-8511-DS-002.dwg

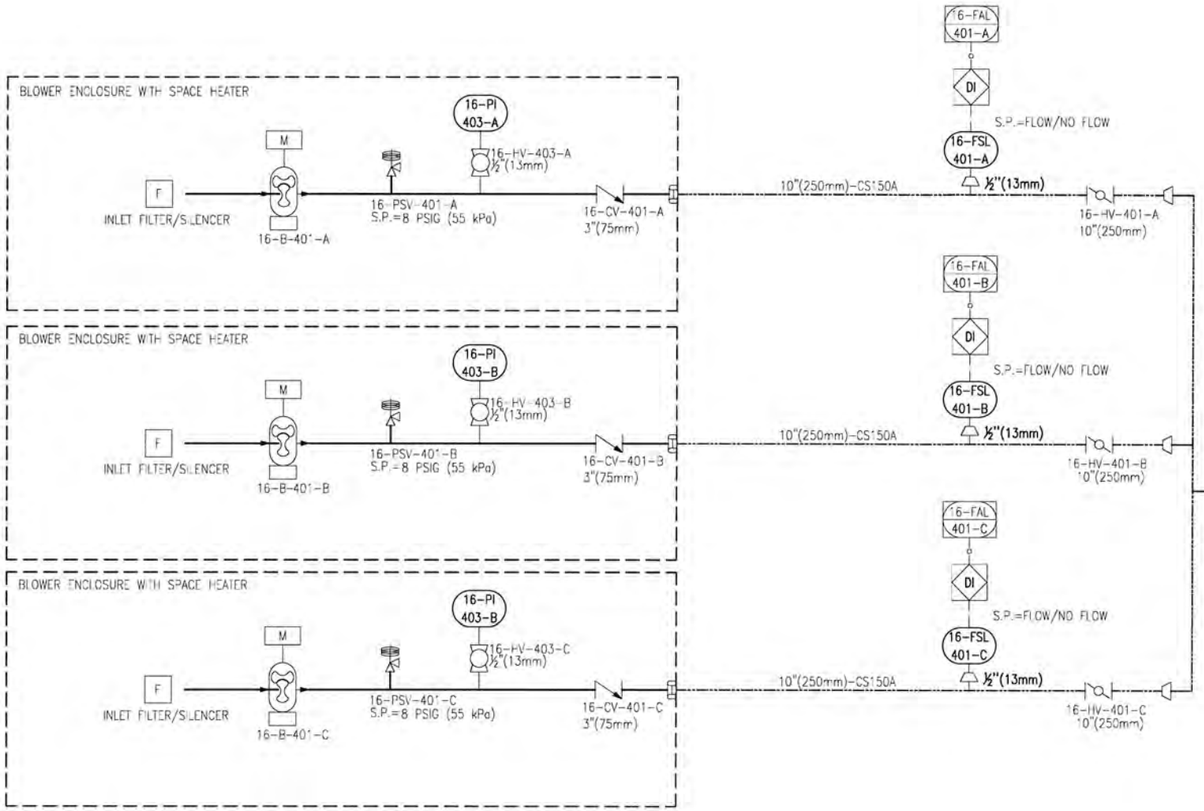

NOTES:

1. ALL DOTTED-LINE EQUIPMENT TO BE SUPPLIED BY OTHERS. VERIFICATION OF ANY POSTED VALUES IS THE RESPONSIBILITY OF THE SYSTEM INTEGRATOR.
2. THE ACTUAL BLOWER DISCHARGE PRESSURE IS DETERMINED BASED ON MAXIMUM POSSIBLE LIQUID LEVEL IN TANKS BEING AERATED.
3. SYSTEM INTEGRATOR IS RESPONSIBLE FOR HOT AIR PIPE THERMO-INSULATION AS APPLICABLE.
4. BLOWER DISCHARGE FLEXIBLE SLEEVE.
5. ALL EQUIPMENT ON THIS SHEET IS DESIGNED TO BE INSTALLED IN A NON-CLASSIFIED AREA (PER NFPA 820).
6. EQUIPMENT IS PROVIDED BY SUEZ (UNLESS OTHERWISE NOTED). INTERCONNECTING PIPING/WIRING AND INSTALLATION BY OTHERS.
7. FINAL SIZING AND DESIGN TO BE VERIFIED DURING DETAILED PROJECT ENGINEERING.

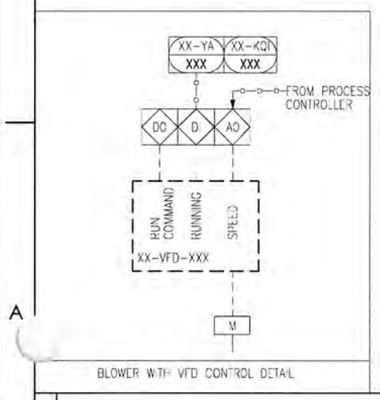

BLOWER WITH VFD CONTROL DETAIL

PROCESS BLOWER INFO	
NO OF DUTY BLOWERS	2
NO of STANDBY BLOWER	1
TOTAL # OF BLOWERS	3
TAG NUMBERS	16-B-401-A/B/C
BLOWER RATED CAPACITY	1,950 SCFM AT 9.0 PSIG
TYPE OF BLOWER	POSITIVE DISPLACEMENT
BLOWER ENCLOSURE INCLUDED	YES, WITH SPACE HEATER
SPEED CONTROL	VFD
ELECTYRIC MOTOR	TEFC, 125 HP AT 1800 RPM
VOLTAGE	480V/3PH/60HZ

REFERENCE ONLY DO NOT USE FOR CONSTRUCTION

REV	DESCRIPTION	ECO	DWN	APPR	APPR	DATE
A	INITIAL RELEASE		MR	KK	-	13 JUN 22

PROPRIETARY AND CONFIDENTIAL: THIS DRAWING AND ALL INFORMATION AND KNOWLEDGE CONTAINED OR REFERRED HEREIN ARE THE CONFIDENTIAL AND PROPRIETARY PROPERTY OF SUEZ AND AS SUCH ARE INSTRUMENTS OF SERVICE FOR USE SOLELY WITH RESPECT TO THIS PROJECT. THESE INSTRUMENTS OF SERVICE SHALL NOT BE REPRODUCED, TRANSMITTED, DISCLOSED OR USED OTHERWISE IN WHOLE OR IN PART, WITHOUT PRIOR WRITTEN AGREEMENT BY SUEZ AND MUST BE IMMEDIATELY RETURNED OR DESTROYED UPON REQUEST.

TOLERANCES UNLESS NOTED
DECIMALS ANGLES
.X
.XX FRAC
.XXX

CUSTOMER INFORMATION: CAESARS LANE WTF MBR SYSTEM

P&ID, BLOWER - PROCESS BLOWER

DRAWING NUMBER	REVISION
360077-WTS-PR-T02-8511-DS-002	A
REF.: -	DOC. OWNER:
PROJECT NO. 360077	PART/MATERIAL NO.
SCALE NONE	SIZE D
SHEET 2 OF 2	

FILE LOCATION: C:_ASSEVO\BIM\NAM\360077-Caesars Lane WWTP\1_PID\[360077-WTS-PR-T02-8511-DS-002.dwg]

AIR FROM 16-B-401

D | 360077-WTS-PR-T02-8511-DS-002 SHT 2 | 16"(400mm)-CS150A (SEE NOTE 4)

16"X10"

10"(250mm)-CS150A

10"X8"

8"(200mm) 16-HV-405-1

16-AA 405A-1 | 16-AIC 405A-1 | 16-AI 402-1 | 16-AA 402-1

AI | AI

16-AIT 405A-1

16-AIT 405A-1 | 16-AIT 402-1

DO METER RANGE: 0 TO 10 mg/L

pH SENSOR RANGE: 0-14 pH

16-LAHH 401-1

D

6-LSHH 401-1

(SEE NOTE 5)

RAS FROM 20-P-501

E | 360077-WTS-PR-T02-8511-DS-010 | 36"(900mm)-D150A

NaOH DOSING

F | 360077-WTS-PR-T02-8511-DS-011 SHT 2 | 1/2"(15mm)-PV080A

OVERFLOW WEIR

16-HV-409-1 DOWNWARD OPENING SLIDING GATE (BY OTHERS)

16-HV-416-1 DOWNWARD OPENING SLIDING GATE (BY OTHERS)

MIXED LIQUOR TO MEMBRANE TANK DISTRIBUTION CHANNEL

360077-WTS-PR-T02-8511-DS-004

FINE SCREENED WASTE WATER

BIOREACTOR SPLITTER BOX

ANOXIC MIXER

16-MX-211-1

FINE BUBBLE DIFFUSER GRID

CHANNEL

CHANNEL

ANOXIC ZONE

AEROBIC ZONE

K 6"(150mm)-PV080

16-HV-408-1 6"(150mm) (BY OTHERS)

6"(150mm)-PV080

TO DRAIN (BY OTHERS)

BOUNDARY LINE: BIOLOGICAL REACTOR NO. 1

16"X10"

BIOLOGICAL REACTOR NO. 2
ALL EQUIPMENT IS THE SAME AS FOR NO. 1

BOUNDARY LINE: BIOLOGICAL REACTOR NO. 2

MIXED LIQUOR TO MEMBRANE TANK DISTRIBUTION CHANNEL

360077-WTS-PR-T02-8511-DS-004

16"X10"

BIOLOGICAL REACTOR NO. 3
ALL EQUIPMENT IS THE SAME AS FOR NO. 1

BOUNDARY LINE: BIOLOGICAL REACTOR NO. 3

MIXED LIQUOR TO MEMBRANE TANK DISTRIBUTION CHANNEL

360077-WTS-PR-T02-8511-DS-004

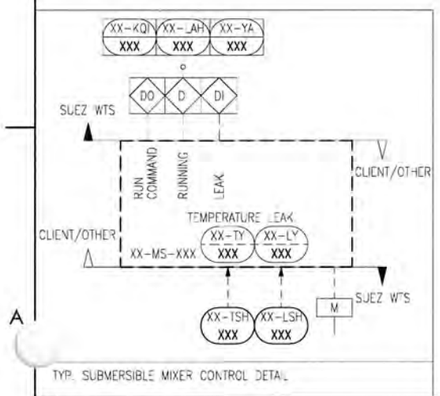

TYP. SUBMERSIBLE MIXER CONTROL DETAIL

EQYUIPMENT DATA	
ANOXIC ZONE PER TRAIN	
MIXER	MECHANICAL, SUBMERSIBLE
NUMBER OF DUTY MIXERS	1
MIXER TAG	16-MX-211-X
MIXER MOTOR	TEFC, 8.0 HP AT 571 RPM
VOLTAGE	480 V/3 ph/ 60 Hz
AEROBIC ZONE PER TRAIN	
DIFFUSERS	FINE-BUBBLE
TYPE OF DIFFUSERS	DISC DIFFUSER
# OF GRIDS	1 (FULL FLOOR COVERAGE)

BIOREACTOR TANK DATA	
# OF TRAINS	3
TANK MATERIAL	CONCRETE
TAG NUMBER	
ANOXIC ZONE	16-TK-201-X
AEROBIC ZONE	16-TK-401-X
OPERATING VOLUME, GALLONS	
ANOXIC ZONE, TOTAL	333,300
AEROBIC ZONE, TOTAL	850,000
TANK INTERNAL DIMENSIONS, FT	
ANOXIC ZONE, EACH	
LENGTH	34.5
WIDTH	24
SIDE WATER DEPTH	18
AEROBIC ZONE, EACH	
LENGTH	74
WIDTH	24
SIDE WATER DEPTH	17.5

NOTES:

1. ALL DOTTED-LINE EQUIPMENT TO BE SUPPLIED BY OTHERS. VERIFICATION OF ANY POSTED VALUES IS THE RESPONSIBILITY OF THE SYSTEM INTEGRATOR.
2. SCOPE BY OTHERS: ALL CONCRETE WORKS, CHANNELS, SLUICE GATES, EMERGENCY OVERFLOW, TANK COVERS, HANDRAILS, ANY DRAINS, ETC.
3. DRAWING TYPICAL FOR EVERY BIOLOGICAL TRAINS, WITH EXCEPTION OF COMMON CHANNELS.
4. A PORTION OF THE AIR LINE NEEDS TO BE ROUTED A MINIMUM OF 2 FT (60 CM) ABOVE MAXIMUM LIQUID LEVEL IN TANK BEING AERATED TO PREVENT WATER BACK FLOW.
5. 16-LSHH-401 IS PLACED 1 FT (30 CM) BELOW THE TOP OF TANK.
6. ALL EQUIPMENT ON THIS SHEET INSIDE THE BIOLOGICAL TANKS TO 18 INCH ABOVE THE TOP OF THE TANKS ARE CLASS 1 DIVISION 2 RATED (PER NFPA 820).
7. FOR CLARITY, DRAIN LINES FOR BIOLOGICAL TANKS ARE NOT SHOWN.
8. FINAL SIZING AND DESIGN TO BE VERIFIED DURING DETAILED PROJECT ENGINEERING.

REFERENCE ONLY DO NOT USE FOR CONSTRUCTION

REV	DESCRIPTION	ECO	DWN	APPR	APPR	DATE
A	INITIAL RELEASE	-	MR	KK		13 JUN 22

PROPRIETARY AND CONFIDENTIAL: THIS DRAWING AND ALL INFORMATION AND KNOWLEDGE CONTAINED OR REFERRED HEREIN ARE THE CONFIDENTIAL AND PROPRIETARY PROPERTY OF SUEZ AND AS SUCH ARE INSTRUMENTS OF SERVICE FOR USE SOLELY WITH RESPECT TO THIS PROJECT. THESE INSTRUMENTS OF SERVICE SHALL NOT BE REPRODUCED, TRANSMITTED, DISCLOSED OR USED OTHERWISE IN WHOLE OR IN PART, WITHOUT PRIOR WRITTEN AGREEMENT BY SUEZ AND MUST BE IMMEDIATELY RETURNED OR DESTROYED UPON REQUEST.

TOLERANCES UNLESS NOTED
DECIMALS .X .XX .XXX
ANGLES
FRAC

CUSTOMER INFORMATION

CAESARS LANE WTF
MBR SYSTEM

P&ID

BIOREACTOR

DRAWING NUMBER	REVISION
360077-WTS-PR-T02-8511-DS-003	A

REF.: -

DOC. OWNER:

PROJECT NO.	PART/MATERIAL NO.	SCALE	SIZE	SHEET
360077		NONE	D	1 OF 1

FILE LOCATION: C:_ADSKVault\NAM\HOU\360077-Caesars Lane WWTP\1_P&ID\pnid Files\360077-WTS-PR-T02-8511-DS-003.dwg

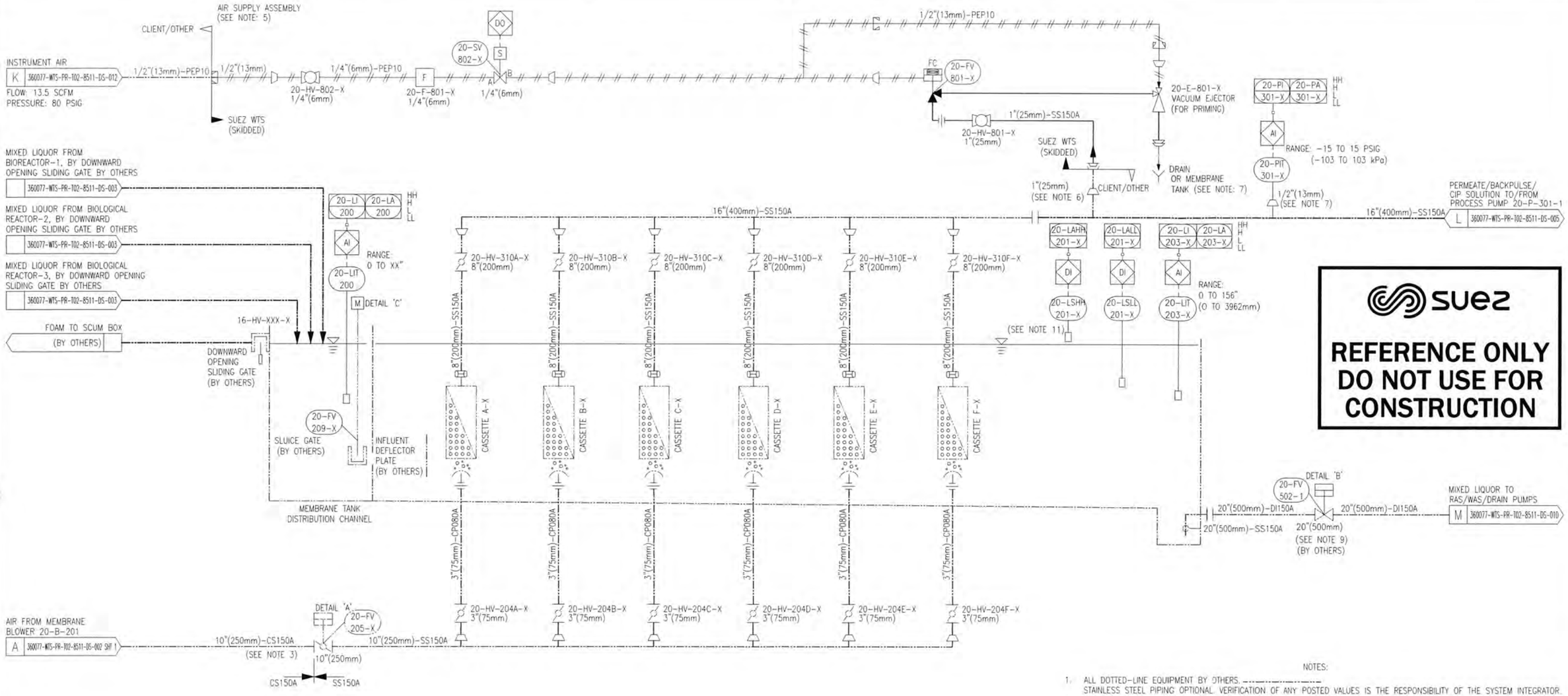

DETAIL 'A'

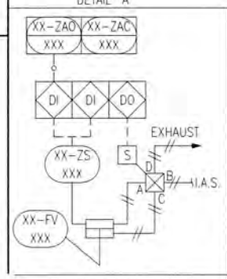

TYP. PNEUMATIC VALVE LIMIT SWITCHES CONTROL DETAIL

DETAIL 'B'

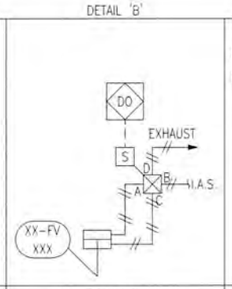

TYP. PNEUMATIC VALVE CONTROL DETAIL

DETAIL 'C'

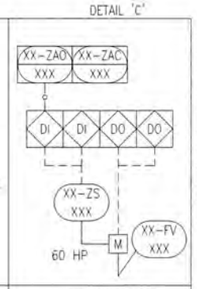

TYP. MOTORIZED VALVE CONTROL DETAIL

MEMBRANE TANK DATA		
# OF TRAINS,	4	–
TAG NUMBERS	20-TK-201-1/2/3/4	–
TANK MATERIAL	CONCRETE	–
INTERNAL LENGTH	480"	INCH
INTERNAL WIDTH	96"	INCH
TOTAL DEPTH	156"	INCH
MAX OPERATING LIQUID LEVEL	128"	INCH
MIN OPERATING LIQUID LEVEL	108"	INCH
CLEANING LEVEL	95"	INCH
TOP OF FIBERS (LSL) ELEVATION	92.3"	INCH

MEMBRANE DATA	
CASSETTE AND MODULE SERIES	ZW500 – LEAP
MODULE SURFACE AREA	530 FT2
MAX # OF MEMBRANE MODULES PER CASSETTE	64
# OF CASSETTE SPACES PER TANK	6
MAX # OF MEMBRANE MODULES PER TANK	384
TOTAL # OF MODULES INSTALLED PER TRAIN	352
TOTAL # OF MODULES INSTALLED PER PLANT	1408
TOTAL # OF CASSETTES INSTALLED PER PLANT	24
SPARE SPACE	8.3%

NOTES:

1. ALL DOTTED-LINE EQUIPMENT BY OTHERS. STAINLESS STEEL PIPING OPTIONAL. VERIFICATION OF ANY POSTED VALUES IS THE RESPONSIBILITY OF THE SYSTEM INTEGRATOR.
2. DRAWING TYPICAL FOR EACH MEMBRANE TRAIN WITH EXCEPTION OF THE COMMON CHANNEL. THERE ARE 4 MEMBRANE TRAINS IN TOTAL, X = 1, 2, 3 AND 4.
3. A PORTION OF THE AIR LINE NEEDS TO BE ROUTED A MINIMUM OF 2 FT (610 MM) ABOVE MAXIMUM LIQUID LEVEL IN TANK BEING AERATED TO PREVENT WATER BACK FLOW.
4. ALL EQUIPMENT ON THIS SHEET IS DESIGNED TO BE INSTALLED IN A NON-CLASSIFIED AREA (PER NFPA 820).
5. BOTH EJECTOR AND INSTRUMENT AIR SUPPLY ASSEMBLIES ARE TO BE LOCATED INDOORS OR TO BE TEMPERATURE AND UV PROTECTED.
6. CONNECTION TO BE PROVIDED AT HIGHEST POINT ON PIPING BETWEEN PERMEATE HEADER AND PUMP.
7. AIR GAP IS REQUIRED ON EJECTOR DISCHARGE LINE EXHAUST TO MEMBRANE TANK OR DRAIN.
8. KNIFE GATE VALVES ARE RECOMMENDED FOR ALL WASTE WATER AND SLUDGE APPLICATIONS. UNDER CERTAIN CIRCUMSTANCES, BUTTERFLY VALVES COULD BE ACCEPTABLE; THIS WILL BE A MUTUAL DECISION BETWEEN CUSTOMER AND SUEZ ENGINEERS.
9. TANK RAS/WAS/DRAIN VALVES ARE RECOMMENDED TO BE FULL LUG STYLE.
10. MEMBRANE TANK SPLITTER CHANNEL IS COMMON FOR ALL TRAINS, AND PROVIDES A HYDRAULIC LINK AND EVEN DISTRIBUTION.
11. LEVEL SWITCH IS PLACED 1 FT BELOW THE TOP OF THE TANK.
12. TANK COVERS(BY OTHERS) ARE REQUIRED; NOT SHOWN FOR CLARITY.
13. BASED ON ADDENDUM #1 DATED JUNE 29,2022, ALL VALVES AND PIPING INSIDE MEMBRANE TANKS ARE BY THE CONTRACTOR.
14. FINAL SIZING AND DESIGN TO BE VERIFIED DURING DETAILED PROJECT ENGINEERING.

REFERENCE ONLY DO NOT USE FOR CONSTRUCTION

REV	DESCRIPTION	ECO	DWN	APPR	APPR	DATE
A	INITIAL RELEASE	-	MR	KK		14 JUN 22

TOLERANCES UNLESS NOTED
DECIMALS .X .XX .XXX
ANGLES
FRAC

PROPRIETARY AND CONFIDENTIAL: THIS DRAWING AND ALL INFORMATION AND KNOWLEDGE CONTAINED OR REFERRED HEREIN ARE THE CONFIDENTIAL AND PROPRIETARY PROPERTY OF SUEZ AND AS SUCH ARE INSTRUMENTS OF SERVICE FOR USE SOLELY WITH RESPECT TO THIS PROJECT. THESE INSTRUMENTS OF SERVICE SHALL NOT BE REPRODUCED, TRANSMITTED, DISCLOSED OR USED OTHERWISE IN WHOLE OR IN PART, WITHOUT PRIOR WRITTEN AGREEMENT BY SUEZ AND MUST BE IMMEDIATELY RETURNED OR DESTROYED UPON REQUEST.

CUSTOMER INFORMATION

CAESARS LANE WTF
MBR SYSTEM

P&ID,

PRIMARY MEMBRANE TANK

DRAWING NUMBER	REVISION
360077-WTS-PR-T02-8511-DS-004	A

REF.: -
DOC. OWNER:

PROJECT NO.	PART/MATERIAL NO.	SCALE	SIZE	SHEET
360077		NONE	D	1 OF 1

LAST SAVED: Thursday, July 21, 2022 11:15:33 AM

FILE LOCATION: C:_ASSR\Vault\VAAR-ED\360077\Content Center Files\P&ID\360077-WTS-PR-T02-8511-DS-004.dwg

NOTES:

1. ALL DOTTED LINES/EQUIPMENT BY OTHERS _____
2. DRAWING TYPICAL FROM EACH TRAIN. THERE ARE 4 TRAINS IN TOTAL, X=1,2,3 AND 4
3. 5 PIPE DIAMETERS UPSTREAM, 3 PIPE DIAMETERS DOWNSTREAM, STRAIGHT PIPE RUN RECOMMENDED FOR MAXIMUM ACCURACY.
4. VALVE 20-HV-303-X TO BE CLOSED DURING GLYCERINE REMOVAL.
5. DEGASSING COLUMN FOR STABLE TURBIDITY ANALYSIS, 3 INCH IN DIAMETER X 30.5' LENGTH.

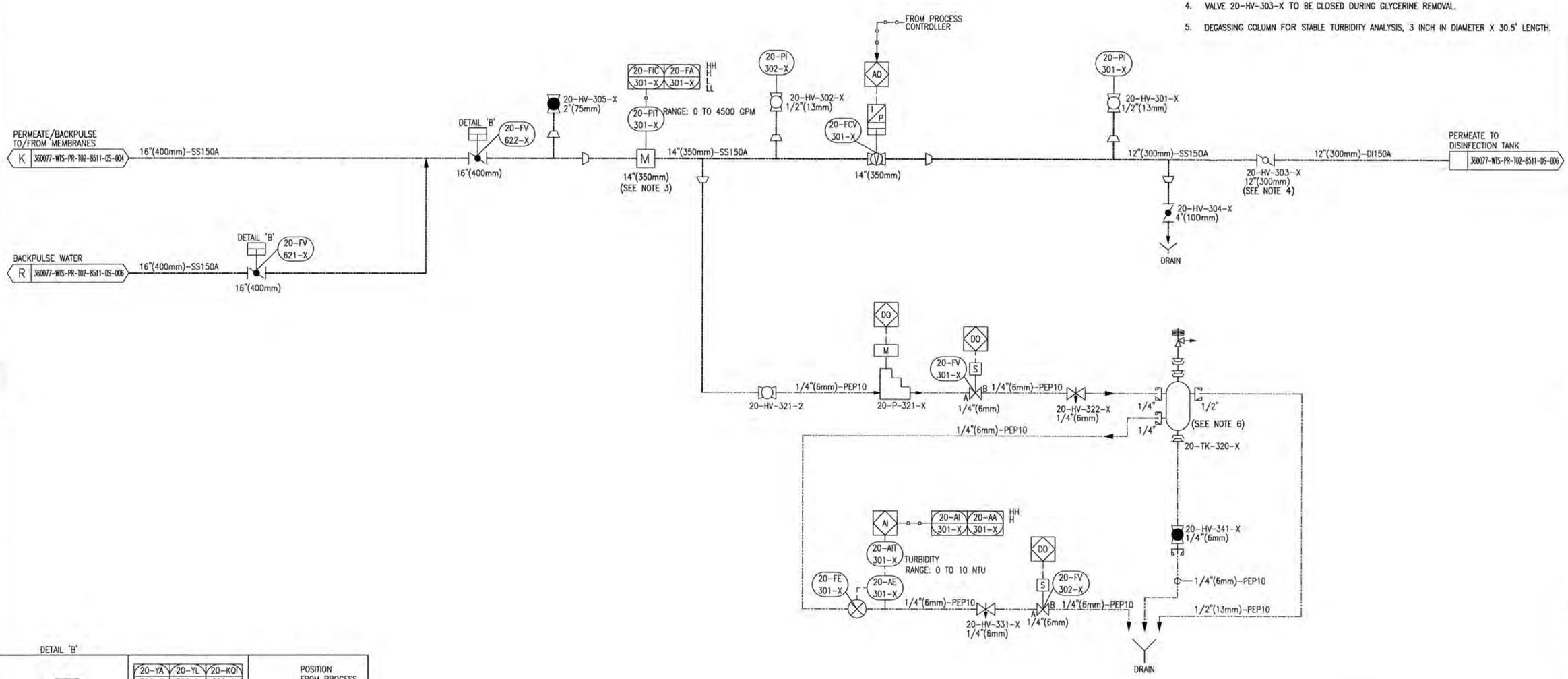

TYP. PNEUMATIC ACTUATED VALVE CONTROL DETAIL

TYP. SAMPLE PUMP CONTROL DETAIL

TYP. FLOW CONTROL VALVE

SAMPLE PUMP DATA	
NO OF DUTY PUMPS	4
TAG NUMBERS (INSTALLED)	20-P-321-X
TYPE OF PUMP	METERING
PUMP CAPACITY	0.1 GPM
ELECTRIC MOTOR	TEFC, 0.2 HP AT 1,775 RPM
VOLTAGE	120V/1PH/60HZ

suez

REFERENCE ONLY DO NOT USE FOR CONSTRUCTION

REV	DESCRIPTION	ECO	DWN	APPR	APPR	DATE
A	INITIAL RELEASE	-	MR	KK		14 JUN 22

TOLERANCES UNLESS NOTED: DECIMALS .X .XX .XXX; ANGLES; FRAC

PROPRIETARY AND CONFIDENTIAL: THIS DRAWING AND ALL INFORMATION AND KNOWLEDGE CONTAINED OR REFERRED HEREIN ARE THE CONFIDENTIAL AND PROPRIETARY PROPERTY OF SUEZ AND AS SUCH ARE INSTRUMENTS OF SERVICE FOR USE SOLELY WITH RESPECT TO THIS PROJECT. THESE INSTRUMENTS OF SERVICE SHALL NOT BE REPRODUCED, TRANSMITTED, DISCLOSED OR USED OTHERWISE IN WHOLE OR IN PART, WITHOUT PRIOR WRITTEN AGREEMENT BY SUEZ AND MUST BE IMMEDIATELY RETURNED OR DESTROYED UPON REQUEST.

suez

CUSTOMER INFORMATION: CAESARS LANE WTF MBR SYSTEM

P&ID, PERMEATE SIPHON & ASSOC EQUIPMENT

DRAWING NUMBER: 360077-WTS-PR-T02-8511-DS-005 — REVISION: A

REF.: - — DOC. OWNER:

PROJECT NO.: 360077 — PART/MATERIAL NO. — SCALE: NONE — SIZE: D — SHEET: 1 OF 1

FILE LOCATION: C:_ADSKVault\NAM-ITO\360077-Caesars Lane WWTP\1. PPD and P&ID\360077-WTS-PR-T02-8511-DS-005.dwg

CITRIC ACID SOLUTION
FROM 23-P-301-1/2
360077-WTS-PR-T02-8511-DS-011
1"(25mm)-PVC080

23-HV-330
1"(25mm)
23-CV-330
1"(25mm)
23-FV
330-X
DETAIL 'B'
1"(25mm)

SODIUM HYPOCHLORITE SOLUTION
FROM 23-P-101-1/2
360077-WTS-PR-T02-8511-DS-011
1"(25mm)-CPVC080

23-HV-130
1"(25mm)
23-CV-130
1"(25mm)
23-FV
130-X
DETAIL 'B'
1"(25mm)

PERMEATE FROM PERMEATE
SIPHON SYSTEMS
360077-WTS-PR-T02-8511-DS-005
12"(300mm)-DI150A

20-TI
301
AI
RANGE: 0-40°C
20-TIT
301
20-TW
301

20-FI
602
20-FA
602
HH
H
L
LL
AI
RANGE: 0-4500 GPM
20-FIT
602
20-PI
602
20-HV-606
1/2"(13mm)
16"(400mm)-SS150A
M
14"(350mm)
20-FV
601
DETAIL 'B'
20-FV-601
16"(400mm)

20-PAH
601
DI
S.P.= TBD
INCREASING/
DECREASING
20-PSH
601
20-PAH
602
DI
S.P.= TBD
INCREASING/
DECREASING
20-PSH
602
16"(400mm)-SS150A
16"(400mm)-PV-AWWA-C900
(UNDERGROUND PIPING)
20-SCN-600
BUCKET SCREEN
(2mm OPENING)
16"(400mm)-SS150A

PERMEATE BACK
TO MEMBRANE TANK
360077-WTS-PR-T02-8511-DS-005
16"(400mm)-SS150A

20-HV-610-1
16"(400mm)
20-HV-610-2
16"(400mm)
20-LI
601
20-LA
601
HH
H
L
LL
AI
RANGE: TBD
20-LIT
601
16"(400mm)
20-CV-602-1
16"(400mm)
20-CV-602-2
16"(400mm)
30"(750MM)-DI150A

TO CHLORINATION/
DECHLORINATION TANK

20-P-610-1/2
BACKPULSE PUMPS
20-TK-600
BACKPULSE TANK
PORTION OF CHLORINATION/DECHLORINATION TANK

BACKPULSE PUMP DATA	
NO OF DUTY PUMP	1
NO OF STANDBY PUMP	1
TAG NUMBERS	20-P-610-1/2
TYPE OF PUMP	SUBMERSIBLE PUMP
INSTALLATION	VERTICAL
PUMP CAPACITY	3,355 GPM @ 44' FT TDH
SPEED CONTROL	VFD
ELECTRIC MOTOR	TEFC, 57.6 HP AT 1,190 RPM

DETAIL 'B'

XX-YA
XX-KQ
FROM
PROCESS
CONTROLLER
DO
DI
AO
(SEE NOTE 6)
RUN
COMMAND
RUNNING
SPEED
XX-SK
XX-VFD-XXX
M

TYP. BACKPULSE PUMPS
CONTROL DETAIL

DO
EXHAUST
S
D
B
A
C
IAS
20-FV
XXX-X

TYP. PNEUMATIC ACTUATED
VALVE CONTROL DETAIL

REFERENCE ONLY
DO NOT USE FOR
CONSTRUCTION

REV	DESCRIPTION	ECO	DWN	APPR	APPR	DATE
A	INITIAL RELEASE	-	MR	KK		14 JUN 22

PROPRIETARY AND CONFIDENTIAL: THIS DRAWING AND ALL INFORMATION AND KNOWLEDGE CONTAINED OR REFERRED HEREIN ARE THE CONFIDENTIAL AND PROPRIETARY PROPERTY OF SUEZ AND AS SUCH ARE INSTRUMENTS OF SERVICE FOR USE SOLELY WITH RESPECT TO THIS PROJECT. THESE INSTRUMENTS OF SERVICE SHALL NOT BE REPRODUCED, TRANSMITTED, DISCLOSED OR USED OTHERWISE IN WHOLE OR IN PART, WITHOUT PRIOR WRITTEN AGREEMENT BY SUEZ AND MUST BE IMMEDIATELY RETURNED OR DESTROYED UPON REQUEST.

TOLERANCES UNLESS NOTED
DECIMALS ANGLES
.X
.XX FRAC
.XXX

CUSTOMER INFORMATION
CAESARS LANE WTF
MBR SYSTEM

P&ID,
CIP / BP SYSTEM

DRAWING NUMBER: 360077-WTS-PR-T02-8511-DS-006
REVISION: A
REF.: -
DOC. OWNER:
PROJECT NO.: 360077
PART/MATERIAL NO.:
SCALE: NONE
SIZE: D
SHEET: 1 OF 1

FILE LOCATION: C:_ADSKVault\NAM-IFD\360077-Caesars Lane WWTP\1. PID and P&ID\360077-WTS-PR-T02-8511-DS-006.dwg

NOTES:

1. ALL DOTTED-LINE EQUIPMENT BY OTHERS. STAINLESS STEEL PIPING OPTIONAL. VERIFICATION OF ANY POSTED VALUES IS THE RESPONSIBILITY OF THE SYSTEM INTEGRATOR.
2. FLOOR DRAINS TO BE PROVIDED AND PIPED INTO BY GENERAL CONTRACTOR, AS REQUIRED.
3. DESIGN ENGINEER TO ENSURE THERE IS ENOUGH BACKPRESSURE IN THIS LINE TO ALLOW FOR WAS REMOVAL.
4. FOLLOW MANUFACTURER'S RECOMMENDATION REGARDING INSTALLATION REQUIREMENTS, INCLUDING NUMBER OF STRAIGHT PIPE RUNS. PIPING MUST BE ARRANGED SO MAG IS ALWAYS FLOODED.
5. ALL EQUIPMENT ON THIS SHEET IS DESIGNED TO BE INSTALLED IN A NON-CLASSIFIED AREA (PER NFPA 820).
6. FINAL SIZING AND DESIGN TO BE VERIFIED DURING DETAILED PROJECT ENGINEERING.

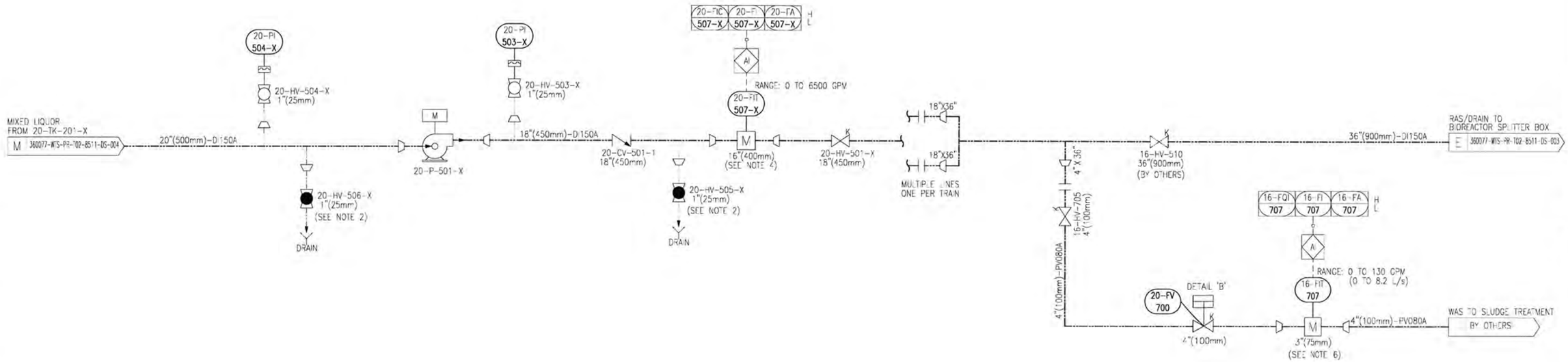

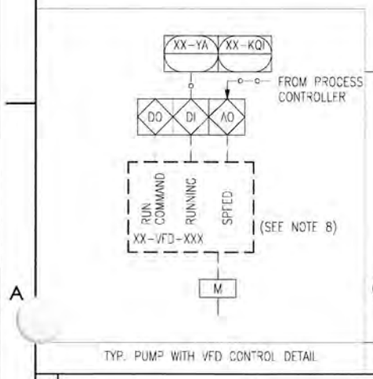

TYP. PUMP WITH VFD CONTROL DETAIL

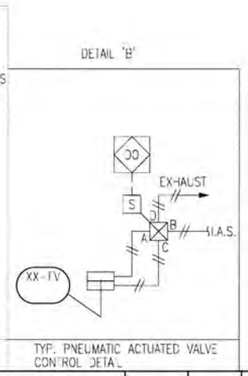

TYP. PNEUMATIC ACTUATED VALVE CONTROL DETAIL

RAS/WAS/DRAIN PUMP DATA	
NO OF DUTY PUMP	4
NO OF STANDBY PUMP	0
TAG NUMBERS	20-P-501-1/2/3/4
TYPE OF PUMP	END-SUCTION CENTRIFUGAL
PUMP CAPACITY	2,865-5,729 GPM @ 10-20 FT TDH
SPEED CONTROL	VFD
ELECTRIC MOTOR	TEFC, 40.0 HP AT 590 RPM
VOLTAGE	480V/3PH/60HZ

REFERENCE ONLY DO NOT USE FOR CONSTRUCTION

REV	DESCRIPTION	ECO	DWN	APPR	APPR	DATE
A	INITIAL RELEASE	-	MR	KK		14 JUN 22

PROPRIETARY AND CONFIDENTIAL: THIS DRAWING AND ALL INFORMATION AND KNOWLEDGE CONTAINED OR REFERRED HEREIN ARE THE CONFIDENTIAL AND PROPRIETARY PROPERTY OF SUEZ AND AS SUCH ARE INSTRUMENTS OF SERVICE FOR USE SOLELY WITH RESPECT TO THIS PROJECT. THESE INSTRUMENTS OF SERVICE SHALL NOT BE REPRODUCED, TRANSMITTED, DISCLOSED OR USED OTHERWISE IN WHOLE OR IN PART, WITHOUT PRIOR WRITTEN AGREEMENT BY SUEZ AND MUST BE IMMEDIATELY RETURNED OR DESTROYED UPON REQUEST.

TOLERANCES UNLESS NOTED
DECIMALS .X .XX .XXX
ANGLES
FRAC

CUSTOMER INFORMATION: CAESARS LANE WTF MBR SYSTEM

P&ID: RAS/WAS/DRAIN PUMP

DRAWING NUMBER	REVISION
360077-WTS-PR-T02-8511-DS-010	A

REF.: -
DOC. OWNER:

PROJECT NO.	PART/MATERIAL NO.	SCALE	SIZE	SHEET
360077		NONE	D	1 OF 1

FILE LOCATION: C:\...\360077-WTS-PR-T02-8511-DS-010.dwg

NOTES:

1. ALL DOTTED LINES/EQUIPMENT BY OTHERS
2. ALL SYSTEM COMPONENTS PRESENTED ON THIS DRAWING ARE WALL MOUNTED.
3. ALL EQUIPMENT DESIGNED TO BE INSTALLED IN NON-CLASSIFIED AREA (PER NFPA 820).
4. VENT ALL CHEMICAL TANKS APPROPRIATELY.
5. CHEMICAL CONTAINMENT BY OTHERS.
6. FINAL SIZING AND DESIGN TO BE VERIFIED DURING DETAILED PROJECT ENGINEERING.

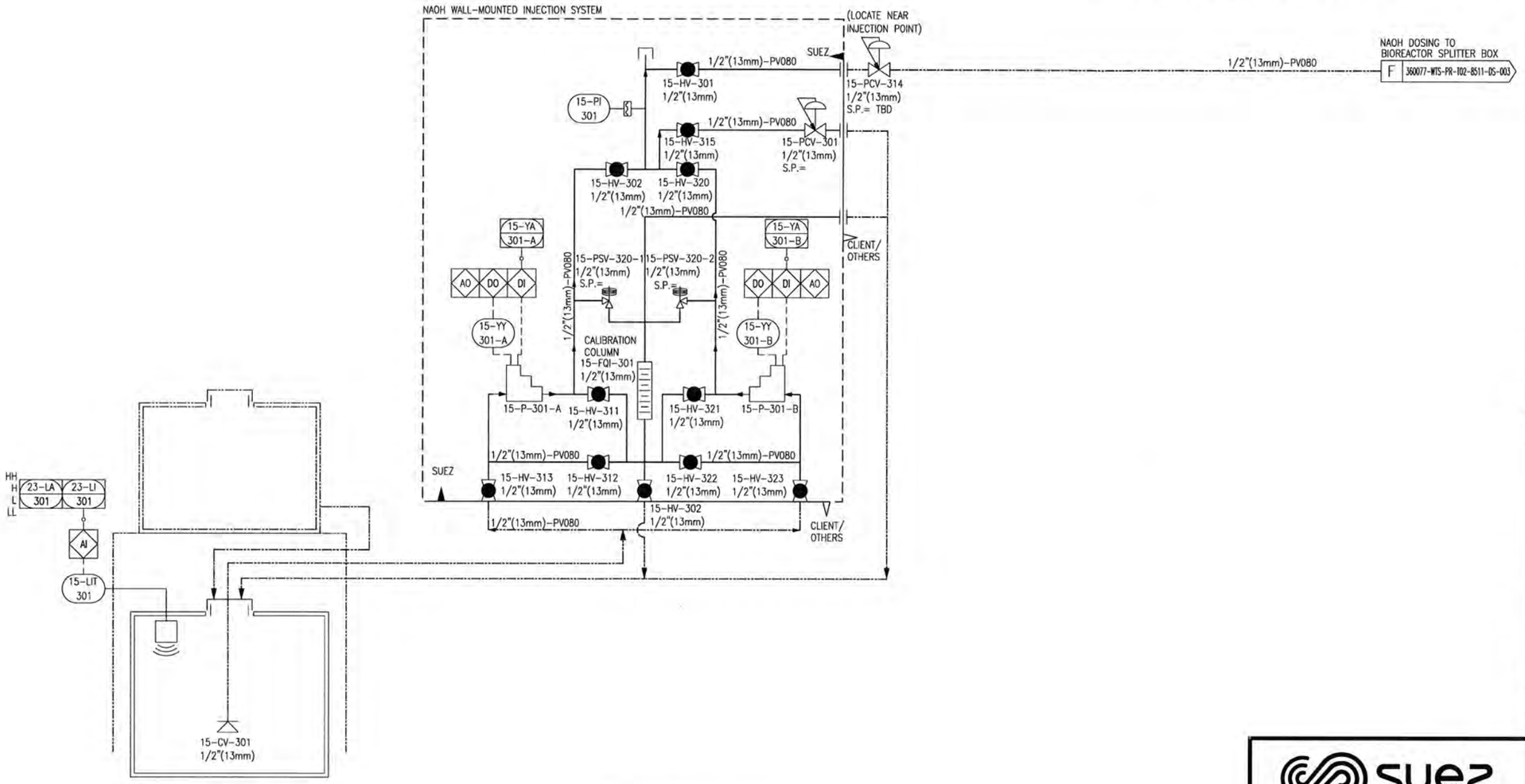

ALKALINITY PUMP DATA	
TAG NUMBERS	15-P-301-A/B
# OF PUMPS	1 DUTY / 1 STANDBY
DESIGN FLOW AND PRESSURE	TBD
MAX. FLOW AND PRESSURE	TBD
VOLTAGE	120 VAC/ 1 ph/ 60 Hz
SUPPLIER, MODEL	PROMINENT

suez

REFERENCE ONLY DO NOT USE FOR CONSTRUCTION

REV	DESCRIPTION	ECO	DWN	APPR	APPR	DATE
A	INITIAL RELEASE		MR	KK	-	14 JUN 22

TOLERANCES UNLESS NOTED: DECIMALS .X .XX .XXX; ANGLES; FRAC

PROPRIETARY AND CONFIDENTIAL: THIS DRAWING AND ALL INFORMATION AND KNOWLEDGE CONTAINED OR REFERRED HEREIN ARE THE CONFIDENTIAL AND PROPRIETARY PROPERTY OF SUEZ AND AS SUCH ARE INSTRUMENTS OF SERVICE FOR USE SOLELY WITH RESPECT TO THIS PROJECT. THESE INSTRUMENTS OF SERVICE SHALL NOT BE REPRODUCED, TRANSMITTED, DISCLOSED OR USED OTHERWISE IN WHOLE OR IN PART, WITHOUT PRIOR WRITTEN AGREEMENT BY SUEZ AND MUST BE IMMEDIATELY RETURNED OR DESTROYED UPON REQUEST.

suez

CUSTOMER INFORMATION: CAESARS LANE WTF MBR SYSTEM

P&ID, CHEMICAL DOSING SYSTEM BIOLOGICAL PROCESS

DRAWING NUMBER: 360077-WTS-PR-T02-8511-DS-011 — REVISION: A

REF.: - DOC. OWNER:

PROJECT NO.: 360077 — PART/MATERIAL NO.: — SCALE: NONE — SIZE: D — SHEET: 1 OF 2

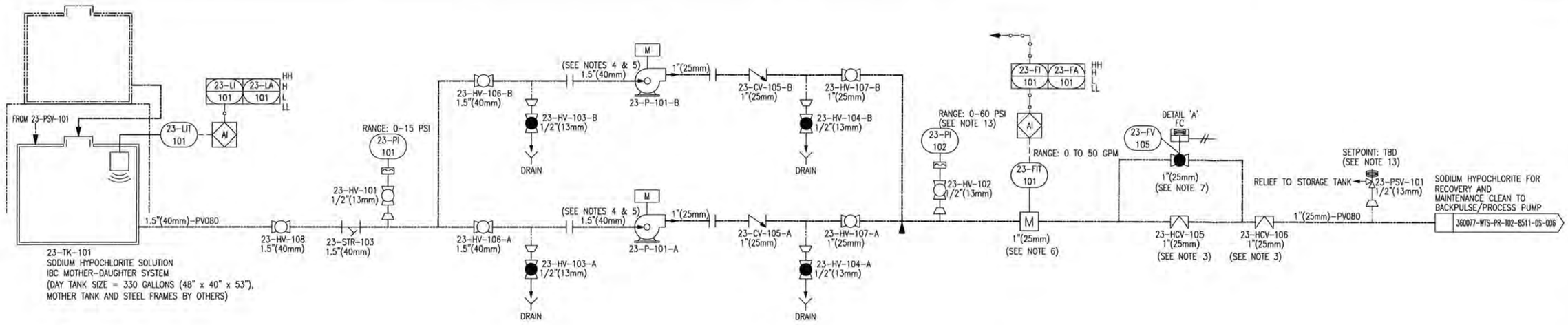

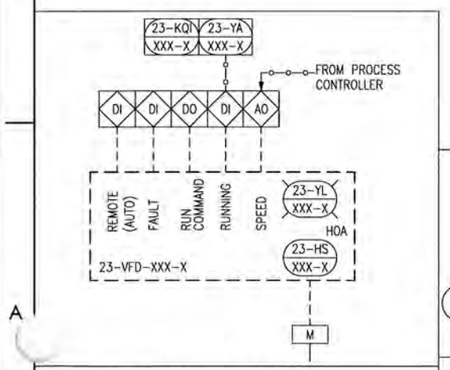

TYP. PUMP CONTROL VFD DETAIL

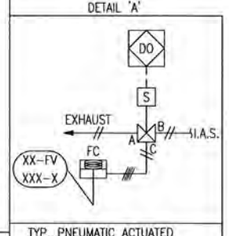

TYP. PNEUMATIC ACTUATED VALVE CONTROL DETAIL

GENERAL PUMP INFO	
SODIUM HYPOCHLORITE	12.0% w/w
NO. OF DUTY PUMPS	1
NO OF STANDBY PUMPS	1
NO. OF SHELF SPARE PUMPS	1 (SEE NOTE 11)
TYPE OF PUMP	END-SUCTION CENTRIFUGAL
TAG NUMBERS (INSTALLED)	23-P-101-A/B
SPEED CONTROL	VFD
ELECTRIC MOTOR	1.0HP @ 3450RPM
VOLTAGE	460 V/3 ph/60 Hz
PUMP MODEL	DB9V-R-FF-M219

	DESIGN FLOW
CAPACITY	0.5 - 20 GPM

	DESIGN PRESSURE
MAX HEAD	66 FT
MIN HEAD	58 FT

GENERAL PUMP INFO	
CITRIC ACID	50% w/w
NO OF DUTY PUMPS	1
NO OF STANDBY PUMPS	1
NO. OF SHELF SPARE PUMPS	1 (SEE NOTE 11)
TYPE OF PUMP	END-SUCTION CENTRIFUGAL
TAG NUMBERS (INSTALLED)	23-P-301-A/B
SPEED CONTROL	VFD
ELECTRIC MOTOR	1.0HP @ 3450RPM
VOLTAGE	460 V/3 ph/60 Hz
PUMP MODEL	DB9V-R-FF-M219

	DESIGN FLOW
CAPACITY	0.5 - 20 GPM

NOTES: (REVIEW AND REMOVE BEFORE EXTERNAL RELEASE)

1. ALL DOTTED-LINE EQUIPMENT NOT SUPPLIED BY SUEZ. VERIFICATION OF ANY POSTED VALUES IS THE RESPONSIBILITY OF THE SYSTEM INTEGRATOR.
2. DRAINS FROM SODIUM HYPOCHLORITE SOLUTION AND ANY ACID SOLUTION SHOULD NOT BE MIXED.
3. 23-HCV-105/305 TO BE ADJUSTED FOR MAINTENANCE CLEAN FLOW. 23-HCV-106/306 TO BE ADJUSTED FOR RECOVERY CLEAN FLOW. IF THERE IS ONLY RECOVERY CLEAN FLOW THEN 23-HCV-105/305 AND 23-FV-105/305 CAN BE REMOVED.
4. BOTTOM CONNECTION FROM THE TANK IS MANDATORY. FLOODED SUCTION SETUP REQUIRED FOR PUMP OPERATION.
5. REFER TO MANUFACTURER'S I&O MANUAL FOR PIPING AND INSTALLATION REQUIREMENTS.
6. ALL EQUIPMENT ON THIS SHEET IS DESIGNED TO BE INSTALLED IN A NON-CLASSIFIED AREA (PER NFPA 820).
7. VALVE TO OPEN ONLY FOR RECOVERY CLEAN PROCESS.
8. TANK DESIGN, INCLUDING SECONDARY CONTAINMENT AND VENTING IF REQUIRED, IS BY OTHERS.
9. FLOOR DRAINS TO BE PROVIDED AND PIPED INTO BY GENERAL CONTRACTOR, AS REQUIRED.
10. OUTDOOR PIPING/EQUIPMENT TO BE HEAT-TRACED AND INSULATED BY OTHERS.
11. EQUIPMENT AND ENVIRONMENTAL PROTECTION, IF REQUIRED, IS BY OTHERS.
12. GASKETS AND HARDWARE SHOULD BE COMPATIBLE WITH SELECTED CHEMICAL, (NOT PROVIDED BY SUEZ).
13. ALL BALL VALVES SUPPLIED FOR CHEMICALS ARE TO BE VENTED WITH VITON SEALS.
14. FINAL SIZING AND DESIGN TO BE VERIFIED DURING DETAILED PROJECT ENGINEERING.

REFERENCE ONLY DO NOT USE FOR CONSTRUCTION

REV	DESCRIPTION	ECO	DWN	APPR	APPR	DATE
A	INITIAL RELEASE		MR	KK	-	14 JUN 22

TOLERANCES UNLESS NOTED
DECIMALS .X .XX .XXX
ANGLES FRAC

PROPRIETARY AND CONFIDENTIAL: THIS DRAWING AND ALL INFORMATION AND KNOWLEDGE CONTAINED OR REFERRED HEREIN ARE THE CONFIDENTIAL AND PROPRIETARY PROPERTY OF SUEZ AND AS SUCH ARE INSTRUMENTS OF SERVICE FOR USE SOLELY WITH RESPECT TO THIS PROJECT. THESE INSTRUMENTS OF SERVICE SHALL NOT BE REPRODUCED, TRANSMITTED, DISCLOSED OR USED OTHERWISE IN WHOLE OR IN PART, WITHOUT PRIOR WRITTEN AGREEMENT BY SUEZ AND MUST BE IMMEDIATELY RETURNED OR DESTROYED UPON REQUEST.

CUSTOMER INFORMATION
CAESARS LANE WTF
MBR SYSTEM

P&ID
MEMBRANE CLEANING CHEM. SYSTEMS
CENTRIFUGAL, MAG DRIVE PUMP

DRAWING NUMBER	REVISION
360077-WTS-PR-T02-8511-DS-011	A
REF.: -	DOC. OWNER:
PROJECT NO. 360077	PART/MATERIAL NO.
SCALE: NONE	SIZE D
SHEET 2 OF 2	

RE:LOCATION: C:\...\360077-WTS-PR-T02-8511-DS-011.dwg

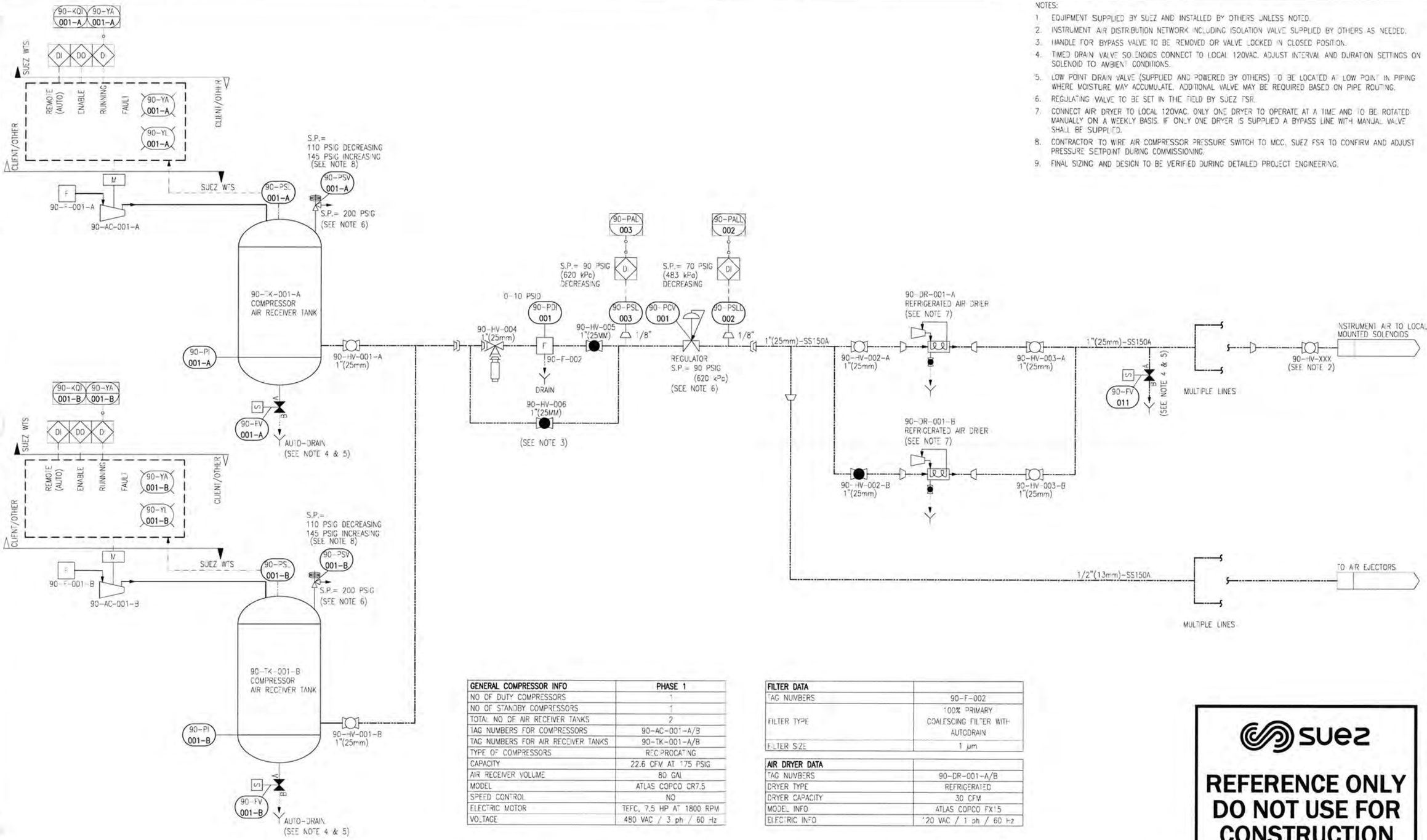

NOTES:

1. EQUIPMENT SUPPLIED BY SUEZ AND INSTALLED BY OTHERS UNLESS NOTED.
2. INSTRUMENT AIR DISTRIBUTION NETWORK INCLUDING ISOLATION VALVE SUPPLIED BY OTHERS AS NEEDED.
3. HANDLE FOR BYPASS VALVE TO BE REMOVED OR VALVE LOCKED IN CLOSED POSITION.
4. TIMED DRAIN VALVE SOLENOIDS CONNECT TO LOCAL 120VAC. ADJUST INTERVAL AND DURATION SETTINGS ON SOLENOID TO AMBIENT CONDITIONS.
5. LOW POINT DRAIN VALVE (SUPPLIED AND POWERED BY OTHERS) TO BE LOCATED AT LOW POINT IN PIPING WHERE MOISTURE MAY ACCUMULATE. ADDITIONAL VALVE MAY BE REQUIRED BASED ON PIPE ROUTING.
6. REGULATING VALVE TO BE SET IN THE FIELD BY SUEZ FSR.
7. CONNECT AIR DRYER TO LOCAL 120VAC. ONLY ONE DRYER TO OPERATE AT A TIME AND TO BE ROTATED MANUALLY ON A WEEKLY BASIS. IF ONLY ONE DRYER IS SUPPLIED A BYPASS LINE WITH MANUAL VALVE SHALL BE SUPPLIED.
8. CONTRACTOR TO WIRE AIR COMPRESSOR PRESSURE SWITCH TO MCC. SUEZ FSR TO CONFIRM AND ADJUST PRESSURE SETPOINT DURING COMMISSIONING.
9. FINAL SIZING AND DESIGN TO BE VERIFIED DURING DETAILED PROJECT ENGINEERING.

GENERAL COMPRESSOR INFO	PHASE 1
NO OF DUTY COMPRESSORS	1
NO OF STANDBY COMPRESSORS	1
TOTAL NO OF AIR RECEIVER TANKS	2
TAG NUMBERS FOR COMPRESSORS	90-AC-001-A/B
TAG NUMBERS FOR AIR RECEIVER TANKS	90-TK-001-A/B
TYPE OF COMPRESSORS	RECIPROCATING
CAPACITY	22.6 CFM AT 175 PSIG
AIR RECEIVER VOLUME	80 GAL
MODEL	ATLAS COPCO CR7.5
SPEED CONTROL	NO
ELECTRIC MOTOR	TEFC, 7.5 HP AT 1800 RPM
VOLTAGE	480 VAC / 3 ph / 60 Hz

FILTER DATA	
TAG NUMBERS	90-F-002
FILTER TYPE	100% PRIMARY COALESCING FILTER WITH AUTODRAIN
FILTER SIZE	1 µm

AIR DRYER DATA	
TAG NUMBERS	90-DR-001-A/B
DRYER TYPE	REFRIGERATED
DRYER CAPACITY	30 CFM
MODEL INFO	ATLAS COPCO FX15
ELECTRIC INFO	120 VAC / 1 ph / 60 Hz

REFERENCE ONLY DO NOT USE FOR CONSTRUCTION

REV	DESCRIPTION	ECO	DWN	APPR	APPR	DATE
A	INITIAL RELEASE	-	MR	KK	-	14 JUN 22

PROPRIETARY AND CONFIDENTIAL: THIS DRAWING AND ALL INFORMATION AND KNOWLEDGE CONTAINED OR REFERRED HEREIN ARE THE CONFIDENTIAL AND PROPRIETARY PROPERTY OF SUEZ AND AS SUCH ARE INSTRUMENTS OF SERVICE FOR USE SOLELY WITH RESPECT TO THIS PROJECT. THESE INSTRUMENTS OF SERVICE SHALL NOT BE REPRODUCED, TRANSMITTED, DISCLOSED OR USED OTHERWISE IN WHOLE OR IN PART, WITHOUT PRIOR WRITTEN AGREEMENT BY SUEZ AND MUST BE IMMEDIATELY RETURNED OR DESTROYED UPON REQUEST.

TOLERANCES UNLESS NOTED
DECIMALS: .X, .XX, .XXX
ANGLES: FRAC

CUSTOMER INFORMATION: CAESARS LANE WTF MBR SYSTEM

P&ID: AIR COMPRESSOR

DRAWING NUMBER: 360077-WTS-PR-T02-8511-DS-012
REVISION: A
REF.: -
DOC. OWNER:
PROJECT NO.: 360077
PART/MATERIAL NO.:
SCALE: NONE
SIZE: D
SHEET: 1 OF 1

RE:LOCATION: C:_ASSIGNED\FNAM-TO\360077-Caesars Lane WWTP\1- PID and P&ID\360077-WTS-PR-T02-8511-DS-012.dwg

3.f Typical MBR HMI Screen Layouts and Content

- **Typical comprehensive overview screen displaying key operational information with quick navigation to detailed screens**
- **Example of detailed train performance popup screen**

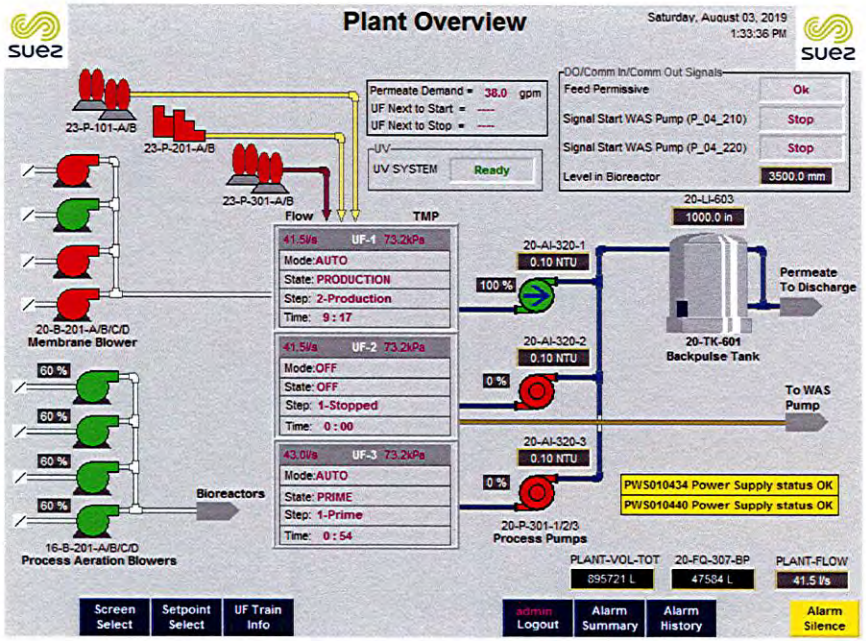

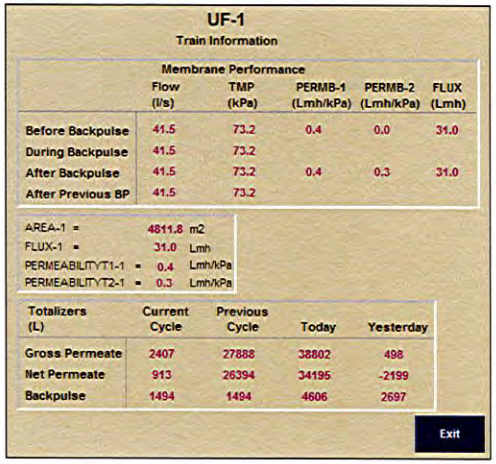

Typical HMI Screenshots

Typical MBR train screen, device control faceplate, and train control faceplate

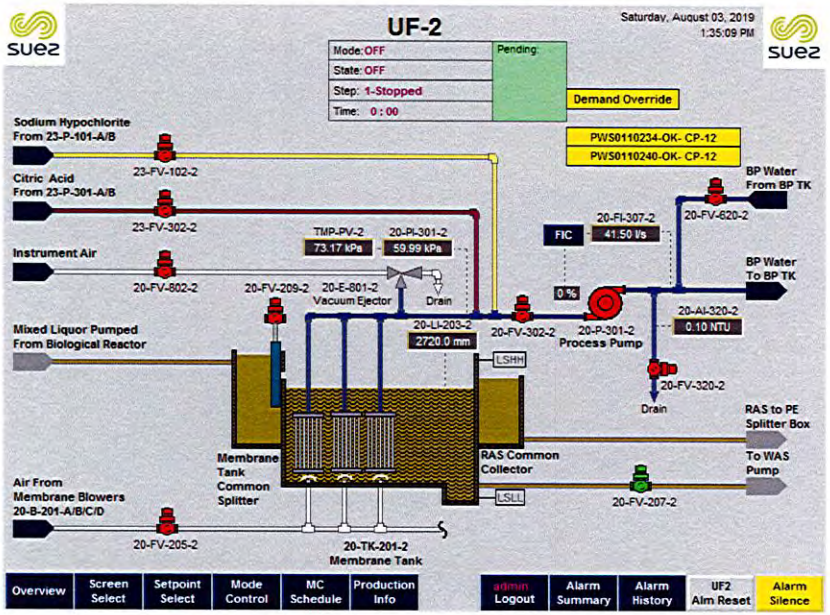





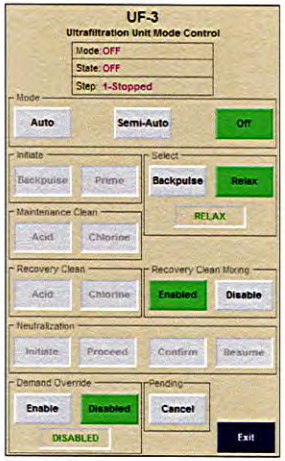

Note: future design standards incorporate ISA 101 and "High Performance HMI" principles

3.g BioWin Model

The native BioWin Models are stored in the USB enclosed in the bid package. The BioWin design summary reports are also included in the USB.

3.h Design Calculation Report

3.h.1 Membrane Surface Area, Membrane Bioreactor Tank Size

3.h.1.1 Membrane Surface Area

SUEZ's ZeeWeed 500 wastewater membrane will be used for this project. The flux selection is conservative and reflects years of full-scale experience and research and development. Similar design fluxes can be found in Section 2.d – Reference Installations.

Parameter	Unit	Flow Condition					
		ADF	MMF	MDF	PHF	MMF N-1	MDF N-1
Flow	mgd	**5**	**8**	**11**	**16**	**8**	**11**
Number of mem. trains in operation	#	3	4	4	4	3	3
Duration of the condition		No limit	≤ 30 days	≤ 1 day	≤ 1 hour	≤ 7 days	≤ 1 day
Minimum design temperature	°C	10					
SUEZ typical maximum allowable net flux	gfd	12.5	13.9	19.6	22.2	16.7	19.6
Selected net flux	gfd	8.9	10.7	14.7	22.1	14.3	19.6
Selected flux below Max flux by:	%	28.5	22.9	24.8	0.4	14.4	0
Membrane tank spare space	%	8.3					

As shown in the table above, the selected membrane design strikes a balance between providing flux 'bandwidth' during longer-duration flow conditions, such as ADF and MMF, while respecting flux cap requirements at the more intermittent but critical peak-flow and N-1 flow conditions. There is ~ 8% available membrane module space in each membrane tank for flux reduction if required. However, there is also "in-built spare space" in that there is the safety factor of sizing the membranes such that operating fluxes during sustained flow conditions are significantly lower than our guideline maximums for the minimum design temperature.

Presented below is a reverse calculation of the flows to demonstrate that with the selected net fluxes, the design flows will be achieved.

Parameter	Unit	Flow Condition					
		ADF	MMF	MDF	PHF	MMF N-1	MDF N-1
Selected net flux	gfd	8.9	10.7	14.7	22.1	14.3	19.6
Number of mem. trains in operation	#	3	4	4	4	3	3
Installed modules per train	#	352					
Membrane module area	ft^2	530					
Membrane area per train	ft^2	186,560					
Net flow per train	mgd	**1.66**	**2.0**	**2.75**	**4.13**	**2.66**	**3.67**
Plant flow	mgd	**5**	**8**	**11**	**16.5**	**8**	**11**

Each of the flows was calculated as follows:

Flow (mgd) = Flux (gfd) x Membrane Area (ft^2) / 1,000,000 (gal/Mgal).

As shown, the calculated net plant flows match the design flows.

3.h.1.2 Membrane Tank Size

To house 364 membrane modules per train we will use six (6) cassette frames, each of which can carry a maximum of 64 modules for a total maximum per train of 384 modules.

Each ZW500 cassette has dimensions of 84.1" (7') L x 68.7" (5.72') W x 107.7" (8.97') H.

Standard membrane tank dimensions SUEZ would propose for 6 x 64-module cassettes in this configuration, based on cassette dimensions, clearances around the cassettes, and sufficient space for appurtenances such as RAS piping inverts, air/permeate downcomers, etc., are:

- L = 40 feet
- W = 8 feet
- H = 13 feet

3.h.2 Flow, Flux, And Transmembrane Pressure (TMP) per Unit and Number of Units at Design Conditions Including ADF, PHF, MDF, MMAF, MLSS, and Water Temperature.

Per the request, all the indicated parameters are summarized in the table below.

Parameter	Unit	Flow Condition					
		ADF	MMF	MDF	PHF	MMF N-1	MDF N-1
Plant daily flow	mgd	**5**	**8**	**11**	**16.5**	**8**	**11**
Minimum design temperature	°C	10					
Number of mem. trains in operation	#	3	4	4	4	3	3
Resulting net flux	gfd	8.9	10.7	14.7	22.1	14.3	19.6
Design MLSS concentration	mg/L	10,625	10,625	12,750	12,750	11,900	12,750
TMP estimate at startup (avg.)	psi	**0.6**	**0.75**	**1.2**	**2**	**1.2**	**1.75**

3.h.3 Membrane Scour Air Flow and Pressure Requirements for Normal Operation, Backwashing, and Cleaning.

Per the request, all the indicated parameters are summarized in the table below.

Parameter	Unit	Flow Condition					
		ADF	MMF	MDF	PHF	MMF N-1	MDF N-1
Plant daily flow	mgd	**5**	**8**	**11**	**16.5**	**8**	**11**
Number of mem. trains in operation	#	3	4	4	4	3	3
Airflow – LEAP Lo or Hi	n/a	Lo	Lo	Hi	Hi	Hi	Hi
Airflow per train	scfm	674	674	1,348	1,348	1,348	1,348
Airflow per plant	scfm	2,022	2,696	5,392	5,392	4,044	4,044
Blower discharge pressure	psig	4.65	4.65	5.5	5.5	5.5	5.5

Please note that airflow/pressure during backpulsing or cleaning sequence (at their steps where aeration is required) will remain the same as in the preceding production cycle.

3.h.4 Description of the System Design Flexibility and Ability to Consistently Meet Permit and Redundancy Requirements over Range of Design Influent Flow and Load Conditions

The proposed system is specifically configured to meet the effluent requirements at both the design flows/loads (MMAF) as well as during more challenging peaking events such as MDF and PHF. As required, the biotreatment process was sized on Maximum Monthly Daily Flow and water quality characteristics, with a 13-day total aerobic solids retention time (SRT; counting aerobic tanks and membrane tanks). This SRT incorporates a safety factor of over 50% versus the recommended minimum SRT to achieve nitrification to less than 1 mg/L of ammonia-N at the 10 °C design temperature – i.e. below both the summer and winter treatment requirements of ≤ 1.2 and ≤ 1.8 mg/L ammonia-N. As such, the biological process design has the capacity to accommodate ammonia loads that may exceed the 'average' water quality design conditions. To be conservative, the performance of the biological treatment process under maximum day flow (MDF) was modelled in Biowin 6.2 assuming that the MMAF design influent concentrations apply – i.e. that the wastewater load increases linearly between MMAF and MDF flows. This is typically not the case, as the main causes of increased MDF flow, such as storm events and/or snowmelt, tend to result in dilution of the municipal wastewater, and influent loads of BOD_5, TSS, TKN, etc., that do not scale up in proportion to temporarily increased flow. At MDF, an aerobic SRT of 9 days is maintained, which represents – with 25% safety factor – the SRT required at 10 °C to achieve nitrification to < 1 mg/L of ammonia-N. Therefore, even if the maximum day flow was to occur at the minimum wastewater temperature with a conservatively high load of ammonia, the biological treatment system is sized to meet the stricter of the two permeate ammonia requirements – i.e. ≤ 1.2 mg/L. Likewise, the biological treatment train's BOD_5 removal performance under all modelled flow conditions (ADF, MMAF, MDF) at the minimum design temperature and assuming the design influent BOD_5 concentration of 98 mg/L applies at all flowrate was routinely < 1 mg/L, versus a treatment requirement of BOD_5 ≤ 5 mg/L.

The design specifications noted a minimum plant flow of 3.0 MGD. While the duration of minimum flow was not stated, even if this represents a prolonged condition, SUEZ's ZeeWeed MBR systems do not require a minimum MLSS concentration threshold for the membranes to be able to achieve the required effluent quality. Our ultrafiltration membranes have a nominal pore size of 0.04 micron. Therefore, at low flows, lower sludge concentrations can be maintained in the bioreactor tanks to maintain an F:M ratio in the range of 0.1-0.2 lb BOD/lb MLVSS without pore fouling or turbidity exceedances.

With regards to flexibility, the membrane design allows for the system to be run at the ADF condition with a membrane train offline indefinitely; and during higher flow conditions such as MMAF and MDF, the system can run with N-1 membrane trains online for up to 7 days, and 24 hours, respectively. This redundancy allows for a membrane train to be temporarily removed from service for cleaning or for emergency maintenance/repair operations during critical maximum day and maximum month flows, while allowing for a membrane train to be constantly offline – for maintenance or for energy savings – during periods of average daily flows. Note that at the minimum design

flow of 3.0 MGD, or at the ADF flow of 5.0 MGD and wastewater temperatures > 12 °C, only two membrane trains need to be in production; the remaining two can be in standby, or the membrane trains can rotate between duty and standby. An alternate approach is to keep all 4 membrane trains online even during flows at or below ADF – by running all of the membranes continuously, but at low flux, the already-long ZW500 membrane life can be further enhanced.

Depending on the length of an off-line period, procedures for membrane train inactivity can vary for short- and long-term durations.

For short durations offline (days to weeks) due to low flow, membrane trains are typically alternated, with each train remaining available for service if required. The standby membrane train will be automatically aerated twice per hour for 2-5 minutes. Mixed liquor is also periodically introduced to ensure sludge consistency and prevent sludge degradation due to endogenous respiration processes.

For a long duration (weeks to months), the out-of-service membrane train can be drained of mixed liquor, recovery cleaned and filled with permeate. For this scenario, a minimal chlorine dose should be maintained in the tank to prevent biological growth on the membrane fibers and tank walls. Sodium hypochlorite can be used for this purpose. It can be pumped into the tank through the membranes (similar to membrane cleaning). After that, LEAP Lo aeration should be turned on for 2-5 minutes for mixing the chemical with water. Air mixing for longer than that is not recommended (to prevent air stripping of chlorine). Chemical addition can be done intermittently to ensure the chlorine residual is maintained above 2-3 mg/L. If required, the PLC can be programmed to automatically complete these functions.

Dry storage of the membranes for long periods of time, while possible, is not recommended as it entails the labor-intensive procedure of refilling the membrane fibers with a glycerin solution. SUEZ should be contacted for guidance and/or service and support if the membranes are to be dry stored.

3.i Membrane Operation and Cleaning

3.i.1 Membrane Operation

Filtration

Ultrafiltration, or permeation, consists of drawing clean water from the mixed liquor through the membrane fibers via the permeate piping and siphon control valve and discharging it into the common siphon header. During normal operation, the membrane filtration system is operated with a repeated filtration cycle consisting of a production period (permeation) followed by a relaxation or backpulse period. Under normal conditions the system is operated in relaxation mode, where the vacuum pressure across the membrane is briefly stopped, allowing solids to release, and be scoured away from the membrane surface. During start-up or conditions of poor sludge filterability, the system can be operated in backpulse mode if required to provide a more powerful means of removing solids from the surfaces of the membrane fibers.

Relaxation

Under normal operating conditions, the ZeeWeed membrane filtration system operates on a 10 -15 minute permeation cycle followed by a relaxation (no flow) for 30-60 seconds. During relaxation, the siphon control valve closes, and the membranes are allowed to relax with aeration for a short period. Neither chemicals nor backpulsing are used during the relaxation cycle.

Backpulse

While the ZeeWeed MBR normally operates in Relaxation, inclusion of backpulse equipment allows the plant operator to select Backpulse mode, if required. Whereas most flat plate manufacturers cannot backpulse without risk of damaging the seam between the membrane and supporting panel, the reinforced ZeeWeed hollow fiber membrane is designed to allow flow reversal through the membrane (i.e., backpulse). This provides more effective physical cleaning of the membrane and can be used when warranted by operating conditions.

3.i.2 Membrane Cleaning

Key to a successful wastewater MBR design is the ability to operate consistently, even during extreme operating conditions, without significant operator attention. A membrane filtration system must therefore be designed with cleaning systems to support both normal operation and periodic process upset events.

When a membrane bioreactor system experiences process upsets due to variations in the composition of the feed water quality, the membranes **must** be able to respond. The ability to clean the membranes quickly is critical to ensure a smooth operating plant. ZeeWeed membrane modules are purposely designed with a flexible reinforced hollow fiber geometry which allows automatic membrane cleaning, as required, to maintain reliable and continuous operation. This feature ensures that the ZeeWeed MBR system is always online and prepared for any operating condition.

The ZeeWeed MBR membrane cleaning "toolkit" consists of chemical and non-chemical cleaning features including the following:

We offer several cleaning strategies to maintain the membranes in an optimum condition.

- ❑ low energy, low maintenance LEAPmbr air scour
- ❑ energy saving relax mode
- ❑ ability to backpulse with or without cleaning chemicals
- ❑ ability to isolate individual membrane trains to perform extended chemical soak cleaning (recovery cleaning)
- ❑ ability to maintain treatment capacity during cleaning
- ❑ ability to easily clean quickly, within minutes, remotely from the control room or the MCP, without operator action.
- ❑ ability to begin permeating immediately after cleaning without having to form a filtering "gel" layer on the membranes to achieve product water quality requirements, as would be the case for microfilters and flat sheet membranes.
- ❑ ability to remove individual membrane cassettes or individual membrane modules from the process tank during operation for manual inspection without lowering normal tank operating levels or turning off permeate pumps
- ❑ ability to manually clean the membranes, if necessary, without complicated membrane cleaning machinery or fear of damaging the membranes.

The **Caesars Lane MBR** design will incorporate two fully automated types of chemical cleaning – shorter duration, lower concentration Maintenance Cleans (MCs) and longer duration, higher concentration Recovery Cleans (RCs) to optimize membrane performance and longevity. **All cleaning is performed in-situ**.

Several membrane competitors utilize out of tank membrane cleaning instead of maintenance or recovery cleaning as described below:



- In February and March of 2006 The WWTP Experienced Several Thickening Events that Impaired the Membranes
- The Upset was due to a Combination of Conditions that Occurred Simultaneously
- The Remedy for this Unlikely Event was to Remove and Individually Clean all 17,600 Membrane Panels
- Physical and Operational Changes were Implemented to Correct the Problem

Converting a Small WWTP to MBR Treatment Process: Village of New Dundee, Arcadis, 2006

Our competitors may also state that annual or semi-annual recovery chemical cleaning is not required for their membrane systems. Unfortunately, this hasn't proven to be correct.

Kubota proposed no recovery cleans. Past 10-years of operation demonstrates recovery cleans are necessary.

FLEIS&VANDENBRINK

Excerpt: Table 2. Leoni WWTP Membrane Comparison Table, Kubota SP600, Report to Leoni Township prepared by Robert W. Wilcox, P.E., Fleis & Vandenbrink, March 19, 2020. Tel: 616.977.1000

Maintenance Cleaning

The goal of regularly scheduled maintenance cleaning is to maintain sustainable operating TMP and therefore increase the interval between recovery cleanings. The maintenance clean is performed with a low chemical concentration over a short duration, without any need to drain mixed liquor from the membrane tanks. The maintenance cleaning procedure is **entirely automated** and typically scheduled to occur during off-peak hours of the day. The operator can set it to be performed when they prefer.

When performing the maintenance cleaning procedure, the feed to the membrane tank is stopped and the train is aerated for five minutes. Over a series of pulse and relax cycles, the chemical solution is backpulsed through the membranes for ~40 mins total. There is a final backpulse for 2 minutes with permeate only to flush the headers and membranes, followed by 5 minutes of aeration. When the maintenance cleaning procedure is completed, the isolation valves are opened, and the train is brought back into service.

The following table summarizes the maintenance cleaning frequency and duration anticipated for the **Caesars Lane MBR** system. Sodium hypochlorite has been chosen for MCs to control and remove biological foulants, which dominate in typical municipal wastewater treatment settings such as Caesars Lane. Given that the usage of metal-based coagulants is not planned for the biological treatment process, nor does the raw wastewater have excessive alkalinity/hardness, citric acid MCs for inorganic foulant removal are not required. However, the chemical dosing pumps that have been chosen for dosing citric acid RCs (see below) are equally capable of dosing citric acid for MCs if the latter are ever required or desired.

Maintenance Cleaning Information

Maintenance Cleaning	Sodium Hypochlorite (10.3% w/w)
Anticipated frequency	Once per week
Anticipated concentration	200 ppm
Train status	Offline for < 60 minutes
Disposal requirement	None (1)

Note:
1) Cleaning chemical solution is consumed by mixed liquor during the clean (cleaning is performed in situ without tank drain).

Recovery Cleaning

Recovery cleans are performed at higher concentrations of chemicals than MCs, with a longer duration of chemical contact. The cassettes are cleaned in-situ, one train at a time. The train to be cleaned is isolated from the rest of the system, permeation from that train

is suspended, but aeration is continued for a short period to remove solids away from the membrane surface. The mixed liquor in the membrane tank represents a small portion of the total mixed liquor volume and is transferred to the front of the treatment plant (bioreactor).

The membrane tank is filled with permeate and drained to wash residual solids from the tank. Cleaning chemicals are pumped into the tank through the membranes, and finally permeate is used to top up the membrane tank to fully submerge the fibers. The membranes are then soaked in cleaning solution for a period of 6–16 hours, at the operator's preference – 6 hours is sufficient, but some operators prefer overnight soaks for convenience. This extended soak time using higher concentrations of cleaning chemical provides more robust removal of membrane foulants than MCs. Subsequently, the tank contents can be neutralized by letting in some mixed liquor and aerating for mixing if required. Otherwise, the sequence can be repeated with the other chemical, if needed, or the train can be returned to production.

The table below details the recovery cleaning frequency and duration anticipated for the **Caesars Lane MBR** system.

Recovery Cleaning Information

Recovery Clean	Sodium Hypochlorite (10.3% w/w)	Citric Acid (50% w/w)
Anticipated frequency	Twice per year	Twice per year
Anticipated concentration	1,000 ppm	2,000 ppm
Train status	Offline for 6 – 12 hours	Offline for 6 – 12 hours
Disposal requirement	None (1)	None (1)

Note:

1) Cleaning chemical solution is neutralized by mixed liquor as the clean is completed.

The estimated membrane cleaning chemical consumption is shown in Table A-5, A-6, and A-7 in the Bid Worksheets of Section 6.

3.j Fine Screen Requirements

Based on the Preselection Documents a maximum screen aperture of 2 mm with punched hole or woven wire mesh will be incorporated into the facility by the General Contractor. The 2 mm punched hole or woven wire mesh screening recommendation is consistent with SUEZ's extensive experience evaluating the performance of various screen types and opening sizes, as well as the cost, commercial availability, and performance of each.

SUEZ notes that other membrane systems may require 1 mm or finer screens. These can result in increased hydraulic losses and increased maintenance, and are not required for the SUEZ membrane system.

SUEZ also notes that re-screening of the mixed liquor is not proposed, or required for the SUEZ membrane system.

3.k Preliminary Schedule

SUEZ has provided a timeline for the major project milestones that is compliant with Table 3-1: Project Schedule in the specification. A detailed project schedule will be developed after Notice to Proceed.

Table 3-1 (From Section 455000)

Deliverable	Due Date
Design Submittals Schedule Update	To be completed within 15 days after Notice to Proceed
Design Kick-off Meeting	To be completed within 20 days after Notice to Proceed
Bi-Weekly Status Conference Calls	For duration of design scope
Submittal of 50% Design and Shop Submittals	12 weeks after Notice to Proceed
Submittal of 100% Design Documents	16 weeks after Notice to Proceed
Fabrication and Delivery	Per Contractor's schedule, construction contract anticipated to bid in March 2024 with Notice to Proceed in June 2024. Refer to Section 3.k.2
Mechanical Inspection	Per Contractor's schedule
Start-Up, Testing and Commissioning	To be scheduled after successful completion of Mechanical Inspection
Demonstration/Performance Test	To be scheduled after successful start-up and testing
Operations and Maintenance Manuals	A minimum of 14 days prior to start of training
Training	Training to be provided at the conclusion of System Startup

3.k.1 Design Submittals

The 50% Design and Shop Drawing Submittal will comprise mechanical submittals outlined in Section 3.a.2.1 Engineering Services. The 100% Design and Shop Drawing Submittal will comprise the electrical submittals outlined in Section 3.a.2.1

SUEZ has assumed that the MHE and the Town of New Windsor will review and return the shop drawing submittals promptly (2-4 weeks) and that partial submittals will be acceptable.

3.k.2 PLC Programming and HMI Screens

Functional descriptions, control narratives and operations sequence charts will be provided with the 100% Design and Shop Drawing Submittal. SUEZ will complete PLC programming for the supplied system after review and approval of this submission. Ideally, PLC programming and development of HMI screens will be completed in coordination with either MHE, or the Town's SCADA integrator during construction. If required, SUEZ can provide PLC Programming and HMI Screens for the Caesars Lane MBR within 30 weeks after NTP.

3.k.3 Equipment Shipment

Seller has assumed the following minimum durations associated with the shipment schedule.

- Shipment of Equipment – 30-55 weeks from NTP with Manufacture of Equipment (partial shipments allowed) being provided by the Installation Contractor.
- Shipment of Membranes – Membranes will ship immediately prior to their installation on-site and commissioning. This will be coordinated in advance with the Installation Contractor in accordance with the project schedule.

SUEZ has assumed that NTP to Manufacture Equipment will be provided to SUEZ by the Installation Contractor within 90 days of award by the Town of New Windsor to proceed with construction of the project.

SUEZ would like to note that under the current exceptional circumstances under the COVID 19 Pandemic situation, SUEZ may not be in a position to guarantee and comply with the planned schedule for project delivery or performance and that should there be any new measures taken by any governmental authority which may impede or delay the said schedule or performance, SUEZ reserves the right to modify the schedule / contract accordingly. SUEZ will promptly inform you of any changes which may impact the contract or the project.

4 Training Service

SUEZ has developed numerous operator training courses, each catered to the individual needs of its client. The training included by SUEZ will empower the staff to operate the membrane system proficiently and confidently.

Client training packages are developed, maintained, and delivered by the commissioning group. SUEZ has full-time training experts responsible for training methodologies and curriculum development.

Shadowing: During the commissioning and start-up of the system and for membrane installation, SUEZ recommends that an operator representative shadows the field service representative. Shadowing provides superior operator understanding and confidence in all aspects of membrane system operation. Our partner-focused field service representatives will instruct a "shadow" operator over the course of start-up and commissioning.

Classroom: SUEZ will conduct classroom training at the facility. It is recommended that this section of training is conducted prior to the completion of commissioning, but after the installation of membranes, so that the information learned is quickly put into practice and reinforced through actual application on the system.


operator training

One of our training specialists will deliver the classroom training, covering the theory and practice required to operate a SUEZ system. Group sizes of five to ten are optimal for classroom training, but up to twenty people can be accommodated in one session. Material to be covered includes:

- ❑ membrane application theory
- ❑ performance monitoring
- ❑ membrane cleaning theory
- ❑ system controls theory
- ❑ the reasoning method of troubleshooting

SUEZ requires that there be a suitable classroom with associated teaching materials such as blackboards, overhead projectors, pens, pencils, writing pads etc. be available for the duration of the course. It is preferred that, where possible, training be carried out at the plant where the equipment supplied is located.

Hands-on: Immediately following the classroom training, the training specialist will further train the owner's personnel through hands-on operation of the membrane system. The material to be covered includes:


hands-on training

- ❑ use of the computer operator interface
- ❑ plant maintenance
- ❑ instrumentation and equipment maintenance
- ❑ membrane cleaning
- ❑ troubleshooting
- ❑ SUEZ's experience in training shows that groups for hands-on training should be kept to five (5) or less.

Learning Outcomes

Upon successful completion of this learning program the learner will be able to:

- ❑ membrane application and systems control theory;
- ❑ primary flows and equipment functions;
- ❑ navigate the P&IDs to locate components;
- ❑ performance monitoring and membrane cleaning;
- ❑ navigate the Operating Manual and controls documentation;
- ❑ the reasoning method of troubleshooting;
- ❑ use of the computer operator interface (HMI);
- ❑ plant maintenance and preventive steps, and;
- ❑ instrumentation and equipment maintenance.

5 Technical Service and Support

SUEZ is a proven leader in delivering tangible value to our clients over the life of the plant. Our measure of success is how well we deliver solutions that help our clients meet their critical objectives in each and every year of operation.

Through long-acquired membrane experience, SUEZ has clearly distinguished itself from other membrane manufacturers. Mature service culture and deep technical expertise are at the ready to serve and support the **Town of New Windsor** through the entire membrane lifecycle.

5.a Design Service

The proposed SUEZ MBR system has been configured to comply with the specifications. The table below summarizes the allocations for design meetings/workshops and site visits.

Deliverable	Due Date	Suez Personnel	On-Site Days	Location
Design submittals update	To be completed within 15 days after NTP	n/a	n/a	n/a
Design kick-off meeting	To be completed within 20 days after NTP.	Sales manager Project manager Mechanical engineer Process engineer Electrical design engineer Controls engineer Programmer	n/a	Skype/Teams
Bi-weekly status conference calls	For duration of design scope	Sales manager Project manager Mechanical engineer Process engineer	n/a	Skype/Teams
Submittal of 50% design and shop submittals and review meeting	12 weeks after NTP	Sales manager Project manager Mechanical engineer Process engineer Electrical design engineer Controls engineer Programmer	n/a	Skype/Teams
Submittal of 100% design documents	16 weeks after NTP	n/a	n/a	Skype/Teams

5.b Construction, Commissioning, and Training Service

With more than 700 full scale membrane-based water and wastewater plants commissioned and in operation in North America, the commissioning group has developed a powerful infrastructure that provides timely support and management of all commissioning activities.

Throughout commissioning, testing and start-up, we will assign an internal field service supervisor that will support our field service representative (FSR) to ensure rapid response to any on-site issues that may arise.

During the commissioning phase of the project, regular updates will be provided to document site progress. Potential delays, site issues and planning of future activities will be communicated within these reports.

The following is a summary of the on-site technical support services provided by trained SUEZ field service representatives.

SUEZ will provide the owner and contractor with:

- ❑ construction and installation assistance related to SUEZ supplied equipment;
  - recommendations for SUEZ equipment off-loading and installation
  - materials inspection
  - supervision of SUEZ membrane installation
- ❑ assistance with commissioning and start-up of the membrane system;
  - mechanical inspection (prior to commissioning)
  - loop checking, instrumentation and control system verification
  - pipe loss testing
  - clean water permeability testing
  - sludge seeding
- ❑ operator training
- ❑ assistance with the acceptance/performance testing of the system.

The following table outlines the construction, commissioning, and training services to be performed by SUEZ, and the number of days and visits involved.

Deliverable	Due Date	On-Site Days	Location
Fabrication and delivery	Per contractor's schedule, construction contract anticipated to bid in March 2024 with Notice to Proceed in June 2024	n/a	n/a
Mechanical inspection	Per contractor's schedule	5 (1 trip)	Project site
Start-up, testing and commissioning	To be scheduled upon successful completion of mechanical Inspection	45 (4 trips)	Project site
Performance testing	To be scheduled after successful startup and testing.	10 (1 trip)	Project site
Operations and maintenance manuals	A minimum of 14 Days prior to start of training	n/a	n/a
Training	Training to be provided at the conclusion of the system startup	5 (1 trip)	Project site
Total days on site		65	
Total number of trips		7	

Below are brief descriptions of the services during each main stage of execution.

Construction Assistance

A SUEZ representative will meet with the owner and contractor to assist in the following ways:

- ❑ development of a commissioning and start-up schedule and plan;
- ❑ provide guidance with onsite questions related to SUEZ supplied equipment;
- ❑ review resources required during commissioning and start-up;
- ❑ discuss and review control system integration;
- ❑ identification of all SUEZ supplied equipment;
- ❑ ensuring all SUEZ supplied equipment has been delivered in good order and that no damage has occurred during delivery;
- ❑ identification of any discrepancies between the shipping lists and the equipment received;
- ❑ inspection of all SUEZ supplied equipment,
- ❑ inspection of equipment supplied by others (provided it is necessary for the correct operation of the SUEZ system).

Pre-operational Checkout and Testing

After the contractor has completed the installation of the membrane filtration system equipment and provided a completed installation checklist to SUEZ, a commissioning representative will return to site. This visit is to ensure the installation work has been carried out correctly and has reached a degree of completion adequate to allow plant start-up to proceed smoothly and without delays. It will include:

- ❑ Inspection of all wiring to SUEZ supplied equipment (I/O checks);
- ❑ Rotation checks on all SUEZ supplied equipment;
- ❑ Witness flushing of all influent, permeate and backpulse piping using potable/clean;
- ❑ Witness correct operation of prescreening equipment;
- ❑ Setup of SUEZ supplied instrumentation;
- ❑ Stroking SUEZ supplied valves;
- ❑ Verifying operation of SUEZ supplied pumps, blowers and air compressors;
- ❑ Verifying ranges and calibration of SUEZ supplied instrumentation, and;
- ❑ Establishing communication between SUEZ supplied control equipment and control equipment supplied by others.

Following the above, the SUEZ commissioning representative will be present to advise and provide direction to the installation contractor on the preparation and installation of the ZeeWeed membrane cassettes into the membrane tanks.

Once the membranes are installed, the SUEZ commissioning representative will perform testing to validate membrane integrity. Once completed, the membrane system is ready for wet commissioning.

Operator Training

Please see **Section 4** – training service for details.

Start-up Testing

This period will be used to demonstrate that the SUEZ system can meet the discharge requirements during all flow conditions. A SUEZ representative will remain on site to oversee and provide direction to the operations team. The first period will be spent prepping the system, including seeding the bioreactors. The subsequent days will be spent operating the membrane system at ADF, MMF and PDF within 5 percent of their respective design flux. A report on the start-up testing will be provided in the 7 days following completion.

Performance Testing and Follow-up Service

Pending approval of the start-up testing report by the Owner, the operations team will begin operating the plant for the 30-day performance testing. SUEZ will provide one dedicated personnel for onsite support, 24/7 telephone support and remote online monitoring of the system during this performance test period. A performance/acceptance test report will be provided within 30 days after completion of the performance testing with supporting data that indicates that the plant has met all the requirements of the RFP.

After completion of the performance testing, the MBR plant goes into a performance warranty period. In this period, SUEZ will provide 24/7 telephone support and remote online monitoring service to achieve stable MBR operation.

5.c Aftermarket Service

We are ready to put our team to work for the **Caesars Lane MBR** project. When it comes to meeting your post-commissioning service requirements, SUEZ has the depth needed. SUEZ has included the following aftermarket services as part of our bid:

Service	Included in Proposal
Regional Lifecycle Manager	Indefinite
ZeeWeed Users Group	Attendance for one operator for two years is provided
Telephone & PLC code support	Indefinite
24/7 telephone support	10-year
InSight Pro	2-year
Post commissioning service and technical support	First year: 4 days on-site over 2 visits Year 2 to 5: 2 days on-site over 1 visit per year

Partnership Communication

SUEZ knows the importance and long-term implications involved in selecting a membrane supplier. We are committed to continuing to build our partnership with **Orange County** and their operations team and believe communication is the essential ingredient to achieve this as such, we offer the following communication mechanisms:

- ❑ our representative, Sherwood-Logan and Associates;
- ❑ access to a regional lifecycle manager;
- ❑ participation in the ZeeWeed users group;

- ❑ dedicated warranty coordinator, and;
- ❑ technical support.

Regional Lifecycle Manager

The Regional Lifecycle Manager (RLM) will act as the SUEZ Services "quarterback", engaging in frequent communication with plant staff and ensuring timely access to all the technical resources provided by SUEZ. The RLM will also design a schedule and package of services suited to your needs and budget, including:

- ❑ additional years of 24/7 telephone technical support coverage
- ❑ additional years of InSight
- ❑ greater frequency of site visits and or special provisions for emergency site visits
- ❑ plant optimization and plant upgrades
- ❑ membrane replacement planning/budgeting
- ❑ membrane cleaning studies

ZeeWeed Users Group

As an on-going support to ZeeWeed plants, an annual, two-day ZeeWeed users group meeting is organized by SUEZ consisting of formal meetings and a tour of a hosting ZeeWeed plant. New technologies are introduced, current issues are tabled, and roundtable discussions ensue. The users group has become an excellent forum for experienced operators to keep current, to renew old acquaintances, to exchange the "tricks of the trade" with each other, and to impart their knowledge to newer ZeeWeed operators. Generous hospitality combines with informal experiences and exercises to enhance the camaraderie amongst domestic and international plant operators.



ZeeWeed users group meeting in Bonita springs, FL

All ZeeWeed owners are invited to send operators representing their plant. SUEZ covers the conference, food, and hospitality expenses. SUEZ supports this forum to facilitate interaction between ZeeWeed plant operators and to provide real-world feedback to SUEZ's management, design and operations staff.

Warranty Support

To promptly manage warranty claims, SUEZ lifecycle services has a warranty coordinator dedicated to that function and that function only. Our warranty coordinator has access to all SUEZ resources to ensure timely resolution of problems that may occur.

Telephone Technical Support

For the life of the system, plant operators have telephone access to a skilled SUEZ technical support specialist who will assist plant operators in troubleshooting of system problems such as electrical (PLC/HMI), mechanical and process control issues.

Plant operators call the telephone number provided below at any time during business hours and ask for technical support.

Business hours - hours of operation:	8:00 am to 6:00 pm Monday to Friday, EST
Telephone, toll free in North America:	+1-866-271-5425 press 1 for technical support, press 2 for non-warranty parts quotations

Calls After-Hours - 24/7 Emergency Telephone Technical Support



24/7 technical support

Our 15-person technical support team is always on call and is equipped with the system information for effective communication with a plant operator through an emergency, potentially averting loss of plant production and expensive call outs. The telephone technical support group maintains access to all plant drawings for rapid reference during 24/7 support calls and maintains remote connectivity to dial into a plant's control system in order to gain a better understanding of the situation, and to make any necessary adjustments to control set-points or software. Dial-in access requires a LAN modem or hi-speed internet connection at your facility and requires that permissions are setup in advance. If a situation requires more detailed investigation of control code, a SUEZ programmer is on call at all times. Our technical support specialists will manage the resources needed within SUEZ to assist you in resolving your plant issues.

InSight – Knowledge Management Solution

InSight captures and transforms your plant data into meaningful and actionable information, ultimately providing the knowledge you need to maximize performance, avoid operational interruptions, optimize your processes, and reduce the total cost of operation. Insight collects data from the PLC and makes it available for trending or analysis, as shown in the figure below where TMP data is being trended.

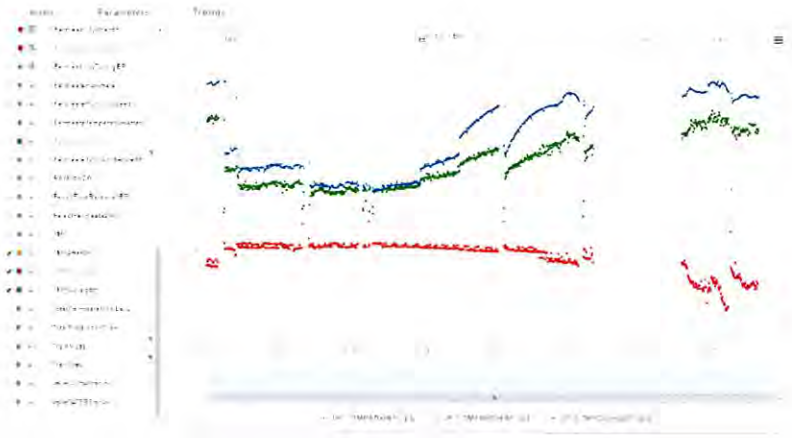

InSight data trend example

InSight provides:

- ❑ Analytics: Seeing, at any point in time, historical and current plant performance against success criteria and the trajectory of future performance; where it's on track and the weaknesses that need improvement.
- ❑ Early detection and alarming: Detecting emerging problems, so that action can be taken now, before a failure is experienced in the future.
- ❑ Optimization: Identifying opportunities to optimize and extend the life of membranes and equipment, lowering total cost of operations without sacrificing performance.
- ❑ Productivity: Reducing the tedious work of entering and reporting operator-collected data including data required for membrane warranties. Helping staff get more done with tools that enhance their personal productivity, enabling them to see and do more.
- ❑ Reporting: Reporting on key performance indicators and their impact on business objectives.
- ❑ Membrane replacement strategy: Planning a cost-effective strategy for membrane replacement and upgrades with a deep understanding of factors affecting membrane performance.

Key Benefits:

- ❑ Allowing you to consolidate all your data to pull out valuable information to drive better business results.
- ❑ Driving safety, reliability, accountability and increased throughput.
- ❑ Digitizing data and tools to liberate your operations and service teams to do their jobs more effectively.
- ❑ Providing peace of mind by having another level of surveillance which allows you to redefine operational excellence.

InSight Pro

InSight Pro puts a professional SUEZ process expert onto your team, collaborating to empower your operating team to apply the power of InSight.

The process expert is specifically assigned to your plant and will monitor key parameters on a regular rhythm using the InSight platform. The process expert will be in regular contact with the key members of your operations team to discuss and resolve performance, process and operational issues. While supporting your operations team with day-to-day issues, the process expert will also use InSight to bring attention to long term trends and provide operational recommendations.

As part of InSight pro, the process expert provides bi-weekly process reports with analysis of key trends and recommendations to support plant operation, membrane cleaning and overall performance. In addition, an annual summary performance report is provided.

If the need for troubleshooting does arise, your SUEZ process expert is accessible, familiar with your system and empowered with accurate information to assist.

Site Visits

SUEZ and the **Caesars Lane MBR**'s operating team will cooperatively plan site visit duration and agenda, which can be project specific or selected from the scope of services below. The SUEZ service representative and plant operators can initially define priority tasks and jointly revise these as required.

Plant operators have found it beneficial to schedule the first site visit alongside the first membrane recovery cleaning or prior to the expiry of the mechanical warranty period to identify warrantable issues.

Process Review

- ❑ Inspect the facility with the operator(s);
- ❑ Review results of analytical tests;
- ❑ Evaluate influent, effluent and wasting flow rates;
- ❑ Review chemical dosage rates and overall chemical usage.;
- ❑ Review operating logs with the operator(s). Discuss operator concerns and SUEZ issues emerging from this review;
- ❑ Discuss imminent seasonal shifts, and;
- ❑ Advise the operations manager of technical updates as they become available.

Membrane Cleaning and Integrity

- ❑ Provide direct assistance to the plant operator(s) in the membrane cleaning procedures. Assess the effectiveness of on-going maintenance cleaning and recovery cleaning procedures and provide recommendations to the plant operator;
- ❑ Evaluate the aeration patterns in the tank and blower performance, and;
- ❑ Lift and inspect membrane cassettes to assess membrane, tank, and connection conditions.

Controls Verification

- ❑ Review system alarm history, discuss any related issues with operator(s) and recommend appropriate actions to be taken;
- ❑ Perform limited PLC code modifications as planned, secured by proper documentation, dial-in capabilities and file backup precautions.
- ❑ Verify operation of all safety interlock/controllers, pressure switches and temperature switches.

Mechanical And Electrical

- ❑ evaluate heat, vibration, wear and tear, and other abnormal conditions of mechanical and electrical equipment.
- ❑ Evaluate energy consumption patterns.
- ❑ Recommend required maintenance.

Calibration Verification

- ❑ Review system set points.
- ❑ Assist the plant operator to verify the condition of all control instruments, sensors, probes, and transmitters including switching action and output.
- ❑ The SUEZ service representative will collaborate with the plant operator in maintaining a log of calibration activities.

Spares

- ❑ Review the spares provisions with the plant operator to identify any additional spare parts which should be brought into inventory to provide the desired level of security to the plant including spares related to non-SUEZ equipment.
- ❑ Develop a preventative maintenance plan with the plant operator.

Training

Learning to operate and manage an MBR system is a life-long vocation. On each service visit, we will share our own expanding experience and know-how with operators. They will benefit from the latest developments in operating and maintenance procedures and from technical updates brought by the SUEZ service representative.

The SUEZ service representative will provide operators with on-site, informal training to cover areas of concern in the operation, process, membrane inspection procedures, maintenance, or troubleshooting.

A formal refresher training session of 1½ hours per day on selected curriculum can be arranged. Technical material will be presented using PowerPoint screens on a portable computer and hands-on training will be done throughout the plant.

Reporting

Before leaving site, SUEZ will record observations and discuss with operators concerning the condition of the equipment, tasks accomplished during the visit, and key operating and maintenance issues requiring further attention. SUEZ will provide a service visit report to the plant operator within a reasonable timeframe of the site visit. The Owner will be asked to sign a work order that describes the hours on site and tasks accomplished.

6 Bidding Documents – Bid Form, Bid Worksheets, and Bid Bond

1 Bid Form

2 Bid Worksheets

3 Bid Bond

BID FORM FOR PROCUREMENT CONTRACT

The terms used in this Bid with initial capital letters have the meanings stated in the Instructions to Bidders, the General Conditions, and the Supplementary Conditions.

ARTICLE 1—BUYER AND BIDDER

1.01 This Bid for Caesars Lane WWTP MBR System Pre-Selection is submitted to:

Town of New Windsor

555 Union Avenue

New Windsor, NY 12553

1.02 The undersigned Bidder proposes and agrees, if this Bid is accepted, to enter into a Procurement Contract with Buyer in the form included in the Procurement Bidding Documents, and to furnish the Goods and Special Services as specified or indicated in the Procurement Bidding Documents, for the prices and within the times indicated in this Bid, and in accordance with the other terms and conditions of the Procurement Bidding Documents.

ARTICLE 2—BASIS OF BID

2.01 *Base Bid Price*

A. Bidder shall complete the attached Bid Tables and Worksheets that contain the required formulas and submit with their bid. Bids received without a completed Worksheets shall be deemed unresponsive. Bids received with Worksheets completed incorrectly (i.e., provided formulas not used, miscalculated, or doesn't match submittal information) shall be deemed unresponsive.

B. Bidder acknowledges that the MBR System Capital Cost line item below represents the actual price for the equipment to be paid by the Buyer and will reflect the amount to be used in the Agreement.

C. Bidder acknowledges that any discrepancy between the attached Worksheets and the Bid Summary Table below shall be resolved by using the lower cost/value when comparing bid costs.

D. Bidder acknowledges that the formulas and definitions provided in the attached Worksheets were developed to provide a fair estimate of the 10-year cost value to the Buyer, as a result of selecting the Bidder's equipment.

E. Bidder acknowledges that the other line items in the table below are considered in addition to the MBR System Capital Costs for purposes of bid comparison; providing the highest probability of determining the most cost-effective bid for the buyer over the next 10 years for this project.

Copyright© 2019 National Society of Professional Engineers, American Council of Engineering Companies, and American Society of Civil Engineers. All rights reserved.

F. Bidder hereby agrees to perform all Work as described in the Specifications and as shown on the Drawings of these Contract Documents, complete for the following Total Bid Cost price indicated in the following Bid Summary Table:

(Note: Total Bid Cost includes Items 1, 2, 4, and 5)

BID SUMMARY TABLE

Item No.	Description	Extended Total Price
1.	Capital MBR System Costs (See Table in Section 2.01.G)	$ 3,826,000
2.	Annual Service Cost (Table A-12, Line A) x 7.4	$ Included in the Capital MBR Cost
3.	Annualized Maintenance Cost (Table B)	$ 451,339
4.	Construction Costs (Table C-4, Line C.12)	$ 5,322,402
5.	Present Worth O&M (Line 3 x 7.4)	$ 3,339,908
	TOTAL BID COST (Sum of all rows)	**$** 12,488,310

TOTAL BID COST TWELVE MILLION AND FOUR HUNDRED EIGHTY EIGHT THOUSAND AND THREE HUNDRED TEN

(in words)

G. The MBR System Capital Cost Schedule summarizes the corresponding Unit Price and Extended Total Price for each Cost Item. Bidder acknowledges that the Extended Total Price shall be full compensation for all Base Bid Work complete, as described for each scheduled Bid Item.

MBR SYSTEM CAPITAL COST SCHEDULE

Item No.	Description	Unit	Estimated Quantity	Unit Price	Extended Total Price
1.	Bonds and Insurance	LS	1	$ 65,821	$ 65,821
2.	Submittals	LS	1	$ 167,437	$ 167,437
3.	Membrane Units and MBR Integral Interconnecting	LS	1	$ 1,996,209	$ 1,996,209
4.	Pumps, Mixers, Blowers, Diffusers, Valves etc.	LS	1	$ 1,043,983	$ 1,043,983
5.	Chemical Cleaning Systems	LS	1	$ 73,127	$ 73,127
6.	Instrumentation and Controls	LS	1	$ 233,167	$ 233,167
7.	Start-up, Commissioning and Training	LS	1	$ 85,365	$ 85,356
8.	Miscellaneous	LS	1	$ 160,900	$ 160,900
				TOTAL MBR SYSTEM CAPITAL COST	**$** 3,826,000

TOTAL MBR SYSTEM CAPITAL COST THREE MILLION AND EIGHT HUNDRED TWENTY SIX THOUSAND

(in words)

H. Estimated annual operation and maintenance costs are based on the Average Daily Flow and wastewater characteristics listed in the Section 455000 Membrane Filtration System. Costs should be stated for continuous steady state operation at ADF. Assumed diurnal curve modeling will not be accepted.

I. Bidder shall attach all tables and worksheets as part of evaluated bid submittal package.

J. Bidder shall attach Bid Submittals required in Section 455000 Membrane Filtration System.

Copyright© 2019 National Society of Professional Engineers, American Council of Engineering Companies, and American Society of Civil Engineers. All rights reserved.

2.02 *Major Equipment and Systems Suppliers*

A. In connection with major items of equipment to be furnished and installed in this Project, Bidder expressly agrees to the following provisions:

1. That the Total Base Bid Price stated above includes the furnishing of major equipment, products, and systems furnished by the Supplier which Bidder has selected from those suppliers listed in table "Schedule of Proposed Major Equipment and Systems Suppliers" completed as part of this Bid Form; and Bidder has circled the name of the selected Supplier in the "Schedule of Proposed Equipment Suppliers" form in this Section.

B. The "Schedule of Proposed Major Equipment and Systems Suppliers" in this Bid Form shall be binding in terms of the selected equipment, products, systems, and suppliers to be provided by the Bidder under the Total Base Bid Price.

2.03 Substitutions for Major Equipment and Systems

A. Substitutions offered by Bidder shall be governed by the requirements of the General Conditions; and Product Requirements of these Specifications. Bidder expressly agrees to the following provisions:

1. Where proposed substitutions for major equipment and system items listed in the "Schedule of Proposed Major Equipment and Systems Suppliers" form are to be considered, they must be designated by Bidder in the spaces provided on the Schedule Form.

2. Contract Price will be determined on the basis of the lowest Total Base Bid Price or adjusted Total Base Bid Price. Substitutions for Major Equipment and Systems proposed by Bidder and deemed by Buyer to be acceptable shall be considered only after Contract Award.

The remainder of this page was left blank intentionally.

Copyright© 2019 National Society of Professional Engineers, American Council of Engineering Companies, and American Society of Civil Engineers. All rights reserved.

2.04 *Schedule of Proposed Major Equipment and Systems Suppliers*

SCHEDULE OF PROPOSED MAJOR EQUIPMENT AND SYSTEM SUPPLIERS

A	B	C	D	E	F	G
Item	Spec. Section No.	Description	Prequalified "Major Equipment Manufacturers"	Identify "Supplier or Manufacturer" Included in Bidder's Base Bid Price by circling one of the following(1)	Proposed Seller Substitution (optional)(2)	Lump Sum Price Adjustment Add/(Deduct)
a.	455000	Submersible Pumps	a. Flygt b. ABS/Sulzer c. Wilo d. KSB	a. Flygt b. ABS/Sulzer c. Wilo d. KSB		$_____
b.	455000	End suction centrifugal pump	a. Flowserve b. ABS/Sulzer c. Pentair/Fairbanks d. KSB	a. Flowserve b. ABS/Sulzer c. Pentair/Fairbanks d. KSB		$_____
c.	455000	Rotary Lobe Pumps	a. Vogelsang b. Boerger	a. Vogelsang b. Boerger		$_____
d.	455000	Rotary Lobe Blowers	a. Gardner Denver b. Kaeser c. Aerzen	a. Gardner Denver b. Kaeser c. Aerzen		$_____
e.	455000	Submersible Mixers	a. Flygt b. ABS/Sulzer c. Wilo d. KSB	a. Flygt b. ABS/Sulzer c. Wilo d. KSB		$_____
f.	455000	Membrane Diffusers	a. EDI b. Sanitaire c. SSI	a. EDI b. Sanitaire c. SSI		$_____

Notes:

(1) Instructions for listing supplier or manufacturer included in Bidder's Base Bid Price under Column E:

a. Circle name of one supplier or manufacturer for each item listed under Column A to be included in the Bidder's Base Bid Price.

b. Proposal shall be considered irregular and subject to rejection if Bidder:

1) Fails to list (by circling) an approved Supplier or Manufacturer listed under Column E;

Copyright© 2019 National Society of Professional Engineers, American Council of Engineering Companies, and American Society of Civil Engineers. All rights reserved.

ARTICLE 3—TIME OF COMPLETION

3.01 Bidder agrees that the furnishing of Goods and Special Services will conform to the schedule of Procurement Contract Times set forth in Article 2 of the Procurement Agreement.

3.02 Bidder accepts the provisions of the Procurement Agreement as to liquidated damages.

ARTICLE 4—ATTACHMENTS TO THIS BID

4.01 The following documents are attached to and made a condition of this Bid:

A. Required Bid security in the form prescribed in the Instructions to Bidders.

B. Evidence of authority to do business in the state of the Project; or a written covenant to obtain such authority within the time for acceptance of Bids.

C. Evaluated bid submittal in accordance with Specification 455000.

D. Required Bidder Qualification Statement with supporting data.

ARTICLE 5—BIDDER'S ACKNOWLEDGMENTS

5.01 Bidder accepts all terms and conditions of the Instructions to Bidders. This Bid will remain subject to acceptance for 45 days after the Bid opening, or for such longer period that Bidder may agree to in writing upon request of Buyer.

5.02 Bidder has examined and carefully studied the Procurement Bidding Documents, the related data identified in the Procurement Bidding Documents, and the following Addenda, receipt of which is hereby acknowledged:

Addendum No.	Addendum Date
1	June 29, 2022
2	July 08, 2022

ARTICLE 6—BIDDER'S REPRESENTATIONS AND CERTIFICATIONS

6.01 *Bidder's Representations*

A. In submitting this Bid, Bidder represents that:

1. Bidder has examined and carefully studied the Procurement Contract Documents.

2. If required by the Instructions to Bidders to visit the Point of Destination and the site where the Goods are to be installed or Special Services will be provided, or if, in Bidder's judgment, any observable local or site conditions may affect the delivery, cost, progress, or furnishing of the Goods and Special Services, then Bidder has visited the Point of Destination and site where the Goods are to be installed or Special Services will be provided (as applicable) and become familiar with and is satisfied as to the observable local and site conditions that may affect delivery, cost, progress, and furnishing of the Goods and Special Services.

Copyright® 2019 National Society of Professional Engineers, American Council of Engineering Companies, and American Society of Civil Engineers. All rights reserved.

3. Bidder is familiar with and is satisfied as to all Laws and Regulations that may affect the cost, progress, and performance of Seller's obligations under the Procurement Contract.

4. Bidder has carefully studied, considered, and correlated the information known to Bidder with respect to the effect of such information on the cost, progress, and performance of Seller's obligations under the Procurement Contract.

5. Bidder has given Engineer written notice of all conflicts, errors, ambiguities, or discrepancies that Bidder has discovered in the Procurement Contract Documents, and the written resolution (if any) thereof by Engineer is acceptable to Bidder.

6. The Procurement Contract Documents are generally sufficient to indicate and convey understanding of all terms and conditions for performance of Seller's obligations under the Procurement Contract.

7. The submission of a Bid will constitute an incontrovertible representation by Bidder that Bidder has complied with every requirement of the Bidding Requirements, that without exception the Bid (including all Bid prices) is premised upon furnishing the Goods and Special Services as required by the Procurement Contract Documents.

6.02 *Bidder's Certifications*

A. Bidder certifies that:

1. This Bid is genuine and not made in the interest of or on behalf of any undisclosed individual or entity and is not submitted in conformity with any collusive agreement or rules of any group, association, organization, or corporation;

2. Bidder has not directly or indirectly induced or solicited any other Bidder to submit a false or sham Bid;

3. Bidder has not solicited or induced any individual or entity to refrain from bidding; and

4. Bidder has not engaged in corrupt, fraudulent, collusive, or coercive practices in competing for the Procurement Contract. For the purposes of this Paragraph 6.02.A.4:

a. "corrupt practice" means the offering, giving, receiving, or soliciting of anything of value likely to influence the action of a public official in the bidding process;

b. "fraudulent practice" means an intentional misrepresentation of facts made (a) to influence the bidding process to the detriment of Buyer, (b) to establish bid prices at artificial non-competitive levels, or (c) to deprive Buyer of the benefits of free and open competition;

c. "collusive practice" means a scheme or arrangement between two or more Bidders, with or without the knowledge of Buyer, a purpose of which is to establish bid prices at artificial, non-competitive levels; and

d. "coercive practice" means harming or threatening to harm, directly or indirectly, persons or their property to influence their participation in the bidding process.

Copyright® 2019 National Society of Professional Engineers, American Council of Engineering Companies, and American Society of Civil Engineers. All rights reserved.

This Bid is offered by:

Bidder:

SUEZ WTS SYSTEMS USA, INC.

(typed or printed name of organization)

By: 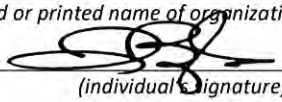

(individual's signature)

Date: JULY 12, 2022

(date signed)

Name: DAVID BINGHAM

(typed or printed)

Title: COMMERCIAL DIRECTOR

(typed or printed)

(If Bidder is a corporation, a partnership, or a joint venture, attach evidence of authority to sign.)

Attest: SEE ATTACHED

(individual's signature)

Title:

(typed or printed)

Address for giving notices:

3239 Dundas Street West, Oakville, ON L6M 4B2

Designated Representative:

Name: GRAHAM BEST

(typed or printed)

Title: REGIONAL MANAGER

(typed or printed)

Address:

3239 DUNDAS ST. W., OAKVILLE, ON L6M 4B2

Phone: 905 330 0881

Email: graham.best@suez.com

License No.: N/A

Classification: N/A

Limitation: N/A

Copyright© 2019 National Society of Professional Engineers, American Council of Engineering Companies, and American Society of Civil Engineers. All rights reserved.

Caesars Lane WWTP Expansion Phase
MBR Pre-Selection

ADDENDUM NO. 2

ACKNOWLEDGEMENT OF RECEIPT OF ALL ADDENDUMS LISTED BELOW:

ADDENDUM NO. 1 – 29 JUNE 2022

ADDENDUM NO. 2 – 8 JULY 2022

SUBMIT THIS SHEET WITH YOUR BID

(End of Addendum No. 2)

MHE Engineering, D.P.C.
33 Airport Center Drive, Suite 202
New Windsor, NY 12553

DELEGATION OF SIGNATURE AUTHORITY BY OFFICER

BY THIS DELEGATION OF SIGNATURE AUTHORITY, I, as Vice President - Engineered Systems, of SUEZ WTS USA, Inc.; SUEZ WTS International USA, Inc.; SUEZ WTS Analytical Instruments, Inc.; SUEZ WTS Systems USA, Inc.; SUEZ WTS Services USA, Inc.; SUEZ WTS Solutions USA, Inc.; and Zenon Environmental Corporation (hereinafter collectively referred to as "SUEZ WTS") with the delegable authority granted by the Board of Directors to sign contracts in the name of SUEZ WTS as set forth in the Annual Actions Resolutions of SUEZ WTS, hereby revoke any previously granted delegations issued by me and delegate to the below named individuals, effective January 1, 2021:

Anthony AMENDOLA
Michael BENSON
David BINGHAM
Greg BRICKETT
Joseph BRUCE
Michael CONE
Thomas COSGRAVE
Pedro DACRUZ
Edana ESSA
Andrea FORSTER
Branden GARRETT
William GILL
Richard GRAY
James HARWOOD
Miloud HASSENE
William HEINS
Ryan HESS
Paul HOWLAND
Michael HRIBLJAN
Christopher JANSEN
Paul JOSEPHSON
Diane KUN
Debora LOUNSBERRY
Chris LOW
Melanie MAILLY-DEMONT
Jason MONGRAIN
Dewey PINNOCK
Louise RAYMOND
David ROSSER
Eric SAVAGE
Dhaval SHAH
Stephanie SNYDER
Michael SYLSTRA
Eric TATE
Joseph TIETJENS
Frank TROCINO
Nishith VORA
Graeme YOUNG

A. the authority to exercise my approval authority with regard to commercial operations under the Annual Actions Board Resolutions and SUEZ Water Technologies & Solutions Global Operating Policy, subject to the prior approvals obtained via the SUEZ Delegation of Authority Policy;

B. the authority to sign on behalf of SUEZ WTS those certain agreements within my authority as Vice President, subject to the prior approvals obtained via the SUEZ Delegation of Authority Policy; and

C. the authority to sell goods and/or services to SUEZ WTS customers on standard terms and conditions.

Such delegation includes but is not limited to the delegated authority to sign all contractual instruments, certificates, documents, acknowledgments, consents, and other agreements as may be necessary or convenient in order to carry out the intent and purpose of the foregoing authority.

EXCEPT THAT THIS DELEGATION DOES NOT INCLUDE THE AUTHORITY TO:

1. Modify corporate insurance policies
2. Transfer intellectual property to a customer
3. Enter into joint ventures or partnerships
4. Provide advance payments to customers
5. Provide commissions to agents other than approved distributors
6. Provide deferred revenue
7. Buy back inventory
8. Engage in a Tiering arrangement

Nothing in this Delegation of Signature Authority alters any applicable Corporation review and approval requirements for the above-listed documents, including but not limited the SUEZ Water Technologies & Solutions Global Operating Policy. The Delegation of Signature Authority conferred hereby shall NOT be further delegable.

This Delegation of Signature Authority is valid until 31 December 2021.

IN WITNESS, WHEREOF, I, as Vice President of SUEZ WTS, have caused my signature to be hereunto placed the day and year first above written.

Name: Kevin Cassidy
Title: Vice President - Engineered Systems

Acknowledged by Legal Dept.:

Kelley A. Tarricone

Date: 12/31/2020

Acknowledged by Delegee:

Date: 12/31/2020

BID WORKSHEETS

Bid Analysis
Overview

MBR System proposals shall be evaluated based upon the base bid schedule, present work cost and as noted below:

The evaluation shall consider both financial and non-financial criteria. In addition to the quantitative evaluation of the MBR System Cost and Total Present Worth, the evaluator(s) shall allow careful consideration for non-quantitative evaluation parameters of System Flexibility, Warranty, and Reliability and Technical Support Capabilities. If the Town of New Windsor awards the procurement contract, such award will be to the responsible bidder submitting the bid that best suits the Town's needs.

The following general notes for the basis for the quantitative analyses:

A. Costs and operational requirements are to be based on the Scopes of Supply, process treatment requirements, and hydraulic design requirements as stated in this Specification. If the bidder requires additional information, such as water chemistry, bidder shall request such information a minimum of 30 days prior to bid opening.

B. Membrane replacement shall be set equal to the Warranty Period.

C. Please note that information regarding the Membrane Service Conditions and expected maintenance requirements shall be set equal to the minimum replacement frequency as stated in related O&M materials. For example, if the replacement frequency in the O&M manual that suggests wear items such as seals, retaining rubbers or diffusers shall be replaced every 3-7 years, the System Supplier shall assume a replacement of every 3 years in the Proposal.

D. Annualized operations and maintenance costs are based on Average Daily Flow conditions.

E. Calculation of the present worth of annual costs shall use a Present Worth Factor of 7.4, equal to 10 years at a 6% discount rate.

F. The average electrical Energy costs are assumed to be $0.20/kWh.

G. The calculation of present worth is based on a 10-year plant life cycle for operating and maintenance.

Copyright© 2019 National Society of Professional Engineers, American Council of Engineering Companies, and American Society of Civil Engineers. All rights reserved.

Note: SUEZ's base design is based on a full siphon. With a siphon design, there will be no permeate pumps, and the overall plant power requirement will be reduced. So this table is not applicable.

Table A-1: Permeate Pumps Power Consumption - Siphon Design

Line ID	Parameter	Unit	Value
A	Total Number of Pumps Provided	#	0
B	Total Number of Duty Pumps	#	0
C	Design Capacity of Pumps	gpm @ TDH	n/a
D	Operating Capacity at ADF (total for all operating pumps)	gpm	n/a
E	Average Operating Transmembrane Pressure (average value of the minimum and maximum values provided by the Supplier.)	ft	n/a
F	Static Discharge Head	ft	-2
G	Suction Piping HL	ft	n/a
H	Total Head (E+F+G, ignore discharge piping HL)	ft	n/a
I	Hours of Operation (at ADF)	hr/day	n/a
J	Pump Efficiency	%	n/a
K	Motor Efficiency	%	n/a
L	VFD Efficiency	%	95
M	Operating Horsepower (all operating pumps) $= \frac{D(Q,gpm) * H\ (TDH,ft)}{3960 * (\frac{J}{100} * \frac{K}{100} * \frac{L}{100})}$	HP	n/a
N	Total Power Consumption $= M\ (hp) * 0.746$	kW	n/a
M	Annual Power Consumption $= N * I * 365\ days/yr$	kWhr/yr	0

Copyright© 2019 National Society of Professional Engineers, American Council of Engineering Companies, and American Society of Civil Engineers. All rights reserved.

Note: This page is for SUEZ's alternative design with permeate pumps

Table A-1: Permeate Pumps Power Consumption - Alternative Permeate Pump Design

Line ID	Parameter	Unit	Value
A	Total Number of Pumps Provided	#	4
B	Total Number of Duty Pumps	#	3 (at ADF)
C	Design Capacity of Pumps	gpm @ TDH	3,355 @ 10 psig
D	Operating Capacity at ADF (total for all operating pumps)	gpm	3,788
E	Average Operating Transmembrane Pressure (average value of the minimum and maximum values provided by the Supplier.)	ft	Min at ADF = 1.2 Max at ADF = 6.8 Average at ADF = 2.4
F	Static Discharge Head	ft	-2
G	Suction Piping HL	ft	0.1
H	Total Head (E+F+G, ignore discharge piping HL)	ft	0.5
I	Hours of Operation (at ADF)	hr/day	22.0
J	Pump Efficiency	%	42.8
K	Motor Efficiency	%	90.1
L	VFD Efficiency	%	95
M	Operating Horsepower (all operating pumps) $= \frac{D(Q, gpm) * H\ (TDH, ft)}{3960 * (\frac{J}{100} * \frac{K}{100} * \frac{L}{100})}$	HP	1.31
N	Total Power Consumption $= M\ (hp) * 0.746$	kW	0.97
M	Annual Power Consumption $= N * I * 365\ days/yr$	kWhr/yr	7,820

Copyright© 2019 National Society of Professional Engineers, American Council of Engineering Companies, and American Society of Civil Engineers. All rights reserved.

Table A-2: Blower Power Consumption (complete for each type provided in all basins) - Membrane Blower

Line ID	Parameter	Unit	Value
A	Total Number of Blowers Provided	#	5
B	Total Number of Duty Blowers	#	2 (at ADF)
C	Design Capacity of Blowers, each	SCFM @ psig	1,467@5.5
D	Operating Capacity	SCFM	1,011
E	Min Intake Air Temperature	°F	15
F	Site Relative Humidity	%	85
G	Site Elevation	ft	25
H	Water Level	psig	4.45
I	Discharge Pipe Losses	psig	0.2
J	Operating Discharge Pressure	psig	4.65
K	Hours of Operation (at ADF)	hr/day	24
L	Blower Efficiency at Operating Point	%	68%
M	Motor Efficiency	%	94.5%
N	VFD Efficiency	%	97%
O	Operating Horsepower (all operating blowers)	HP	61.76
P	Total Power Consumption $= M\ (hp) * 0.746$	kW	46.08
Q	Annual Power Consumption $= N * K * 365\ days/yr$ P x K x 365	kWhr/yr	403,625

Note: Values are provided based on 3 membrane trains in operation at ADF with Leap-Low aeration (2 blowers in operation at 69% of the blower capacity)

Copyright© 2019 National Society of Professional Engineers, American Council of Engineering Companies, and American Society of Civil Engineers. All rights reserved.

Table A-2: Blower Power Consumption (complete for each type provided in all basins) - Process Blower

Line ID	Parameter	Unit	Value
A	Total Number of Blowers Provided	#	3
B	Total Number of Duty Blowers	#	1 (at ADF)
C	Design Capacity of Blowers, each	SCFM @ psig	1,950@9.0
D	Operating Capacity	SCFM	1,950
E	Min Intake Air Temperature	°F	15
F	Site Relative Humidity	%	85
G	Site Elevation	ft	25
H	Water Level (including the fine bubble diffuser pressure losses)	psig	7.81
I	Discharge Pipe Losses	psig	0.63
J	Operating Discharge Pressure	psig	8.44
K	Hours of Operation (at ADF)	hr/day	24
L	Blower Efficiency at Operating Point	%	67%
M	Motor Efficiency	%	95.2%
N	VFD Efficiency	%	97%
O	Operating Horsepower (all operating blowers)	HP	106.84
P	Total Power Consumption $= M\ (hp) * 0.746$	kW	79.70
Q	Annual Power Consumption P x K x 365 $= N * 365\ days/yr$	kWhr/yr	698,199

Note: Values are provided based on one blower in operation at 100% of the blower capacity at ADF condition.

Copyright® 2019 National Society of Professional Engineers, American Council of Engineering Companies, and American Society of Civil Engineers. All rights reserved.

Table A-3: RAS Pumps Power Consumption

Line ID	Parameter	Unit	Value
A	Total Number of Pumps Provided	#	4
B	Total Number of Duty Pumps	#	3 (at ADF)
C	Design Capacity of Pumps	gpm @ TDH	5,729@20
D	Operating Capacity at ADF (total for all operating pumps)	gpm	13,889
E	Static Head	ft	1
F	Piping Losses	ft	4
G	Not used		
H	Total Head (F+G)	ft	5
I	Hours of Operation (at ADF)	hr/day	24
J	Pump Efficiency	%	80.1
K	Motor Efficiency	%	78
L	VFD Efficiency	%	95
M	Operating Horsepower (all operating pumps) $= \frac{D(Q, gpm) * H\ (TDH, ft)}{3960 * (\frac{J}{100} * \frac{K}{100} * \frac{L}{100})}$	HP	29.55
N	Total Power Consumption $= M\ (hp) * 0.746$	kW	22.04
O	Annual Power Consumption $= N * I * 365\ days/yr$	kWhr/yr	193,080

Copyright© 2019 National Society of Professional Engineers, American Council of Engineering Companies, and American Society of Civil Engineers. All rights reserved.

Table A-4: Feed Forward Pumps Power Consumption (Not applicable)

Line ID	Parameter	Unit	Value
A	Total Number of Pumps Provided	#	
B	Total Number of Duty Pumps	#	
C	Design Capacity of Pumps	gpm @ TDH	
D	Operating Capacity at ADF (total for all operating pumps)	gpm	
E	Static Head	ft	
F	Piping	ft	4
G	Not used		
H	Total Head (E+F)	ft	
I	Hours of Operation (at ADF)	hr/day	
J	Pump Efficiency	%	
K	Motor Efficiency	%	
L	VFD Efficiency	%	95
M	Operating Horsepower (all operating pumps) $= \frac{D(Q,gpm) * H\ (TDH,ft)}{3960 * (\frac{J}{100} * \frac{K}{100} * \frac{L}{100})}$	HP	
N	Total Power Consumption $= M\ (hp) * 0.746$	kW	
M	Annual Power Consumption $= N * I * 365\ days/yr$	kWhr/yr	

Copyright© 2019 National Society of Professional Engineers, American Council of Engineering Companies, and American Society of Civil Engineers. All rights reserved.

Table A-5: Sodium Hypochlorite Cleaning Consumption

Line ID	Description of Cleaning Event	Frequency (#/yr)	Volume (gal/each)	Total Volume (gal/yr)
A	Sodium Hypochlorite Maintenance Clean	156 (per plant)	12.4	1,940
B	Sodium Hypochlorite Other Clean (Recoery Cleaning)	6 (per plant)	144.8	869
C	Sodium Hypochlorite Other Clean (n/a)	n/a	n/a	n/a
D	Total Usage (12.5% solution)	N/A	N/A	2,809
E	Annual Cost @ $1.80/gallon	$ 3,491 (MCs)	$ 1,564 (RCs)	$ 5,055

Note: Membrane sodium hypochlorite cleaning is based on ADF condition: 1 MC/train per week, and 2 RC per year per train.

Table A-6: Citric Acid Cleaning Consumption

Line ID	Description of Cleaning Event	Frequency (#/yr)	Volume (gal/each)	Total Volume (gal/yr)
A	Citric Acid Maintenance Clean	0	n/a	0
B	Citric Acid Other (Recovery Cleaning)	6 (per plant)	70.1	421
C	Citric Acid Other (n/a)	n/a	n/a	n/a
D	Total Usage (50% solution)	N/A	N/A	421
E	Annual Cost @ $1.90/gallon	$ 0	$ 800	$ 800

Note: Membrane citric acid cleaning is based on ADF condition: 2 RC per year per train and no MC is required.

Copyright© 2019 National Society of Professional Engineers, American Council of Engineering Companies, and American Society of Civil Engineers. All rights reserved.

Table A-7: Chemical #3 Consumption - Not Applicable

Line ID	Description of Cleaning Event	Frequency (#/yr)	Volume (gal/each)	Total Volume (gal/yr)
	Name of Chemical 3_____			
	CAS# Chemical 3_____			
A	Chemical 3 Use (_____)			
B	Chemical 3 Other Use (_____)			
C	Chemical 3 Other Use (_____)			
D	Total Usage	N/A	N/A	
E	Annual Cost @ _$_____/gallon (provide quote)			

A-8: Membrane Basin

Line ID	Parameter	Unit	Value
A	Number of Membrane Reactors	ea	4
B	Membrane Reactor sidewall area (each)	SF	988
C	Total Membrane Reactor sidewall area (A*B)	SF	3,952

Note: A common train wall is shared by two membrane trains. The common wall area has only been included once in the calculation.

Copyright© 2019 National Society of Professional Engineers, American Council of Engineering Companies, and American Society of Civil Engineers. All rights reserved.

Table A-9: Membrane Replacement

Line ID	Parameter	Unit	Value
Supplier shall guarantee that Membrane Unit replacement cost adjusted from the Bid Date to the replacement purchase order date based on the US Department of Labor, Bureau of Labor and Statistics, Producer Price Index commodity data based on Metals and Metal Products WPU10 (60%) and Plastic Products WPU072 (40%) up to a period equal to the warranty period.			
	Trains 1 to 4		
A	Total Quantity of Membrane Units (Trains 1 and 2)	ea	1,408
B	Guaranteed Replacement Membrane Unit Cost	$	1,600
C	Membrane Replacement Interval (Supplier to specify based on 5 reference installations)	years	Membrane Life 14.5
D	List 5 reference installations and years in service until first membrane replacement		
D1	Reference1: Broad Run WRF, Ashburn, VA - 10 MGD Commissioned Mar 2008	14.33 yrs in service	14.33
D2	Reference2: Oxford WWTP, London, ON - 3.6 MGD Commissioned Oct 2008	13.75 yrs in service	13.75
D3	Reference3: Corona WWTP, Corona, CA - 1 MGD Commissioned Dec 2001	20.5 yrs in service	15.83
D4	Reference4: Carnation WWTP, Carnation, WA - 1 MGD Commissioned Apr 2008	14.3 yrs in service	14.33
D5	Reference5: Rio Vista , Rio Vista, CA - 1 MGD Commissioned July 2006	16 yrs in service	14.17
E	Membrane Replacement Cost (A*B/C)	$/yr	155,366

Copyright© 2019 National Society of Professional Engineers, American Council of Engineering Companies, and American Society of Civil Engineers. All rights reserved.

Table A-10: Membrane Specifications

Line ID	Parameter	Units	Value
A	Material (e.g., PVDF, silica carbide, etc.)	-	PVDF
B	Type (hollow fiber, flat sheet, flat plate, ceramic)	-	Hollow fiber
C	Nominal pore size	microns	0.04
D	Membrane unit wetted feed-side surface area	SF	530
E	Number of Membrane Units per MBR Train or Bioreactor Tank	#	352
F	Minimum operating TMP during warranty period	psi	1.0
G	Maximum operating TMP during warranty period	psi	7.0
H	Net Flux at ADF at design temperature*	gfd	6.7
I	Net Flux at ADF (with one membrane unit out of service, at design temperature)	gfd	8.9
J	Net Flux at MMDF at design temperature	gfd	10.7
K	Net Flux at MMDF (with one membrane unit out of service, at design temperature)	gfd	14.3
L	Net Flux at PHF at design temperature	gfd	22.1
M	Net Flux at PHF (with one membrane unit out of service, at design temperature)	gfd	n/a
N	*List 5 reference installations and installation's design net flux at ADF and temperature. Refer to Section 455000, Para 2.1.B.6.e		
N-1a	Reference1 Name: _ Broad Run WRF, VA _ design temperature 12 _°C	gfd	12.8
N-1b	Reference1: adjusted to Caesar's Lane design temperature 10 °C	gfd	12.1
N-2a	Reference2 Name: _ Fallsburg, NY _ design temperature 7 _°C	gfd	7.9
N-2b	Reference2: adjusted to Caesar's Lane design temperature 10 °C	gfd	8.6
N-3a	Reference3 Name: _ Brush Creek WRF, PA _ design temperature 11 _°C	gfd	8.8
N-3b	Reference3: adjusted to Caesar's Lane design temperature 10 °C	gfd	8.6
N-4a	Reference4 Name: _ Beaver Creek, TN _ design temperature 9 _°C	gfd	9.7
N-4b	Reference4, adjusted to Caesar's Lane design temperature 10 °C	gfd	10.0
N-5a	Reference5 Name: _ Traverse City, MI _ design temperature 10 _°C	gfd	9.7
N-5b	Reference5, adjusted to Caesar's Lane design temperature 10 °C	gfd	9.7

Copyright© 2019 National Society of Professional Engineers, American Council of Engineering Companies, and American Society of Civil Engineers. All rights reserved.

Table A-11: Membrane Specifications (cont'd)

Line ID	Parameter	Units	Value
O	Membrane Tank - width	ft	8
P	Membrane Tank - length	ft	40
Q	Minimum recommended operating water level	ft	9.0
R	Maximum recommended operating water level	ft	10.7
S	MBR MLSS	mg/L	10,625
T	RAS Rate (at ADF)	MGD	20.0
U	RAS Rate (at MMDF)	MGD	32.0
V	WAS Rate (at ADF)	MGD	0.03
W	Air scour flow rate per MBR tank at ADF	SCFM	674
X	Air scour flow rate per MBR tank at MMDF	SCFM	674
Y	Sodium hypochlorite: minimum maintenance cleaning interval	days	3.5
Z	Sodium hypochlorite: minimum recovery cleaning interval	days	183
AA	Citric acid: minimum maintenance cleaning interval	days	n/a
AB	Citric acid: minimum recovery cleaning interval	days	183
AC	Tank liner or coating required?	yes/no	Not required
	If yes, describe.		n/a
AD	Tank isolated any time during cleaning?	yes/no	Yes
AE	Tank drained any time as part of cleaning?	yes/no	No (for MC) Yes (for RC)

Copyright© 2019 National Society of Professional Engineers, American Council of Engineering Companies, and American Society of Civil Engineers. All rights reserved.

Table A-12: Annual Service Contract

Line ID	Parameter	Unit	Value
Supplier shall guarantee that Annual Service Contract Cost shall not increase at a rate greater than the Consumer Price Index (CPI) +1% per year for the warranty period specified.			
A	Guaranteed annual cost of remote monitoring and membrane performance, quarterly performance reports, and 24/7 continuous telephone support.	$/yr	Included in the MBR Capital Cost
B	Years	year	Warranty Period
C	Acknowledge above guarantee	Yes/no	Yes

Copyright© 2019 National Society of Professional Engineers, American Council of Engineering Companies, and American Society of Civil Engineers. All rights reserved.

Table A-13: Power Consumption Guarantee

Line ID	Parameter	Unit	Value
Supplier shall guarantee that Annual Power Usage associated with supplied MBR System will not exceed the supplier-determined limit listed in Row J below for the duration of the warranty period. Rows A-I are provided as summary information, but do not necessarily have to match the Guaranteed Annual Power listed in Row J.			
A	Permeate Pump Power (Table A-1, Row M)	kwhr/yr	n/a
B	Blower Power (Table A-2, Row Q) (Membrane + Process)	kwhr/yr	1,101,824
C	RAS Pump Power (Table A-3, Row ~~N~~ O)	kwhr/yr	193,080
D	Feed Forward Pump Power (Table A-4, Row M)	kwhr/yr	n/a
E	Miscellaneous Power (mixers, control panels, etc.)	kwhr/yr	135,692
F	Additional Power Consumption (supplier-specified safety factor)	kwhr/yr	20,000
G	Total Annual Power (Row A + B + C + D+ E + F)	kwhr/yr	1,450,597
H	ADF (5 MGD x 365 days/yr = 1825 MG/yr)	MG/yr	1825
I	Annual Power Consumption per MG (Row G / Row H)	kwhr/MG	795
J	Guaranteed Annual Power (kwhr per MG for annual average flow range 5.0 to 8.0 MGD)	kwhr/MG	795

Copyright© 2019 National Society of Professional Engineers, American Council of Engineering Companies, and American Society of Civil Engineers. All rights reserved.

Table B – Annual Operations and Maintenance

Line ID	Parameter	Factor	Value
B.1	Annual Power Cost (Table A-13.G)	X $0.20	$ 290,119
B.2	Annual Chemical Cost (Table A-5, A-6, A-7)		$ 5,855
B.3	Membrane Replacement Cost (Table A-9.E)		$ 155,366
Total Annual Operations and Maintenance Cost			$ 451,339

Rest of Page Intentionally Left Blank.

Copyright© 2019 National Society of Professional Engineers, American Council of Engineering Companies, and American Society of Civil Engineers. All rights reserved.

Tank and Building Cost Calculations

Bidders Notes

A. PROCESS BASIN COSTS

The construction costs of equalization and biological basins are based on the total liquid volume required for the proposed MBR System's hydraulic balancing and biological processes. For the purposes of comparison, a unit cost of $4 per gallon of liquid volume will be used, which includes excavation, backfill, and installed concrete costs.

Process basin square footage shall take the following into account:

1. Minimum Anoxic HRT is 1 hour.

2. For design purposes it is assumed that MBR MLSS inventory shall contribute to biological process requirements. Membrane Tank volume shall not be considered when determining SRT requirements unless otherwise requested by the MBR System Supplier

B. MBR BASIN COSTS

The construction costs of MBR basins are based on the total liquid volume required for the proposed MBR System's membrane units. For the purposes of comparison, a unit cost of $4 per gallon of liquid volume will be used, which includes excavation, backfill, and installed concrete costs.

C. MEMBRANE TREATMENT BUILDING COSTS

The construction cost for the new, 1-story membrane treatment building is based on the required footprint, in square feet, for the proposed system pumps, blowers, bulk chemical storage and feed systems, and instrumentation, MCC, and control panels. The total footprint shall include adequate space for equipment access and maintenance. The MBR System Supplier shall provide a breakdown of the space needed, listing area requirements by subsystem. For purposes of comparison, a unit cost of $500 per square foot will be used for building construction.

The evaluators reserve the right to compare each MBR System Supplier's recommended building footprint and may adjust the proposed value or request additional information if it does not appear reasonable.

Space allowance shall take the following into account:

1. A minimum of 3ft clearance around mechanical equipment & electrical

2. Permeate Collection System

3. Supplemental Aeration System

4. Membrane Zone Aeration System

5. Internal Recycle System

6. Integration and Controls System

7. Chemical Dosing System

Copyright© 2019 National Society of Professional Engineers, American Council of Engineering Companies, and American Society of Civil Engineers. All rights reserved.

a. Including storage and containment for a minimum of 1-mo. supply.

b. Incompatible chemicals (as defined by the International Fire Code) must be stored in separate, dedicated containment. Include all necessary containment areas to meet code

c. Chemical containment sized for 150% of the container/tank volume with a 1 foot wall height

8. Adequate height for lifting any equipment for maintenance activities

Table C-1: Construction Costs – Aerobic Volumes

Item	Parameter	Value	Unit	Notes
C.1	Aerobic Volumes	700,000	gal	Provide layout with dimensions.
C.2	Aerobic HRT	2.1	Hr	
C.3	Aerobic Construction Cost	2,800,000	$	C.1 x $4.00/gal

Table C-2: Construction Costs – Anoxic Volumes

Item	Parameter	Value	Unit	Notes
C.4	Anoxic Volumes	330,000	gal	Provide layout with dimensions.
C.5	Anoxic HRT	1.0	Hr	Min. 1.0 hr HRT
C.6	Anoxic Construction Cost	1,320,000	$	C.4 x $4.00/gal

Table C-3: Construction Costs – Membrane Basin

Item	Parameter	Value	Unit	Notes
C.7	Total Membrane Basin Volume	124,476	gal	Total basin volume, not displaced volume. Provide layout with dimensions
C.8	MBR Basin HRT	0.37	hr	
C.9	Membrane Zone Tank Cost	497,902	$	C.7 x $4.00/gal

Table C-4: Construction Costs – Treatment Building

Item	Parameter	Value	Unit	Notes
C.10	Treatment Building Plan Area	1,409	ft2	Provide layout with dimensions.
C.11	Building Cost	704,500	$	= C.10 x $500/ft2

Table C-5 Construction Costs – Tank

Item	Parameter	Value	Unit	Notes
C.12	Tank Cost	4,617,902	$	= C.3 + C.6 + C.9

Table C-6 – TOTAL CONSTRUCTION COSTS

Item	Parameter	Value	Unit	Notes
C.13	Total Construction Costs	5,322,402	$	= C.11 + C.12

Copyright® 2019 National Society of Professional Engineers, American Council of Engineering Companies, and American Society of Civil Engineers. All rights reserved.

Experience and Qualifications

The intent of this section is to establish the qualifications of the Supplier to provide adequate support before, during and after commissioning at the System level. To establish stability, each bidder shall provide an organization chart for each of the last five years including the names of the MBR (or Membrane) Manager, General Manager and President of the company and parent company if applicable. The bidder shall also provide the resumes of applicable lead operations staff.

The prospective Supplier shall submit the following information:

A. Identify the year that the MBR Equipment Manufacturer first began manufacturing MBR equipment for the treatment of municipal wastewater

B. Furnish a list of North American MBR Equipment installations for the treatment of municipal wastewater. The list shall be organized into three sections, including installations of less than 1 MGD, installations ranging in capacity from 1 to 5 MGD, and installations of 5 MGD or greater. The following information shall be provided with each listing:

   1. Owner and Location
   2. Peak Hydraulic Rated Capacity in MGD
   3. Annual Average Rated Capacity in MGD
   4. Biological Nitrogen Removal (yes or no)
   5. Type of WAS Thickening Equipment, if any
   6. Type of Dewatering Equipment, if any
   7. Identify System by Model or Type
   8. First Year of Operation (or identify as under construction)
   9. Reference Contact Name, Title, and Phone Number
   10. Installation Contractor Contact Name, Title, and Phone Number

C. Complete the MBR questionnaire, below, for a minimum of three operating plants in North America of larger than 1 MGD average capacity and with at least 12 consecutive months of operation. If the manufacturer has fewer than three MBR installations of this capacity or larger in North America, installations outside North America may be included.

D. Furnish a list of worldwide MBR Equipment installations, 1.0 MGD or greater, for the treatment of municipal wastewater separate from the North American installations. The list shall be organized in two sections: installations ranging from 1 to 5 MGD in capacity and installations of 5 MGD and greater. Provide the same information as requested for North American installations with each listing.

E. The supplier shall have at least three (3) operational installations in New York State, or if not, at least three (3) operational installations within states participating in Ten States Standards.

F. Identify which of the North American utilize the manufacturer's same model/type anticipated for the Caesars Lane WWTP.

Copyright© 2019 National Society of Professional Engineers, American Council of Engineering Companies, and American Society of Civil Engineers. All rights reserved.

Reference Operating Plants – Facility Information	
Item	**Parameter**
Facility Name:	Broad Run WRF
Location (Address, City, State):	44865 Loudoun Water Way Ashburn, VA 20147
Contact Person:	Michael R. Rumke, Superintendent
Telephone:	(703) 717-1859
Email:	mrumke@loudounwater.org

Reference Operating Plants – Flow Information		
Condition	**Design**	**Actual (Average over Last Year)**
Average Annual Daily Flow (MGD)	5.0/10.0	9.06
Maximum Month Average Daily Flow (MGD)	5.5/11.0	9.66
Peak Hourly Flow (MGD)	9.4/18.8	11.9

Note: Phase 1 (2008)/Phase 2 (2010)

Reference Project Personnel			
Condition	**Years with Company**	**Assigned to this Project (Yes/No)**	**Name**
Project Manager	14	No	Robin Puskas
Piping Designer	8/26	No	Adam Dunn/Jeff Penny
Integrator (Programmer)	8	No	Samia Sanai
Startup Technician	8	No	Adam Dunn
Warranty Support	21	Yes	Matt Stapleford

Reference Operating Plants – Influent Conditions (Primary Effluent)		
Parameter	**Design**	**Actual (Average over Last Year)**
BOD5 (mg/l)	168	-
TSS (mg/l)	108	107
NH3-N (mg/l)	26	45.6
COD (mg/l)		359
TKN (mg/l)	39	54.2
Minimum Temperature (deg C)	12	12
Oils and Grease (FOG) (mg/l)	<150	

Reference Operating Plants – Effluent Conditions		
Parameter	**Design**	**Actual (Average over Last Year)**
BOD5 (mg/l)	5.0	4.64 (COD)
NH3-N (mg/l)	1.0	0.012
Total Nitrogen (mg/l as N)	4	3.55
Turbidity Before Disinfection (NTU)	<0.5 NTU	< 0.5 NTU

Copyright© 2019 National Society of Professional Engineers, American Council of Engineering Companies, and American Society of Civil Engineers. All rights reserved.

Reference Operating Plants – MBR Conditions		
Parameter	**Design**	**Actual (Average over Last Year)**
MLSS (mg/l)	8,000 (Bioreactor)	9,838 (Bioreactor)
SRT (days)	12.0	12-14
AAF Flux (gfd)	12.77 (15.3)	11.07
MMF Flux (gfd)	15.5 (16.9)	11.81
PDF Flux (gfd)	24.0 (28.8)	12.15

Note: Flux in brackets is N-2 net flux.

Reference Operating Plants – Other Process Conditions	
Condition	**Facility Information**
Is denitrification required at this facility (y/n)	Yes
If yes, what is the total anoxic volume at this facility? (US gal)	2,094,000 (1,578,000) Volume in brackets is with Swing Zone in Aerobic Mode)
What is the total volume of the aeration zones at this facility? (US gal)	2,886,000 (3,402,000)
Does the total volume of the aeration zones include the MBR zone volume? (y/n)	No
If no, what is the total MBR zone volume? (US gal)	355,500 gal

Reference Operating Plants – Cleaning Conditions			
	Removed for Cleaning	**Clean In Place**	**Both**
Standard Membrane Cleaning Procedure(s) (select one and fill in clean information)		X	

Reference Operating Plants – Removed for Clean Information						
Process	**Is Process Used? Yes**	**No**	**Number of Workers Required for Process**	**How often is Process Performed (Times per Year)**	**Average Time per Cassette (hours)**	**Percent Solution (by weight)**
Manual Cleaning						
Hose Down						
Manual Debris Removal						
Manual Scrubbing						
Separate Chemical Solution Soak						
Sodium Hypochlorite						
Citric Acid						
Other?						
Other?						
Other Types of Cleaning						
List						

Copyright© 2019 National Society of Professional Engineers, American Council of Engineering Companies, and American Society of Civil Engineers. All rights reserved.

Reference Operating Plants – Clean In Place Information						
Process	Is Process Used? Yes	Is Process Used? No	Number of Workers Required for Process	How often is Process Performed (Times per Year)	Average Time per Cassette (hours)	Percent Solution (by weight)
In-Situ Chemical Solution Soak in Tank - Maintenance Cleaning						
Sodium Hypochlorite	X		N/A	52	0.83	0.02
Citric Acid		X				
Sodium Hydroxide		X				
Membrane Relax	X					
Other?						
Tank Drain, Chemical Solution Soak in Tank - Recovery Cleaning						
Sodium Hypochlorite	X			2	6-8	0.1
Citric Acid	X		N/A	2	6-8	0.2
Sodium Hydroxide		X				
Backpulse	X		N/A			
Extended Chlorine Backpulse		X				
Other Types of Cleaning						
List						

Note: Maintenance cleaning is done on a per train basis. Average time per cassette (hours) is stated as total maintenance clean duration per train in hours.

Copyright© 2019 National Society of Professional Engineers, American Council of Engineering Companies, and American Society of Civil Engineers. All rights reserved.

Reference Operating Plants – Facility Information	
Item	**Parameter**
Facility Name:	Linwood WRF
Location (Address, City, State):	500 Linwood Drive, Gainesville, GA 30501
Contact Person:	Dewayne Cooper, Plant Manager
Telephone:	(770) 550-0745
Email:	dcooper@gainesville.gov

Reference Operating Plants – Flow Information		
Condition	**Design**	**Actual (Average over Last Year)**
Average Annual Daily Flow (MGD)	4.6	2.924
Maximum Month Average Daily Flow (MGD)	5.0	3.123
Peak Hourly Flow (MGD)	10.1	

Reference Project Personnel			
Condition	**Years with Company**	**Assigned to this Project (Yes/No)**	**Name**
Project Manager	22	No	Rob William
Piping Designer	26	No	Jeff Penny
Integrator (Programmer)	22/21	Yes	Dorithy Courtney
Startup Technician	23	Yes	Sander Tulok
Warranty Support	21	Yes	Matt Stapleford

Reference Operating Plants – Influent Conditions		
Parameter	**Design**	**Actual (Average over Last Year)**
BOD5 (mg/l)	273	147
TSS (mg/l)	470	157
NH3-N (mg/l)	-	35.0
COD (mg/l)	-	-
TKN (mg/l)	62	Not recorded
Minimum Temperature (deg C)	12	Nor recorded
Oils and Grease (FOG) (mg/l)	< 150	23.71

Reference Operating Plants – Effluent Conditions		
Parameter	**Design**	**Actual (Average over Last Year)**
BOD5 (mg/l)	< 25	0.66
NH3-N (mg/l)	< 0.5	0.1
Total Nitrogen (mg/l as N)	-	0.355
Turbidity Before Disinfection (NTU)	< 1	0.051

Copyright© 2019 National Society of Professional Engineers, American Council of Engineering Companies, and American Society of Civil Engineers. All rights reserved.

Reference Operating Plants – MBR Conditions		
Parameter	**Design**	**Actual (Average over Last Year)**
MLSS (mg/l)	10,000 - 12,000 (Bioreactor)	10.851 (Bioreactor)
SRT (days)	30.2	38
AAF Flux (gfd)	7.8	4.95
MMF Flux (gfd)	8.5	5.30
PDF Flux (gfd)		

Reference Operating Plants – Other Process Conditions	
Condition	**Facility Information**
Is denitrification required at this facility (y/n)	No. Alkalinity recovery was included in the design.
If yes, what is the total anoxic volume at this facility? (US gal)	860,000
What is the total volume of the aeration zones at this facility? (US gal)	2,585,000
Does the total volume of the aeration zones include the MBR zone volume? (y/n)	No
If no, what is the total MBR zone volume? (US gal)	320,000

Reference Operating Plants – Cleaning Conditions			
	Removed for Cleaning	**Clean In Place**	**Both**
Standard Membrane Cleaning Procedure(s) (select one and fill in clean information)		X	

Reference Operating Plants – Removed for Clean Information						
Process	**Is Process Used? Yes**	**No**	**Number of Workers Required for Process**	**How often is Process Performed (Times per Year)**	**Average Time per Cassette (hours)**	**Percent Solution (by weight)**
Manual Cleaning (Not Applicable)						
Hose Down		X				
Manual Debris Removal		X				
Manual Scrubbing		X				
Separate Chemical Solution Soak (Not Applicable)						
Sodium Hypochlorite						
Citric Acid						
Other?						
Other?						
Other Types of Cleaning						
List						

Copyright© 2019 National Society of Professional Engineers, American Council of Engineering Companies, and American Society of Civil Engineers. All rights reserved.

Reference Operating Plants – Clean In Place Information						
Process	Is Process Used? Yes	Is Process Used? No	Number of Workers Required for Process	How often is Process Performed (Times per Year)	Average Time per Cassette (hours)	Percent Solution (by weight)
In-Situ Chemical Solution Soak in Tank - Maintenance Cleraning						
Sodium Hypochlorite	X			52	0.83	0.02
Citric Acid	X			52	0.83	0.2
Sodium Hydroxide		X		-		-
Membrane Relax	X					
Other?						
Tank Drain, Chemical Solution Soak in Tank - Recovery Cleaning						
Sodium Hypochlorite	X			1-2	8	0.1
Citric Acid	X			< 0.1	8	0.2
Sodium Hydroxide		X		-	-	-
Backpulse	X					
Extended Chlorine Backpulse		X		-	-	-
Other Types of Cleaning						
List						

Notes:

1. Backpulse included in design, but not used.
2. Maintenance cleaning is done on a train basis. Average time per cassette is stated as total maintenance cleaning duration per day per train in hours.

Copyright© 2019 National Society of Professional Engineers, American Council of Engineering Companies, and American Society of Civil Engineers. All rights reserved.

Reference Operating Plants – Facility Information	
Item	**Parameter**
Facility Name:	Brush Creek Wastewater Treatment Plant
Location (Address, City, State):	Cranberry, PA
Contact Person:	Mike Sedon, Manager, Brush Creek Plant Operations
Telephone:	Tel: (724) 776-4806 x 1300, Cell: (724) 272-1692
Email:	mike.sedon@cranberrytownship.

Reference Operating Plants – Flow Information		
Condition	**Design**	**Actual (Average over Last Year)**
Average Annual Daily Flow (MGD)	7.20	3.64
Maximum Month Average Daily Flow (MGD)	10.29	4.02
Peak Hourly Flow (MGD)	24.35	23.33

Reference Project Personnel			
Condition	**Years with Company**	**Assigned to this Project (Yes/No)**	**Name**
Project Manager	22	No	Rob Williams
Piping Designer	17	No	Ali Asfia
Integrator (Programmer)	21	Yes	Anil Varma
Startup Technician	12/18	No	Yousef Butt/Yuri Drozdowsky
Warranty Support	21	Yes	Matt Stapleford

Reference Operating Plants – Influent Conditions		
Parameter	**Design**	**Actual (Average over Last Year)**
BOD5 (mg/l)	105.7	238
TSS (mg/l)	82.2	284
NH3-N (mg/l)	23.3	31.6
COD (mg/l)	250.9	562
TKN (mg/l)		39
Minimum Temperature (deg C)	11	9.2
Oils and Grease (FOG) (mg/l)	<100	27.4

Reference Operating Plants – Effluent Conditions		
Parameter	**Design**	**Actual (Average over Last Year)**
BOD5 (mg/l)	<5	1.18
NH3-N (mg/l)	<1	0.21
Total Nitrogen (mg/l as N)	<4	22
Turbidity Before Disinfection (NTU)	<0.2 NTU, 90%, <0.5, 100%	

Note: Plant effluent TSS <= 2.0 mg/L

Copyright© 2019 National Society of Professional Engineers, American Council of Engineering Companies, and American Society of Civil Engineers. All rights reserved.

Reference Operating Plants – MBR Conditions		
Parameter	**Design**	**Actual (Average over Last Year)**
MLSS (mg/l)	8,000	8,200
SRT (days)		19.2 Total SRT
AAF Flux (gfd)	7.31 (8.76) 10.96 (4 trains)	4.11
MMF Flux (gfd)	10.45 (12.53)	15.98
PDF Flux (gfd)	19.24 (29.64)	4.16

Note: Flux in brackets is N-1 net flux.

Reference Operating Plants – Other Process Conditions	
Condition	**Facility Information**
Is denitrification required at this facility (y/n)	Not required by current permit. Included for alkalinity recovery and potential TN limit.
If yes, what is the total anoxic volume at this facility? (US gal)	376,000
What is the total volume of the aeration zones at this facility? (US gal)	1,656,000
Does the total volume of the aeration zones include the MBR zone volume? (y/n)	No
If no, what is the total MBR zone volume? (US gal)	4,570

Reference Operating Plants – Cleaning Conditions			
	Removed for Cleaning	**Clean In Place**	**Both**
Standard Membrane Cleaning Procedure(s) (select one and fill in clean information)	x	x	

Note: Client proactively removes some cassettes for hose down and inspection.

Reference Operating Plants – Removed for Clean Information						
Process	**Is Process Used? Yes**	**No**	**Number of Workers Required for Process**	**How often is Process Performed (Times per Year)**	**Average Time per Cassette (hours)**	**Percent Solution (by weight)**
Manual Cleaning						
Hose Down	x		3	1 Note 1	1	
Manual Debris Removal	x		3	1 Note 1	1	
Manual Scrubbing			3			
Separate Chemical Solution Soak						
Sodium Hypochlorite						
Citric Acid						
Other?						
Other?						
Other Types of Cleaning						
List						

Note 1: Client removed all 60 cassettes in Year 1, 10 cassettes per year since then.

Copyright© 2019 National Society of Professional Engineers, American Council of Engineering Companies, and American Society of Civil Engineers. All rights reserved.

Reference Operating Plants – Clean In Place Information						
Process	Is Process Used? Yes	No	Number of Workers Required for Process	How often is Process Performed (Times per Year)	Average Time per Cassette (hours)	Percent Solution (by weight)
In-Situ Chemical Solution Soak in Tank (Maintenance Clean)						
Sodium Hypochlorite	x		N/A	52	0.83	0.02
Citric Acid	x		N/A	52	0.83	0.2
Sodium Hydroxide		x				
Membrane Relax	x		N/A		0.008	N/A
Other?						
Tank Drain, Chemical Solution Soak in Tank (Recovery Cleaning)						
Sodium Hypochlorite	x			2	20	0.1
Citric Acid	x		N/A	2	20	0.2
Sodium Hydroxide		x				
Backpulse	x		N/A		N/A	
Extended Chlorine Backpulse		x				
Other Types of Cleaning						
List						

Note: Maintenance cleaning is done on a per train basis. Average Time per cassette (hours) is stated as total maintenance clean duration per day per train in hours.

Copyright© 2019 National Society of Professional Engineers, American Council of Engineering Companies, and American Society of Civil Engineers. All rights reserved.

Reference Operating Plants – Facility Information	
Item	**Parameter**
Facility Name:	Loch Sheldrake WWTP
Location (Address, City, State):	1077 State Route 52 Loch Sheldrake, NY 12759
Contact Person:	Michael A Herbert
Telephone:	Cell (845) 807-1728, Tel (845) 434-2709
Email:	mherbert@fallsburgny.com

Reference Operating Plants – Flow Information		
Condition	**Design**	**Actual (Average over Last Year)**
Average Annual Daily Flow (MGD)	0.562	0.589
Maximum Month Average Daily Flow (MGD)	1.013	2.88
Peak Hourly Flow (MGD)	1.124	2.88

Reference Project Personnel			
Condition	**Years with Company**	**Assigned to this Project (Yes/No)**	**Name**
Project Manager	27	No	Grant Delsnyder
Piping Designer	11	No	Katie Peach
Integrator (Programmer)	22/21	Yes	Dorothy Courtney, Anil Varma
Startup Technician	18	No	Yurij Drozdowsky
Warranty Support	21	Yes	Matt Stapleford

Reference Operating Plants – Influent Conditions		
Parameter	**Design**	**Actual (Average over Last Year)**
BOD5 (mg/l)	219	268
TSS (mg/l)	219	245
NH3-N (mg/l)	<1.86 May 1-Oct 31	13.6
COD (mg/l)		N/A
TKN (mg/l)	30	24.6
Minimum Temperature (deg C)	11C Bioreactor, 7C MBR	53.9
Oils and Grease (FOG) (mg/l)	<150	N/A

Reference Operating Plants – Effluent Conditions		
Parameter	**Design**	**Actual (Average over Last Year)**
BOD5 (mg/l)	5	3.2
NH3-N (mg/l)	1	5.87
Total Nitrogen (mg/l as N)	NO3/NO3-N <2.33 TN<4	N/A
Turbidity Before Disinfection (NTU)	< 1	< 1

Copyright© 2019 National Society of Professional Engineers, American Council of Engineering Companies, and American Society of Civil Engineers. All rights reserved.

Reference Operating Plants – MBR Conditions		
Parameter	**Design**	**Actual (Average over Last Year)**
MLSS (mg/l)	8,000/10,000	4,200
SRT (days)	10 d ASRT	12.1
AAF Flux (gfd)	7.91	N/A
MMF Flux (gfd)	9.51	N/A
PDF Flux (gfd)	10.55	N/A

Note: MLSS (mg/l): Bioreactor/MBR

Reference Operating Plants – Other Process Conditions	
Condition	**Facility Information**
Is denitrification required at this facility (y/n)	Yes
If yes, what is the total anoxic volume at this facility? (US gal)	80,000 gal pre-anoxic, 70,000 gal swing zone.
What is the total volume of the aeration zones at this facility? (US gal)	270,000 gal. (200,000 gal aerobic zone, 70,000 gal swing zone.
Does the total volume of the aeration zones include the MBR zone volume? (y/n)	No
If no, what is the total MBR zone volume? (US gal)	39,310 gal

Reference Operating Plants – Cleaning Conditions			
	Removed for Cleaning	**Clean In Place**	**Both**
Standard Membrane Cleaning Procedure(s) (select one and fill in clean information)		X	

Reference Operating Plants – Removed for Clean Information						
Process	**Is Process Used?**		**Number of Workers Required for Process**	**How often is Process Performed (Times per Year)**	**Average Time per Cassette (hours)**	**Percent Solution (by weight)**
	Yes	**No**				
Manual Cleaning						
Hose Down	X		1	1		
Manual Debris Removal	X		1	1		
Manual Scrubbing		X				
Separate Chemical Solution Soak						
Sodium Hypochlorite						
Citric Acid						
Other?						
Other?						
Other Types of Cleaning						
List						

Copyright© 2019 National Society of Professional Engineers, American Council of Engineering Companies, and American Society of Civil Engineers. All rights reserved.

Reference Operating Plants – Clean In Place Information						
Process	Is Process Used? Yes	No	Number of Workers Required for Process	How often is Process Performed (Times per Year)	Average Time per Cassette (hours)	Percent Solution (by weight)
In-Situ Chemical Solution Soak in Tank (Maintenance Cleaning)						
Sodium Hypochlorite	X		N/A	1-2	6	0.10
Citric Acid		X	N/A	1-2	6	0.20
Sodium Hydroxide		X				
Membrane Relax	X					
Other?						
Tank Drain, Chemical Solution Soak in Tank (Recovery Cleaning)						
Sodium Hypochlorite	X		N/A	104	0.02	
Citric Acid						
Sodium Hydroxide		X				
Backpulse	X		N/A			
Extended Chlorine Backpulse		X				
Other Types of Cleaning						
List						

Notes:
1 Loch Sheldrake is a 3-train MBR.
2 Maintenance cleaning is done on a per train basis. Average time per cassette (hours) is stated as total maintenance cleaning duration per day per train in hours.

Copyright© 2019 National Society of Professional Engineers, American Council of Engineering Companies, and American Society of Civil Engineers. All rights reserved.

BID BOND (DAMAGES FORM)

Bidder	**Surety**
Name: SUEZ WTS Systems USA, Inc. Address *(principal place of business)*: 3239 Dundas Street West Oakville, ON L6M 4B2	Name: Euler Hermes North America Insurance Company Address *(principal place of business)*: 800 Red Brook Boulevard Owings Mills, MD 21117
Owner	**Bid**
Name: **Town of New Windsor** Address *(principal place of business)*: **555 Union Avenue** **New Windsor, NY 12553**	Project *(name and location)*: **Caesars Lane WWTP MBR System Pre-Selection** Bid Due Date: **19 July 2022**

Bond 82733-ALLI-220

Bond Amount: Five Percent of Amount Bid (5%)

Date of Bond: 06/22/2022

Surety and Bidder, intending to be legally bound hereby, subject to the terms set forth in this Bid Bond, do each cause this Bid Bond to be duly executed by an authorized officer, agent, or representative.

Bidder	Surety
SUEZ WTS Systems USA, Inc. *(Full formal name of Bidder)*	Euler Hermes North America Insurance Company *(Full formal name of Surety) (corporate seal)*
By: Michael Bisson *(Signature)*	By: Jessica Iannotta *(Signature) (Attach Power of Attorney)*
Name: MICHAEL BISSON *(Printed or typed)*	Name: Jessica Iannotta *(Printed or typed)*
Titie: COMMERCIAL CONTRACTS MANAGER	Title: Attorney-In-Fact
Attest: Cameron Harrop *(Signature)*	Attest: Mariya Leonidov *(Signature)*
Name: Cameron Harrop *(Printed or typed)*	Name: Mariya Leonidov *(Printed or typed)*
Title:	Title: Witness as to Surety

Notes: (1) Note: Addresses are to be used for giving any required notice. (2) Provide execution by any additional parties, such as joint venturers, if necessary.

EJCDC® C-435, Bid Bond (Damages Form).
Copyright© 2018 National Society of Professional Engineer, American Council of Engineering Companies, and American Society of Civil Engineers. All rights reserved.

1. Bidder and Surety, jointly and severally, bind themselves, their heirs, executors, administrators, successors, and assigns to pay to Owner upon default of Bidder any difference between the total amount of Bidder's Bid and the total amount of the Bid of the next lowest, responsible Bidder that submitted a responsive Bid, as determined by Owner, for the work required by the Contract Documents, provided that:

    1.1. If there is no such next Bidder, and Owner does not abandon the Project, then Bidder and Surety shall pay to Owner the bond amount set forth on the face of this Bond, and

    1.2. In no event will Bidder's and Surety's obligation hereunder exceed the bond amount set forth on the face of this Bond.

    1.3. Recovery under the terms of this Bond will be Owner's sole and exclusive remedy upon default of Bidder.

2. Default of Bidder occurs upon the failure of Bidder to deliver within the time required by the Bidding Documents (or any extension thereof agreed to in writing by Owner) the executed Agreement required by the Bidding Documents and any performance and payment bonds required by the Bidding Documents.

3. This obligation will be null and void if:

    3.1. Owner accepts Bidder's Bid and Bidder delivers within the time required by the Bidding Documents (or any extension thereof agreed to in writing by Owner) the executed Agreement required by the Bidding Documents and any performance and payment bonds required by the Bidding Documents, or

    3.2. All Bids are rejected by Owner, or

    3.3. Owner fails to issue a Notice of Award to Bidder within the time specified in the Bidding Documents (or any extension thereof agreed to in writing by Bidder and, if applicable, consented to by Surety when required by Paragraph 5 hereof).

4. Payment under this Bond will be due and payable upon default of Bidder and within 30 calendar days after receipt by Bidder and Surety of written notice of default from Owner, which notice will be given with reasonable promptness, identifying this Bond and the Project and including a statement of the amount due.

5. Surety waives notice of any and all defenses based on or arising out of any time extension to issue Notice of Award agreed to in writing by Owner and Bidder, provided that the total time for issuing Notice of Award including extensions will not in the aggregate exceed 120 days from Bid due date without Surety's written consent.

6. No suit or action will be commenced under this Bond prior to 30 calendar days after the notice of default required in Paragraph 4 above is received by Bidder and Surety, and in no case later than one year after the Bid due date.

7. Any suit or action under this Bond must be commenced only in a court of competent jurisdiction located in the state in which the Project is located.

8. Notices required hereunder must be in writing and sent to Bidder and Surety at their respective addresses shown on the face of this Bond. Such notices may be sent by personal delivery, commercial courier, or by United States Postal Service registered or certified mail, return receipt requested, postage pre-paid, and will be deemed to be effective upon receipt by the party concerned.

9. Surety shall cause to be attached to this Bond a current and effective Power of Attorney evidencing the authority of the officer, agent, or representative who executed this Bond on behalf of Surety to execute, seal, and deliver such Bond and bind the Surety thereby.

10. This Bond is intended to conform to all applicable statutory requirements. Any applicable requirement of any applicable statute that has been omitted from this Bond will be deemed to be included herein as if set forth at length. If any provision of this Bond conflicts with any applicable statute, then the provision of said statute governs and the remainder of this Bond that is not in conflict therewith continues in full force and effect.

11. The term "Bid" as used herein includes a Bid, offer, or proposal as applicable.

Copyright© 2018 National Society of Professional Engineer, American Council of Engineering Companies, and American Society of Civil Engineers. All rights reserved.

CORPORATE ACKNOWLEDGMENT

PROVINCE
STATE OF ONTARIO

COUNTY OF HALTON

On this 27TH day of JUNE, 2022 before me

personally came

MICHAEL BENSON to me known,

who, being by me duly sworn, did depose and say that he/she resides in

OAKVILLE that he/she is the

COMM. CONTRACTS MGR. of SUEZ WTS Systems USA, Inc.

that corporation described in and which executed the above instrument; that he/she knows the seal of said corporation; that the seal affixed to said instrument is such corporate seal; that it was so affixed by order of the Board of Directors of said corporation, and he/she signed his/her name thereto by like order.

(SEAL)

David Blair Bingham, Notary Public,
Regional Municipality of Halton, limited to the attestation of instruments and the taking of affidavits, for SUEZ Water Technologies & Solutions Canada and its affiliates.
Expires December 18, 2023.

State of New Jersey
County of Morris } ss:

On June 22, 2022, before me, a Notary Public in and for said County and State, residing therein, duly commissioned and sworn, personally appeared

Jessica Iannotta

known to me to be Attorney-in-Fact of Euler Hermes North America Insurance Company the corporation described in and that executed the within and foregoing instrument, and known to me to be the person who executed the said instrument in behalf of the said corporation, and he duly acknowledged to me that such corporation executed the same.

IN WITNESS WHEREOF, I have hereunto set my hand and affixed my official seal, the day and year stated in this certificate above.

My Commission Expires April 16, 2024

April Perez Notary Public

APRIL PEREZ
NOTARY PUBLIC
STATE OF NEW JERSEY
MY COMMISSION EXPIRES APR. 16, 2024

EULER HERMES

16530

EULER HERMES NORTH AMERICA INSURANCE COMPANY
800 Red Brook Boulevard * Owings Mills, Maryland 21117

The number of persons authorized by this Power of Attorney is not more than: 6

POWER OF ATTORNEY

KNOW ALL MEN BY THESE PRESENTS: That EULER HERMES NORTH AMERICA INSURANCE COMPANY (EULER HERMES), a corporation organized and existing under the laws of the state of Maryland, does hereby nominate, constitute, and appoint the person or persons named below, each individually if more than one is named, its true and lawful attorney-in-fact, for and in its name, place, and stead to execute on behalf of EULER HERMES, as surety, any and all bonds, undertakings, and contracts of suretyship, or other written obligations in the nature thereof; provided that the liability of EULER HERMES on any such bond, undertaking, or contract of suretyship executed under this authority shall not exceed the limit stated below.

NAME		ADDRESS	LIMIT OF POWER
Megan J. Schlueter	Kristin S. Bender	445 South Street	Unlimited
Jessica Iannotta	Kelly O'Malley	Suite 210	
April D. Perez	Joanne Czlapinski	Morristown, NJ 07960	

This Power of Attorney revokes all previous powers issued on behalf of the attorney(s)-in-fact named above.

IN WITNESS WHEREOF, EULER HERMES has caused these presents to be signed and attested by its appropriate officers and its corporate seal hereunder affixed this 1st day of January, 20 21.

James Daly, President and CEO-The Americas

Keith Sherman, Senior Vice President and Chief Operating Officer-Surety

State of Maryland, County of Baltimore

On this 1st day of January, 20 21, before me personally appeared Keith Sherman, to me known, being duly sworn, deposes and says that he resides in Phoenix, MD; that he is the Senior Vice President and Operating Officer-Surety of EULER HERMES, the Company described herein and which executed the above instrument; that he know the seal of EULER HERMES; that the seal affixed to said instrument is such corporate seal; that it was so affixed by authority of the Board of Directors of EULER HERMES; and that he signed his name thereto by like authority.

Notary Public

Notarial Seal

This Commission Expires April 4, 2023

This Power of Attorney is granted by authority of the following resolutions adopted by the Board of Directors of EULER HERMES NORTH AMERICA INSURANCE COMPANY (Company) by unanimous consent on October 1, 2015.

RESOLVED: That the President, Executive Vice President, Senior Vice President, Vice President, Secretary, Assistant Vice Secretary, and Senior Vice President and Chief Operating Officer-Surety, be and hereby are authorized from time to time to appoint one or more Attorneys-in-Fact to execute on behalf of the Company, as surety, any and all bonds, undertakings and contracts of suretyship, or other written obligation in the nature thereof; to proscribe their respective duties and all respective limits of their authority; and to revoke any such appointment at any time.

RESOLVED FURTHER: That the Company seal and signature of the aforesaid officers and may be affixed by facsimile to any Power of Attorney given for the execution of any bond, undertaking, contract of suretyship, or other written obligations in the nature thereof, such signature and seal when so used being hereby adopted by the Company as the original signature of such officer and the original seal of the Company, to be valid and binding upon the Company with the same force and effect as thought manually affixed.

CERTIFICATION

I, Keith Sherman, Senior Vice President and Chief Operating Officer-Surety of EULER HERMES NORTH AMERICA INSURANCE COMPANY, do hereby certify that the foregoing Power of Attorney and the Resolutions of the Board of Directors of October 1, 2015, have not been revoked and are now in full force and effect.

Signed and sealed this 22nd day of June, 20 22.

Keith Sherman, Senior Vice President and Chief Operating Officer-Surety



EULER HERMES
Our knowledge serving your success

EULER HERMES NORTH AMERICA INSURANCE COMPANY

Statutory Statements of Admitted Assets, Liabilities, and Policyholders' Surplus

Statutory Basis at December 31, 2020

(In thousands, except share data)

Admitted Assets		**2020**
Bonds	$	350,802
Common stocks		9,128
Cash and cash equivalents		55,125
Other investments		30,500
Total cash and invested assets		445,555
Premiums receivable		119,974
Reinsurance recoverable on paid losses		8,577
Net deferred tax assets		14,172
Other admitted assets		26,396
Total admitted assets	$	614,674
Liabilities and Policyholders' Surplus		
Liabilities:		
Unpaid losses and loss adjustment expenses	$	214,647
Unearned premiums		155,439
Premium taxes, licenses, and fees		1,987
Ceded reinsurance premiums payable		15,406
Reinsurance payable on paid losses		1,732
Payable to parent, subsidiaries, and affiliates		10,896
Accounts payable and accrued expenses		56,855
Funds held under reinsurance agreements		1,274
Total liabilities		458,236
Policyholders' surplus:		
Common stock – par value $10 per share. Authorized, issued, and outstanding shares 250,000		2,500
Gross paid-in and contributed surplus		13,167
Unassigned surplus		140,771
Total policyholders' surplus		156,438
Total liabilities and policyholders' surplus	$	614,674

Euler Hermes North America Insurance Company
800 Red Brook Boulevard
Owings Mills, MD 21117
Tel 410 753 0753
Fax 410 753 0940
Toll Free 877 883 3224

A company of Allianz

EULER HERMES
Our knowledge serving your success

Louise Jordan, being duly sworn, affirms that she is the Chief Financial and Administration Officer of Euler Hermes North America Insurance Company, and that to the best of her knowledge and belief, the foregoing statement is a true and correct statement of financial condition of said Company as of 31 December 2020.

Subscribed and sworn to before me this 15th day of JUNE ,2021

Elaine A. McClean – Notary Public

Louise Jordan - CFAO

ELAINE A. MCCLEAN
My Commission Expires
NOTARY PUBLIC
05-18-2023
HARFORD COUNTY, MD

Euler Hermes North America Insurance Company
800 Red Brook Boulevard
Owings Mills, MD 21117
Tel 410 753 0753
Fax 410 753 0940
Toll Free 877 883 3224

A Company of Allianz

ZeeWeed membrane care, handling, and storage

1.0 PURPOSE

The purpose of this document is to outline the requirements associated with receiving, unloading and storing ZeeWeed* membranes and associated assemblies. Information is also included on storing wetted membranes. If, after reading this document, questions exist on proper membrane handling, contact SUEZ Water Technologies & Solutions (SUEZ) for additional guidance.

Although the ZeeWeed membranes are designed for maximum durability in water filtering applications, membranes are susceptible to irreversible damage if mishandled. Any concerns regarding membrane handling and potential damage should be addressed with SUEZ directly before any activities are undertaken at site that may cause an increased potential for membrane damage to occur. It should also be confirmed in advance that suitable Builders All Risk Insurance coverage is in place or other insurance coverage as deemed necessary by the project contract. Contact SUEZ for clarification as necessary.

⚠ WARNING



Follow All LOTO Procedures

Follow proper safety procedures to prevent injury when carrying out this procedure. Adhere to all Lock Out Tag Out (LOTO) and safe lifting procedures in accordance with company, site and local health and safety policies and procedures.



Read Entire Procedure

Read this procedure completely before proceeding.

⚠ CAUTION



Wear Appropriate PPE

This procedure requires that the operator wear Kevlar gloves, safety glasses, and protective clothing. Maintain baseline and task-specific PPE until task is completed.



Fall Protection Required

Fall protection is required if working around open tanks during membrane installation.

* Trademark of SUEZ; may be registered in one or more countries. If document printed in black and white, safety images may represent modified versions of ISO images.

NOTICES	
	Every effort has been made by SUEZ to provide current information while preparing this procedure. SUEZ maintains that depictions of methods and/or techniques and use of specific tools and/or apparatus shown within the situations portrayed are accurate at the time of printing. SUEZ accepts no liability for any reliance placed on the information contained herein.
	The installer in charge of the site is responsible for taking all reasonable precautions to prevent damage during installation and to prevent debris and foreign objects from falling into the membrane tanks after the cassettes are installed.

2.0 APPLICABILITY AND REVISIONS

This document applies to the ZeeWeed product line, including all ZeeWeed 500, 700, 1000 and 1500 series modules/elements and cassettes/racks. Three important documents to accompany this procedure include:

- **Equipment Acceptance Certificate and Checklist** – a document used to confirm the receipt of the goods to the satisfaction of the receiver (for membrane shipments, typically the Installer).
- **Document Membrane Pre-Installation Checklist** – a checklist to be completed by the Installer prior to membrane uncrating and installation.
- **ZeeWeed Uncrating and Installation Procedure** – a procedure specific to each membrane type that details the steps involved in uncrating and installing new membranes.

3.0 DEFINITIONS

- **Installer** – Organization that is contractually responsible for the project site.
- **ZeeWeed** – A hollow fiber outside-in and inside-out ultrafiltration membrane.
- **Module** – An assembly to house and contain the membrane fiber. One ZeeWeed membrane, containing numerous individual fibers grouped together, is called a module. The figures below show the different product modules.
- **Cassette/Rack** – An assembly to house and connect the modules. Cassettes/Racks can contain multiple module units.

* Trademark of SUEZ; may be registered in one or more countries. If document printed in black and white, safety images may represent modified versions of ISO images.



Figure 1 - 500C



Figure 2 - 500



Figure 3 - ZW1000



Figure 4 - ZW1000



Figure 5 - ZW1500



Figure 6 - 700B



Figure 7 - ZeeBlok

4.0 MEMBRANE SHIPMENT

During shipping of the ZeeWeed membranes from the SUEZ manufacturing facility to the intended site, the following conditions must be met:

- Control shipment temperatures in the range of 2 - 35°C (35° - 95°F) (Setpoint 20° C or 68°F).
- Never expose the shipping crates housing the membrane cassettes or modules to excessive vibration or large bumps. When shipping membrane cassettes or modules by rail or truck, take care to ensure that air suspension cars or trailers are utilized.
- In most cases, membranes will be shipped in populated cassette form (modules are already installed) in cassettes. The ZW1500 and the ZW700B are exceptions, with the modules shipped separately from the racks.
- After shipping, installation, and glycerin flush, an integrity check will be performed on the membranes to ensure no fibers were compromised during the handling process. To optimize performance, routine and pre-commissioning maintenance may be necessary to ensure the highest quality product prior to commissioning.

* Trademark of SUEZ; may be registered in one or more countries. If document printed in black and white, safety images may represent modified versions of ISO images.

5.0 HANDLING FACTORY SHIPPED SUEZ WATER MEMBRANES

5.1 General information

5.1.1 ZW500, ZW1000 Series, ZeeBlok cassettes

- Membrane cassettes are shipped in either a plywood or cartonplast packing crate.
- The cassette itself is sealed in a plastic bag to retain moisture and prevent damage tothe membranes due to drying.

Modules/Elements

- Individual membrane modules/elements are shipped in a cardboard box within a crate.
- The module itself is sealed in a plastic bag to retain moisture.
- Modules or elements in cardboard boxes should not be stacked more than six high.

5.1.2 ZW1500 and ZW700B series

Racks/Modules

- Individual membranes modules/elements are shipped in a cardboard box with a crate.
- The module is sealed in a plastic bag and/or has temporary port caps installed to retain moisture. The rack is shipped in a plywood packing crate.

5.2 Unloading membranes

The Installer is responsible for the prompt and proper unloading of all membrane equipment and materials received into his custody.

- Dock level, off-loading facilities are recommended.
- The wooden shipping crates are designed to be lifted from the bottom using a forklift.

Note that extended forks and an appropriately sized lift are required for the cassette crates.

* Trademark of SUEZ; may be registered in one or more countries. If document printed in black and white, safety images may represent modified versions of ISO images.

⚠ WARNING	
	**Forklift Hazard** It is recommended that an experienced/qualified forklift truck driver unloads the membranes from the carrier.
	**General Hazard** ZW500 and ZW1000 cassettes are shipped on their sides and will require up righting - follow all procedures carefully to prevent injury.
	**General Hazard** Do not stack shipping crates!

⚠ CAUTION	
	**Obstruction Hazard** Clear area of all obstacles and bystanders to avoid being struck by, struck against, or caught on the cassette.
	**Overhead Load Hazard** Only lift the cassette as needed to clear obstacles.
	**Overexertion Hazard** Use correct position and posture when lifting sides.

NOTICE	
	Damage incurred or observed during equipment off-loading needs to be immediately reported to your SUEZ representative.

5.3 Confirming equipment and materials

- Perform a cross-check on the shipment using the packing slip to confirm the delivery of membrane equipment.

  NOTE: Do not open membrane crates! Limit verification to external examination of crates.

- Check the equipment delivery for content and any damage that may have occurred during shipping or unloading.

* Trademark of SUEZ; may be registered in one or more countries. If document printed in black and white, safety images may represent modified versions of ISO images.

- Report any non-conformance immediately to your SUEZ representative (in writing). Provide digital pictures of damage.
- Refer to section 5.4 for *Confirmation of handling indicators*.
- Once the equipment shipment has been checked, the document provided by SUEZ (ref. *Equipment Acceptance Certificate and Checklist*) is completed and signed by the site organization's representatives.
- The Installer shall expeditiously replace all materials and equipment that are lost or damaged while in the custody of the Installer.
- Replacement materials and equipment of a type and quality equal to the original materials and equipment shall be acceptable to SUEZ and to the Owner.

5.4 Confirming handling indicators

SUEZ includes a series of shipping indicators to protect the integrity of the membrane cassettes while they are being shipped (Figure 8), in addition to the external indicators inside the crate (affixed to one of the cassette legs).

- The Installer's representative should record the indicator condition of the external indicators.
- At the time of discovery, the Installer must inform the SUEZ representative of any triggered indicators. (A triggered indicator indicates ideal shipping conditions were not maintained. Both inside and outside indicators should be cross checked. The SUEZ representative will evaluate membranes prior to installation).

	Freeze Indicator	Heat Indicator
Indicator location	External	External
When to check	At time of receipt	At time of receipt
Indicator location	Internal	Internal
When to check	During installation	During installation

- During membrane installation, the SUEZ representative onsite will also inspect and record the status of all indicators.
- On a cassette or shipping frame, the internal indicators will be in a plastic bag affixed to the cassette or shipping frame. For a crate of bagged and boxed modules, one of the top boxes will have the indicators inside and that box will have an "X" on it.

  NOTE: There are duplicate indicators inside the crate affixed to the cassette. These indicators are for SUEZ FSR use.



Figure 8 - Outside Indicators

* Trademark of SUEZ; may be registered in one or more countries. If document printed in black and white, safety images may represent modified versions of ISO images.

6.0 STORING MEMBRANES

The Installer shall provide all facilities and services required for the storage, maintenance, protection and security of the equipment and materials delivered by SUEZ.

Follow these conditions:

- Equipment and materials shall be stored in assigned lay-down areas.
- Stored equipment and materials shall be adequately supported and protected to prevent damage.
- Equipment shall be moved into the permanent building or onto its permanent foundation as soon as construction will permit.
- Stored materials and equipment shall not be allowed to contact the ground. In warehouses that do not have dry concrete or suspended floors, materials and equipment shall be stored on platforms or shoring.
- Indoor storage furnished by the Installer shall consist of suitable construction trailers or portable enclosures and shall be weather-tight, well ventilated, and secure against theft and vandalism.
- Access doors shall be adequate to accommodate the movement and handling of materials and equipment to be stored and shall be equipped with secure locks.
- Membrane cassettes/racks will be stored upright on a level surface.
- The membrane cassette crates must remain closed until the Installer begins membrane installation to prevent permanent membrane damage due to drying out.
- If upon removal from storage, mold is discovered on the membrane fibers, carefully repackage and contact SUEZ for direction.

6.1 Storage conditions – crated cassettes or membranes

⚠ CAUTION



Equipment Hazard

Membranes must be stored in a dark, dry area with a storage temperature between 5° - 35° C (40° - 95° F).

Ensure the following conditions when storing crated cassettes/membranes:

- Stored in a sheltered area protected from freezing, direct sunlight or extreme heat.
- Vacuum sealed bag should remain sealed until membrane installation is being performed.

It is recommended that the product be stored no longer than necessary prior to installation. Coordinate with SUEZ for appropriate shipment times. Maximum storage duration of a membrane is 12 months from the date of shipment.

* Trademark of SUEZ; may be registered in one or more countries. If document printed in black and white, safety images may represent modified versions of ISO images.

6.2 Storage conditions – bagged modules / elements

New modules preserved with glycerin solution, bagged and factory sealed, may be stored for up to 12 months. When storing bagged modules/elements, store in a sheltered area protected from freezing, direct sunlight, extreme heat and winds that could accelerate drying. The module/element should always be kept bagged and sealed.

Disassembly of cassettes/racks to replace modules requires attention and care. Contact SUEZ for re-assembly procedures, which include step-by-step instructions, bolt torques, and identification of non-reusable hardware.

⚠ CAUTION	
	**Pinch Hazard** To avoid being caught on or between cassette parts, use care during inspection and be alert to pinch points.
	**Fall Hazard** Ensure any glycerin spills/leaks are cleaned immediately.
	**Environmental Hazard** If there is the possibility of an environmental concern with a damaged membrane, don a facemask, repackage, and contact SUEZ.

6.3 Storage conditions – wetted membranes

It is important to note that ZeeWeed membranes should not be allowed to dry out as membrane properties will be adversely affected. **Drying may result in irreversible damage to the membranes.**

⚠ CAUTION	
	**Chemical Hazard** Use respirator or ensure sufficient ventilation. Wear protective equipment including a chemical resistant apron, neoprene gloves, and goggles c/w face shield, at a minimum.

* Trademark of SUEZ; may be registered in one or more countries. If document printed in black and white, safety images may represent modified versions of ISO images.

6.3.1 ZW500, ZW1000 series, ZeeBlok

If the preservative is flushed out or if the module has been in contact with water, the membrane must not be allowed to dry out under any circumstances.

The membranes may be left in air for a maximum of forty-five minutes out of direct sunlight and wind. After forty-five minutes, immerse the membranes in water. Spraying the membranes after this period is not sufficient to prevent drying-out and will not allow a longer period of contact with air. If membranes are **frequently lightly misted** (not sprayed with fire hoses or pressure washers) from the time they have been taken out of the water, they may be left in air for a maximum of 6 hours (5° - 35°C (40° - 95°F)).

Since the membranes are maintained wet, there is no need for specific re-wetting procedures. However, if necessary for other reasons (e.g., drinking water compliance, residual of preservatives) the standard procedures for rinsing and disinfection may be used before starting the operation. If it is impractical to immerse or repeatedly spray the membrane, clean the membrane, preserve it in glycerin solution and re-bag it according to membrane preservation procedures.

Refer to the *Operations & Maintenance Documentation Package* supplied with the system for further information. Longer storage durations are to be discussed with SUEZ on a case-by-case basis.

6.3.2 ZW700B

Ensure the following conditions when storing crated or bagged membranes:

- Store in a sheltered area protected from freezing, direct sunlight, extreme heat and winds that could accelerate drying.
- Keep vacuum-sealed bags or protective caps in place until membrane installation is performed.

It is recommended that the product be stored no longer than necessary prior to installation. Coordinate with SUEZ for appropriate shipment times.

New modules preserved with glycerin solution, bagged and factory sealed, may be stored for up to 12 months. After this time, wet the modules with non-hazardous solutions of water (RO-water quality)/glycerin/sodium bisulphite solution (75:25:0.25:wt%) and sealed them in plastic again. These solutions will control bacterial growth and dehydration. After this treatment, the modules can be stored for a further two months before the above process needs to be repeated.

6.3.3 ZW1500 and ZW700B series

Membrane fibers must always remain wet and must not be exposed to freezing conditions.

Short-term storage (< 1 week): Ensure that membrane modules are filled with potable water containing 1-2 mg/L Cl_2 residual.

* Trademark of SUEZ; may be registered in one or more countries. If document printed in black and white, safety images may represent modified versions of ISO images.

Long-term storage (> 1 week): Ensure that membrane modules are filled with potable water containing 5-10 mg/L Cl_2 residual. Check the preservative solution periodically and replace once per month.

Perform chemical cleaning before storage. Prior to startup, ensure that the membrane modules and equipment are sanitized.

6.4 Storage durations – wetted cassettes (ZW500, ZW1000 series, Zeeblok)

Once membranes have been installed in a tank, they need to be kept wet at all times. When the protective glycerin solution is removed, the membranes become susceptible to drying.

For storage periods of up to approximately 15 days, simple immersion of the cassettes in water containing sodium hypochlorite (NaOCl) with a maximum residual concentration of 3 mg/L is suitable. Monitor the residual every week and re-dose if the residual drops to less than 0.2 mg/L. Recovery cleaning of the membrane prior to storage is strongly recommended. If the membranes have been in service in an MBR application, it will be necessary to inspect them and remove debris (if necessary) prior to storage.

Periodic aeration may also be necessary to prevent anoxic or anaerobic conditions from developing in the tank. Test the water daily to ensure that the residual chlorine concentration is within acceptable limits; a simple swimming pool chlorine test kit is acceptable. Maintain a log recording daily NaOCl concentration and water temperature. Longer storage durations are to be discussed with SUEZ on a case-by-case basis.

6.5 ZW500, ZW1000 series, Zeeblok wetted membranes – long term removal from water

NOTICE



Contact SUEZ Customer Service for proper preservation instructions.

If the membranes have spent time in storage, carefully check for any signs of mold on the fibers. If any mold is present, immediately re-bag and follow the steps outlined in *SERV-0056 Disinfection of Moldy Cassettes/Modules*.

Contact SUEZ for advice on returning a sample for analysis.

* Trademark of SUEZ; may be registered in one or more countries. If document printed in black and white, safety images may represent modified versions of ISO images.

ZeeWeed 500 cassette removal

1.0 PURPOSE

The purpose of this document is to outline the steps required to remove a ZeeWeed* 500 cassette from a tank onsite. This procedure deals with lifting the existing cassette out of the tank. Contact SUEZ Water Technologies & Solutions (SUEZ) for clarification as necessary.

⚠ WARNING



Follow All LOTO Procedures

Follow proper safety procedures to prevent injury when carrying out this procedure. Adhere to all Lock Out Tag Out (LOTO) and safe lifting procedures in accordance with company, site and local health and safety policies and procedures.



Trained and Certified Personnel Only

Proper crane training is required. The crane must be inspected and certified, and the crane operators must be qualified and certified.



Read Entire Procedure

Read this procedure completely before proceeding.

⚠ CAUTION



Wear Appropriate PPE

This procedure requires that the operator wear Kevlar gloves, safety glasses, and protective clothing. Keep area around the system clear to minimize risk of slip/trip/fall. Maintain baseline and task specific PPE until completion of task. Fall protection equipment is required.

NOTICE



Every effort has been made by SUEZ to provide current information while preparing this procedure. SUEZ maintains that depictions of methods and/or techniques and use of specific tools and/or apparatus shown within the situations portrayed are accurate at the time of printing. SUEZ accepts no liability for any reliance placed on the information contained herein.

* Trademark of SUEZ; may be registered in one or more countries. If document printed in black and white, safety images may represent modified versions of ISO images.

2.0 APPLICABILITY AND REVISIONS

This document covers the ZeeWeed 500 product.



Figure 1 - ZW 500 cassette

3.0 MANPOWER REQUIREMENTS

The typical removal of a single cassette requires two people and can be done within 45 minutes, including pre-work and cassette drain time.

4.0 PREPARATION WORK

1. If membrane cleaning or fiber repairs will be performed, aerate the cassette (Figure 2) for 10-15 minutes without permeation prior to removal. This assists in removing any accumulated solids from the fiber bundles.

   Do not perform aeration if the cassette is to be inspected or weighed to assess sludge accumulation.

2. Prior to removal, plan where the cassette will be placed with available water supply and water run-off.

   Note any environmental conditions that could potential impact the membrane fibers.



Figure 2 - Cassette permeate and aeration pipes

3. To prepare the membrane train grating/covering, remove any lockdown components (i.e., bolts).

4. Prior to removal, close the air and permeate isolations valves on the cassette.

5. Loosen the bolts on the YN/Straub connector on the permeate line to allow sliding of the connector onto the portion of the permeate spool attached to the cassette.

6. Loosen the bolts on the YN/Straub connector on the airline to the cassette. This will allow the pressurized air to be released slowly. Do not open both sides of the connector or pull on the air line until the air has stopped hissing out of the connection. Slide the connector onto the portion of the air header spool attached to the cassette.

NOTICE	
⚠	If the train is turned off prior to removing the cassette, do not drain the tank.

* Trademark of SUEZ; may be registered in one or more countries. If document printed in black and white, safety images may represent modified versions of ISO images.

5.0 SAFETY

Before any work begins, make sure that the necessary planning and precautions are done in order to ensure that the membrane removal can be safely carried out. It is the responsibility of those removing the cassette to properly prepare.

- Before cassettes can be moved, ensure that the lifting crane is in good operating condition and is rated for the load.
- While maneuvering the cassette, ensure that no one is in its path or out of sight of the crane operator.
- Do not stand under the cassette.

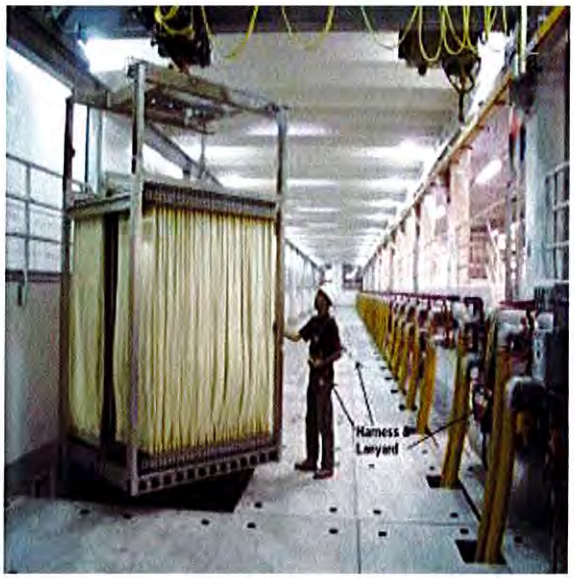

Figure 3 - Using harness/lanyard

NOTICE

It is crucial that fall arrest equipment be worn when working overtop the membrane tank. A fall arrest harness must be worn and appropriate tie-off lanyards must be used while installing and/or working on a cassette (Figure 3).

6.0 TOOLS REQUIRED

- Certified overhead crane or boom truck (5 tons or 10,000 lbs.).
- SUEZ-supplied 500 cassette lifting bracket (Figure 4). The bracket must be inspected for damage or corrosion that may undermine its structural integrity. It is the crane operator's responsibility to accept the condition of the hook and under the hook devices. The lifting bracket should have a label indicating its capacity, serial number, and manufacturer name and design criteria.
- Tools, as recommended by the supplier, required to remove the tank grating/cover.
- Gloves and other PPE as required.



Figure 4 - Lifting device

* Trademark of SUEZ; may be registered in one or more countries. If document printed in black and white, safety images may represent modified versions of ISO images.

7.0 LIFTING PROCEDURE

1. Connect the lifting bracket to the overhead crane using appropriate and certified equipment (Figure 5).

   Remove the tank cover/grating (if any) and place it in an area that will not interfere with cassette removal or create a trip hazard.

2. Disconnect the cassette from the beam brackets and remove the hitch pins. Use the hitch pins to attach the lifting bracket to the cassette arms.

   Move the permeate and air connections out of the way as necessary so that they will not catch on the train headers as the cassette is lifted.



Figure 5 - Connecting lifting bracket to overhead crane

3. Begin to lift the cassette upwards (Figure 6). If the crane has two speeds, the slower speed should be used for lifting cassettes. If necessary, gently (using low pressure) hose down the cassette while it is being lifted out of the tank.

   When the cassette has cleared the water surface in the tank, stop lifting and allow the cassette to drain for 10 minutes or until the water draining from the cassettes slows to a trickle.

4. Continue lifting until the bottom of the cassette is clear of the top of the tank. The cassette can now be moved to the work area.

   It is recommended that a guide rope be tied to one bottom corner of the frame to assist in controlling movement. For safety reasons, the tank cover/grating should be reinstalled while the cassette is out of the tank.



Figure 6 - Lifting the cassette upwards

5. Reverse through the above steps to return the cassette to the tank. Ensure that only a slow crane speed is used.

* Trademark of SUEZ; may be registered in one or more countries. If document printed in black and white, safety images may represent modified versions of ISO images.

ZeeWeed 500 64M module installation

1.0 PURPOSE

The purpose of this document is to outline the steps required to properly install modules into a ZeeWeed* 500 64M cassette. Contact SUEZ Water Technologies & Solutions (SUEZ) for clarification as necessary.

⚠ WARNING	
	**Follow All LOTO Procedures** Follow proper safety procedures to prevent injury when carrying out this procedure. Adhere to all Lock Out Tag Out (LOTO) and safe lifting procedures in accordance with company, site and local health and safety policies and procedures.
	**Read Entire Procedure** Read this procedure completely before proceeding.

⚠ CAUTION	
	**Wear Appropriate PPE** This procedure requires that the operator wear Kevlar gloves, safety glasses, and protective clothing. Maintain baseline and task-specific PPE until task is completed.
	**Fall Protection Required** Fall protection is required if working around open tanks during module installation.
	**Pinch Hazard** Be aware of possible pinch points and use care during installation.

* Trademark of SUEZ; may be registered in one or more countries. If document printed in black and white, safety images may represent modified versions of ISO images.

⚠ CAUTION	
	**Slip/Fall Hazard** Keep area around the system clear to minimize the risk of slip/trip/fall. Ensure any glycerin spills/leaks are cleaned immediately.
	**Overexertion Hazard** Use two people to uncrate the cassette and be alert to pinch points. Use correct position and posture when lifting sides and during installation.
	**Sharp Edges** Be aware of sharp edges. Take care when opening cassette bag per SUEZ instructions. There is a risk of being struck by, struck against, or caught on the cassette. Use care during inspection and be alert to pinch points.

NOTICE	
	Every effort has been made by SUEZ to provide current information while preparing this procedure. SUEZ maintains that depictions of methods and/or techniques and use of specific tools and/or apparatus shown within the situations portrayed are accurate at the time of printing. SUEZ accepts no liability for any reliance placed on the information contained herein.

2.0 APPLICABILITY AND REVISIONS

This document covers the ZW500 64M product line. Related procedures:

- *Glycerin Flush and Sanitization Procedure (SERV-0021)*
- *Module Removal Installation Tool (SERV-0030)*



Figure 1 - ZW500 cassette

3.0 MANPOWER REQUIREMENTS

The typical installation of a 500 module requires two (2) people at all times to prevent damage to the module. Refer to *SERV-0030 ZeeWeed 500 Module Removal Installation Tool* for instructions on removing a 500 module from a cassette.

* Trademark of SUEZ; may be registered in one or more countries. If document printed in black and white, safety images may represent modified versions of ISO images.

4.0 EQUIPMENT AND TOOLS

- Flashlight (optional)
- 500 module removal tool
- O-Ring NSF lubricant (e.g., Dow Corning 111)
- Stepladder

5.0 INSTALLING THE MODULES INTO THE CASSETTE FRAME

5.1 Unpacking the module

1. Each module is packaged in a sealed bag in a box. Using two people, remove the module from the box and lay it out flat on a clean table or work surface larger than the fully extended module.

2. Through the clear bag, inspect the module to ensure that no damage was incurred during shipping. Check that all O-rings are present. If an O-ring is missing, do not open the bag until a spare O-ring is located.

3. Carefully cut completely across one end of the bag; **do not** cut towards yourself or the fibers. With one person holding the header, the second person should pull on the bottom of the bag, sliding the bag off the module.

NOTICE	
	Be mindful of the module and membrane at all times when working around the cassettes. Do not allow clothing, body parts, tools, materials, jewelry etc. to scrape or touch the membrane – do not allow the module headers to bump up against the cassette frame or other modules.
	Quality testing has shown that the majority of module failures can be attributed to incorrect module installation. It is very important that the following instructions are followed to prevent damage. Under no circumstances should excessive force be used on the module to aid in insertion or removal from the cassette.
	Ensure the module is not allowed to dry out.

* Trademark of SUEZ; may be registered in one or more countries. If document printed in black and white, safety images may represent modified versions of ISO images.

5.2 Installing the module

Once the module is unpacked, the permeate spigots will be exposed.

1. Inspect the spigot for any cracks or damage. Confirm the black EPDM #118 O-rings are present, intact, and in proper placement on the permeate spigot.

2. O-rings must not be twisted, cracked, or worn. Apply a water-soluble lubricant (such as Lubrigel or KY Jelly) to the O-rings (Figure 2).



Figure 2 - Lubricating O-ring

3. If reinstalling a used module removed for inspection, hose down the module, removing any obvious solids and debris.

NOTICE	
⚠	Support the headers at all times! Do not allow the module headers to bump up against the cassette frame or other modules.
⚠	The installation of a 500D module must be completed with two people. It is very important that the bottom module header is not allowed to swing freely when the top header is slid into place. If the bottom header is not controlled during installation, it can swing into the center of the cassette and impact the bottom permeate collectors. Damage from this impact will require module replacement.

4. Use two people to lift up the module, being extremely careful not to let the fibers or the bottom header contact the ground (Figure 3). While one person climbs the ladder to install the top header, the second person must support the bottom header at all times.

   In all instances, try to install the modules by hand, and use the module installation tool only for assistance if required (refer to *SERV-0030 Module Removal Tool*).



Figure 3 - Carrying a module

* Trademark of SUEZ; may be registered in one or more countries. If document printed in black and white, safety images may represent modified versions of ISO images.

5. Insert modules slowly along the guide extrusion and into the permeate collectors (Figure 4). Only once the bottom header is successfully connected, should the top header be connected.
   Installing quickly and forcefully may roll the spigot O-rings or fail to seat the module into the permeate adaptor inserts correctly, and/ or pre-stress the plastic components of the header.



Figure 4 - Inserting module

6. Turn all the locking keys a quarter turn so that an audible click is heard. Locking keys will be perpendicular to the ground in the locked position.
   Avoid hammering or using a blunt force object. As a last resort only, the area under the claws can be lightly tapped with a mallet (Figure 5).



Figure 5 - Tapping lightly with a mallet

If a module does not easily slide into the cassette, visually check for the following:

- Check that the permeate adaptor inserts are seated properly. If they are not, reseat the inserts.
- Check that there is no extra plastic on the module header or urethane potting material overflowing the header. If necessary, use a coarse and then fine file to carefully file off any extra material that may be interfering with the insertion of the module into the saddle.

5.3 Final checks

Perform a final check on the cassette and confirm:

- all spigots are seated properly
- all modules keys are in the locked positions
- all hardware is secure and torqued to the proper specifications (see General Arrangement Drawings).

Once the module(s) have been installed and final check has been completed, it may be necessary to carry out a glycerin flush and sanitization procedure (refer to *SERV-0021* for detailed instructions), followed by a Membrane Integrity Test.

* Trademark of SUEZ; may be registered in one or more countries. If document printed in black and white, safety images may represent modified versions of ISO images.

1.0 Purpose

The purpose of this document is to outline the steps required to carry out fiber repairs on ZW500 modules.

Always follow proper safety procedures to prevent injury.

Safety Risk Assessment Recommendations

Required – Kevlar Gloves, Safety Glasses, Protective Clothing

Keep area around the repair area clear to minimize risk of slip/trip/fall. Maintain baseline and task specific PPE until completion of task.





2.0 Applicability and Revisions

This document covers the ZeeWeed® 500 product line. Related procedures: SERV-0013 Pneumatic Fiber Repair; SERV-0017 Membrane Test Procedure – Pressure Decay (DW); SERV-0018 Membrane Test Procedure – Wastewater; SERV-0024 Lower Upper Permeate Header to Increase Slack.

3.0 Tools Required

Tools/Equipment
Fiber Repair Kit **AND/OR** Pneumatic Fiber Repair Kit
Portable Pressure Test Device (PPDT)
Clean cloth rag

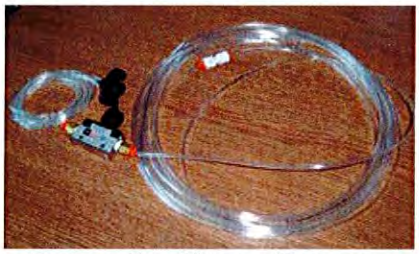

Pneumatic silicone dispenser



Fiber Repair Kit

Step 3.0 – Pressurizing Module

Referencing SERV-0017 Membrane Test Procedure – Pressure Decay (DW) or SERV-0018 Membrane Test Procedure – Wastewater, pressurize the module to the specified pressure for the membrane using a clean, oil free, dry source of compressed air. It will take approximately one minute to fully pressurize the module and evacuate the water from the fibers.

NOTE: The incoming airline should be equipped with a vent valve to safely release pressure.

Sharp objects and edges or improper handling can cause membrane damage. Remove all jewelry and watches before handling modules.

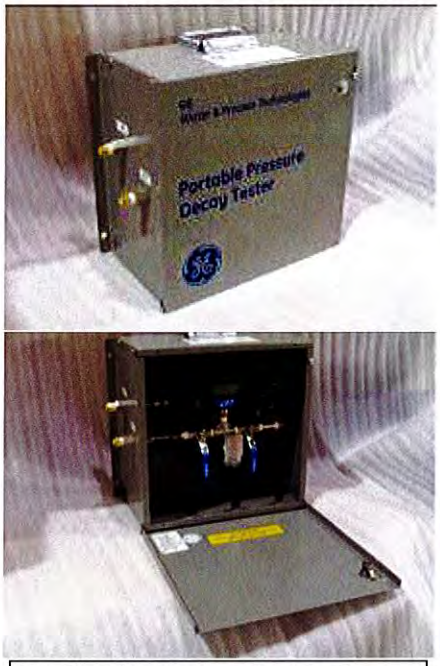

This Portable Pressure Test Device (PPTD) is designed for the evaluation of ZeeWeed® membrane integrity. Unit includes an air filter, fine and coarse air regulators, adjustable pressure relief protection and high sensitivity digital pressure gauge.

Safety Risk Assessment Recommendations

Risks	Risk Mitigation
-over pressurization hazard	- pressurize only to the specified pressure



Step 4.0 – Identifying the Leaks

Leaks can appear in a variety of bubble sizes. A broken fibre will produce a steady stream of 3 mm (1/8") bubbles. A damaged fibre will also produce a steady stream of bubbles but of smaller size. Bubbles can gather under the top header of the membrane and when enough volume as collected, comes to the surface in one large bubble. This may represent a number of smaller leaks and is to be taken into account during the diagnosis.

Once a leak has been found as per the following criteria; the module can be repaired using the fiber repair methods detailed below. Where possible, all repairs should be made on site. If a module requires difficult or numerous repairs, please contact the SUEZ WTS Lifecycle Technical Support for information on returning the module to SUEZ for analysis, repair or replacement.

Severe Leaks (Type 1)

Severe leaks at the top header of the 500a product can be due to urethane bonding two adjacent fibers firmly together - called "twinned" fibres. Handling and debris can cause the fibers to be pushed apart causing the removal of the urethane from the fibre surfaces and can begin to leak at this point. Debris can also remove sections of the membrane from the support fibre resulting in delamination and severe leaking. All of these problems are easily dealt with by cutting and sealing fiber ends. Severe leaks also cover more serious issues, such as fibres pulled completely out of the urethane, compromised urethane, cracked headers and manifolds, damaged glue joints, and pinched o-rings. All of the severe leaks produce large voluminous streams of bubbles even at low pressures.

Type 1



Moderate Leaks (Type 2)

Moderate leaks are evident by steady streams of small bubbles. This category covers problems including impact damage from debris, "pin holes" in the membrane, large dried-out pores, twinned fibers and other easily repaired items. These problems are easily resolved by cutting and sealing the fibers.

Type 2

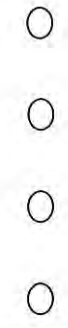

Minor Leaks (Type 3 and 4)

Minor leaks are often misinterpreted from simple air permeation of the membrane. Just as water permeates through the membrane, so can air if the water in the pores has been displaced by air. It is for this reason that the modules must be permeated before any bubble testing occurs. If the problem persists following permeation of the modules(s), the stream of small bubbles is likely due to a minor fiber defect.

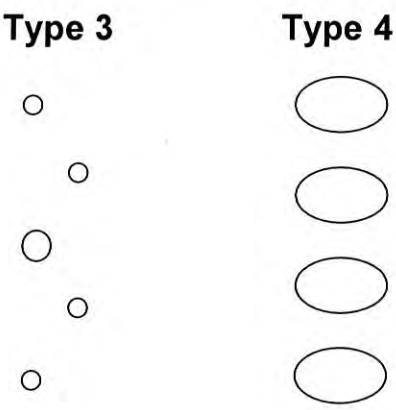

Note:

It is quite common to see Type 2, 3 and 4 bubbles when bubble testing a WW Flow Membrane at 3 psi. Note these types of bubbles are normal and will not impact your water quality and there is no need for repair.



Air diffusing from membranes

Every effort has been made by SUEZ Water Technologies and Solutions to provide current information while preparing this procedure. SUEZ maintains that depictions of methods and/or techniques and use of specific tools and/or apparatus shown within the situations portrayed are accurate at the time of printing. SUEZ accepts no liability for any reliance placed on the information contained herein.

Fibre Repair Method # 1
Axial Silicone Injection Method

If the leak is found in the middle of the lumen follow the following steps:

Step 1

Remove the membrane module from the tank and prepare for the fiber repair by filling one 10 cc syringe with Shin-Etsu silicon.

Push the tip of the needle through the fibre taking care to ensure that it does not go through the fibre completely, but only into the hollow centre (lumen). The correct positioning of the needle is 5 to 10 mm away from the leak zone, at an angle of 5 to 10 degrees.

A METAL SHIELD SHOULD BE USED TO PROTECT THE HAND HOLDING THE FIBER.

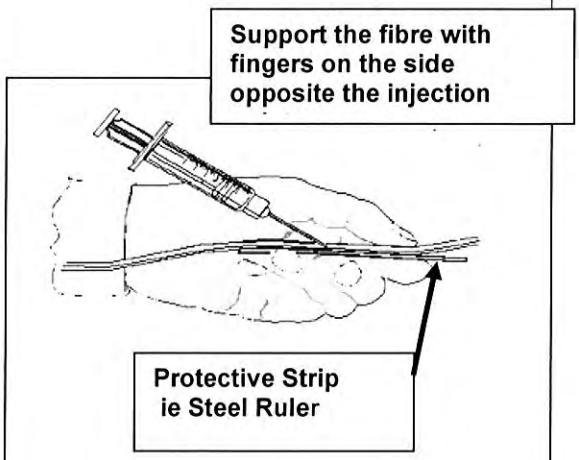

Safety Risk Assessment Recommendations for Injection Method

Risks	Risk Mitigation
- puncture hazard	- use metal shield to protect hand holding fibre
- slip hazard	- take care to wipe up any glycerin or water from the work area





Step 2

Apply light pressure to fill the lumen so that it is filled 5 to 10 mm past the leak zone on either end. Continue applying pressure while withdrawing the needle from the lumen ensuring puncture is sealed.

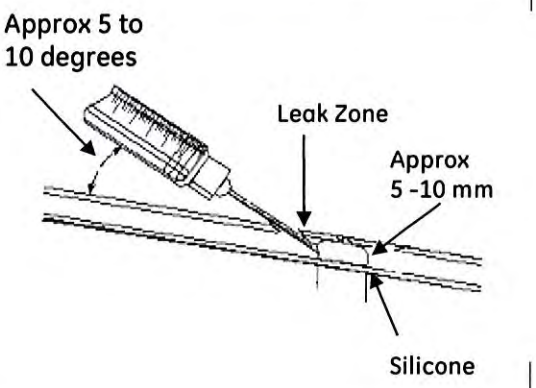

Step 3

Once the repair is complete, the cassette should be placed back into the process tank. Allow for a ten-minute curing time before carrying out further membrane testing.

Fiber Repair Method #2
Cutting and Sealing Method

When a fiber is damaged and an axial repair will not work, it needs to be cut and sealed. This section describes the procedure for the necessary repair using the cutting and sealing method.

CAUTION:

Do not separate strands that are glued together at the header, the membrane will be damaged!

Safety Risk Assessment Recommendations for Injection Method

Risks	Risk Mitigation
- puncture hazard	- use metal shield to protect hand holding fibre
- slip hazard	- take care to wipe up any glycerin or water from the work area
- cut hazard	- take care when cutting the fibres





Step 1

Remove the membrane module from the process tank. Locate the damaged fiber and carefully cut the fiber approximately 20 mm from the potting material at the Zee Weed top module header then proceed to carefully cut the fiber approximately 20 mm from the potting material at the Zee Weed bottom module header. See Figure 1.0 for correct cutting positions.

Note:
This procedure must be carried out for all modules, including the 500C.

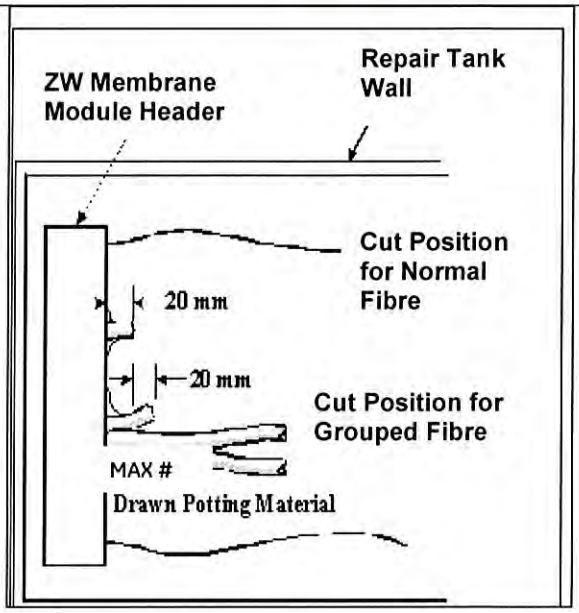

Step 2

Remove the membrane module from the tank and prepare for the fiber repair by filling one 10 cc syringe with Shin-Etsu silicon.

Insert the tip of the needle 10 mm into the center of the membrane lumen.

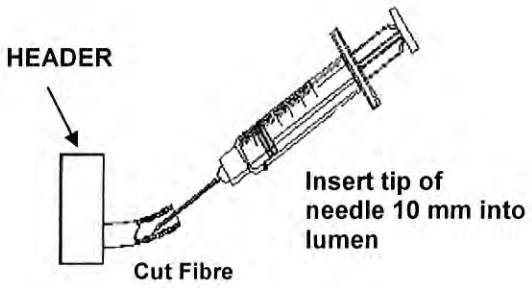

Step 3

Apply light pressure to inject the silicone. Fill the lumen back to the headers (as indicated by the darkened zone - see picture - this typically takes about 15 - 45 seconds). Begin to slowly withdraw the needle while still injecting the silicone to assure the lumen is completely filled. While still applying pressure to the syringe, use the tip of the needle to spread silicone over the cut end of the hole left in the fibre.

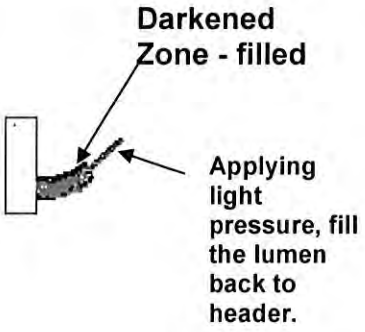

Step 4

Once the repair has been made on each end of the fiber at both the top and bottom headers, the cassette should be placed back into the process tank. Allow for a **ten-minute** curing time before carrying out further membrane testing.

Fiber Repair Method #3
Header Pin Method

The Pinning Method can be used to seal header holes left by pulled fibres. This method is not 100% reliable in sealing the holes and, as its use can produce leaks in neighbouring fibres, all leaking fibres should continue to be sealed with silicone. Pinning is approved only for non-drinking water applications using the 500 product.

This method is currently approved for non-drinking water 500 modules only.



Step 1

Locate the fibre hole in the module header from the pulled fibre. Note: Dropping the header (and inverting the module if the fibre is pulled from the top header) makes locating the leak much easier and you will be less likely to damage neighbouring fibres during the pinning process. Refer to SERV-0024 re dropping headers on 500a/b cassettes.



Step 2

Note the tool has two ends - a hollow end and concave end. Insert the thick end of the pin into the hollow tool end.



Step 3

Using the pin repair tool, push the pin into the hole until the tool tip touches the urethane surface.



Step 4

Using the concave end of the tool, carefully push the pin further into the urethane so that the top of the pin is just below the urethane surface. Do not add silicone - only place the dry pin in the hole. Push carefully to prevent the tool from slipping off the pin. Cut and seal the loose fibre at the other header using the cut and seal repair method.

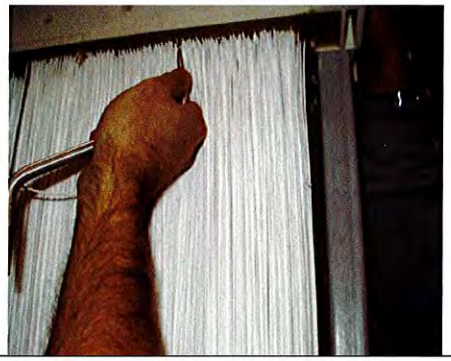

Safety Risk Assessment Recommendations for Injection Method

Risks	Risk Mitigation
- caught on hazard	- take care – modules and cassettes have sharp edges







Implied warranties, including but not limited to warranties of fitness for particular purpose, use or application, and all other obligations or liabilities on the part of the seller, unless such warranties, obligations or liabilities are expressly agreed to in writing by seller, are null and void.

8.b Membrane Warranty

A 15-year prorated warranty is offered on the membrane modules with the first 5-year offered as a full replacement warranty and the remaining 10-year as a prorated warranty. Refer to "Seller's Warranty – ZeeWeed Membrane Modules" in Section 8.d for a detailed description of the membrane warranty offered.

8.b.1 Warranty Provisions

In addition to the membrane warranty limitations as defined in the "seller's warranty – ZeeWeed membrane modules", the membrane warranty is subject to the following provisions:

- ❑ the equipment is operated and maintained at all times in accordance with the seller's operations and maintenance manual,
- ❑ the equipment is operated within the mixed liquor characteristics defined in Table 1 of this section,
- ❑ seller has, until performance of its obligation herein is met, reasonable access to the equipment and the operational data relating thereto,
- ❑ the buyer/owner furnishes adequate and competent operating, supervisory and maintenance staff, and necessary laboratory facilities with test equipment and personnel,
- ❑ the buyer/owner utilizes the services of seller until its performance obligations are met
- ❑ the buyer/owner supplies all necessary raw materials and services of a quantity and of a quality specified by the Seller,
- ❑ an adequate and continuous power supply is available that will enable operation of all required equipment,
- ❑ the following pre-treatment guidelines are followed:
  - ***fats, oil and grease (FOG)*** – FOG concentration shall not exceed 150 mg/L of emulsified FOG in the feed with no free oil and less than 10 mg/L of mineral or non-biodegradable oil.
  - ***pretreatment*** - A punched hole or woven wire mesh screen with a maximum size opening of no greater than 2 mm and without possibility of bypass of any particle larger than 2 mm in all directions must be included in the headwork's. Seller must be consulted regarding the type, capacity, and size opening of the screens that are to be installed.
  - ***process chemical additives*** - The use of any chemicals added to the wastewater treatment process (e.g.: polymers, flocculants, coagulants, antifoams) that may come in contact with the ZeeWeed membranes must be approved by seller prior to use. This includes chemicals used in

processes outside of the seller's system that may be transferred to the seller's system, such as in solids handling facilities.

Table 1: Mixed Liquor Characteristics for Warranty Purposes

Parameter	Design Value	Accepted Operating Range
Mixed liquor temperature (°C)	10	10 to 30
MLSS concentration in membrane tanks (mg/L) [1]	10,625	≤ 13,000
pH of mixed liquor in membrane tanks (SU)	7.0	6.5 to 7.5
Soluble $cBOD_5$ concentration in mixed liquor entering membrane tanks (mg/L)	5	≤ 5
NH_3-N concentration in mixed liquor entering membrane tanks (mg/L)	1.0	≤ 1.5
Colloidal TOC (cTOC) concentration in mixed liquor entering membrane tanks (mg/L) [2]	7	≤ 10
Soluble alkalinity of mixed liquor entering membrane tanks (mg/L as $caco_3$)	100	50 to 150
Time to filter (TTF) of mixed liquor in membrane tanks [3]	100	≤ 200
Material greater than 2-mm in size in mixed liquor in membrane tanks (mg/L) [4]	0	≤ 1

Notes:

1) Membrane tank MLSS concentration of up to 13,000 mg/L is permissible during MDF and PHF events only. Membrane tank MLSS concentration to be ≤11,000 mg/L during all other flow conditions.
2) Colloidal TOC (cTOC) is the difference between the TOC measured in the filtrate passing through a 1.5 µm filter paper and the TOC measured in the ZeeWeed membrane permeate.
3) Per seller's standard Time to Filter (TTF) procedure (available upon request).
4) Per seller's standard sieve test procedure (available upon request).

8.b.2 Membrane Performance

Seller warrants, subject to the provisions set forth above, that after stable operation of the seller's system has been attained and operators have acquired reasonable skills, the membrane modules supplied for this project will be capable of meeting the hydraulic capacities set forth in Section 3.a.1.1 and achieving the TSS and turbidity requirements in Section 3.a.1.3 of this proposal.

8.c Performance Warranty

This warranty provides protection and assurances to the buyer/owner with respect to the ability of the seller's MBR system to meet the established performance criteria. Based on the influent wastewater and/or mixed liquor characteristics and system operating parameters specified in this document, the equipment offered herein will be capable of meeting the performance defined below.

The MBR system performance will be demonstrated during a performance test (refer to the "performance test" section of this document for details on the performance test procedure). The performance warranty period is limited to the duration of the

performance test. In cases where the performance test is not completed within fourteen (14) days from the date of completion of start-up, testing and commissioning of the facility, or six (6) months from membrane shipment, whichever occurs first, the seller's obligations under the performance warranty will be deemed fulfilled.

Once the performance warranty period has expired, mechanical and membrane warranty provisions shall apply.

8.c.1 Biological Treatment System

Subject to the terms defined above, the influent wastewater characteristics defined in Table 2, and the biological treatment system operating parameters specified in Table 3, the equipment offered herein will be capable of meeting the permeate quality defined in Table 4.

Table 2: Influent Wastewater Characteristics for Biological Treatment System

Parameter	Design Value (Average)	Accepted Operating Range
Wastewater flow (MGD) [1]	8.0	See note 1
Wastewater temperature (°C)	10	10 to 30
Total suspended solids, TSS (mg/L)	74	≤ 74
Biochemical oxygen demand, BOD_5 (mg/L)	98	≤ 98
Total Kjeldahl nitrogen, TKN (mg/L)	27	≤ 27
Ammonia, NH_3-N (mg/L)	18	≤ 18
Total phosphorous, TP (mg/L)	6.0	≤ 6.0
Ph (SU)	7.0	6 to 9
Alkalinity (mg/L as $caco_3$) [2]	225	≥ 100
Phenols (µg/L) [3]	11	≤ 11

Notes:

1) The biological system design considers the maximum monthly flow (MMF) as the design flow condition. Refer to the membrane filtration system design (table 2) for other flow conditions.
2) In order to maintain sufficient permeate alkalinity and/or maintain pH within the bioreactor within acceptable limits, a supplemental NaOH dosing system is included in the system design. The need for alkalinity adjustment will vary according to influent characteristics and bioreactor performance.
3) As measured per Standard Methods for the Examination of Water and Wastewater Method 5530 or industry-approved equivalent standard analytical method

Table 3: Biological System Operating Parameters for Warranty Purposes

Parameter	Design Value	Accepted Operating Range
Mixed liquor temperature in bioreactor (°C)	10	10 to 30
MLSS concentration in bioreactor (mg/L)	8,500	≤ 8,500
MLVSS/MLSS ratio in bioreactor (-)	0.75	0.6 to 0.8
Aerobic solids retention time, ASRT (d) [1]	13	≥ 13
pH of mixed liquor in bioreactor (SU)	6.7	6.5 to 7.5

Dissolved oxygen (DO) concentration in anoxic zones (mg/L)	0.2	≤ 0.2
Dissolved oxygen (DO) concentration in aerobic zones (mg/L)	2.0	≥ 1.5

Note:

1) Aerobic SRT value is based on total aerated process volume in the aerobic bioreactor zone plus membrane tank volume.

Table 4: Guaranteed Biological Treatment System Performance

Parameter	Guaranteed Value [1]
Biochemical oxygen demand, BOD_5 (mg/L)	≤ 5.0
Ammonia, NH_3-N (mg/L)	≤ 1.8 (Oct 1st – May 31st) ≤ 1.2 (Jun 1st – Sep 30th)

Note:

1) Guaranteed concentrations are based on a monthly average value of a minimum of four (4) 24-hour composite samples collected at regular intervals with testing performed to applicable industry-approved standards.

8.c.2 Operations & Maintenance Costs

Subject to the terms defined above, the operation & maintenance costs for the equipment offered herein will not exceed the values defined in the bid forms. Note that the seller only guarantees operation & maintenance costs for the equipment that is included in the seller's scope of supply and limits the guarantee to the aggregate total in the tables. Seller is not responsible for the operation & maintenance costs of equipment that seller has not supplied.

Energy Consumption

Subject to the terms defined above, the equipment offered herein will consume no greater than the electrical energy defined in the bid forms. The energy guarantee value is based on operating at the average daily flow condition. Seller has assumed that this ADF flow will be treated with three (3) biological and three (3) membrane trains in service.

Membrane Cleaning Chemical Consumption

Subject to the terms defined above, the equipment offered herein will consume no greater than the chemical volumes defined in the bid forms. Seller guarantees the consumption of chemicals used for membrane system cleaning (i.e. sodium hypochlorite and citric acid).

8.c.3 Performance Test

A thirty (30) day performance test is to be carried out to demonstrate the ability of the seller's system to meet the performance warranty requirements. Within thirty (30) days of installation of the membrane modules, the buyer/owner shall start-up the Equipment. Thereafter, the buyer/owner shall use its reasonable best efforts to maintain continuous and stable operation of the system until the seller's obligation under this performance guarantee has been discharged. The buyer/owner shall notify the Seller that the system

is ready for the performance test or notify why the system is not ready and the party responsible for the lack of readiness shall promptly take the appropriate remedial action.

The buyer/owner shall afford the seller full access to the system and to all operating data pertaining to system performance until discharge of the latter's obligations hereunder. The performance test shall be conducted by the buyer/owner in accordance with a mutually agreeable test protocol and applicable standard techniques and operating procedures specified by seller in the operations and maintenance manual.

The performance warranty values are based on a monthly average value of a minimum of four (4) 24-hour composite samples collected at regular intervals with testing performed to applicable industry-approved standards. On-line instrumentation provided and grab sample testing performed is included as indications of the performance of the plant and to assist in the proper operation and control of the system. These results may include values beyond the stated warranty values (during process upsets or if instrument poorly/not calibrated, etc.) and additional composite testing as above must be performed to establish that the plant is not meeting performance requirements. All analytical work shall be carried out by the buyer/owner.

During the performance test, the MBR system operation should be according to the seller's operations and maintenance manual and the operating parameters specified in this section.

In the event of an interruption during the performance test due to any of the following events, the test shall be extended by the period of the interruption plus the time required to re-attain operating conditions in effect at the time of the interruption and data recorded during that period shall not be included:

1) power interruption in excess of sixty (60) minutes per day.

2) mechanical failure of the system, including a significant failure of the membrane system that decreases capacity below 75% for more than 24 hours.

3) any influent or operating parameter outside the accepted operating ranges defined in this section.

If during the execution of the performance test the wastewater flow and/or load into the plant are outside the specified acceptable operating ranges in this document, the seller will modify the test protocol within reason to mimic the design condition. The seller is not responsible for any limitations on the performance test protocol or results due to wastewater flow and/or load that is outside of the specified acceptable operating ranges.

When seller is of the opinion (based on the results obtained at the completion of the performance test), that the system has fulfilled the performance guarantees herein contained, it shall give written notice to the buyer/owner to that effect. Within two (2) weeks immediately following receipt of such notice, the buyer/owner shall notify the seller in writing that it accepts the system, or that it does not accept the system, in which latter case the buyer/owner shall state the specific reason for non-acceptance. In the absence of such reply from the buyer/owner within the two (2) week period, the system shall be deemed to have been accepted and the seller's obligation under this performance warranty shall be discharged.

If, after the system has been operated pursuant to the conditions hereinabove set forth, it becomes reasonably apparent, based on the results obtained at the completion of the performance test, that the system performance is short of the guaranteed performance,

then additional performance tests of the system shall be conducted by the buyer/owner whenever seller shall reasonably request. In such event, seller shall be responsible to undertake all necessary reasonable corrective measures in an effort, consistent with commercial and technical reasonableness, to bring the system up to the guaranteed performance levels.

If for any reason outside seller's control, the performance test can not be completed within sixty (60) days after installation of the membrane modules, or eighteen months from shipment or if any changes are made to the system without the seller's written consent that would affect the seller's ability to meet this performance warranty, then all obligations to the buyer/owner under this performance warranty will be deemed fulfilled.

Once the performance test has been satisfactorily completed, mechanical and membrane warranty provisions shall apply.

8.d Seller's Warranty – ZeeWeed Membrane Modules

This schedule sets out the warranty with respect to ZeeWeed membrane modules ("membrane modules"). No other warranties, expressed or implied are made in connection with the sale of these products, including, without limitation, warranties as to fitness for any purpose or use or merchantability of these products. The warranty provided herein will be the exclusive and sole remedy of Buyer. This warranty is not transferable.

1 Definitions

The following terms shall have the meaning set forth below when used in the warranty document:

a. "Buyer" means **Town of New Windsor, Orange County, New York**.

b. "Seller" means a business component of, or legal entity within the SUEZ Water Technologies & Solutions business which is selling the ZeeWeed membranes.

c. "Full replacement" means that in the case of a valid warranty claim for a membrane module failure, Buyer receives a replacement membrane module and does not pay for the value of use of the membrane module prior to failure.

d. "Prorated replacement" means Buyer pays for actual use of a membrane module from which Buyer has derived value over time. Prorated replacement allows the Seller to pay reasonable compensation under warranty for any product use not enjoyed by Buyer due to premature failure.

2 Warranty Product

This warranty applies to only the membrane modules supplied under the contract of sale. Membrane module means the hollow fiber ultrafiltration membranes and the potted plastic headers. This warranty does not cover air piping to the membrane module, permeate piping from the membrane module, piping connection fittings, connecting hardware and cassette frames with their associated components including but not limited to spacers, aerator tubes, aerator assemblies, screen, module dummies or module blanks.

3 Scope of Warranty

The Seller warrants that its membrane module(s) will be free of defects due to faulty materials or errors in manufacturing workmanship.

Regular membrane module inspection and normal fiber repair shall be the responsibility of Buyer.

All replacement membrane modules will be shipped on the basis of INCOTERMS 2020 FCA SUEZ manufacturing facility.

All ancillary costs including but not limited to bagging, boxing, crating, freight, freight insurance, applicable taxes, import duties, certifications, brokerage, receiving, forklift services, storage at site, reattachment hardware, hose/clamp/camlock replacement, crane services, installation, fiber repair materials, glycerin flushing, commissioning and waste disposal are the responsibility of Buyer.

4 Warranty Start Date

Membrane warranty will start on the earlier of:

a. The date that installation of the original membrane module(s) has been substantially completed, or

b. Three (3) months from the date of delivery of the original membrane module(s) to Buyer.

5 Warranty Duration

Total Warranty Duration: a total of **15 years** composed of a full replacement period and an extended prorated replacement period.

Full Replacement Warranty Duration: 5 years of full replacement warranty coverage.

Extended Prorated Replacement Warranty Duration: 10 years following the full replacement warranty period.

Membrane modules replaced under warranty shall assume the remainder of the warranty for the original membrane modules being replaced, with such warranty to be not less than a **24**-month full replacement warranty from the date of replacement with a new membrane module.

Replacement membrane modules are covered by warranty only to the extent of the warranty of the original membrane module which has been replaced. At all events, this warranty shall expire and be of no force or effect **24** months following the warranty start date.

6 Membrane Module Replacement Price – Prorated Replacement

The base Membrane Module Replacement Price (MMRP) used to calculate the prorated amount to be paid by the Buyer to replace defective membrane modules under warranty shall be shown in Table A-9 in the Bid Worksheets in Section 6. Membrane module prorated replacement price does not include bagging, boxing, crating, taxes and will be shipped on the basis of INCOTERMS 2020 FCA SUEZ Manufacturing facility.

For membrane modules supplied under valid warranty claims, the prorated share that the Buyer will pay is calculated as follows:

$$\text{Prorated Share of Price} = \frac{\text{Number of Whole Months Elapsed Between the Membrane Modules Claim Date and the Warranty Start Date} \times \text{MMRP} \times \text{Inflation Adjustment as Shown in Table A-9 in Bid Worksheets}}{\text{Total Warranty Duration in Months}}$$

Note that this Membrane Module Replacement Price (MMRP) is not applicable for membrane modules requested for purchase by Buyer for any non-warranty or other purposes, including but not limited to flux reduction, or plant hydraulic capacity increases. Modules purchased under these or other scenario's will be sold to Buyer by Seller at the list price in effect at the time of order.

7 Notification of Claim

All claims filed under this warranty shall be made in writing by Buyer within 30 days of identifying a defect.

Buyer shall provide the following information:

a. A description of the defect giving rise to the claim;

b. Photographs showing the manufacturing defect;

c. The serial number(s) of the membrane module(s) which is (are) the subject of the warranty claim; and

d. Operating data and repair history for the life of membrane modules which are the subject of a warranty claim.

8 Verification of Claim

After receipt of written notification of a defect, the Seller will promptly undertake such investigations as, in the Seller's opinion, are necessary to verify whether a defect exists. The Seller reserves the right to require additional data as necessary to validate claims. Buyer may, in the course of these investigations, be requested to return membrane module(s) to the Seller for examination (see section 12). The Seller may also conduct reasonable tests and inspections at Buyer's plant or premises. If the results of the investigation do not validate the defect claimed, Buyer will reimburse the Seller for all reasonable expenses associated with said investigation, including expenses for all tests, inspections, and associated travel.

9 Satisfaction of Claims

The Seller will have the right to satisfy claims under this warranty in a flexible manner. Such flexibility may include the repair of existing membrane modules or changes in operating protocols or membrane module replacement or by upgrading failed membrane modules with newer membrane module(s) that may embody design and efficiency improvements. Buyer consents to the supply of replacement membrane modules which may be of a different design than original membrane modules.

10 Operating Information

To maintain the membrane module warranty, membrane system operation records from initial start-up date until claim must be maintained by Buyer and made available to the Seller upon request. Records must be provided in sufficient detail as applicable to verify the subject of a warranty claim and can include but is not limited to, operation data including information on feed water quality, temperatures, flows, trans-membrane pressures, aeration rates, permeate quality, cleaning intervals, cleaning chemical concentrations, elapsed time since start-up, relevant analytical data and reporting of any screen bypass events.

Buyer shall maintain and share access to a single reference copy in electronic form of a membrane module map containing the history of activity by membrane module and the serial number for each module. Buyer shall log its procedures performed related to a membrane module including relocation of membrane modules, repairs, replacements and any other noteworthy events.

Buyer authorizes the Seller to conduct any reasonable review of operation and maintenance records or to inspect facilities where membrane modules are installed, upon reasonable notice to Buyer. Such reviews and/or inspections are intended to also assist the Seller and Buyer in detection of membrane system faults and to optimize the care and operation of the membrane modules.

11 Limitation of Warranties

Occurrence of any of the following as reasonably determined by the Seller will void this warranty:

a. A material failure to operate the membrane system in accordance with Seller's operations and maintenance manual supplied to Buyer as part of the contract, including material failure to adhere to the Seller's specified membrane module cleaning procedures and the use of anything other than Seller-approved membrane module cleaning agents.

b. Failure to adhere to the preventive maintenance program as presented in the Seller's operations and maintenance manual, in published product manuals and in specifications.

c. Failure to adhere to all transportation and storage requirements. ZeeWeed membrane modules may be stored up to 12 months from date of receipt and must be transported and stored in original intact packaging out of direct sunlight in ambient temperatures between 5-35 Degrees Celsius. Storage beyond 12 months from date of receipt requires a written request to SUEZ to maintain membrane module warranties.

d. Introduction of destructive foreign materials and chemical agents into the membrane module.

e. Failure to maintain and provide system operating data and repair history for the life of membrane modules which are the subject of a warranty claim.

f. Physical abuse or misuse, incorrect removal or installation of membrane modules by non-Seller personnel including fiber damage caused by operator error in handling of membrane modules or cassettes.

g. Unauthorized alteration of any components or parts originally supplied by the Seller.

h. Intentional damage.

12 Return Procedure

In the event that the return of a membrane module is required pursuant to this warranty, Buyer will first obtain a Return Goods Authorization (RGA) number from the Seller. Membrane module(s) shipped to the Seller for warranty examination must be shipped freight prepaid in environmentally controlled freight and storage with ambient air temperature between 5-35 Degree Celsius. If Buyer desires temporary replacement membrane module(s) to replace those alleged to be defective and returned to the Seller for warranty examination, Buyer shall be responsible for the cost associated with any such replacements until examination of the returned membrane modules pursuant to this warranty is complete. Any membrane module examined by Seller as part of a warranty claim where the membrane module is subsequently found to be performing as warranted or where a membrane module failure is not covered

under the warranty will be returned to Buyer, freight collect or disposed of by Seller and the cost associated with any membrane analysis and diagnostic work will be levied against the Buyer based on SUEZ standard labor rates.

13 Disclaimer and Limitation on Liability

To the maximum extent permitted by law, in no event shall Seller be liable for any loss of profit or revenues, loss of production, loss of use of equipment or services or any associated equipment, interruption of business, cost of capital, cost of replacement water or power, downtime costs, increased operating costs, claims of Buyer's customers for such damages, or for any special, consequential, incidental, indirect, punitive or exemplary damages arising out of or relating to the performance or actual or alleged breach of the agreement, regardless of whether a claim is based in contract (including warranty or indemnity), extra-contractual liability, tort (including negligence or strict liability), statute, equity or any other legal theory.

9 Commercial Notes

9.a System Price

Pricing shall be as outlined on the bid form included in **Section 6** of this proposal.

9.b Price Validity and Price Escalation

The quoted system price will be valid until **October 18, 2022**. If a formal Purchase Order or Procurement Agreement is not received and accepted within this Validity Period, both the pricing and delivery schedules are subject to review and adjustment.

The proposed system pricing is based upon receipt of a Notice to Proceed (NTP) for Manufacturing/Equipment Procurement being provided by **July 15, 2024**.

Of the Total Bid Price, SUEZ proposes that escalation be calculated on the following material costs: equipment, instruments, controls, membranes and cassettes.

Portion of Total Bid Price Subject to Escalation: **$2,520,225.00 USD**

Price escalation would be calculated on the bid available date for the General Construction Contract and be the greater of, $0 USD, or the Seller's actual realized cost increases for materials as specified in Addendum No. 1, Agreement Article 2.05.

SUEZ agrees to provide a detailed cost breakdown within 7 days of notice of intent to award the membrane supply pre-selection agreement to SUEZ.

9.c Taxes

Per the Instructions to Bidders, the Owner is exempt from payment of sales and compensating use taxes of the State of New York, and cities and counties, on all materials supplied to the Owner pursuant to this contract.

Pricing provided herein does not include any taxes or duties.

9.d Order Confirmation Center

In order to facilitate efficient order handling, Seller has instituted an Order Confirmation Centre (OCC). All Purchase Orders or Contracts being issued to Seller are to be directed to OCC following the methods indicated below:

❑	Via email:	WTS.equipmentpo@suez.com
❑	Via facsimile:	905-469-2236
❑	Via courier:	**SUEZ WTS Systems USA, Inc.** 3239 Dundas Street West Oakville, Ontario L6M 4B2 Attn: OCC

9.e Delivery

All pricing is FOB project site. Delivery to the project site is conditional upon the provision of access roads of a nature that will permit access by tractor-trailers. Off-loading and positioning of equipment at the job site are not included.

9.f Terms and Conditions

Seller has prepared this proposal based on the Terms and Conditions included with the Request for Proposals and the clarifications to those Terms and Conditions as provided in Section 2.g – Compliance Statement of this proposal.

10 Value Engineering

SUEZ has made every effort to abide by the engineer's design and specifications as detailed in the Caesars Lane WTF MBR System Pre-Selection RFP. Our proposal and capital price are reflective of this effort, which we hope will facilitate the assessment of various membrane vendor offers.

In this section, we have provided a few alternative design concepts for consideration. SUEZ would be pleased to discuss these, or any other design alternative, in more detail upon request.

Anoxic Tank HRT

The minimum anoxic zone HRT for the project is specified as ≥1 hour at MMAF in Section 455000, Item 2.1.B.5.c. SUEZ has reviewed the biological design and believes the HRT and associated anoxic volume can be reduced as follows:

Anoxic HRT	US Gal.	Bioreactor Cost ($USD)
Specified	330,000	$1,320,000
Design Alt.	200,000	$800,000
	Estimated Savings	$520,000

The proposed design alternative will provide ≥1 hour HRT at ADF and have minimal impact on bioreactor pH under the ADF, MMAF, and MDF flow/load conditions (from a pH of ~6.7 to ~6.65 S.U.). For the specified influent alkalinity of 225 mg/L and assumed influent pH of 7 S.U., NaOH addition for alkalinity and pH control will not be required.

Permeate Pump Alternative

SUEZ has proposed a siphon design at this facility as our base offer. While we believe this will provide exceptional value, we recognize that there may be unidentified site constraints that we are unaware of, or potentially some unreconcilable reluctance to implement a full siphon design.

SUEZ has provided a permeate pump design alternative should the Town wish to use permeate pumps. The offered permeate pump equipment supply scope includes permeate pumps, motors, VFDs, pump suction and discharge isolation valves, flow meters, and instrumentation.

The equipment capital cost for equipment provided by SUEZ will be the same for both the full siphon and pumped alternative, i.e., the Price Add/Price Deduct for the pumped alternative is $0.00 USD.

Estimated permeate pump power consumption is provided for reference in Table A1 in Section 6 of this proposal. Permeate pump cut sheets are provided in Appendix A.

Partial Siphon

SUEZ determined that 7.2 psi of transmembrane pressure (TMP) was available within the system accounting for all losses including the piping system and losses across the flow control valve. This limit is suitable for full siphon operation. The SUEZ siphon design under these conditions is detailed in Section 3.a.1

While permeate pumps are not required to assist the filtration process in the current configuration, inclusion of permeate pumps, or inclusion of future space for permeate pumps would allow the facility to operate as a partial siphon plant if desired, either now, or in the future.

A partial siphon design would allow the permeate pump and flow control valve to function independently. Each would be plumbed in parallel such that either can operate based on the driving head available within the system. This approach has been used previously at numerous facilities where insufficient siphon head was available for full siphon operation.

SUEZ has not developed the equipment supply price impact of this configuration, but can upon request.

Axial Flow RAS Pumps



The proposed SUEZ design comprises end-suction RAS pumps and installation of the RAS header above the RAS pumps. However, axial flow pumps with horizontal suction and discharge piping connections may be considered for this low-head application. An example of this proposed arrangement is shown in the adjacent graphic. The proposed pump geometry would direct the RAS pump discharge to a common RAS collector located underneath the equipment building. This would allow the RAS collector to be routed underground; thereby eliminating the need to support the RAS collector.

SUEZ has not developed pricing for this alternative, but can upon request.

Appendix A – Major Equipment Cut Sheets/Brochures

1. Aerzen membrane blower
2. Aerzen process blower
3. Sulzer submersible mixer
4. SSI fine bubble diffuser
5. DeZurik V-Port regulating valve
6. Sulzer Submersible backpulse pump
7. Sulzer end-suction RAS pump
8. Prominent NaOH dosing skid
9. Prominent Sodium hypochlorite/citric acid dosing skid
10. IBC chemical day tank
11. Atlas Copco compressor
12. IFC strainer
13. Bray Butterfly Valve
14. Hach turbidimeter
15. Borger PD Pump for Alternative Permeate Pump Design

Aerzen Canada
980 rue Valois, Vaudreuil-Dorion, Québec J7V 8P2

Customer Reference: 360077 - Orange Town of NY, USA
Aerzen Reference: SQ-22-259014b

Submitted by: Nikita Assilamehoo
nikita.assilamehoo@aerzen.com

SCOPE OF SUPPLY

Membrane blowers with VFDs

2 Aerzen Generation 5 Blower Package - GM 50L DN 200 - Pressure - including:

Aerzen GM 50L Blower
Drive Motor - Teco: 60hp, 1800rpm, TEFC, 460V/60Hz

Base with integrated reactive type discharge silencer
Intake filter silencer
Hinged motor support as automatic belt tensioning device
Set of vibration isolation mounts
Narrow v-belt drive with guard - 1 set
Spring loaded relief valve
Discharge manifold with externally accessible integrated check valve
Flexible connector with clamps for schedule 40 pipe, discharge
Acoustic Enclosure - Indoor/Outdoor

Instruments
Pressure gauge c/w isolation ball valve (2x)
Dirty filter indicator (2x)

Optional Accessories
Inlet flexible sleeve - DN 200 (8")
Motor Protection - 1 Thermistor/Ph

Optional Instruments
Hood Space Heater (2x)

Optional Spare Parts
1 Year Maintenance Kit (1 x V-Belt Set, 1 x Intake Filter)
2 Year Maintenance Kit (1 x V-Belt Set, 1 x Oil Change (Delta Lube), 2 x Air Filter)

Connection Points:
Intake Connection: Local
Discharge Connection: DN 200 - 8"

Exclusions: See page 2

Aerzen Canada
980 rue Valois, Vaudreuil-Dorion, Québec J7V 8P2

Customer Reference: 360077 - Orange Town of NY, USA
Aerzen Reference: SQ-22-259014b

PERFORMANCE DATA

Aerzen Blower Package - GM 50L DN 200 - Pressure

Configuration: **G5**

		Capacity	Min F		
Conditions:	**Scfm**	**1488**	**263**	**1026**	**275**
Flow at inlet conditions	m³/min	44.09	7.8	50.55	50.55
	Icfm	**1557**	**275**	**1073**	**287**
Inlet pressure (abs.)	bar	1.012	1.012	1.012	1.012
	Psi	14.68	14.68	14.68	14.68
Pressure differential	mbar(g)	379	379	321	321
	Psig	**5.5**	**5.5**	**4.65**	**4.65**
Inlet temperature	°C	29.44	29.44	29.44	29.44
Discharge temperature	°C	65	80	61	71
Blower speed	RPM	3023	756	2145	756
Blower maximum speed	RPM	3800	3800	3800	3800
% of maximum blower speed		80%	20%	56%	20%
Power required at shaft (with accessories) **	kW	36.0	8.2	20.5	7.0
	HP	48.3	11.0	27.5	9.4
Total Power (Wire to Air):	HP	53.5	12.2	30.4	10.4
Motor rating	**HP**	**60.0**			
Motor speed	RPM	1775	444	1259	444
Motor frequency	Hz	60	15	43	15

Noise level without acoustic hood	dB(A)	97
Noise level with acoustic hood	dB(A)	70

Tolerances as per EN 10204, in accordance with standard ISO 1217:
Flow at inlet conditions / Power required at shaft +/- 5%

Blower package noise level:
Free field measurement at 1m from the complete blower package (tolerance +/- 2 dB(A))

Tests and measurements:
Blower stage: 1.5 hour flow test at the factory (Germany) on a calibrated test bed, at maximum operating conditions and according to DIN 1945. acceptance tolerance: +/- 5%.
A complete test report is available upon request.

On Site Commissioning
Available upon request, charges to be advised.
- Any commissioning activity is subject to two weeks prior notice and completion of commissioning checklist.
- Any on-site activity outside the time indicated will be billed according to the Aerzen Standard Rate Sheet

Exclusions
Control Panels, Motor Starters, Piping and Electrical Connections
* Unloading valves are required for reduced voltage starters

Warranty
Blowers including accessories are warranted for a period of 12mo / max 18mo after delivery and after provisional acceptance of the work against defects in workmanship and design. This warranty does not cover wearing parts unless such parts are defective during shipping / commissioning.
As per Aerzen standard warranty terms.

** Power at shaft excludes drive motor and belt drive

Aerzen Canada
980 rue Valois, Vaudreuil-Dorion, Québec J7V 8P2

Customer Reference: 360077 - Orange Town of NY, USA
Aerzen Reference: SQ-22-259014b

Submitted by: Nikita Assilamehoo
nikita.assilamehoo@aerzen.com

SCOPE OF SUPPLY

Membrane blowers without VFDs

3 Aerzen Generation 5 Blower Package - GM 50L DN 200 - Pressure - including:

Aerzen GM 50L Blower
Drive Motor - Teco: 60hp, 1800rpm, TEFC, 460V/60Hz

Base with integrated reactive type discharge silencer
Intake filter silencer
Hinged motor support as automatic belt tensioning device
Set of vibration isolation mounts
Narrow v-belt drive with guard - 1 set
Spring loaded relief valve
Discharge manifold with externally accessible integrated check valve
Flexible connector with clamps for schedule 40 pipe, discharge
Acoustic Enclosure - Indoor/Outdoor

Instruments
Pressure gauge c/w isolation ball valve (3x)
Dirty filter indicator (3x)

Optional Accessories
Inlet flexible sleeve - DN 200 (8")
Unloading Valve - G5
Motor Protection - 1 Thermistor/Ph

Optional Instruments
Hood Space Heater (2x)

Optional Spare Parts
1 Year Maintenance Kit (1 x V-Belt Set, 1 x Intake Filter)
2 Year Maintenance Kit (1 x V-Belt Set, 1 x Oil Change (Delta Lube), 2 x Air Filter)

Connection Points:
Intake Connection: Local
Discharge Connection: DN 200 - 8"

Exclusions: See page 2

Aerzen Canada
980 rue Valois, Vaudreuil-Dorion, Québec J7V 8P2

Customer Reference: 360077 - Orange Town of NY, USA
Aerzen Reference: SQ-22-259014b

PERFORMANCE DATA

Aerzen Blower Package - GM 50L DN 200 - Pressure

Configuration: **G5**

		Capacity	Min F	Sheaved down to	
Conditions:	**Scfm**	**1488**	**263**	**1368**	**1368**
Flow at inlet conditions	m³/min	44.09	7.8	40.52	40.52
	Icfm	**1557**	**275**	**1431**	**1431**
Inlet pressure (abs.)	bar	1.012	1.012	1.012	1.012
	Psi	14.68	14.68	14.68	14.68
Pressure differential	mbar(g)	379	379	379	321
	Psig	**5.5**	**5.5**	**5.5**	**4.65**
Inlet temperature	°C	29.44	29.44	29.44	29.44
Discharge temperature	°C	65	80	66	60
Blower speed	RPM	3023	756	2801	2779
Blower maximum speed	RPM	3800	3800	3800	3800
% of maximum blower speed		80%	20%	74%	73%
Power required at shaft (with accessories) **	kW	36.0	8.2	32.7	28.1
	HP	48.3	11.0	43.9	37.7
Total Power (Wire to Air):	HP	53.5	12.2	48.6	41.7
Motor rating	**HP**	**60.0**			
Motor speed	RPM	1775	444	1645	1632
Motor frequency	Hz	60	15	56	55

Noise level without acoustic hood	dB(A)	97
Noise level with acoustic hood	dB(A)	70

Tolerances as per EN 10204, in accordance with standard ISO 1217:
Flow at inlet conditions / Power required at shaft +/- 5%

Blower package noise level:
Free field measurement at 1m from the complete blower package (tolerance +/- 2 dB(A))

Tests and measurements:
Blower stage: 1.5 hour flow test at the factory (Germany) on a calibrated test bed, at maximum operating conditions and according to DIN 1945. acceptance tolerance: +/- 5%.
A complete test report is available upon request.

On Site Commissioning
Available upon request, charges to be advised.
- Any commissioning activity is subject to two weeks prior notice and completion of commissioning checklist.
- Any on-site activity outside the time indicated will be billed according to the Aerzen Standard Rate Sheet

Exclusions
Control Panels, Motor Starters, Piping and Electrical Connections
* Unloading valves are required for reduced voltage starters

Warranty
Blowers including accessories are warranted for a period of 12mo / max 18mo after delivery and after provisional acceptance of the work against defects in workmanship and design. This warranty does not cover wearing parts unless such parts are defective during shipping / commissioning.
As per Aerzen standard warranty terms.

** Power at shaft excludes drive motor and belt drive

NOTICE: THIS DRAWING AND ALL INFORMATION HEREIN IS THE PROPERTY OF AERZEN CANADA INC AND ITS SUBSIDIARIES AND SHALL NOT BE REPRODUCED BY ANY MEANS IN WHOLE OR IN PART OR USED AS THE BASIS FOR MANUFACTURE WITHOUT WRITTEN PERMISSION

CAUTION

BLOWER PACKAGES MUST BE CAREFULLY LEVELED. USE OIL LEVEL ON SIGHT GLASSES OF THE BLOWER STAGE. USE PROVIDED SHIMS TO ADJUST LEVEL IF NECESSARY. PLEASE REFER TO THE OPERATING AND INSTALLATION INSTRUCTIONS MANUAL (DOCUMENT # G4-006) FOR MORE DETAILS.

for straddling dowels A/B 15/15 - Liebig - dowel
(not included in Aerzen's scope of supply)

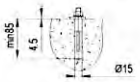

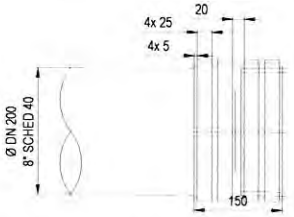

DISCHARGE CONNECTION DETAILS

NOTE	QTY	POS	DESCRIPTION
	1	1	BLOWER - GM 50L - 360 KG
D	1	2	MOTOR 400 FRAME REPRESENTED
	1	3	BASE FRAME / DISCHARGE SILENCER
	1	4	CONNECTION HOUSING WITH CHECK VALVE - DN 200
	4	5	SET OF 4 VIBRATION ISOLATORS
	1	6	DISCHARGE FLEXIBLE SLEEVE - DN 200 / 8" SCHED 40
	1	7	PRESSURE RELIEF VALVE - DN 125 - SET TO 750 mbar
	1	8	INLET FILTER / SILENCER ASSEMBLY - DN 200
	1	9	INLET FILTER ELEMENT
E	1	10	BELT GUARD
	1	11	DRIVER SHEAVE
E	1	12	DRIVER BUSHING
	1	13	DRIVEN SHEAVE
E	1	14	DRIVEN BUSHING
	1	15	V-BELT SET
	1	16	FILTER MAINTENANCE INDICATOR - WIKA
	1	17	DISCHARGE PRESSURE GAUGE WITH BALL VALVE - WIKA
	1	18	ACOUSTIC ENCLOSURE - G5 - INDOOR INSTALLATION
	1	19	MECHANICAL FAN - MOUNTED ON THE BLOWER SHAFT - GM 50L
G	1	20	INLET FLEXIBLE EPDM SLEEVE - DN 200 / 8" SCHED 40
G	1	21	UNLOADING VALVE

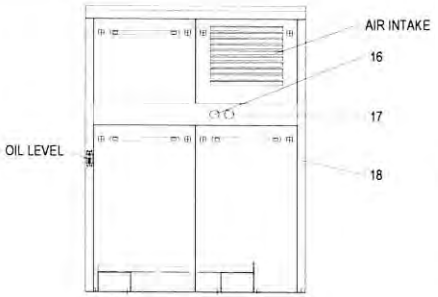

VIEW 'A-A' FRONT OF PACKAGE

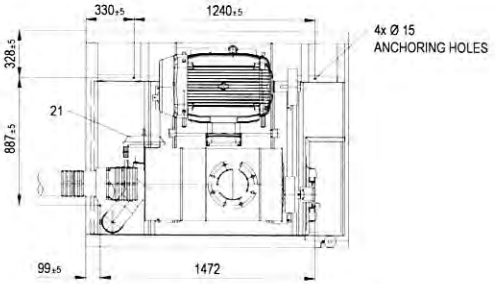

NOTES:

A. ASSEMBLY WEIGHT WITHOUT MOTOR: 1460 KG
B. PAINT: PACKAGE - AERZEN STANDARD BLUE
C. 1M CLEARANCE IS RECOMMENDED AT THE FRONT OF THE PACKAGE FOR MAINTENANCE ACCESS
D. MOTOR: 400 FRAME REPRESENTED, OTHER SIZE AVAILABLE
E. INCLUDED BUT NOT SHOWN ON DRAWING
F. FOR VARIABLE SPEED APPLICATIONS, CONSTANT TORQUE VFD ARE REQUIRED
G. OPTIONAL

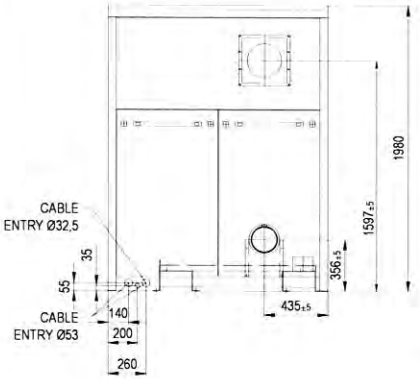

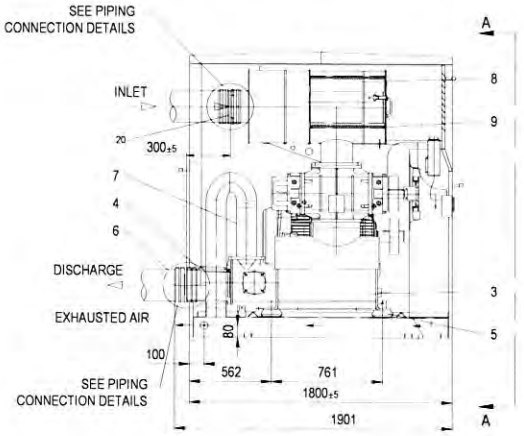

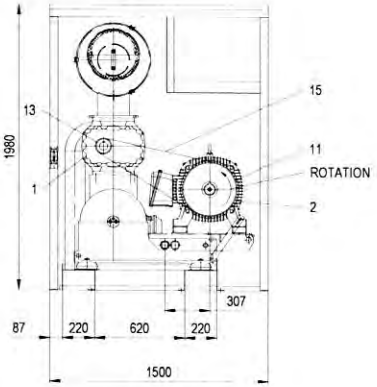

REVISION DETAILS

REV	DESCRIPTION	DATE	REVIEWED	DATE	DETAILS	MADE
A		23/07/14				

AERZEN

AERZEN CANADA INC

THIRD ANGLE PROJECTION

GEN 5 - GM 50L
PRESSURE

DWG NO ZG-00771S

DRAWN BY | REVIEWED BY

DATE 23 JULY 2014 | REV A

SCALE: NONE | SIZE: B | SHEET 1 OF 1

Aerzener Maschinenfabrik GmbH
Reherweg 28 - D-31855 Aerzen - Telefon (0 51 54) 81 0 - info@aerzener.de - www.aerzener.com

4000323947 | ZTD | 01

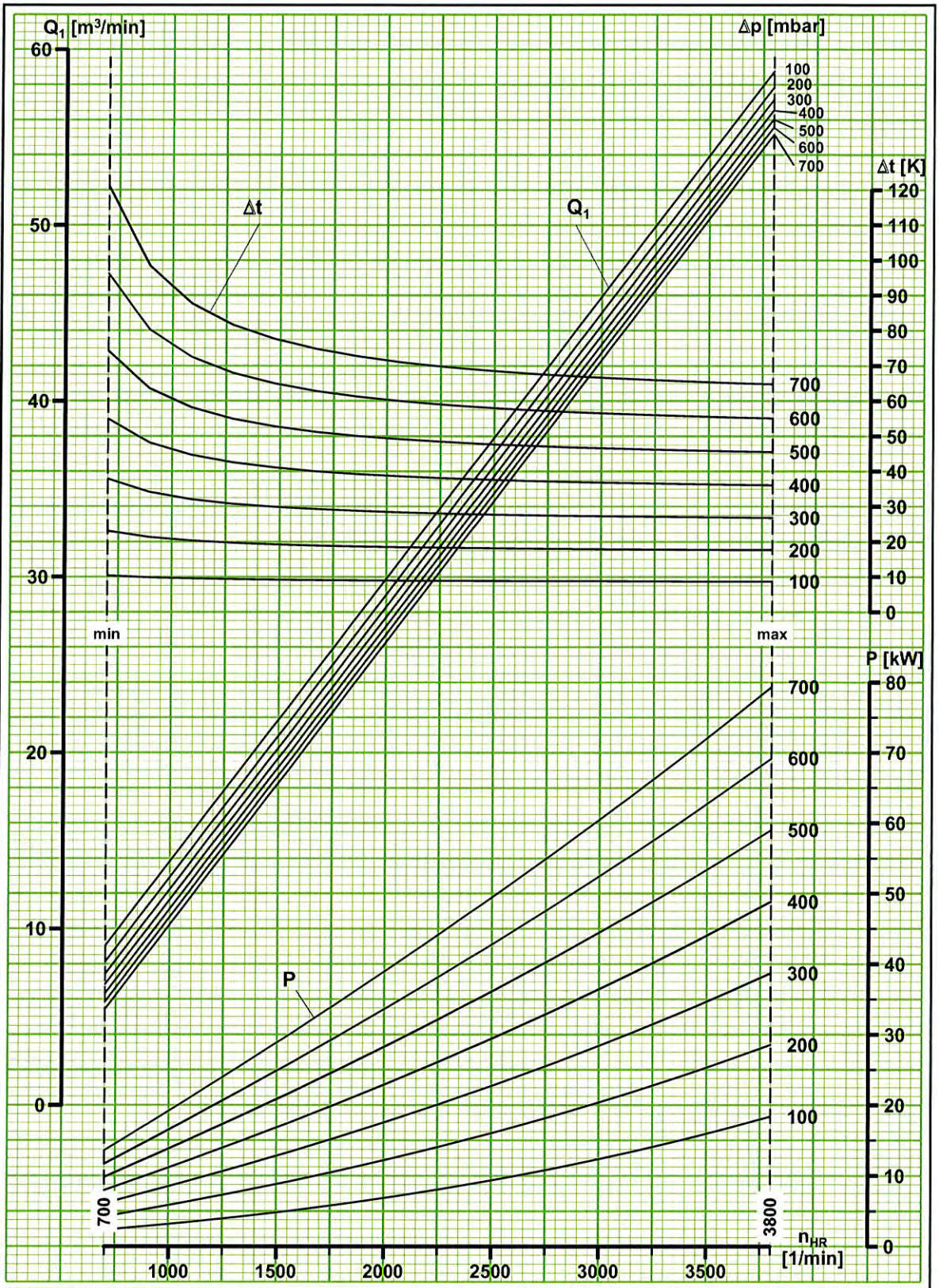

Q_1 : Ansaugvolumenstrom (Luft) bei p_1 = 1,0 bar und t_1 = 20°C	intake volume flow (air) at p_1 = 1.0 bar and t_1 = 20°C	débit aspiré (air) pour p_1 = 1,0 bar et t_1 = 20°C
n_{HR} : Hauptrotordrehzahl	main rotor speed	vitesse du rotor principal
n_V : Antriebswellendrehzahl	drive shaft speed	vitesse de l'arbre d'entraînement
P : Leistungsbedarf an der Kupplung	power required at the coupling	puissance absorbée à l'accouplement
t : Temperaturerhöhung	temperature rise	élévation de température
p : Druckerhöhung	pressure difference	pression différentielle

Leistungsdiagramm - Überdruck - für Drehkolbengebläsestufe
performance diagram - overpressure - for stage of rotary piston blower
courbes de fonctionnement - fonctionnement en pression - pour étage de surpresseur à pistons rotatifs

GM 50 L

nV / nHR = 1	04/2016 TRD / Hallemann	G2-418 - XL SAP 4000323947 - 01

Aerzen Canada
980 rue Valois, Vaudreuil-Dorion, Québec J7V 8P2

Customer Reference: 360077 - Orange Town of NY, USA
Aerzen Reference: SQ-22-259014b

Submitted by: Nikita Assilamehoo
nikita.assilamehoo@aerzen.com

SCOPE OF SUPPLY

Process blowers

3 Aerzen Generation 5 Blower Package - GM 90S DN 250 - Pressure - including:

Aerzen GM 90S Blower
Drive Motor - Teco: 125hp, 1800rpm, TEFC, 460V/60Hz

Base with integrated reactive type discharge silencer
Intake filter silencer
Hinged motor support as automatic belt tensioning device
Set of vibration isolation mounts
Narrow v-belt drive with guard - 1 set
Spring loaded relief valve
Discharge manifold with externally accessible integrated check valve
Flexible connector with clamps for schedule 40 pipe, discharge
Acoustic Enclosure - Indoor/Outdoor

Instruments
Pressure gauge c/w isolation ball valve (3x)
Dirty filter indicator (3x)

Optional Accessories
Inlet flexible sleeve - DN 250 (10")
Motor Protection - 1 Thermistor/Ph

Optional Instruments
Temperature switch c/w thermowell 120V (3x)
Pressure switch 120V (3x)
Hood Space Heater (2x)

Optional Spare Parts
1 Year Maintenance Kit (1 x V-Belt Set, 1 x Intake Filter)
2 Year Maintenance Kit (1 x V-Belt Set, 1 x Oil Change (Delta Lube), 2 x Air Filter)

Connection Points:
Intake Connection: Local
Discharge Connection: DN 250 - 10"

Exclusions: See page 2

Aerzen Canada
980 rue Valois, Vaudreuil-Dorion, Québec J7V 8P2

Customer Reference: 360077 - Orange Town of NY, USA
Aerzen Reference: SQ-22-259014b

PERFORMANCE DATA

Aerzen Blower Package - GM 90S DN 250 - Pressure

Configuration: **G5**

		Capacity	Min F		
Conditions:	**Scfm**	**1950**	**273**	**1950**	
Flow at inlet conditions	m³/min	57.76	8.09	57.76	
	Icfm	**2040**	**286**	**2040**	
Inlet pressure (abs.)	bar	1.012	1.012	1.012	
	Psi	14.68	14.68	14.68	
Pressure differential	mbar(g)	621	621	593	
	Psig	**9.0**	**9.0**	**8.6**	
Inlet temperature	°C	29.44	29.44	29.44	
Discharge temperature	°C	92	148	89	
Blower speed	RPM	1635	436	1630	
Blower maximum speed	RPM	2400	2400	2400	
% of maximum blower speed		68%	18%	68%	
Power required at shaft (with accessories) **	kW	74.5	19.9	71.1	
	HP	99.9	26.7	95.3	
Total Power (Wire to Air):	HP	110.6	29.5	105.6	
Motor rating	**HP**	**125.0**			
Motor speed	RPM	1780	475	1774	
Motor frequency	Hz	60	16	60	

Noise level without acoustic hood	dB(A)	101
Noise level with acoustic hood	dB(A)	79

Tolerances as per EN 10204, in accordance with standard ISO 1217:
Flow at inlet conditions / Power required at shaft +/- 5%

Blower package noise level:
Free field measurement at 1m from the complete blower package (tolerance +/- 2 dB(A))

Tests and measurements:
Blower stage: 1.5 hour flow test at the factory (Germany) on a calibrated test bed, at maximum operating conditions and according to DIN 1945. acceptance tolerance: +/- 5%.
A complete test report is available upon request.

On Site Commissioning
Available upon request, charges to be advised.
- Any commissioning activity is subject to two weeks prior notice and completion of commissioning checklist.
- Any on-site activity outside the time indicated will be billed according to the Aerzen Standard Rate Sheet

Exclusions
Control Panels, Motor Starters, Piping and Electrical Connections
* Unloading valves are required for reduced voltage starters

Warranty
Blowers including accessories are warranted for a period of 12mo / max 18mo after delivery and after provisional acceptance of the work against defects in workmanship and design. This warranty does not cover wearing parts unless such parts are defective during shipping / commissioning.
As per Aerzen standard warranty terms.

** Power at shaft excludes drive motor and belt drive

NOTICE: THIS DRAWING AND ALL INFORMATION HEREIN IS THE PROPERTY OF AERZEN CANADA AND ITS SUBSIDIARIES AND SHALL NOT BE REPRODUCED BY ANY MEANS IN WHOLE OR IN PART OR USED AS THE BASIS FOR MANUFACTURE WITHOUT WRITTEN PERMISSION

CAUTION
BLOWER PACKAGES MUST BE CAREFULLY LEVELED. USE OIL LEVEL ON SIGHT GLASSES OF THE BLOWER STAGE. USE SHIMS TO ADJUST LEVEL IF NECESSARY. PLEASE REFER TO THE OPERATING AND INSTALLATION INSTRUCTIONS MANUAL (DOCUMENT # G4-006) FOR MORE DETAILS

NOTE	QTY	POS	DESCRIPTION
	1	1	BLOWER - GM 90S - 690 KG
D	1	2	ELECTRIC MOTOR - TECO WESTINGHOUSE REPRESENTED
	1	3	BASEFRAME / DISCHARGE SILENCER - DN 250
	1	4	CONNECTION HOUSING WITH CHECK VALVE - DN 250
	1	5	SET OF 4 VIBRATION ISOLATORS - DN 250
	1	6	DISCHARGE FLEXIBLE SLEEVE - WITH 4 CLAMPS - DN 250
	1	7	PRESSURE RELIEF VALVE - DN 150 - SET TO 1050 mbar
	1	8	INLET FILTER / SILENCER - DN 250
	1	9	INLET FILTER ELEMENT - DN 250
E	1	10	BELT GUARD - DN 250
	1	11	DRIVER SHEAVE
E	1	12	DRIVER BUSHING
	1	13	DRIVEN SHEAVE
E	1	14	DRIVEN BUSHING
	1	15	V-BELT SET
	1	16	FILTER MAINTENANCE INDICATOR - WIKA
	1	17	DISCHARGE PRESSURE GAUGE WITH BALL VALVE - WIKA
	1	18	ACOUSTIC ENCLOSURE - DN 250
	1	19	FAN - MOUNTED ON BLOWER SHAFT - DN 250
E	1	20	FAN ADAPTOR - GM 90S
G		21	INLET FLEXIBLE SLEEVE - WITH 4 CLAMPS - DN 250
		22	UNLOADING VALVE - AEROMAT
	1	23	MOTOR EXTENSION BOX 8" - 022-MBOX00008

FOR STRADDLING DOWELS AIR 15/15 - LIEBIG DOWEL (NOT INCLUDED IN AERZEN'S SCOPE OF SUPPLY)

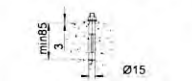

ANCHORING DETAILS

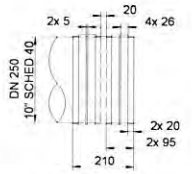

CONNECTION DETAILS

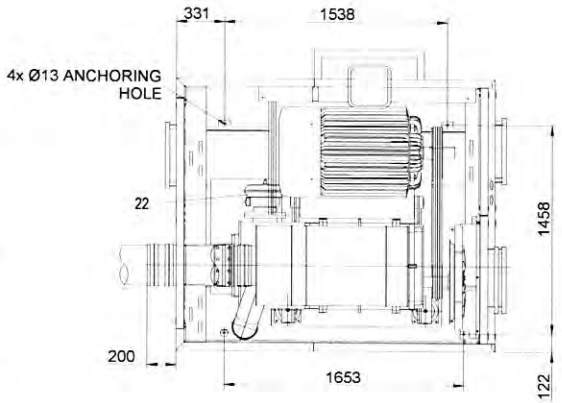

NOTES:
A. UNIT ASSEMBLY WEIGHT: 2238+ *MOTOR KG*
B. PAINT: PACKAGE - AERZEN STANDARD BLUE
C. 1M CLEARANCE IS RECOMMENDED AT THE FRONT & REAR OF THE PACKAGE FOR MAINTENANCE ACCESS
D. MOTOR: TECO WESTINGHOUSE REPRESENTED
E. INCLUDED BUT NOT SHOWN ON DRAWING
F. FOR VARIABLE SPEED APPLICATIONS, CONSTANT TORQUE VFD ARE REQUIRED
G. OPTIONAL

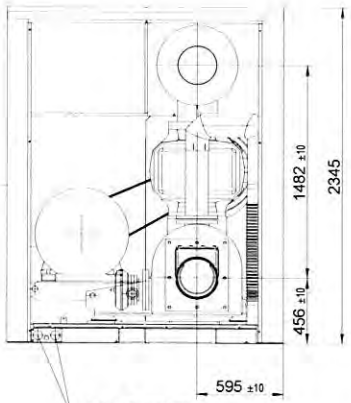

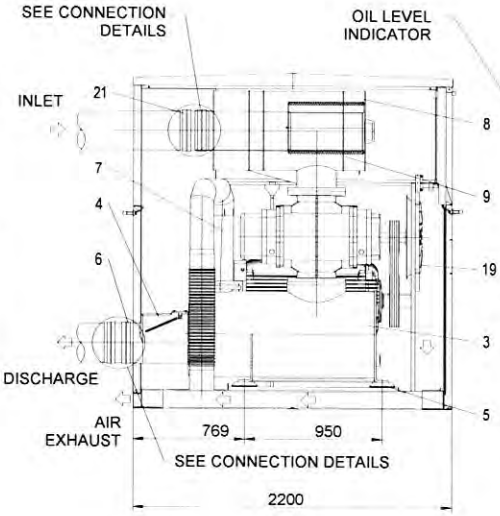

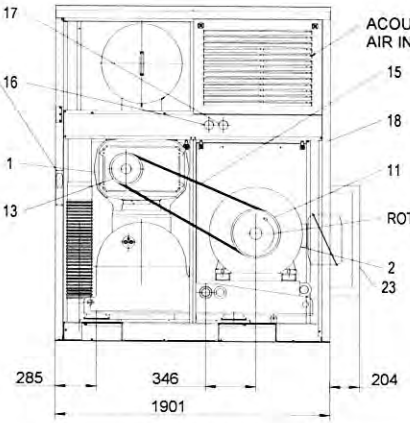

ENGINEER STAMP

REVISION DETAILS

REV	DRAWN BY	DATE	REVIEWED	DATE	DETAILS	APP'D
A					INITIAL RELEASE	

AERZEN

AERZEN CANADA

THIRD ANGLE PROJECTION

GEN 5 - GM 90S
DN 250 - PRESSURE

DWG NO ZG-01515

DRAWN BY | REVIEWED BY

DATE JULY 21, 2020 | REV A

SCALE NONE | SIZE B | SHEET 1 OF 1

Aerzener Maschinenfabrik GmbH
Reherweg 28 - D-31855 Aerzen - Telefon (0 51 54) 81 0 - info@aerzener.de - www.aerzener.com

4000323950 | ZTD | 00

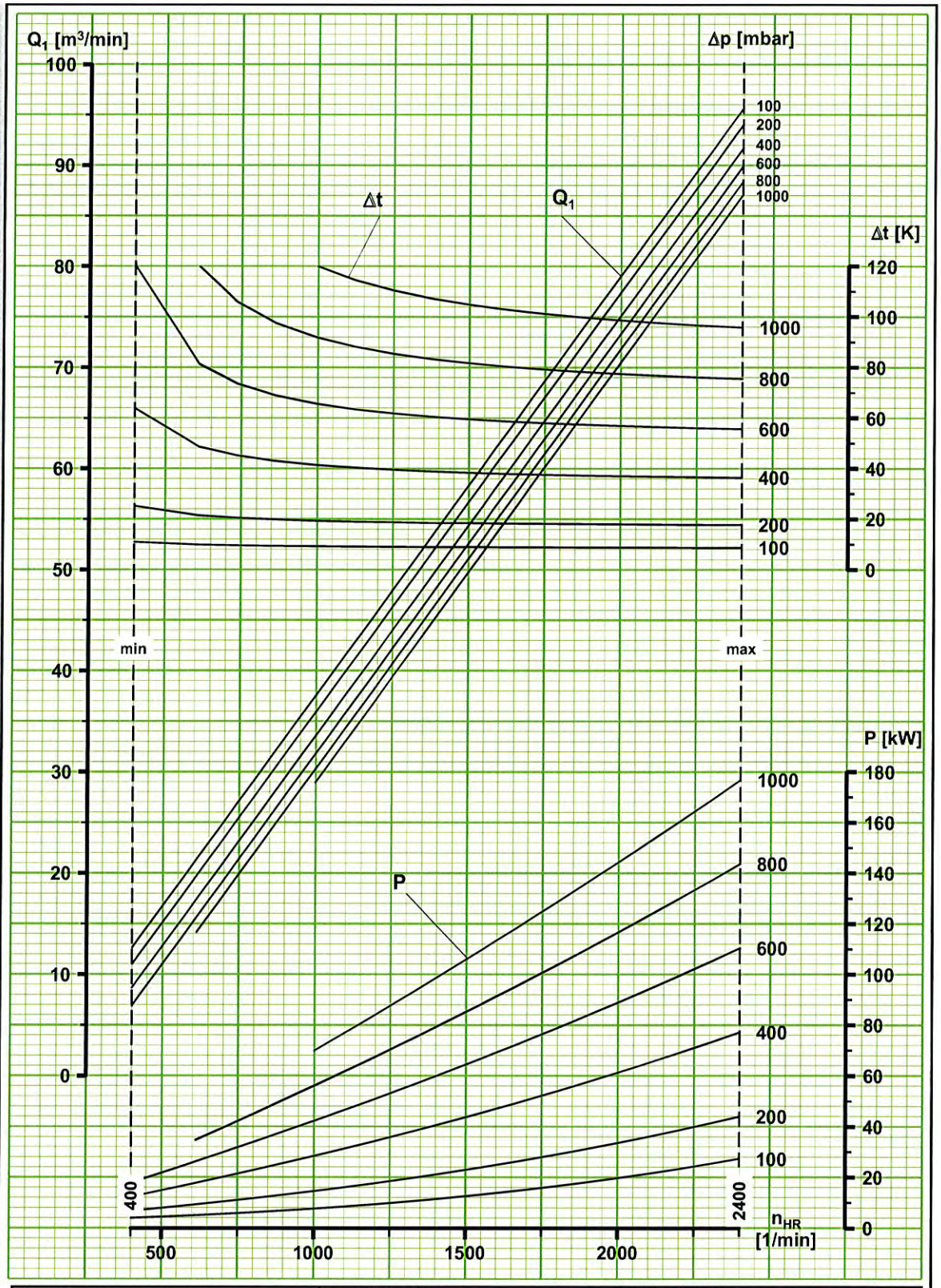

Q_1 : Ansaugvolumenstrom (Luft) bei p_1 = 1,0 bar und t_1 = 20°C	intake volume flow (air) at p_1 = 1.0 bar and t_1 = 20°C	débit aspiré (air) pour p_1 = 1,0 bar et t_1 = 20°C
n_{HR} : Hauptrotordrehzahl	main rotor speed	vitesse du rotor principal
n_V : Antriebswellendrehzahl	drive shaft speed	vitesse de l'arbre d'entraînement
P : Leistungsbedarf an der Kupplung	power required at the coupling	puissance absorbée à l'accouplement
t : Temperaturerhöhung	temperature rise	élévation de température
p : Druckerhöhung	pressure difference	pression différentielle

Leistungsdiagramm - Überdruck - für Drehkolbengebläsestufe
performance diagram - overpressure - for stage of rotary piston blower
courbes de fonctionnement - fonctionnement en pression - pour étage de surpresseur à pistons rotatifs

GM 90 S

nV / nHR = 1	04/2016 TRD / Hallemann	G2-424 - XL SAP 4000323950 - 00

Submersible Mixer Type ABS RW

RW 650 | 25.6" Propeller, Direct Drive, 12 Pole, 3-Phase, 60 Hz

Submersible Motor Specifications		
Motor Design		NEMA design B, squirrel cage induction
Motor Type		Fully enclosed submersible, IP68 protection rating
Motor Efficiency Standard and Rating		IEC 60034-30
Motor Efficiency Test Protocol		IEC 60034-2-1
Insulation Material	**STD**	Class F, 155°C (311°F), copper windings
	OPT	Class H, 180°C (356°F), copper windings [3,4]
Motor Filling Medium		Air
Temperature Rise		Class B
Maximum Fluid Temperature		40°C (104°F) continuous
Motor Protection	**Thermal**	Normally closed bimetallic switch in each phase, connected in series, 140°C (284°F) +/- 5°C (41°F) opening temperature [4]
	Leakage	Moisture detection probe in seal sensing chamber, motor housing, and junction chamber (for use with appropriate relay)
Seal Sensing Chamber Filling Medium		Non-toxic, white mineral oil
Bearings	**Inner**	1 x Single row deep groove ball bearing, permanently lubricated, preloaded
	Outer	1 x Single row deep groove ball bearing, permanently lubricated
	L_{10} Life	>100,000 hours
Motor Starter Types		Suitable for use with direct-on-line (DOL), electronic soft starters, and PWM type Variable Frequency Drives [1]
Maximum Starts per Hour		10 evenly spaced w/ DOL and soft starters; N/A with PWM type VFDs
Inverter Duty Rating		Motors meet NEMA MG1, part 31 requirements
Maximum Submergence		20 meters (65 feet)
Available Voltages		208, 230, 460, 575
Voltage Tolerance from Rated		+/-10%
Agency Approvals	**STD**	CSA
	OPT	Factory Mutual (FM)
Explosion Proof Rating	**OPT**	NEC 500 Class 1, Division 1, Group C & D, Class T3C max surface temp

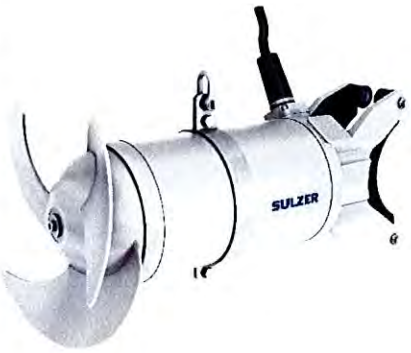

The picture above may differ from the actual product.
For illustrative purposes only.

[1] Output filters may be required on VFDs. See document **DS-E00-001** for details.
[3] Not applicable with optional FM version.
[4] Thermals are set to 160°C (320°C) when configured with the optional Class H insulation (for standard, non-explosion-proof version only).

Motor Ratings

Motor Model	Input Power (P1)	Rated Power Output (P2)	Nominal RPM	Rated Voltage	Full Load Amps	Locked Rotor Amps	NEMA Code Letter	NEMA Service Factor	Motor Efficiency at % Load			Power Factor at % Load		
									100	75	50	100	75	50
A 60/12	8.0 kW	6.0 kW 8.1 HP	580	208 230 460 575	38.7 35.0 17.5 14.0	110 100 50 40	E	1.0	76.5	73.0	76.6	.735	.651	.515
A 90/12	11.6 kW	9.0 kW 12.1 HP	580	208 230 460 575	53.0 48.0 24.0 19.2	115 104 52 42	B	1.0	77.6	77.8	74.7	.607	.519	.399
A 120/12	15.3 kW	12.0 kW 16.1 HP	580	208 230 460 575	69.5 62.8 31.4 25.1	194 175 88 70	D	1.0	78.3	78.0	75.2	.612	.531	.414

DS-M06-031 REV: 1 DATE: 10/21 | © Sulzer | Specifications Subject to Change Without Notice

Submersible Mixer Type ABS RW

RW 650 | 25.6" Propeller, Direct Drive, 12 Pole, 3-Phase, 60 Hz

Cable Data

	Motor	Motor Voltage	Cable Qty	Cable Type	Cable Nominal Outside Diameter +/- .5mm (.02")	
					Power	Ground
Power Cable	A 60/12	208	1	SOOW 8/4+16/3	24.4mm (0.96")	Integrated w/ Power
		230	1	SOOW 8/4+16/3	24.4mm (0.96")	Integrated w/ Power
		460	1	SOOW 10/7	20.7mm (0.82")	Integrated w/ Power
		575	1	SOOW 10/7	20.7mm (0.82")	Integrated w/ Power
	A 90/12	208	1	G-GC 6-3	26.7mm (1.05")	Integrated w/ Power
		230	1	G-GC 6-3	26.7mm (1.05")	Integrated w/ Power
		460	1	SOOW 8/4+16/3	24.4mm (0.96")	Integrated w/ Power
		575	1	SOOW 10/7	20.7mm (0.82")	Integrated w/ Power
	A 120/12	208	1	G-GC 6-3	26.7mm (1.05")	Integrated w/ Power
		230	1	G-GC 6-3	26.7mm (1.05")	Integrated w/ Power
		460	1	SOOW 8/4+16/3	24.4mm (0.96")	Integrated w/ Power
		575	1	SOOW 8/4+16/3	24.4mm (0.96")	Integrated w/ Power

	Motor Monitoring Type [5]	Cable Qty	Cable Type	Cable Nominal Outside Diameter +/- .5mm (.02")
Control Cable	Std monitoring w/ SOOW Power Cable	N/A	Integrated w/ Power	Integrated w/ Power
	Std monitoring w/ G-GC Power Cable	1	SOOW 16/4	10.6mm (0.42")
Cable Length	Standard: 10m (32 feet)	Optional: 15m (49 feet), 20m (65 feet), 30m (98 feet), Consult Factory for longer lengths		

[5] See motor protection on page 1.

Hydraulic Data

Type	Propeller, backswept design, 2 or 3-vane, w/ Seal Protection System													
Model	w/o Flow Ring							w/ Flow Ring						
	6521	6522	6531	6532	6533	6534	6535	6541	6542	6551	6552	6553	6554	6555
Propeller Diameter, mm (in.)	650 (25.6)	650 (25.6)	650 (25.6)	650 (25.6)	650 (25.6)	650 (25.6)	650 (25.6)	650 (25.6)	650 (25.6)	650 (25.6)	650 (25.6)	650 (25.6)	650 (25.6)	650 (25.6)
Propeller Nominal Speed, RPM	580	580	580	580	580	580	580	580	580	580	580	580	580	580
Propeller Vane Quantity	2	2	3	3	3	3	3	2	2	3	3	3	3	3
Propeller Pitch, degrees	10.8	12.8	10.8	12.8	13.5	15	19	10.8	12.8	10.8	12.8	13.5	15.0	19.0
Capacity, m^3/s (GPM) [6]	0.49 (7,800)	0.52 (8,300)	0.72 (11,500)	0.77 (12,200)	0.79 (12,500)	0.85 (13,500)	0.92 (14,600)	0.48 (7,600)	0.51 (8,000)	0.70 (11,100)	0.75 (11,800)	0.77 (12,100)	0.82 (13,100)	0.90 (14,200)
Power, Pp, kW (HP) [7]	2.8 (2.1)	3.4 (2.5)	6.7 (5.0)	8.6 (6.4)	10.7 (8.0)	12.1 (9.0)	15.4 (11.5)	3.6 (2.7)	4.4 (3.3)	5.5 (4.1)	6.7 5.0)	7.4 (5.5)	12.1 (9.0)	11.5 (8.6)

[6] Flow rate in clean water at 20°C (68°F). [7] Power in clean water at 20°C (68°F).

Materials of Construction

	EC (Standard Construction)	CR (Stainless Steel Construction)
Power Cable	Chlorinated Polyethylene (CPE)	
Lifting Band	Stainless Steel 1.4401 (ASTM A276, Type 316)	
Lifting Shackle	Stainless Steel 1.4571 (ASTM A276, Type 316Ti)	
Guide Bracket Liner	Nylon (PA)	
Guide Bracket Rollers	Acetal (POM)	
Guide Bracket / Cable Connection Chamber	Cast Iron EN-GJL-250 (ASTM A48, Class 35B)	Stainless Steel 1.4408 (ASTM A743, Grade CF8M)
Motor Housing	Cast Iron EN-GJL-250 (ASTM A48, Class 35B)	Stainless Steel 1.4571 (ASTM A276, Type 316Ti)
Seal Housing	Cast Iron EN-GJL-250 (ASTM A48, Class 35B)	Stainless Steel 1.4408 (ASTM A743, Grade CF8M)
Motor Shaft	Stainless Steel 1.4021 (ASTM A276, Type 420)	Stainless Steel 1.4404 (ASTM A276, Type 316L)
Propeller Shaft	Integrated with Motor Shaft	
Propeller	Stainless Steel 1.4571 (ASTM A276, Type 316Ti)	
Flow Ring [8]	Stainless Steel 1.4571 (ASTM A276, Type 316Ti)	
Seal Protection System	Stainless Steel 1.4581 (ASTM A351, Grade CF8M)	
Solids Deflection Ring	Nitrile Rubber (NBR / Buna-N) *Optional: Fluorocarbon Rubber (FKM / Viton®)*	
External Hardware	Stainless Steel 1.4401 (ASTM A276, Type 316)	
O-Rings and Cable Glands	Nitrile Rubber (NBR / Buna-N) *Optional: Fluorocarbon Rubber (FKM / Viton®)*	
Mechanical Seals – Outer	Silicon Carbide / Silicon Carbide, Nitrile, 316 SS *Optional: Silicon Carbide / Silicon Carbide, Viton®, 316 SS*	
Mechanical Seals – Inner	Carbon / Chrome Steel, Nitrile, 316 SS	
Outer Bearing Lip Seal	Nitrile Rubber (NBR / Buna-N)	
Coating/Protection	Two-part epoxy, blue, 120µm (4.7 mil) DFT *Optional: Two-part epoxy, blue, 400 µm (15.7 mil)*	N/A

[8] Only applicable to "w/ Flow Ring" models.

DS-M06-031 REV: 1 DATE: 10/21 | © Sulzer | Specifications Subject to Change Without Notice

Submersible Mixer Type ABS RW

RW 650 | 25.6" Propeller, Direct Drive, 12 Pole, 3-Phase, 60 Hz

General Data (Standard Materials of Construction & Cable Length)

	w/o Flow Ring			w/ Flow Ring		
	A 60/12	A 90/12	A 120/12	A 60/12	A 90/12	A 120/12
≈ Mixer Weight, kg (lbs)	155 (342)	182 (401)	214 (472)	173 (381)	200 (441)	232 (512)
Guide Bracket Mast Size	4" square					

DS-M06-031 REV: 1 DATE: 10/21 | © Sulzer | Specifications Subject to Change Without Notice

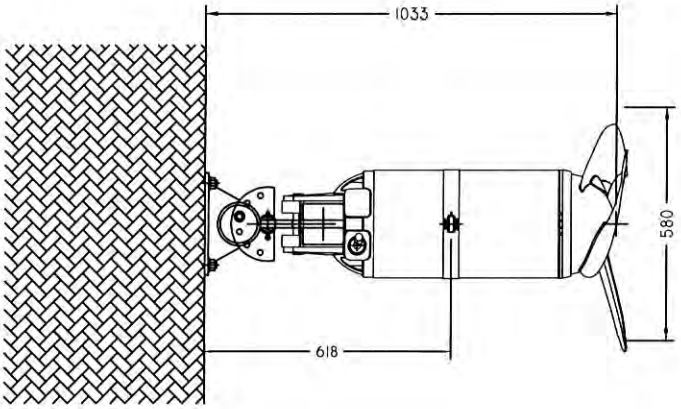

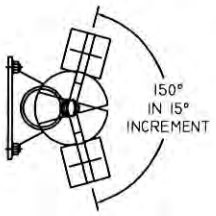

MAST ROTATION

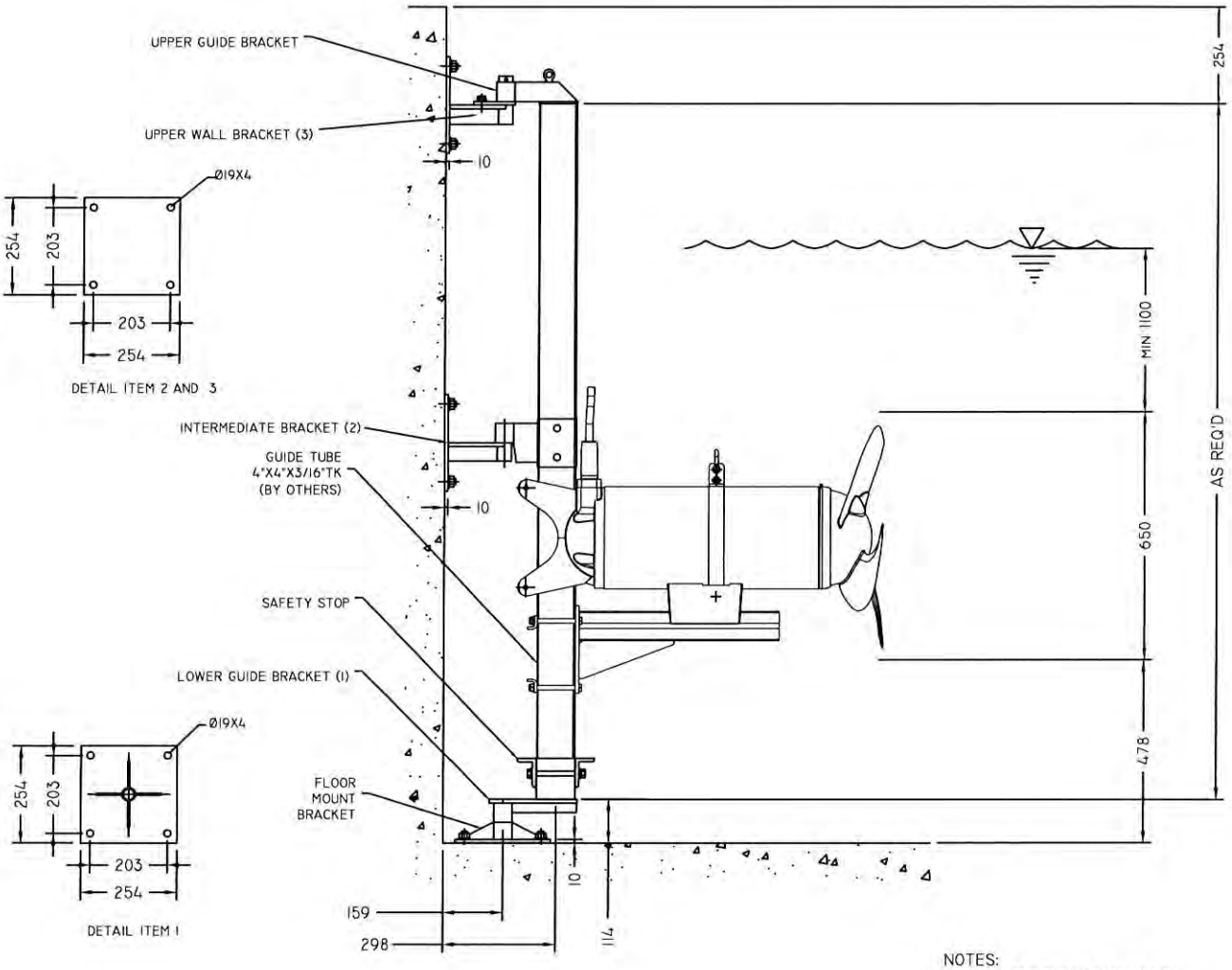

NOTES:
I. ANCHOR BOLTS BY OTHERS
II. GUIDE TUBE BY OTHERS
III.LIFTING ACCESSORIES BY OTHERS

WEIGHT 209KG

SULZER

DESCRIPTION:
INSTALLATION DRAWING
RW6521-A60/12 W/O FR W/O VR
4" SQ GUIDE RAIL /W INTER BRKT,304SS

DRAWN BY:	CC
DATE:	MAY 30,2022
REV:	0
DWG NO.	CA000583

SSI PROPOSAL

SSI Aeration Inc.



Aeration Performance Through Innovation



Fine Bubble Diffusers
Disc Type

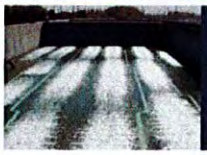

Fine Bubble Diffusers
Tube Type



Coarse Bubble Diffusers
Reliability Built In

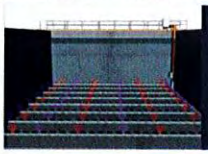

Telemetry Systems
Real Time Camera Monitoring



Advanced Membrane Materials
PTFE

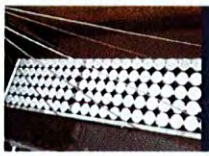

Retrievable Systems
Easy to Maintain



Complete Aeration Systems
Designed for You



OEM Replacement Membranes
Retrofit Existing Systems

SSI Aeration Inc.
4 Tucker Drive, Poughkeepsie,
NY 12603, United States America
Tel. +1 845-454-8171
Fax: +1 845-454-8094
Email: info@ssiaeration.com
www.ssiaeration.com

July 6, 2022.

File: RFP052822,NY (Suez)_P-060122[A]

SUEZ WATER TECHNOLOGIES

Attention: Fan, Fengshen (WTS)
E-Mail: fengshen.fan@suez.com
Phone: 905 469 7792

Ref: RFP052822, NY- **Proposal**
Revision 'A' with Tank Dimensions in lieu of email 07-06-2022

Sir/Madam,

In response to your email and based on the information, SSI as an ISO-9001 certified corporation is pleased to submit this proposal for the design, manufacture & supply of Aeration Equipment for **Three (3) Aerobic Tanks** with AFD270-E Fine Bubble Disc Diffusers with EPDM Membranes.

Unless otherwise noted equipment supplied will meet or exceed any engineer specified performance requirements and/or called in the RFP/Email.

Design calculations & Preliminary Drawings showing the general arrangement of diffuser/Piping layouts are included (Refer item I & II).

A. **Scope of supply** is complete with all components from the downstream of air supply line connection (±6" above water level) starting with SS Vanstone and loose follower flange including drop pipe *(Isolation valve and associated accessories are not included in SSI supply limit)*

B. **Each Tank** is 74.1' (L) X 24' (W) X 17.5' (SWD) and Aeration Equipment Supply *per Tank* is listed below:

Ø8" 304SS Drop pipe ±15'		Ø8" PVC Lower Drop + Manifold ±25'		Ø4" PVC Headers ±720' c/w factory drilled holes for mounting saddles and diffusers at site		**AFD270-E diffusers** c/w 4" QTS
304SS Supports	304SS Couplings	304SS Supports	PVC Couplings	304SS Supports	PVC Couplings	
2	1	4	1	150	40	**740**

C. Preliminary Drawings:

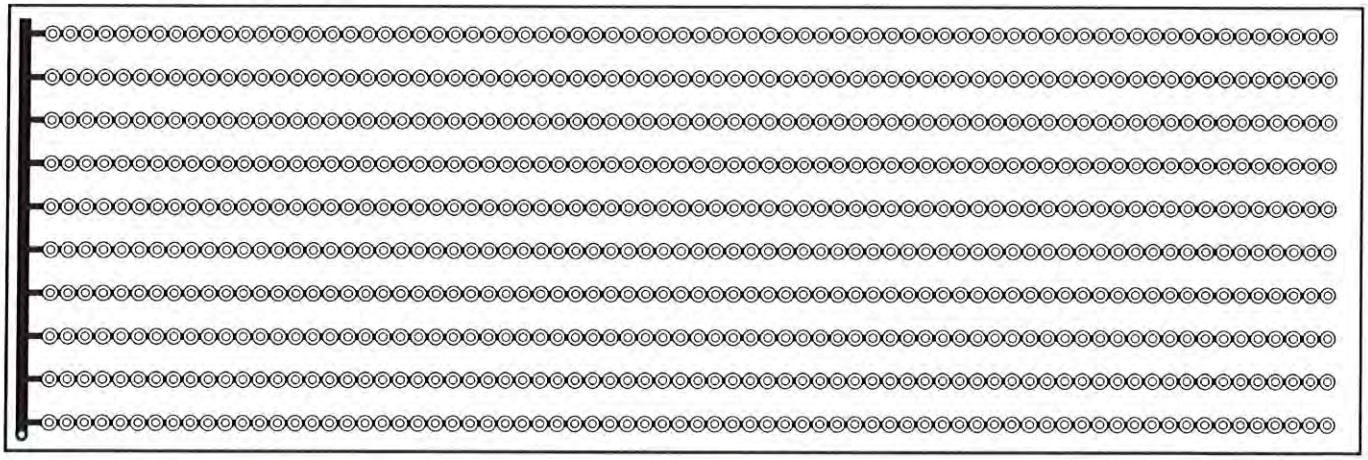

Note: This schematic layout is for conceptual purpose not for construction.

Aerobic Tank - 74' (L) X 24' (W) X 17'-6" (SWD)
ONE (1) SHOWN THREE (3) REQUIRED

Grid Details
10-HEADERS PER GRID @ 2'-4.16" C-C
74-DIFFUSERS PER HEADER @ 0'-11.53" C-C
740-DIFFUSERS PER GRID

I. Design calculations:

SSI Aeration Inc.
4 Tucker Drive
Poughkeepsie, N.Y. 12603
United States America.
Tel. +1 845-454-8171
Fax: +1 845-454-8094
Email: info@ssiaeration.com
www.ssiaeration.com

DIFFUSED AERATION SYSTEM

Doc #	**SD00010442**	Revision #	**2**
Project	**RFP052822**	Date	**7-6-2022**
Process Type	**AST**	Units	**Imperial**

Aerobic Tank design for 3 tank(s)

Tank Type	**Aeration**	Tank Shape	**Rectangular**
Type of Input	**AOR**	Diffuser Type	**AFD270-1mm**

	Units	**condition**
Design Scenario		**Standard**
AOR	(Lbs/day)	11,684
AOR	(lbs O_2/hr)	486.83
Site Elevation	(ft)	25
Aerobic Tank Length per tank	(ft)	74.1
Aerobic Tank Width per tank	(ft)	24
Diffuser Water Depth	(ft)	16.5
SOR	**(lbs O_2/hr)**	**1,308.12**
Total Airflow	**(SCFM)**	**3,429**
Airflow Per Diffuser	**(SCFM)**	**1.54**
Diffuser Quantity	**(pcs)**	**2,220**
Diffuser Density	**(%)**	**17.06**
SOTE	**(%/ft)**	**2.21**
Total SOTE	**(%)**	**36.55**
Blower Pressure	(PSIG)	8.44
Pressure @ Top Of Dropleg	(PSIG)	7.83

Aerobic Tank design for 3 tank(s)

	Units	condition
AOR	(Lbs/day)	11,684
AOR	(lbs O_2/hr)	486.83
MLSS	(mg/l)	8,500
Aeration Time	(hrs)	24
Liquid Temperature	(°C)	25
Ambient Air Temperature	(°C)	29.44
Site Elevation	(ft)	25
Barometric Pressure	(PSIG)	14.68
O_2 Uptake Rate	(mg/l/hr)	83.58
Minimum Diffuser Density	(%)	5
Alpha Factor	(α)	0.49
Fouling Factor	(F)	1
Beta Factor	(ß)	0.95
Theta Factor	(θ)	1.024
Dissolved Oxygen	(mg/l)	2
Aerobic Tank Length per tank	(ft)	74.1
Aerobic Tank Width per tank	(ft)	24
Side Water Depth	(ft)	17.5
Diffuser Water Depth	(ft)	16.5
Total Area of 3 tank(s).	(ft^2)	5,335.2
Tank Volume	(ft^3)	93,366
Tank Volume	(Million Gallons)	0.7
C *, Surface Saturation, Std., Meth	(mg/l)	8.26
Csw, Site Basin Saturation	(mg/l)	9.66
Css, Std., Basin Saturation	(mg/l)	10.64
SOR	(lbs O_2/hr)	1,308.13
SOR	(lbs O_2/day)	31,395.02
KLa20 - /hr		21.06
Required Mixing Energy	(SCFM/ft^2)	0.12
Airflow For Minimum Mixing	(SCFM)	640.22
Minimum Diffuser Quantity	(pcs)	651
SP O_2Transfer Rate	gr O_2/Nm^3-m	21.82
SAE	(lbs O_2/hp-h)	8.35
Blower Efficiency	(%)	70

Blower Power	(hp)	156.62
Estimated cost per kWh	(kWh)	0.11
Annual Operating Cost	(USD)	112,542.16

SSI 9" Disc Diffuser Systems

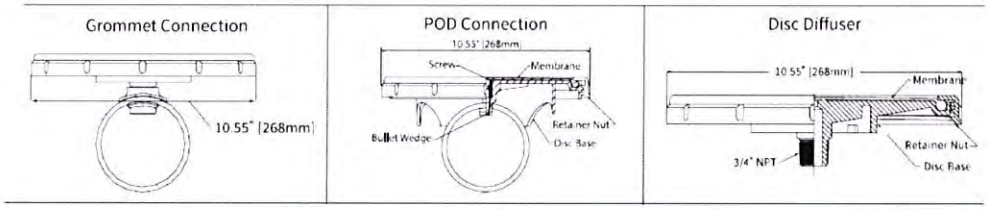



Limitation of Liability: The information contained in this Design is provided as a service exclusively to SSI clients and is intended to use with SSI products for Proposal/Quotation purpose only to be stamped or embossed with the SSI corporate seal for validation/approval. We accept no liability for the accuracy of self-generated designs.

Notes:

-

Thank you very much for your enquiry. This is a computer generated design.

SSI Aeration Inc. 4 Tucker Drive, Poughkeepsie, NY 12603 United States America.
Tel. +1 845-454-8171 Fax: +1 845-454-8094, Email: info@ssiaeration.com

SSI – SSI Aeration, Inc.
Standard Terms and Conditions of Sale

1. **General:** All products and services offered for sale by Stamford Scientific International, Inc. (hereinafter "Seller") or its subsidiaries or through its distributors or sales representatives are sold subject to the terms and conditions stated herein. This offer expressly limits acceptance to the terms hereof and any additional, different or inconsistent terms proposed by Buyer, whether in writing or otherwise, are hereby objected to and rejected and Seller shall not be bound thereby unless expressly agreed in a writing signed by an officer of the Seller that such terms and conditions shall supersede those contained herein.

2. **Estimates and Quotations**: All prices are subject to adjustment on account of specifications, quantities, shipment arrangements or other terms and conditions, which are not part of the original price quotation. Written estimates issued by the Seller will be valid for 30 days only. Products are sold at prices in effect at the time the order is taken. The company reserves the right to change prices without notice when necessary.

3. **Terms and Method of Payment**: For Buyers with established credit, payment of accounts due must be made within 30 days of shipment FOB Seller facility or 30 days after the goods are ready to ship and Buyer is notified of same. Seller may make partial billings of the contract price or invoice as various components of the equipment are shipped. Partial payments are expected to be made according to partial goods shipped. Custom built and special large orders shall require deposits in advance of production together with progress payments. For Buyers without credit, payment will be by company check, bank draft, Visa or Mastercard, telegraphic transfer or irrevocable letter of credit at time of order or progress payments according to quote offer. The Buyer shall not be entitled to withhold payment of any sums due to the Seller by reason of any disputed claim by the customer relating to any goods or deliveries. If Buyer fails to make payment by the due dates then without prejudice to any other rights of the Seller: The Seller shall be entitled to suspend all or any other deliveries to be made under that or any other contract with the Buyer and in such event the Buyer shall not in any respect be released from its obligations to the Seller under that or any such other contract. The Seller shall also be entitled to treat the relevant contract or any other contract with the Buyer as having been terminated by the Buyer and to claim damages for breach of contract accordingly.

4. **Taxes**: Product prices do not include taxes. The amount of any present or future sales, use, excise, value-added or similar tax if applicable to the sale shall be paid by the Buyer unless a tax exemption certificate acceptable to the tax authorities is approved. If Seller is required to pay any such tax, fee or charge, Buyer shall reimburse Seller therefore.

5. **Delays in Delivery and Force Majeure**: All quoted delivery dates are approximate. The Seller will make commercially reasonable efforts to meet any delivery date(s) quoted in the agreement. However, under no circumstances shall the Seller be liable to Buyer for any delay in shipment or failure to meet any quoted delivery date(s) due to unforeseen circumstances or due to a cause beyond its control. Examples of such causes are acts of God, wars, riots, embargoes, acts of civil or military authorities, fires, floods, accidents, strikes, transportation delays, inability to obtain materials or supplies, interruption for any reason in the manufacture of products by Seller's supplies or other causes not within Seller's control.

6. **Warranty/Repairs**: Products manufactured by Seller are warranted to be free from defects in materials or workmanship for 18 months from date of shipment or 12 months from the date of start up, whichever comes first. Parts found to be defective in materials or workmanship will be repaired or replaced without charge, F.O.B. original point of shipment. The forgoing warranty is in lieu of and excludes all other warranties expressed or implied (including any warranty of merchantability or fitness or purpose). The responsibility of the Seller is limited to the cost of the defective part. Wear caused by faulty maintenance or operation shall not constitute defects. Elastomeric components damaged as a result of maintenance activities, excessive airflow, foreign debris in the process solution, or excessive exposure to direct ultraviolet and thermal radiation shall be excluded. Decomposition by chemical action and chemical precipitate shall not constitute defects. Claims for defective, damaged or improper material or for shortages will not be allowed unless written notice specifying the nature and extent of the defect, damage or shortage is received in the Seller's office within fourteen (14) days from delivery. Seller assumes no responsibility of expense for repairs made on equipment sold by it to Buyer when such repairs are done outside Seller's factory facilities without its written consent. In all cases, a Start-Up certificate issued by SSI is for general conformance to the Manufacturer's installation instructions only after audit for work performed. However, in no cases, SSI can audit 100% of all work performed by others and cannot guarantee their work to fully meet our installation instructions. Warranty for installation labor and services provided by others shall be covered by the warranty of the entity performing those services. Failure by the Installer to fully meet our installation instructions and requirements may result in installation errors which may lead to equipment failure, for which Seller shall not be liable.

7. **Cancellation and Returns Policy**: (A) Cancellations: Any request for order cancellation, rescheduling or modification by Buyer must be made in writing and such action must be approved in writing by an officer of Seller. Such request should be made to Seller at least four (4) weeks from scheduled shipment date in order to be considered. Such cancellation, rescheduling or modification shall be subject to the payment of reasonable cancellation charges, which shall include but not be limited to expenses already incurred for labor and material costs, commitments made by Seller and a reasonable profit. (B) Returns: Any request for product return by Buyer must be made in writing. Returns of products will not be accepted for any reason without prior written consent of Seller and issuance of a Return Material Authorization (RMA) number. Return of products must be shipped freight prepaid by Buyer. Seller will not accept freight charges. Returns may be subject to a 15% restocking fee and any other reasonable charges. Returns made without obtaining prior authorization shall be returned to sender at Buyer's expense. Custom made goods may not be returned under any circumstance.

8. **Limitation of Liability: Notwithstanding anything else to the contrary, Seller shall have no liability for consequential, incidental, punitive, indirect and/or special damages regarding the sale or use of a product even if the potential for such damages has been disclosed to Seller. Seller's total liability for product defect claims shall not exceed the purchase price paid for the product.**

9. **Complete Agreement**: These Terms and Conditions of Sale when combined with Seller's invoice represent the entire agreement between the parties with respect to the subject matter hereof. Language contained in any digital or written instrument from Buyer to Seller serving to modify the terms of any of the foregoing shall be of no effect.

10. **Severability**: If any provision of these Terms and Conditions of Sale shall be deemed illegal or unenforceable, such illegality or unenforceability shall not affect the validity and enforceability of any other provisions hereof, which together shall be construed as if such illegal and unenforceable provision or provisions had not been included herein.

11. **No Waiver**: The failure by Seller to enforce at any time any of the provisions of this agreement, or to exercise any election or option provided herein, shall not be a waiver and shall in no way be construed as a waiver of such provisions or options, nor in any way be construed to affect the validity of this agreement or any part thereof, or the right of Seller thereafter to enforce each and every such provision.

12. **No Indemnification**: Unless otherwise expressly provided in writing by both parties, Seller does not indemnify, nor does it hold Buyer harmless, against any liability, losses, damages and expenses (including attorney's fees) relating to any claim whatsoever, including without limitation, claims for personal injuries, death or property damage related to the products sold hereunder.

13. **Governing Law**; Limitations: The relationship between Buyer and Seller in relation to the products shall be governed by and construed in accordance with the laws of the State of New York, U.S.A. Any legal action with respect to any transaction must be commenced within one year after the cause of action has arisen.

14. **Dispute Resolution**: Actions by Seller for nonpayment by Buyer of the purchase price of products sold by Seller, or for redress of other breaches by Buyer of these Terms and Conditions of Sale, may be brought by Seller, at its option, before any court of competent jurisdiction in the State of New York. At Seller's option, disputes between Buyer and Seller, including all claims for non-performance by Seller, shall be finally settled by arbitration in Poughkeepsie, New York USA.

15. **Foreign Corrupt Practices Act**: Buyer represents and warrants to Seller that it shall comply with all laws in relation to its sale and/or use of the Products and will not pay anything of value to any government employee in connection with the sale of the Products.

16. **Precedence**: In the event of any inconsistency among the referenced documents, attachments, drawings, specifications or other provisions hereof, the following order of precedence shall apply: (1) special terms and conditions agreed to in writing by an Officer of the Seller, (2) these standard terms and conditions of sale, (3) specifications, (4) all other attachments or documents incorporated herein by reference.

SSI Aeration
SMART IDEAS FOR WATER

AFD270 Disc Diffuser

What Makes the a
SSI 9" AFD270 Disc Diffuser Systems
Worldwide Choice?

The SSI 9" Disc Diffuser System combines engineering excellence, superior component quality, and a technically advanced product design. Proven highly durable and efficient in thousands of municipal and industrial installations around the world, this advanced system has reliability built into every stage of performance. SSI's AFD270 comes in several membrane materials including our patented PTFE membrane, designed to use less energy and require minimal maintenance. Industry standand size and shape are interchangable with other manufacturers. The diffuser base is molded with virgin polypropeline for extended performance, and is highly efficient with airflow performance of 1.5-2.5 SCFM.

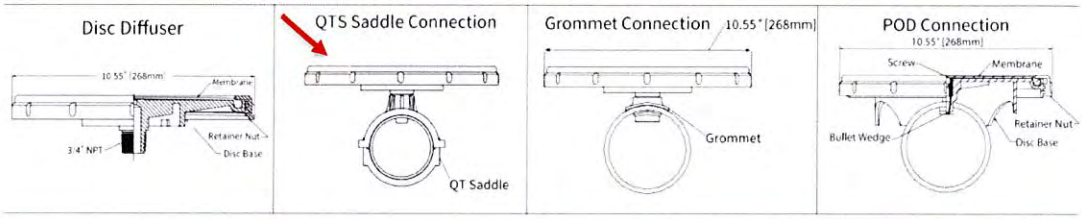



SSI Aeration
An ISO 9001:2015 Certified Company

4 Tucker Drive
Poughkeepsie, New York 12603 USA
www.stamfordscientific.com
email: info@stamfordscientific.com
tel: +1 (845) 454-8171
fax: +1 (845) 454-8094

AFD270 Disc Diffuser

Unique System Strengths

Complete product line – creating the system that fits your needs

SSI manufactures disc diffusers and coarse bubble diffusers, and we mount these products on a wide range of piping materials including PVC, CPVC, PP and Stainless Steel. We have the ability to attach diffusers to pipe using saddles, grommets, or pre-assembled PODS. We can provide retrievable systems or fixed grids, and systems in kit form or mostly factory assembled. We try to understand and anticipate your needs, and fit our recommendations to your situation.

Piping system integrity – thicker wall pipe and double anchors for fewer breakages

Our piping is 38% thicker and has double rod support stands as standard – two anchors for each support location means twice the resistance to hydraulic and thermal loads. Most often supports fail due to temperature and water velocity. SSI locates two anchors where support is needed most, helping to increase product longevity.

Comprehensive design service and after sales support

SSI provides full design services, including biological and mixing calculations, process simulations and hydraulic studies. We maintain a full drafting department with 3D and animation capabilities and we can assist with specifications and CAD drawings. Our service and installation crew can hold your hand during the early stages of the project and our worldwide multilingual staff is dedicated to your complete satisfaction.

Intelligent Upgrade Options

Patented PTFE membranes prolong efficiency and reduce whole-life costs

SSI's patented PTFE membrane barrier properties not only reduce plasticizer extraction, shrinking, and membrane hardening but also limit dynamic changes that can result from swell, such as creep. Compared with uncoated products that are more susceptible to increases in DWP due to more aggressive fouling and changes in physical properties and weight, the PTFE coated membrane improves consistency of DWP (Headloss) values over the product life. This directly impacts long-term power costs and the ability of the system to distribute air uniformly across the tank floor.

Diffuser Parts	Material
1. Retainer nut	PP
2. Membrane	EPDM / PTFE / PEEK / Silicone
3. Diffuser Base	PP

Max. Temperature resistance - 212°F / 100°C

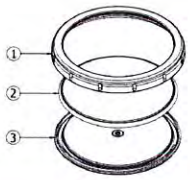

Pods Connection

Factory assembled diffusers mounted on laterals save contractors up to 30% on assembly time. PODS are a viable solution if you want to tank down for a minimum period, if your labor costs are high, or if you have a field labor shortage. For engineers unsure about the skill set of a contractor's field labor, SSI PODS are worry free with fewer field connections, and most connections created in controlled factory settings by trained personnel and automatic machines.

Grommet Connection

Simple to install on site, compact to ship and move. Affordably priced and time tested over 15 years worldwide.

Quick Threaded Saddle

QTS saddles quickly and easily bolt onto the pipe and allow installation of the diffuser with a few simple turns.

Avg Operating Condition per Diffuser	Peak Air Flow per Diffuser	Orifice Size	Slit Qty	Active Surface Area per Diffuser	Weight per Diffuser AFD270
0.45 - 2.5 SCFM 0.8 - 4.5 Sm^3/hr	4.0 SCFM 7.0 Sm^3/hr	1/4" 6mm	6600	0.41ft^2 0.0375 m^2	1.5 lbs 0.68kg

Operating diffusers distant to average operating conditions range might leads to poor uniform distribution and subjected to rapid fouling.

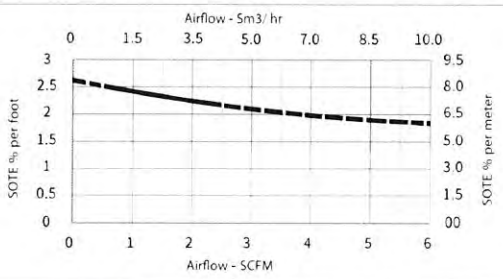

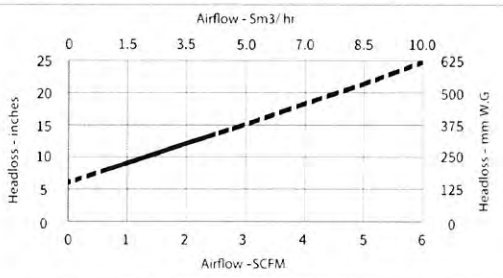

Above curves are generated based on ideal condition. Actual curves for specified project/condition to be provided upon request.

SSI
www.ssiaeration.com

ANAB Certified to ISO 9001:2015 TÜVRheinland

SSI Aeration Inc. 4 Tucker Drive, Poughkeepsie, NY 12603 United States America.
Tel. +1 845-454-8171 Fax: +1 845-454-8094, Email: info@ssiaeration.com

TECHNICAL DATA SHEET

SSI™ ACCESSORIES

NPT SADDLES



Quick Connect NPT Saddles mount on nominal US 4" or metric 114.3mm OD pipe. They allow retrofit of 12" to 9" discs without changing the piping system. Quick Connect NPT Saddles are made of polypropylene, and install into a 5/8" (16mm) hole.

GROMMETS



Grommets are available for round plastic or square stainless steel pipes in US or Metric dimensions. Installation is simple. Multiple sizes are available based on pipe wall thickness. Grommets install into a 1-1/4" (32mm) chamfered hole.

EXPANSION JOINT OPTIONS



Rigid Bolted SS

Expansion Joints are available in three types: Flexible PVC with SS Shell, Rigid Bolted SS, and Anti-rotation, Telescoping PVC. The flexible expansion joints are recommended for disc installations and the positive locking type for tube diffuser projects.



Flexible PVC w/SS shell

Slotted band joints with stainless steel shear rings are suitable for disc-type fine bubble and cap-type coarse bubble lateral plastic piping systems, in conjunction with SSI's fixed and guide support stand system to manage thermal expansion and contraction.

Positive locking bolted stainless steel couplings are suitable for drop pipes, stainless joints, and for all tube diffuser piping systems to restrict header pipe rotation.



Anti-rotation, Telescoping PVC

SSI's Sliding Expansion Joint is an anti-rotational telescopic union which absorbs pipe expansion and contraction to up to 1.5" (38mm).

CHECK VALVES

SSI fine and coarse bubble diffusers are available with optional check valves. These are not required for proper operation since most diffusers are self-checking, but they may give peace of mind to the designer or operator.



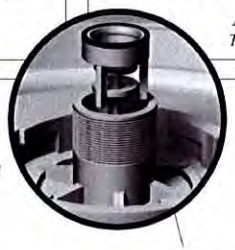



Coarse Band (WBCB) check valves



Snappy Saddle check valves





Tube Diffuser check valves



Disc showing check valve installation

Please see reverse for additional technical data

SSI Aeration
SMART IDEAS FOR WATER

SSI AERATION, INC.

+1-845-454-8171 TEL
+1-845-454-8094 FAX

4 TUCKER DRIVE
POUGHKEEPSIE, NEW YORK 12603 USA
www.ssiaeration.com
EMAIL: info@ssiaeration.com

TECHNICAL DATA SHEET

SSI™ ACCESSORIES *continued*

MOISTURE PURGE SYSTEM

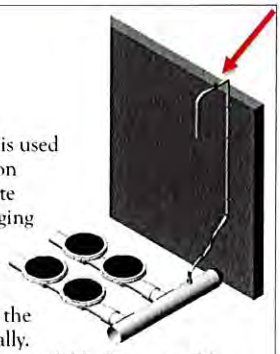

An airlift type purge system is used in all SSI fine bubble aeration systems to remove condensate from the piping system. Purging entrained water helps ensure even air distribution to all diffusers in a grid. A ball valve is supplied with the system and is opened manually. Continuous purge systems are available for retrievable-type aeration systems, or where it is not possible to fasten a purge line to a tank wall.

PRESSURE MONITORING SYSTEM

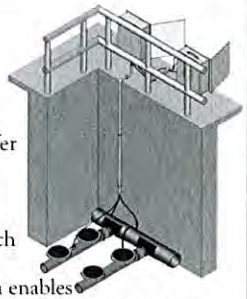

Throughout the life of an aeration system, oxygen transfer efficiency may decline somewhat when diffusers become fouled, but headloss can increase dramatically which in turn increases energy costs. A pressure monitoring system enables the operator to better determine the optimal cleaning frequency of the membranes. The fouling rate can vary by aeration zone, hence it is recommended to install at least one system in each zone.

SUPPORT STANDS



Support Stands are available in 304SS, 316SS or in ABS plastic. SSI's standard is 304SS with drop-in anchor bolts. In our aeration piping systems, support stands fulfill the dual role of anchoring pipes to the floor and controlling thermal expansion and contraction. Special support stands for uneven tank floors, for installing into concrete ballast forms, and for tanks with significant channel velocity (with lateral supports) are also available. ABS support stands are primarily used with disc diffusers and plastic pipe, where a low capital cost is the primary objective.



ABS plastic support stand

TELEMETRY SYSTEM

Adding a Telemetry System to your aeration system will allow you to remotely monitor factors inside your tank from any PC, tablet or mobile device. Telemetry can be installed in new systems or retrofitted through an end cap into existing systems. Telemetry sensors are available to monitor variables in your system such as temperature, vibration, humidity, water detection, DO, and other environmental factors.



ACID DOSING SYSTEM

In-situ Acid Dosing Systems are available to control calcareous deposits in the perforations which will reduce membrane backpressure.



SSI Aeration
SMART IDEAS FOR WATER

SSI AERATION, INC.

+1-845-454-8171 TEL
+1-845-454-8094 FAX

4 TUCKER DRIVE
POUGHKEEPSIE, NEW YORK 12603 USA
www.ssiaeration.com
EMAIL: info@ssiaeration.com

SSI Aeration Inc. 4 Tucker Drive, Poughkeepsie, NY 12603 United States America.
Tel. +1 845-454-8171 Fax: +1 845-454-8094, Email: info@ssiaeration.com

DeZURIK

May 30, 2022

SUBMITTAL

PROJECT NAME

360077 SUEZ ON V port

PURCHASE ORDER

VALVE TYPE

V-Port Ball Valve (VPB)

CONTRACTOR:	CAN
LOCAL SUPPLIER:	CAN
MANUFACTURER:	DeZURIK 250 RIVERSIDE AVE NORTH SARTELL, MN 56377 (320) 259-2000
Quote Number:	272805
I.D. (Rep. Use)	360077 SUEZ ON V port

DeZURIK

TABLE OF CONTENTS

A Data Sheet is included for each line item on the purchase order.
Document numbers are listed at the bottom of the Data Sheet.
Any one drawing may apply to more than one item number.
All documents are assembled in alpha/numeric order within each section

- DATA SHEETS
- INSTALLATION DRAWINGS & CROSS SECTION DRAWINGS

DeZURIK

Submittal Data Sheet

Date: 05/30/2022

CAN

QUOTE NUMBER 272805
I.D. (Rep. Use) 360077 SUEZ ON V port
REV

PROJ. 360077 SUEZ ON V port

Fact. ITEM	Cust. ITEM	QTY	DESCRIPTION
1		4	

Style	V-Port Ball Valve
Size	14 Inch (350mm)
End Connection	Class 150; Flanged Drilling; ISA 75.08.02 and IEC 534-3-2F-F
Body Material	317 Stainless Steel
Packing	PTFE Chevron; Temperature to 500 Degree F. (260 Degree C.)
Ball Material	317 SST; Heat Treated; Electroless Nickel Overlay to 700 Degree F.
Shaft	2205 Duplex Stainless Steel
Seat Type	Rigid 317 Stainless Steel; Heat Treated; Electroless Nickel Overlay; Temperature to 450 Degree F.
Bushing	317 SST Wire Mesh Encapsulated in PTFE Liner to 500 Degree F.
Coating or Paint	4 mils minimum (non-stainless steel parts) of Blue DeZURIK Epoxy (NSF Std. 61) on Exterior with Standard (SP10) surface prep
Actuator Type	PowerRac Cylinder; 8 In Dia

DeZURIK

Submittal Data Sheet

Date: 05/30/2022

CAN

QUOTE NUMBER 272805
I.D. (Rep. Use) 360077 SUEZ ON V port
REV

PROJ. 360077 SUEZ ON V port

Fact. ITEM	Cust. ITEM	QTY	DESCRIPTION
2		4	

Style	V-Port Ball Valve
Size	14 Inch (350mm)
End Connection	Class 150; Flanged Drilling; ISA 75.08.02 and IEC 534-3-2F-F
Body Material	Carbon Steel
Packing	PTFE Chevron; Temperature to 500 Degree F. (260 Degree C.)
Ball Material	317 SST; Heat Treated; Electroless Nickel Overlay to 700 Degree F.
Shaft	2205 Duplex Stainless Steel
Seat Type	Rigid 317 Stainless Steel; Heat Treated; Electroless Nickel Overlay; Temperature to 450 Degree F.
Bushing	317 SST Wire Mesh Encapsulated in PTFE Liner to 500 Degree F.
Coating or Paint	4 mils minimum (non-stainless steel parts) of Blue DeZURIK Epoxy (NSF Std. 61) on Exterior with Standard (SP10) surface prep
Actuator Type	PowerRac Cylinder; 8 In Dia

VALVE SIZE		DIMENSIONS INCHES/MILLIMETERS												
		A		B	C	D	E	F	G		H	J	K	
IN	MM	ISA	ASME										ISA	ASME
10	250	11.69/297	13.00/330	5.50/140	8.91/226	9.50/241	13.38/340	1.31/33	12	1.00/25	14.25/362	16.00/406	1.88/48	3.19/81
12	300	13.31/338	14.00/356	6.38/162	9.91/252	10.50/267	14.38/365	1.38/35	12	1.00/25	17.00/432	19.00/483	1.94/49	2.62/67
14	350	15.75/400		7.50/191	10.86/276	11.47/291	15.34/390	1.50/38	12	1.12/28	18.75/476	21.00/533	2.31/59	
16	400	15.75/400		6.69/170	13.25/337	14.06/357	17.56/446	1.62/41	16	1.12/28	21.25/540	23.50/597	2.69/68	
18	450	18.00/457		7.62/194	14.44/367	15.25/387	18.75/476	1.75/44	16	1.25/32	22.75/578	25.75/654	2.81/71	

ACTUATOR NUMBER	DIMENSIONS INCHES/MILLIMETERS		
	M	N	P
PR_-R2_-PC6	3.38/86	6.62/168	16.00/406
PR_-R2_-PC8	4.81/122	10.25/260	16.12/409

A	VALVE
B	ACTUATOR
C	CYLINDER
P	CONNECTING PARTS

NOTE:

1. FACE TO FACE DIMENSIONS PER ASME STANDARD B16.10 (F1L) OR ISA STANDARD 75.08.02 (F1S).
2. SEE A40129 FOR NON-ASME FLANGE DRILLING.

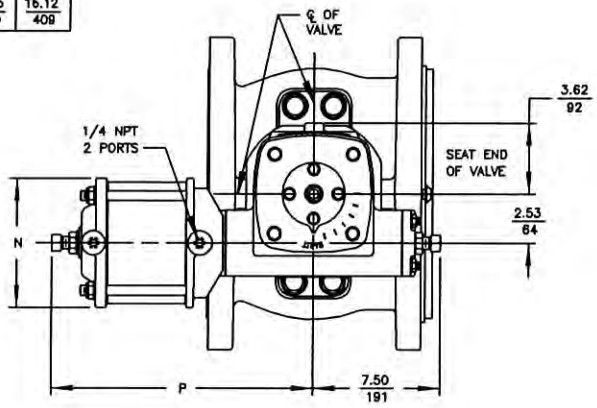

NOTICE
THIS DRAWING DOES NOT SHOW ACTUATOR ACCESSORIES. IF ACCESSORIES ARE REQUIRED, REFER TO THE APPROPRIATE ACCESSORY INSTALLATION DRAWING FOR DIMENSIONS AND OTHER RELATED INFORMATION.

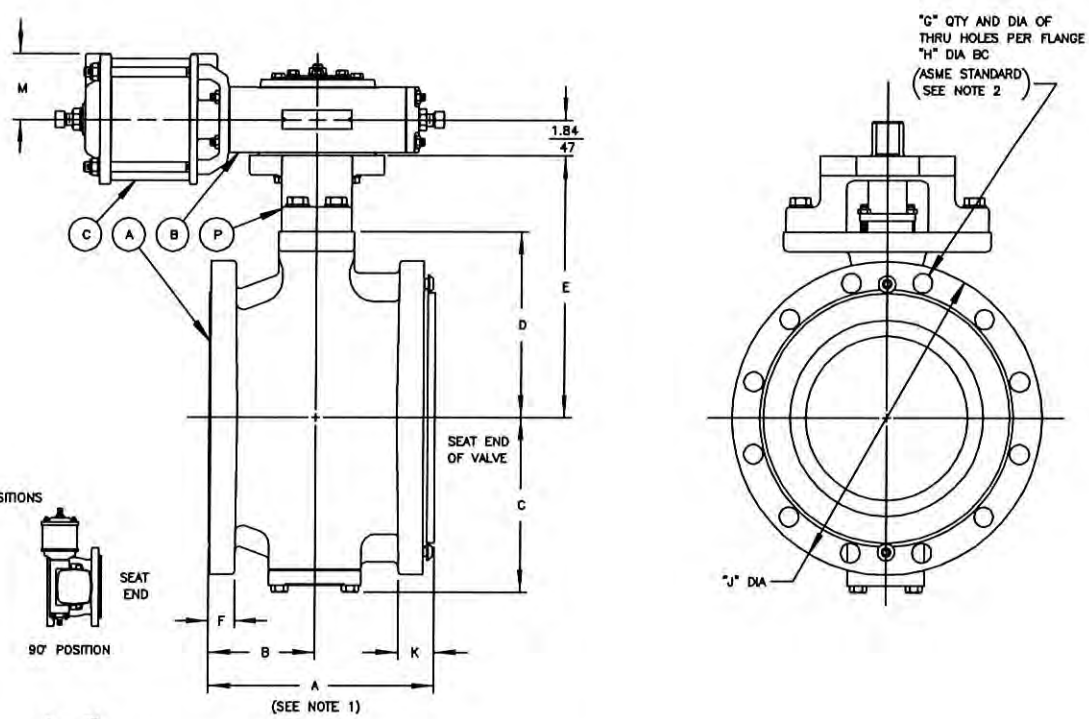

ACTUATOR MOUNTING POSITIONS

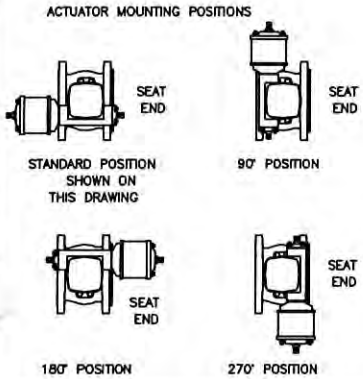

G							
F							
E	60312	02/01/18					
D	63393	04/28/17					
C	52892	11/27/96					
B	53177	04/18/95					
A	53379	05/28/93					

DeZURIK
APCO | HILTON
www.dezurik.com

VPB V-PORT BALL VALVES (F1L)(F1S) SIZE 10-18 CL150 FLANGED POWERRACK PR_-R2_-PC_ PNEUMATIC CYLINDER ACTUATOR

DOCT. CODE	DRAWN	APPROVED	
C1	JS	FC	A41883
	CHECKED TNB	DATE 01-28-93	

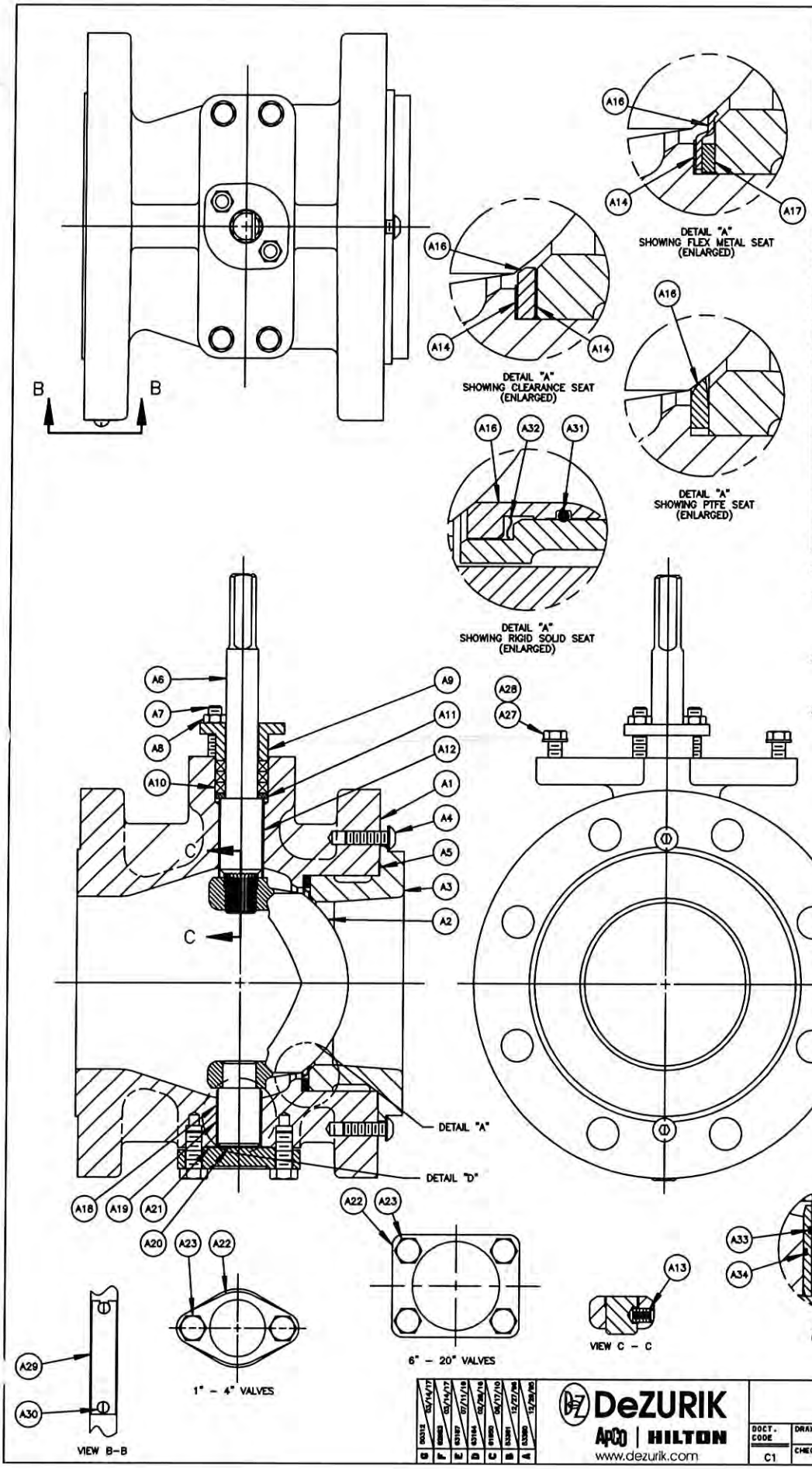

NO	PART NAME	QTY
A1	BODY	1
A2	BALL	1
A3	RETAINER	1
A4	SCREW	2
A5	GASKET (RETAINER)	1
A6	SHAFT UPPER	1
A7	STUD	2
A8	NUT	2
A9	GLAND	1
A10	PACKING	–
A11	THRUST WASHER	1
A12	BEARING UPPER (BODY)	1
A13	SET SCREW	1
A14	GASKET (FLEX METAL SEAT)	1
A14	GASKET (CLEARANCE SEAT)	2
A16	SEAT	1
A17	GASKET (FLEX METAL SEAT)	1
A18	SHAFT LOWER	1
A19	BEARING LOWER (BODY)	1
A20	THRUST BEARING (EXCEPT HARD BRG)	1
A21	GASKET (COVER)	1
A22	COVER	1
A23	SCREW (1" – 4" VALVES)	2
A23	SCREW (6" – 20" VALVES)	4
A24		
A25		
A26		
A27	SCREW	4
A28	LOCKWASHER	4
A29	TAG, (1" – 12" CLASS 300 VALVES)	1
A30	SCREW (1" – 12" CLASS 300 VALVES)	2
A31	SEAL (SOLID METAL SEAT)	1
A32	SPRING (SOLID METAL SEAT)	1
A33	SEAL (INNER) (SEALED BRG ONLY)	2
A34	SEAL (OUTER) (SEALED BRG ONLY)	2

NOTE:

1. WHEN ORDERING PARTS, INCLUDE VALVE SIZE AND PART NUMBER FROM DATA PLATE. ALSO INCLUDE THIS DRAWING NUMBER WITH PART NAME, NUMBER AND QUANTITY.
2. RECOMMENDED SPARE PARTS ARE ITEMS NO A5, A10, A11, A12, A14, A16, A17, A19, A20, A21, A31, A33 AND A34. (ADD A2 FOR TUNGSTEN TRIM)
3. VALVE IS SHOWN IN CLOSED POSITION. CCW ROTATION OF UPPER SHAFT OPENS VALVE.

G	50312	03/14/17	
F	60063	03/14/17	
E	63187	07/11/16	
D	63164	02/28/16	
C	61650	06/17/10	
B	53381	12/27/96	
A	53380	12/28/95	

DeZURIK
APCO | HILTON
www.dezurik.com

VALVE ASSEMBLY
1 – 20 V-PORT BALL VALVES, FLANGED

DOCT. CODE	DRAWN	APPROVED	
C1	CHECKED RJP	DATE 11/02/94	A45077

NO	PART NAME	QTY
B1	HOUSING	1
B2	BEARING (HOUSING)	1
B3	RACK BEARING	1
B4	PIN	1
B5	RACK	1
B6	LOCKWASHER	1
B7	SCREW (RACK)	1
B8	GEAR	1
B9	COLLET ASSEMBLY	1
B9A	ADJUSTING SCREW	1
B9B	WEDGE	4
B9C	O-RING (R1 ACTUATOR)	2
B9C	O-RING (R2 ACTUATOR)	1
B9D	NUT	1
B9E	LOCKWASHER	1
B9F	POINTER	1
B9G	SCREW	4
B9H	WASHER	4
B10	O-RING	1
B11	TOP COVER	1
B12	BEARING (TOP COVER)	1
B13	GASKET (TOP COVER)	1
B14	WASHER	4
B15	SCREW	4
B16	GASKET (END COVER)	2
B17	END COVER	1
B18	STUD	8
B19	LOCKWASHER	8
B20	NUT	8
B21	STOP SCREW	1
B22	JAM NUT	1
B23		
B24	DATA PLATE	1
B25	DRIVE SCREW	2
B26	SCREW	4
B27	LOCKWASHER	4
B28	GASKET	1
C00	CYLINDER ASSEMBLY	1

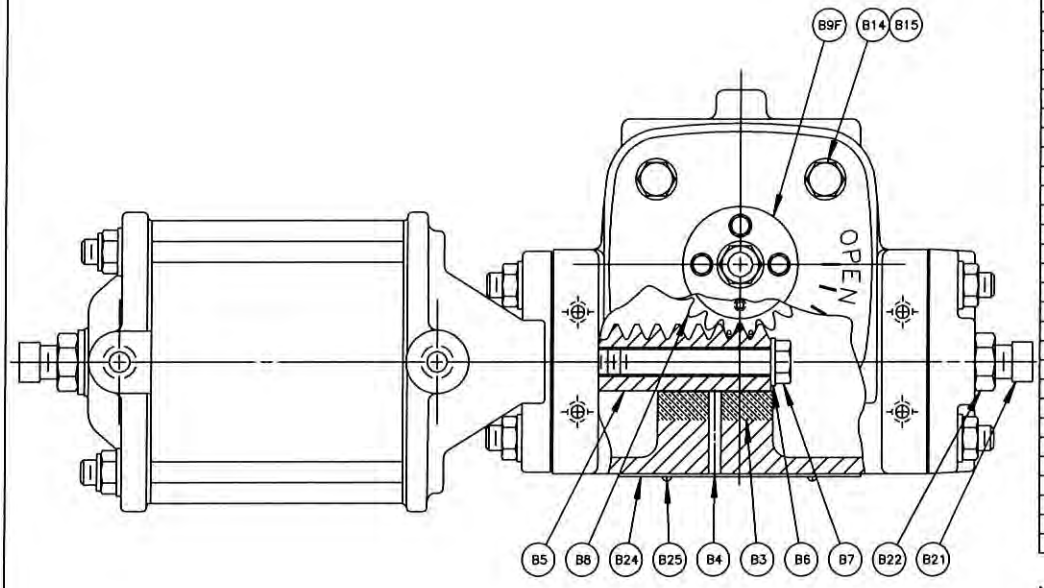

NOTE:

1. WHEN ORDERING PARTS, INCLUDE VALVE SIZE AND PART NUMBER FROM DATA PLATE. ALSO INCLUDE THIS DRAWING NUMBER WITH PART NAME, NUMBER AND QUANTITY.
2. RECOMMENDED SPARE PARTS ARE ITEMS NO B9C, B10, B13, B16 AND B28.

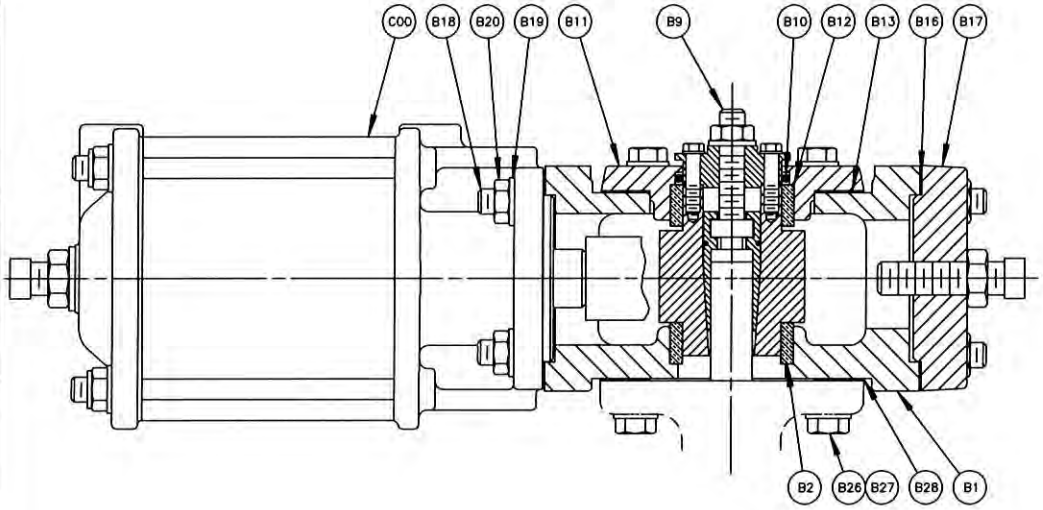

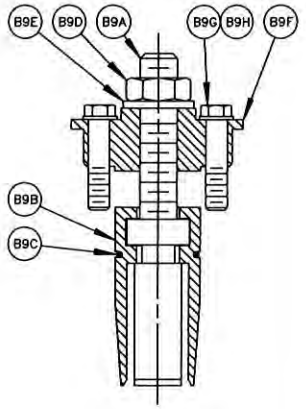

COLLET ASSEMBLY (B9)
(VIEW ENLARGED)

J	H	G	F	E	D	C	B	A		
61681	61681	50312	52892	51681	51983	50312	50312	50312		
10/05/15	02/12/10	09/14/98	09/15/95	05/22/92	03/29/92	12/17/91	11/05/91	10/29/91		

DeZURIK
Sartell, MN USA 56377
www.dezurik.com

PR_-R__-PC_ POWERRAC DOUBLE ACTING
CYLINDER ACTUATOR ASSEMBLY
FOR USE WITH VALVES WITH SQUARE SHAFT

DOCT. CODE	DRAWN	APPROVED	
C1	SN	DT	A37260
	CHECKED TNB	DATE 09-04-91	

NO	PART NAME	QTY
C1	CYLINDER HEAD	1
C2	BEARING	1
C3	ROD SEAL (1 SEAL AND 2 BACKUP RINGS)	1
C4	PISTON ROD	1
C5	O-RING (CYLINDER TUBE)	2
C6	TUBE	1
C7	PISTON	1
C8	O-RING (PISTON)	1
C9	SEAL (PISTON)	1
C10	NUT	1
C11	CYLINDER CAP	1
C12	TIE ROD (PC4 & PC6 CYL)	4
C12	TIE ROD (PC8 CYL)	6
C13	WASHER (PC4 & PC6 CYL)	4
C13	WASHER (PC8 CYL)	6
C14	O-RING (PISTON ROD)	1
C15	LOCK NUT (PC4 & PC6 CYL)	4
C15	LOCK NUT (PC8 CYL)	6
C16	THREAD SEAL (CYLINDER CAP)	–
C17	JAM NUT	1
C18	SET SCREW	1

NOTE:

1. WHEN ORDERING PARTS, INCLUDE VALVE SIZE AND PART NUMBER FROM DATA PLATE. ALSO INCLUDE THIS DRAWING NUMBER WITH PART NAME, NUMBER AND QUANTITY.
2. RECOMMENDED SPARE PARTS ARE ITEMS NO C3, C5, C8, C9, C14 AND C16.

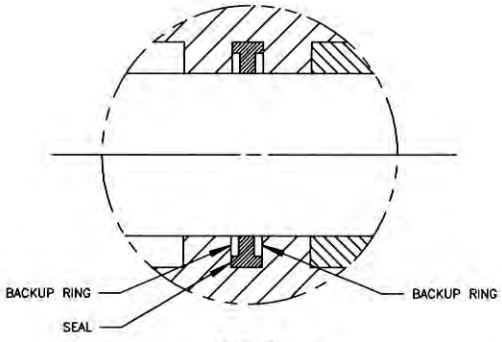

DETAIL 'B'
SHOWING ROD SEAL ITEM C3



PC4 CYLINDER

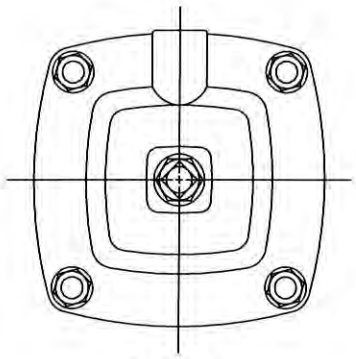

PC6 CYLINDER

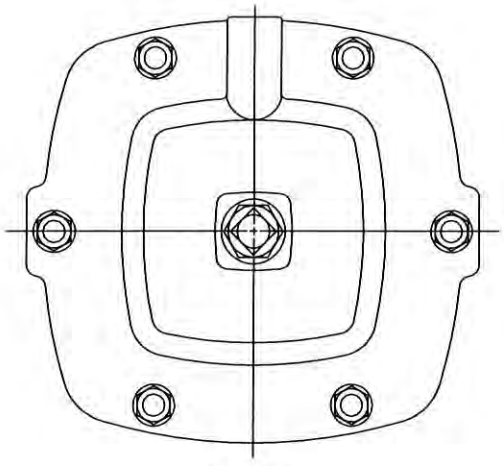

PC8 CYLINDER

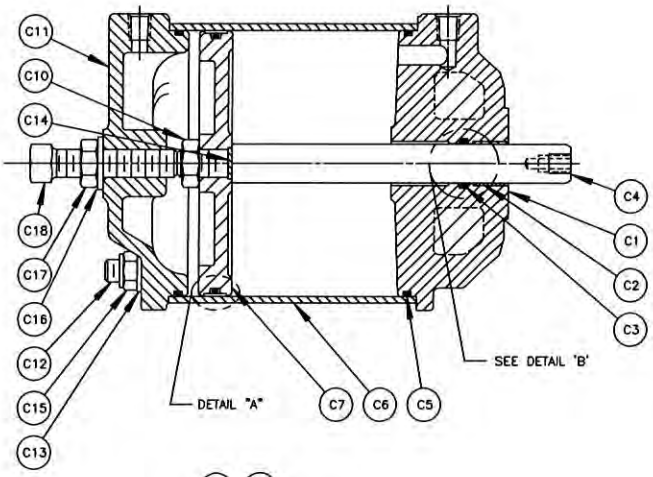

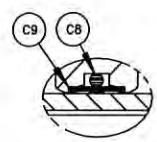

DETAIL "A"

G	F	E	D	C	B	63158	03/07/16
					A	50312	01/30/92

DeZURIK
Sartell, MN USA 56377
www.dezurik.com

PC4, PC6 & PC8 CYLINDER ASSEMBLY FOR USE WITH POWER RAC DOUBLE ACTING CYLINDER ACTUATORS

DOCT. CODE	DRAWN	APPROVED	
C1	SN	DT	A37259
	CHECKED TNB	DATE 09-04-91	

NO	PART NAME	QTY
P1	SEAL (SEE NOTE 3)	1
P2	ADAPTER	1
P3	BEARING (SEE NOTE 3)	1
P4		
P5	GASKET (S2, IS_ SEATS ONLY)	1
P6	SCREW	4
P7	SPACER (14" CLASS 150 ONLY)	2

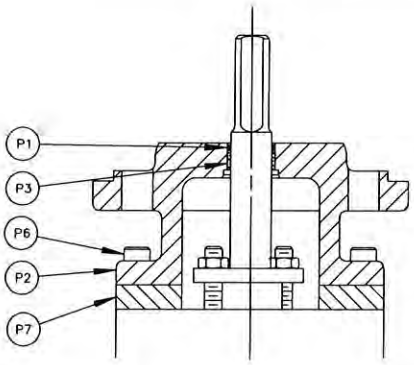

BHP VALVE WITH DR55 AND DR85 ACTUATORS

NOTE:

1. WHEN ORDERING PARTS, INCLUDE VALVE SIZE AND PART NUMBER FROM DATA PLATE. ALSO INCLUDE THIS DRAWING NUMBER WITH PART NAME, NUMBER AND QUANTITY.
2. RECOMMENDED SPARE PARTS ARE ITEMS NO. P1 & P5.
3. ITEM P1 (SEAL) IS USED WITH DIAPHRAGM DR40/55/85 AND POWERRAC PR ACTUATORS ONLY.

   ITEM P3 (BEARING) IS USED WITH LEVER AND DIAPHRAM DR55_ & DR85_ ACTUATORS ONLY.

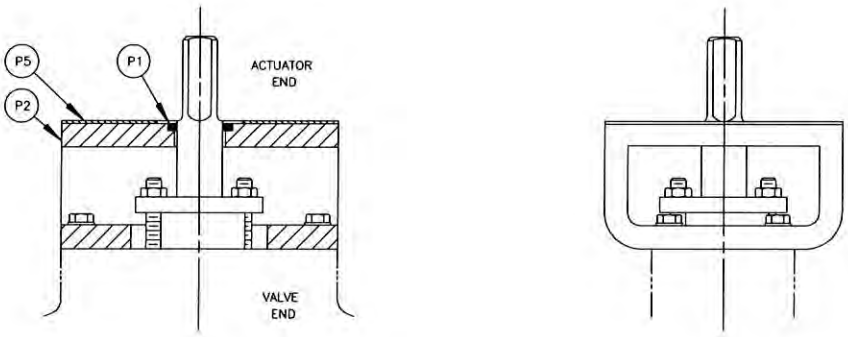

VIEW SHOWING FABRICATED ADAPTOR

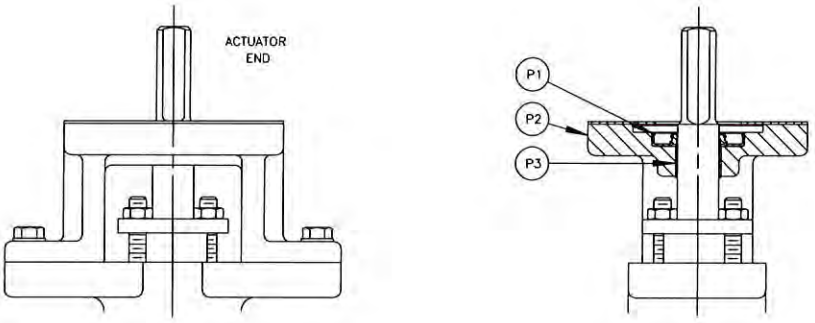

VIEW SHOWING CAST ADAPTOR

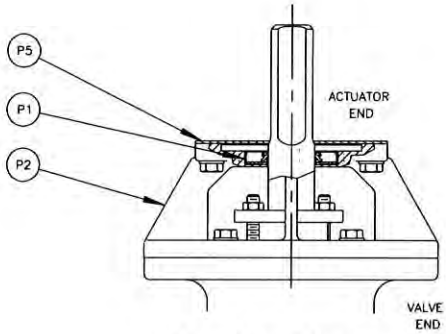

VIEW SHOWING ADAPTOR FUW BHP VALVES

K	J	H	G	F	E	D	C	B	A		
50312	50312	60110	54088	50312	52886	52886	52753	52492	51980		
1/25/16	02/19/02	01/02/02	12/04/97	08/09/95	01/06/95	09/19/94	04/29/94	04/25/94	09/11/92		

DeZURIK
Sartell, MN USA 56377
www.dezurik.com

CONNECTING PARTS FOR USE WITH LEVER, POWERRAC, MANUAL GEAR AND DIAPHRAGM ACTUATORS ON VPB, RCV AND BHP VALVES

DOCT. CODE	DRAWN	APPROVED	
C1	SN	JEB	A-39819
	CHECKED TNB	DATE 09-19-91	

DeZURIK
APCO | HILTON

BULLETIN
JUNE 2020

15.00-1

DeZURIK VPB V-PORT BALL VALVES

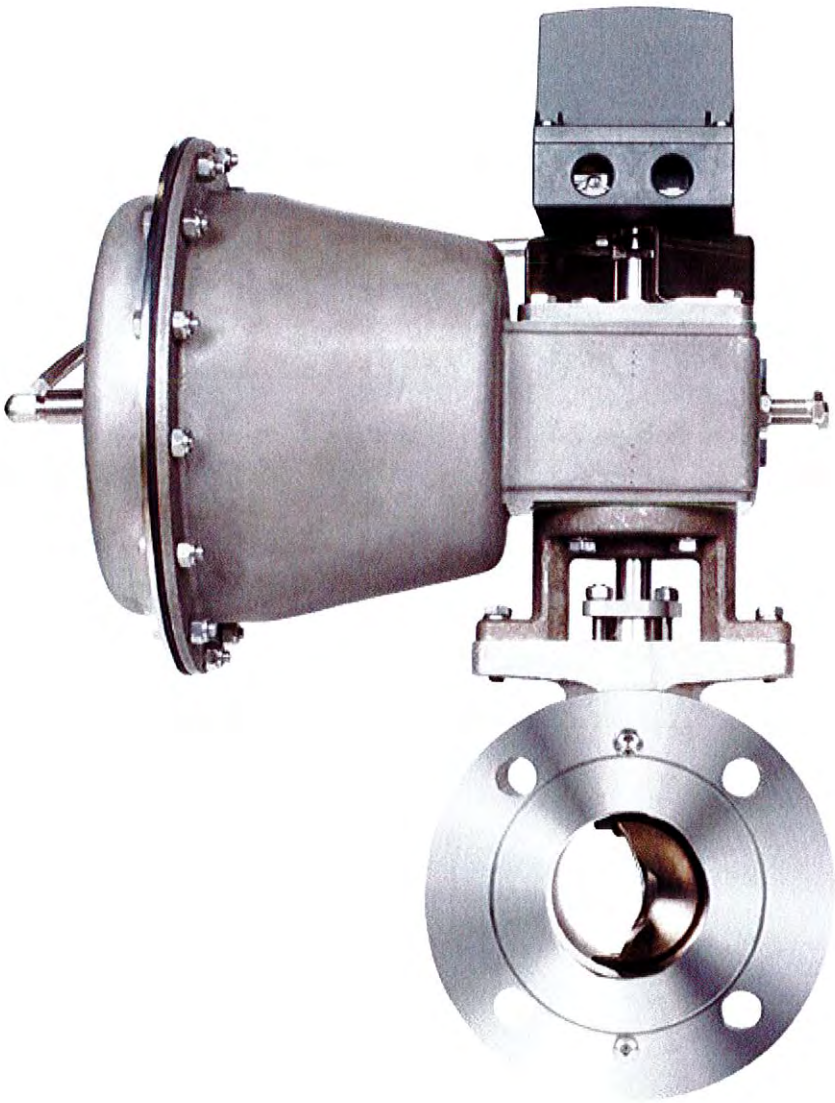

www.dezurik.com

VPB V-Port Ball Valves

Design and Construction

DeZURIK V-Port Ball valves deliver superior performance and reliability required to optimize process performance. This versatile valve is designed for control of fibrous suspension applications, plus clean, dirty, viscous and corrosive liquids and gases.

The VPB has an ASME 150 class valve in size range 1-20" and an ASME 300 class valve in size range 1-12". DeZURIK V-Port Ball valves feature one-piece body construction and are available in flanged or flangeless end connections. They conform to or exceed North American and International Standards for control valves. Superior control performance is designed into the geometry of the ball for critical management of flow. A locked ball-to-shaft connection ensures no lost motion for critical control. Bearings, covers and fasteners are designed for maximum valve reliability.

When operated by a high quality DeZURIK actuator and controlled by one of many high performing positioners, the DeZURIK V-Port Ball control valve can deliver control accuracy exceeding 0.5% as measured by the Benchmark Control Valve Diagnostics™ System. Control accuracy will increase process plant efficiency, improve overall profitability and reduce control valve life-cycle costs.

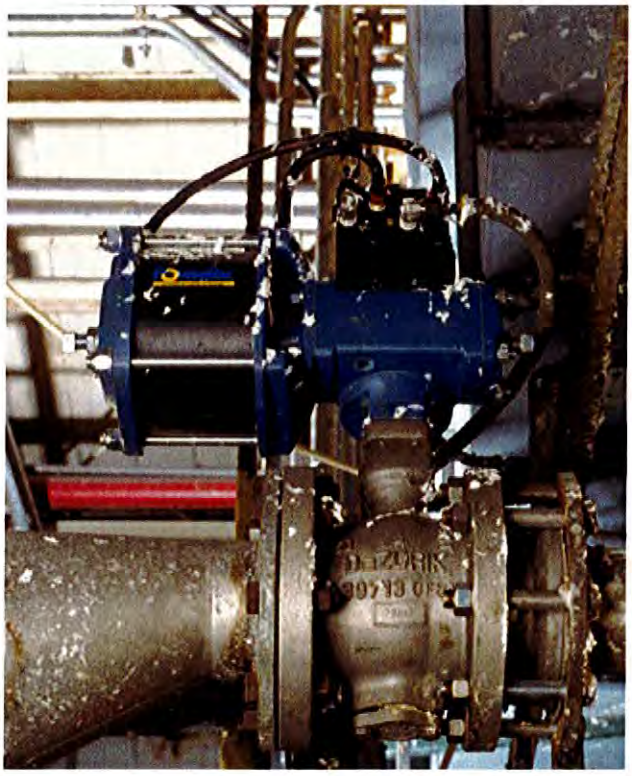

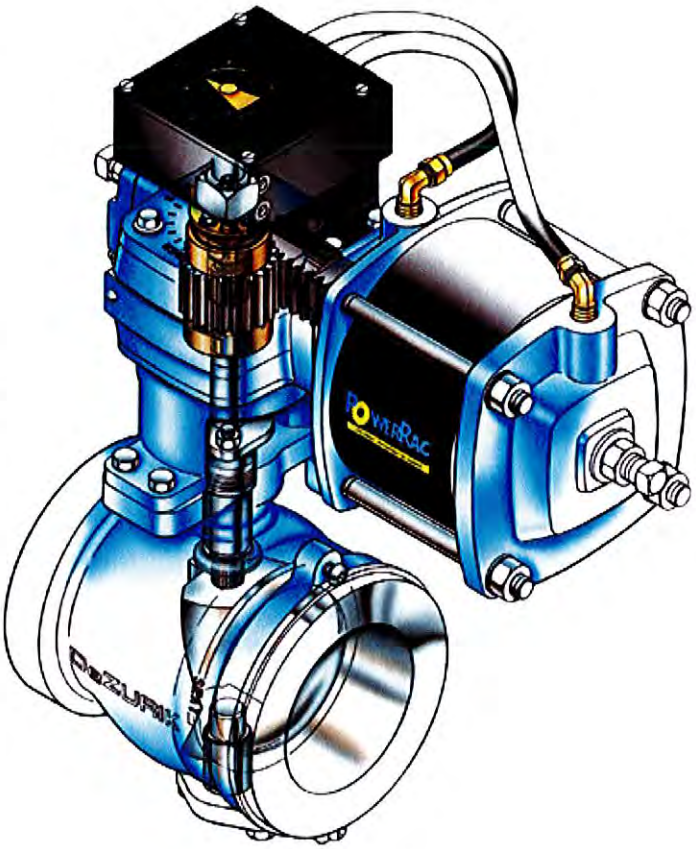

In the event maintenance is needed, DeZURIK's unique design facilitates fast, easy breakdown and assembly of valve components with no special tools required. The result is reduced maintenance time and the lowest overall cost of ownership.

Drop-in-place, self-aligning and interchangeable seat options offer ease in maintenance. Available seat options include reinforced PTFE, flexible metal, rigid metal and clearance.

© 2020 DeZURIK, Inc.



Streamlined Flow Passages

DeZURIK V-Port Ball valves feature a streamlined flow passage, providing maximum efficiency (Cv/Kv per valve size) and minimizing erosion inside the valve body.

Rugged, Easy-to-Maintain Construction

The heavy-duty cast body is a one-piece design for increased installed-pipe integrity and minimal potential leak paths. Stainless steel construction combined with drop-in seats and a splined shaft and ball connection makes the DeZURIK V-Port Ball valve easy to maintain.

Carbon Steel and High Alloy Valves Available

VPB valve bodies are available in 316 and 317 stainless steel, carbon steel and Hastelloy C.

Laying Length Flexibility

DeZURIK VPB valves offer the ultimate in face-to-face flexibility. The solid one-piece body is available in either ASME B16.10 or ANSI/ISA take-out dimensions. V-Port Ball valves are available in flanged or flangeless construction to meet individual requirements and common piping standards. For added versatility, these valves meet IEC, ISO and EN face-to-face dimensions. In plants that have an installed base of both ASME B16.10 and ANSI/ISA control valves, VPB users have been able to minimize storeroom inventory by stocking valve bodies, ANSI/ISA retainers and ASME B16.10 retainers. A replacement valve with either face-to-face dimension can be quickly installed. DeZURIK also offers an integrally flanged one-piece ASME B16.10 body. Laying length flexibility is just another example of how the VPB can save money.

International Flange Drilling

DIN 10, 16, 25 and 40, and JIS 10, 16 and 20 flange drilling bolt circle options are available in addition to ASME B16.5.



Uninterrupted Gasket Surface

V-Port Ball valves feature a full, uninterrupted, raised-face gasket surface that provides maximum gasket integrity. The gasket surface provides full seal contact area with ASME B16.20 gaskets.

Self-Aligning Ball and Seat

The self-aligning ball and seat on the VPB valve reduces lengthy setup time during repair and reassembly. Valves can easily be returned to like-new performance without time-consuming special procedures. And, because of the spring-loaded metal seat design, the ball and seat self-compensate for wear on either surface.



Common Valve Components

DeZURIK's V-Port Ball valve was designed to share a majority of valve components with the DeZURIK RCV Rotary Control valve. The two valves use the same bodies, packing components, bearings, brackets and fasteners. The common components reduce spare parts in inventory requirements and associated costs for plants utilizing both styles of DeZURIK control valves.

Stainless Steel Fasteners

As standard, all DeZURIK V-Port Ball valve fasteners are stainless steel, providing easy disassembly. An additional maintenance feature is a bottom access cover for valve disassembly and reassembly.

Streamlined Maintenance

DeZURIK V-Port Ball valves feature the simplest maintenance procedures among control valves available. There are no threaded trim parts. The seat retainer and trim components drop in place ensuring precise alignment of plug and seat. Disassembly and reassembly are easily completed with no special wrenches or other tools required. On viscous and suspended fibrous services where routine maintenance is expected, the VPB's drop-in trim, optional sealed bearings and self-aligning ball/seat reduce maintenance costs and minimize lost production.





V-Ball Design

Utilizing computer-aided design and extensive flow-loop testing, the v-orifice was designed to provide the high rangeability and precision throttling required on fibrous suspension applications, as well as clean or dirty liquids and gases.

The straight through flow passage provides maximum efficiency and excellent erosion resistance. The ball can be furnished with a range of high-alloy materials, all provided with a heat-treated nickel overlay. This overlay provides a non-porous and lubricous surface, resulting in greater corrosion resistance and less sliding friction. For abrasive and high temperature applications, a 317 stainless steel ball can be furnished with a tungsten carbide overlay or a Hastelloy C ball with nickel overlay can be provided.

Sealed Bearings

The sealed-bearing option prevents media from entering the bearing areas, which can hinder valve operation. PFA Fluoropolymer or FFKM Perfluoroelastomer seals are available for bearings that need exceptional protection from scaling, plating, abrasive or polymerizing media.





Corrosion-Resistant Bearings

The one-piece bearing provides a large area of radial support to the shaft. The shaft is fully supported, greatly reducing shaft fatigue. The 317 stainless steel wire mesh reinforced PTFE bearing has a low coefficient of friction that minimizes operating torques and reduces actuator sizing requirements. For severe-service applications, a cobalt-chromium alloy bearing is available. A sealed-bearing option is also available.

Splined Shaft with Solid Ball-to-Shaft Connection

The splined shaft and ball with locking torque screw on DeZURIK V-Port Ball valves provide a high-strength, positive connection that effectively eliminates mechanical backlash and hysteresis. The splined connection with locking torque screw ensures accurate, precise positioning of the ball. The machined diameter of the shaft provides blow-out proof protection.

Seat Options

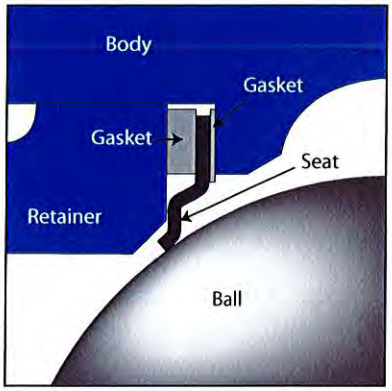

Flexible Metal Seat

The flexible metal seat is designed to shear fibrous fluids and provides shutoff up to ANSI/FCI 70.2 Class IV standard. Flexible metal seats are rated to the full valve pressure rating with the valve installed in the flow-to-open direction and rated to 150 psi (1030 kPa) pressure differential when installed in the flow-to-close direction.

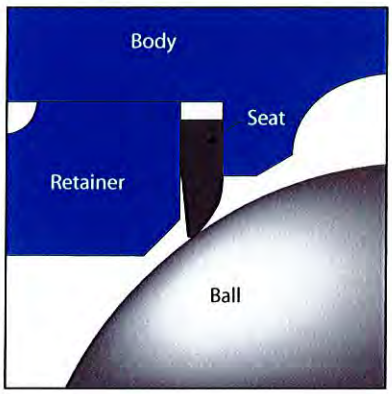

Reinforced PTFE Seat

Reinforced PTFE seats are typically used on clean fluid applications where ANSI/FCI 70.2 Class VI shutoff is required. DeZURIK V-Port Ball valves feature a reinforced PTFE seat, designed for flow-to-open operation, rated to 285 psi (1895 kPa) pressure differential. For added versatility, all V-Port Ball valve seat options are field-interchangeable.

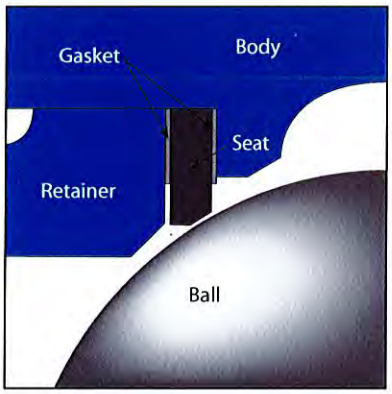

Clearance Seat

The clearance seat provides maximum controllability and minimum hysteresis in applications that do not require tight shutoff. This bi-directional seat eliminates seat friction. Shutoff is 5% of valve's maximum flow when closed.

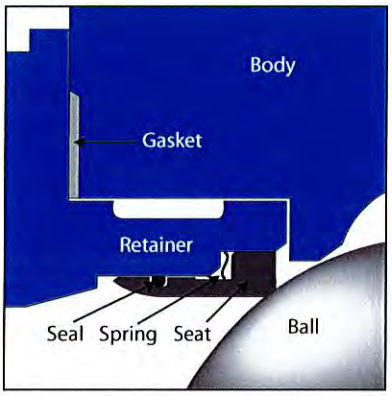

Rigid Seat

Rigid seats are available for abrasive application including reclaimed fiber systems and applications with suspended chemical solids. The rigid seat provides shutoff performance to ANSI/FCI 70.2 Class IV. Materials include 317 stainless steel and Hastelloy C, all with heat treated nickel overlay. For enhanced abrasion resistance, a 317 stainless steel seat with tungsten carbide seating surface and solid Cobalt-Chromium alloy bearing is available.

An optional nickel-chromium spring can be substituted for the 17-7 PH stainless steel seat spring when added corrosion resistance is required.

The rigid seat is designed for flow-to-open operations and is field-interchangeable with the reinforced PTFE, flexible metal and clearance seats.

Intelligent Positioners

Digital positioners can be used in a conventional 4-20 mA, analog control environment. They can also be used with HART, Foundation Fieldbus, or Profibus communication protocols bringing you access to diagnostic capabilities that will allow you to ensure your process is operating at its peak effectiveness.



DeZURIK P30A



DeZURIK P85

Throttling Control

The V-Port Ball valve design ensures unsurpassed accuracy over the 90° range of operation. Splined and locked ball-to-shaft connection, computer-designed ball, characterized v-port, low-friction bearings and low-friction packing combine to give superior control, including fast, accurate response to signal changes. These rigid connections effectively eliminate mechanical backlash and hysteresis.

The V-Port Ball valve with a high quality DeZURIK actuator and one of many high performing positioners will exceed 0.5% control accuracy, delivering over 200 discrete positions. This exceeds industry valve dynamic performance standards as well as the accuracy levels of most alternative pneumatically actuated control valves.

To enhance accuracy of the VPB in real world process systems, the control valve assembly can be fitted with a smart digital positioner that not only provides near zero air bleed but also can be used in control systems using HART, Foundation Fieldbus, or Profibus protocols. This allows precise control and feedback of valve performance to the Distributed Control System (DCS).

Performance Testing

Control valve performance is tested with a BenchMark Control Valve Diagnostic™ system. Each valve has a discrete test result that can be referenced through the valve's serial number. V-Port Ball valve performance accuracy provides in excess of 200 repeatable positions. With routine maintenance, field monitoring or monitoring through a digital positioner, this performance level can be maintained throughout the life of the valve.

Control Valve Test Report

All VPB valve/actuator/positioner assemblies are tested for accuracy. The optional CVT Control Valve Test Report can be ordered which documents the response measurement from step inputs per ISA-75.25.01-2000 (R2010).

Actuator Flexibility Options

V-Port Ball valves are available with DeZURIK PowerRac® or Diaphragm actuators. The actuator top mounting pads or adapter brackets of currently manufactured DeZURIK rotary control and isolation valves (RCV, VPB, BHP) are compatible with the ISO 5211 standard. This common actuator platform increases flexibility and helps reduce spare parts inventory.

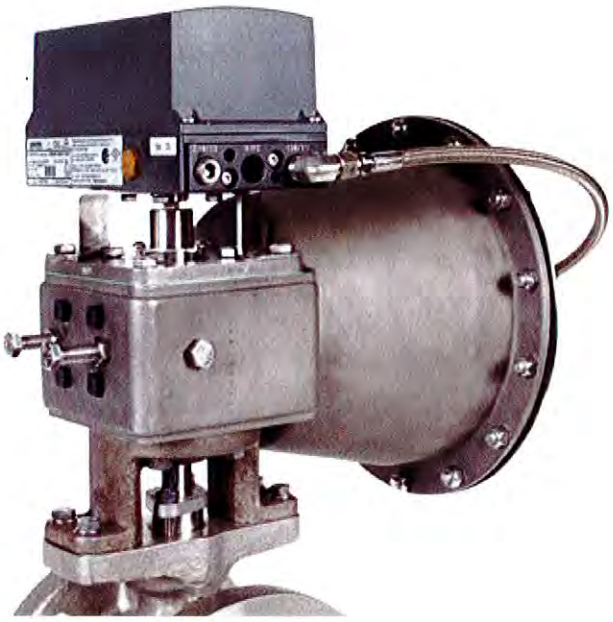

Close Coupling of Actuator to Valve

DeZURIK Diaphragm and PowerRac® actuators rigidly connect to the valve and the positioner on the actuator housing. This accurately feeds exact valve position directly to the positioner. In addition, the close coupling of the actuator to the valve makes the total package as compact as possible.

Accessories

A full line of accessories integrated to the actuator system is available to meet your individual mill/plant requirements.

Materials of Construction

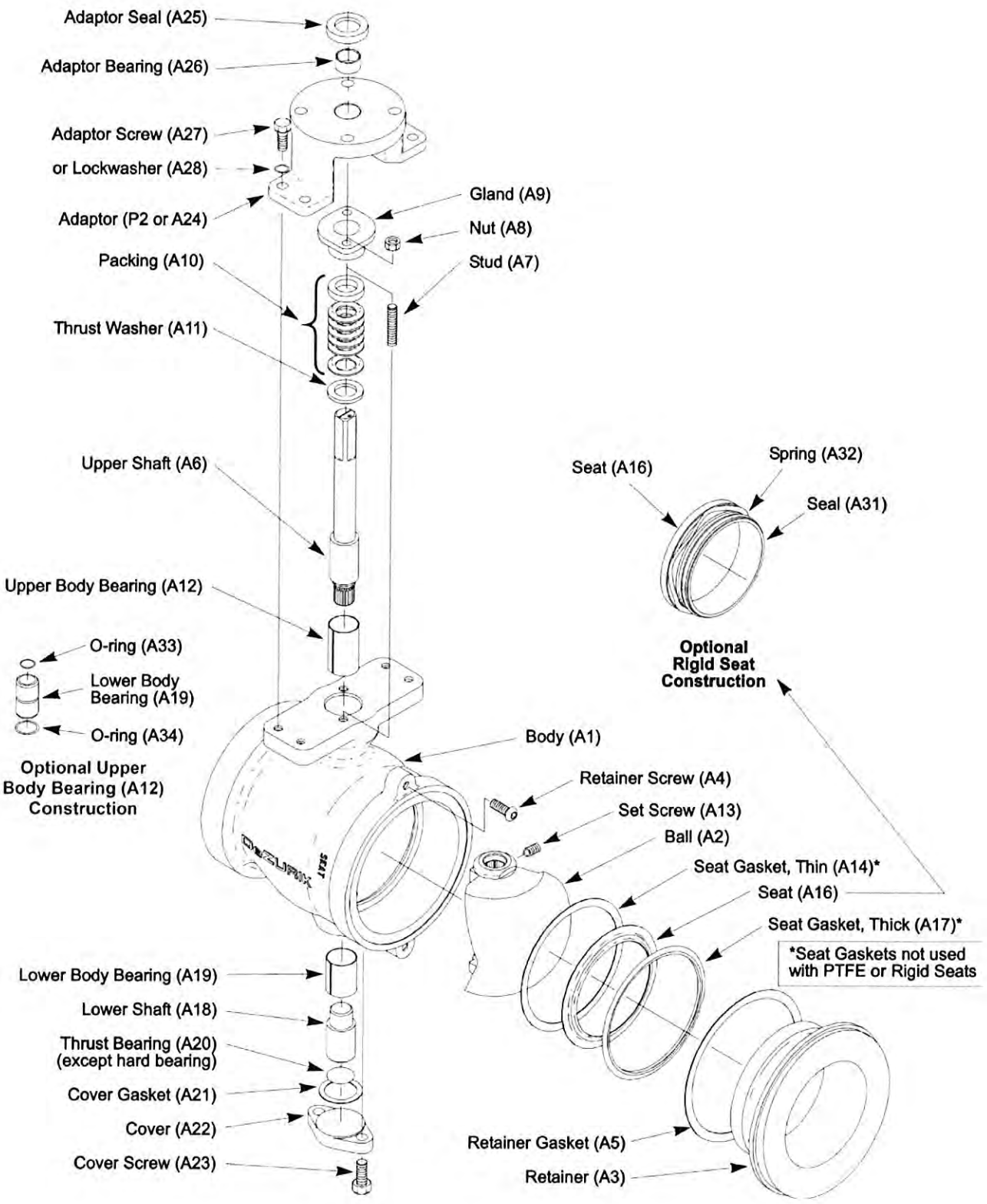

Materials of Construction

Item	Description	Order Code	Material
A1	Body	S2	316 Stainless Steel, ASTM A 351, Grade CF8M
		S3	317 Stainless Steel, ASTM A 351, Grade CG8M
		CS	Carbon Steel, ASTM A 216, Grade WCB
		HC	Hastelloy C, ASTM A 494, Grade CW2M
A2	Ball	S3NH	317 Stainless Steel, ASTM A 351, Grade CF8M, with Heat Treated Nickel Overlay
		S3S	317 Stainless Steel, ASTM A 351, Grade CF8M, with Tungsten Carbide Overlay
		HCNH	Hastelloy C, ASTM A494, Grade CW2M with Heat Treated Electroless Nickel Overlay
A3	Retainer	S2	316 Stainless Steel, ASTM A 351, Grade CF8M
		S3	317 Stainless Steel, ASTM A 351, Grade CG8M
		CS	Carbon Steel, ASTM A 216, Grade WCB
		HC	Hastelloy C, ASTM A 494, Grade CW2M
A4	Screw, Retainer	All	18-8 Stainless Steel
A5	Gasket, Retainer	All	Flexible Graphite
A6	Shaft, Upper	S10	2205 Duplex Stainless Steel
		S5	17-4 PH Stainless Steel
		HCC	Hastelloy C, ASTM B 574, Alloy N06022 Ceramic Coated
		TNC	Titanium, Ceramic Coated
A7	Stud, Packing	All	18-8 Stainless Steel
A8	Nut, Packing	All	18-8 Stainless Steel
A9	Gland	S2, CS	316 Stainless Steel, ASTM A 351, Grade CF8M
		S3	317 Stainless Steel, ASTM A 351, Grade CG8M
		HC	Hastelloy C, ASTM A 494, Grade CW2M
A10	Packing	TC	PTFE Chevron
		G2	Braided Carbon Graphite
A11	Thrust Washer	S2, CS	316 Stainless Steel, ASTM A 276, Type 316
		S3	317 Stainless Steel, ASTM A 276, Type 317
		HC	Hastelloy C, ASTM B 574 or B 575
A12	Bearing, Upper	FT	317 Stainless Steel Wire Mesh Reinforced PTFE
		HC	Hastelloy C
		SL	Cobalt Chromium Alloy
		S9	440C Stainless Steel
A13	Set Screw	S2, CS	316 Stainless Steel
		S3, HC	Alloy 20 Stainless Steel
A14	Gasket, Seat	S2, S3, HC	Flexible Graphite
A16	Seat	S3	317 Stainless Steel, Electroless Nickel Overlay, Heat Treated
		RT	Reinforced PTFE, Filled 15% Glass, 5% Molybdenum
		S3S, S3SI	317 Stainless Steel, ASTM A 351, Grade CF8M, Tungsten Carbide Overlay
		S3R, S3RI	317 Stainless Steel, ASTM A 743, Grade CG8M, Electroless Nickel Overlay, Heat Treated
		S5C	17-4 PH Stainless Steel , H1150
		HCRI	Hastelloy C, ASTM A 494, Grade CW2M, Heat Treated, Electroless Nickel Overlay
A17	Gasket, Seat	S3	317L Stainless Steel, Flexible Graphite Filled
		HC	Hastelloy C, Flexible Graphite Filled
A18	Shaft, Lower	S10	2205 Duplex Stainless Steel
		S5	17-4 PH Stainless Steel
		HCC	Hastelloy C, ASTM B 574, Alloy N06022 Ceramic Coated
		TNC	Titanium, Ceramic Coated
A19	Bearing, Lower	FT	317 Stainless Steel Wire Mesh Reinforced PTFE
		HC	Hastelloy C
		SL	Cobalt Chromium Alloy
		S9	440C Stainless Steel
A20	Bearing, Thrust	FT	PTFE Fabric Bonded to 317 SS
		FT, HC	PTFE Fabric Bonded to Hastelloy C
		SL	Graphite
A21	Gasket, Cover	All	Graphite
A22	Cover	S2	316 Stainless Steel, ASTM A 351, Grade CF8M
		S3	317 Stainless Steel, ASTM A 351, Grade CG8M
		CS	Carbon Steel, ASTM A 216, Grade WCB
		HC	Hastelloy C, ASTM A 494, Grade CW2M
A23	Screw, Cover	All	316 Stainless Steel
A24	Adaptor	All	Ductile Iron
A25	Seal, Adaptor	DR, PR	Nitrile Rubber, Carbon Steel Case
A26	Bearing, Adaptor	DR55, 85	Oil-Impregnated Bronze
A27	Screw, Adaptor	All	18-8 Stainless Steel
A28	Lockwasher, Adaptor	All	18-8 Stainless Steel
A31	Seal, O-Ring	All	Fluoro Rubber, Encapsulated in PFA
A32	Spring	All	Fluoro Rubber, Encapsulated in PFA
A33	O-ring	S9VS, SLVS, HCVS	Fluoropolymer Seal
		SLKS, HCKS	FFKM Perfluoroelastomer Seal
A34	O-ring	S9VS, SLVS, HCVS	Fluoropolymer Seal
		SLKS, HCKS	FFKM Perfluoroelastomer Seal

Valve Selection

Flow Characteristic

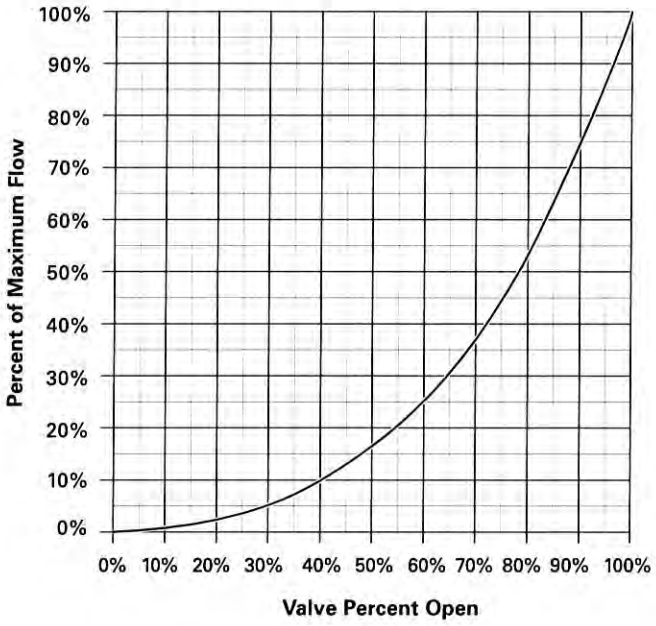

Applicable Standards

DeZURIK VPB V-Port Ball Valves are designed and/or tested to meet the following standards:	
ASME B16.10	Face-to-Face dimensions, short pattern requirements
ASME B16.34	Body Wall Thickness and Pressure/temperature ratings for Class 150 and 300 Valves
ASME B16.5	Flange dimensions conform to Pipe flanges and Flanged Fittings for Class 150 and 300
ANSI/FCI 70.2	Control valve seat leakage
EN 558-1 PN 10/16	Basic Series 3, Face-to-Face dimensions
IEC 534-3-2 F-F	Face-to-Face dimensions, Industrial Process Control Valves
ANSI/ISA-75.02	Control Valve Capacity Test Procedures
ANSI/ISA-75.08.02	Face-to-Face dimensions for Flanged and Flangeless Rotary Control Valves
ISO 5211/1 & 2	Part-turn valve actuator attachment, Part 1: Flange dimensions and Part 2: Flange and Coupling performance characteristics
ISO 5752 PN 10/16	Basic Series 3, Face-to-Face dimensions
MSS-SP-25	Data Plate and body identification conform to marking requirements

Flow Parameters

Valve Size	Cv*/Kv* 100% Open	
	Flexible Metal & Rigid Metal Seats	Reinforced PTFE & Clearance Seats
1" 25mm	36 31	40 35
1.5" 40mm	120 104	135 117
2" 50mm	210 182	235 203
2.5" 65mm	260 225	295 255
3" 80mm	360 311	420 363
4" 100mm	600 519	690 597
6" 150mm	1230 1064	1290 1116
8" 200mm	2015 1743	2190 1894
10" 250mm	3000 2595	3180 2751
12" 300mm	4225 3655	4390 3797
14" 350mm	5830 5043	6060 5242
16" 400mm	7500 6488	7770 6721
18" 450mm	9500 8218	9840 8512
20" 500mm	12000 10380	12430 10752

*Cv = Flow in GPM of water at 1 psi pressure drop.
Kv = Flow in m3/hr. of water at 100 kPa pressure drop.

Valve Weights

Valve Size	Class 150			Class 300
	Flanged (F1S & F1A)	Flangeless (W1S)	Add for Long Body (F1L)	Flanged (F2S)
1" 25mm	12 6	9 5	0.5 1	15 7
1.5" 40mm	17 8	12 6	2.0 1	24 11
2" 50mm	21 10	13 6	2.8 2	27 13
2.5" 65mm	32 15	20 10	—	40 19
3" 80mm	47 22	35 16	3.3 2	58 27
4" 100mm	63 29	42 20	3.5 2	79 36
6" 150mm	95 44	74 34	10.5 5	142 65
8" 200mm	152 69	116 53	15.3 7	208 95
10" 250mm	236 108	182 83	17.5 8	342 156
12" 300mm	368 167	314 143	11.3 6	516 235
14" 350mm	560 255	—	—	—
16" 400mm	695 316	—	—	—
18" 450mm	890 404	—	—	—
20" 500mm	1105 501	—	—	—

Pounds
Kilograms

Valve Selection

Shut-Off Capabilities

Seat type	Flow	Shut-Off Class (ANSI /FCI 70-2)
Flexible Metal*	Bi-Directional	IV
Rigid Metal	Uni-Directional	IV
Reinforced PTFE**	Uni-Directional	VI
Clearance Seat	Bi-Directional	5% of max flow when closed

NOTE: Uni-directional valves must be installed with flow-to-open (forward flow; flow into the convex side of ball). Flow-to-open is the preferred direction for bi-directional valves. Seats are rated to the full valve pressure rating unless noted below.

* Flexible metal seats are rated to 150 psi (1030kPa) pressure differential when installed in the flow-to-close direction.

** Reinforced PTFE seats are rated to 285 psi (1895 kPa) maximum shutoff pressure differential.

Pressure Ratings

Flex Metal*, Rigid Metal and Clearance Seats (S3, S3R, S35, S3RI, S3SI, HCRI)

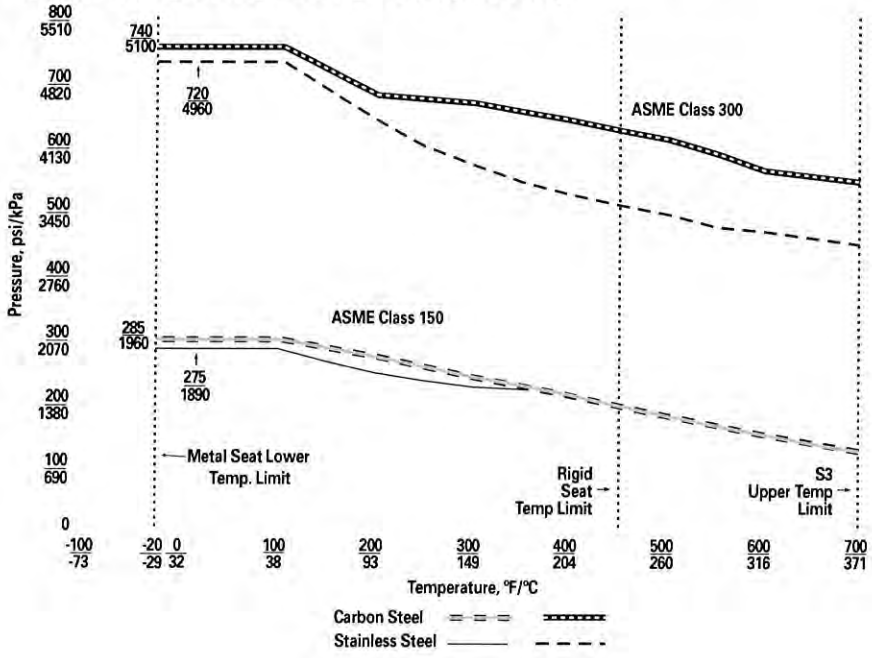

Ordering

To order, simply complete the valve order code from information shown. An ordering example is shown for your reference.

Valve Style
Give valve style code as follows:

VPB	=	V-Port Ball Valve

Valve Size
Give valve size code as follows:

1	=	1"	(25mm)	8	=	8"	(200mm)
1.5	=	1.5"	(40mm)	10	=	10"	(250mm)
2	=	2"	(50mm)	12	=	12"	(300mm)
2.5	=	2.5"	(65mm)	14	=	14"	(350mm)
3	=	3"	(80mm)	16	=	16"	(400mm)
4	=	4"	(100mm)	18	=	18"	(450mm)
6	=	6"	(150mm)	20	=	20"	(500mm)

End Connection
Give end connection code as follows:

Flangeless		
W1S	=	Class 150, ANSI/ISA-75.08.02 and IEC 534-3-2-F 1-12" valves
Flanged		
F1S	=	Class 150, ANSI/ISA-75.08.02 and IEC 534-3-2F-F 1-20" valves
F2S	=	Class 300, ANSI/ISA-75.08.02 and IEC 534-3-2F-F 1-12" valves
F1L	=	Class 150, ASME B16.10, ISO 5752 and EN 558-1 PN 10/16, 1-12" valves
F1A	=	Class 150, ASME B16.10, ISO 5752 and EN 558-1 PN 10/16 (Long body) 1-12" excluding 2.5" valve size.

Body Material
Give body material code as follows:

S3	=	317 stainless steel (Class 150 only) S3 bodies must be ordered with S3NH or S3S ball , S10 shaft and S3, S3S, S3R or RT seat.
CS	=	Carbon Steel. CS bodies must be ordered with S3NH or S3S ball, S10 shaft, and S3, S3S, S3R or RT seat.
S2	=	316 stainless steel (Class 300 only). S2 bodies must be ordered with S3NH or S3S ball, S5 or S10 shaft, and either S3, S3S, S3R or RT seat.
HC	=	Hastelloy C. HC body must be ordered with HCNH ball, HCC or TNC shaft, HCRI or RT seat, and HC, HCVS or HCKS bearings.

Packing Material
Give packing material code as follows:

TC	=	PTFE Chevron, to 500°F (260°C)
G2	=	Braided carbon graphite, to 1000°F (540°C) (Available with S3 seat and S9 or SL bearings)

Trim Combination
Give ball, shaft, seat and bearing codes as follows:

S3NH	=	317 stainless steel heat treated nickel overlay, to 700°F (370°C)
S3S	=	317 stainless steel with tungsten carbide overlay, to 1000°F (540°C) (Available with S3S, S3SI or S3 seats only)
HCNH	=	Hastelloy C with heat treated electroless nickel overlay, to 700°F (370°C)

Shaft Material

S10	=	2205 Duplex stainless steel
S5	=	17-4 PH stainless steel
HCC	=	Hastelloy C Ceramic Coated (HC Bearings only)
TNC	=	Titanium Ceramic Coated

Seat Material

RT	=	Reinforced PTFE, to 500°F (260°C)
S3	=	Flexible 317 stainless steel with heat treated electroless nickel overlay, to 700°F (370°C)
S5C	=	Clearance Seat, 17-4PH Stainless Steel to 1000°F (540°C)
S3R	=	Rigid 317 stainless steel with heat treated nickel overlay, to 450°F (230°C)
S3S	=	Rigid 317 stainless steel with tungsten carbide overlay, to 450°F (230°C) (Available with S3S Ball only)
S3RI	=	Rigid 317 stainless steel with heat treated electroless nickel overlay and nickel-chromium spring, to 450°F (230°C)
S3SI	=	Rigid 317 stainless steel with tungsten carbide overlay and nickel-chromium alloy spring, to 450°F (230°C)
HCRI	=	Rigid Hastelloy C with heat treated electroless nickel overlay and nickel-chromium alloy spring, to 450°F (230°C)

Bearing Material

FT	=	317 stainless steel wire mesh reinforced PTFE, to 500°F (260°C)
S9	=	440C stainless steel bearings, to 1000°F (540°C)
S9VS	=	440C stainless steel bearings with PFA Fluoropolymer seal to 450°F (230°C)
SL	=	Solid Cobalt-Chromium Alloy, to 1000°F (540°C)
SLVS	=	Solid Cobalt-Chromium Alloy with PFA Fluoropolymer seal, to 450°F (230°C)
SLKS	=	Solid Cobalt-Chromium Alloy with FFKM Perfluoroelastomer seal, to 550°F (288°C)

On Application

HC	=	Hastelloy C 1000°F (540°C)
HCVS	=	Hastelloy C with PFA Fluoropolymer seal, to 450°F (230°C)
HCKS	=	Hastelloy C with FFKM Perfluoroelastomer seal, to 550°F (288°C)

On Application
Give options code as follows:

BAA	=	Buy American Act
CMC	=	Certificate of Material Conformance
CRT	=	Certified Material Physical & Chemical Test Report
DTR	=	DeZURIK Standard Certified Production Hydrostatic Shell & Seat Test Report
ST3	=	Pennsylvania Steel Procurement Act
G1	=	DIN 10 or BS4504/10 Drilling (W1S, F1L & F1S only)
G2	=	DIN 16 or BS4504/16 Drilling (W1S, F1L & F1S only)
G3	=	DIN 25 or BS4504/25 Drilling (F2S only)
G4	=	DIN 40 or BS4504/40 Drilling (F2S only)
J1	=	J1S 10 Flange Drilling (F1L or F1S only)
J6	=	J1S 16 Flange Drilling (F1L or F1S only)
J2	=	J1S 20 Flange Drilling (F2S only)

On Application
Pressure Equipment Directive (CE Mark)

Ordering Example
VPB,4,F1L,S3,TC,S3NH-S10-RT-FT,G1*PR-R1A-PC4

Actuators

Manual Gear Actuators

Manual gear actuators with handwheel or chainwheel input are available in cast iron construction. They feature sintered bronze bearings on each end of the input shaft for durability and performance.



Cylinder Actuators

PowerRac® Cylinder actuators are available as double-acting or spring return. They feature a high opening torque for on-off applications and also maintain a high operating torque throughout the full stroke for modulating service.

Diaphragm Actuators

Diaphragm actuators may be specified also. They're available with 40, 55, 85, 125, 145 and 250 square inch (0.026m², 0.036m², 0.055m², 0.094m², 0.161m²) sizes and with 20, 35 or 60 psi (140, 240 or 410 kPa) spring options.

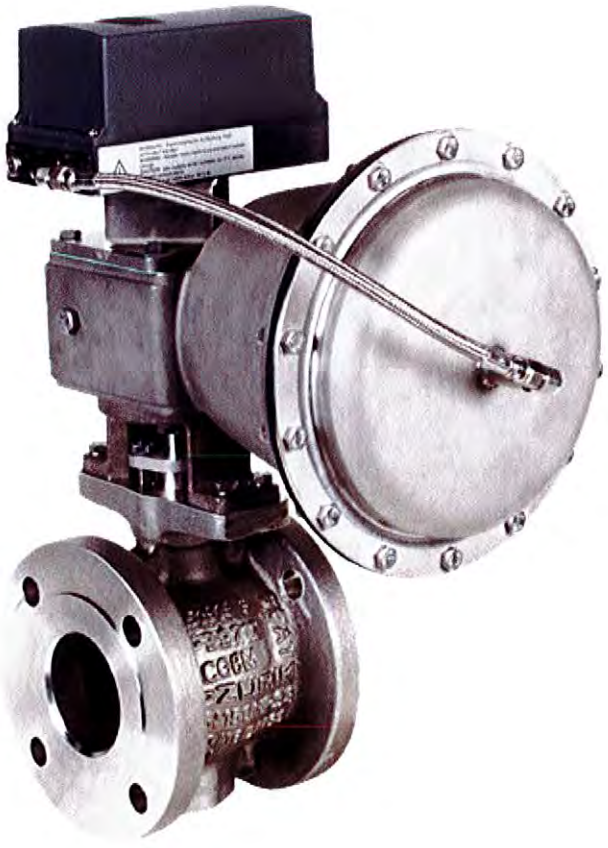

Dimensions

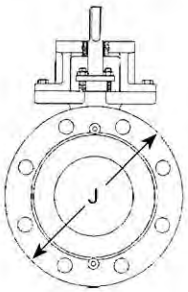

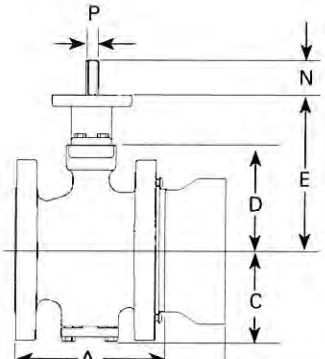

ANSI/ISA, IEC (W1S)(F1S)(F2S)

A

ASME, ISO, EN (F1L)

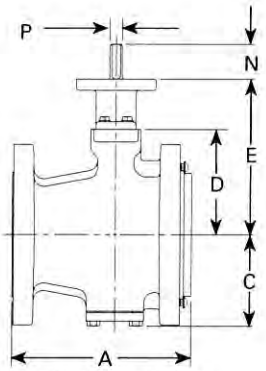

ASME, ISO, EN (F1A)

Basic Valve

Inches
Millimeters

Valve Size	A		C	D	E	J			N	P Diameter	P Square
	ANSI/ISA IEC	ASME ISO EN				Flanged Class 150	Flangeless Class 150	Flanged Class 300			
1" 25mm	4.00 102	5.00 127	2.75 70	3.25 83	5.62 143	4.25 108	2.44 62	4.88 124	1.75 44	.62 16	.50 13
1.5" 40mm	4.50 114	6.50 165	2.94 75	3.47 88	5.84 148	5.00 127	3.06 78	6.12 155	1.75 44	.62 16	.50 13
2" 50mm	4.88 124	7.00 178	3.22 82	3.75 95	6.12 155	6.00 152	3.81 97	6.50 165	1.75 44	.62 16	.50 13
2.5" 65mm	5.50 140	7.50 191	3.75 95	4.44 113	6.94 176	7.00 178	4.38 111	7.50 190	1.75 44	.75 19	.62 16
3" 80mm	6.50 165	8.00 203	4.00 102	4.69 119	7.19 183	7.50 191	5.19 132	8.25 210	1.75 44	.75 19	.62 16
4" 100mm	7.62 194	9.00 229	4.56 116	5.25 133	7.75 197	9.00 229	6.38 162	10.00 254	1.75 44	.75 19	.62 16
6" 150mm	9.00 229	10.50 267	5.72 145	6.50 165	9.50 241	11.00 279	8.50 216	12.50 317	1.75 44	1.25 32	.94* 24
8" 200mm	9.56 243	11.50 292	7.28 185	8.12 206	11.12 282	13.50 343	10.62 270	15.00 381	1.75 44	1.50 38	1.19 30
10" 250mm	11.69 297	13.00 330	8.91 226	9.50 241	13.38 340	16.00 406	13.12 333	17.50 444	1.75 44	2.00 51	1.62** 41
12" 300mm	13.31 338	14.00 356	9.91 252	10.50 267	14.38 365	19.00 483	15.38 391	20.50 521	1.75 44	2.00 51	1.62 41
14" 350mm	15.75 400	—	10.86 276	11.47 291	15.34 390	21.00 533	—	—	1.75 44	2.00 51	1.62 41
16" 400mm	15.75 400	—	13.25 337	14.06 375	18.56 471	23.50 597	—	—	1.75 44	2.50 64	1.81 46
18" 450mm	18.00 457	—	14.44 367	15.25 387	19.75 502	25.00 635	—	—	1.75 44	2.50 64	1.81 46
20" 500mm	20.00 508	—	15.56 395	16.38 416	20.38 518	27.50 686	—	—	1.75 44	2.50 64	1.81 46

Note: All dimensions are subject to change without notice.
Request certified drawings for use in preparing piping layouts.

*6" (150mm) $\frac{.88}{22}$ for DR-40 actuators

**10" (250mm) $\frac{1.19}{30}$ for DR-85 actuators

Sales and Service

For information about our worldwide locations, approvals, certifications and local representative:
Web Site: www.dezurik.com E-Mail: info@dezurik.com

DeZURIK
APCO | HILTON

250 Riverside Ave. N. Sartell, Minnesota 56377 • Phone: 320-259-2000 • Fax: 320-259-2227

DeZURIK, Inc. reserves the right to incorporate our latest design and material changes without notice or obligation. Design features, materials of construction and dimensional data, as described in this bulletin, are provided for your information only and should not be relied upon unless confirmed in writing by DeZURIK, Inc. Certified drawings are available upon request.

Printed in the U.S.A.

Curve number	Pump performance curves	SULZER
Reference curve XFP 255J-CB2 60 HZ	**XFP 255J-CB2 60 HZ**	

					Discharge	Frequency
					DN250	60 Hz
Density	Viscosity	Test Standard			Rated speed	Date
998.2 kg/m³	1 mm²/s	ISO9906:2012,HI 11.6/14.6 Gr2B			1189 1/min	2022-05-27
Flow	Head	Shaft power	Power input	Rated power P2	Hyd. efficiency	NPSH
3355 US g.p.m	27 ft	24.2 kW	25.8 kW	35 kW	70.6 %	15.8 ft

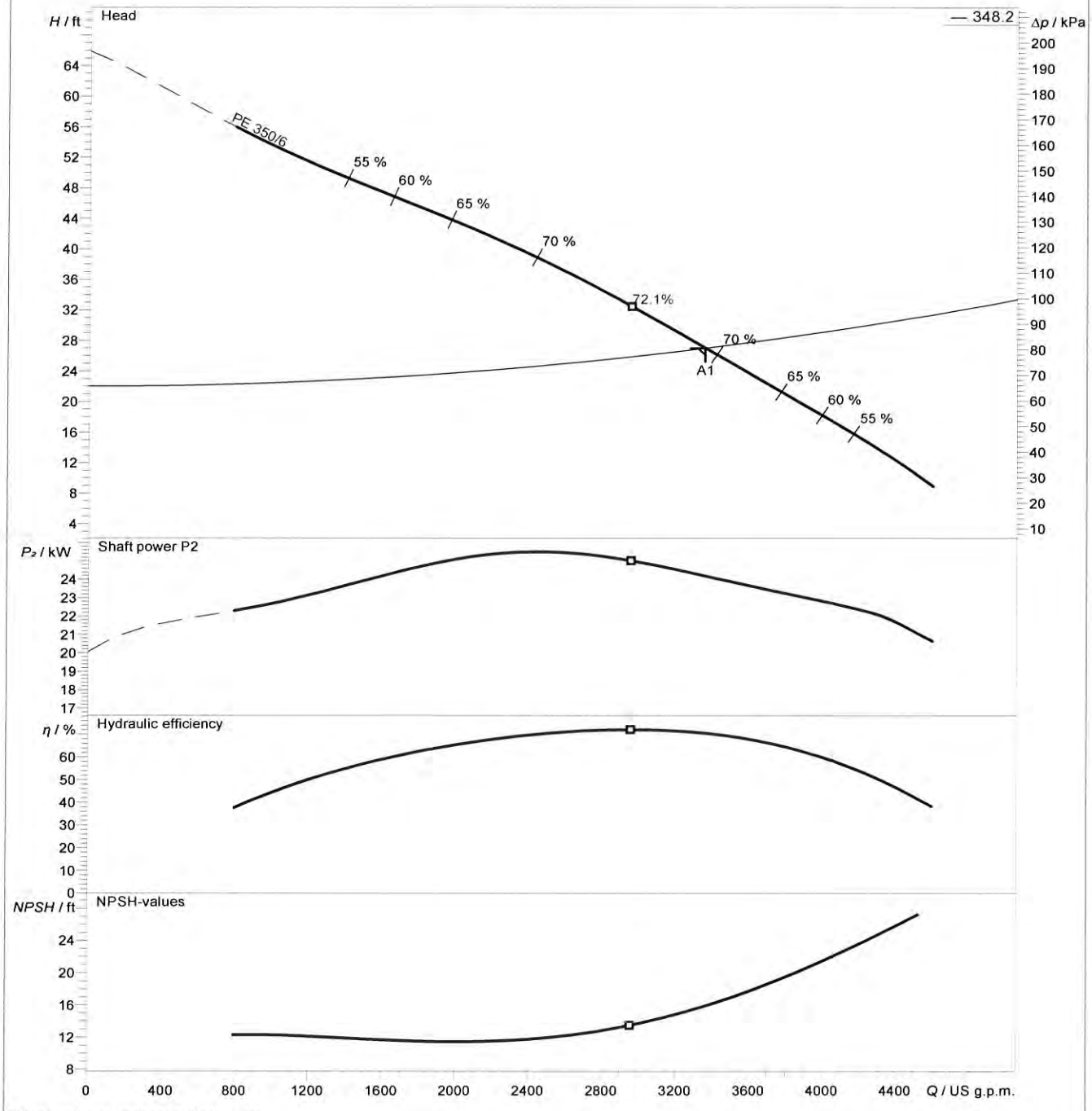

Wet well vertical installation 2"

Impeller size	N° of vanes	Impeller	Solid size	Revision
348.2 mm	2	Contrablock Plus impeller	90 x 120 mm	

Sulzer reserves the right to change any data and dimensions without prior notice
and can not be held responsible for the use of information contained in this software.

Frequency	PE4
60 Hz	

Motor performance curve

PE 350/6

SULZER

Rated power	Service factor	Nominal Speed	Number of poles	Rated voltage	Date
35 kW	1.3	1180 1/min	6	480 V	2022-05-27

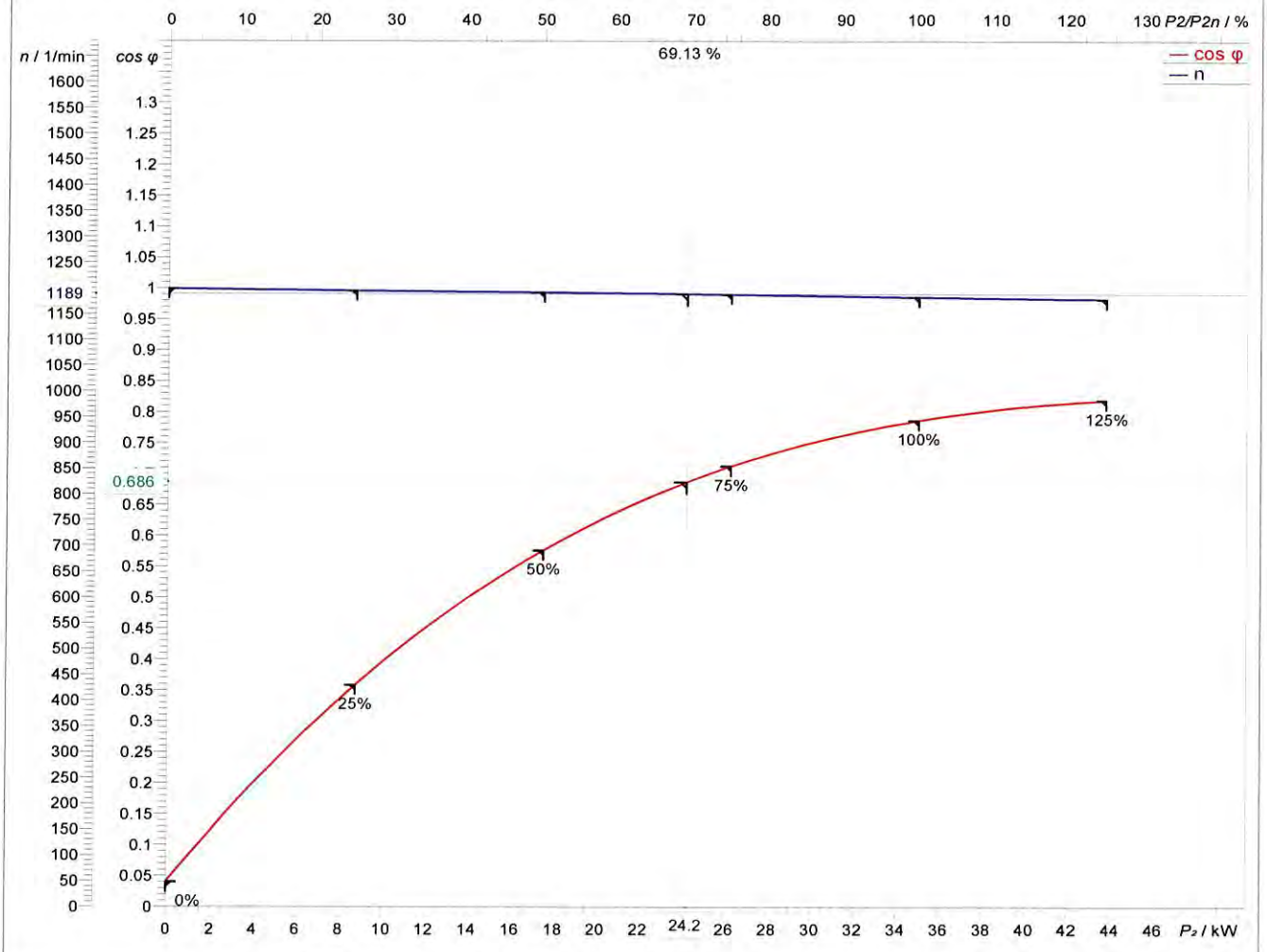

Symbol	No load	25 %	50 %	75 %	100 %	125 %
P_2 / kW	0	8.75	17.5	26.25	35	43.75
P_1 / kW	0.9475	9.82	18.78	27.93	37.2	46.71
I / A	28.5	32.99	39.23	47.17	56.9	68.6
cos φ	0.03999	0.3581	0.5759	0.7121	0.7864	0.819
n / 1/min	1199	1195	1192	1188	1183	1179
s / %	0.08333	0.4167	0.6667	1	1.417	1.75
M / Nm	0	69.92	140.2	211	282.5	354.4
η / %	0	89.1	93.19	93.98	94.07	93.66

Tolerance according toVDE 0530 T1 12.84or rated power

Starting current	Starting torque	Moment of inertia	No. starts per hour
410 A	791 Nm	0.574 kg m²	15

Sulzer reserves the right to change any data and dimensions without prior notice
and can not be held responsible for the use of information contained in this software.

Spaix® 5-2021.3 - 2022/03/07 (Build 439), 32 bit
Data version Feb 2022

Submersible Sewage Pump Type ABS XFP

XFP 255J-CB2 | 10", 6 Pole, 3-Phase, 60 Hz, PE4

Submersible Motor Specifications, PE4 Frame

Motor Design			NEMA design B, squirrel cage induction
Motor Type			Fully enclosed Premium Efficiency submersible, IP68 protection rating
Motor Efficiency Standard and Rating			IEC 60034-30, IE3 rating
Motor Efficiency Test Protocol			IEC 60034-2-1
Insulation Material			Class H, 180°C (356°F), copper windings
Motor Filling Medium			Air
Temperature Rise			Class A
Maximum Fluid Temperature			40°C (104°F) continuous, 50°C (122°F) intermittent
Cooling System		OPT	Closed-loop, non-toxic glycol/water mixture (⅓ / ⅔)
Motor Protection	Thermal	STD	Normally closed bimetallic switch in each phase, connected in series, 140°C (284°F) +/- 5°C (41°F) opening temperature
		OPT	STD plus: upper and lower bearing bimetallic switches **or** 100Ω RTD (PT100) in winding (option of one RTD or three RTDs in stator) and RTDs in lieu of upper and lower bearing bimetallic switches
	Leakage	STD	Moisture detection probe in seal sensing chamber (for use with appropriate relay)
		OPT	STD plus: probes in motor housing and junction chamber
Sensing Chamber Filling Medium			Oil
Bearing Type	Upper		Cylindrical roller, permanently lubricated
	Lower		Dual angular contact ball bearings plus single cylindrical roller bearing, permanently lubricated
Motor Starter Types			Suitable for use with electronic soft starters, and PWM type Variable Frequency Drives [1]
Maximum Starts per Hour			10 evenly spaced w/ soft starters; N/A with PWM type VFDs
Inverter Duty Rating			Motors meet NEMA MG1, part 31 requirements
Maximum Submergence			20 meters (65 feet)
Available Voltages			230, 460, 600 (consult factory for other voltages)
Voltage Tolerance from Rated			+/-10%
Agency Approvals			Factory Mutual, CSA
Explosion Proof Rating			NEC 500 Class 1, Division 1, Group C & D, Class T3C max surface temp

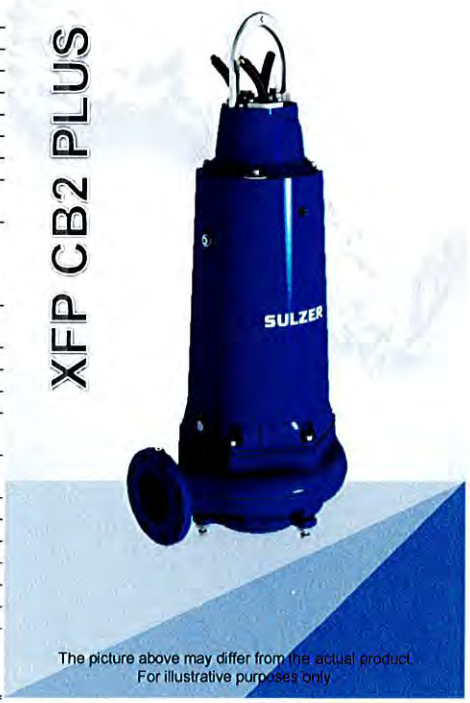

The picture above may differ from the actual product. For illustrative purposes only.

[1] Output filters may be required on VFDs. See document **DS-E00-001** for details.

Motor Ratings, PE4 Frame

Motor Model	Input Power (P1)	Rated Power Output (P2)	Nominal RPM	Rated Voltage	Full Load Amps	Locked Rotor Amps	NEMA Code Letter	NEMA Service Factor	Motor Efficiency at % Load			Power Factor at % Load		
									100	75	50	100	75	50
PE 210/6	22.6 kW	21 kW 28 HP	1184	230	69.9	461	H	1.3	93.0	92.9	91.7	.811	.752	.628
				460	35.0	231								
				600	26.8	177								
PE 250/6	26.9 kW	25 kW 33.5 HP	1186	230	85.0	638	J	1.3	93.0	92.5	90.9	.794	.727	.597
				460	42.5	319								
				600	32.6	245								
PE 350/6	37.2 kW	35 kW 47 HP	1183	230	118.8	855	J	1.3	94.1	94.0	93.2	.786	.712	.576
				460	59.4	428								
				600	45.5	328								
PE 430/6	45.7 kW	43 kW 58 HP	1180	230	141.7	921	H	1.3	94.2	94.4	93.8	.808	.744	.614
				460	70.9	461								
				600	54.3	353								

DS-E02-157 REV: 1 DATE: 10/16 Specifications Subject to Change Without Notice

Scan For More Info

© Sulzer

Submersible Sewage Pump Type ABS XFP

XFP 255J-CB2 | 10", 6 Pole, 3-Phase, 60 Hz, PE4

Cable Data, PE4 Frame

	Motor	Motor Voltage	Cable Qty	Cable Type	Cable Nominal Outside Diameter +/- .5mm (.02")	
					Power	Ground
Power Cable	PE 210/6	230	1	G-GC 4-3	30.2mm (1.19")	Integrated w/ Power
		460	1	G-GC 8-3	24.6mm (0.97")	Integrated w/ Power
		600	1	G-GC 8-3	24.6mm (0.97")	Integrated w/ Power
	PE 250/6	230	1	G-GC 2-3	34.0mm (1.34")	Integrated w/ Power
		460	1	G-GC 8-3	24.6mm (0.97")	Integrated w/ Power
		600	1	G-GC 8-3	24.6mm (0.97")	Integrated w/ Power
	PE 350/6	230	2	G-GC 4-3	30.2mm (1.19")	Integrated w/ Power
		460	1	G-GC 6-3	26.7mm (1.05")	Integrated w/ Power
		600	1	G-GC 8-3	24.6mm (0.97")	Integrated w/ Power
	PE 430/6	230	2	G-GC 4-3	30.2mm (1.19")	Integrated w/ Power
		460	1	G-GC 4-3	30.2mm (1.19")	Integrated w/ Power
		600	1	G-GC 6-3	26.7mm (1.05")	Integrated w/ Power

	Motor Monitoring Type [3]	Cable Qty	Cable Type	Cable Nominal Outside Diameter +/- .5mm (.02")
Control Cable	Std monitoring	1	SOOW 16/4	10.6mm (0.42")
	Opt full monitoring	1	SOOW 16/8	14.2mm (0.56")
	Opt full monitoring w/ 3 RTDs	1	SOOW 16/12	17.7mm (0.70")
	Opt full monitoring w/ 5 RTDs	2	SOOW 16/10	17.2mm (0.68")
Cable Length	Standard: 15m (49 feet)	Optional: 20m (65 feet), 30m (98 feet); Consult Factory for longer lengths		

[3] See motor protection on page 1. Optional full monitoring systems with RTD options do not include bearing bi-metallic switches.

Pump Data

Discharge Size	10" flanged, compatible with 10" class 125 ANSI flanges									
Suction Size (Wet-Pit / Dry-Pit) [5]	10" undrilled / 10" flanged, compatible with 10" class 125 ANSI flanges, threaded for 12x7/8-9 UNC screws, 30mm (1.2") deep									
Volute Pressure Rating	10 bar (145 psi)									
Impeller Type	Semi-open, 2-vane, Contrablock Plus, w/ Seal Protection System									
Impeller Code	-	-	-	-	-	-				
Impeller Diameter, mm (in.)	340 (13.4)	350 (13.8)	360 (14.2)	370 (14.6)	380 (15.0)	390 (15.4)				
Solids Passage Size, mm (in.)	90x120 (3.5x4.7)	90x120 (3.5x4.7)	90x120 (3.5x4.7)	90x120 (3.5x4.7)	90x120 (3.5x4.7)	90x120 (3.5x4.7)				
Min. Recommended Flow, GPM [6]	1400	1500	1500	1600	1700	1900				

[5] Wet-pit version can be drilled to dry-pit specifications upon request. Consult factory for details. [6] Recommend minimum continuous flow. Consult factory for applications below this flow rate.

Materials of Construction

		Standard	Optional
Power/Control Cable Jacket		Chlorinated Polyethylene (CPE)	
Lifting Hoop		Ductile Iron EN-GJS-400-18 (ASTM A-536; 60-40-18)	Duplex Stainless Steel 1.4470 (ASTM A890, CD3MN Grade 4A)
Cable Connection Chamber		Cast Iron EN-GJL-250 (ASTM A-48, Class 35B)	
Motor Housing		Cast Iron EN-GJL-250 (ASTM A-48, Class 35B)	
Cooling Jacket		Steel 1.0036 (ASTM A-570, Grade D)	
Intermediate Housing		Cast Iron EN-GJL-250 (ASTM A-48, Class 35B)	
Seal Plate/Cooling Chamber		Cast Iron EN-GJL-250 (ASTM A-48, Class 35B)	
Pump and Motor Shaft		Stainless Steel 1.4021 (AISI 420)	Duplex Stainless Steel 1.4462 (UNS S31803)
Impeller		Cast Iron EN-GJL-250 (ASTM A-48, Class 35B) [7]	Duplex Stainless Steel 1.4470 (ASTM A890, CD3MN Grade 4A)
Wear Parts	Impeller Wear Ring	N/A	
	Volute Wear Ring	N/A	
	Bottom/Wear Plate	Cast Iron EN-GJL-250 (ASTM A-48, Class 35B) [7]	Duplex Stainless Steel 1.4470 (ASTM A890, CD3MN Grade 4A)
Volute		Cast Iron EN-GJL-250 (ASTM A-48, Class 35B)	Duplex Stainless Steel 1.4470 (ASTM A890, CD3MN Grade 4A)
External Hardware		Stainless Steel 1.4401 (AISI 316)	
O-Rings and Cable Glands		Nitrile (Buna-N)	Viton®
Mechanical Seals	Lower	Silicon Carbide / Silicon Carbide, Nitrile, 316 SS	Silicon Carbide / Silicon Carbide, Viton®, 316 SS
	Upper	Silicon Carbide / Silicon Carbide, Nitrile, 316 SS	
Lower Bearing Lip Seal		Nitrile (Buna-N)	
Coating/Protection		Two-part epoxy, blue, 120µm (4.7 mil) DFT	Two-part epoxy, blue, 400µm (15.7 mil); Wet-end liquid ceramic coating, 500µm (19.7 mil); Zinc Anodes

[7] Hardening of bottom edge of impeller vane and wear plate surface available. Consult factory for details.

General Data (Standard Materials of Construction & Cable Length)

	PE 210/6	PE 250/6	PE 350/6	PE 430/6		
Overall Height	1503mm (59.2")	1503mm (59.2")	1583mm (62.3")	1583mm (62.3")		
≈ Pump Weight (Non-Cooled)	805 kg (1775 lb)	845 kg (1863 lb)	895 kg (1973 lb)	905 kg (1996 lb)		

DS-E02-157 REV: 1 DATE: 10/16 Specifications Subject to Change Without Notice

© Sulzer

Scan For More Info

No: M-02.3016 - 03	2
Dat/Nam.: 18.04.2016 / K. Srb	
Cad Code: M_023016	
Technical changes reserved Änderungen vorbehalten Sous réserve de modifications	

XFP 255J-CB2

Dimension sheet PE4 WET WELL Installation

Maßblatt PE4 Nassinstallation

Plan d'encombrement PE4 installation submersible

SULZER

Type Typ Type 50Hz	Type Typ Type 60Hz	Weight Gewicht Poids OK		Weight Gewicht Poids MK		H		Size
		(~kg)	(~lb)	(~kg)	(~lb)	(mm)	(inch)	
PE 220/4-J		800	1764	840	1852	1503	59.2	A
PE 300/4-J		835	1841	875	1929			
PE 370/4-J		870	1918	915	2018	1583	62.3	B
PE 450/4-J		900	1985	945	2084			
PE 185/6-J	PE 210/6-J-60	805	1775	845	1863	1503	59.2	A
PE 220/6-J	PE 250/6-J-60	845	1863	885	1951			
PE 300/6-J	PE 350/6-J-60	895	1973	940	2073	1583	62.3	B
PE 370/6-J	PE 430/6-J-60	905	1996	950	2095			

Weight: Includes pump, slider bracket and 10m cable
Gewicht: Beinhaltet Pumpe, Halterung und 10m Kabel
Poids: Pompe, coulisseau et 10m de câble

For different cable length see IOM, chapter 1.5
Für abweichende Kabellänge siehe EBA, Kapitel 1.5
Pour des longueurs supérieures, voir la section 1.5 du manuel

For hex.-woodscrew 0,4*2,8 plug 0,5 DIA
Für Skt.-Holzschr.10*70 Dübel Ø12mm
Pour vis à bois hexagonale 10*70 trou de 12mm

Installation instructions "pedestal" 1 597 2507
Installationsanweisung "Fußstück" 1 597 2507
Instruction d'installation du "pied d'assise" 1 597 2507

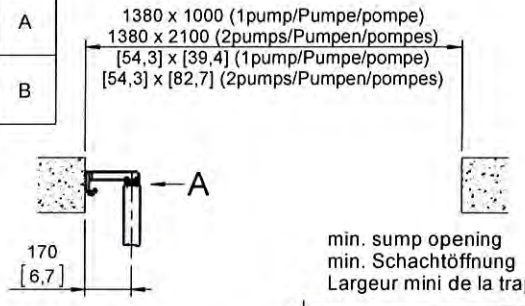

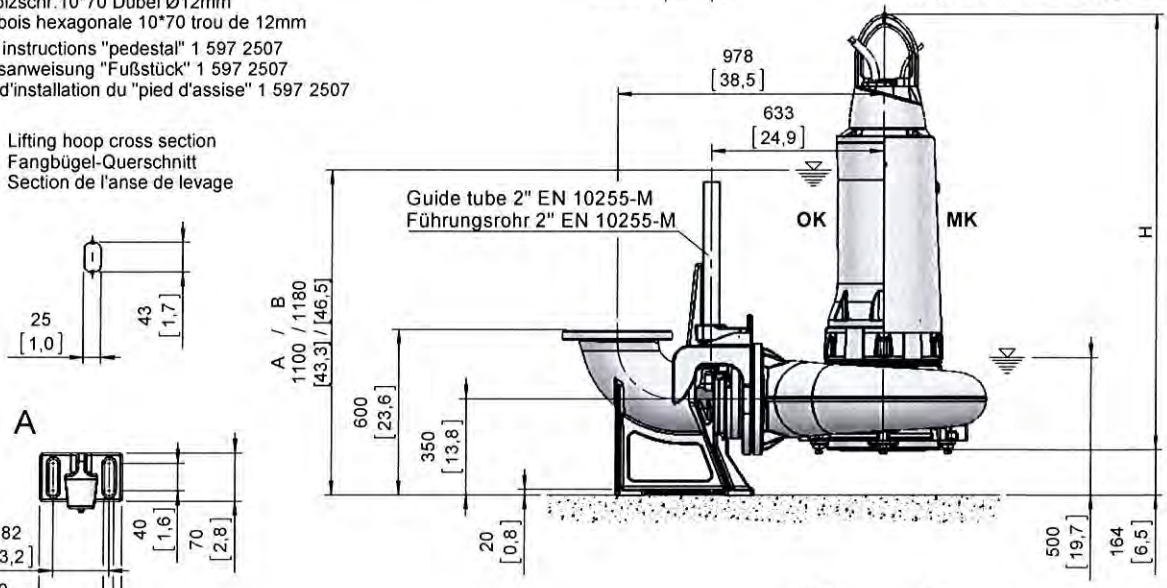

Lifting hoop cross section
Fangbügel-Querschnitt
Section de l'anse de levage

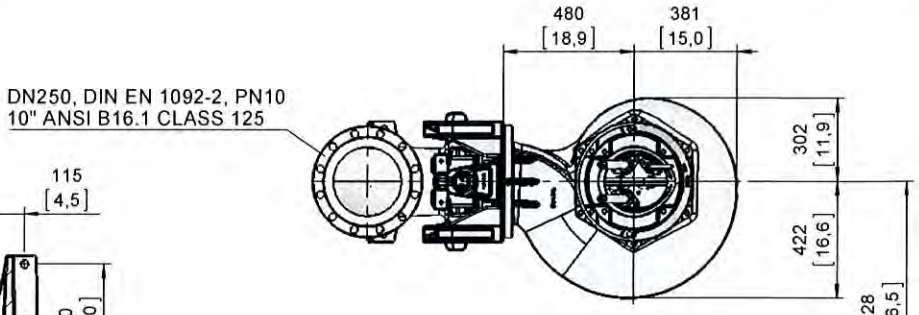

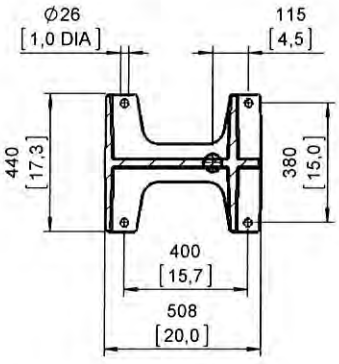

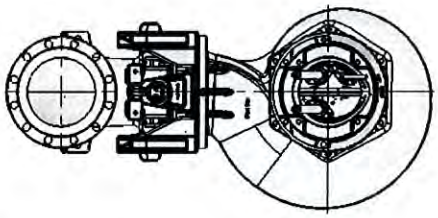

[mm / [inch]]

OK = Ohne Kühlmantel
Without cooling jacket
Sans enveloppe de refroidissement

MK = Mit Kühlmantel
With cooling jacket
Avec enveloppe de refroidissement

SULZER

Scope of Supply

Customer	SUEZ Water Technologies & Solutions Canada	Sulzer Reference ID	CAN.7444-YYZ.22.7444-B0
Project Name		Inquiry Date	
Inquiry Number/ID		Bid Submitted Date	
Item number	001	Date Last Saved	30 May 2022 1:52 PM
Application	Municipal Wastewater Treatment - 14112	Type / Size / Stages	APT52-16 (O) / 1
Pump speed	590 rpm		

Pump and Accessories

Qty	Description
1	*APT52-16 (O)*
	End suction single stage centrifugal pump
	Quality Requirement
	CE 2006/42/EC
	EN ISO 5199:2002 Class II
	Pump and accessories
	Hydraulic performance acceptance grade
	ISO 9906:2012 / HI 14.6-2011 Grade 2B
	Guaranteed efficiency
	Impeller
	Impeller type: Open
	Impeller holes: Balance holes
	Materials of construction
1	Volute case : Grey cast iron (ASTM A48 CL35B)
	Impeller : Duplex steel (ASTM A890 3A)
	Wetted non casted alloys: 316 SS or better grade
	Shaft: Duplex steel (EN1.4460 / AISI 329 / SS2324)
	Bearing housing : Grey cast iron (ASTM A48 CL30B)
	Surface treatment
	Inside surface treatment: Standard
	Painting method: Standard, atmospheric-corrosivity C4, ISO 12944-2
	Color shade: Light grey (NCS1700)
	Volute case
	Flange drilling : ASME B16.1 CLASS 125
	Casing Connections
	Casing Drain
	Recirculation Pipe (Discharge)
	Shaft seal
	Sealing unit type: Cartridge single, open seal chamber, sleeve installation (MS33)
	Shaft seal fluid: Without fluid (N)
1	Mechanical seal type: John Crane, 5610 (FC16)
	Mechanical seal body: 316/329 SS
	Shaft seal material: SiC/ SiC
	Mechanical seal elastomer material: EPDM, Ethylene propylene
	Bearing unit
	Bearing lubrication type: Oil bath
	Bearing isolation: Standard labyrinth seal
	Other parts
	O-ring material: EPDM, Ethylene propylene
	Shaft seal guards material: Stainless steel
	Coupling
1	Coupling size : Rex Omega ES
1	Coupling guard : Painted galvanized steel
	Coupling guard colour shade: Yellow (RAL1023)

© Sulzer Ltd 2022

Pump and Accessories

Qty	Description
	Baseplate
1	Baseplate type: Standard baseplate for pump and motor (SLP)
	Baseplate material: Carbon steel
	Baseplate surface treatment: Hot galvanizing
	Packing
	Packing type: Standard domestic packaging (wooden skid)
	Product protection
	Plug for connections
	Board cover for flanges

Driver

Qty	Description
	Motor
	Motor standard:
1	Motor detail: Severe Duty 590RPM 40HP TEFC T 460V CI FOOT-mounted

© Sulzer Ltd 2022

SULZER

Pump Performance Datasheet

Customer	: SUEZ Water Technologies & Solutions Canada	Sulzer Reference ID	: CAN.7444-YYZ.22.7444-B0
Inquiry Number/ID	:	Type / Size	: APT52-16 (O)
Item number	: 001	Stages	: 1
Service	: RAS PUMP	Based on curve number	: APP52-400_720_O Rev 2
Quantity	: 1	Date of Last Update	: 30 May 2022 1:52 PM

Operating Conditions

Flow, rated	: 5,729.0 USgpm
Differential head / pressure, rated (requested)	: 15.00 ft
Suction pressure, rated / max	: 0.00 / 0.00 bar.g
NPSH available, rated	: Ample
Site Supply Frequency	: 60 Hz

Performance

Speed criteria	: Synchronous
Speed, rated	: 590 rpm
Impeller diameter, rated	: 460 mm
Impeller diameter, maximum	: 533 mm
Impeller diameter, minimum	: 450 mm
Efficiency	: 81.34 %
NPSH (3% head drop) / margin required	: 3.78 / 0.00 m
Ns (imp. eye flow) / Nss (imp. eye flow)	: 3,670 / 8,199 US Units
MCSF	: 2,112.3 USgpm
Head, maximum, rated diameter	: 25.74 ft
Head rise to shutoff	: 71.52 %
Flow, best eff. point	: 4,951.9 USgpm
Flow ratio, rated / BEP	: 115.69 %
Diameter ratio (rated / max)	: 86.30 %
Head ratio (rated dia / max dia)	: 47.56 %
Cq/Ch/Ce/Cn [ANSI/HI 9.6.7-2010]	: 1.00 / 1.00 / 1.00 / 1.00
Selection status	: Acceptable

Liquid

Liquid type	: Water
Additional liquid description	:
Solids diameter, max	: 0.00 mm
Solids concentration, by volume	: 0.00 %
Temperature, rated / max	: 20.00 / 20.00 deg C
Fluid density, rated / max	: 0.998 / 0.998 kg/dm3
Viscosity, rated	: 1.00 cSt
Vapor pressure, rated	: 0.02 bar.a

Material

Material selected	: Cast Iron - ASTM A48 CL35B (53 / F0067)

Pressure Data

Maximum casing/bowl working pressure	: 0.77 bar.g
Maximum allowable working pressure	: 10.00 bar.g
Maximum allowable suction pressure	: N/A
Hydrostatic test pressure	: 15.00 bar.g

Driver & Power Data (@Max density)

Driver sizing specification	: Rated power
Margin over specification	: 0.00 %
Service factor	: 1.00
Power, hydraulic	: 21.70 hp
Power, rated	: 26.68 hp
Power, maximum, rated diameter	: 27.78 hp
Minimum recommended motor rating	: 40.00 hp / 29.83 kW

Hydraulic Performance Acceptance Test: ISO 9906:2012 / HI 14.6-2011 Grade 2B

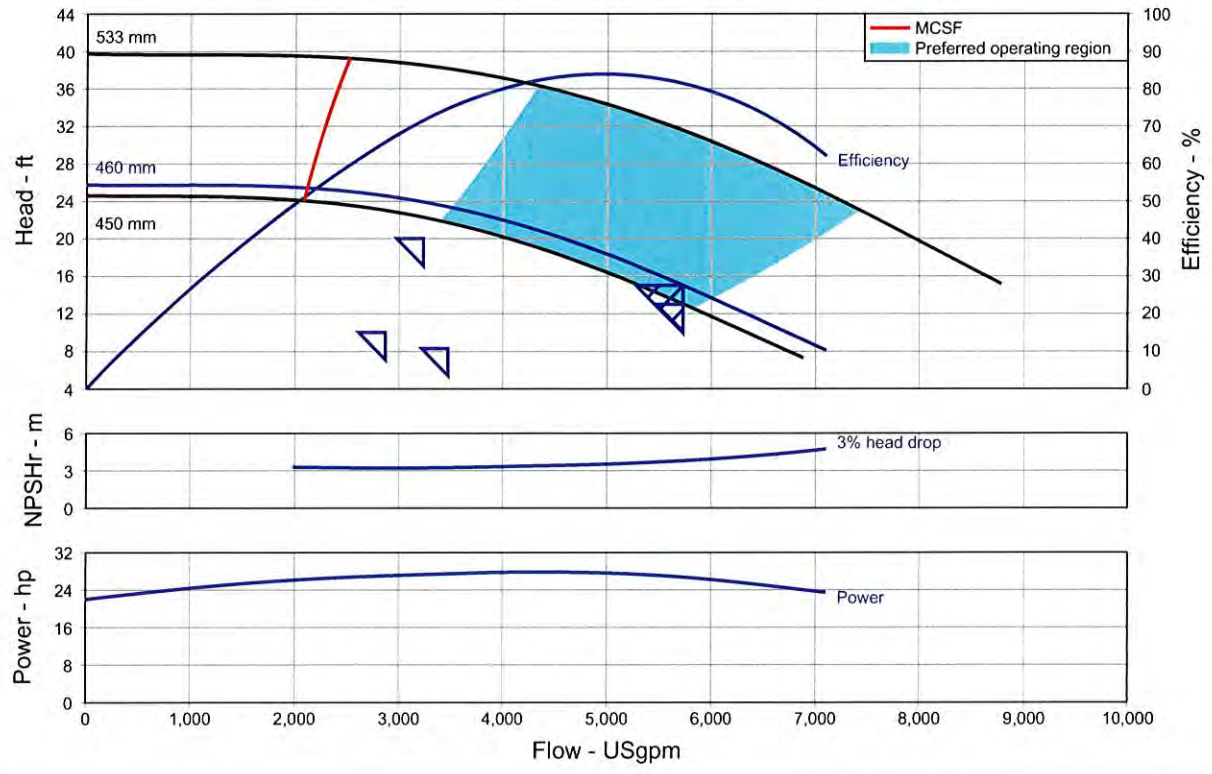

© Sulzer Ltd 2022

Multi-Speed Performance Curve

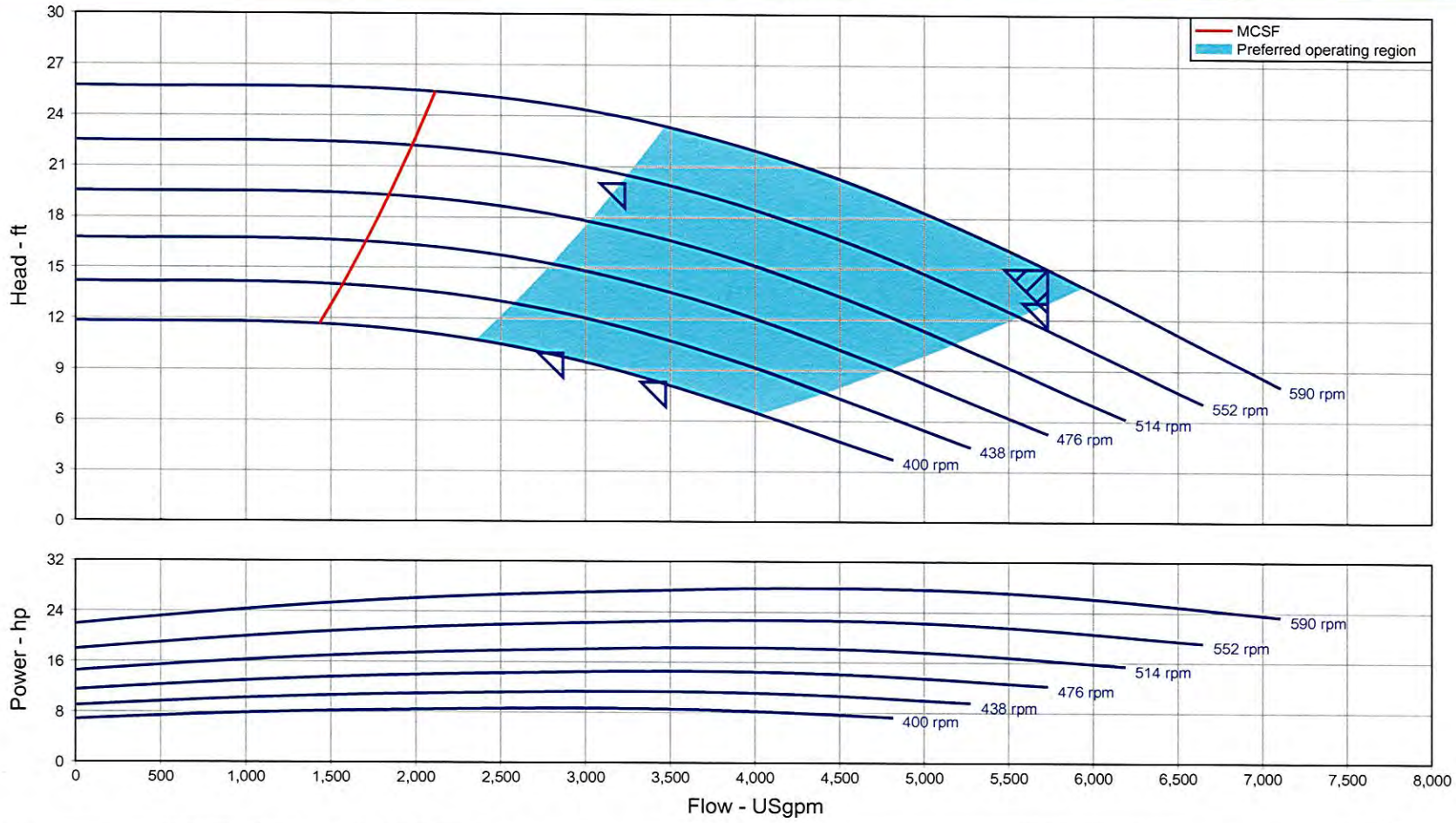

Customer	: SUEZ Water Technologies & Solutions Canada	Stages	: 1	Nominal speed	: 590 rpm
Inquiry Number/ID	:	Based on curve number	: APP52-400_720_O Rev 2	Flow, rated	: 5,729.0 USgpm
Item number	: 001	Efficiency	: 81.34 %	Differential head / pressure, rated	: 15.00 ft
Service	: RAS PUMP	Power, rated	: 26.68 hp	Speed, rated	: 590 rpm
Quantity	: 1	NPSH (3% head drop)	: 3.78 m	Impeller diameter, rated	: 460 mm
Sulzer Reference ID	: CAN.7444-YYZ.22.7444-B0	Site Supply Frequency	: 60 Hz	Fluid density, rated / max	: 0.998 / 0.998 kg/dm3
Date of Last Update	: 30 May 2022 1:52 PM			Viscosity, rated	: 1.00 cSt
Type / Size	: APT52-16 (O)			Cq/Ch/Ce/Cn [ANSI/HI 9.6.7-2010]	: 1.00 / 1.00 / 1.00 / 1.00

© Sulzer Ltd 2022

DIMENSIONAL DATA –AHLSTAR
General Arrangement – Pump + Motor + Baseplate – US Units

SPP id: Version 04 > / 120601 / Replaces 981115 / en / **P20045** / 2

Product scope: Assembly (ASSE.0)
Pump type and size: APT52-16
Motor standard: NEMA motor, NEMA

Drive type: Direct drive, DD
Baseplate type: Baseplate for pump and motor, SLP
Pump mounting size: 56

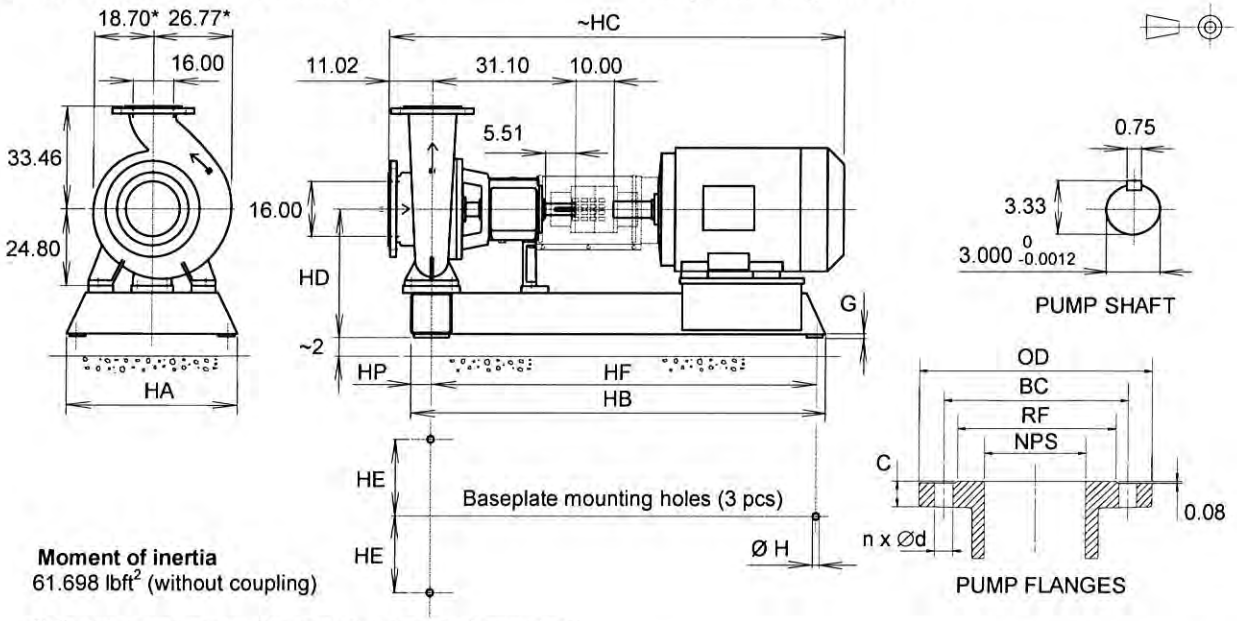

Moment of inertia
61.698 lbft^2 (without coupling)

*) If sealing unit type = Air separating pump, please check the dimensions from bare pump dimensional drawing.

Dimensions in inches

DIMENSIONS													
Primary motor frame	Max motor frame (1	(2	Baseplate	HD	HC	HB	HP	HF	HA	HE	H	G	Weight lbs (3
445T	509LL	449T	12	36.50	97.00	106.25	5.00	99.00	52.75	24.00	1.50	0.69	3020
447T	5011LL	449T	12	36.50	100.00	106.25	5.00	99.00	52.75	24.00	1.50	0.69	3110
447TS	509LS	449TS	12	36.50	98.00	106.25	5.00	99.00	52.75	24.00	1.50	0.69	3020
449T	5011LL	-	12	36.50	106.00	106.25	5.00	99.00	52.75	24.00	1.50	0.69	3110
449TS	509LS	-	12	36.50	103.00	106.25	5.00	99.00	52.75	24.00	1.50	0.69	3020

1. Max. NEMA motor frame, which can be installed onto the baseplate.
2. Max. NEMA motor frame with the same shaft height as primary motor.
3. Weight without coupling and motor.

DRILLING OF FLANGES									
				ASME B 16.1 Class 125			ASME B 16.5 Class 150		
NPS	OD	RF	C	BC	d	n	BC	d	n
16.00	23.82	18.98	1.44	21.25	1.12	16	21.25	1.12	16

COPYRIGHT © SULZER PUMPS FINLAND OY

NaOH Dosing Skid

PN: 1096034

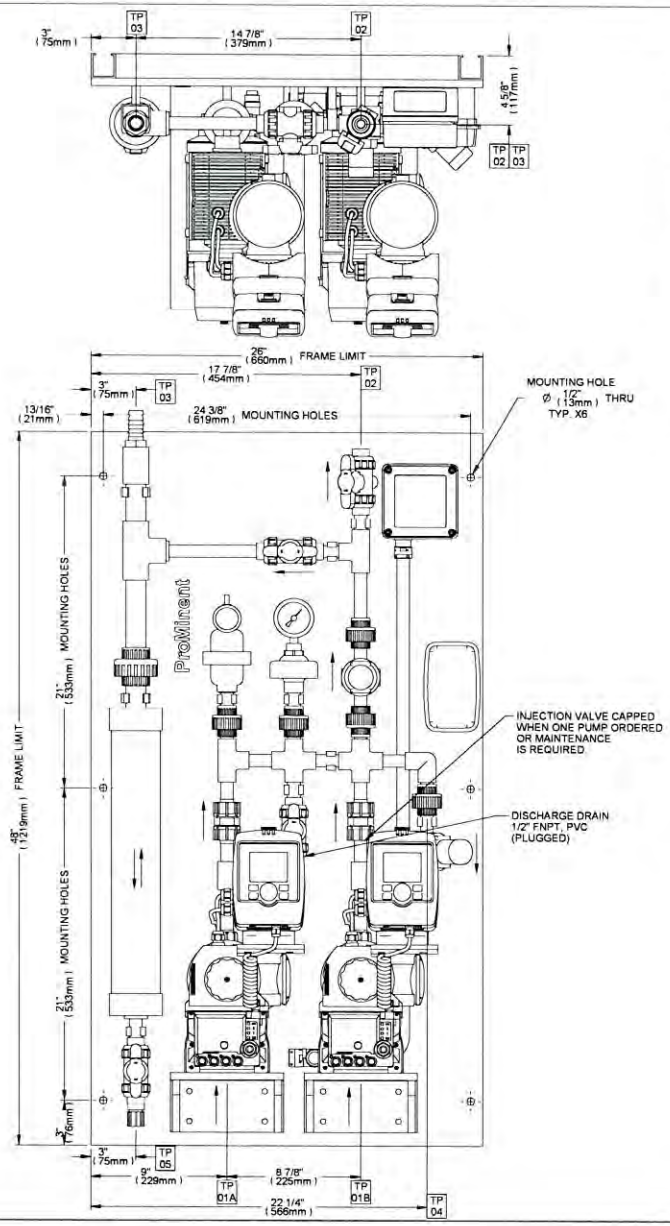

TERMINATION POINT SCHEDULE		
TP	SERVICE	CONNECTION
01A, 01B	SUCTION/INLET	5/8" TUBE / FOOT VALVE
02	DISCHARGE/OUTLET	1/2" SW OR FNPT, PVC
03	CALIBRATION COLUMN VENT BACK TO TANK	1" TUBE, PVC
04	PRESSURE RELIEF VALVE VENT BACK TO SAFE LOCATION	1/2" TUBE, PVC
05	CALIBRATION COLUMN DRAIN BACK TO TANK	1/2" TUBE, PVC

PROMINENT METERING PUMP
MECHANICALLY ACTUATED DIAPHRAGM TYPE
MODEL: S1CBH07065PVTS070UD11001EN
FLOW: 63 LPH (16.6 USGPH)
PRESSURE: 102 PSIG (7 BAR) -MAX.
SUCTION LIFT: 19.6ft (6m)
LIQUID END MATERIAL: PVDF/PTFE
TYP. X2
PN: 1103629

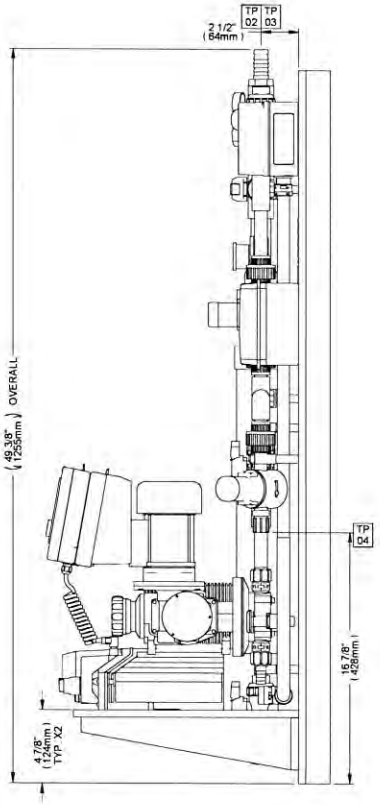

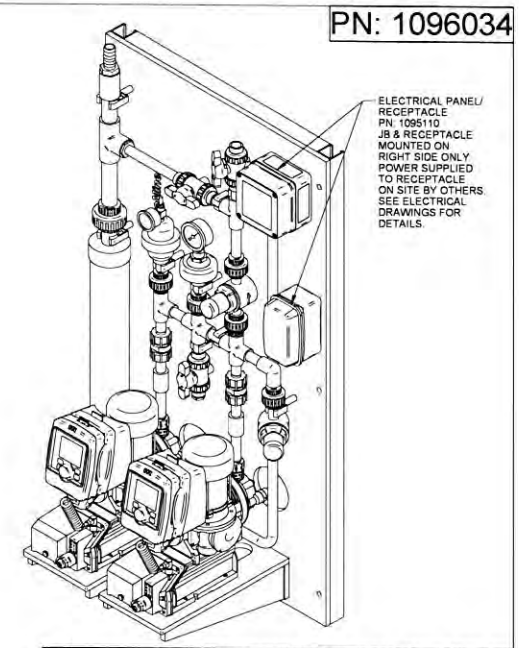

REV	DATE YY/MM/DD	DESCRIPTION	BY	APPD	REVD
3	2019/11/08	CHANGED PUMP TO SIGMA X & PUMP IDENT-CODE ISSUED FOR CONSTRUCTION	RS	–	
2	2019/05/02	ADDED SHIP LOOSE DISCHRGE HEADER ISSUED FOR CONSTRUCTION	RS	WS	
1	2019/02/07	ADDED SHIP LOOSE MATERIALS INITIAL RELEASE	RS	WS	

REVISIONS

CUSTOMER: SUEZ WATER TECHNOLOGIES & SOLUTIONS

SUBJECT

PFC PROSIP No: 1093729

PURCHASE ORDER No

PURCHASER'S EQUIP No

TITLE: SUEZ PROSIP-MW 1/2" PVC-EPDM 2 PUMP GENERAL ARRANGEMENT -

ENGINEERS SEAL

ProMinent®

GUELPH - ONTARIO - CANADA

DESIGNED	RS	APPROVED	
DRAWN	RS	SCALE	NTS
CHECKED	WS	DATE	2019/12/12

SHEET 1

CUSTOMER DWG No: WTS-2P-MD-PEW-0050-A

PFC DWG No: 1096034-200

REV: 3

PN: 1096034

COMPONENTS CHART

(1/2) TOP SIDE = CHART NUMBER
BOTTOM SIDE = QUANTITY NUMBER

Item Number	Document Number	Title	Quantity
1	1083174	BACK PRESSURE VALVE ASSEMBLY, 1/2" PVC-EPDM	1
2	1093730	CALIBRATION COLUMN ASSEMBLY, 1/2" PVC-EPDM, 2000mL	1
3	1083431	DISCHARGE HEADER, PROSIP MF-W, 1/2" PVC, EPDM	1
4	7741400	FITTING: PIPE 1/2" PVC, SCH 80	2
5	7260005	FITTING: TEE 1/2" SxSxS, PVC, SCH 80	1
6	7900317	LABEL: PROMINENT LOGO, WHITE & ORANGE x 1"H, VINYL	1
7	1082452	PULSATION DAMPENER ASSEMBLY, 1/2" PVC-EPDM, 164mL	1
8	7260010	SUPPORT: 1/2" (20mm) PIPE CLIP with 1/4" x 1-1/2" LONG PVC PIPE STANDOFF	2
9	1076215	SUPPORT: BACKBOARD 26" x 48" x 1/2" HDPE SHEET	9FT^2
10	1093743	SUPPORT: PUMP SHELF, ONE PUMP, WALL MOUNT, 1/2"-3/4" PIPE, MOTOR PUMPS, POLYETHYLENE	2
11	7904309	SUPPORT: UNISTRUT PVC 1-5/8" x 1-5/8"	12FT
12	7901183	VALVE: BALL VALVE, 1/2" PVC/EPDM, TYPE 21 (SOCKET & THREADED ENDS) CHEMLINE	1

SHIP LOOSE PARTS:

HOSE BARB, DN10 x 5/8" TUBE, PVC - 800554 - 4PCS
FOOT VALVE 1/2" PVC-EPDM - 7809464 - 2PCS
5/8" BRAIDED TUBE - 703701 7- 20FT
HOSE CLAMP 3/8"-1" - 1059963 - 4PC
(FOR PUMP SUCTION INLET/S)
1/2"x3/8" BRAIDED TUBE - 7902938- 10FT
(FOR P.R.V. VENT LINE)
BACK PRESSURE/PRESSURE RELIEF VALVE 1/2" SW, PVC - 1019883 - 1PC
Y-STRAINER 1/2" SW, PVC/EPDM - 7900293 - 1PC
CHECK VALVE 1/2" SW, PVC/EPDM - 7901156 - 1PC

SHIP LOOSE HEADER

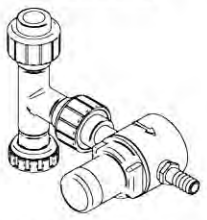

SYSTEM DISCHARGE P.R.V. HEADER
PN: 1103630

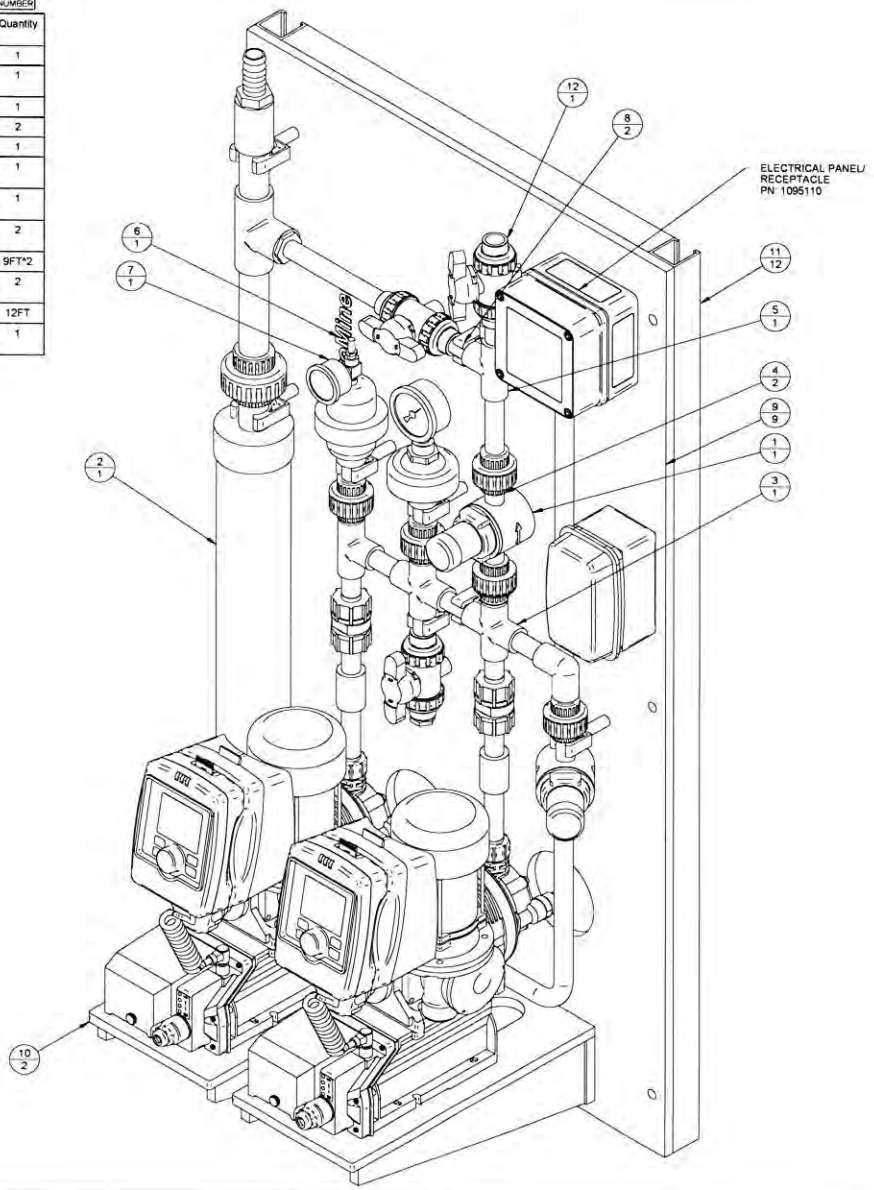

PROMINENT METERING PUMP
MECHANICALLY ACTUATED DIAPHRAGM TYPE
MODEL: S1CBH07065PVTS070U011001EN
FLOW: 63 LPH (16.6 USGPH)
PRESSURE: 102 PSIG (7 BAR) -MAX
SUCTION LIFT: 19.6ft (6m)
LIQUID END MATERIAL: PVDF/PTFE
TYP: X2
PN: 1103629

NOTES:

1. ALL PIPING CONNECTIONS ARE 1/2" SCHEDULE 80 PVC SOCKET/WELD UNLESS OTHERWISE REQUIRED BY PIPELINE DEVICES.

2. SEAL MATERIAL IS PTFE AND EPDM UNLESS OTHERWISE SPECIFIED.

3. SYSTEM DESIGNED TO ACCOMMODATE SIGMA MOTOR DRIVEN PUMPS ONLY.

4. PIPE SUPPORT FRAME IS MADE FROM 1/2" THICK HDPE SHEET & PVC STRUT. FRAME SUPPORT IS MADE BY BOLTED CONSTRUCTION.

5. ALL MOUNTING HARDWARE IS 304SS. ALL PIPE CLIPS AND STANDOFFS ARE PLASTIC.

6. CHARGING PRESSURE OF THE PULSATION DAMPENERS TO BE AT 80% OF THE DISCHARGE LINE OPERATING PRESSURE.

7. ALL INTERCONNECTING PIPE & FITTINGS, HARDWARE, GASKETS, SEALS AND WIRING ARE DONE ON SITE BY OTHERS. SHIPPED LOOSE MATERIALS ARE LISTED ON B.O.M. - INSTALLATION IS BY OTHERS.

8. ALL INTERCONNECTING PIPING SHALL BE FULLY & INDEPENDENTLY SUPPORTED BY OTHERS.

9. TOLERANCE ON ALL TERMINATION POINTS IS +/- 3/8" (10mm) UNLESS SPECIFIED BY CUSTOMER.

10. APPROX. SHIPPING WEIGHT: 135 Lb (61 Kg)
APPROX. OPERATING WEIGHT: 145 Lb (66 Kg)

11. SYSTEM IS FOR INDOOR INSTALLATION ONLY

12. SHIP LOOSE SYSTEM DISCHARGE P.R.V. HEADER, INSTALLED ON SITE BY OTHERS.

13. DESIGN NOTES:

- DESIGN TEMPERATURE: MAX: 86ºF (30ºC), MIN: 32ºF (0ºC)

UPSTREAM INJECTION PUMP-SUCTION:

- DESIGN PRESSURE: 14.5 PSIG (100kPa)
- MIN. TEST PRESSURE: 25 PSIG (172kPa)

DOWNSTREAM INJECTION PUMP-DISCHARGE:

- DESIGN PRESSURE: 150 PSIG (1034 kPa) MAX.
- MIN. TEST PRESSURE: 150 PSIG (1034 kPa)

TESTING CONDITION:

- TEST TYPE: HYDROSTATIC
- TEST MEDIUM: WATER
- TEST TEMPERATURE: AMBIENT: 68ºF (20ºC)
- TEST DURATION: 10 MIN. (MINIMUM)

CORROSION ALLOWANCE: 0.0" (0.0mm).

REV	DATE: YY/MM/DD	DESCRIPTION	BY	APPD	REVD
3	2019/11/08	CHANGED PUMP TO SIGMA X & PUMP IDENT-CODE ISSUED FOR CONSTRUCTION	RS	--	
2	2019/05/02	ADDED SHIP LOOSE DISCHRGE HEADER ISSUED FOR CONSTRUCTION	RS	WS	
1	2019/02/07	ADDED SHIP LOOSE MATERIALS INITIAL RELEASE	RS	WS	

REVISIONS

CUSTOMER: SUEZ WATER TECHNOLOGIES & SOLUTIONS

SUBJECT

PFC PROSIP No: 7693529

PURCHASE ORDER No

PURCHASER'S EQUIP. No

TITLE: SUEZ PROSIP-MW 1/2" PVC-EPDM, 2 PUMP - BILL OF MATERIALS -

ENGINEERS SEAL

ProMinent®

GUELPH - ONTARIO - CANADA

		DESIGNED	APPROVED
		DRAWN: RC	SCALE: NTS
SHEET: 1		CHECKED	DATE: 2019-11-08

CUSTOMER DWG No: WTS-2P-MD-PFW-0050-A

PFC DWG No: 1096034-200

REV: 3

Sodium Hypochlorite/Citric Acid Dosing Skid

PN: 1234567

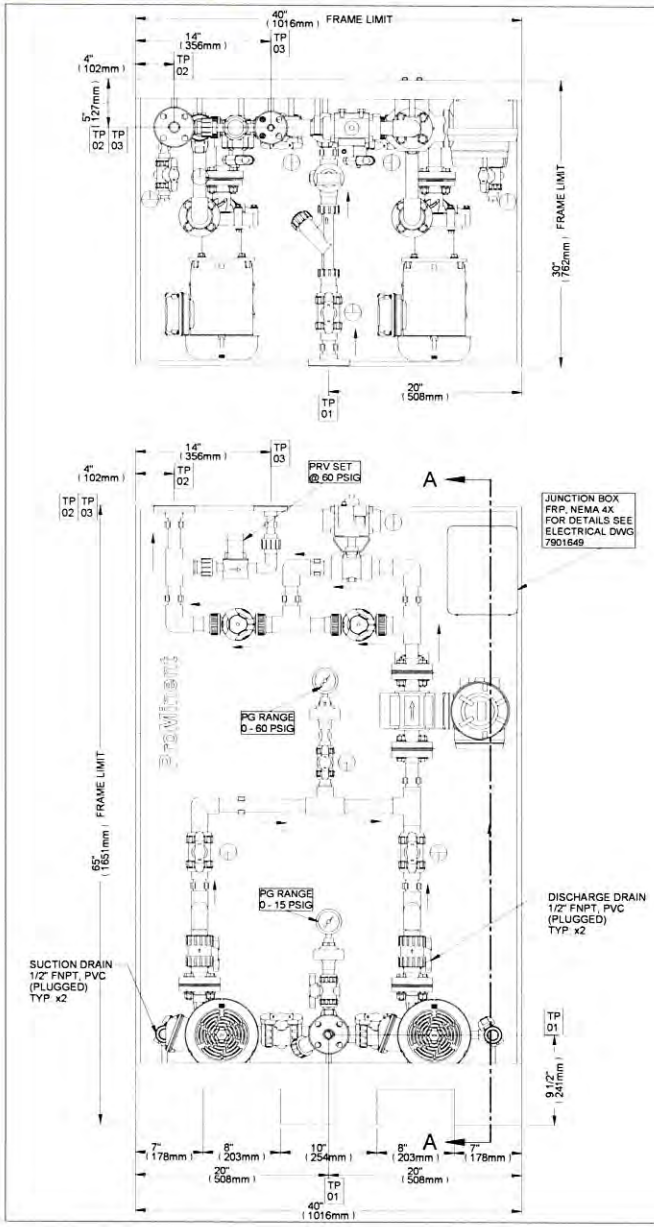

TERMINATION POINT SCHEDULE		
NOZZLE(TP)	SERVICE	CONNECTION
01	SCUTION / INLET	1" FF FLANGE, 150#, PVC
02	DISCHARGE / OUTLET	1" FF FLANGE, 150#, PVC
03	PSV RELIEF OUTLET	1/2" FF FLANGE, 150#, PVC

MAG DRIVE CENTRIFUGAL PUMP
MODEL: DB9V-R-FF-M272
MAXIMUM FLOW: 46 USGPM @ HEAD 11FT
MINMUM FLOW: 0.5 USPGM @ HEAD 67FT
CONSTRUCTION MATERIALS: PVDF (PRIMARY COMPONENTS)
MOTOR: 3435 RPM,1 HP (0.75 kW), 575V,60 Hz, 3 Ph
TYP: x2 (DUTY / STANDBY)

VENTED BALL VALVES REQUIRED

-THIS SYMBOL INDICATES SIDE OF THE VALVE THAT THE BALL IS TO BE VENTED TO. DRILL Ø1/8" HOLE.

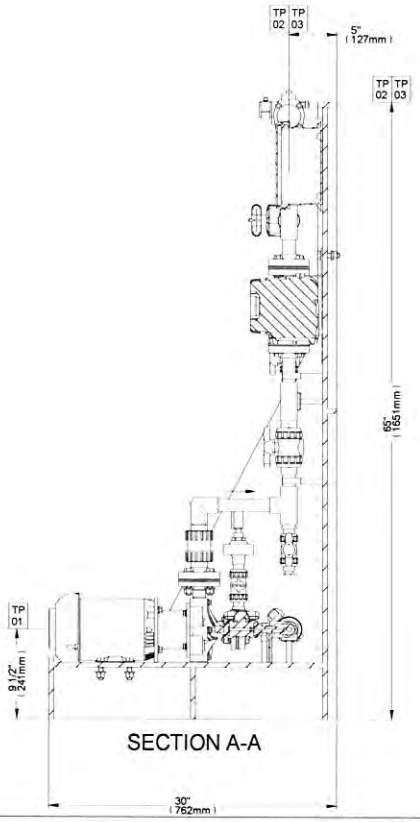

SECTION A-A

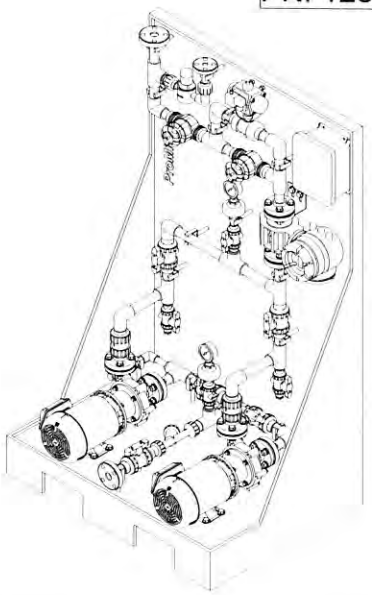

REV	DATE YY/MM/DD	DESCRIPTION	BY	APPD	REVD
1	2021/01/22	REVISED PER CLIENT REQUEST ISSUED FOR CONSTRUCTION	NS	RJ	
0	2020/12/22	INITIAL RELEASE	NS	RJ	

REVISIONS

CUSTOMER: SUEZ WATER TECHNOLOGIES & SOLUTIONS

SUBJECT

PFC PROSIP No: XXXXXXXX
PURCHASE ORDER No: —
PURCHASER'S EQUIP. No: XXXXXXXXXXXXXX

TITLE: SUEZ MAGDRIVE-SW 1" PVC-VITON, 2 PUMP - GENERAL ARRANGEMENT -

THIS DRAWING IS THE PROPERTY OF PROMINENT FLUID CONTROLS LTD. AND SHALL NOT BE COPIED OR TRANSFERRED WITHOUT THE WRITTEN CONSENT OF PROMINENT FLUID CONTROLS LTD.

ENGINEERS SEAL

ProMinent®
THE PROMINENT GROUP OF COMPANIES

GUELPH - ONTARIO - CANADA

PROMINENT FLUID CONTROLS LTD
400 SOUTHGATE DRIVE
GUELPH, ONTARIO, CANADA
N1H 6L9
TEL: 519 836 5602 FAX: 519 836 5228

PROMINENT FLUID CONTROLS LTD
RIDC PARK WEST
136 INDUSTRY DRIVE
PITTSBURGH P.A. USA 15275
TEL: 412 787 3444 FAX: 412 787 0996

DESIGNED	NS	APPROVED	
DRAWN	NS	SCALE	NTS
CHECKED	RJ	DATE	2020/12/22

SHEET: 1/2

CUSTOMER DWG No	PFC DWG No	REV
XXXXXXXXXXXXXXX	XXXXXXXX-210	1

COMPONENTS CHART

(1 / 2) TOP SIDE = CHART NUMBER, BOTTOM SIDE = QUANTITY NUMBER

COMPONENT LIST		*PART IS HIDDEN FROM VIEW	
ITEM	PART #	DESCRIPTION	QTY
1	7900292	DEVICE: Y-STRAINER, 1" SWxSW, TRUE UNION, PVC BODY, VITON O-RING MATERIAL, CHEMLINE	1
2	7740695	FITTING: 1" SW FLANGE, 1PC, 150#, SCH80, PVC, ASTM D 1784	8
3	7741396	FITTING: 1/2" SW FLANGE, 1PC, 150#, SCH80, PVC, ASTM D 1784	1
4	7741327	FITTING: ELBOW, 1" SWxSW, PVC, SCH 80	6
5	7260006	FITTING: ELBOW, 1/2" SWxSW, PVC, SCH 80	3
6	7000325	FITTING: PLUG 1/2" MNPT PVC SCH 80	4
7	7741358	FITTING: REDUCER BUSHING, 1" SPIG x 1/2" SW, PVC SCH80	7
8	7741333	FITTING: TEE, 1" SWxSWxSW, PVC, SCH80	11
9	7740551	FITTING: UNION, 1/2" SWxSW, PVC, VITON, SCH80	2
10	DWG: 3120800500-211	FRAME: 65" x 40" x 30", BLACK PP	1
11	7901609	GASKET: 1", FULL FACE, 150#, 1/8" THICK, FPM (VITON)	8
12	7902194	HARDWARE: FLAT WASHER, 1/2", 1.060" OD, 316 SS	48
13	7900011	HARDWARE: FLAT WASHER, 1/2", 316 SS	20
14	7902724	HARDWARE: HEX CAP SCREW, 1/2"-13, 2" LG, 18-8 SS, 1-1/4" THREAD LG	10
15	7900847	HARDWARE: HEX CAP SCREW, 1/2"-13, 2.5"LG, 18-8 SS, 1" THREAD LG	24
16	7900015	HARDWARE: HEX NUT, 1/2"-13, 18-8 SS	34
17	7900012	HARDWARE: LOCK WASHER, 1/2", 18-8 SS	34
18	233.53.0-15PSI W/ 990.31 SOCKET, KN31	INSTRUMENT: 2 -1/2" PRESSURE GAUGE, 0-15 PSIG, 304SS CASE, 316SS INTERNALS, 1/4" MNPT BOTTOM MOUNT, GLYCERINE FILL WITH PVC ISOLATOR, 1/2" SOCKETWELD PROCESS CONNECTION, 1/4" FNPT GAUGE CONNECTION, GLYCERINE FILL, WIKA	1
19	233.53.0-60PSI W/ 990.31 SOCKET, KN31	INSTRUMENT: 2 -1/2" PRESSURE GAUGE, 0-60 PSIG, 304SS CASE, 316SS INTERNALS, 1/4" MNPT BOTTOM MOUNT, GLYCERINE FILL WITH PVC ISOLATOR, 1/2" SOCKETWELD PROCESS CONNECTION, 1/4" FNPT GAUGE CONNECTION, GLYCERINE FILL, WIKA	1
20	10P25-ER1A1RA0B 5BA/DK5GD-25BEL	INSTRUMENT: MAGNETIC FLOW METER, PROMAG 10P25, DN25, INTEGRAL UNIT, 1" FLANGE 150# CONNECTIONS-CS(NON WETTED, PTFE LINER ANSI B16.5, CONNECTIONS, INTEGRAL MOUNTED NEMA-4X ENCLOSURE WITH LCD DISPLAY, 4-20mA OUTPUT, HART PROTOCOL, WITH TWO GROUND DISKS. 24VDC - ENDRESS-HAUSER	1
21	7900315	LABEL: PROMINENT LOGO, WHITE & ORANGE x 1-7/8"H, VINYL	1
22	7741324	PIPE: 1", PVC, SCH80	20ft
23	7741400	PIPE: 1/2", PVC, SCH80	5ft
24	7741318	SUPPORT: 1" (32mm) PIPE CLIP WITH 1/4" x 2-1/4" PVC PIPE STANDOFF	13
25	3120800500-202	SUPPORT: 1"FLANGE SUPPORT BRACKET, TYPE 1, 304 SS	1
26	7260010	SUPPORT: 1/2" (20mm) PIPE CLIP WITH 1/4" x 2-1/2" PVC PIPE STANDOFF	4
27	21A010VC, 21010_PAS00, SOLEV4	VALVE: 1" ACTUATOR PNEUMATIC, PA SERIES, PAS00, ON 1" PVC/VITON, TYPE 21 UNION BALL VALVE, WITH PAD MOUNTED PILOT VALVE. 24 VDC - CHEMLINE	1
28	161 514 664	VALVE: 1" DIAPHRAGM VALVE, PVC/VITON, TYPE 514 PVC-U, SOCKET WELD ASTM, TRUE UNION. GEORG FISCHER	2
29	1019883	VALVE: BACK PRESSURE VALVE, 1/2" SW CONNECTION, BODY MATERIAL PVC, PRESSURE RANGE 0-150PSI, PROMINENT	1
30	7901155	VALVE: BALL CHECK VALVE, 1" SW, TRUE UNION, BODY MATERIAL PVC, SEALS VITON, CHEMLINE	2
31	7745145	VALVE: BALL VALVE, 1" SW, BODY MATERIAL PVC, SEALS VITON (FKM), VENTED BALL, (COMES WITH SOCKET & FNPT ENDS), TYPE 21, CHEMLINE	5
32	7745143	VALVE: BALL VALVE, 1/2" SW, BODY MATERIAL PVC, SEALS VITON (FKM), VENTED BALL, (COMES WITH SOCKET & FNPT ENDS), TYPE 21, CHEMLINE	6

MAG DRIVE CENTRIFUGAL PUMP
MODEL: DB9V-R-FF-M272
MAXIMUM FLOW: 46 USGPM @ HEAD 11FT
MINIMUM FLOW: 0.5 USPGM @ HEAD 67FT
CONSTRUCTION MATERIALS: PVDF (PRIMARY COMPONENTS)
MOTOR: 3435 RPM,1 HP (0.75 kW), 575V,60 Hz, 3 Ph
TYP: x2 (DUTY / STANDBY)

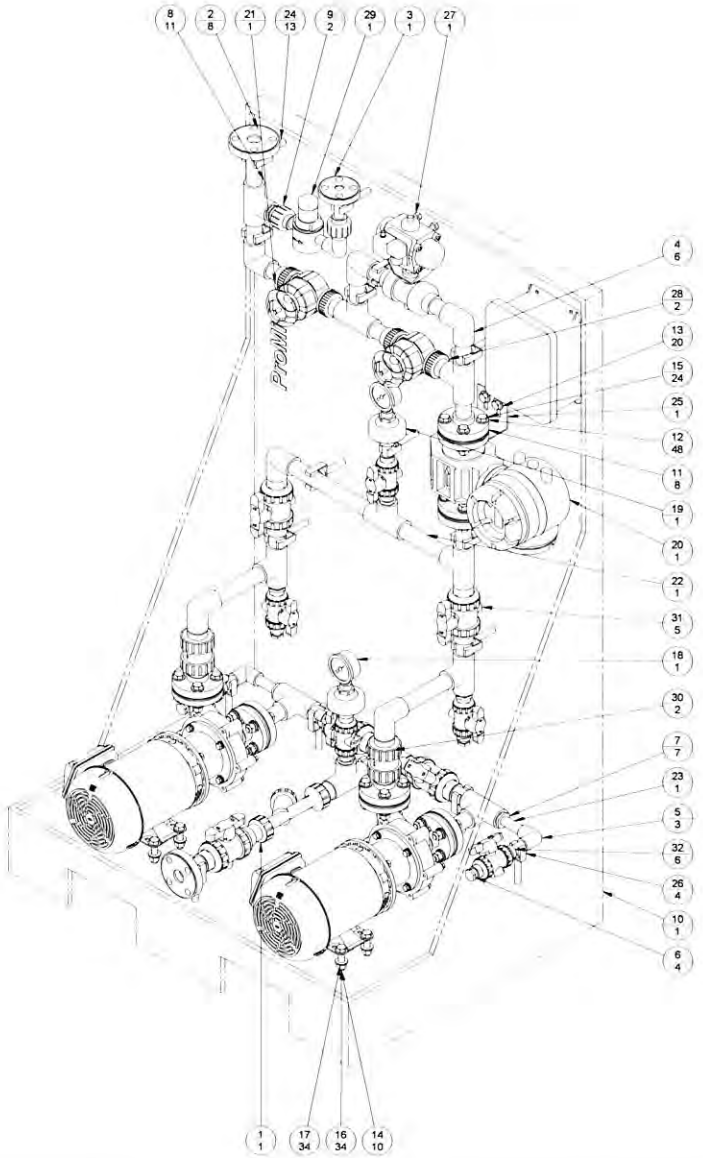

PN: 1234567

NOTES:

1. PIPING MATERIAL IS PVC SCH 80 IN CONFORMANCE WITH ASTM D 1785 (FOR PHYSICAL DIMENSIONS, TEST REQUIREMENTS AND MAXIMUM OPERATING PRESSURE) IN SIZES 1" & 1/2" PIPE.
   ALL CONNECTIONS ARE 1" & 1/2" SCH 80 PVC SOCKET WELD UNLESS OTHERWISE REQUIRED BY PIPELINE DEVICES.
   UNIONS ARE TRUE UNION STYLE, SCH80 PVC WITH VITON O-RING SEAL REATED FOR 150 PSIG.
   FLANGES ARE PVC, FULL FACE, CLASS 150, ASME/ANSI B16.5.

2. GASKETS ARE FULL FACE TYPE, CLASS 150, VITON, 1/8" THK FOR FLANGE CONNECTION, ASME B16.20

3. BOLTING ARE 18-8 SS HEX CAP SCREW WITH FLAT WASHER, LOCK WASHER AND 18-8 SS HEX NUT

4. PUMP AND PIPING SUPPORT FRAME IS CONSTRUCTED OF BLACK POLYETHYLENE MATERIAL THICKNESS: 1/2" [13MM] AND IS FABRICATED BY WELD CONSTRUCTION.

5. ALL INTERCONNECTING PIPE & FITTINGS AND WIRING BY OTHERS.

6. ALL SEAL MATERIAL IS PTFE/VITON OTHERWISE SPECIFIED BY CUSTOMER.

7. TOLERANCE ON ALL TERMINATION POINTS: +/-10mm (+/-3/8").

APPROX.SHIPPING WEIGHT: 285 LB (129 Kg).
APPROX.OPERATING WEIGHT: 310LB (140 Kg).

DESIGN NOTES:

UPSTREAM INJECTION PUMP-SUCTION:

- DESIGN TEMPERATURE: MIN. 15ºC TO MAX. 25ºC
- DESIGN PRESSURE: 14.7 PSIG
- MIN. TEST PRESSURE: 25 PSIG

DOWNSTREAM INJECTION PUMP-DISCHARGE:

- DESIGN TEMPERATURE: MIN. 15ºC TO MAX. 25ºC
- DESIGN PRESSURE: 60 PSIG
- MIN. TEST PRESSURE: 100 PSIG

TESTING CONDITION:

- TEST TYPE: HYDROSTATIC
- TEST MEDIUM: WATER
- TEST TEMPERATURE: AMBIENT 68ºF (20ºC)
- TEST DURATION: 10 MIN. (MINIMUM)

CORROSION ALLOWANCE: 0.0" (0.0mm)

REV	DATE YY/MM/DD	DESCRIPTION	BY	APPD	REVD
1	2021/01/22	REVISED PER CLIENT REQUEST ISSUED FOR CONSTRUCTION	NS	RJ	
0	2020/12/22	INITIAL RELEASE	NS	RJ	

REVISIONS

CUSTOMER: SUEZ WATER TECHNOLOGIES & SOLUTIONS

SUBJECT

PFC PROSIP No: XXXXXXXX
PURCHASE ORDER No: ---
PURCHASER'S EQUIP No: XXXXXXXXXXXX

TITLE: SUEZ MAGDRIVE-SW 1" PVC-VITON, 2 PUMP - BILL OF MATERIALS -

THIS DRAWING IS THE PROPERTY OF PROMINENT FLUID CONTROLS (1) LTD. AND SHALL NOT BE COPIED OR TRANSFERRED WITHOUT THE WRITTEN CONSENT OF PROMINENT FLUID CONTROLS (1) LTD.

ENGINEERS SEAL

ProMinent®
THE PROMINENT GROUP OF COMPANIES

GUELPH - ONTARIO - CANADA

PROMINENT FLUID CONTROLS (1) LTD.
1466 SUTHERLAND DRIVE
GUELPH, ONTARIO, CANADA
N1H 6J5
TEL: 519-836-7690 FAX: 519-836-0525

PROMINENT FLUID CONTROLS (U.S.) LTD.
PFCC PARK WEST
ONE ALLENTOWN DRIVE
PITTSBURGH, PA 15205 - USA
TEL: 412-787-2484 FAX: 412-787-2484

	DESIGNED: NS	APPROVED:	
	DRAWN: NS	SCALE: NTS	
SHEET 2/2	CHECKED: RJ	DATE: 2020/12/22	

CUSTOMER DWG No	PFC DWG No	REV
XXXXXXXXXXXXXXX	XXXXXXXX-210	1

My Account | Contact Us | Sign In | Cart $0.00 Français | CA

ULINE .ca 1-800-295-5510

Search GO

Products Uline Products Quick Order Catalog Request Special Offers About Us Careers



Enlarge & Video

IBC TANKS

Hold as much liquid as six 55-gallon drums. Use up to 33% less floor space.

- Store and dispense water, pesticides or other liquids and powders.
- Chemical-resistant HDPE tank surrounded by a galvanized steel cage.
- Mounted to steel frame pallet for easy transport.
- Stack up to 3 high.
- 4-way fork access.
- 6" diameter fill cap, 2" diameter drain.
- Meets FDA Requirements.



IBC TANKS

MODEL NO.	DESCRIPTION	DIMENSIONS L x W x H	CAPACITY	UN RATING	WT. (LBS.)
H-3886	IBC Tank	48 x 40 x 46"	275 Gallon	31HA1/Y	128
H-4420		48 x 40 x 53"	330 Gallon		146



Cast Iron Piston Air Compressors

Contractor/Professional/Industrial Series
2-20 HP (1.5-15kW)

7290- Cast Iron Piston Air Compressors_brochure_FD.indd 1 08-01-2020 14:39:19

The CR Cast Iron Piston Compressor Series

Newly designed, lasting reliability

More dependable than ever with tailored options for all contractor, professional and industrial applications, Atlas Copco is pleased to introduce the newly designed CR cast iron piston compressor series. The CR range delivers a champion combination of outstanding reliability matched with robust performance, even in the most demanding conditions for a dependable piston you can count on.

Capitalizing on heavy-duty cast iron construction and a combination of computer-aided design with controlled machining processes, the new CR single stage and two-stage compressors deliver up to 175 psig with 24/7 reliability. We back this up with our bumper to bumper warranty packages, and have options for a 5 year extended warranty, depending on the model chosen.



A complete and tailored range of premium compressors at affordable prices

Count on Atlas Copco's cast iron piston technology to drive your production reliably and support your application demand. We can meet your exact requirements with a broad piston compressor line, whether you work in a small workshop or on a large onsite project.

A range of series with available options:

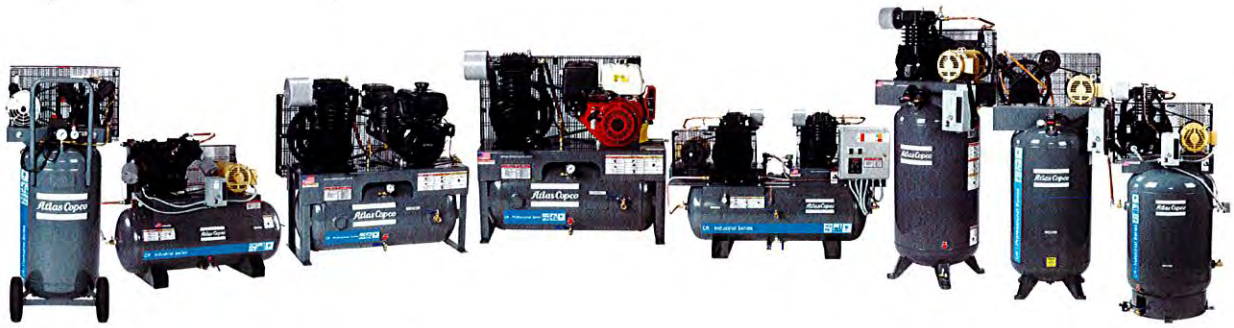

7290- Cast Iron Piston Air Compressors_brochure_FD.indd 2 08-01-2020 14:39:20

CR Cast Iron Piston Air Compressor

A 60 second guide to the piston that sets the bar high

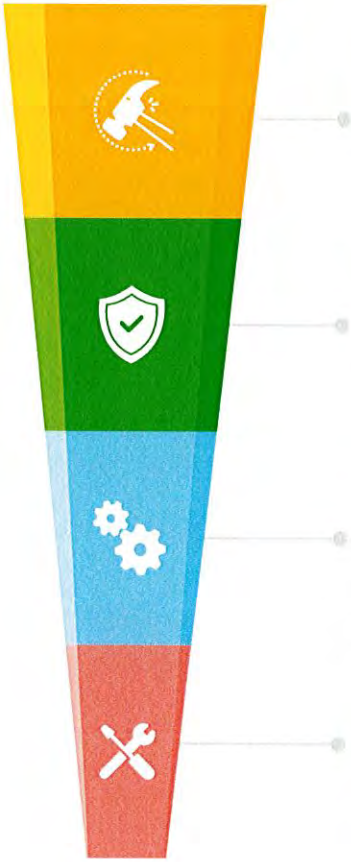

Heavy-Duty Cast Iron construction

Ensures durability and reliability for the most demanding applications

Reliability

Engineered using the most state-of-the-art manufacturing techniques for a product of design excellence. The compressed air you need to keep your operations running efficiently with maximum uptime.

Tailored

Customize your piston to fit your needs.
Options available include:

- Auto drain
- After cooler
- Low oil level switch
- TEFC motor
- NEMA4 control panel
- Pressure lubricated pump
- Simplex and duplex configurations

Easy maintenance

Every component is easily accessible allowing minimum downtime and requires only limited maintenance.



TEFC Motor



NEMA4 control panel

7290- Cast Iron Piston Air Compressors_brochure_FD.indd 3 08-01-2020 14:39:20

The CR Contractor Series

A premium compressor at the lowest capital cost for point of use applications.

2-5.5HP/135 psi

The Contractor Series provides affordable compressed air in a small, lightweight package. The low-profile cast iron design, semi-pneumatic wheel, heavy gauge wire belt guard and rugged pump design provide the ideal solution for small, portable applications.

Features and Benefits:

- Standard 2-year bumper to bumper warranty
  - No start-up kit required
- Single stage units
  - Electric or gas powered
- Fully enclosed belt guard and ASME safety valves
- Pilot valve control on gas drive units to reduce engine speed on low demand





Technical Specifications

*Voltage available from 115-230

Model	Horsepower	Tank	ACFM		LxWxH	Weight
		Gallons	@ 100psi	@ 175psi	inches	lbs.
CR C2-SS-24GV	2	24	4.9	4.1	20x21x46	150
CR C2-SS-2x4G	2	2x4	4.9	4.1	43x18x23	145
CR C2-SS-23GH	2	23	4.9	4.1	22x33x33	150
CR C3-SS-2x4G	3	2x4	9.1	7.6	43x18x25	174
CR C3-SS-60GV	3	60	9.1	7.6	28x23x67	260
CR C5-SS-60GV	5	60	11.4	9.5	28x23x67	271
CR C5.5-SS-2x4G-Honda Gas	6	2x4	11.4	9.5	43x18x26	179

The CR Professional Series

A reliable electric compressor for rugged, stationary use.

5-20HP/135-175 psi

The Professional Series provides high pressure at the lowest cost in a small, lightweight package. The balanced counter weighed crankshaft and cast iron design provide smooth, easy operation with a range of unit options supplying an ideal solution for demanding applications.

Features and Benefits:

- 1 year bumper to bumper with 5 year extended warranty on the pump*
  - *With purchase of minor and major maintenance kits
- Duplex, Simplex or Base Mounted

7290- Cast Iron Piston Air Compressors_brochure_FD.indd 4 08-01-2020 14:39:21

- Two-stage
  - Two stage best for high demands needing up to 175 psi.
- Oversized oil reservoir for low oil temperatures, industrial class bearings and one-piece aluminum head for heat dissipation providing longevity.
- Low maintenance with 2-piece connecting rods and oil pressure gauge.
- High efficiency intercooler with stainless steel valve design for highest volumetric efficiency.





Technical Specifications

CR Professional Series - Standard

*Voltages available from 200-575 volt

Description	Horsepower	Tank	ACFM		LxWxH	Weight
		Gallons	@ 100psi	@ 175psi	inches	lbs.
CR5-OTS-80GV - Vertical	5	80V	15.1	14.5	32x26x75	554
CR5-TS-80GV - Vertical	5	80V	17.9	17.2	32x26x75	554
CR7.5-TS-80GV - Vertical	7.5	80V	23.8	22.6	32x26x75	599
CR10-TS-120GV - Vertical	10	120V	35.9	35	40x30x77	845
CR10-TS-120GH - Horizontal	10	120H	35.9	35	72x28x54	845
CR-TS-30GH-13HG - 13 HP Honda Gas Unit	13	30	23.5	22.6**	41x23x42	465
CR-TS-30GH-14KG - 14 HP Kohler Gas Unit	14	30	23.5	22.6**	42x24x41	465
CR15-TS-120GH - Horizontal	15	120H	54.4	51	70x28x54	870

CR Professional Series - Standard and Packaged TEFC motor upgrade/NEMA4 control panel

Description	Horsepower	Tank	ACFM		LxWxH	Weight
		Gallons	@ 100psi	@ 175psi	inches	lbs.
CR5-TS-80GV-3PH-PS,TN4 - Vertical	5	80V	17.9	17.2	32x26x75	554
CR7.5-TS-80GV-3PH-PS,TN4 - Vertical	7.5	80V	23.8	22.6	32x26x75	599
CR10-TS-120GV-3PH-PS,TN4 - Vertical	10	120V	35.9	35	40x30x77	845
CR10-TS-120GV-3PH-PS,TN4 - Horizontal	10	120H	35.9	35	72x28x54	845
CR15-TS-120GV-3PH-PS,TN4 - Horizontal	15	120H	54.4	51	70x28x54	870

CR Professional Series - Packaged Duplex

Description	Horsepower	Tank	ACFM		LxWxH	Weight
		Gallons	@ 100psi	@ 175psi	inches	lbs.
CR5-TS-120GH-3PH-PPS-D - Horizontal	5*2 = 10 HP	120H	35.9	35	77x30x52	1000
CR7.5-TS-120GH-3PH-PPS-D - Horizontal	7.5*2 = 15 HP	120H	54.4	51	77x30x52	1300
CR10-TS-200GH-3PH-PPS-D - Horizontal	10*2 = 20 HP	200H	71.8	70	78x46x63	2200

** - Single phase units stop at 7.5HP

7290- Cast Iron Piston Air Compressors_brochure_FD.indd 5 08-01-2020 14:39:21

The CR Industrial Series

The most reliable piston air compressor customizable to you.

5-20HP/135-175 psi

The Industrial Series provides high pressure at low cost in a newly designed, cast iron package. The balanced counter weighed crankshaft provide a smooth, easy operation with a range of unit options supplying an ideal solution for the most robust applications.

Features and Benefits:

- 1 year bumper to bumper with 5 year extended warranty on the pump*
  – *With purchase of minor and major maintenance kits
- Duplex, Simplex or Base Mounted
- Two-stage
  –Two stage best for high demands needing up to 175 psi
- Oversized oil reservoir for low oil temperatures, industrial class bearings and one-piece aluminum head for heat dissipation providing longevity
- Low maintenance with 2-piece connecting rods and oil pressure gauge
- High efficiency intercooler with stainless steel valve design for highest volumetric efficiency

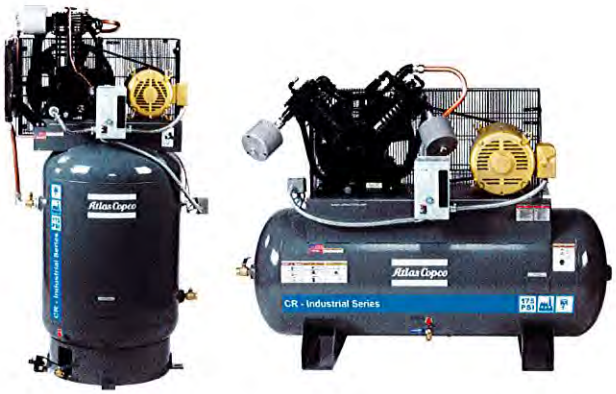

Technical Specifications

CR Industrial Series

The CR Series piston compressor is a cast-iron, splash lubricated, 2 stage, 175psi product. All models are equipped with magnetic starter as standard. The industrial series comes equipped with an electric drain, belt guard aftercooler, and low oil level switch on all models. The 10 and 15HP models also come equipped with head unloaders.

CR Industrial Series - Standard and TEFC motor and NEMA4 controller upgrade

Model	Horsepower	Tank	ACFM		LxWxH	Weight
		Gallons	@ 100psi	@ 175psi	inches	lbs.
CR5-TS-80GV-IS, Standard or TN4	5	80V	17.9	17.2	32x26x75	554
CR7.5-TS-80GV-IS, Standard or TN4	7.5	80V	23.8	22.6	32x26x75	599
CR10-TS-120GV-IS, Standard or TN4	10	120V	35.9	35	40x30x77	845
CR10-TS-120GH-IS, Standard or TN4	10	120H	35.9	35	72x28x54	845
CR15-TS-120GH-IS, Standard or TN4	15	120H	54.4	51	40x30x77	845

CR Industrial Series - Duplex TEFC motor and NEMA4 controller upgrade

Duplex units offer twin motors and twin pumps for additional output and redundancy.

Model	Horsepower	Tank	ACFM		LxWxH	Weight
		Gallons	@ 100psi	@ 175psi	inches	lbs.
CR5-TS-120GH-IS-D,TN4	5	120H	35.9	35	77x30x52	1000
CR7.5-TS-120GH-IS-D,TN4	7.5	120H	54.4	51	77x30x52	1300
CR10-TS-200GH-IS-D, TN4	10	200H	71.8	70	78x46x63	2200

** - Single phase units stop at 7.5HP

7290- Cast Iron Piston Air Compressors_brochure_FD.indd 6 08-01-2020 14:39:21

Buyers Guide

Looking to customize your unit?

Series	Magnetic Starter	Low oil level switch	Electronic Drain	Belt guard Aftercooler	TEFC Motor	NEMA 4 Control Panel	Pressure Lubricated Pump	Head Unloaders
Standard	✓							
Professional Package	✓		✓	✓	ⓘ	ⓘ	ⓘ	
Industrial	✓	✓	✓	✓	ⓘ	ⓘ	ⓘ	✓ *10 and 15HP

Looking to complete your package?

Optional add-ons

- Protect your tools and end-products, investments and processes
- Meet requirements for cleaner, dryer air
- Reduce your service and maintenance costs

In-line Filters: General purpose, high efficiency and odor removal line filters to meet high quality air needs.



Dryers: Avoid condensation and chance of corrosion by removing water from your compressed air.

Model	SCFM
FXHT-1	25
FXHT-2	50
FXHT-3	75
FXHT-4	100
FXHT-5	125



AIRnet Aluminum or Stainless Steel Piping: Easy to install, modular piping system for air and inert gases.



7290- Cast Iron Piston Air Compressors_brochure_FD.indd 7 08-01-2020 14:39:26

EN © Atlas Copco AB, Stockholm, Sweden. Production: Atlas Copco Brand Studio. Print: BrandFactory. November 2019

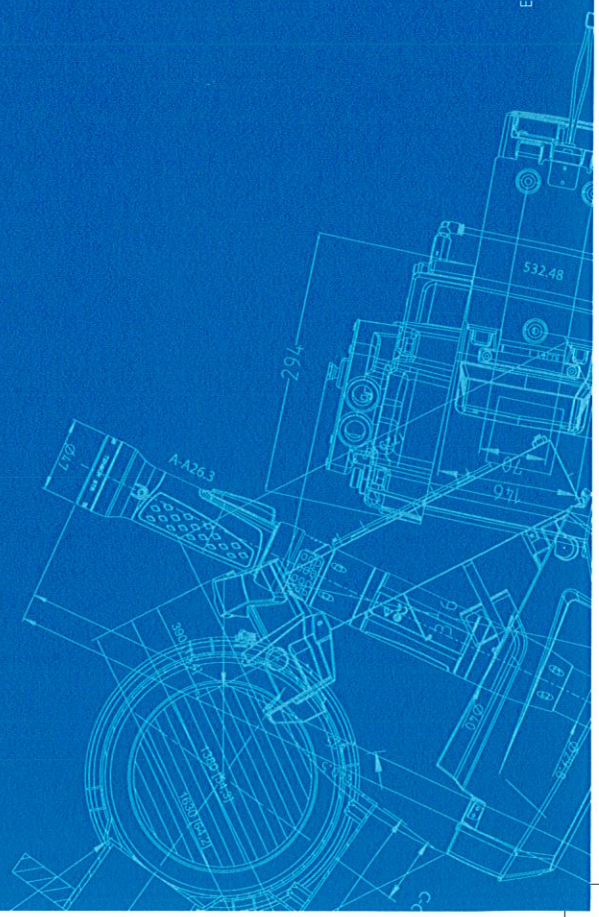

Atlas Copco Compressors

300 Technology Center Way Ste 550
Rock Hill, South Carolina 29730

atlascopco.com

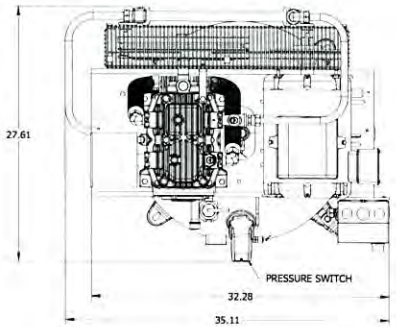

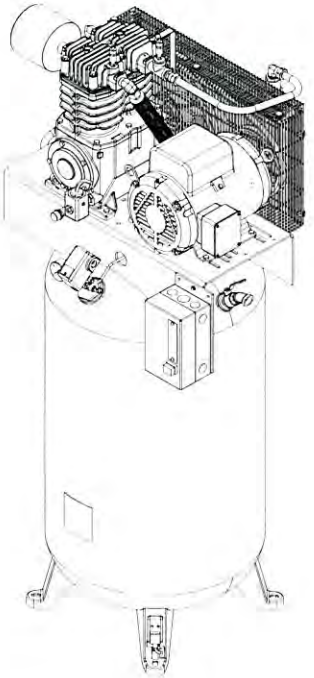

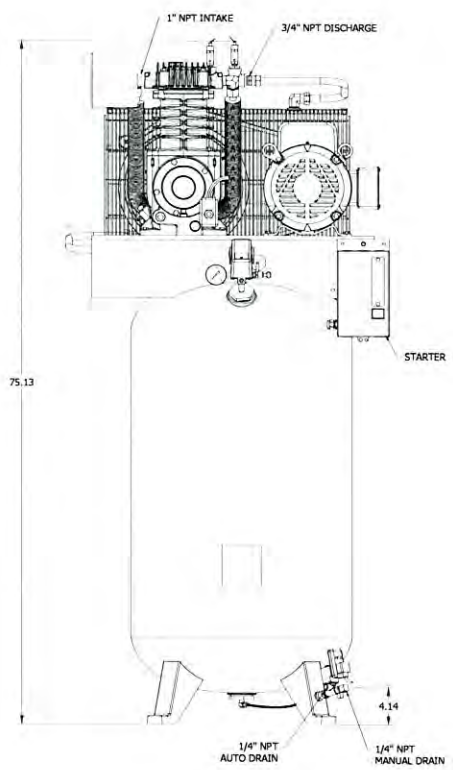

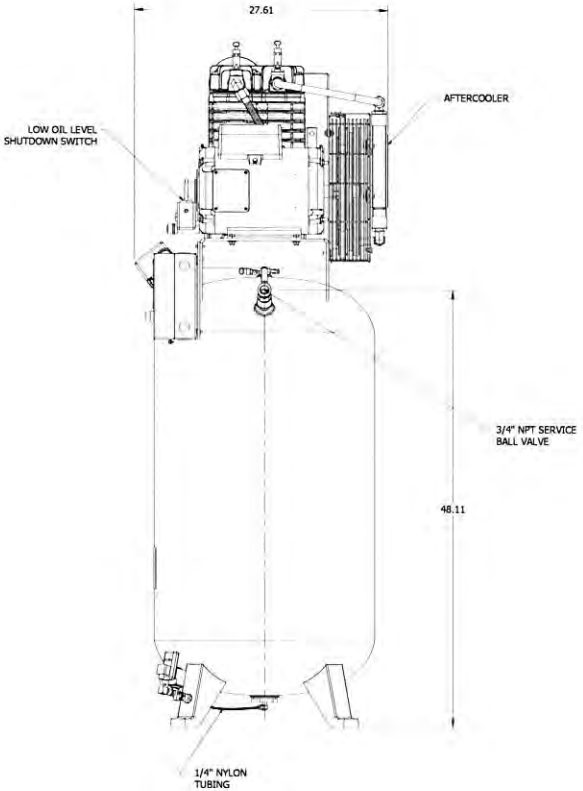

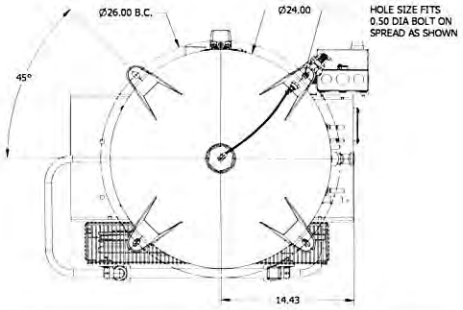

NOTES:

1) ALL DIMENSIONS GIVEN IN INCHES.
2) ALLOW A MINIMUM OF 12 INCHES ON ALL SIDES FOR SERVICE AND COOLING.
3) NEMA 4 STARTER SHIPPED LOOSE.

DRAWING,DIM,CR7.5-TS-80V-IS

Not Applicable

Not Applicable

2022035028

Approved Internal

7/30/2018

2022035029

ISLIP FLOW CONTROLS Inc.

IFC Series B125F and B150F Style 1 Iron and Bronze Flanged Basket Strainers

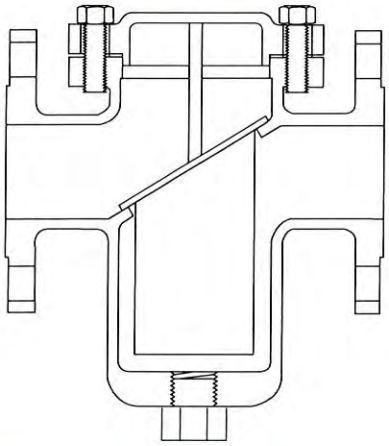

Design Features:

- Iron strainers are equipped with FF flanges (Series B125F) in accordance with ASME B16.1.
- Bronze strainers are equipped with FF flanges (Series B150F) in accordance with ASME B16.24.
- Strainer body meets applicable ASME/ANSI standard.
- All strainers equipped with bolted cover flanges that utilize a flat gasket seal.
- Strainer cover flanges are designed in accordance with ASME Section VIII, Div.1 Appendix II.
- Straight thru flow is accomplished by an angular basket design.
- Standard basket construction is 304 SS perforated plate.
- Recommended minimum straining level is 250 microns.
- N.P.T. drain connection furnished with plug.
- Recommended for installation in horizontal pipelines.

Notes: 1. See page 11 for details of available quick opening covers.
2. See page 19 for basket strainer effective areas.

Parts List and Standard Materials

Part IFC Model	Cast Iron B125FIB1	Bronze B150FBB1
Body	A126-B	B62
Cover	A126-B	B62
Screen [1]	304 SS	304 SS
Plug [2]	A126-B	B62
Gasket [1]	Bolted Cover: Graphite Quick Opening: See pg. 11	Bolted Cover: Teflon Quick Opening: See pg. 11
Bolt/Stud [2]	A307-B	Nonferrous
Nut [2]	A563	Nonferrous

Notes: 1. Recommended spares.
2. Materials of equivalent strength may be substituted at manufacturer's option.

Upper Pressure Limits (Non-Shock)

IFC Model	Body Material	M.A.W.P. psig (Bars)
B125FIB1 (Up to 12" size)	A126-B	200 (13.79)
B125FIB1 (Sizes 14" and up)	A126-B	150 (10.34)
B150FBB1	B62	225 (15.51)

Lower Temperature Limits

Body Material	Lower Limit °F (°C)
A126-B, B62	-20 (-28.9)

Pressure Temperature Chart (in accordance with ASME B16.1 & ASME B16.24)

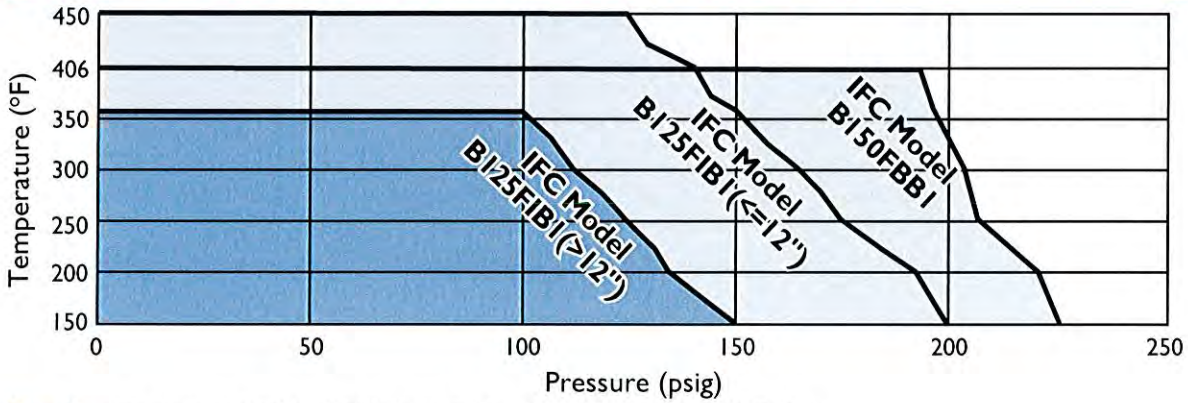

Note: Max. rating temperature for IFC model B150FBB1 limited by codes such as ASME B31.1, ASME B31.5, etc.

Tel. 905-335-8777 Fax. 905-335-0977 Toll Free Tel. 1-866-872-0072 Toll Free Fax. 1-866-872-0073

ISLIP FLOW CONTROLS Inc.

IFC Series B125F and B150F Style 1
Iron and Bronze Flanged Basket Strainers

Standard Screens	
Size range	**Opening**
2 - 3"	0.045 in.
50mm - 80mm	1.2 mm
4" - 20"	0.125 in.
100mm - 500mm	3.2 mm

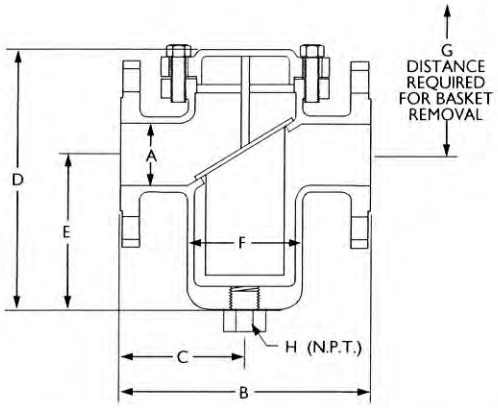

Dimensional Data (Class 125-150)

Size in (mm)	A in (mm)	B in (mm)	C in (mm)	D in (mm)	E in (mm)	F in (mm)	G in (mm)	H NPT in/mm B125FIB1	H NPT in/mm B150FBB1	Weight Lb./(Kg.) Cover	Weight Lb./(Kg.) Unit
2"	2.00	8.13	4.06	8.38	5.00	3.00	11.75	1/2	1	5	23
50	51	206	103	213	127	76	298	15	25	2.3	10
2 1/2"	2.50	8.25	4.13	9.75	6.25	4.00	13.25	3/4	1	7	33
65	64	210	105	248	159	102	337	20	25	3.2	15
3"	3.00	9.88	4.94	11.25	7.13	5.00	15.38	3/4	1	9	44
80	76	251	125	286	181	127	391	20	25	4.1	20
4"	4.00	11.50	5.75	12.88	8.00	6.00	17.75	1	1	13	67
100	102	292	146	327	203	152	451	25	25	5.9	30
5"	5.00	13.13	6.56	14.50	8.50	6.50	20.50	1	1	20	88
125	127	333	167	368	216	165	521	25	25	9.1	40
6"	6.00	14.88	7.44	16.00	9.00	8.00	23.00	1	1	26	120
150	152	378	189	406	229	203	584	25	25	12	54
8"	8.00	18.75	9.38	21.00	12.00	10.00	30.00	1 1/2	N/A	45	220
200	203	476	238	533	305	254	762	40		20	100
10"	10.00	20.00	10.00	24.75	14.00	12.50	35.50	1 1/2	N/A	70	353
250	254	508	254	629	356	318	902	40		32	160
12"	12.00	26.25	13.13	29.75	17.00	15.00	42.50	1 1/2	N/A	110	523
300	305	667	333	756	432	381	1080	40		50	237
14"	14.00	30.25	15.13	37.50	22.00	18.00	53.00	1 1/2	N/A	140	815
350	356	768	384	953	559	457	1346	40		64	370
16"	16.00	33.25	16.63	39.25	22.88	20.75	55.63	1 1/2	N/A	180	1041
400	406	845	422	997	581	527	1413	40		82	472
18"	18.00	38.50	19.25	40.00	19.00	24.25	61.00	2	N/A	220	1446
450	457	978	489	1016	483	616	1549	50		100	656
20"	20.00	41.38	20.69	46.25	23.25	26.50	69.25	2	N/A	285	1980
500	508	1051	525	1175	591	673	1759	50		129	898

Notes: 1. Vents are optional.
2. Dimension "B" is +/- 0.13".
3. Dimension "D" will change when Quick Opening covers are used.
4. Sizes 8" and larger come complete with a side drain as standard. A bottom drain is optional.

General

1. Quick opening cover features are shown on pages 11-12.
2. See pg. 14 for available perforations and screen materials.
3. Pressure drop information is shown on pg. 15.
4. See pg. 22 for ordering information.
5. Dimensions shown are subject to change. Consult factory for certified prints when required.

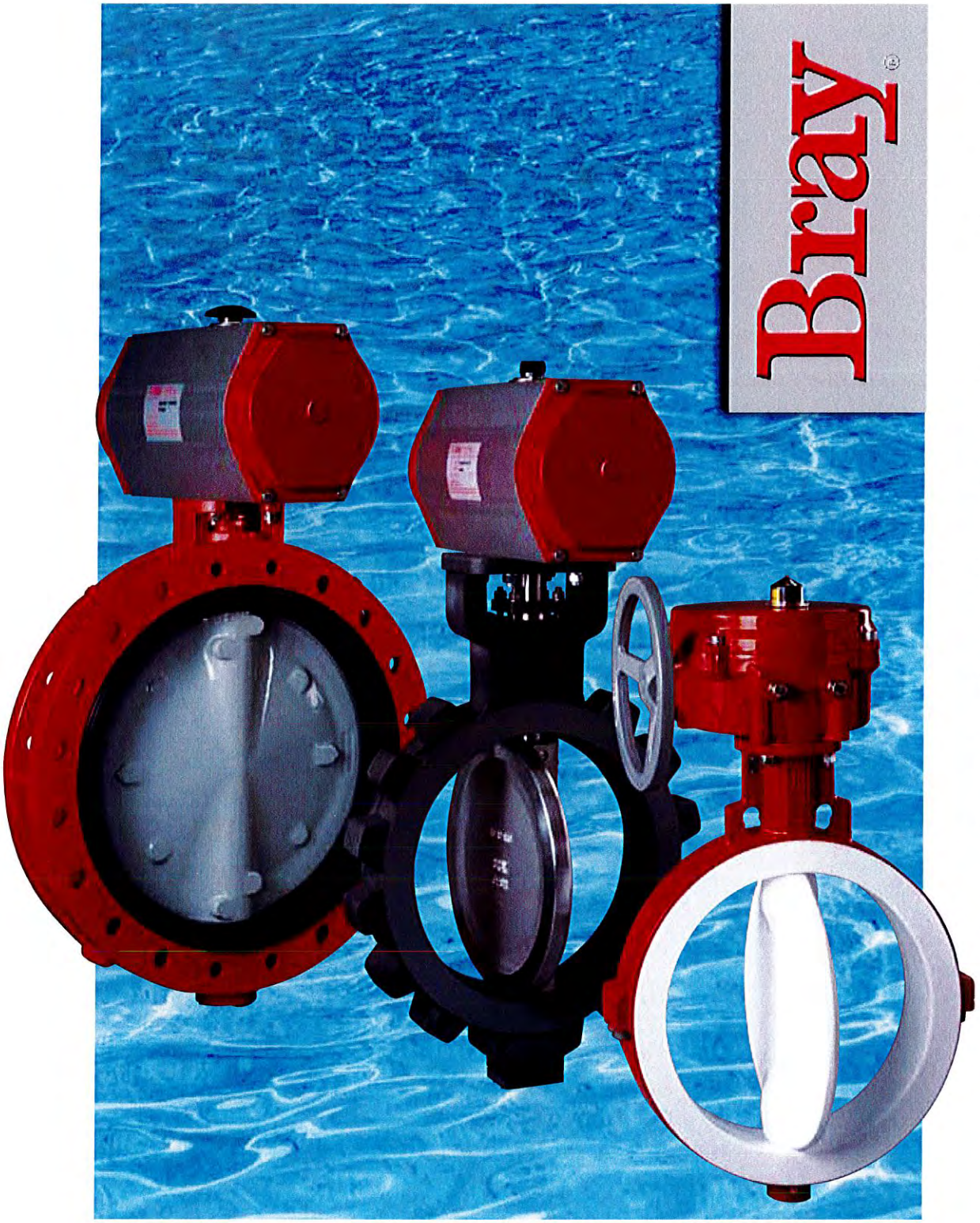

Products for the Water Industry

Water & Wastewater Treatment

Filtration • Purification • Desalination

NSF / ANSI 61CERTIFIED

The High Performance Company

Bray Out Performs AWWA Verification Criteria

Bray Resilient Seated Butterfly Valves

are designed, manufactured and tested to meet or exceed AWWA C504, Section 5.0 performance criteria. Also, Bray valves have exceeded a million cycles in actual AWWA type services, far in excess of the AWWA C504, Section 5.1.4.3 cycling performance standard. Pressure testing to ensure shell, seat and stem seal's integrity is performed on every valve manufactured by Bray Controls.

Bray Controls has been successfully providing resilient seated valves for over 20 years for many applications in Water, Wastewater, Filtration and Desalination applications. Bray peroxide cured EPDM seats exhibit outstanding performance in water services. Third party testing of Bray EPDM per ASTM D6284 shows excellent compatibility with chlorine/ chloramine additives. Consult your local Bray Representative for your specific application.

Automation – Single Source Responsibility

As a manufacturer of electric and pneumatic actuators and accessories, Bray takes full responsibility for the operation of the valve/actuator package. All Bray actuators direct-mount to the valves without the need for costly brackets, linkages and couplers. With this breadth of product and experience, Bray Controls is the fastest growing automated valve producer in the water and wastewater industry.

As the leading supplier of automated butterfly valves to the water filter and air blower OEMs, Bray products are standard at many water, wastewater treatment and desalination plants. Using state-of-the-art materials and design, Bray butterfly valves and actuators have been successfully applied in the following applications:

- Raw water
- Fresh water
- Wastewater
- Digester Gas
- Aeration
- Chemical Treatment
- Reverse Osmosis Filtration
- Backwash Filters
- Seawater Intake
- Power

Bray resilient seated butterfly valves are approved and certified worldwide for potable water applications

Service Conditions	AWWA C504 Specification	BRAY Resilient seated Valves
Media	Fresh Water	Fresh Water, Wastewater, Seawater & Chemicals
PH Limits	6 to 12	3 to 13
Temperature Limits	125°F (52°C) Maximum	250°F (121°C) Maximum
Velocity Limits-Liquid	16 ft/sec. (4.9 m/sec.)	30 ft/sec. (9.1 m/sec.)

Cycle Test Requirements *Valve Size - In. (mm)*	AWWA Minimum Cycles	BRAY Resilient seated Valve Cycles
3" (75) - 72" (1800)	1,000 - 10,000	5 - 10 TIMES GREATER THAN AWWA

Valve Components	AWWA C504 Specification	BRAY Resilient seated Valves
Valve body	EXPOSED TO Media	ISOLATED FROM Media
Valve disc	EXPOSED TO Media (Ductile Iron with Stainless Steel Edge)	EXPOSED TO Media (NSF/FDA Approved Nylon 11 Coated Ductile Iron)
Valve stem	EXPOSED TO Media	ISOLATED FROM Media

Resilient Seated Butterfly Valves Sizes 2"– 96" (50mm - 2400mm)

INTERNAL DISC/STEM CONNECTIONS

Bray offers three disc-to-stem connections, Double 'D' Splined and Double Key. These internal non-wetted connections eliminate typically exposed external disc-to-stem connections such as screws or taper pins which can:

- **Result in leak paths, erosion, corrosion and vibration failures.**
- **Require difficult machining for disassembly.**
- **Require replacement of disc and stem upon failure, since both are matched for the life of the valve.**

Disassembly of Bray's internal connection is performed by simply pulling the stem out of the disc. Bray's precision machining of the disc and the stem connection minimizes hysteresis and produces maximum strength engagements. All stem designs incorporate a blow-out proof feature.



The DOUBLE 'D' disc-to-stem connection features matched precision machined flats on the stem and in the disc.
Size 2"– 20" (50mm–500mm)

The SPLINED disc-to-stem connection features matched precision machined male splines in the stem and female in the disc.
Size 22"– 48" (550mm–1200mm) .

The DOUBLE KEYED disc-to-stem connection features matched double keyways machined into the disc and stem. Keys engage the connection.
Size 52"– 96" (1300mm–2400mm).





- Body Styles:
  Wafer, Lug
  Size 2" - 20" (50mm - 500mm)
  Double Flanged
  Size 3" - 96" (80mm - 2400mm)
- NSF /ANSI 61 Certified valves
- Body and stem are isolated from line media.
- FDA approved Nylon 11 coating on disc resists corrosion, abrasion and adherence of contaminants. Nylon 11 coating is also available on Bodies for salt air and corrosive envirionments.
- Smaller, lighter and a more cost effective solution compared to traditional AWWA butterfly valves
- Flow capacity is 30% higher on average than traditional AWWA butterfly valves
- EPDM seat compliant with FDA 21 CFR 177.2600

High Performance Butterfly Valves

Sizes 2½ "– 60" (65mm - 1500mm)

High Performance Butterfly Valves have been successfully applied to many applications in power plants, desalination plants and offshore oil/gas drilling and production platforms.

- **Wafer, Lug and Double Flanged Styles**
- **ANSI, DIN, BS and JIS flange patterns available**
- **ISO 5211 global standard**
- **Approvals/Compliance**
  - **NSF/ANSI 61- Potable water**
  - **CE**
  - **ABS**
  - **DNV**

Bray Controls is proud to offer the Bray/McCannalok line of high performance butterfly valves. This product line is recognized as a proven leader with over 35 years of successful service in process industries worldwide. The Bray/McCannalok's unique, patented design received Chemical Processing's Vaaler Award for Best Product shortly after it was introduced. The simple, innovative design offers rugged reliability and extremely easy maintenance in the field. Independent and internal tests have proven Bray/McCannalok's superior service life capability, with bubble-tight shut-off through hundreds of thousands of cycles.

The Bray/McCannalok valves can be automated with direct mount (no couplers) Bray pneumatic and electric actuators. When compared to gate, globe, ball, diaphragm and plug valves, the Bray/McCannalok butterfly valve is significantly smaller and lighter weight, therefore installation space, time, and maintenance costs are greatly reduced.

The Bray/McCannalok High Performance Valve delivers the highest quality and highest value available for your requirements.

DEAD-END SERVICE

Bray/McCannalok ANSI Class 150, 300 and 600 valves with lug bodies are rated for bidirectional dead-end service at the full differential pressure rating.

TESTED:

Bray/McCannalok valves are tested to API 598 standards, including both low pressure and high pressure bi-directional leakage tests.



- **ANSI Class 150, 300 and 600 designs**
- **Carbon Steel, Stainless Steel, Duplex Stainless Steel or other Alloy Materials**
- **RTFE seats withstand temperatures up to 500 °F (260° C)**
- **Self-energized seat is pressure assisted, not pressure dependent**
- **Backwash filter valve with significant advantages versus plug valves (less weight, lower cost, excellent torque and control valve characteristics)**
- **Ideally suited to aeration and boiler room applications**

Sanitary and PTFE Lined Butterfly Valves

Sizes 2"– 24" (50mm - 600mm)

The Bray *HPV* PTFE High Performance Valve

- Wafer and Lug Styles
- PTFE, Conductive PTFE or UHMWPE Trim
- Rated for 150 psi (10.3 bar) differential pressure
- Excellent for the following applications:
  - Corrosive
  - High temperature
  - Abrasive
  - Digester gas

The Series 22/23 *HPV* line of butterfly valves sets the new standard of reliability and innovation. Extensive field research and engineering have developed this state-of-the-art design which provides excellent shut off protection (bubble-tight shut off) and high C_V values.



- Fully lined body and disc isolates all other valve parts from the media
- Thin disc profile dramatically reduces pressure drop/pump costs
- External polyester coating provides excellent corrosion and wear resistance
- Available with UHMWPE Trim
- Available for Sanitary and Ultra-Pure Water Requirements

Actuators and Accessories

Series 92/93 Pneumatic Actuators

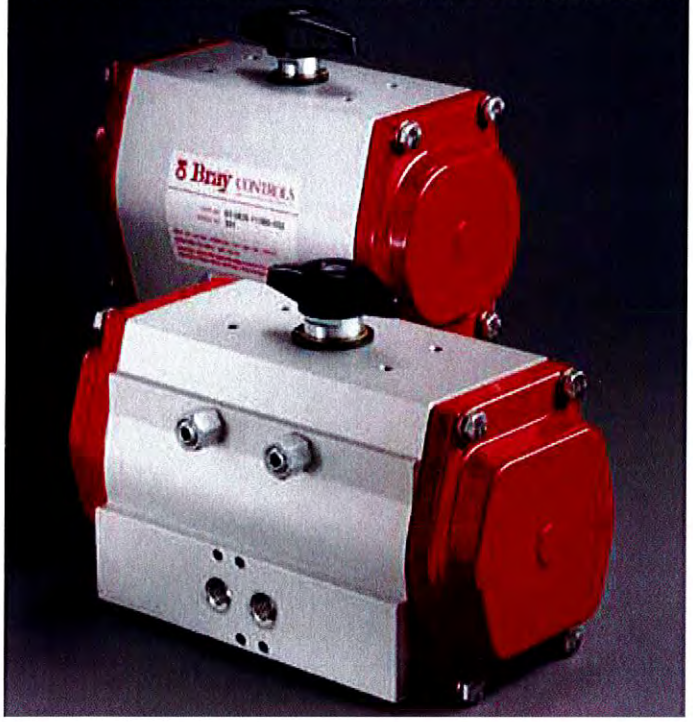

Bray's Series 92/93 line of high performance and high quality pneumatic actuators combines styling, strength, compactness and simplicity of design to produce the best rotary actuator in the market today.

Engineering excellence and precision manufacturing have produced a modular product line with reduced overall size requirements and economic savings. In addition, all Bray Accessories are fully modular and directly mount to the actuator – providing flexibility and efficiency at reduced cost.

SPRING RETURN Bray's Series 93 spring return models employ a unique cartridge system for easy conversion from direct acting to spring return actuation.

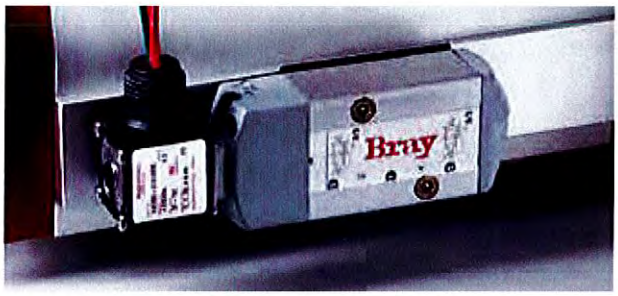

SERIES 63 3-WAY AND 4-WAY SOLENOID VALVES

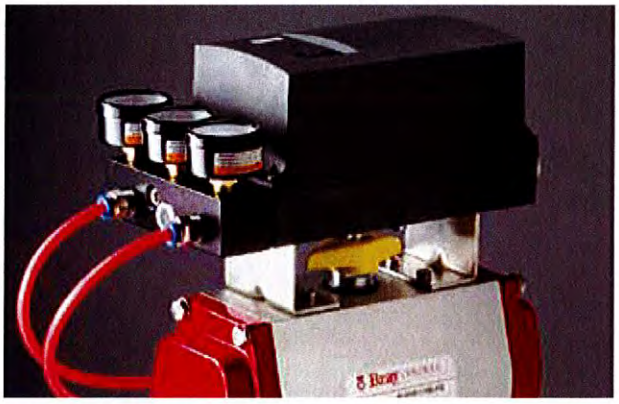

SERIES 6A ELECTRO-PNEUMATIC POSITIONERS



SERIES 52 VALVE STATUS MONITORS

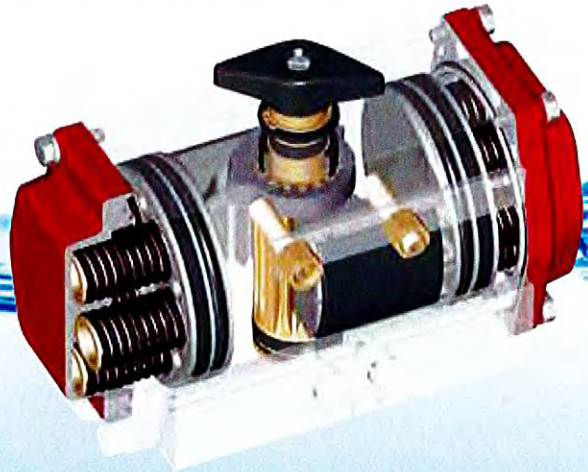



SERIES 50 VALVE STATUS MONITORS

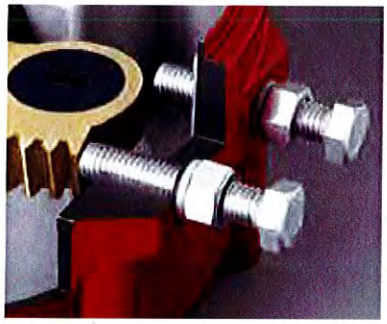

STAINLESS STEEL MECHANICAL TRAVEL STOPS

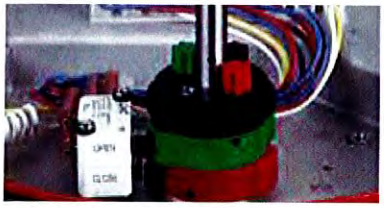

INFINITELY ADJUSTABLE TRAVEL LIMIT CAMS



OPTIONAL TORQUE LIMITING SWITCH SYSTEM



RUGGED ELECTRIC ACTUATOR FOR ROTARY VALVES
300 LB-IN [34 Nm] TO 18,000 LB-IN [2030 Nm] OUTPUT TORQUE

Bray Controls' years of proven success in electric actuation, combined with innovative engineering, has produced the Series 70. The Series 70 features on-off or modulating control. This electric actuator for rotary valves delivers highly reliable service.

Bray's unique Control Center has many advantages over present industry standards including:

- **UL, CSA and CE certification available**
- **Ease of customer field wiring directly to the terminal strip without interference from other components**
- **Simple and unique manual override handwheel system**
- **Lowest profile and lightest weight actuator on the market**
- **Simple finger or screw driver infinite adjustment of travel limit cams without interference from other components**
- **Highly visible valve status indicator**
- **Externally adjustable travel stops**
- **Captive cover bolts**
- **Components not requiring customer access are protected underneath the Power Center cover plate.**



SERVO OPERATION CAN BE CONFIGURED TO ACCEPT STANDARD INPUT SIGNALS

SEACORR COATING AVAILABLE FOR CORROSIVE ENVIRONMENTS

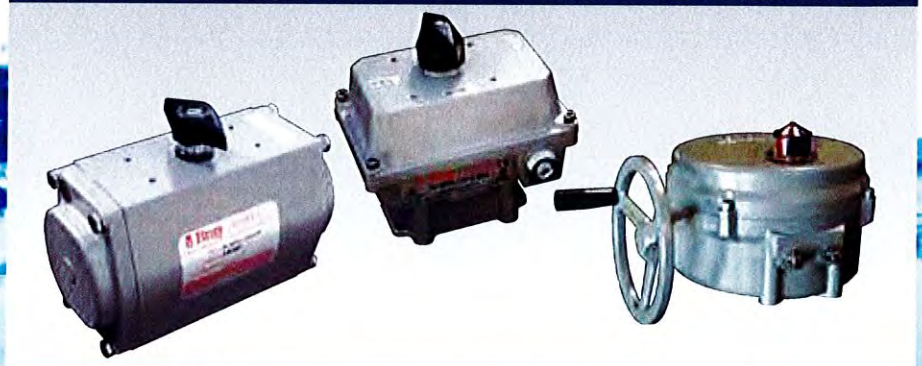

BRAY CONTROLS

USA
Houston, TX. +281.894.5454

BENELUX
Heerhugowaard +31.72.572.1410

BRAZIL
Paulinia SP-Brazil +55.19.3844.6161

CANADA
Montréal +514.344.2729

CHILE
Centro de Empresas +56.2739.2966

CHINA
Hangzhou, Zhejiang +86.571.828.52200

GERMANY
Krefeld +49.2151.53360

INDIA
Gujarat +91.265.2633868

MEXICO
Zapopan, Jalisco, +52.33.3836.4460

PACIFIC
Melbourne, Australia +613.9580.9755

PERU
Lima +511.251.0251

POLAND
Oświęcim +48.33.842.1968

UNITED KINGDOM
Inchinnan +44.141.812.5199

VIETNAM
Ho Chi Minh City +84.8.3742.3428

FLOW-TEK

USA
Houston, TX +832.912.2300

CHINA
Hangzhou, Zhejiang +86.571.828.52200

RITEPRO

CANADA,
Montréal +514.324.8900

CHINA,
Hangzhou, Zhejiang +86.571.828.52200



▲ WORLD HEADQUARTERS - BRAY INTERNATIONAL , INC. - USA

Global Manufacturing, Service Around the Corner

To serve you locally, each region maintains a factory certified sales and service network for all Bray International products.

▼ BRAY CONTROLS - CHINA - Office & Manufacturing



All statements, technical information, and recommendations in this bulletin are for general use only. Consult Bray representatives or factory for the specific requirements and material selection for ... intended application. The right to change or modify product ... or product without prior notice is reserved. Patents issued ... applied for worldwide.

Bray® is a registered trademark of BRAY INTERNATIONAL, Inc.
© 2010 Bray International. All rights reserved.

B-1045_EL_AWWA_2010-09

Bray® CONTROLS

A Division of BRAY INTERNATIONAL, Inc.
13333 Westland East Blvd. Houston, Texas 77041
281.894.5454 FAX 281.894.9499 www.bray.com

TU5 SERIES TURBIDIMETERS

Applications
- Drinking Water
- Power
- Beverage
- Pharmaceutical



The next standard in the evolution of turbidity

Only the new TU5 Series Lab & Process Turbidimeters with 360° x 90° Detection™ deliver unprecedented confidence that a change in your reading is a change in your water.

Groundbreaking 360° x 90° Detection™ Technology

The TU5 Series employs a patented optical design that sees more of your sample than any other turbidimeter, delivering the best low level precision and sensitivity while minimizing variability from test to test.

Matching lab and online results

For the first time you will be able to remove the uncertainty of which measurement to trust, thanks to identical 360° x 90° Detection™ Technology in both instruments.

Everything about turbidity – faster

The TU5 Series dramatically reduces the time needed to get a turbidity measurement you can rely on, with 98% less online sample surface area to clean, sealed vials for calibration, and the elimination of the need for indexing and silicone oil in the lab. Not to mention, a smaller online sample volume means you will detect events almost immediately.

No surprises

Prognosys™ monitors your TU5 Series online instrument, proactively alerting you to maintenance needs before your measurement becomes questionable. And a Hach Service Agreement protects your investment and helps ensure that you stay in compliance and on budget.

HACH®
Be Right™

Technical Data*

TU5200

Light Source	Class 2 laser product, with embedded 650 nm (EPA) or 850 nm (ISO), max. 1.0 mW Class 2 laser source (complies with IEC/EN 60825-1 and to 21 CFR 1040.10 in accordance with Laser Notice No. 50)
Range	EPA: 0 to 700 NTU / FNU / TE/F / FTU 0 to 100 mg/L 0 to 175 EBC ISO: 0 to 1000 NTU / FNU / TE/F / FTU 0 to 100 mg/L 0 to 250 EBC
Accuracy	±2 % of reading plus 0.01 NTU from 0 to 40 NTU; ±10 % of reading from 40 to 1000 NTU based on Formazin primary standard (at 25 °C)
Resolution	0.0001 NTU / FNU / TE/F / FTU / EBC / mg/L
Repeatability	<40 NTU: Better than 1% of reading or ±0.002 NTU on Formazin at 25 °C (77 °F), whichever is greater >40 NTU: Better than 3.5% of reading on Formazin at 25 °C (77 °F)
Stray Light	<10 mNTU
Units	NTU, FNU, TE/F, FTU, EBC; mg/L if calibrated with Degrees calibration curve
Operating Temperature Range	10 to 40 °C (50 to 104 °F)
Operating Humidity	80% at 30 °C (non condensing)
Sample Temperature	4 to 70 °C (39 to 158 °F)
Storage Conditions	-30 to 60 °C (-22 to 140 °F)
Power Requirements (Voltage)	100 - 240 VAC
Power Requirements (Hz)	50/60 Hz
Certifications	CE compliant US FDA accession number: 1420493-000 EPA version, 1420492-000 ISO version Complies with IEC/EN 60825-1 and to 21 CFR 1040.10 in accordance with Laser Notice No. 50) Australian RCM Marking
Dimensions (H x W x D)	195 mm x 409 mm x 278 mm
Weight	5.29 lbs. (2.4 kg)
Warranty	1 year

TU5300 sc / TU5400 sc

Light Source	Class 2 laser product, with embedded 650 nm (EPA) or 850 nm (ISO), max. 1.0 mW Class 2 laser source (complies with IEC/EN 60825-1 and to 21 CFR 1040.10 in accordance with Laser Notice No. 50)
Range	EPA: 0 to 700 NTU / FNU / TE/F / FTU 0 to 175 EBC ISO: 0 to 1000 NTU / FNU / TE/F / FTU 0 to 250 EBC
Accuracy	±2% of reading plus 0.01 NTU from 0 to 40 NTU ±10% of reading from 40 to 1000 NTU based on Formazin primary standard
Resolution	0.0001 NTU / FNU / TE/F / FTU / EBC
Repeatability	TU5300 sc: Better than 1% of reading or ±0.002 NTU on Formazin at 25 °C (77 °F), whichever is greater TU5400 sc: Better than 1% of reading or ±0.0006 NTU on Formazin at 25 °C (77 °F), whichever is greater
Stray Light	<10 mNTU
Units	NTU, FNU, TE/F, FTU, EBC
Signal Average Time	5 to 90 seconds (default: 30 seconds)
Response Time	T90<30 seconds at 100 mL/min
Sample Temperature	2 to 60 °C (35 to 140 °F)
Sample Pressure	6 bar (87 psi) maximum, compared to air at sample temperature range from 2 to 40 °C (35.6 to 104 °F)
Sample Flow Rate	100 to 1000 mL/min; optimal flow rate: 200 to 500 mL/min
Operating Temperature Range	0 to 50 °C (32 to 122 °F)
Operating Humidity	Relative humidity: 5 to 95% at different temperatures, non-condensing
Storage Conditions	-40 to 60 °C (-40 to 140 °F)
Certifications	CE compliant US FDA accession number: 1420493-000 EPA version, 1420492-000 ISO version Complies with IEC/EN 60825-1 and to 21 CFR 1040.10 in accordance with Laser Notice No. 50) Australian RCM Marking
Dimensions (H x W x D)	249 mm x 268 mm x 190 mm
Weight	5.95 lbs. (2.7 kg) (11 lbs. (5.0 kg) with all accessories)
Warranty	1 year

**Subject to change without notice.*

Principle of Operation

The TU5 Series turbidimeters measure turbidity by directing a laser into a sample to scatter off suspended particles. The light that is scattered at a 90° angle from the incident beam is reflected through a conical mirror in a 360° ring around the sample before it is captured by a detector.

The amount of light scattered is proportional to the turbidity of the sample. If the turbidity of the sample is negligible, little light will be scattered and detected by the photocell and the turbidity reading will be low. High turbidity, on the other hand, will cause a high level of light scattering and result in a high reading.

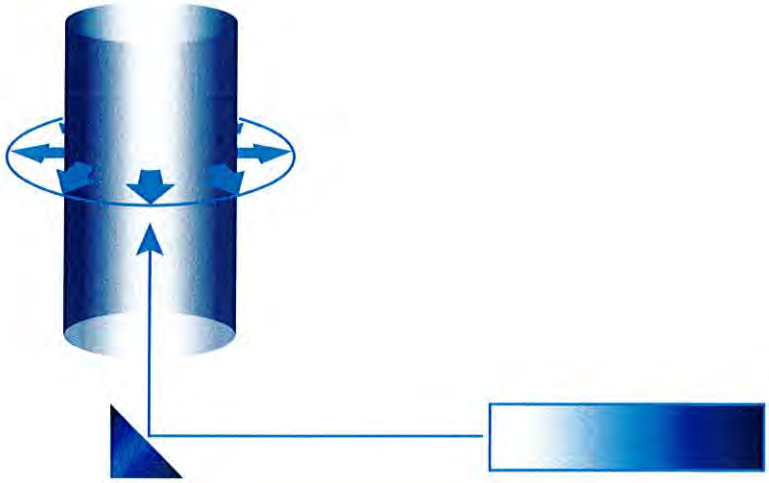

Dimensions

TU5300 sc and TU5400 sc front view

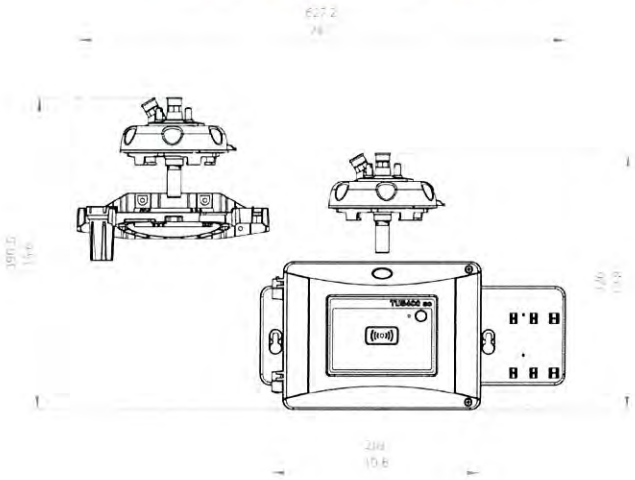

TU5300 sc and TU5400 sc rear view

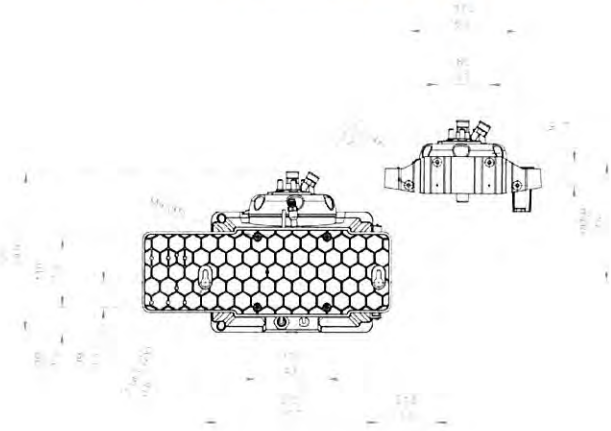

TU5300 sc and TU5400 sc top view

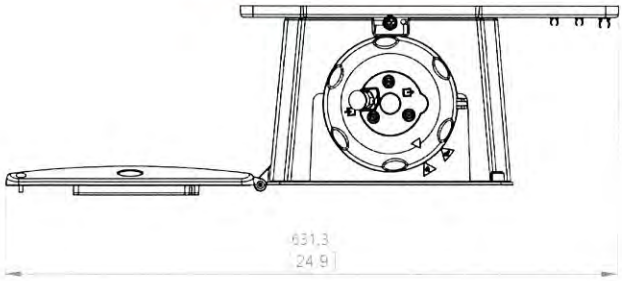

TU5300 sc and TU5400 sc with automatic cleaning module

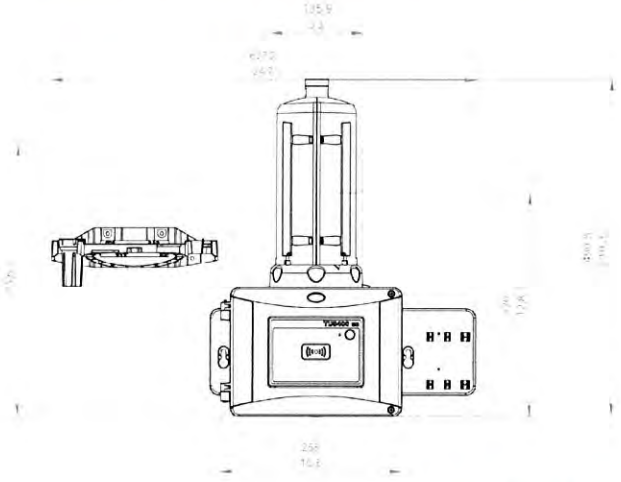

Order Information

TU5200 Benchtop Laser Turbidimeters

LPV442.99.01012	TU5200 Benchtop Laser Turbidimeter with System Check, EPA Version
LPV442.99.03012	TU5200 Benchtop Laser Turbidimeter with System Check and RFID, EPA Version

TU5300 sc/TU5400 sc Online Laser Turbidimeters

LXV445.99.10112	TU5300 sc Low Range Laser Turbidimeter, EPA Version
LXV445.99.10212	TU5400 sc Ultra-High Precision Low Range Laser Turbidimeter, EPA Version
LXV445.99.53112	TU5300sc with Flow Sensor, Automatic Cleaning, RFID, and System Check, EPA Version
LXV445.99.53212	TU5400 sc with Flow Sensor, Automatic Cleaning, RFID, and System Check, EPA Version

Please note: Other turbidimeter configurations are available and RFID may not be available in all areas. Please contact your local Hach representative.





Calibration and Verification

LZY835	StablCal® Calibration Set with RFID
LZY898	StablCal® Calibration Set without RFID
LZY901	Glass Rod Secondary Turbidity Standard <0.1 NTU/FNU
LZY834	Replacement Vial for TU5300 sc and TU5400 sc
LZV946	Sample Vials for TU5200

TU5 Series Accessories

LQV159.99.00002	Automatic Cleaning Module for TU5300 sc and TU5400 sc
LQV160.99.00002	Flow Sensor for TU5300 sc and TU5400 sc
LZY876	Desiccant Cartridge for TU5300 sc and TU5400 sc
LZY907.97.00002	Maintenance Kit for TU5300 sc and TU5400 sc
LQV157.99.40002	SIP10 Sipper Unit for TU5200
LZY903	Manual Vial Wiper for TU5200, TU5300 sc, and TU5400 sc

Service Options

Start-Up:

Instrument start-up, Basic instrument training to help you learn how to use your instrument from the first day you use it.

Service Agreement:

Hach offers a wide range of agreements for bench or field service to help you maximize your measurement reliability and instrument uptime.

Contact us to learn about what Hach Service option is right for you.

DOC050.53.10053.Jul16

HACH COMPANY World Headquarters: Loveland, Colorado USA

United States:	800-227-4224 tel	970-669-2932 fax	orders@hach.com
Outside United States:	970-669-3050 tel	970-461-3939 fax	int@hach.com

hach.com

Printed in U.S.A.
©Hach Company, 2016. All rights reserved.
In the interest of improving and updating its equipment, Hach Company reserves the right to alter specifications to equipment at any time.



Hach® Controllers: Features and Functionality Options



SC200



SC4500

Claros Enabled



SC4500 + MSM

		SC200	SC4500	SC4500 + MSM
Basic Functionality				
Compatible with Hach's Full SC Sensor Portfolio		✓	✓	✓
Analog mA Output to PLC/SCADA		✓	✓	✓
Digital Outputs				
Modbus TCP/IP		✗	✓	✓
Profibus DP		✓	✓	✓
EtherNet/IP		✗	✓	✓
Profinet IO		✗	✓	✓
Sensor Options				
Hach Controller Networking		✗	✓	✓
Embedded Health and Maintenance Alerts		✗	✓	✓
Connected Solutions				
Mobile Sensor Management (MSM)	Remote Visibility & Menu Access	✗	✗	✓
	Maintenance Workflow for Sensors/Analyzers	✗	✗	✓
Remote Service	Compatible w/Instrument Monitoring Partnerships	✗	✗	✓
	Compatible w/ The Plus Program™	✗	✗	✓

Pricing

Item(s)	Part Number	Standard List Price	Limited Time Offer*
Controller only	LXV525.99A1B551	**$3,040**	**$3,040**
Controller + LAN Accessory + MSM	LXV525.99KTO053	**$3,565**	**$3,199**
Controller + Wi-Fi Accessory + MSM	LXV525.99KTO049	**$3,100**	**$2,899**
Controller + Cellular Accessory + Dataplan + MSM	LXV525.99KTO052	**$4,120**	**$2,799** BEST DEAL

*Limited Time Offer valid through 31 December 2021. Included MSM and Dataplan subscriptions are for one year. Included MSM subscriptions are for one sensor.

DOC063.53.30720.Oct21

Performance Curve
EL3050 Rotor Type G

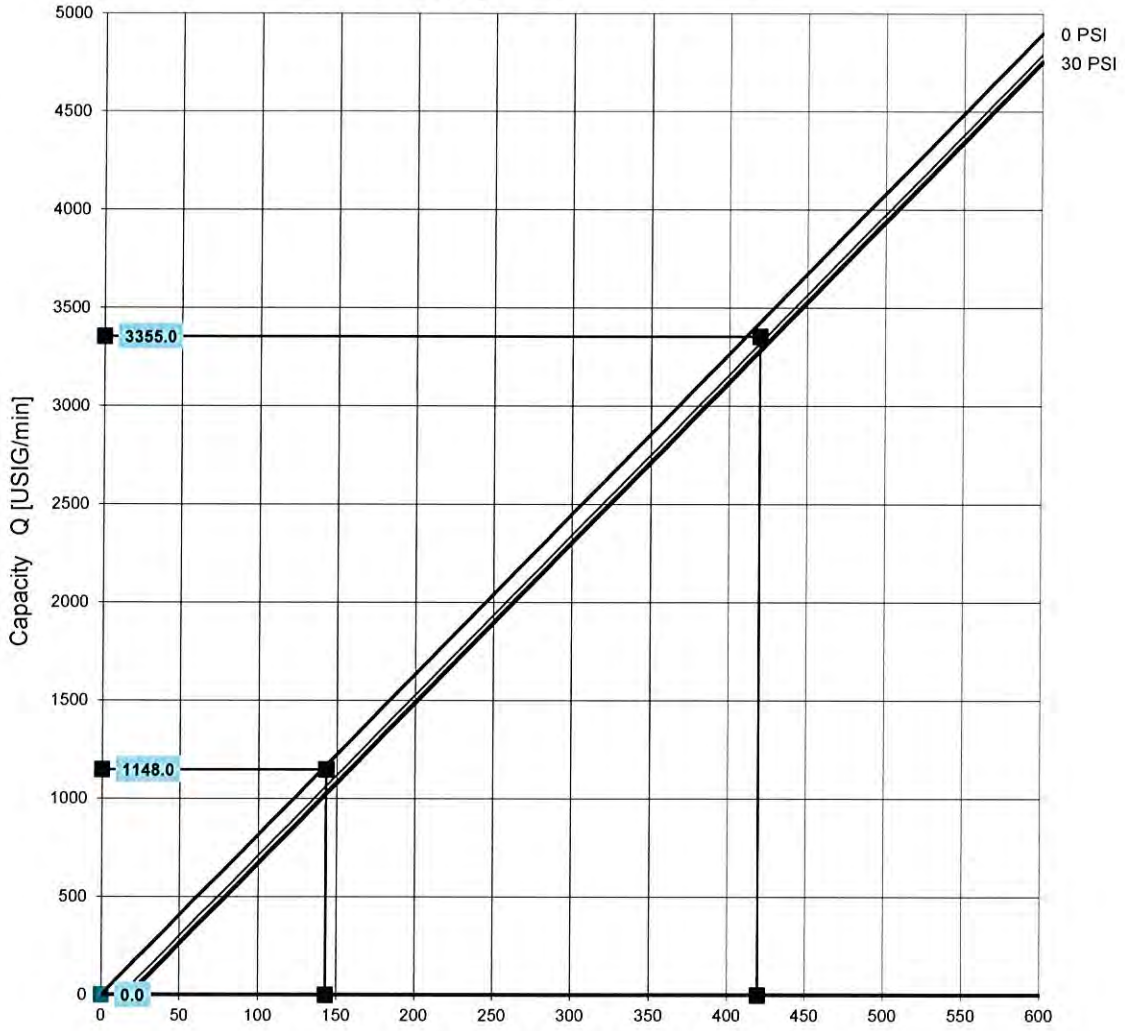

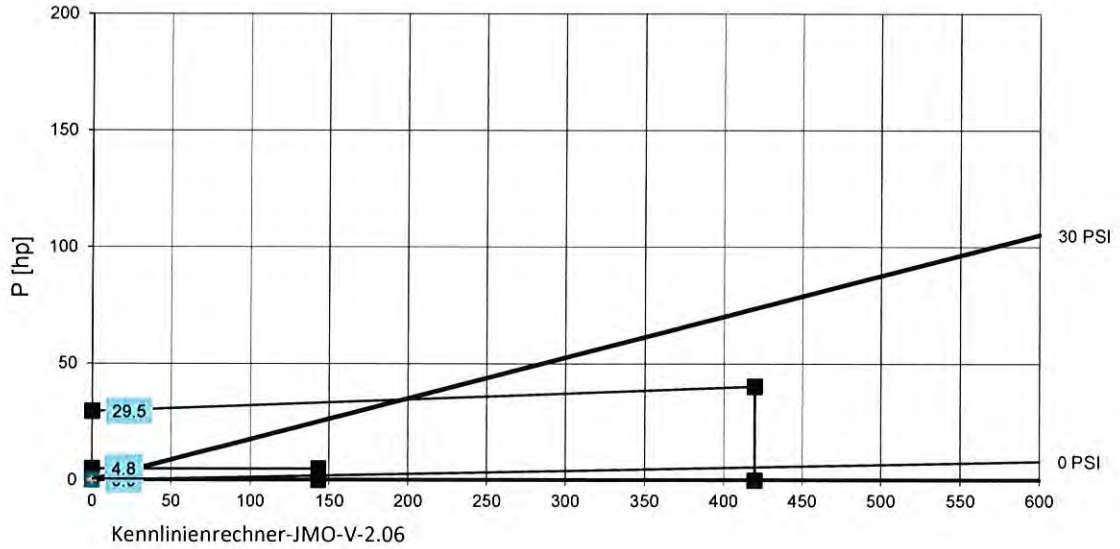

Kennlinienrechner-JMO-V-2.06

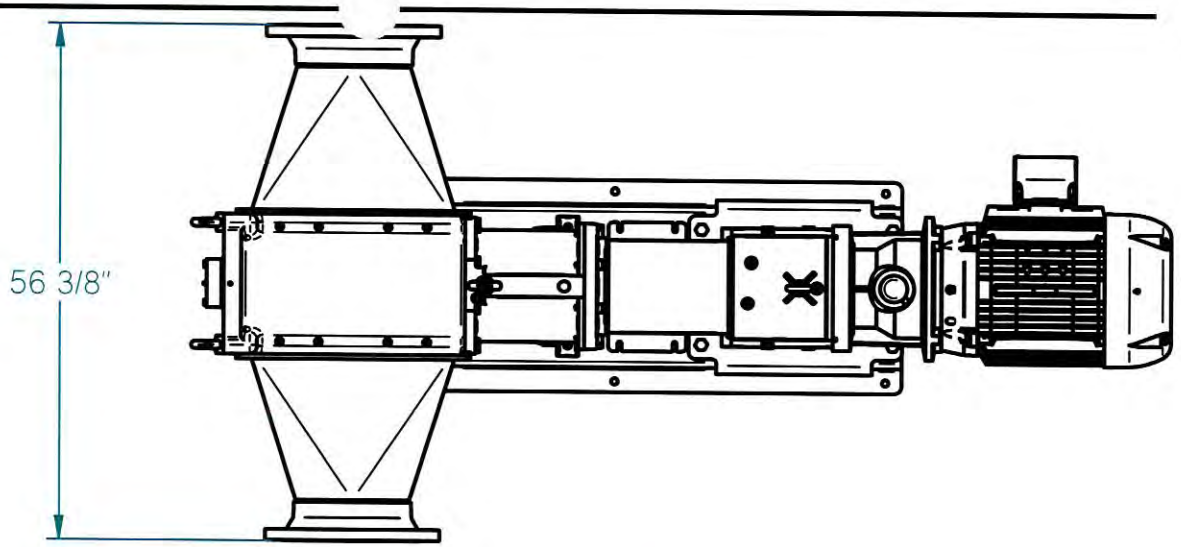

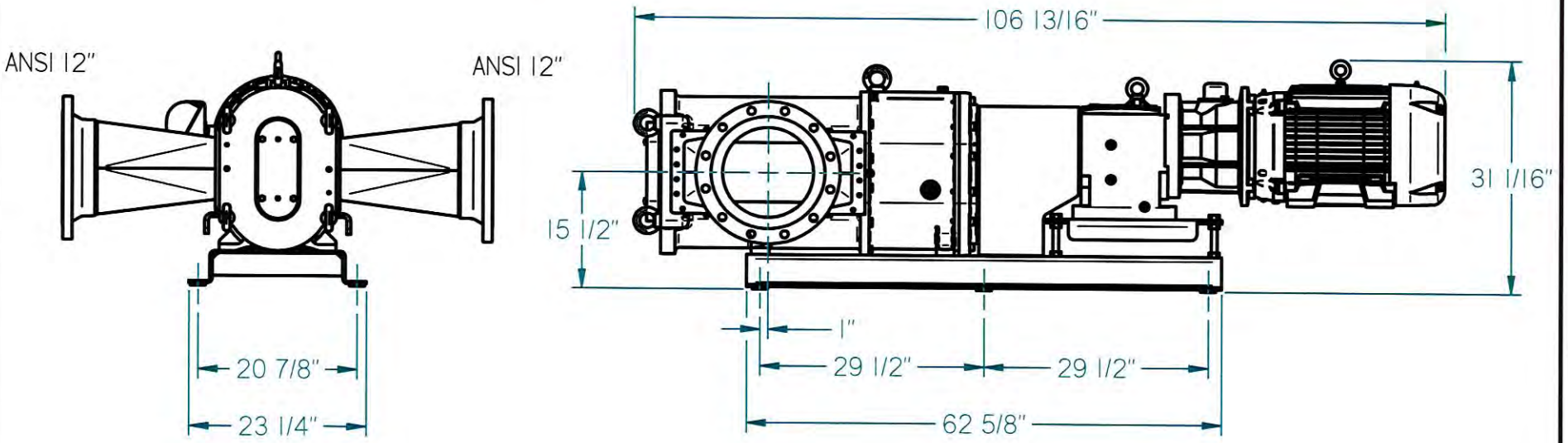

PROPRIETARY AND CONFIDENTIAL
THE INFORMATION CONTAINED IN THIS DRAWING IS THE SOLE PROPERTY OF Boerger, LLC. ANY REPRODUCTION IN PART OR AS A WHOLE WITHOUT THE WRITTEN PERMISSION OF Boerger, LLC IS PROHIBITED.

ALL DIMENSIONS IN INCHES UNLESS OTHERWISE NOTED

TOLERANCES ± 1/2"

DO NOT SCALE DRAWING

BOERGER, LLC
2860 Water Tower Place
Chanhassen, MN 55317
TEL: 612-435-7300
FAX: 612-435-7301

	NAME	DATE
DRAWN	MLindquist	09/22/17
CHECKED		

SHEET 1 OF 1

THIRD ANGLE PROJECTION

BÖRGER®

Model: EL 3050
Gear: Nord - In-Line SK62-320TC
Power: 40 HP CEM4110T

SIZE	DWG. NO.	REV
A	SD-001-534	0

Appendix B – SUEZ Quality Management System Manual and ISO Certifications

Water Technologies & Solutions

Integrated Management System

quality, environmental, health & safety

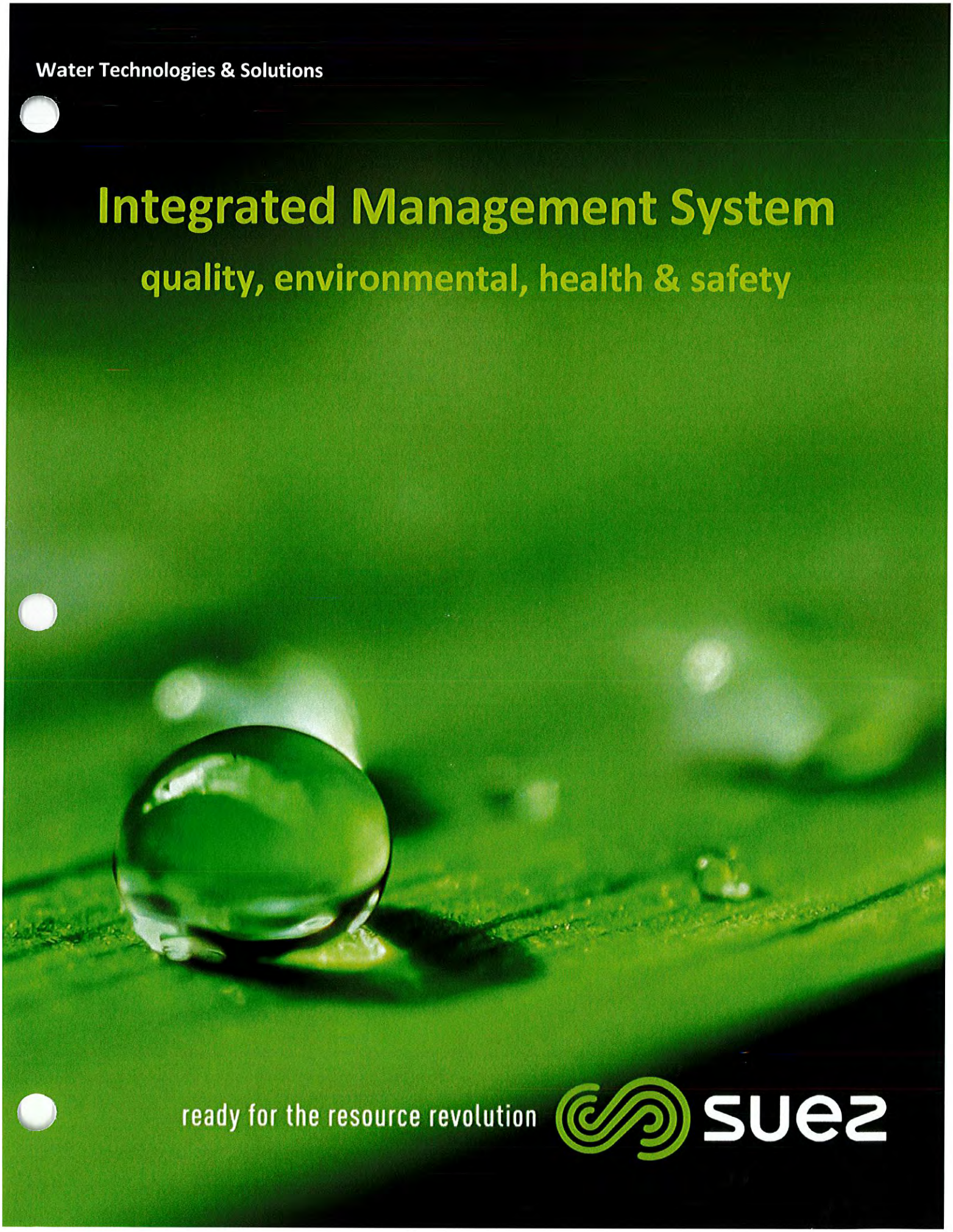

ready for the resource revolution

suez

ready for the resource revolution

In the face of a constantly evolving world with limited natural resources, the SUEZ group is committed to delivering life essential services, protecting water resources, and treating and recovering waste.

SUEZ- Water Technologies & Solutions Vision	3
Our Customer Commitments	4-5
The Quality, Environmental, Health and & Safety Organization	6
The Quality and Environmental, Health & Safety Policies	7
Key Business Processes	8-11
Risk Management	12
Communication and Employee Participation	13
The Integrated Management System	14-23



Find a contact near you by visiting www.suezwatertechnologies.com and clicking on "Contact Us."

*Trademark of SUEZ; may be registered in one or more countries.
©2019 SUEZ. All rights reserved.

Integrated Management System Manual - Version 2.0 May 2019

quality, environment, health and safety vision

SUEZ's Water Technologies & Solutions is committed to the achievement of quality, environment, occupational health and safety excellence.

We are driven by a passion for delivering on our commitments. We are dedicated to providing our customers with the highest quality offerings, customer service and responsiveness to their needs. We are committed to working through any problem in an open and honest manner with unyielding integrity.

The management and control of risks associated with Water Technologies & Solutions facilities is our top priority in our establishment of a preventive culture. We take appropriate measures to prevent workplace injuries and illnesses, to provide workers with a safe and healthy working environment. We accurately assess environmental risks and ensure that our quality systems are effective and well managed.

We have a positive Quality, Environment, Occupational Health and Safety culture. The improvement of our integrated management system is a shared endeavor between workers and the management team, to the benefit of our employees, our customers and our planet.



our customer commitments

Customer Experience Program

- SUEZ's Water Technologies & Solutions is committed to driving customer satisfaction with all products and services we offer and building long-term loyalty by working with our customers to help them be successful.
- We recognize that understanding our customers' experiences is essential for us to optimize those experiences and earn our customers' loyalty. To help us achieve this understanding, we use two types of customer surveys.
- Relationship surveys are conducted periodically on a sample basis to determine overall satisfaction. Transactional surveys are conducted after specific events to determine satisfaction of the interactions related to the specific transaction.



Customer Requirements

- Water Technologies & Solutions understands customer requirements associated with its products and services, their delivery and ongoing support.
- This comes from a deep understanding of the customers' business goals and regulatory commitments, and the intended use of the products and services.
- WTS has established channels for effective communication of customer requirements as well as changes throughout its organization.



Regulations and Standards

- Ensuring compliance with the applicable Regulations and Standards for every region where its products and services are manufactured or operated is of paramount importance to Water Technologies & Solutions.
- Management teams at all levels in the business are engaged in a continually improving process of reviewing the regulatory landscape and understanding technical applicability, training, auditing, and rigorous adherence to policies and procedures. We have the ultimate goal of ensuring that products and services are compliant with the applicable laws and regulations of the region and locally where they are being sold.
- Water Technologies & Solutions understands that its customers count on them to provide products that are compliant and is committed to meeting that expectation.
- All Environmental Health and Safety leaders, in all areas of the business, are engaged in a process of continual improvement in relation to both environment and occupational health and safety. Using guidance, best practice examples and keeping up to date with any changes in the regulatory landscape, we ensure that we are compliant in terms or what we do and how we do it.

the quality, environmental health and safety organization

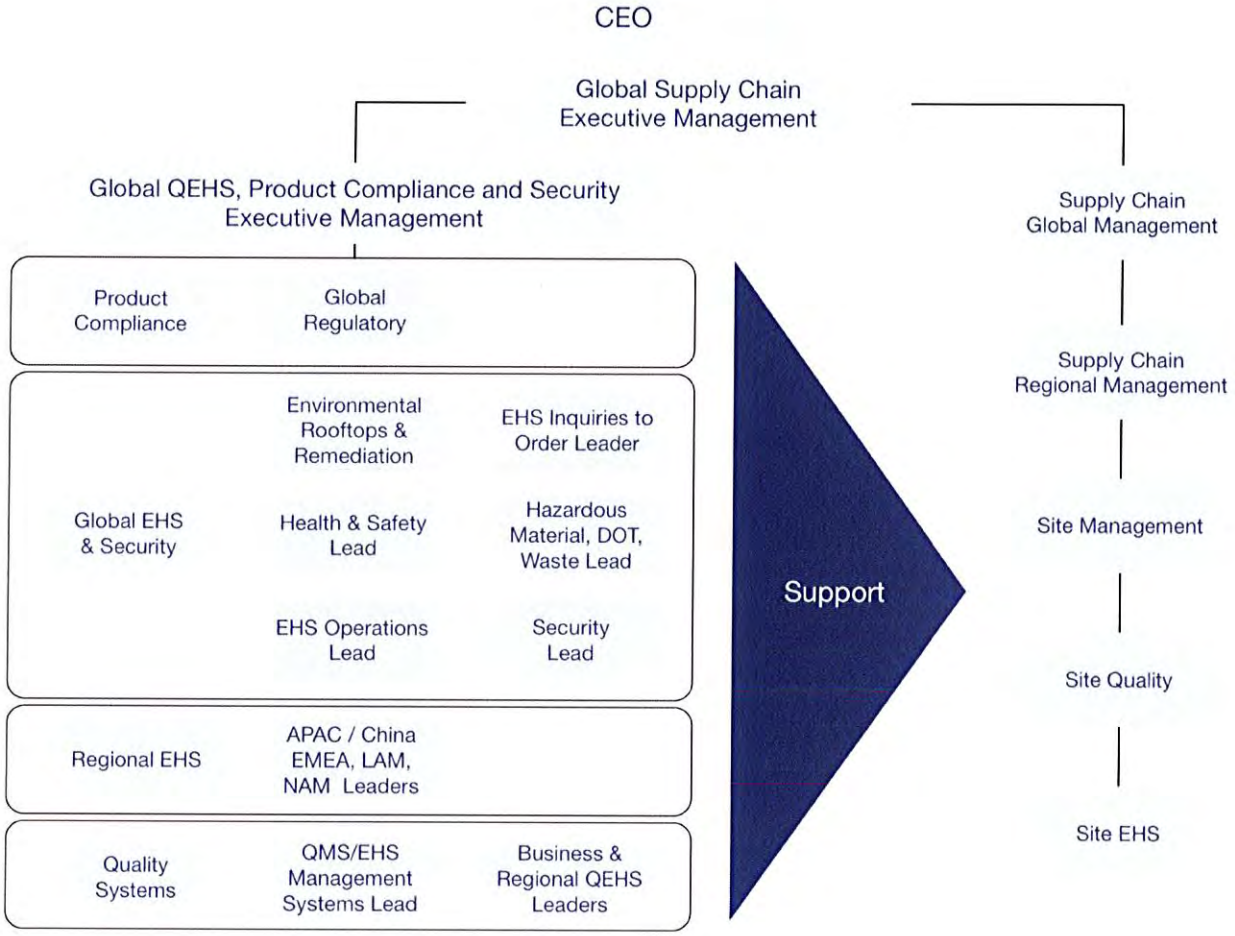

quality, environmental health and safety policies

quality policy

At SUEZ- Water Technologies & Solutions, we are committed to:

- Meeting and exceeding customer expectations
- Improving customer satisfaction and trust
- Delivering our quality products and services on time, in compliance with regulatory and contractual requirements
- Continuously improving the quality of our products, services and processes
- Responding quickly and effectively to resolve issues

Yuvbir Singh
CEO, SUEZ - Water Technologies & Solutions
May 2019

SUEZ

ehs policy

At SUEZ- Water Technologies & Solutions, we are committed to:

- Achieving EHS excellence
- Meeting and exceeding customer expectations
- Complying with applicable EHS laws, regulations & standards
- Providing employees with a safe and healthy working environment
- Considering EHS impacts in all SUEZ's WTS business strategies and initiatives.
- Managing and controlling risks from SUEZ's WTS facilities, products, services and activities
- Protecting the environment by reducing use of toxic and hazardous materials, preventing pollution, and conserving, recovering & recycling materials
- Continuing to improve our EHS systems and performance as an integral part of operational strategy & rhythm
- Eliminate hazards and reduce H&S risks faced by our employees
- Communicate and consult with our employees on the issues that concern them.
- Reporting and auditing our environmental performance to improve accountability
- Implement our 10 Life Saving Rules to avoid severe accidents

SUEZ's Water Technologies and Solutions will strive prevent adverse impact and injury to the environment and the communities in which we do business. Our programs combine clear leadership by management, the participation of all employees, functions, contractors and the use of appropriate technology in developing and distributing SUEZ's WTS products and services.

Yuvbir Singh
CEO, SUEZ - Water Technologies & Solutions
May 2019

SUEZ

key business processes

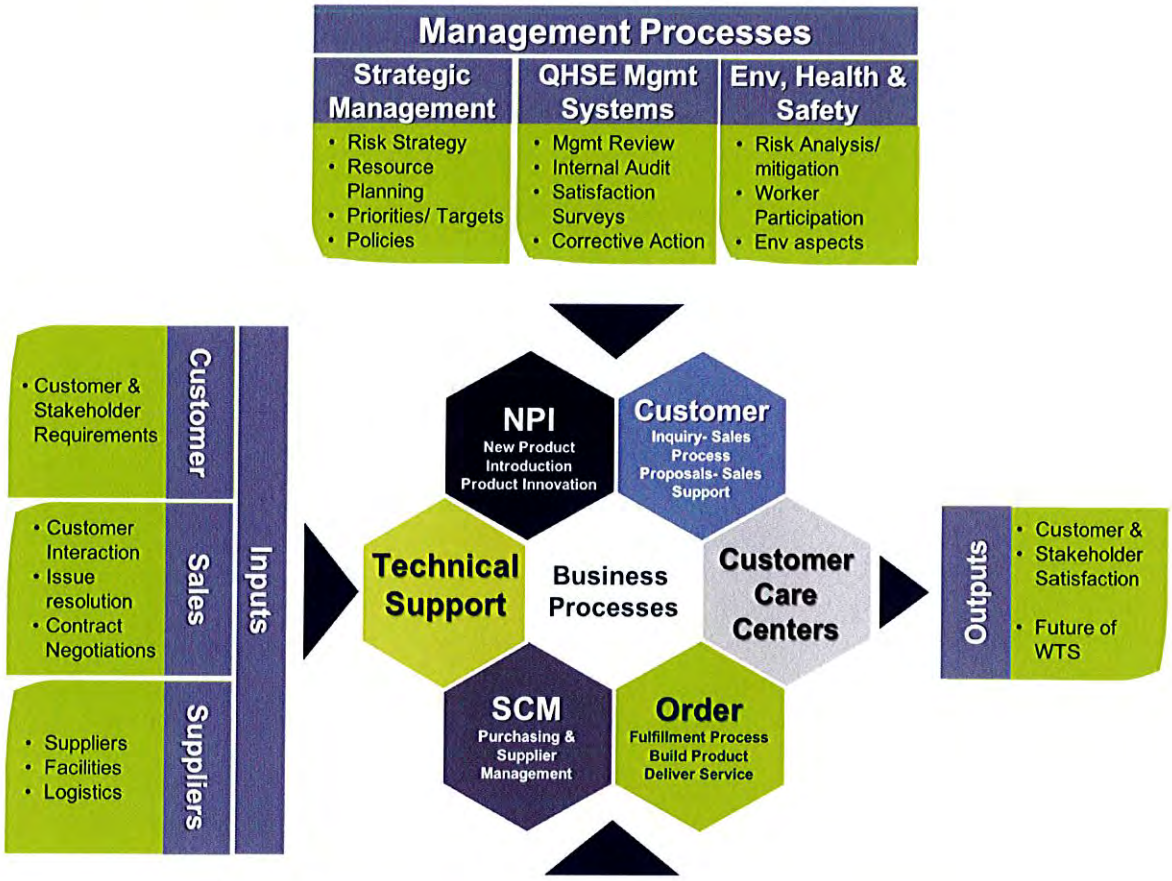

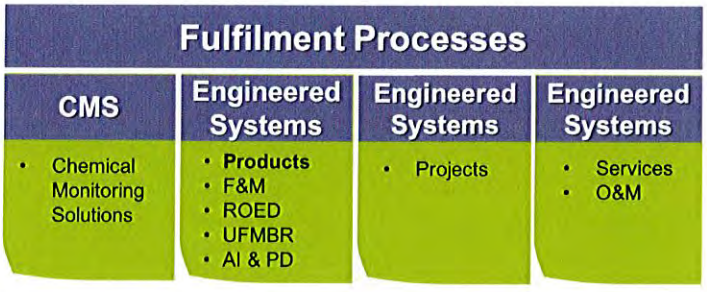

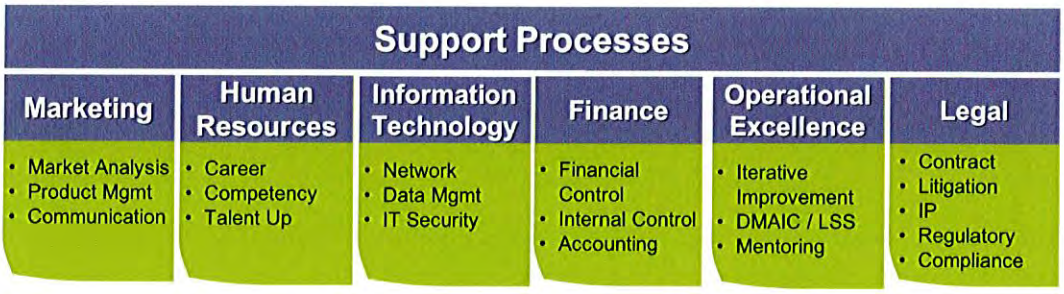

Customer Inquiry-Sales Process

The Customer Inquiry-Sales Process at Water Technologies & Solutions provides a standard and consistent method for developing commercial opportunities. The included risk review process ensures a balance of customer requirements with SUEZ capabilities and the ability to manage any identified risk.

- The Customer Inquiry-Sales Process includes:
  - Opportunity identification and screening
  - Assessment of customer request for quotation and SUEZ's response
  - Risk assessment and approval of initial bid
  - Negotiated scope, price and terms approval
  - Hand-off to the Order-Fulfillment Process

Order Fulfillment Process

The Order Fulfillment process covers the execution of a sales contract form the time that the order is initiated to the time that the final payment is received.

- The Order Fulfillment Process includes:
  - Resource allocation including detailed technical definition as well as planning, and scheduling of equipment, material and human resources
  - Procurement of material resources to complete the order
  - Product realization to transform acquired resources into final product
  - Fulfillment including delivering the product to the customer-specified location and satisfying the terms of the contract
  - Receipt of payment
- Throughout the process, our integrated management system uses control points to verify and validate whether customer, worker and regulatory requirements are met.

New Product Introduction



- The New Product Introduction (NPI) Operating System is an iterative and collaborative business-level approach to creating new products, services and solutions for our customers. It spans the entire product development cycle, from the identification of a new business opportunity to the post commercial introduction. The NPI Operating System is flexible to the unique needs of each project and is applied throughout the businesses, products and services within Water Technology & Solutions.

- Execution teams exist for every defined program. Teams are responsible for achievement of all commercial, environmental, occupational health and safety and technical product objectives, including:
  - Meeting the product development and marketplace introduction schedules
  - Product performance, program cost, product cost, and financial objectives
  - Validation and verification performed throughout the process to confirm product meets requirements
  - Ensuring that our product development process takes adequate consideration of environmental impacts and aspects of the production process and the final product
  - Ensuring our products can be made safely without unnecessary risk to our workers

- Appropriate reviews are utilized to continually assess if the program is fulfilling requirements.

Control of External Providers

Water Technologies & Solutions expects the same high-quality standards from our external suppliers as we do internally. The Sourcing function has established rigorous processes around supplier quality and oversight to enable and verify this quality level for all sourced components, processes and services that may impact our customers' performance including environmental health and safety.

Supplier Approval

Approved to do business with Water Technologies & Solutions:

- Technical Capabilities
- Quality System
- Environmental Health & Safety / Labor
- Know Your Supplier
- Social Responsibility Guidelines

Mutual Non-Disclosure Agreement

- Protects proprietary information for both parties

Integrity Acknowledgement

- Supplier's commitment to comply with SUEZ's requirements

QEHS (Quality, Environmental, Health, Safety) Questionnaire

- Provides basic QEHS data for evaluation of Quality and Environmental Health and Safety practices
- Further local QEHS assessments performed as required

General Supplier Profile

- Basic data to support quality, financial viability and overall risk

Qualification Process

Released for Production:

- Product Compliance
- Process Capability

Critical hardware requires

- Characteristic accountability
- Product quality plan, manufacturing process plan
- Process risk

Team approvals required

- Supplier quality engineer, design engineer, materials engineer (as appropriate)

Surveillance Process

Sustaining Quality, Environmental, Health and Safety:

- Monitoring
- Auditing

Periodic Surveillance Required

- Quality system assessment (if not ISO certified)
- Environmental, Health and Safety systems assessment
- Product / Service audit - compliance to technical requirements
- Process audit - compliance to special processes

Additional audit/inspection requirements defined by:

- Customer requirements, risk, supplier performance, defects

risk management

- Water Technologies & Solutions understands the needs for its risks to be well managed and for its control measures to be proactive rather than reactive. This is important for our workers and for our customers who rely on a healthy, safe workforce and effective, quality processes to deliver their requirements.

- Risk management is achieved through various risk analysis and mitigation strategies incorporated into business processes. Applicable activities include the development of our products and services along with the regulatory compliance strategy, management system process planning, and various transactional business activities.

- The risk management control strategy will be generated by the implementation of the Water Technologies & Solutions Environmental Health and Safety Framework and the implementation of the pertinent statutory provisions relevant to the country where the work is carried out.

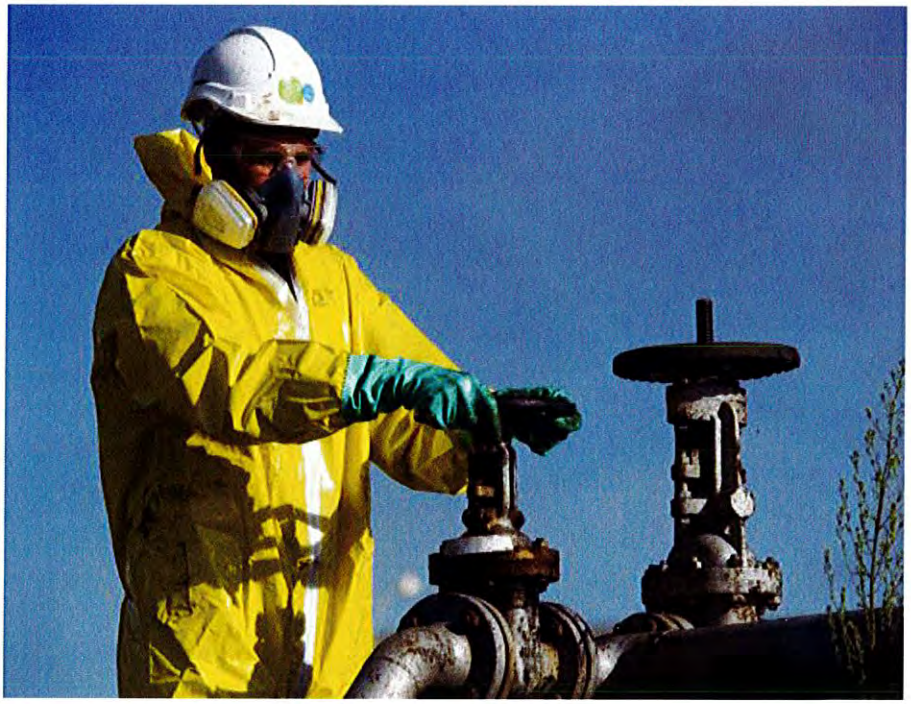

communication and employee participation

- Water Technologies & Solutions have established channels for effective communication with its employees, contractors and other workers to ensure that all parties can be heard on issues relating to Quality, Environment and Occupational Health and Safety.

- Key personnel including product management leaders, technology leaders, quality leaders, environmental health and safety leaders, manufacturing leaders are engaged in a process of continual improvement to:

  - Improve our products and services to meet our customers' changing needs
  - Improve process effectiveness and efficiencies
  - Improve performance related to environmental protections
  - Improve worker safety performance
  - Ensure continued compliance to changes in the product, environmental, health and safety regulations



- The Operation Excellence Team supports improvement activity by training, mentoring and sponsoring leaders for various improvement projects using various improvement techniques including lean six sigma.

- Employee experiential knowledge is vital to the improvement process so workers at all levels of the organization are encouraged to contribute and participate in the continual improvement change process.

- Employee experiential knowledge is vital to the improvement process so workers at levels of the organization are encouraged to participate in improvement projects and are consulted.

the integrated management system (IMS)

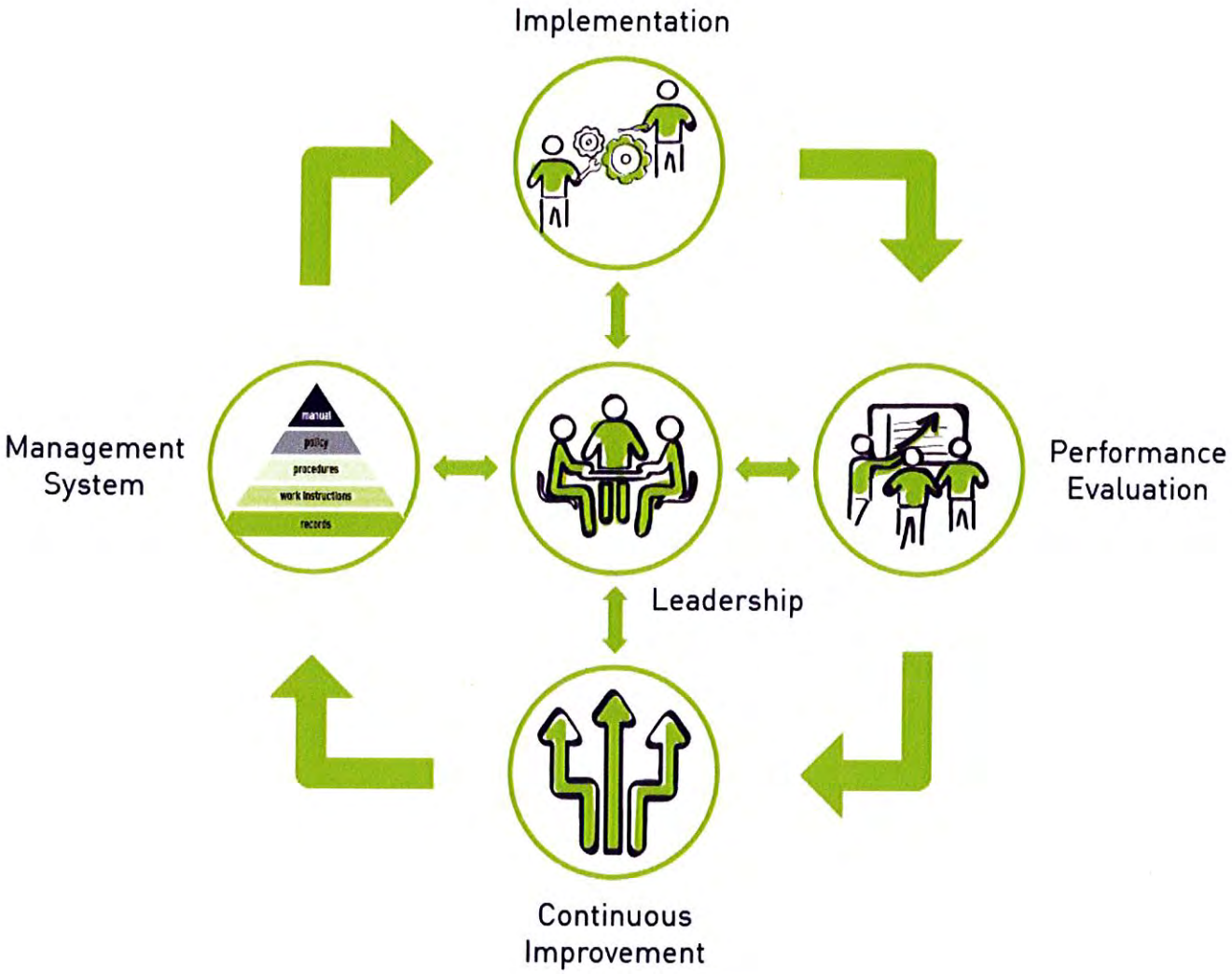

Plan – Do – Check - Act

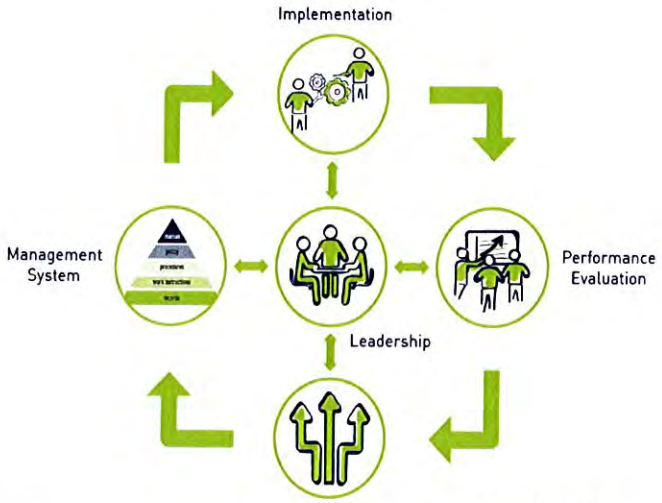

Management System

- Context of the organization
- Interested parties
- Determination of scope
- Planning
- Documented processes
- Documented information
- Record control

Leadership

- Leadership and commitment
- Customer focus
- Policies
- Risk and opportunity
- Objectives
- Strategy
- Roles, responsibilities and authorities
- Consultation and participation of workers

Implementation (Support)

- Resources
- Training, competence, awareness
- Control of monitoring and measuring resources
- Environmental requirements
- Legal and compliance obligations
- Hazard identification
- Emergency preparedness and support

Performance Evaluation

- Monitoring, measurement, analysis and evaluation
- Internal audits
- Management review
- Evaluation of compliance

Implementation (Operation)

- Determination and review of requirements
- Design and development
- Control of externally provided processes, products and services
- Control of -production and service
- Identification and traceability
- Control of nonconforming outputs
- Actions to address risk and opportunities
- Eliminating hazards and reducing health and safety risks

Improvement

- Nonconformity and corrective action
- Continual improvement

Management's Commitment to Quality

Executive leadership at all levels of Water Technologies & Solutions delivers on the commitment to successfully develop and implement the IMS and continually improve its effectiveness by:

- Deploying the quality and environmental health and safety policies
- Establishing measurable objectives that enable improvement in environmental protection, worker safety and enhanced customer satisfaction
- Communicating to the business the importance of meeting customer and regulatory requirements
- Conducting management reviews at appropriate levels within the organization
- Performing risk and opportunity reviews to establish and deploy business strategies
- Participating in case reviews where we have failed to meet our high standards in occupational health and safety
- Ensuring the business has the resources it needs to achieve the goals of the integrated management system

Management Review

Review topics include:

- Customer satisfaction and feedback from relevant interested parties
- Changes in internal and external issues relevant to the management system
- Process performance and product conformity
- Information on management system performance including monitoring and measuring results and evaluation of compliance with legal requirements
- Audit results
- Performance of external providers
- Adequacy of resources
- Effectiveness of actions taken to address risk and opportunities
- Opportunities for improvement

Business segments, functional groups hold routine operational and strategic reviews to ensure alignment to customer requirements and priorities.

Documented Information

Water Technologies & Solutions utilizes a tiered approach to Documented Information. Global quality system documents provide the structural requirements for an effective quality management system. Sub-business and local documents supplement the global requirements when required to ensure business specific requirements are effectively addressed.

Global document control requirements include:

- Identification
- Review and approval
- Revision control
- Internal and external documents
- Communication, accessibility, confidentiality

Global quality record control requirements include:

- Identification
- Traceability
- Legibility
- Retrieval
- Protection
- Retention and disposition requirements



Training and People

- Water Technologies & Solutions assigns resources to plan and develop our integrated management system and its processes to ensure we satisfy our customers with our delivered product and services.
- Our stringent hiring process ensures that successful applicants are qualified with identified required competencies.
- The SUEZ internal educational programs provide online employee development courses to help employees develop their skills and realize their career aspirations.
- The SUEZ employee and talent review process formalizes ongoing manager-employee interaction to identify and monitor annual objectives, performance and competency.
- The SUEZ employee and talent review process enable effective management of Environmental, Health and Safety competencies through the automatic assignment and tracking of mandatory training requirements based on job category.

Auditing

Focus for Internal Audits

- Compliance with Water Technologies & Solutions' Integrated Management System requirements.
- Test effectiveness of processes to ensure intended results are achieved.
- Planning based on the maturity and importance of the process, as well as results of previous audits.
- Audit results, including timeliness and effectiveness of corrective actions, are reviewed by relevant management.

Control of Nonconforming Outputs

- An output is considered to be nonconforming when it does not meet specified requirements. Nonconforming outputs are controlled to prevent their unintended use or delivery and the situation is resolved so that requirements are met.

- When the nonconforming output involves tangible material, a formal nonconforming material process is followed to ensure the following controls are in place when they are applicable:

    - Identification and segregation (if possible)
    - Containment
    - Communication to interested parties
    - Authorization for acceptance under concession
    - Documentation of the nonconformity including its resolution and identification of deciding authorities

- Field issues related to our products and services are tracked using issue tracking applications that facilitate collaboration with relevant team members to achieve resolution. Impact screening and trending analysis is used to escalate specific issues, or issue types, to the continuous improvement system where formal root cause analysis and corrective action protocols are followed.

- When an incident or nonconformity is related to an environmental or health and safety circumstance, immediate, necessary action is taken to deal with the situation. This is followed by thorough investigations to identify risks and opportunities. Corrective actions are verified for effectiveness and significant learnings are shared across the business.

Control of Monitoring and Measuring Resources

- Water Technologies & Solutions' monitoring and measuring resource control program includes measuring instruments, software measurement standards and reference material. The control program supports the measuring and monitoring activity for equipment, processes, products and services. This helps ensure the quality of product and service delivery, and compliance to environmental, health and safety commitments.
- The measuring resources are suitable for their assigned purpose and they are protected and maintained to ensure their continuing fitness for use.
- Water Technologies & Solutions maintains a comprehensive calibration program for when measurement traceability is a requirement or is considered essential to provide confidence in the validity of results.
- Each measuring and monitoring resource in the calibration program is uniquely identified to provide traceability to its calibration schedule and records.
- As appropriate, calibrations performed are traceable to International or National Standards, as defined in the calibration program.



Monitoring and Measurement

- Groups within Water Technologies & Solutions define and implement monitoring and measurement needed to demonstrate conformity of product and the integrated management system, and to identify opportunities for improvement by:
  - Setting specific and measurable quality, environmental, health and safety objectives and establishing review rhythms to verify performance
  - Verifying that product requirements are met at the appropriate stages of production and/or service provision through in-process inspection and testing
  - Verifying that throughout all production stages and during operation and maintenance of equipment environmental, health and safety requirements are met



Corrective Action

- To drive effective corrective action, Water Technologies & Solutions has implemented several business process specific systems to track and monitor progress on resolution of issues.

- Issue resolution is strongly linked to our organization's commitment to continually improve its products, services, processes and performance. The established Continuous Improvement process defines requirements for:
  - Screening nonconformities and non-compliances, including environmental health and safety concerns, customer complaints, warranty issues to ensure the resolution rigour is appropriate for the nature and scale of the issue
  - Analyzing and determining the causes of nonconformities and non-compliances
  - Evaluating the need for corrective action to prevent occurrence in related areas
  - Determining and implementing the actions needed
  - Verifying the effectiveness of the actions taken



Continuous Improvement

- Water Technologies & Solutions continually improves the effectiveness of its IMS through:
  - Its quality, environmental and occupational health and safety policies
  - Creation and monitoring of objectives and targets linked to quality, environment and occupational health and safety
  - Soliciting customer feedback and engaging in consultation processes with our workers
  - Ensuring we are meeting our legal obligations
  - Engaging in hazard identification, risk analysis and strategic planning activities
  - Developing significant aspects and impacts with periodic review
  - Risk Analysis and Strategic Planning
  - Implementation and verification of corrective actions
  - Completion of internal audits
  - Execution of management review
- Water Technologies & Solutions utilizes various process improvement methodologies along with traditional quality management activities to drive improvements.



Integrated Management System Manual Approval

Name	Title	Integrated Management System Manual Version	Release Date	Signature
Kristin Mortensen	WTS Global ISO Leader	2.0	May 2019	Kristin Mortensen



Current issue date:	6 March 2020	Original approval(s):
Expiry date:	22 November 2021	ISO 14001 - 20 December 2019
Certificate identity number:	10252093	ISO 9001 - 28 December 1999

Lloyd's Register

Certificate Schedule

This is to certify that the Management System of:

SUEZ Water Technologies & Solutions

4636 Somerton Road, Trevose, PA, 19053, United States

has been approved by Lloyd's Register to the following standards:

ISO 14001:2015, ISO 9001:2015

Approval number(s): ISO 14001 – 00023378, ISO 9001 – 0011964

This certificate is valid only in association with the certificate schedule bearing the same number on which the locations applicable to this approval are listed.

The scope of this approval is applicable to:
Research & Development, Sales, Onsite Product and Application Support, Commercial Operations, Customer Care, Design, Engineering, Project Management, Procurement, Manufacturing, Assembly, Warehousing, Installation, Commissioning, Laboratory Analysis, Remote Technical Support, Field Service and Support, Remote Monitoring, Diagnostics and Analytics, Water Treatment Equipment, Mobile Water Treatment Equipment, Operation and Maintenance of Water Treatment Plants, Anaerobic Digestion Technologies, Analytical Laboratory Process Control Instruments, Distribution of Analytical Reagents and Reference Standards, Manufacture and Distribution of Water Treatment Chemicals as Applicable to the Following Industries: Chemical Processing, Facilities, Refining, Food & Beverage, Microelectronics, Metals & Mining, Municipal, Pharma & Life Sciences, Power, Pulp & Paper, Upstream Oil & Gas and others in need of Water and Process Treatment Solutions.

Cliff Muckleroy

Area Operations Manager Americas

Issued by: Lloyd's Register Quality Assurance, Inc.

for and on behalf of: Lloyd's Register Quality Assurance Limited

ANAB ACCREDITED ISO/IEC 17021 MANAGEMENT SYSTEMS CERTIFICATION BODY

Lloyd's Register Group Limited, its affiliates and subsidiaries, including Lloyd's Register Quality Assurance Limited (LRQA), and their respective officers, employees or agents are, individually and collectively, referred to in this clause as 'Lloyd's Register'. Lloyd's Register assumes no responsibility and shall not be liable to any person for any loss, damage or expense caused by reliance on the information or advice in this document or howsoever provided, unless that person has signed a contract with the relevant Lloyd's Register entity for the provision of this information or advice and in that case any responsibility or liability is exclusively on the terms and conditions set out in that contract.
Issued by: Lloyd's Register Quality Assurance, Inc., 1330 Enclave Parkway, Suite 200, Houston, Texas 77077, United States for and on behalf of: Lloyd's Register Quality Assurance Limited, 1 Trinity Park, Bickenhill Lane, Birmingham B37 7ES, United Kingdom

Lloyd's Register

Certificate Schedule

Location	Activities
Head Office 4636 Somerton Road, Trevose, PA, 19053, United States	**ISO 14001:2015** Manufacture of Water and Process Treatment Chemicals including Water Test Kits, Reagents and Treatment Chemical Control Systems. **ISO 9001:2015** Chemical Monitoring Solutions Activities includes Research & Development, Manufacturing of Chemicals and Equipment for Water Treatment Programs including Support by Research & Development Laboratories, Product Compliance Laboratories and Field Service Activities. The Service Reliability Center Provides Remote Monitoring and Diagnostics of Customer Processes. The Services Team Activities includes Assembly, Installation, Servicing of Water Treatment Systems for Industrial Applications.
29 Royal Road, Guelph, N1H 1G2, Ontario, Canada	**ISO 9001:2015** Manufacture of Equipment for Water, Wastewater Treatment Processes.
3239 Dundas Street West, Oakville, L6M 4B2, Canada	**ISO 9001:2015** Engineered Systems Activities include Research and Development, Design, Sales, Project Management, Service of Membranes and Equipment for Water, Wastewater and Industrial Water Treatment. Chemical Monitoring Activities Include Warehousing, Distribution of Chemicals and Customer Care.

ANAB ACCREDITED ISO/IEC 17021 MANAGEMENT SYSTEMS CERTIFICATION BODY

Lloyd's Register Group Limited, its affiliates and subsidiaries, including Lloyd's Register Quality Assurance Limited (LRQA), and their respective officers, employees or agents are, individually and collectively, referred to in this clause as 'Lloyd's Register'. Lloyd's Register assumes no responsibility and shall not be liable to any person for any loss, damage or expense caused by reliance on the information or advice in this document or howsoever provided, unless that person has signed a contract with the relevant Lloyd's Register entity for the provision of this information or advice and in that case any responsibility or liability is exclusively on the terms and conditions set out in that contract.
Issued by: Lloyd's Register Quality Assurance, Inc., 1330 Enclave Parkway, Suite 200, Houston, Texas 77077, United States for and on behalf of: Lloyd's Register Quality Assurance Limited, 1 Trinity Park, Bickenhill Lane, Birmingham B37 7ES, United Kingdom

Lloyd's Register

Certificate Schedule

Location	Activities
Bonaventure Industrial Park, 13030 148th Street, Edmonton, Alberta, T5L 2H8, Canada	**ISO 14001:2015** Manufacture of Water and Process Treatment Chemicals. **ISO 9001:2015** Chemical Monitoring Solutions Activities includes Manufacture and Distribution of Chemicals.
1295 Cormorant Road Suite 200, Ancaster, L9G 4V5, ONT, Canada	**ISO 9001:2015** Design, Implementation and Sale of Water Treatment Facilities. Operation and Maintenance of Water Treatment Facilities, Plus Related Services. Innovation, Marketing, Design, Implementation, Manufacturing and Sale of Installations and Equipment, Plus Services. Elaboration and Management of Investment Operations for Water Treatment Plants Under BOT Contract.
1290 Avenue Van Horne Bureau 310, Montreal, H2V 4S2, QUE, Canada	**ISO 9001:2015** Innovation, Marketing, Design and Sale of Installations and Equipment, Plus Services.
1145 rue Jean-Marchand, Levis, G6Y 9G5, QUE, Canada	**ISO 9001:2015** Implementation, Manufacturing of Installations and Equipment, Plus Services.

ANAB ACCREDITED ISO/IEC 17021 MANAGEMENT SYSTEMS CERTIFICATION BODY

Lloyd's Register Group Limited, its affiliates and subsidiaries, including Lloyd's Register Quality Assurance Limited (LRQA), and their respective officers, employees or agents are, individually and collectively, referred to in this clause as 'Lloyd's Register'. Lloyd's Register assumes no responsibility and shall not be liable to any person for any loss, damage or expense caused by reliance on the information or advice in this document or howsoever provided, unless that person has signed a contract with the relevant Lloyd's Register entity for the provision of this information or advice and in that case any responsibility or liability is exclusively on the terms and conditions set out in that contract.
Issued by: Lloyd's Register Quality Assurance, Inc., 1330 Enclave Parkway, Suite 200, Houston, Texas 77077, United States for and on behalf of: Lloyd's Register Quality Assurance Limited, 1 Trinity Park, Bickenhill Lane, Birmingham B37 7ES, United Kingdom

Certificate Schedule

Location	Activities
5490 Boulevard Thimens Bureau 100, Saint-Laurent, H4R 2K9, QC, Canada	**ISO 9001:2015** Design, Implementation and Sale of Water Treatment Facilities. Operation and Maintenance of Water Treatment Facilities, Plus Related Services. Innovation, Marketing, Design, Implementation, Manufacturing and Sale of Installations and Equipment, Plus Services. Elaboration and Management of Investment Operations for Water Treatment Plants Under BOT Contract.
SUEZ Water Technologies & Solutions Analytical Instruments Vigado utca 2011 hrsz., 2800 Tatabanya, Komarom Esztergom, Hungary 0011964-002	**ISO 9001:2015** Shipping and Distribution and Servicing of Analytical Laboratory and Process Control Instruments, Including Manufacturing and Distribution of Analytical Reagents and Reference Standards.
10658 Highway 90 West, Beaumont, TX, 77713, United States	**ISO 14001:2015** Manufacture of Water and Process Treatment Chemicals. **ISO 9001:2015** Chemical Monitoring Solutions Activities includes Manufacture and Distribution of Chemicals.
2118 Reiser Avenue South East, New Philadelphia, OH, 44663, United States	**ISO 14001:2015** Manufacture of Water and Process Treatment Chemicals. **ISO 9001:2015** Chemical Monitoring Solutions Activities includes Manufacture and Distribution of Chemicals.

Lloyd's Register Group Limited, its affiliates and subsidiaries, including Lloyd's Register Quality Assurance Limited (LRQA), and their respective officers, employees or agents are, individually and collectively, referred to in this clause as 'Lloyd's Register'. Lloyd's Register assumes no responsibility and shall not be liable to any person for any loss, damage or expense caused by reliance on the information or advice in this document or howsoever provided, unless that person has signed a contract with the relevant Lloyd's Register entity for the provision of this information or advice and in that case any responsibility or liability is exclusively on the terms and conditions set out in that contract.
Issued by: Lloyd's Register Quality Assurance, Inc., 1330 Enclave Parkway, Suite 200, Houston, Texas 77077, United States for and on behalf of: Lloyd's Register Quality Assurance Limited, 1 Trinity Park, Bickenhill Lane, Birmingham B37 7ES, United Kingdom

Certificate Schedule

Location	Activities
3050 Pegasus Road, Bakersfield, CA, 93308, United States	**ISO 14001:2015** Manufacture of Water and Process Treatment Chemicals. **ISO 9001:2015** Chemical Monitoring Solutions Activities includes Manufacture and Distribution of Chemicals. The Services Team Involves Installation, Servicing and Operation of Water Treatment Systems for Industrial Applications.
333 South Lombard Road, Addison, IL, 60101, United States	**ISO 14001:2015** Manufacture of Water and Process Treatment Chemicals. **ISO 9001:2015** Chemical Monitoring Solutions Activities includes Manufacture and Distribution of Chemicals.
3600 Progress Drive, Suite 300, Bensalem, PA, 19020, United States	**ISO 9001:2015** Warehouse and Distribution of Chemicals.
3901 Williams Drive, Orange, TX, 77630, United States	**ISO 14001:2015** Manufacture of Water and Process Treatment Chemicals. **ISO 9001:2015** Chemical Monitoring Solutions Activities includes Manufacture and Distribution of Chemicals.

Lloyd's Register Group Limited, its affiliates and subsidiaries, including Lloyd's Register Quality Assurance Limited (LRQA), and their respective officers, employees or agents are, individually and collectively, referred to in this clause as 'Lloyd's Register'. Lloyd's Register assumes no responsibility and shall not be liable to any person for any loss, damage or expense caused by reliance on the information or advice in this document or howsoever provided, unless that person has signed a contract with the relevant Lloyd's Register entity for the provision of this information or advice and in that case any responsibility or liability is exclusively on the terms and conditions set out in that contract.
Issued by: Lloyd's Register Quality Assurance, Inc., 1330 Enclave Parkway, Suite 200, Houston, Texas 77077, United States for and on behalf of: Lloyd's Register Quality Assurance Limited, 1 Trinity Park, Bickenhill Lane, Birmingham B37 7ES, United Kingdom

Lloyd's Register

Certificate Schedule

Location	Activities
5951 Clearwater Drive, Minnetonka, MN, 55343, United States	**ISO 9001:2015** Engineered System Activities includes Design and Manufacture of Filters, Membranes and Equipment for Water, Wastewater Treatment and Desalination Systems. Service Activities Includes Provision of Technical Support to Suez Water Technologies & Solutions Customers.
3006 Northup Way, Suite 200, Bellevue, WA, 98004, United States	**ISO 9001:2015** Design, Project Management, Procurement, Commissioning and Service of Water Treatment Equipment for Water, Wastewater and Desalination Processes.
11113 NE 33rd Place, Bellevue, WA, 98004, United States	**ISO 9001:2015** Warehouse and QC Laboratory.
4545 Patent Road, Norfolk, VA, 23502, United States	**ISO 9001:2015** The Design, Installation, Servicing and Operation of Water Treatment Systems for Industrial Applications.
Fontana Service Center 11689 Pacific Avenue, Fontana, CA, 92337, United States	**ISO 9001:2015** The Installation, Servicing and Operation of Water Treatment Systems for Industrial Applications.
Saint Peters Service Center No. 2 Arrowhead Industrial Boulevard, Saint Peters, MO, 63376, United States	**ISO 9001:2015** The Installation, Servicing and Operation of Water Treatment Systems for Industrial Applications.

ANAB ACCREDITED ISO/IEC 17021 MANAGEMENT SYSTEMS CERTIFICATION BODY

Lloyd's Register Group Limited, its affiliates and subsidiaries, including Lloyd's Register Quality Assurance Limited (LRQA), and their respective officers, employees or agents are, individually and collectively, referred to in this clause as 'Lloyd's Register'. Lloyd's Register assumes no responsibility and shall not be liable to any person for any loss, damage or expense caused by reliance on the information or advice in this document or howsoever provided, unless that person has signed a contract with the relevant Lloyd's Register entity for the provision of this information or advice and in that case any responsibility or liability is exclusively on the terms and conditions set out in that contract.
Issued by: Lloyd's Register Quality Assurance, Inc., 1330 Enclave Parkway, Suite 200, Houston, Texas 77077, United States for and on behalf of: Lloyd's Register Quality Assurance Limited, 1 Trinity Park, Bickenhill Lane, Birmingham B37 7ES, United Kingdom

Lloyd's Register

Certificate Schedule

Location	Activities
4200 Oscar Nelson Jr Drive, Baytown, TX, 77520, United States	**ISO 9001:2015** The Installation, Servicing and Operation of Water Treatment Systems for Industrial Applications.
405 School Street, East Hartford, CT, 06108, United States	**ISO 9001:2015** The Installation, Servicing and Operation of Water Treatment Systems for Industrial Applications.
Phoenix Service Center 4101 East Wood Street, Phoenix, AZ, 85040, United States	**ISO 9001:2015** The Installation, Servicing and Operation of Water Treatment Systems for Industrial Applications.
Pico Rivera Service Center 7777 Industry Avenue, Pico Rivera, CA, 90660, United States	**ISO 9001:2015** The Installation, Servicing and Operation of Water Treatment Systems for Industrial Applications.
San Jose Service Center 5900 Silver Creek Valley Road, San Jose, CA, 95138, United States	**ISO 9001:2015** The Assembly, Installation, Servicing and Operation of Water Treatment Systems for Industrial Applications.
SUEZ Water Technologies & Solutions Analytical Instruments 6060 Spine Road, Boulder, CO, 80301, United States 0011964-002	**ISO 9001:2015** The Design, Development, Production, Servicing and Distribution of Analytical Laboratory and Process Control Instruments, Including Manufacture of Analytical Reagents and Reference Standards.
21222 Spell Circle, Tomball, TX, 77375, United States	**ISO 9001:2015** Laboratory and Analytical Services for Water and Process System Solutions.

ANAB ACCREDITED ISO/IEC 17021 MANAGEMENT SYSTEMS CERTIFICATION BODY

Lloyd's Register Group Limited, its affiliates and subsidiaries, including Lloyd's Register Quality Assurance Limited (LRQA), and their respective officers, employees or agents are, individually and collectively, referred to in this clause as 'Lloyd's Register'. Lloyd's Register assumes no responsibility and shall not be liable to any person for any loss, damage or expense caused by reliance on the information or advice in this document or howsoever provided, unless that person has signed a contract with the relevant Lloyd's Register entity for the provision of this information or advice and in that case any responsibility or liability is exclusively on the terms and conditions set out in that contract.
Issued by: Lloyd's Register Quality Assurance, Inc., 1330 Enclave Parkway, Suite 200, Houston, Texas 77077, United States for and on behalf of: Lloyd's Register Quality Assurance Limited, 1 Trinity Park, Bickenhill Lane, Birmingham B37 7ES, United Kingdom

Lloyd's Register

Certificate Schedule

Location	Activities
8007 Discovery Drive, Richmond, VA, 23229, United States	**ISO 9001:2015** Design, Implementation and Sale of Water Treatment Facilities. Operation and Maintenance of Water Treatment Facilities, Plus Related Services. Innovation, Marketing, Design, Implementation, Manufacturing and Sale of Installations and Equipment, Plus Services. Elaboration and Management of Investment Operations for Water Treatment Plants Under BOT Contract.
600 Willow Tree Road, Leonia, NJ, 07605, United States	**ISO 9001:2015** Design, Implementation and Sale of Water Treatment Facilities. Operation and Maintenance of Water Treatment Facilities, Plus Related Services. Innovation, Marketing, Design, Implementation, Manufacturing and Sale of Installations and Equipment, Plus Services. Elaboration and Management of Investment Operations for Water Treatment Plants Under BOT Contract.
10991 Leadbetter Road, Ashland, VA, 23005, United States	**ISO 9001:2015** Research & Development, Laboratory Analysis, Pilot Plants and Materials Management for Water, Wastewater and Biosolid Treatment Equipment and Systems Including Lifecycle Support.
10989 Leadbetter Road, Ashland, VA, 23005, United States	**ISO 9001:2015** Warehouse.
B Block - C Area, No. 1 XiXia Road, Mechanical & Electrical Zone, Wuxi New District, Jiangsu Province, China	**ISO 14001:2015** Manufacture of Chemicals, Equipment, Membranes, and Analytical Instruments for Water and Process System Solutions.

ANAB ACCREDITED ISO/IEC 17021 MANAGEMENT SYSTEMS CERTIFICATION BODY

Lloyd's Register Group Limited, its affiliates and subsidiaries, including Lloyd's Register Quality Assurance Limited (LRQA), and their respective officers, employees or agents are, individually and collectively, referred to in this clause as 'Lloyd's Register'. Lloyd's Register assumes no responsibility and shall not be liable to any person for any loss, damage or expense caused by reliance on the information or advice in this document or howsoever provided, unless that person has signed a contract with the relevant Lloyd's Register entity for the provision of this information or advice and in that case any responsibility or liability is exclusively on the terms and conditions set out in that contract.
Issued by: Lloyd's Register Quality Assurance, Inc., 1330 Enclave Parkway, Suite 200, Houston, Texas 77077, United States for and on behalf of: Lloyd's Register Quality Assurance Limited, 1 Trinity Park, Bickenhill Lane, Birmingham B37 7ES, United Kingdom

Lloyd's Register

Certificate Schedule

Location	Activities
53-C Hoskote Industrial Area, Chintamani Road, Hoskote, Bangalore, 562114, India	**ISO 14001:2015** Manufacture of Water and Process Treatment Chemicals.
605 Bungi, Yongje-dong, Iksan City, Chullabuk-Do 570-350, Republic of Korea	**ISO 14001:2015** Manufacture of Water and Process Treatment Chemicals.

ANAB ACCREDITED ISO/IEC 17021 MANAGEMENT SYSTEMS CERTIFICATION BODY

Lloyd's Register Group Limited, its affiliates and subsidiaries, including Lloyd's Register Quality Assurance Limited (LRQA), and their respective officers, employees or agents are, individually and collectively, referred to in this clause as 'Lloyd's Register'. Lloyd's Register assumes no responsibility and shall not be liable to any person for any loss, damage or expense caused by reliance on the information or advice in this document or howsoever provided, unless that person has signed a contract with the relevant Lloyd's Register entity for the provision of this information or advice and in that case any responsibility or liability is exclusively on the terms and conditions set out in that contract.
Issued by: Lloyd's Register Quality Assurance, Inc., 1330 Enclave Parkway, Suite 200, Houston, Texas 77077, United States for and on behalf of: Lloyd's Register Quality Assurance Limited, 1 Trinity Park, Bickenhill Lane, Birmingham B37 7ES, United Kingdom

Appendix C – Bonding Capacity Letter for SUEZ WTS Systems USA

EULER HERMES

June 27, 2022

Re: Suez WTS Systems USA, Inc.-Caesars Lane WWTP MBR System Pre-Selection

To Whom It May Concern:

This letter will serve to confirm that Suez WTS Systems USA Inc. is a highly regarded and valued client of Euler Hermes North America Insurance Company. We will favorably consider issuing surety bonds for Suez WTS Systems USA, Inc. for individual projects with contract values up to $75mm with an aggregate surety program up to $200mm, although greater limits would be considered.

As is customary within the surety industry, the execution of any bonds would be subject to, but not necessarily limited to, receipt and favorable review of all contract terms and conditions, bond forms, confirmation of project financing and all current underwriting information needed at the time of the request for bonds. Please understand that any arrangement for surety bonds is a matter strictly between (contractor) and Euler Hermes North America Insurance Company. As such, we assume no liability to you or any third party by the issuance of this letter. It is issued only as a bonding reference requested by our client.

Euler Hermes North America Insurance Company is listed in the US Department of Treasury's listing of Approved Sureties (Department Circular 570). Euler Hermes North America Insurance Company has a Company Policyholder rating of 'A+' (Superior) by A.M. Best Company, with a Financial Size Category of 'XV' ($2 Billion or greater).

Sincerely,

Mariya Leonidov, Attorney-In-Fact

EULER HERMES
Our knowledge serving your success

EULER HERMES NORTH AMERICA INSURANCE COMPANY

Statutory Statements of Admitted Assets, Liabilities, and Policyholders' Surplus

Statutory Basis at December 31, 2020

(In thousands, except share data)

Admitted Assets		2020
Bonds	$	350,802
Common stocks		9,128
Cash and cash equivalents		55,125
Other investments		30,500
Total cash and invested assets		445,555
Premiums receivable		119,974
Reinsurance recoverable on paid losses		8,577
Net deferred tax assets		14,172
Other admitted assets		26,396
Total admitted assets	$	614,674
Liabilities and Policyholders' Surplus		
Liabilities:		
Unpaid losses and loss adjustment expenses	$	214,647
Unearned premiums		155,439
Premium taxes, licenses, and fees		1,987
Ceded reinsurance premiums payable		15,406
Reinsurance payable on paid losses		1,732
Payable to parent, subsidiaries, and affiliates		10,896
Accounts payable and accrued expenses		56,855
Funds held under reinsurance agreements		1,274
Total liabilities		458,236
Policyholders' surplus:		
Common stock – par value $10 per share. Authorized, issued, and outstanding shares 250,000		2,500
Gross paid-in and contributed surplus		13,167
Unassigned surplus		140,771
Total policyholders' surplus		156,438
Total liabilities and policyholders' surplus	$	614,674

Euler Hermes North America Insurance Company
800 Red Brook Boulevard
Owings Mills MD 21117
Tel 410 753 0753
Fax 410 753 0940
Toll Free 877 883 3224

EULER HERMES
Our knowledge serving your success

Louise Jordan, being duly sworn, affirms that she is the Chief Financial and Administration Officer of Euler Hermes North America Insurance Company, and that to the best of her knowledge and belief, the foregoing statement is a true and correct statement of financial condition of said Company as of 31 December 2020.

Subscribed and sworn to before me this 15th day of JUNE ,2021

Elaine A. McClean – Notary Public

Louise Jordan - CFAO

ELAINE A. MCCLEAN
My Commission Expires
NOTARY
PUBLIC
05-19-2023
HARFORD COUNTY, MD

Euler Hermes North America Insurance Company
800 Red Brook Boulevard
Owings Mills, MD 21117
Tel 410 753 0753
Fax 410 753 0940
Toll Free 877 883 3224

Appendix D - Hydraulic Profile Markup

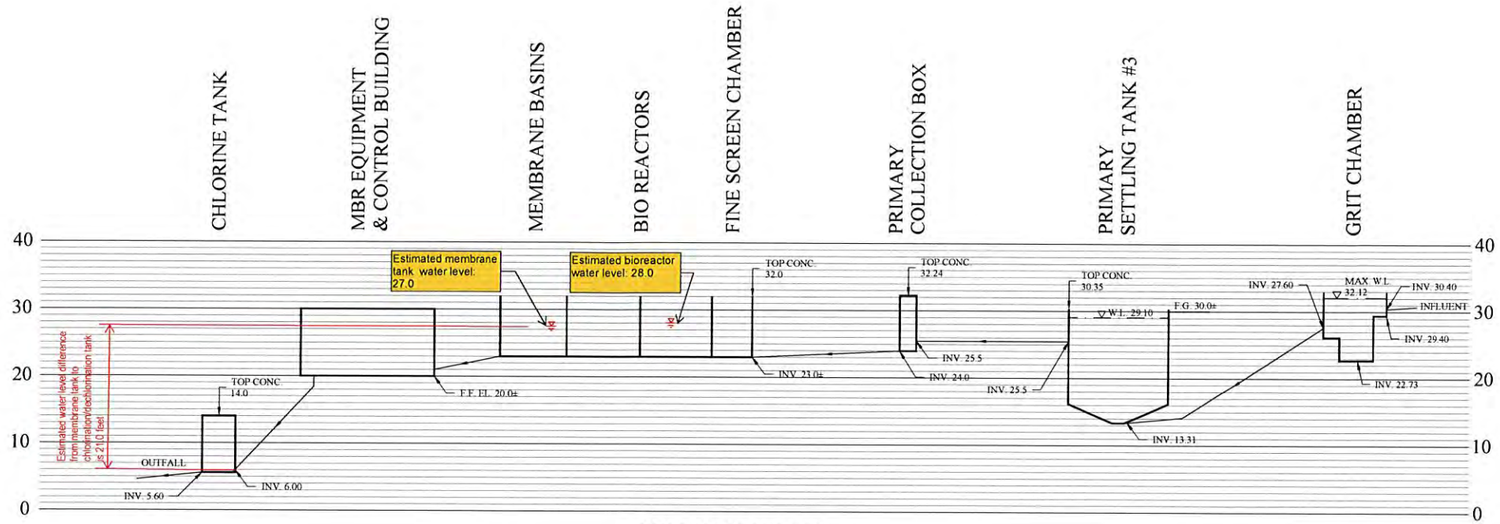

HYDRAULIC PROFILE

SCALES: HORIZ. NONE, VERT. 1"=10'

NOTE: PRIMARY COLLECTION BOX AND CHLORINATION TANK ARE EXISTING. ELEVATION BETWEEN THOSE STRUCTURES ARE AVAILABLE FOR MBR SYSTEM INSTALLATION

MHE ENGINEERING

33 Airport Center Drive, Suite 202
New Windsor, NY 12563
(845) 567-3100

111 Wheatfield Drive, Suite 1
Milford, PA 18337
(570) 296-2765

SCHEMATIC DESIGN

Dig Safely. New York
Call811
before you dig

UNAUTHORIZED ADDITION OR ALTERATION OF THIS PLAN IS A VIOLATION OF SECTION 7209(2) OF THE NEW YORK STATE EDUCATION LAW

ALL PRODUCTION & INTELLECTUAL PROPERTY RIGHT RESERVED ©

CAESARS LANE WWTP EXPANSION PHASE

FOR TOWN OF NEW WINDSOR
555 UNION AVE.
NEW WINDSOR, NY 12553

HYDRAULIC PROFILE

REVISIONS

NO	DESCRIPTION	DATE

ISSUED DATE:	13 MAY, 2022
DESIGN BY:	MJS
DRAWN BY:	HPB/Jr TJA
CHECKED BY:	MJS
REVIEWED BY:	MJS, JZ

SHEET NO

HP-101

PROJECT # 18-732 PHASE # 1-2

F:\2018\18-732 Caesar Lane WWTP Impv...\Drafting\HYDRAULIC PROFILE MBR.dwg, HP-101, 5/13/2022 8:59:58 AM

Appendix E - Supplementary Conditions of the Procurement Contract

These Supplementary Conditions amend or supplement EJCDC® P-700, Standard General Conditions of the Procurement Contract (2019). The General Conditions remain in full force and effect except as amended.

The terms used in these Supplementary Conditions have the meanings stated in the General Conditions. Additional terms used in these Supplementary Conditions have the meanings stated below, which are applicable to both the singular and plural thereof.

The address system used in these Supplementary Conditions is the same as the address system used in the General Conditions, with the prefix "SC" added—for example, "Paragraph SC-4.05."

ARTICLE 1—DEFINITIONS AND TERMINOLOGY

No suggested Supplementary Conditions in this Article.

ARTICLE 2—PRELIMINARY MATTERS

2.01 *Copies of Documents*

SC-2.02 Amend the first sentence of Paragraph 2.02.A. to read as follows:

Buyer shall furnish to Seller **two (2)** printed copies of the Procurement Contract Documents (including one fully signed counterpart of the Procurement Agreement), and **one (1) copy** in electronic portable document format (PDF).

ARTICLE 3—PROCUREMENT CONTRACT DOCUMENTS

No suggested Supplementary Conditions in this Article.

ARTICLE 4—COMMENCEMENT AND PROGRESS OF WORK

No suggested Supplementary Conditions in this Article.

ARTICLE 5—BONDS AND INSURANCE

5.01 *Performance, Payment, and Other Bonds*

SC-5.01 Add the following paragraphs immediately after Paragraph 5.01.A:

1. *Required Performance Bond Form*: The performance bond that Seller furnishes will be in the form of EJCDC® P-610, Performance Bond (2010 or 2019 edition).
2. *Required Payment Bond Form*: The payment bond that Contractor furnishes will be in the form of EJCDC® P-615, Payment Bond (2010 or 2019 edition).

5.02 *Insurance*

SC-5.02 Add the following new paragraphs immediately after Paragraph 5.02.E:

F. Seller shall purchase and maintain such liability and other insurance as is appropriate for the furnishing of Goods and Special Services and as will provide protection from claims set forth

Copyright© 2019 National Society of Professional Engineers, American Council of Engineering Companies, and American Society of Civil Engineers. All rights reserved.

below which may arise out of or result from Seller's furnishing of the Goods or Special Services and Seller's other obligations under the Procurement Contract Documents, whether the furnishing of Goods and Special Services or other obligations are to be performed by Seller, any subcontractor or supplier, or by anyone directly or indirectly employed by any of them to furnish the Goods and Special Services, or by anyone for whose acts any of them may be liable:

1. claims under workers' compensation, disability benefits, and other similar employee benefit acts;
2. claims for damages because of bodily injury, occupational sickness or disease, or death of Seller's employees;
3. claims for damages because of bodily injury, sickness or disease, or death of any person other than Seller's employees;
4. claims for damages insured by reasonably available personal injury liability coverage which are sustained: (a) by any person as a result of an offense directly or indirectly related to the employment of such person by Seller, or (b) by any other person for any other reason;
5. claims for damages, other than to the Goods, because of injury to or destruction of tangible property wherever located,; and
6. claims for damages because of bodily injury or death of any person or property damage arising out of the ownership, maintenance or use of any motor vehicle.

G. The policies of insurance so required by this Paragraph 5.02 to be purchased and maintained must:

1. with respect to insurance required by Paragraphs SC-5.02.F.3 through SC-5.02.F.6 inclusive, include as additional insureds (subject to any customary exclusion in respect of professional liability) Buyer, Engineer, their consultants, and all of whom must be listed as additional insureds, but only in respect of work performed by or on behalf of the named insured, Seller, and only to the extent that the additional insured is held liable for the negligence or other culpability of Seller. Coverage under Seller's policy does not extend to liability arising out of the additional insured's own negligence. Also include coverage for the respective officers, directors, partners, employees, agents, and other consultants and subcontractors of each and any of all such additional insureds, and the insurance afforded to these additional insureds must provide primary coverage for all claims covered thereby;
2. include the specific coverages and be written for the limits of liability provided below or required by Laws or Regulations, whichever is greater;
3. include completed operations insurance;
4. include contractual liability insurance covering Seller's indemnity obligations under Paragraph 7.07;
5. contain a provision or endorsement that the coverage afforded will not be canceled, or renewal refused, until at least 30 days prior written notice has been given to the purchasing policyholder. Within three days of receipt of any such written notice, the purchasing policyholder will provide a copy of the notice to the other party, each other insured, and Engineer;

Copyright® 2019 National Society of Professional Engineers, American Council of Engineering Companies, and American Society of Civil Engineers. All rights reserved.

6. remain in effect at least until final payment and at all times thereafter when Seller may be correcting, removing, or replacing non-conforming Goods in accordance with Paragraph 9.03 and 9.04; and7. with respect to completed operations insurance, and any insurance coverage written on a claims-made basis, remain in effect for at least two years after final payment (and Seller shall furnish Buyer and each other additional insured identified in these Supplementary Conditions, to whom a certificate of insurance has been issued, evidence satisfactory to Buyer and any such additional insured of continuation of such insurance at final payment and one year thereafter).

H. The limits of liability for the insurance required by Paragraph SC-5.02.F must provide coverage for the following amounts or greater where required by Laws and Regulations:

1. Workers' Compensation, and related coverages under Paragraphs SC-5.02.F.1 and F.2:

   a. The Seller shall procure and maintain, at their own expense, during the contract period, in accordance with the provisions of the laws of the state in which the work is performed, Workmen's Compensation Insurance, including occupational disease provisions, for all of his employees at the site of the project and in case any work is sublet, the Seller shall require such subcontractor similarly to provide Workmen's Compensation Insurance, including occupational disease provisions for all of the latter's employees unless such employees are covered by the protection afforded by the Seller. In case any class of employees engaged in hazardous work under this contract at the site of the project is not protected under Workmen's Compensation statute, the Seller shall provide, and shall cause each subcontractor to provide, adequate and suitable insurance for the protection of his employees not otherwise protected.

2. Seller's General Liability and Property Damage Insurance, including vehicle coverage issued to the Contractor and protecting him from all claims for personal injury, including death, and all claims for destruction of or damage to property, arising out of or in connection with any operations under the Contract Documents, whether such operations be by himself or by any subcontractor under him, or anyone directly or indirectly employed by the Contractor or by a subcontractor under him. The insurance shall be written with a limit of liability of $2,000,000 for all damages arising out of bodily injury, including death, at any time resulting there from, sustained by any one person in any one accident; and a limit of liability $2,000,000 aggregate for any such damages sustained by two or more persons in any one accident. Insurance shall be written with a limit of liability of $2,000,000 for all property damage sustained by any one person in any one accident; and a limit of liability of $2,000,000 aggregate for any such damage sustained by two or more persons in any one accident.

3. Professional Liability (if the Special Services include professional services):

Seller's Professional Liability	**Policy limits**
Each Claim	$2,000,000
Annual Aggregate	$2,000,000

Copyright© 2019 National Society of Professional Engineers, American Council of Engineering Companies, and American Society of Civil Engineers. All rights reserved.

I. Seller shall deliver to Buyer, with copies to each additional insured identified in these Supplementary Conditions, certificates of insurance which Seller is required to purchase and maintain.

ARTICLE 6—LICENSES AND FEES

6.01 Intellectual Property and License Fees

SC 6.01 Replace paragraph 6.01 in its entirety with the following:

A. Unless specifically stated elsewhere in the Contract Documents, Seller is not transferring any intellectual property rights, patent rights, or licenses for the Goods delivered. However, in the event the Seller is manufacturing to Buyer's design, Buyer retains all intellectual property rights in such design excluding Seller's proprietary intellectual property and any improvements to Seller's proprietary intellectual property which shall be and remain the sole and exclusive property of Seller.

B. Seller shall pay all license fees and royalties and assume all costs incident to the use or the furnishing of the Goods, unless specified otherwise by the Contract Documents. Seller grants to Buyer a non-exclusive, non-terminable, royalty free license to use the intellectual property embedded in Equipment delivered to and paid for by the Buyer, as well as any drawings, design or data delivered to and paid for by the Buyer, for the purposes of owning, financing, using, operating and maintaining the relevant Equipment at the Project site. Such license may only be assigned to a future owner of the Equipment or to an operations and maintenance subcontractor. Such license does not extend to the re-creation of the Equipment or the manufacture of spares or consumables by Buyer or third parties.

C. Any software Seller owns and provides pursuant to this Contract shall remain Seller's property. Seller provides to Buyer a limited, non-exclusive and terminable royalty free project-specific license to such software for the term of this Contract. Buyer agrees not to copy, sub-license, translate, transfer, reverse engineer, or decode the software. Unless otherwise expressly agreed by Seller, this license shall terminate and the software shall be returned to Seller upon termination of this Contract, or the material breach of the terms in this section.

D. Both parties agree to keep confidential the other party's proprietary non-public information, if any, which may be acquired in connection with this Contract. Buyer will not, without Seller's advance written consent, subject Equipment to testing, analysis, or any type of reverse engineering. Seller retains all intellectual property rights including copyright which it has in all drawings and data or other deliverables supplied or developed under this Contract. Buyer acknowledges that Seller is in the business of selling the Equipment subject to this Contract and agrees that it will not file patent applications on the Equipment, or processes and methods of using the Equipment, without Seller's express written permission. Buyer further agrees that in any event any such patents will not be asserted against Seller or its other Buyers based upon purchase and use of such Equipment.

Copyright® 2019 National Society of Professional Engineers, American Council of Engineering Companies, and American Society of Civil Engineers. All rights reserved.

ARTICLE 7—SELLER'S RESPONSIBILITIES

7.03 *Laws and Regulations*

7.04 *"Or Equals"*

7.05 *Taxes*

SC-7.05 Add a new paragraph immediately after Paragraph 7.05.A:

B. Buyer is exempt from payment of sales and compensating use taxes of the State of **New York** and of cities and counties thereof on all materials and equipment to be incorporated into the Project facilities.

1. Buyer will furnish the required certificates of tax exemption to Seller with respect to materials and equipment to be incorporated into the Project facilities.

2. Buyer's exemption does not apply to construction tools, machinery, equipment, or other property purchased by or leased by Seller, or to supplies or materials not incorporated into the Project facilities.

3. The Procurement Contract Price does not include the cost of sales or compensating use taxes to the extent such are exempted by this paragraph.

7.07 *Indemnification*

SC-7.07 Replace paragraph 7.07.A in its entirety with the following:

To the fullest extent permitted by Laws and Regulations, Seller shall indemnify and hold harmless Buyer, Engineer, Project Owner, and any assignee of Buyer, including Contractor/Assignee, and their officers, directors, members, partners, employees, agents, consultants, contractors, and subcontractors, from and against all claims, costs, losses, and damages (including but not limited to all fees and charges of engineers, architects, attorneys, and other professionals and all court or arbitration or other dispute resolution costs) to the extent arising out of or relating to the performance of Seller's obligations under the Procurement Contract, provided that any such claim, cost, loss, or damage is attributable to bodily injury, sickness, disease, or death, or to injury to or destruction of tangible third-party property (other than the Goods themselves), but only to the extent caused by any negligent act or omission of Seller, or any individual or entity directly or indirectly employed by Seller or anyone for whose acts Seller may be liable.

ARTICLE 8—SHIPPING AND DELIVERY

No suggested Supplementary Conditions in this Article.

ARTICLE 9—BUYER'S RIGHTS

9.01

SC 9.01 Add the following paragraph after 9.01.C.4:

A. Improper handling, storage, installation, or commissioning of the Equipment by Buyer or third parties, repairs or alterations made by Buyer without Seller's written consent, or influent water which does not comply with agreed parameters.

Copyright© 2019 National Society of Professional Engineers, American Council of Engineering Companies, and American Society of Civil Engineers. All rights reserved.

9.04 *Correction Period*

SC-9.04.B Replace paragraph 9.04.B in its entirety with the following:

Warranty repair, replacement or re-performance by Seller shall not extend or renew the applicable warranty period of the Work, except for repetitive malfunction of material or equipment under the Work that shall be cause for replacement by Seller of the affected equipment with a redesigned component and extension of the Warranty Period for that equipment of the Work for a period of twelve (12) months from completion of the required warranty work.

SC-9.04.C Replace paragraph 9.04.C in its entirety with the following:

The warranties and remedies set forth in this article are in lieu of and exclude all other warranties and remedies, statutory, express or implied, including any warranty of merchantability or of fitness for a particular purpose.

SC-9.05 Add the following new paragraph after Paragraph 9.04:

9.05 *Limitation of Seller's Liability*

A. Notwithstanding anything else contained in this Agreement, to the maximum extent permitted by law, and regardless of whether a claim is based in contract (including warranty or indemnity), extra-contractual liability, tort (including negligence or strict liability), statute, equity or any other legal theory; Buyer and Seller agree that the total liability of Seller to Buyer for claims, costs, losses, and damages arising from this Procurement Contract will be limited to the amount established in the Procurement Agreement as the Procurement Contract Price.

B. Upon assignment the terms of this Paragraph 9.05 will be binding upon both the assignor and assignee with respect to Seller's liability, The terms of this limitation do not apply to or limit any claim by Buyer against Seller based on any of the following: (a) contribution or indemnification with respect to third-party claims, losses, and damages; (b) costs, losses, or damages attributable to personal or bodily injury, sickness, disease, or death, or to injury to or destruction of the tangible property of others, (c) intentional or reckless wrongful conduct, or (d) rights conferred by any bond provided by Seller under this Contract.

C. In no event shall either party be liable for any loss of profit or revenues, loss of production, loss of use of equipment or services or any associated equipment, interruption of business, cost of capital, cost of replacement water or power, downtime costs, increased operating costs, claims of company's customers for such damages, or for any special, consequential, incidental, indirect, punitive or exemplary damages.

Copyright© 2019 National Society of Professional Engineers, American Council of Engineering Companies, and American Society of Civil Engineers. All rights reserved.

9.06 Buyer's Responsibilities

SC 9.06 Add the following new paragraph after Paragraph 9.05:

A. Unless otherwise stipulated in the Contract, the unloading, handling, storage and installation of the Equipment shall be the responsibility of the Buyer. Seller will not control the actual operation of either Buyer's systems or the Equipment at the Site. Buyer shall also:

1. provide Seller with complete and accurate data concerning all relevant conditions at the Site, including but not limited to any existing Buyer facility, equipment or processes, influent water or other substances to be treated or measured with the Equipment;

2. operate and maintain its facility and all related systems in good operating condition and within the agreed parameters or, if no parameters have been agreed, within generally accepted industry practice;

3. operate and maintain the Equipment in accordance with Seller's operations and maintenance manuals or where such manuals are silent, in accordance with generally accepted industry practice.

If Buyer's fails to fulfill the foregoing obligations, Seller shall be relieved of any obligations with respect to warranties or any other commitments under the Contract, and Seller shall have no liability for any loss, damage or injury which Buyer may sustain as a result.

ARTICLE 10—ENGINEER'S STATUS

No suggested Supplementary Conditions in this Article.

ARTICLE 11—CHANGES

No suggested Supplementary Conditions in this Article.

ARTICLE 12—CLAIMS, DISPUTES, AND DISPUTE RESOLUTION

No suggested Supplementary Conditions for this Article.

ARTICLE 13—PAYMENT

No suggested Supplementary Conditions in this Article.

ARTICLE 14—CANCELLATION, SUSPENSION, AND TERMINATION

No suggested Supplementary Conditions in this Article.

ARTICLE 15—MISCELLANEOUS

Copyright© 2019 National Society of Professional Engineers, American Council of Engineering Companies, and American Society of Civil Engineers. All rights reserved.

EXHIBIT J

Additional Scope Change Order Proposal –
Veolia Water Technologies & Solutions
(F.K.A. Suez WTS USA, Inc.)

Jamison Zajac
Senior Engineer
MHE Engineering
33 Airport Center Drive Suite 202
New Windsor NY 12553

Darren Preete
Project Manager
Veolia Water Technologies & Solutions
3239 Dundas St W
Oakville ON L6M 4B2

April 7 2025

Subject: Caesar Lane WWTF
Change Order Proposal

Dear Mr. Zajac,

Below please find the pricing for the various changes to Veolia's Scope that have been requested.

ITEM	QTY	Change	Price
1	lot	Removal of the Process Blower VFDs (x3) and Membrane Blower VFDs (x2) from Veolia's Scope	**($75,970.00)**
2	lot	Modifications to the Aeration equipment to accommodate second Aerobic zone. Includes: • Modification to diffusor grids • Additional Dissolved Oxygen sensor and controller (x3) • Blower motor size increase due to deeper tanks	**$35,175.00**
3	lot	Chemical System Scope changes: • Removal of Chemical storage tanks from Veolia's Scope (x2) • Removal of chemical tank LITs from Veolia's Scope (x3) • Addition of chemical tank level switch to Veolia's Scope (x1)	**($4,300.00)**
4	Lot	Remove 20-FV-601 from Veolia's Scope. (This valve was removed in Veolia's previous submittal) (x1) Add 16-HV-400-A/B/C to Veolia's Scope (Blower intake isolation valves, including limit switches) (x3)	**($403.00)**
5	lot	Add 20-FV-502-X to Veolia's Scope (x4)	**$61,890.00**
6	lot	Add 16-FV-510 to Veolia's Scope (x1)	**$42,480.00**
7	8	Remove Space Heaters from Membrane and Process Blower enclosures	**($6,160.00)**
8	lot	Add to Veolia's scope: • 20-HV-204-A/B/C/D/E/F-X (x24) • 20-HV-310-A/B/C/D/E/F-X (x24) • 20-FV-205-X (x4)	**$9,472.00**

Jamison Zajac
Senior Engineer
MHE Engineering
33 Airport Center Drive Suite 202
New Windsor NY 12553

Darren Preete
Project Manager
Veolia Water Technologies & Solutions
3239 Dundas St W
Oakville ON L6M 4B2

9	lot	Add open & close limit switches to: • 20-FV-502-X (x4) • 20-FV-621-X (x4) • 20-FV-622-X (x4) • 16-FV-700 (x1) • 16-FV-510 (x1) Change Includes all required to be added to Veolia's MCP for additional IO points, and associated controls/programming updates	**$12,820.00**
10	2	Add NEMA 12 panels for air compressor control to Veolia's Scope	**$8,454.00**
12	Lot	Add to Veolia's Scope: 1. 316SS 16" Permeate Headers (x4). 480" Length 2. 316SS 10" Air Headers (x4). 480" Length 3. 316SS 8" Permeate Downcomers (x24) for connection of membrane cassette to Permeate header (including associated Victaulic couplings for assembly) 4. CPVC 3" Air Downcomers (x24) for connection of membrane cassette to Air header (including associated Victaulic couplings for assembly) • Pipe supports, hardware, and gaskets are not included	1. $18,202.70ea 2. $10,048.13ea 3. $2,015.74ea 4. $779.42ea Total **$180,087.00**

TOTAL $263,545.00

All prices exclude any applicable taxes, duties, or tariffs
All prices quoted subject to escalation, until NTP is received

Jamison Zajac
Senior Engineer
MHE Engineering
33 Airport Center Drive Suite 202
New Windsor NY 12553

Darren Preete
Project Manager
Veolia Water Technologies & Solutions
3239 Dundas St W
Oakville ON L6M 4B2

Schedule Impact:
There is no equipment delivery or schedule delay resulting from this change order

Except as changed herein, all terms and conditions of the contract remain in full force and effect.

This proposal is intended to be binding only upon confirmation of a document signed by all parties.

Accepted by:

_____ _____

Title: Project Manager Title: _____

Veolia WTS

Date _____ Date _____

Notice:

1. This document shall become a supplement to the current agreement/proposal and the terms and conditions outlined in the proposal shall apply to this change order.
2. Impact to delivery dates are estimated and will be finalized upon acceptance of this change order.
3. No action can be taken without an authorized signature.
4. By accepting the change order the Customer authorizes Veolia WTS to proceed with said change order.

EXHIBIT K

Veolia Water Technologies & Solutions
(F.K.A. Suez WTS USA, Inc.)
Contract Escalation Package

Jamison Zajac
Senior Engineer
MHE Engineering
33 Airport Center Drive Suite 202
New Windsor NY 12553

Darren Preete
Project Manager
Veolia Water Technologies & Solutions
3239 Dundas St W
Oakville ON L6M 4B2

March 28 2025

Subject: Caesar Lane WWTF
Price Escalation

Dear Mr. Zajac,

As stayed in Veolia's proposal, Veolia's selling price is subject to escalation until the date that NTP is provide to Veolia by the General Contractor. The basis on this escalation is defined in the letter included in Appendix C dated Nov 7 2022.

With this letter, Veolia is providing a calculation of the price escalation of Veolia supplied material between the date of Veolia's price proposal (July 2022) and today date (March 2025). Please note that the calculations provided with the letter will be revised at the future date that NTP is provided.

Veolia's material price escalation is summarized below:

Category	**Escalation Amount (As of March 2025)**
Veolia Membranes	$ 13,454.07
Quoted third party equipment	$ 160,784.25
Veolia cost databases / negotiated pricing agreements	$ 38,938.78
Total ($USD)	**$ 213,177.10**

Let us know if you have any questions or concerns regarding this information

Regards

Darren Preete
Project Manager
Veolia WTS

Jamison Zajac
Senior Engineer
MHE Engineering
33 Airport Center Drive Suite 202
New Windsor NY 12553

Darren Preete
Project Manager
Veolia Water Technologies & Solutions
3239 Dundas St W
Oakville ON L6M 4B2

Veolia Membranes and Cassettes (Supporting data included in Appendix A)

			PPI					
Bid Amount $USD	$	1,345,407.36	Jul_2022	Feb_2025	Escalation Factor	ESC Factor+1%	Adjusted $USD	Escalation Amount $USD
40% WPU10	$	538,162.94	328.864	312.879	0.95139328	1.01	$ 543,544.57	$ 5,381.63
60% WPU072	$	807,244.42	280.858	272.611	0.97063641	1.01	$ 815,316.86	$ 8,072.44
Total	**$**	**1,345,407.36**					**$ 1,358,861.43**	**$ 13,454.07**

Quoted third party Equipment (Supporting data included in Appendix B)

		Jun-22					Mar-25				
Item	Quantity	Unit Cost	Sub-total Cost	CAD/USD	CAD TO USD	Sub-Total Cost (USD)	Unit Cost	Sub-total Cost	CAD/USD	CAD TO USD	Sub-Total Cost (USD)
Membrane blower	5	$ 23,620	$ 118,100	CAD	0.778883	$ 91,986.08	$ 33,300	$ 166,500	CAD	0.6947	$ 115,667.55
Process blower	3	$ 45,900	$ 137,700	CAD	0.778883	$ 107,252.19	$ 46,380	$ 139,140	CAD	0.6947	$ 96,660.56
Sulzer submersible mixers; RAS pumps, BP pumps, and associated spare parts	1	$ 265,148	$ 265,148	USD	1	$ 265,148.38	$ 347,908	$ 347,908	USD	1	$ 347,908.22
SSI diffuser	1	$ 88,000	$ 88,000	USD	1	$ 88,000.00	$ 105,800	$ 105,800	USD	1	$ 105,800.00
V-Port valve (CS body)	4	$ 19,455	$ 77,820	CAD	0.778883	$ 60,612.68	$ 34,286	$ 137,142	CAD	0.6947	$ 95,272.55
Prominent sampling pump	4	$ 1,181	$ 4,724	CAD	0.778883	$ 3,679.44	$ 1,181	$ 4,724	CAD	0.6947	$ 3,281.76
ACME bucket strainer	1	$ 12,926	$ 12,926	CAD	0.778883	$ 10,067.84	$ 16,388	$ 16,388	CAD	0.6947	$ 11,384.74
Prominent hypo dosing skid	1	$ 16,620	$ 16,620	CAD	0.778883	$ 12,945.04	$ 23,459	$ 23,459	CAD	0.6947	$ 16,296.68
Prominent citric acid dosing skid	1	$ 16,620	$ 16,620	CAD	0.778883	$ 12,945.04	$ 23,459	$ 23,459	CAD	0.6947	$ 16,296.68
IBC tank- (De-Scoped)											
Atlas Copco compressor system	1	$ 10,855	$ 10,855	CAD	0.778883	$ 8,454.77	$ 19,155	$ 19,155	CAD	0.6947	$ 13,306.98
Total quoted cost						**$661,091.46**					**$821,875.71**

Escalation	
$ 160,784.25	**USD**

Veolia cost databases / negotiated pricing agreements

Category	Jun-22	Mar-25
Manual Valve	$ 39,461.69	$ 53,596.64
Automatic Valve	$ 15,375.89	$ 19,319.22
Membrane Tank Cassette & Instrumenta	$ 92,012.58	$ 92,012.58
Tanks	$ 2,454.00	$ 4,500.00
I&C	$ 211,253.00	$ 220,862.19
Misc Ancillary	$ 21,240.82	$ 25,024.01
Spares	$ 16,283.65	$ 21,705.78
Total Pricelist Cost	**$398,081.63**	**$ 437,020.42**

Escalation	
$ 38,938.78	**US**

Jamison Zajac
Senior Engineer
MHE Engineering
33 Airport Center Drive Suite 202
New Windsor NY 12553

Darren Preete
Project Manager
Veolia Water Technologies & Solutions
3239 Dundas St W
Oakville ON L6M 4B2

Quoted third party Equipment – Scope Details

For clarity, the items included in the "Unit Costs" as the basis of costing are detailed below:

Membrane Blower

- 1x Pressure Package - GM 50L DN 200
- 1x Inlet flexible sleeve
- 1x Motor Protection - 1 Thermistor/Ph
- 1x Hood Space Heater

Process Blower

- 1x Pressure Package - GM 90S DN 250
- 1x Inlet flexible sleeve
- 1x Motor Protection - 1 Thermistor/Ph
- 1x Temperature Switches
- 1x Pressure Switches
- 1x Hood Space Heater

Sulzer submersible mixers; RAS pumps, BP pumps, and associated spare parts

- 3x Sulzer Submersible Mixer
- 1x Spare Parts: Repair Kit /w Bearings and Mechanical Seals
- 1x Portable 24"-36" Adjustable Reach 60"H,1000LB Capacity /w Manual Handwinch
- 3x Socket,Platform,316SS
- 4x RAS Pump - Sulzer End Suction Centrifugal Pump Model #APT52-16
- 1x Spare Parts: Mechanical Seal,Cartridge SiC/SiC
- 2x Backpulse Pump - Sulzer Submersible Pump (Wet Pit),Model #XFP255J-CB2-PE430/6
- 1x Spare Parts: Repair Kit /w Bearings and Mechanical Seals

Atlas Copco Compressor system

- 2x CR7.5-TS-80Gal Vertical 460/3/60-IS,TN4
- 2x FX15 refrigerant air dryer
- 2x UD+ filters
- 1x Standard Documentation

Appendix A

PPI Data

Veolia Water Technologies & Solutions
Head office: 3600 Horizon Blvd. Trevose, PA 19053
off. +1-215-533-0000 - fax +215-633-0000
www.veolia.com

<Local office address> <City>, <State> <Country>
off. <Local telephone #> - fax <Local fax #>

PPI Commodity Data

Series Title	PPI Commodity data for Metals and metal products, not seasonally adjusted
Series ID	WPU10
Seasonality	Not Seasonally Adjusted
Survey Name	PPI Commodity Data
Measure Data Type	Metals and metal products
Sector	Metals and metal products
Item	Metals and metal products

Year	Period	Label	Observation Value
2022	M01	2022 Jan	334.372
2022	M02	2022 Feb	330.014
2022	M03	2022 Mar	336.023
2022	M04	2022 Apr	341.670
2022	M05	2022 May	345.243
2022	M06	2022 Jun	339.968
2022	M07	2022 Jul	328.864
2022	M08	2022 Aug	324.291
2022	M09	2022 Sep	316.229
2022	M10	2022 Oct	308.808
2022	M11	2022 Nov	308.255
2022	M12	2022 Dec	307.063
2023	M01	2023 Jan	309.964
2023	M02	2023 Feb	311.822
2023	M03	2023 Mar	314.568
2023	M04	2023 Apr	316.947
2023	M05	2023 May	318.434
2023	M06	2023 Jun	315.603
2023	M07	2023 Jul	310.956
2023	M08	2023 Aug	309.086
2023	M09	2023 Sep	306.748
2023	M10	2023 Oct	304.403
2023	M11	2023 Nov	304.046
2023	M12	2023 Dec	308.284
2024	M01	2024 Jan	312.260
2024	M02	2024 Feb	314.377
2024	M03	2024 Mar	307.579
2024	M04	2024 Apr	307.893
2024	M05	2024 May	311.850
2024	M06	2024 Jun	310.675
2024	M07	2024 Jul	308.590
2024	M08	2024 Aug	305.478
2024	M09	2024 Sep	304.976
2024	M10	2024 Oct	307.841
2024	M11	2024 Nov	308.485
2024	M12	2024 Dec	305.836
2025	M01	2025 Jan	307.399
2025	M02	2025 Feb	312.879

PPI Commodity Data

Series Title	PPI Commodity data for Rubber and plastic products-Plastic products, not seasonally adjusted
Series ID	WPU072
Seasonality	Not Seasonally Adjusted
Survey Name	PPI Commodity Data
Measure Data Type	Plastic products
Sector	Rubber and plastic products
Item	Plastic products

Year	Period	Label	Observation Value
2022	M01	2022 Jan	262.351
2022	M02	2022 Feb	264.808
2022	M03	2022 Mar	267.558
2022	M04	2022 Apr	270.900
2022	M05	2022 May	274.444
2022	M06	2022 Jun	278.428
2022	M07	2022 Jul	280.858
2022	M08	2022 Aug	283.312
2022	M09	2022 Sep	282.618
2022	M10	2022 Oct	280.371
2022	M11	2022 Nov	279.731
2022	M12	2022 Dec	279.269
2023	M01	2023 Jan	277.562
2023	M02	2023 Feb	276.095
2023	M03	2023 Mar	275.304
2023	M04	2023 Apr	275.605
2023	M05	2023 May	275.061
2023	M06	2023 Jun	273.420
2023	M07	2023 Jul	272.200
2023	M08	2023 Aug	271.683
2023	M09	2023 Sep	270.930
2023	M10	2023 Oct	270.818
2023	M11	2023 Nov	271.254
2023	M12	2023 Dec	270.852
2024	M01	2024 Jan	271.373
2024	M02	2024 Feb	271.126
2024	M03	2024 Mar	271.996
2024	M04	2024 Apr	273.420
2024	M05	2024 May	272.657
2024	M06	2024 Jun	272.650
2024	M07	2024 Jul	272.789
2024	M08	2024 Aug	273.721
2024	M09	2024 Sep	273.677
2024	M10	2024 Oct	273.570
2024	M11	2024 Nov	273.526
2024	M12	2024 Dec	273.252
2025	M01	2025 Jan	274.371
2025	M02	2025 Feb	272.611

Appendix B

Vendor Quotes

1. Aerzen Membrane and Process Blower
2. Sulzer submersible mixer, RAS pump, and BP pump,
3. SSI fine bubble diffuser
4. DeZurik V-Port control valve – CS body
5. ACME bucket strainer
6. Prominent chemical dosing skid - sodium hypochlorite and citric acid
7. Atlas Copco compressor

Veolia Water Technologies & Solutions

Confidential and Proprietary Information

The enclosed materials are considered proprietary property of Veolia Water Technologies & Solutions (Veolia).No assignments either implied or expressed, of intellectual property rights, data, know-how, trade secrets or licenses of use thereof are given. All information is provided exclusively to the addressee and agents of the addressee for the purposes of evaluation and is not to be reproduced or divulged to other parties, nor used for manufacture or other means, without the express written consent of Veolia. The acceptance of this document will be construed as an acceptance of the foregoing.

Aerzen Canada
980 rue Valois, Vaudreuil-Dorion, Québec J7V 8P2

Customer Reference: 510464 - Caesar Lanes
Aerzen Reference: 259014f

Submitted by: Farzin Mahmoudi
Farzin.Mahmoudi@aerzen.com

SCOPE OF SUPPLY

Membrane blowers with VFDs

2 Aerzen Generation 5 Blower Package - GM 50L DN 200 - Pressure - including:

Aerzen GM 50L Blower
Drive Motor: 60hp, 1800rpm, TEFC, 460V/60Hz
Motor Protection - 1 Thermistor/Ph
Base with integrated reactive type discharge silencer
Intake filter silencer
Hinged motor support as automatic belt tensioning device
Set of vibration isolation mounts
Narrow v-belt drive with guard - 1 set
Spring loaded relief valve
Discharge manifold with externally accessible integrated check valve
Flexible connector with clamps for schedule 40 pipe, discharge
Acoustic Enclosure - Indoor/Outdoor
Inlet flexible sleeve - DN 200 (8")

Instruments

Pressure gauge c/w isolation ball valve (2x)
Dirty filter indicator (2x)

Optional Spare Parts

1 Year Maintenance Kit (1 x V-Belt Set, 1 x Intake Filter)
2 Year Maintenance Kit (1 x V-Belt Set, 1 x Oil Change (Delta Lube), 2 x Air Filter)

Intake Connection: DN 200 - 8"
Discharge Connection: DN 200 - 8"

Aerzen Canada
980 rue Valois, Vaudreuil-Dorion, Québec J7V 8P2

Customer Reference: 510464 - Caesar Lanes
Aerzen Reference: 259014f

PERFORMANCE DATA

Aerzen Blower Package - GM 50L DN 200 - Pressure

Configuration:	**G5**	**"Buildout" LEAP HI**	**"Buildout" LEAP LO**	**Installed LEAP HI**	**Installed LEAP LO**	**Max Blower capacity with 60 hp motor**	**Min blower Turn down**
Conditions:	**Scfm**	**1540**	**769**	**1414**	**707**	**1615**	**276**
Flow at inlet conditions	m³/min	45.62	22.8	41.91	20.95	47.9	50.55
	Icfm	**1611**	**805**	**1480**	**740**	**1690**	**288**
Inlet pressure (abs.)	bar	1.012	1.012	1.012	1.012	1.012	1.012
	Psi	14.68	14.68	14.68	14.68	14.68	14.68
Pressure differential	mbar(g)	379	379	379	379	379	379
	Psig	**5.5**	**5.5**	**5.5**	**5.5**	**5.5**	**5.5**
Inlet temperature	°C	29.44	29.44	29.44	29.44	29.44	29.44
Discharge temperature	°C	65	68	65	68	65	79
Blower speed	RPM	3119	1692	2887	1578	3265	780
Blower maximum speed	RPM	3800	3800	3800	3800	3800	3800
% of maximum blower speed		82%	45%	76%	42%	86%	21%
Power required at shaft	kW	37.5	18.3	34.0	17.0	39.7	8.4
	HP	50.2	24.5	45.6	22.8	53.2	11.3
Total Power (Wire to Air):	HP	55.6	27.2	50.5	25.2	59.0	12.5
Motor rating	**HP**	**60.0**					
Motor speed	RPM	1775	963	1643	898	1858	444
Motor frequency	Hz	60	33	56	31		15

Noise level without acoustic hood	dB(A)	97
Noise level with acoustic hood	dB(A)	70

Tolerances as per EN 10204, in accordance with standard ISO 1217:
Flow at inlet conditions / Power require +/- 5%

Blower package noise level:
Free field measurement at 1m from the complete blower package (tolerance +/- 2 dB(A))

Tests and measurements:
Blower stage: 1.5 hour flow test at the factory (Germany) on a calibrated test bed, at maximum operating conditions and according to DIN 1945. acceptance tolerance: +/- 5%.
A complete test report is available upon request.

On Site Commissioning
Available upon request, charges to be advised.
- Any commissioning activity is subject to two weeks prior notice and completion of commissioning checklist.
- Any on-site activity outside the time indicated will be billed according to the Aerzen Standard Rate Sheet

Exclusions
Control Panels, Motor Starters, Piping and Electrical Connections
* Unloading valves are required for reduced voltage starters

Warranty
Blowers including accessories are warranted for a period of 30mo / max 36mo after delivery and after provisional acceptance of the work against defects in workmanship and design. This warranty does not cover wearing parts unless such parts are defective during shipping / commissioning.
As per Aerzen standard warranty terms.

** Power at shaft excludes drive motor and belt drive

Aerzen Canada
980 rue Valois, Vaudreuil-Dorion, Québec J7V 8P2

Customer Reference: 510464 - Caesar Lanes
Aerzen Reference: 259014f

PRICING

		Unit Cost		Extended Cost	
Pressure Package - GM 50L DN 200	$	31,160.00	$	62,320.00	2 Units
Optional Spare Parts					
1 Year Maintenance Kit	$	560.00	$	1,120.00	2 Units
2 Year Maintenance Kit	$	970.00	$	1,940.00	2 Units

TERMS AND CONDITIONS

INCOTERMS:	EXW - Aerzen Canada
Delivery:	Collect
Start-up Assistance / Operator Training	As noted - page 2
Funds:	CAD
Payment terms:	120 days net Subject to credit approval and final destination of goods
Suggested Payment method	**10% upon order entry** **15% upon submission of documentation** **10% upon completion of major equipment purchase** **25% upon proof of material readiness** **40% upon readiness for shipment**
Taxes:	G.S.T. extra, P.S.T. charged in Quebec only
Prices firm until:	4/20/2025
Packing:	Heavy duty wooden skid with polyethylene wrapping included * Crown Frame * Special packing can be quoted upon request.
Warranty:	30mo / max 36mo after delivery
Estimated Delivery:	26 Weeks for the entire project Estimated delivery after technical approval

- to avoid warranty conflicts, we recommend that our start-up services be ordered and the inspection and operation procedures in our manual be respected.
- The goods remain the property of Aerzen Canada until full payment. Extended payment delays may void the warranty.
- Past due invoice amounts carry an interest charge calculated at 24% apr.
- Aerzen Canada reserves the right to change product specifications without prior notice.
- Aerzen can hold ready units free of charge for up to 3 weeks past agreed due date, after which storage fees will apply.

Aerzen Canada
980 rue Valois, Vaudreuil-Dorion, Québec J7V 8P2

Customer Reference: 510464 - Caesar Lanes
Aerzen Reference: 259014f

Submitted by: Farzin Mahmoudi
Farzin.Mahmoudi@aerzen.com

SCOPE OF SUPPLY

Membrane blowers without VFDs

3 Aerzen Generation 5 Blower Package - GM 50L DN 200 - Pressure - including:

Aerzen GM 50L Blower
Drive Motor: 60hp, 1800rpm, TEFC, 460V/60Hz
Motor Protection - 1 Thermistor/Ph
Base with integrated reactive type discharge silencer
Intake filter silencer
Hinged motor support as automatic belt tensioning device
Set of vibration isolation mounts
Narrow v-belt drive with guard - 1 set
Spring loaded relief valve
Discharge manifold with externally accessible integrated check valve
Flexible connector with clamps for schedule 40 pipe, discharge
Acoustic Enclosure - Indoor/Outdoor
Inlet flexible sleeve - DN 200 (8")

Instruments

Pressure gauge c/w isolation ball valve (3x)
Dirty filter indicator (3x)

Optional Accessories

Unloading Valve - G5

Optional Spare Parts

1 Year Maintenance Kit (1 x V-Belt Set, 1 x Intake Filter)
2 Year Maintenance Kit (1 x V-Belt Set, 1 x Oil Change (Delta Lube), 2 x Air Filter)

Intake Connection: DN 200 - 8"
Discharge Connection: DN 200 - 8"

Aerzen Canada
980 rue Valois, Vaudreuil-Dorion, Québec J7V 8P2

Customer Reference: 510464 - Caesar Lanes
Aerzen Reference: 259014f

PERFORMANCE DATA

Aerzen Blower Package - GM 50L DN 200 - Pressure

Configuration:	**G5**	**"Buildout" LEAP HI**	**Installed LEAP HI**	**Max Blower capacity with 60 hp motor**	**Min blower Turn down**
Conditions:	**Scfm**	**1540**	**1414**	**1615**	**276**
Flow at inlet conditions	m³/min	45.62	41.91	47.9	50.55
	Icfm	**1611**	**1480**	**1690**	**288**
Inlet pressure (abs.)	bar	1.012	1.012	1.012	1.012
	Psi	14.68	14.68	14.68	14.68
Pressure differential	mbar(g)	379	379	379	379
	Psig	**5.5**	**5.5**	**5.5**	**5.5**
Inlet temperature	°C	29.44	29.44	29.44	29.44
Discharge temperature	°C	65	65	65	79
Blower speed	RPM	3119	2887	3265	780
Blower maximum speed	RPM	3800	3800	3800	3800
% of maximum blower speed		82%	76%	86%	21%
Power required at shaft	kW	37.5	34.0	39.7	8.4
	HP	50.2	45.6	53.2	11.3
Total Power (Wire to Air):	HP	55.6	50.5	59.0	12.5
Motor rating	**HP**	**60.0**			
Motor speed	RPM	1775	1643	1858	444
Motor frequency	Hz	60	56		15

Noise level without acoustic hood	dB(A)	97
Noise level with acoustic hood	dB(A)	70

Tolerances as per EN 10204, in accordance with standard ISO 1217:
Flow at inlet conditions / Power required at +/- 5%

Blower package noise level:
Free field measurement at 1m from the complete blower package (tolerance +/- 2 dB(A))

Tests and measurements:
Blower stage: 1.5 hour flow test at the factory (Germany) on a calibrated test bed, at maximum operating conditions and according to DIN 1945. acceptance tolerance: +/- 5%.
A complete test report is available upon request.

On Site Commissioning
Available upon request, charges to be advised.
- Any commissioning activity is subject to two weeks prior notice and completion of commissioning checklist.
- Any on-site activity outside the time indicated will be billed according to the Aerzen Standard Rate Sheet

Exclusions
Control Panels, Motor Starters, Piping and Electrical Connections
* Unloading valves are required for reduced voltage starters

Warranty
Blowers including accessories are warranted for a period of 30mo / max 36mo after delivery and after provisional acceptance of the work against defects in workmanship and design. This warranty does not cover wearing parts unless such parts are defective during shipping / commissioning.
As per Aerzen standard warranty terms.

** Power at shaft excludes drive motor and belt drive

Aerzen Canada
980 rue Valois, Vaudreuil-Dorion, Québec J7V 8P2

Customer Reference: 510464 - Caesar Lanes
Aerzen Reference: 259014f

PRICING

	Unit Cost	Extended Cost	
Pressure Package - GM 50L DN 200	$ 30,970.00	$ 92,910.00	3 Units
OPTIONS			
Unloading Valve - G5	$ 3,240.00	$ 9,720.00	3 Units
Optional Spare Parts			
1 Year Maintenance Kit	$ 560.00	$ 1,680.00	3 Units
2 Year Maintenance Kit	$ 970.00	$ 2,910.00	3 Units

TERMS AND CONDITIONS

INCOTERMS:	EXW - Aerzen Canada
Delivery:	Collect
Start-up Assistance / Operator Training:	As noted - page 2
Funds:	CAD
Payment terms:	120 days net Subject to credit approval and final destination of goods
Suggested Payment method	**10% upon order entry** **15% upon submission of documentation** **10% upon completion of major equipment purchase** **25% upon proof of material readiness** **40% upon readiness for shipment**
Taxes:	G.S.T. extra, P.S.T. charged in Quebec only
Prices firm until:	4/20/2025
Packing:	Heavy duty wooden skid with polyethylene wrapping included * Crown Frame * Special packing can be quoted upon request.
Warranty:	30mo / max 36mo after delivery
Estimated Delivery:	26 Weeks for the entire project Estimated delivery after technical approval

- to avoid warranty conflicts, we recommend that our start-up services be ordered and the inspection and operation procedures in our manual be respected.
- The goods remain the property of Aerzen Canada until full payment. Extended payment delays may void the warranty.
- Past due invoice amounts carry an interest charge calculated at 24% apr.
- Aerzen Canada reserves the right to change product specifications without prior notice.
- Aerzen can hold ready units free of charge for up to 3 weeks past agreed due date, after which storage fees will apply.

Aerzen Canada
980 rue Valois, Vaudreuil-Dorion, Québec J7V 8P2

Customer Reference: 510464 - Caesar Lanes
Aerzen Reference: 259014f

Submitted by: Farzin Mahmoudi
Farzin.Mahmoudi@aerzen.com

SCOPE OF SUPPLY

Process blowers - NEW OPTION : 2038 SCFM @ 9.74 PSIG

3 Aerzen Generation 5 Blower Package - GM 90S DN 250 - Pressure - including:

Aerzen GM 90S Blower
Drive Motor: 150hp, 1800rpm, TEFC, 460V/60Hz
Motor Protection - 1 Thermistor/Ph
Base with integrated reactive type discharge silencer
Intake filter silencer
Hinged motor support as automatic belt tensioning device
Set of vibration isolation mounts
Narrow v-belt drive with guard - 1 set
Spring loaded relief valve
Discharge manifold with externally accessible integrated check valve
Flexible connector with clamps for schedule 40 pipe, discharge
Acoustic Enclosure - Indoor/Outdoor
Inlet flexible sleeve - DN 250 (10")

Instruments
Pressure gauge c/w isolation ball valve (3x)
Dirty filter indicator (3x)

Optional Accessories
Temperature switch c/w thermowell 120V (3x)
Pressure switch 120V

Optional Spare Parts
1 Year Maintenance Kit (1 x V-Belt Set, 1 x Intake Filter)
2 Year Maintenance Kit (1 x V-Belt Set, 1 x Oil Change (Delta Lube), 2 x Air Filter)

Intake Connection: DN 250 - 10"
Discharge Connection: DN 250 - 10"

Aerzen Canada
980 rue Valois, Vaudreuil-Dorion, Québec J7V 8P2

Customer Reference: 510464 - Caesar Lanes
Aerzen Reference: 259014f

PERFORMANCE DATA

Aerzen Blower Package - GM 90S DN 250 - Pressure

Configuration:	**G5**	**Max flow duty point**	**Min Flow**	**Max blower capacity with 150 hp**
Conditions:	**Scfm**	2038	327	2403
Flow at inlet conditions	m³/min	60.4	9.7	71.2
	Icfm	2132	342	2515
Inlet pressure (abs.)	bar	1.012	1.012	1.012
	Psi	14.68	14.68	14.68
Pressure differential	mbar(g)	672	672	672
	Psig	9.74	9.74	9.74
Inlet temperature	°C	29.44	29.44	29.44
Discharge temperature	°C	97	148	95
Blower speed	RPM	1709	484	1971
Blower maximum speed	RPM	2400	2400	2400
% of maximum blower speed		71%	20%	82%
Power required at shaft	kW	84.3	23.6	99.3
	HP	113.0	31.6	133.2
Total Power (Wire to Air):	HP	125.1	35.0	147.5
Motor rating	**HP**	150.0		
Motor speed	RPM	1780	504	2054
Motor frequency	Hz	60	17	

Noise level without acoustic hood	dB(A)	101
Noise level with acoustic hood	dB(A)	79

Tolerances as per EN 10204, in accordance with standard ISO 1217:
Flow at inlet conditions / Power required at shaft +/- 5%

Blower package noise level:
Free field measurement at 1m from the complete blower package (tolerance +/- 2 dB(A))

Tests and measurements:
Blower stage: 1.5 hour flow test at the factory (Germany) on a calibrated test bed, at maximum operating conditions and according to DIN 1945. acceptance tolerance: +/- 5%.
A complete test report is available upon request.

On Site Commissioning
Available upon request, charges to be advised.
- Any commissioning activity is subject to two weeks prior notice and completion of commissioning checklist.
- Any on-site activity outside the time indicated will be billed according to the Aerzen Standard Rate Sheet

Exclusions
Control Panels, Motor Starters, Piping and Electrical Connections
* Unloading valves are required for reduced voltage starters

Warranty
Blowers including accessories are warranted for a period of 30mo / max 36mo after delivery and after provisional acceptance of the work against defects in workmanship and design. This warranty does not cover wearing parts unless such parts are defective during shipping / commissioning.
As per Aerzen standard warranty terms.

** Power at shaft excludes drive motor and belt drive

Aerzen Canada
980 rue Valois, Vaudreuil-Dorion, Québec J7V 8P2

Customer Reference: 510464 - Caesar Lanes
Aerzen Reference: 259014f

PRICING

	Unit Cost	Extended Cost	
Pressure Package - GM 90S DN 250	$ 61,340.00	$ 184,020.00	3 Units
OPTIONS			
Temperature switch c/w thermowell 120V	$ 780.00	$ 2,340.00	3 Units
Pressure switch 120V	$ 670.00	$ 2,010.00	3 Units
Optional Spare Parts			
1 Year Maintenance Kit	$ 1,370.00	$ 4,110.00	3 Units
2 Year Maintenance Kit	$ 2,340.00	$ 7,020.00	3 Units

TERMS AND CONDITIONS

INCOTERMS:	EXW - Aerzen Canada
Delivery:	Collect
Start-up Assistance / Operator Training:	As noted - page 2
Funds:	CAD
Payment terms:	120 days net Subject to credit approval and final destination of goods
Suggested Payment method	**10% upon order entry** **15% upon submission of documentation** **10% upon completion of major equipment purchase** **25% upon proof of material readiness** **40% upon readiness for shipment**
Taxes:	G.S.T. extra, P.S.T. charged in Quebec only
Prices firm until:	4/20/2025
Packing:	Heavy duty wooden skid with polyethylene wrapping included * Crown Frame * Special packing can be quoted upon request.
Warranty:	30mo / max 36mo after delivery
Estimated Delivery:	26 Weeks for the entire project Estimated delivery after technical approval

- to avoid warranty conflicts, we recommend that our start-up services be ordered and the inspection and operation procedures in our manual be respected.
- The goods remain the property of Aerzen Canada until full payment. Extended payment delays may void the warranty.
- Past due invoice amounts carry an interest charge calculated at 24% apr.
- Aerzen Canada reserves the right to change product specifications without prior notice.
- Aerzen can hold ready units free of charge for up to 3 weeks past agreed due date, after which storage fees will apply.

Attention:	**Robert Polo**
Company:	**Veolia Water Technologies & Solutions**
Phone No:	-
Fax No.:	-
E-Mail:	*robert.polo.ext@veolia.com*

From:	**Landy Lu**
Company:	Sulzer Pumps (Canada) Inc
Address:	151 Superior Blvd. Unit 3-7
	Mississauga,ON L5T 2L1
Phone No:	(905) 670-4677 Cell: (416) 881-1572
Fax No.:	-
E-Mail:	landy.lu@sulzer.com

SULZER

QUOTATION	Page 1
Quote No:	**63358**
Revision:	8
Date:	March 18, 2025
Prepared By:	Chris Chong
FCA:	Mississauga - ON
Delivery:	26 -28 WEEKS
Submittals:	
Finals:	
Warranty:	PER AGREEMENT
Terms:	PER AGREEMENT
Funds:	USD
Taxes:	Extra

Project: **Orange county of NY, USA**

ITEM	QTY	DESCRIPTION	UNIT NET	TOTAL NET
		*****Submersible Mixer - 34.5ft x 24ft x 18ft SWD ~ 0.8% MLSS*****		
	3	Sulzer Submersible Mixer,Model #RW6521-A60/12CR (Cast Iron,for Non Classified Area),6kW-571RPM,460/60/3,complete with 580mm propeller,double mechanical seals, bi-metal switches on stator plus Di seal probe,10m Cable. Accessories Included: *Mast Assy /w Floor/Inter/Upper Brkts,316SS (4"x4"SQ Guide Tube by Others) *Shock Absorber *Support Bracket,Shock Absorber,316SS *Power Cable Support Kit,20ft 316SS *Lifting Cable Assy,40ft 316SS *Relay,Heat Seal CA462,115V	$ 16,269.61	$ 48,808.84
	1	Spare Parts: Repair Kit /w Bearings and Mechanical Seals	$ 1,417.04	$ 1,417.04
		Additional Accessories (If Required)		
	1	Portable 24"-36" Adjustable Reach 60"H,1000LB Capacity /w Manual Handwinch	$ 4,270.60	$ 4,270.60
	3	Socket,Platform,316SS	$ 744.66	$ 2,233.99
		*****RAS Pump - Designed for Max 6,302GPM @ 12ft TDH*****		
	1	Sulzer End Suction Centrifugal Pump Model #APT52-16 (SO) /w Open Impeller,Cast Iron Volute/Stainless Steel Impeller,JC 5610 Cartridge Seal (SiC/SiC/EPDM,No Flush),Standard Baseplate,Severe duty 590RPM 30HP TEFC T 460/60/3 Foot-mounted,Inverter Duty Electric Motor	$ 57,057.90	$ 57,057.90
	1	Spare Parts: Mechanical Seal,Cartridge SiC/SiC	$ 5,145.26	$ 5,145.26
		*****Backpulse Pump - Duty Point 3703GPM @ 44ft TDH (22ft Static)*****		
	2	Sulzer Submersible Pump (Wet Pit),Model #XFP255J-CB2-PE430/6,43kW-1190RPM,460/60/3,complete with contrabock impeller,double mechanical seals,bi-metal switches plus Di seal probe,15m CSA Cable and DN250 Discharge. Accessories Included: *Guide Rail Assy /w Elbow and Upper Brkt DN250 (2"Dia Guide Pipe by Others) *Hardware Kit,SS *Lifting Chain 30ft Galv *Relay CA462 Heat/Seal 115V	$ 28,157.86	$56,315.73
	1	Spare Parts: Repair Kit /w Bearings and Mechanical Seals	$ 1,485.16	$1,485.16

.....continued

TOTAL

Attention:	**Robert Polo**
Company:	**Veolia Water Technologies & Solutions**
Phone No:	-
Fax No.:	-
E-Mail:	*robert.polo.ext@veolia.com*
From:	**Landy Lu**
Company:	Sulzer Pumps (Canada) Inc
Address:	151 Superior Blvd. Unit 3-7 Mississauga,ON L5T 2L1
Phone No:	(905) 670-4677 Cell: (416) 881-1572
Fax No.:	-
E-Mail:	landy.lu@sulzer.com

SULZER

QUOTATION	Page 2
Quote No:	**63358**
Revision:	8
Date:	March 18, 2025
Prepared By:	Chris Chong
FCA:	Mississauga - ON
Delivery:	26 -28 WEEKS
Submittals:	
Finals:	
Warranty:	PER AGREEMENT
Terms:	PER AGREEMENT
Funds:	USD
Taxes:	Extra

Project: **Orange county of NY, USA // 510464**

ITEM	QTY	DESCRIPTION	UNIT NET	TOTAL NET
		Notes: ‡.Thermal and seal leak protection are to be connected and operable for warranty coverage, where applicable ‡.Sulzer cannot release equipment to production until complete technical and contract approval have been achieved; please keep this in mind in regards to your project planning timeline ‡.Taxes and Shipping not Included ‡.Delivery times indicated are based on our current factory loading and subject to change at the time of order ‡.Terms Per Framework Purchase Agreement (Ref VEDAG20240051 - Dated Dec 19,2024) Will Apply ‡.All guide pipes (2" Dia) and tubes (4"x4"SQ), controls, anchor bolts as required by others		
			TOTAL	

SSI PROPOSAL

SSI Aeration Inc.



Aeration Performance Through Innovation



Fine Bubble Diffusers
Disc Type



Fine Bubble Diffusers
Tube Type



Coarse Bubble Diffusers
Reliability Built In

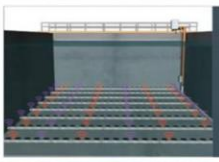

Telemetry Systems
Real Time Camera Monitoring



Advanced Membrane Materials
PTFE

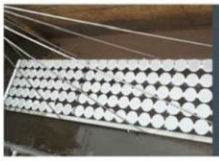

Retrievable Systems
Easy to Maintain



Complete Aeration Systems
Designed for You



OEM Replacement Membranes
Retrofit Existing Systems

SSI Aeration Inc.
4 Tucker Drive, Poughkeepsie,
NY 12603, United States America
Tel. +1 845-454-8171
Fax: +1 845-454-8094
Email: info@ssiaeration.com
www.ssiaeration.com

March 19, 2025.

File: Caesar MBR, NY (Veolia)_P-031925

VEOLIA

Attention: Maria Sepulveda
E-Mail: Maria.sepulveda@veolia.com
Phone: +1 804-756-7724

Ref: Caesar MBR, NY - **Proposal**

Sir/Madam,

In response to your email and based on the information, SSI as an ISO-9001 certified corporation is pleased to submit this proposal for the design, manufacture & supply of Aeration Equipment for **Three (3) Aerobic Tanks** with POD270-E Fine Bubble Disc Diffusers with EPDM Membranes.

Unless otherwise noted equipment supplied will meet or exceed any engineer specified performance requirements and/or called in the RFP/Email.

Design calculations & Preliminary Drawings showing the general arrangement of diffuser/Piping layouts are included (Refer item I& II).

A. **Scope of supply** is complete with all components from the downstream of air supply line connection (±6" above water level) starting with SS Vanstone and loose follower flange including drop pipe *(Isolation valve and associated accessories are not included in SSI supply limit)*

B. **Each Tank** is 106′ (L) X 24′ (W) X 17.5′ (SWD) and Aeration Equipment Supply *per Tank* is listed below:

Ø10" 304SS Drop pipe ±15′		Ø10" PVC Lower Drop +Manifold ±25′		Ø4" PVC Headers ±940′		**POD270-E diffusers**
304SS Supports	304SS Couplings	304SS Supports	PVC Couplings	304SS Supports	PVC Couplings	
2	1	5	1	180	54	**864**

COMMON FOR ALL TANKS

Total number of POD270-E Diffuser for Three (3) Aerobic Tanks=(864/Tank) * 3 = **2,592 Pcs**

C. Spares:

- POD270-E Diffuser Membranes-**18**
- Ø4" 304SS Supports - **5**
- Ø4" Repair Couplings–**2**
- Special Tools Set – **1**

D. F.O.B: Orange Town of NY, USA, 10962 (subject to change at actuals)

E. Manufacturer's Site Services: Two (2) days / One (1) trip

(For installation inspection, startup assistance and O& M Training)

F. TOTAL LUMP SUM PRICE (for all listed above) **$105,800.00**

G. GENERAL:

- SS pipe work is cleaned, degreased and acid washed for following the fabrication.
- Piping sections are supplied in 20' lengths maximum and connected at site with SS flanges (Factory welded) shipped along with piping.
- All SS welding/PVC Gluing is done in the factory and **NO** site welding/gluing involved in the installation of equipment.
- Each Grid is supplied with Moisture Purge System.
- All Supports are supplied with anchors and accessories.
- **Spares:** Included as above.
- **Site Services:** Included as above.
- SSI diffusers are manufactured under ISO9001.
- **Warranty:** Unless otherwise noted SSI's standard warranty/guarantee on the equipment supplied is for 18 months from the date of shipment or 12 months after the start up whichever occurs first. Warranty covers the workmanship and material of the listed items only. Any costs direct or indirect for transportation, site work, site repair/adjustments etc., are not covered under warranty. Further warranty is valid only when SSI or Its Representative/Associates approve/certify the installation. However, as the inspection is done randomly certification on installation does not make SSI liable or responsible for any direct or indirect installation failure(s).

H. PRICE IS:

1. In **USD**.
2. Valid for **15** days.
3. Above price does not consider Buy America products and if it is needed, price might change accordingly.
4. **Approval Submittal**: in electronic/digital files of all drawing and relevant technical information/data sheets and product cut sheets along with calculation if applicable **2-3 weeks** after receipt of P.O and all the information necessary to prepare submittals and O & Manual included in submittals.
5. Completion and ready to ship**: 14-18 Weeks** after receipt of approved submittal.
6. **F.O.B:** Orange Town of NY, USA, 10962 (subject to change at actuals)
7. Manufacturer's Service days included as above.

8. Unless noted otherwise specified all components/ items are shipped lose for field assembly if any. Field assembly, installation, site work and field testing by others.
9. Exclusions: *(unless noted otherwise)*
    - Offloading upon delivery to site.
    - Any items and services not itemized within the above scope of supply.
    - Blowers, Mixers, wall sleeves, isolated valves, air main piping.
    - Applicable taxes, custom duties, brokerage etc.,
10. Payment Terms:
    - For Municipal and Government Projects in USA: 30% with PO,30% with approved submittals and balance 40% prior to shipment.
    - Private projects in US and all overseas jobs: 30% with PO,30% with approved submittals and balance 40% prior to shipment (Subject to credit approval).
11. Cost Escalation Clause: SSI Aeration, Inc. has priced the job according to existing market conditions and costs at the time of quote. Due to wide fluctuations and increases in the price of stainless steel, carbon steel, PVC components we are experiencing in very short time frames, the sales price of the equipment might be subject to escalation in price in the event there are delays approving submittal, delays in delivery schedule and/or release to manufacture beyond what was quoted and beyond Seller's control. If there is a significant increase of material or freight occurring during the performance of the contract, the contract sums and/or time of completion shall be equitably adjusted by Change order. A change in price will be considered significant when the overall cost of the system increases by 10% or higher.
12. Escalation shall be based upon the increase in the Producer Price Index, U.S Department of Labour, Bureau of Labour Statistics-Group: Machinery and Equipment: Special Industry Machinery and Equipment, Series Id-WPU116 9the "Index"). The escalation shall be calculated based upon the percentage increase of the monthly index between the date of quotation and the date of receipt of order and submittal approval/release to manufacture (i.e.: the index of the month of when the order is received and released to manufacture minus the index for the month of quotation divided by the index for the month of quotation, multiplied by the quoted price). Note there is approximately 2–4-month delay in the publishing and finalizing of these indexes by the U.S Federal Government. Therefore, the escalation will be calculated at the time the index for both months has been published and finalized.

If you have any questions or if we can be of further assistance, please contact us.

Yours truly,
Stamford Scientific International Inc.

Kiran Kumar Banala,
Director of Application Engineering,
Tel: +1 845-454-8171 ext. 308
Fax: +1 845-454-8094
kiran@ssiaeration.com

I. Design calculations:

SSI Aeration Inc.
4 Tucker Drive
Poughkeepsie, N.Y. 12603
United States America.
Tel. +1 845-454-8171
Fax: +1 845-454-8094
Email: info@ssiaeration.com
www.ssiaeration.com

DIFFUSED AERATION SYSTEM

Doc #	**SD00010442**	Revision #	**3**
Project	**RFP052822**	Date	**8-19-2022**
Process Type	**AST**	Units	**Imperial**

Aerobic Tank design for 3 tank(s)			
Tank Type	**Aeration**	Tank Shape	**Rectangular**
Type of Input	**AOR**	Diffuser Type	**AFD270-1mm**

	Units	**condition**
Design Scenario		**Standard**
AOR	(Lbs/day)	15,000
AOR	(lbs O_2/hr)	625
Site Elevation	(ft)	25
Aerobic Tank Length per tank	(ft)	106
Aerobic Tank Width per tank	(ft)	24
Diffuser Water Depth	(ft)	16.5
SOR	**(lbs O_2/hr)**	**1,679.39**
Total Airflow	**(SCFM)**	**4,488**
Airflow Per Diffuser	**(SCFM)**	**1.73**
Diffuser Quantity	**(pcs)**	**2,592**
Diffuser Density	**(%)**	**13.92**
SOTE	**(%/ft)**	**2.17**
Total SOTE	**(%)**	**35.84**
Blower Pressure	(PSIG)	8.44
Pressure @ Top Of Dropleg	(PSIG)	7.87

Aerobic Tank design for 3 tank(s)		
	Units	**condition**
AOR	(Lbs/day)	15,000
AOR	(lbs O_2/hr)	625
MLSS	(mg/l)	8,500
Aeration Time	(hrs)	24
Liquid Temperature	(°C)	25
Ambient Air Temperature	(°C)	29.44
Site Elevation	(ft)	25
Barometric Pressure	(PSIG)	14.68
O_2 Uptake Rate	(mg/l/hr)	75.01
Minimum Diffuser Density	(%)	5
Alpha Factor	(α)	0.49
Fouling Factor	(F)	1
Beta Factor	(ß)	0.95
Theta Factor	(θ)	1.024
Dissolved Oxygen	(mg/l)	2
Aerobic Tank Length per tank	(ft)	106
Aerobic Tank Width per tank	(ft)	24
Side Water Depth	(ft)	17.5
Diffuser Water Depth	(ft)	16.5
Total Area of 3 tank(s).	(ft^2)	7,632
Tank Volume	(ft^3)	133,560
Tank Volume	(Million Gallons)	1
C *, Surface Saturation, Std., Meth	(mg/l)	8.26
Csw, Site Basin Saturation	(mg/l)	9.66
Css, Std., Basin Saturation	(mg/l)	10.64
SOR	(lbs O_2/hr)	1,679.39
SOR	(lbs O_2/day)	40,305.42
KLa20 - /hr		18.92
Required Mixing Energy	(SCFM/ft^2)	0.12
Airflow For Minimum Mixing	(SCFM)	915.84
Minimum Diffuser Quantity	(pcs)	931
SP O_2Transfer Rate	gr O_2/Nm^3-m	21.4
SAE	(lbs O_2/hp-h)	8.19
Blower Efficiency	(%)	70

Blower Power	(hp)	205.03
Estimated cost per kWh	(kWh)	0.11
Annual Operating Cost	(USD)	147,328.04

SSI 9” Disc Diffuser Systems

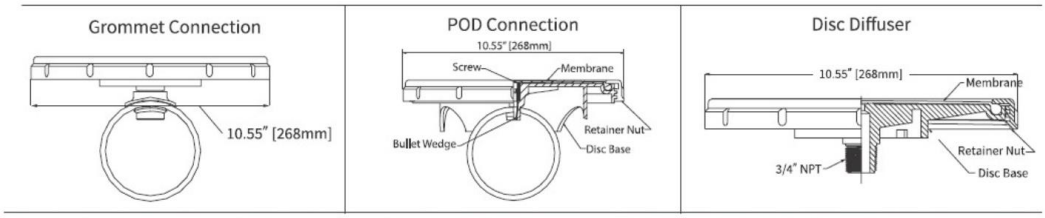



Limitation of Liability: The information contained in this Design is provided as a service exclusively to SSI clients and is intended to use with SSI products for Proposal/Quotation purpose only to be stamped or embossed with the SSI corporate seal for validation/approval. We accept no liability for the accuracy of self-generated designs.

Notes:

-

Thank you very much for your enquiry. This is a computer generated design.

II. Preliminary Drawings:

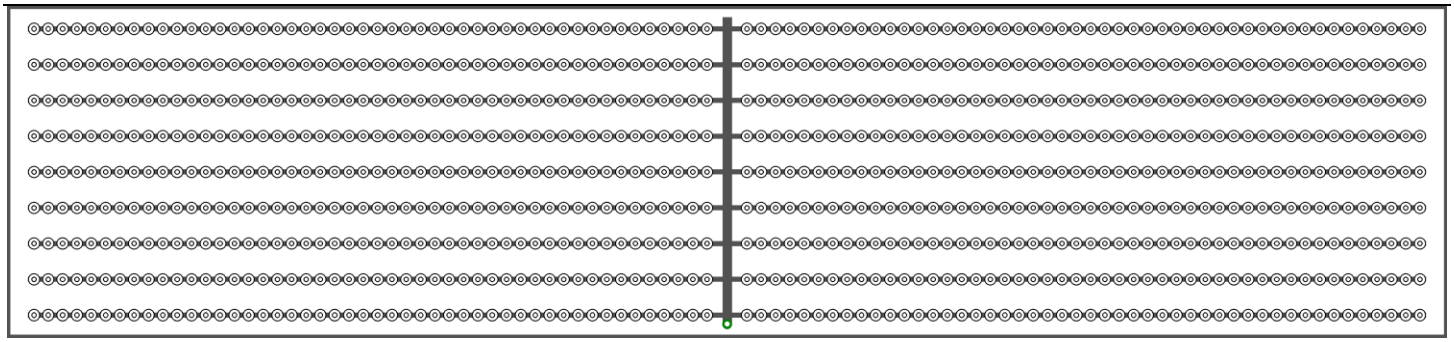

Note: This schematic layout is for conceptual purpose not for construction.

Aerobic Tank - 106' (L) X 24' (W) X 17'-6" (SWD)
ONE (1) SHOWN THREE (3) REQUIRED

Grid Details
18-HEADERS PER GRID @ 2'-7.68" C-C
48-DIFFUSERS PER HEADER @ 1'-0.71" C-C
864-DIFFUSERS PER GRID

POD270 9" Disc Diffuser

SSI Aeration
SMART IDEAS FOR WATER

What Makes the **SSI POD 9" Disc Diffuser Accessory** an Expert Choice?

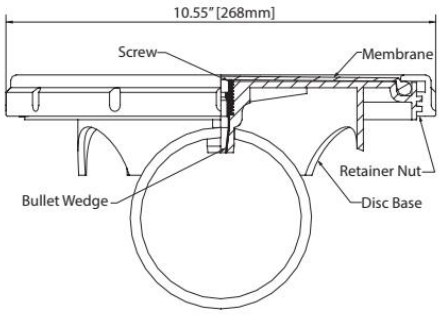

The POD™ is an excellent option for municipal and industrial wastewater treatment plants interested in saving time and expense in labor involving installations, routine operational maintenance and the need to investigate the source of recurring problematic leaks.

Factory assembled diffusers mounted on laterals save contractors up to 30% on assembly time. PODS are a viable solution if you want to tank down for a minimum period, if your labor costs are high, or if you have a field labor shortage. For engineers unsure about the skill set of a contractor's field labor, SSI PODS are worry free with fewer field connections, and most connections created in controlled factory settings by trained personnel and automatic machines.



SSI Aeration

4 Tucker Drive
Poughkeepsie, New York 12603 USA
www.sssiaeration.com tel: +1 (845) 454-8171
email: info@ssiaeration.com fax: +1 (845) 454-8094

POD270 9" Disc Diffuser

Unique System Strengths

Complete product line – creating the system that fits your needs
SSI manufactures disc diffusers and coarse bubble diffusers, and we mount these products on a wide range of piping materials including PVC, CPVC, PP and Stainless Steel. We have the ability to attach diffusers to pipe using saddles, grommets, or pre-assembled PODS. We can provide retrievable systems or fixed grids, and systems in kit form or mostly factory assembled. We try to understand and anticipate your needs, and fit our recommendations to your situation.

Piping system integrity – thicker wall pipe and double anchors for fewer breakages
Our piping is 38% thicker and has double rod support stands as standard – two anchors for each support location means twice the resistance to hydraulic and thermal loads. Most often supports fail due to temperature and water velocity. SSI locates two anchors where support is needed most, helping to increase product longevity.

Comprehensive design service and after sales support
SSI provides full design services, including biological and mixing calculations, process simulations and hydraulic studies. We maintain a full drafting department with 3D and animation capabilities and we can assist with specifications and CAD drawings. Our service and installation crew can hold your hand during the early stages of the project and our worldwide multilingual staff is dedicated to your complete satisfaction.

Intelligent Upgrade Options

Patented PTFE membranes prolong efficiency and reduce whole-life costs
SSI's patented PTFE membrane barrier properties not only reduce plasticizer extraction, shrinking, and membrane hardening but also limit dynamic changes that can result from swell, such as creep. Compared with uncoated products that are more susceptible to increases in DWP due to more aggressive fouling and changes in physical properties and weight, the PTFE coated membrane improves consistency of DWP (Headloss) values over the product life. This directly impacts long-term power costs and the ability of the system to distribute air uniformly across the tank floor.

SSI Telemetry – the inside story solves maintenance problems
At the click of a mouse, you will know the DWP of your diffuser membranes, airflow rate to those monitored diffusers, and air temperature in the submerged piping system. You can sense vibration, pipe roll over, and water in the grid. Automatic moisture purging and automatic acid dosing systems are available. Through multiple cameras, you can see both inside the grids, and surface bubble patterns. Wet probes are also available for DO and WW temperature. Tracking all this data on a user-friendly online dashboard facilitates communication between consultant and client, manufacturer and rep. This smart technology lets you locate problem areas and allocate resources more efficiently. SSI Telemetry is your preventive maintenance hub in the heart of the plant.

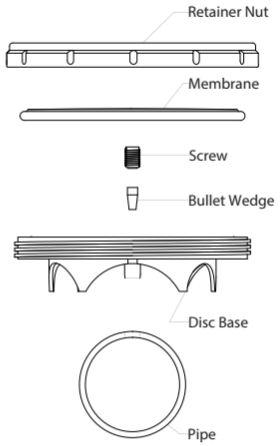

EXPLODED DRAWING

Pods Installation Procedure

Insert POD diffuser into the pipe hole (17mm). Then insert wedge bullet in to the base. Insert wedge screw and rotate set screw after that place membrane over the base plate. Then hand tighten retainer nut on to the base until unable to be turned further.Then use Spanner Wrench tighten the retaining nut further 1/4 turn to complete installation.

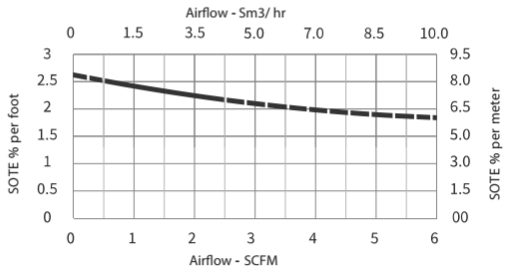

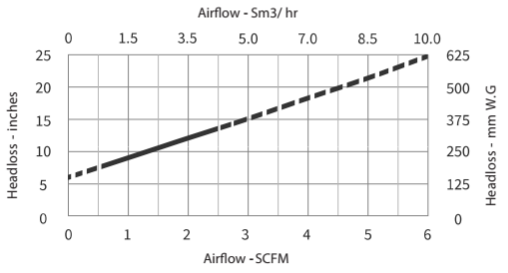

SSI
www.ssiaeration.com

ANAB Certified to ISO 9001:2015 TÜVRheinland

SSI Aeration Inc. 4 Tucker Drive, Poughkeepsie, NY 12603 United States America.
Tel. +1 845-454-8171 Fax: +1 845-454-8094, Email: info@ssiaeration.com

TECHNICAL DATA SHEET

SSI™ ACCESSORIES

QCTS SADDLES



Quick Connect NPT Saddles mount on nominal US 3" or metric 88.9mm, 90mm OD, US 4" or 114.3mm and 110mm OD pipe. They allow retrofit of 12" to 9"discs without changing the piping system.

QCTS Saddle

Quick Connect NPT Saddles are made of polypropylene, and install into a 5/8" (16mm) hole. changing the piping system.

GROMMETS



Grommets are available for round plastic or square stainless steel pipes in US or Metric dimensions. Installation is simple. Multiple sizes are available based on pipe wall thickness. Grommets install into a 1-1/4" (32mm) chamfered hole.

EXPANSION JOIN OPTIONS



Rigid Bolted SS

Expansion Joints are available in three types: Flexible PVC with SS Shell, Rigid Bolted SS, and Anti-rotation, Telescoping PVC. The flexible expansion joints are recommended for disc installations and the positive locking type for tube diffuser projects.



Flexible PVC w/SS shell

Slotted band joints with stainless steel shear rings are suitable for disc-type fine bubble and cap-type coarse bubble lateral plastic piping systems, in conjunction with SSI's fixed and guide support stand system to manage thermal expansion and contraction.

Positive locking bolted stainless steel couplings are suitable for drop pipes, stainless joints, and for all tube diffuser piping systems to restrict header pipe rotation.



Anti-rotatio Telescoping PVC

SI's Sliding Expansion Joint is an anti-rotational telescopic union which absorbs pipe expansion and contraction to up to 1.5" (38mm).

CLAMP SADDLES



Clamp Saddles are avialable to suit different pipe sizes and its installed on 1" to 4" pipes with 5/8" (16mm) hole.Clamp Saddles are also easy to install using bolt, nuts and washers. Clamp saddles are typically made from metal or plastic. Metal clamps are more durable

BOLTED SADDLE



SSI manufactures nominal 2",3" and 4" Quick Bolted Saddles QTS269 for both 2.375"/60.3mm O.D pipes, QTS390 for both 3.5"/ 90mm O.D pipes and QTS4110 for 4.5"/110mm O.D pipes . Quick Threaded Bolted Saddles are made of talc-filled polypropylene, and installation into a 5/8" (16mm) hole with an O-ring (ORQTS). Easily install Quick threaded saddle on pipe using SSI's special channel-lock pliers.

Please see reverse for additional technical data

SSI Aeration
SMART IDEAS FOR WATER

SSI AERATION, INC.

+1-845-454-8171 TEL
+1-845-454-8094 FAX

4 TUCKER DRIVE
POUGHKEEPSIE, NEW YORK 12603 USA
www.ssiaeration.com
EMAIL: info@ssiaeration.com

TECHNICAL DATA SHEET

SSI™ ACCESSORIES *continued*

MOISTURE PURGE SYSTEM

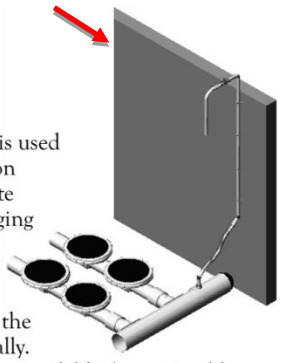

An airlift type purge system is used in all SSI fine bubble aeration systems to remove condensate from the piping system. Purging entrained water helps ensure even air distribution to all diffusers in a grid. A ball valve is supplied with the system and is opened manually. Continuous purge systems are available for retrievable-type aeration systems, or where it is not possible to fasten a purge line to a tank wall.

PRESSURE MONITORING SYSTEM

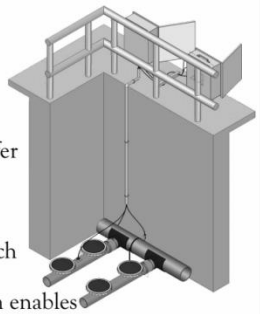

Throughout the life of an aeration system, oxygen transfer efficiency may decline somewhat when diffusers become fouled, but headloss can increase dramatically which in turn increases energy costs. A pressure monitoring system enables the operator to better determine the optimal cleaning frequency of the membranes. The fouling rate can vary by aeration zone, hence it is recommended to install at least one system in each zone.

SUPPORT STANDS



Support Stands are available in 304SS, 316SS or in ABS plastic. SSI's standard is 304SS with drop-in anchor bolts. In our aeration piping systems, support stands fulfill the dual role of anchoring pipes to the floor and controlling thermal expansion and contraction. Special support stands for uneven tank floors, for installing into concrete ballast forms, and for tanks with significant channel velocity (with lateral supports) are also available. ABS support stands are primarily used with disc diffusers and plastic pipe, where a low capital cost is the primary objective.

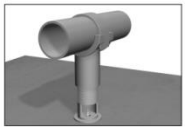

ABS plastic support stand

TELEMETRY SYSTEM

Adding a Telemetry System to your aeration system will allow you to remotely monitor factors inside your tank from any PC, tablet or mobile device. Telemetry can be installed in new systems or retrofitted through an end cap into existing systems. Telemetry sensors are available to monitor variables in your system such as temperature, vibration, humidity, water detection, DO, and other environmental factors.

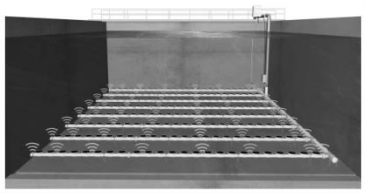

ACID DOSING SYSTEM

In-situ Acid Dosing Systems are available to control calcareous deposits in the perforations which will reduce membrane backpressure.

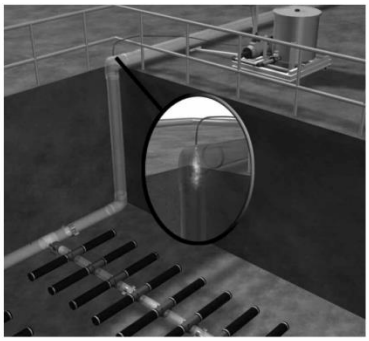

SSI Aeration
SMART IDEAS FOR WATER

SSI AERATION, INC.

+1-845-454-8171 TEL
+1-845-454-8094 FAX

4 TUCKER DRIVE
POUGHKEEPSIE, NEW YORK 12603 USA
www.ssiaeration.com
EMAIL: info@ssiaeration.com

SSI – SSI Aeration, Inc.

Standard Terms and Conditions of Sale

1. **General:** All products and services offered for sale by Stamford Scientific International, Inc. (hereinafter "Seller") or its subsidiaries or through its distributors or sales representatives are sold subject to the terms and conditions stated herein. This offer expressly limits acceptance to the terms hereof and any additional, different or inconsistent terms proposed by Buyer, whether in writing or otherwise, are hereby objected to and rejected and Seller shall not be bound thereby unless expressly agreed in a writing signed by an officer of the Seller that such terms and conditions shall supersede those contained herein.

2. **Estimates and Quotations**: All prices are subject to adjustment on account of specifications, quantities, shipment arrangements or other terms and conditions, which are not part of the original price quotation. Written estimates issued by the Seller will be valid for 30 days only. Products are sold at prices in effect at the time the order is taken. The company reserves the right to change prices without notice when necessary.

3. **Terms and Method of Payment**: For Buyers with established credit, payment of accounts due must be made within 30 days of shipment FOB Seller facility or 30 days after the goods are ready to ship and Buyer is notified of same. Seller may make partial billings of the contract price or invoice as various components of the equipment are shipped. Partial payments are expected to be made according to partial goods shipped. Custom built and special large orders shall require deposits in advance of production together with progress payments. For Buyers without credit, payment will be by company check, bank draft, Visa or Mastercard, telegraphic transfer or irrevocable letter of credit at time of order or progress payments according to quote offer. The Buyer shall not be entitled to withhold payment of any sums due to the Seller by reason of any disputed claim by the customer relating to any goods or deliveries. If Buyer fails to make payment by the due dates then without prejudice to any other rights of the Seller: The Seller shall be entitled to suspend all or any other deliveries to be made under that or any other contract with the Buyer and in such event the Buyer shall not in any respect be released from its obligations to the Seller under that or any such other contract. The Seller shall also be entitled to treat the relevant contract or any other contract with the Buyer as having been terminated by the Buyer and to claim damages for breach of contract accordingly.

4. **Taxes**: Product prices do not include taxes. The amount of any present or future sales, use, excise, value-added or similar tax if applicable to the sale shall be paid by the Buyer unless a tax exemption certificate acceptable to the tax authorities is approved. If Seller is required to pay any such tax, fee or charge, Buyer shall reimburse Seller therefore.

5. **Delays in Delivery and Force Majeure**: All quoted delivery dates are approximate. The Seller will make commercially reasonable efforts to meet any delivery date(s) quoted in the agreement. However, under no circumstances shall the Seller be liable to Buyer for any delay in shipment or failure to meet any quoted delivery date(s) due to unforeseen circumstances or due to a cause beyond its control. Examples of such causes are acts of God, wars, riots, embargoes, acts of civil or military authorities, fires, floods, accidents, strikes, transportation delays, inability to obtain materials or supplies, interruption for any reason in the manufacture of products by Seller's supplies or other causes not within Seller's control.

6. **Warranty/Repairs**: Products manufactured by Seller are warranted to be free from defects in materials or workmanship for 18 months from date of shipment or 12 months from the date of start up, whichever comes first. Parts found to be defective in materials or workmanship will be repaired or replaced without charge, F.O.B. original point of shipment. The forgoing warranty is in lieu of and excludes all other warranties expressed or implied (including any warranty of merchantability or fitness or purpose). The responsibility of the Seller is limited to the cost of the defective part. Wear caused by faulty maintenance or operation shall not constitute defects. Elastomeric components damaged as a result of maintenance activities, excessive airflow, foreign debris in the process solution, or excessive exposure to direct ultraviolet and thermal radiation shall be excluded. Decomposition by chemical action and chemical precipitate shall not constitute defects. Claims for defective, damaged or improper material or for shortages will not be allowed unless written notice specifying the nature and extent of the defect, damage or shortage is received in the Seller's office within fourteen (14) days from delivery. Seller assumes no responsibility of expense for repairs made on equipment sold by it to Buyer when such repairs are done outside Seller's factory facilities without its written consent. In all cases, a Start-Up certificate issued by SSI is for general conformance to the Manufacturer's installation instructions only after audit for work performed. However, in no cases, SSI can audit 100% of all work performed by others and cannot guarantee their work to fully meet our installation instructions. Warranty for installation labor and services provided by others shall be covered by the warranty of the entity performing those services. Failure by the Installer to fully meet our installation instructions and requirements may result in installation errors which may lead to equipment failure, for which Seller shall not be liable.

7. **Cancellation and Returns Policy**: (A) Cancellations: Any request for order cancellation, rescheduling or modification by Buyer must be made in writing and such action must be approved in writing by an officer of Seller. Such request should be made to Seller at least four (4) weeks from scheduled shipment date in order to be considered. Such cancellation, rescheduling or modification shall be subject to the payment of reasonable cancellation charges, which shall include but not be limited to expenses already incurred for labor and material costs, commitments made by Seller and a reasonable profit. (B) Returns: Any request for product return by Buyer must be made in writing. Returns of products will not be accepted for any reason without prior written consent of Seller and issuance of a Return Material Authorization (RMA) number. Return of products must be shipped freight prepaid by Buyer. Seller will not accept freight charges. Returns may be subject to a 15% restocking fee and any other reasonable charges. Returns made without obtaining prior authorization shall be returned to sender at Buyer's expense. Custom made goods may not be returned under any circumstance.

8. **Limitation of Liability: Notwithstanding anything else to the contrary, Seller shall have no liability for consequential, incidental, punitive, indirect and/or special damages regarding the sale or use of a product even if the potential for such damages has been disclosed to Seller. Seller's total liability for product defect claims shall not exceed the purchase price paid for the product.**

9. **Complete Agreement**: These Terms and Conditions of Sale when combined with Seller's invoice represent the entire agreement between the parties with respect to the subject matter hereof. Language contained in any digital or written instrument from Buyer to Seller serving to modify the terms of any of the foregoing shall be of no effect.

10. **Severability**: If any provision of these Terms and Conditions of Sale shall be deemed illegal or unenforceable, such illegality or unenforceability shall not affect the validity and enforceability of any other provisions hereof, which together shall be construed as if such illegal and unenforceable provision or provisions had not been included herein.

11. **No Waiver**: The failure by Seller to enforce at any time any of the provisions of this agreement, or to exercise any election or option provided herein, shall not be a waiver and shall in no way be construed as a waiver of such provisions or options, nor in any way be construed to affect the validity of this agreement or any part thereof, or the right of Seller thereafter to enforce each and every such provision.

12. **No Indemnification**: Unless otherwise expressly provided in writing by both parties, Seller does not indemnify, nor does it hold Buyer harmless, against any liability, losses, damages and expenses (including attorney's fees) relating to any claim whatsoever, including without limitation, claims for personal injuries, death or property damage related to the products sold hereunder.

13. **Governing Law**; Limitations: The relationship between Buyer and Seller in relation to the products shall be governed by and construed in accordance with the laws of the State of New York, U.S.A. Any legal action with respect to any transaction must be commenced within one year after the cause of action has arisen.

14. **Dispute Resolution**: Actions by Seller for nonpayment by Buyer of the purchase price of products sold by Seller, or for redress of other breaches by Buyer of these Terms and Conditions of Sale, may be brought by Seller, at its option, before any court of competent jurisdiction in the State of New York. At Seller's option, disputes between Buyer and Seller, including all claims for non-performance by Seller, shall be finally settled by arbitration in Poughkeepsie, New York USA.

15. **Foreign Corrupt Practices Act**: Buyer represents and warrants to Seller that it shall comply with all laws in relation to its sale and/or use of the Products and will not pay anything of value to any government employee in connection with the sale of the Products.

16. **Precedence**: In the event of any inconsistency among the referenced documents, attachments, drawings, specifications or other provisions hereof, the following order of precedence shall apply: (1) special terms and conditions agreed to in writing by an Officer of the Seller, (2) these standard terms and conditions of sale, (3) specifications, (4) all other attachments or documents incorporated herein by reference.

DeZURIK QUOTATION

To: VEOLIA WATER TECHNOLOGIES &
3239 DUNDAS STREET W.
OAKVILLE ON L6M 4B2
Canada

Invoice Terms: Net 45

Days Valid: 30 day(s)

Delivery Terms: FFA, Prepaid and Allow

Date of Quote: 01/23/2024

Project Name: 511132 Veolia Ontario Project

I.D. (Rep. Use):

Line of Business: 4941 Water Treatment

Make Order To: Floval Equipment Ltd
250 Rayette Road, Unit 1
Concord Ontario L4K 2G6
Canada
Alex Popov
Tel/Direct:905.669.4500 or 800-387-3784
apopov@floval.com

Currency and Values expressed in CAD ($)

ANY PURCHASE ORDER ISSUED AS A RESULT OF THIS QUOTATION IS SUBJECT TO ALL OF THE MANUFACTURER'S CONDITIONS SET FORTH IN THIS DOCUMENT HEREOF, REASONABLE CONTRACT LANGUAGE NEGOTIATIONS AND FINAL ACCEPTANCE BY DEZURIK AT SARTELL, MN USA. UNLESS OTHERWISE NOTED, QUOTATIONS ARE VALID FOR 30 DAYS. UNTIL ACCEPTANCE OF ORDER, QUOTED PRICES AND DELIVERY ARE SUBJECT TO CHANGE. UNLESS OTHERWISE NOTED, PRICES ARE FIRM FOR SHIPMENT OF GOODS WITHIN 12 MONTHS FROM THE RELEVANT QUOTATION DATE. OUR PRICES ARE BASED ON CURRENT PRICES FOR MATERIAL. IF A SIGNIFICANT MATERIAL PRICE INCREASE OCCURS BETWEEN ORDER ACCEPTANCE AND SHIPMENT DATE, GOODS SCHEDULED TO SHIP BEYOND 12 MONTHS OF THE QUOTATION DATE ARE SUBJECT TO A PRICE ADJUSTMENT BY THE AMOUNT NECESSARY TO COVER SUCH AN INCREASE.

Line#	Cust. Line #	Qty	Order Code	Unit Price	Total Price
1		4	DeZURIK 16" V-PORT ball valve with CS body Style: VPB - V-Port Ball Valve Size: 16 Inch (400mm) End Connection: Flanged Drilling; Class 150, ISA 75.08.02 and IEC 534-3-2F-F Body Material: Carbon Steel Packing: PTFE Chevron; Temperature to 500° F. (250° C.) Ball Material: 317 SST; Heat Treated; Electroless Nickel Overlay to 700 Degree F. Shaft Material: 2205 Duplex Stainless Steel Seat: Rigid 317 Stainless Steel; Heat Treated; Electroless Nickel Overlay; Temperature to 450 Degree F. Bushing: 317 SST Wire Mesh Encapsulated in PTFE Liner to 500 Degree F. Coating: Exterior: 4 mils minimum of Blue Epoxy DeZURIK with Standard (SP10) surface prep Actuator: PowerRac Cylinder; 8 In Dia Weight (Approx): 777 lbs/ 353 kgs Max Temperature: 450 Degrees F.	$41,202.00	$164,808.00
2		4	DeZURIK 14" V-PORT ball valve with CS body Style: V-Port Ball Valve	$34,285.50	$137,142.00

DeZURIK QUOTATION

Line#	Cust. Line #	Qty	Order Code	Unit Price	Total Price
			Size: 14 - 14 Inch (350mm) End Connection: Flanged Drilling; Class 150, ISA 75.08.02 and IEC 534-3-2F-F Body Material: Carbon Steel Packing: PTFE Chevron; Temperature to 500° F. (250° C.) Ball Material: 317 SST; Heat Treated; Electroless Nickel Overlay to 700 Degree F. Shaft Material: 2205 Duplex Stainless Steel Seat: Rigid 317 Stainless Steel; Heat Treated; Electroless Nickel Overlay; Temperature to 450 Degree F. Bushing: 317 SST Wire Mesh Encapsulated in PTFE Liner to 500 Degree F. Coating: Exterior: 4 mils minimum of Blue DeZURIK Epoxy with Standard (SP10) surface prep Actuator: PowerRac Cylinder; 8 In Dia Weight (Approx): 642 lbs/ 292 kgs Max Temperature: 450 Degrees F.		

*Estimated manufacturing lead times included in this quotation are defined as "after release of order to production" (ARO) and are subject to change based upon availability of parts and manufacturing capacity at the time the goods are released to production. Production orders are considered released to production upon receipt. Manufacturing lead times do not include transit lead times. Estimated lead times are based upon the items and quantities listed on the quotation. Any changes to order codes and/or quantities may result in changes to manufacturing lead times.

MANUFACTURER'S CONDITIONS

These conditions apply to all quotations, orders and contracts for DeZURIK Canada, Inc. ("we," "us" or "our")

1. CONSTRUCTION AND LEGAL EFFECT: Our sale to you (defined as the purchaser of goods from us) is limited to and expressly made conditional on your assent to these typed and printed terms and conditions of sale, the face and reverse side hereof ('These Terms"), all of which form a part of the agreement to sell and which supersede and reject all prior writings (including your order), representations, negotiations with respect hereto and any conflicting terms and conditions of yours, any statement therein to the contrary notwithstanding. No waiver, alteration or modification of These Terms shall be binding on DeZURIK unless agreed to in writing by an authorized officer of DeZURIK. The sending of the purchase order for the goods referred to herein, whether or not signed by you, or your acceptance of the goods or payment operates as acceptance by you of These Terms and shall be deemed an agreement by you that you have read These Terms and that you understand and agree to be bound by same. In case of conflict between These Terms and the terms of your purchase order or acceptance, These Terms govern; any different or conflicting terms submitted by you in any purchase order or acceptance shall be deemed objected to by us and shall be of no effect unless specifically agreed to by us in writing. We will furnish only the quantities and goods specifically listed on the face hereof or the pages attached hereto, or any updates or modifications to the same purchase order. We assume no responsibility for other terms or conditions or for furnishing other equipment or material shown in any plans and/or specifications for a project to which the goods quoted or ordered herein pertain or refer. Our published or quoted terms and conditions are subject to change without notice prior to acceptance of order.

2. PRICES: Unless otherwise noted on the face hereof, quotations are valid for 30 days, prices are net, FCA Incoterms 2020, our factory. Stenographic, clerical and mathematical errors are subject to correction. Until acceptance of order on These Terms, quoted prices and delivery are subject to change. Thereafter, unless otherwise noted, prices are firm for shipment of goods within 12 months from the relevant quotation date. Our prices are based on current prices for material. We will endeavor to obtain the lowest pricing on materials from our suppliers, but if a significant material price increase occurs between order acceptance and shipment date, goods scheduled to ship beyond 12 months of the quotation date are subject to a price adjustment by an amount necessary to cover such increase.

3. DELIVERY: Dates for the furnishing of services and/or delivery or shipment of goods are approximate only and are subject to change. Quoted lead times are figured from the later of date of acceptance of order on These Terms or from the date of receipt of complete technical data and approved drawings as such may be necessary. We shall not be liable, directly or indirectly, for any delay in or failure to perform caused by an act or omission by you, carriers or suppliers or delays from labor difficulties, shortages of suitable parts, materials or labor, strikes or stoppages of any sort, failure or delay in obtaining materials, customer requested order changes, fires, floods, storms, accidents, government restrictions, epidemics, pandemics, causes designated acts of God or force majeure by any statute or court of law or other causes beyond our reasonable control.

4. SHORTAGE, DAMAGE,ERRORS IN SHIPMENT: Our responsibility ceases upon delivery to carrier. Risk of loss, injury or destruction of property, shall be borne by you from and after our delivery to carrier, and such loss, injury or destruction shall not release you from the obligation to pay the purchase price. You shall note receipt for goods that are not in accordance with bill of lading or express receipt and you shall make claim against such carrier for any shortage, damage or discrepancy in the shipment per the ICC Code for Freight Claims promptly. You shall inspect and examine all items and goods covered by the order when unpacking crated or boxed goods, and if damage is discovered, leave as is until the carrier's agent makes examination and notation on freight or express bill of concealed damage. We will render reasonable assistance to help trace and recover lost goods and collect just claims as a business courtesy, but without obligation. We do not guarantee safe delivery.

5. TAXES: Our prices do not include sales, use, excise, occupation, processing, transportation or other similar taxes which we may be required to pay or collect with respect to any of the materials covered hereby under existing or future law. Consequently, in addition to the price specified herein, such taxes, including, without limitation, GST/HST, shall be paid by you, or you shall provide us with a tax exemption certificate acceptable to the appropriate taxing authorities. You shall also assume and pay any import or export duties and taxes, with respect to the materials covered by the order, and shall hold harmless and reimburse us therefrom.

6. CREDIT AND PAYMENT: Unless otherwise noted on the face hereof, payment of goods shall be 100% thirty (30) days net in Canadian dollars. Payment shall be made: (a) in full without setoff, counterclaim, or deduction, from date of invoice or goods are delivered, whichever is earliest and (b) not contingent on payment from or approval of any third party. Prorated payments shall become due with partial shipments. We reserve the right at any time to suspend credit or to change credit terms provided herein or elsewhere, when, in our sole opinion, your willingness or ability to pay your obligations to us in doubt. Failure to pay invoices at maturity date, at our election, makes all subsequent invoices immediately due and payable irrespective of terms, and we may withhold all subsequent deliveries until the full account is settled and we shall not, in such event, be liable for non-performance of contract in whole or in part. You agree to pay, without formal notice, 1.5% per month of the amount not paid when due, provided that, if such rate is in excess of applicable governing law, you agree to pay the maximum permitted rate. For the purposes of the *Interest Act* (Canada) and disclosure under such statute, whenever interest to be paid under These Terms is to be calculated on the basis of any period of time that is less than a calendar year, the yearly rate of interest to which the rate determined pursuant to such calculation is equivalent is the rate so determined multiplied by the actual number of days in the calendar year in which the same is to be ascertained and divided by such other period of time. DeZURIK may further hold the goods if there are any amounts outstanding.

7. CANCELLATIONS AND CHANGES: Orders which have been accepted by us are not subject to your cancellation or changes in specifications, except upon our written consent, and we may require, as a condition of such consent, appropriate modification charges and adjustments in price, delivery schedule and other relevant terms, and in the case of cancellation, cancellation charges. In the event we accept your cancellation, you shall be liable for a cancellation charge equal to the higher of (i) 25% of the purchase price of the items or (ii) any loss or cost incurred by us, including, but not limited to, cost of materials, labor, engineering, reconditioning and reasonable overhead.

8. DEFERRED SHIPMENT: If shipment is deferred at your request, payment of the contract price shall become due when you are notified that the equipment is ready for shipment. If you fail to make payment and furnish shipping instructions, we may either extend time for so doing or cancel the contract. In case of deferred shipment at your request, storage and other reasonable expenses attributable to such delay shall be payable by you.

9. LIMITED WARRANTY: Products, auxiliaries and parts thereof that we manufacture for a period of twenty-four (24) months from the date of shipment from our factory, are warranted to the original purchaser only against defective workmanship and material, but only if properly stored, installed, operated and serviced in accordance with our recommendations and instructions. For items proven to be defective within the warranty period, hour exclusive remedy under this limited warranty is repair or replacement of the defective item, at our option, FCA Incoterms 2020 our facility with removal, transportation and installation at your cost. Products or parts manufactured by others but furnished by us are not covered under this limited warranty. We may provide repair or replacement for other's products or parts only to the extent provided in and honored by our original manufacturer's warranty to us, in each case subject to the limitations contained in the original manufacturer's warranty. No claim for transportation, labor or indirect, incidental, special or consequential damages or any other loss, cost or damage is being provided in this limited warranty. You shall be solely responsible for determining suitability for use and in no event shall we be liable in this respect. This limited warranty does not warrant that any product or part we manufacture is resistant to corrosion, erosion, abrasion or other sources of failure, nor do we warrant a minimum length of service. Your failure to give written notice to us of any alleged defect under this warranty within twenty (20) days of its discovery, or attempts by someone other than us or our authorized representatives to remedy the alleged defects therein, or failure to return product or parts for repair or replacement as herein provided, or failure to store, install, or operate said products and parts according to the recommendations and instructions furnished by us shall be a waiver by you of all rights under this limited warranty to the fullest extent permissible under applicable law. This limited warranty is voided by any misuse, modification, abuse or alteration of our product or part, accident, fire, flood or other Act of God, or failure to pay entire contract price when due. The foregoing limited warranty shall be null and void if, after shipment from our factory, the item is modified in any way or a component of another manufacturer, such as but not limited to, an actuator is attached to the item by anyone other than our factory authorized service personnel. All orders accepted shall be deemed accepted subject to this limited warranty, which shall be exclusive of any other or previous warranty, and this shall be the only effective guarantee or warranty binding on us, despite anything to the contrary contained in the purchase order or represented by any agent or employee of ours, in writing or otherwise, notwithstanding, including but not limited to implied warranties.

TO THE FULLEST EXTENT PERMISSIBLE UNDER APPLICABLE LAW, THE FOREGOING REPAIR AND REPLACEMENT LIMITED WARRANTY IS IN LIEU OF ALL OTHER WARRANTIES, OBLIGATIONS AND LIABILITIES, INCLUDING, BUT NOT LIMITED TO, ALL WARRANTIES OF FITNESS FOR A PARTICULAR PURPOSE OR OF MERCHANTABILITY OR OTHERWISE, EXPRESSED OR IMPLIED IN FACT OR BY LAW, AND STATE OUR ENTIRE AND EXCLUSIVE LIABILITY AND YOUR EXCLUSIVE REMEDY FOR ANY CLAIM IN CONNECTION WITH THE SALE AND FURNISHING OF SERVICES, GOODS OR PARTS, THEIR DESIGN, SUITABILITY FOR USE, INSTALLATION OR OPERATIONS WHETHER BASED ON CONTRACT, WARRANTY, TORT (INCLUDING NEGLIGENCE) OR ANY OTHER THEORY OF LEGAL LIABILITY. . NEITHER ANY PERFORMANCE OR OTHER CONDUCT, NOR ANY ORAL OR WRITTEN INFORMATION, STATEMENT OR ADVICE PROVIDED BY US OR ANY OF OUR EMPLOYEES OR AGENTS WILL CREATE A WARRANTY, OR IN ANY WAY INCREASE THE SCOPE OR DURATION OF THIS LIMITED WARRANTY.

10. INTELLECTUAL PROPERTY. We shall indemnify and hold you harmless from any amount that you are required to pay to a third-party pursuant to final, non-appealable court order as a result of such third-party's claim that a product sold hereunder infringes any United States or Canadian patent, copyright or industrial design of such third party; provided that our obligation of indemnification is contingent upon (a) your notifying us in writing of any such claim within 20 days of receipt thereof, (b) your providing us with exclusive control of the defense and/or settlement thereof, and (c) your cooperating with us in such defense and/or settlement. In the event of such a successful infringement claim by the third party, at our option, we shall either (i) modify the product sold hereunder so that it performs comparable functions without infringement, (ii) obtain a royalty-free license for you to continue using the infringing product or (iii) refund to you the then-depreciated fair market value of the infringing component. We shall have no obligation under this Section to the extent a claim is based upon (a) the combination, operation or use of the product with equipment, products, hardware, software, systems or data that was not provided by us, if such infringement would have been avoided in the absence of such combination, operation or use, or (b) your use of the product in any manner inconsistent with our written materials regarding the use of such product. This Section states our entire liability and your exclusive remedy with respect to any alleged infringement arising from the use of the products sold hereunder or any part thereof and is subject to the other limitations contained in These Terms.

11. LIMITATION OF LIABILITY: IN NO EVENT SHALL WE BE LIABLE FOR ANY DIRECT, INDIRECT, SPECIAL, INCIDENTAL OR CONSEQUENTIAL, EXEMPLARY OR PUNITIVE DAMAGES OR OTHER SIMILAR DAMAGES, OR PROSPECTIVE PROFITS, INCLUDING BUT NOT LIMITED TO, LOSS OF PROFITS OR REVENUE, LOSS OF USE OF THE GOODS OR ANY ASSOCIATED PRODUCT, BUSINESS INTERRUPTION, COST OF CAPITAL, COST OF SUBSTITUTE PRODUCTS, FACILITIES OR SERVICES, DOWNTIME COSTS, DIMINUTION IN VALUE, OR CLAIMS OF YOUR CUSTOMERS FOR SUCH DAMAGE AND TO THE FULLEST EXTENT PERMISSIBLE UNDER APPLICABLE LAW, OUR LIABILITY, UNDER NO CIRCUMSTANCES, WILL EXCEED THE CONTRACT PRICE FOR THE GOODS AND/OR SERVICES FOR WHICH LIABILITY IS CLAIMED, ANY ACTION FOR BREACH OF CONTRACT BY YOU, OTHER THAN RIGHTS RESPECTING OUR LIMITED WARRANTY DESCRIBED IN SECTION 9 ABOVE, MUST BE COMMENCED WITHIN 12 MONTHS AFTER THE DATE OF SALE. IN NO EVENT SHALL WE BE LIABLE FOR ANY DESIGN ERRORS RELATING TO DRAWINGS PROVIDED BY YOU WITH RESPECT TO THE MANUFACTURE OF THE GOODS.

12. EXPORT CONTROL COMPLIANCE: You agree and acknowledge that the products are sold in accordance with Canadian or U.S. export control and sanctions laws, regulations and orders, as they may be amended from time to time. You agree to ascertain and comply with all applicable export and re-export obligations and restrictions, including without limitation, Canadian and U.S. export and re-export controls under the Export Administration Regulations ("EAR") and Export and Import Permit Act (EIPA), International Traffic in Arms Regulations ("ITAR"), and all regulations and orders administered by the U.S. Department of Treasury, Office of Foreign Assets Control (collectively, "U.S. Export Control Laws") and International Trade Canada (Global Affairs Canada). If you are conducting the export from the United States or the re-export from a country outside the United States, you shall comply with such U.S. Export Control Laws and obtain any license or other authorization required to export or re-export the products and related technology. We shall reasonably cooperate and exercise reasonable efforts, at your expense, to support you in obtaining any necessary licenses or authorizations. You shall not export or re-export the products and/or related technology to any country or entity to which such export or re-export is prohibited, including, but not limited to, any country or entity under sanction or embargoes administered by the United States and /or Canada. Any diversion contrary to the law of the United States or Canada is prohibited. You will not take, and will not solicit us to take, any action that would violate any anti-boycott or any export or import statutes or regulations of the United States or other governmental authorities, and shall defend and indemnify us for any loss or damage arising out of or related to such actions.

13. GENERAL COMPLIANCE WITH LAWS. In addition to your obligations under Section 12 above, you represent and warrant that, in performing your duties under this Agreement, you will comply with, at your sole expense, all applicable laws and regulations of any governmental authority, including, but not limited to, your duties involving any required registrations, requirements as to product contents, packaging and labeling, restraint of trade, consumer laws, data privacy, export regulations, and environmental laws. You agree and acknowledge you have had an opportunity to obtain legal advice regarding, and currently comply with, all applicable legal requirements that prohibit unfair, fraudulent or corrupt business practices, including, but not limited to, the Corruption of Foreign Public Officials Act (Canada), the Proceeds of Crime (Money Laundering) and Terrorist Financing Act (Canada) as well as Canadian and all other applicable laws and requirements that are designed to combat terrorism and terrorist activities.

14. INDEMNIFICATION BY YOU. You will indemnify, defend and hold us and our corporate parents and other affiliates and their respective officers, directors, stockholders, members, insurers, attorneys, employees, agents, successors, predecessors, assigns, heirs and personal representatives harmless against any and all liability, claims, suits, actions, losses, liabilities, damages, costs and legal fees arising out of or related to: (i) any conduct by you or any related party as described in Sections 12 or 13 above; or (ii) your breach of any other provision herein.

15. PROPRIETARY INFORMATION. All specifications, drawings, data, manuals, designs, information, ideas, methods, patterns and inventions made, conceived, developed or generated by us incident to the procurement or performance of this order ("Work Product") will vest in, inure to and be the sole property of us. You will not copy, publish or otherwise disclose, in whole or in part, to others such Work Product without the express prior written permission of us. You will not use information furnished hereunder for any purpose other than for operation and maintenance of the goods and services or for any purpose other than as explicitly intended by us. The rights and obligations in this Section 15 will survive termination or expiration of this order. .

16. ARBITRATION: Any controversy or claim arising out of or relating to this Agreement or the breach thereof shall be settled by binding arbitration in accordance with the provisions of the *Arbitration Act* (Ontario) and judgment on the award rendered by the arbitrator may be entered in any court having jurisdiction thereof. The arbitration shall be conducted by a single arbitrator. The arbitration shall take place in Toronto, Ontario.

17. APPLICABLE LAW: The rights and duties of the parties shall be governed by the laws of the Province of Ontario and the federal laws of Canada applicable therein, without regard to its conflict of law provisions. You agree that the *United Nations Convention on Contracts for the International Sale of Goods* shall not apply to These Terms.

18. NO OTHER CONTRACT PROVISIONS; OTHER: These Terms reflect the entire agreement with respect to the products. Terms and conditions of your order shall be without force and effect, except to the extent identical herewith. No dealer, broker, branch manager, agent, employee or representative of ours has any power of authority except to take orders for our products and to submit the same to us, at our factory, for our approval and acceptance on the terms herein or rejection. There are no representations, agreements, obligations, or conditions, expressed or implied, statutory or otherwise, relating to the subject matter hereof, other than herein contained. DeZURIK Canada, Inc. and related terms (we, us and our) shall refer to DeZURIK Canada, Inc. and its affiliates. If any provision hereof is invalid or not enforceable under applicable law, the remaining provisions shall remain in full force and effect. Any assignment of your rights hereunder without our consent (which shall not be unreasonably withheld) shall be void. These Terms shall be binding on your successors and assigns. Our failure to require your performance of any of These Terms shall not serve as a waiver of or diminish our rights to require strict performance of such provision or These Terms. You acknowledge and are satisfied that These Terms be drawn up in the English language. *L'acheteur reconnaît avoir exigé que les présentes soient rédigées en anglais et s'en declare satisfait.*

ENGINEERING PROD. LTD.

5540 Pare Street
Montréal, Québec
H4P 2M1

Tél. (514) 342-5656
Fax (514) 342-3131
www.acmeprod.com
info@acmeprod.com

MANUFACTURERS OF ENVIRONMENTAL CONTROLS AND SYSTEMS

March 21, 2025

Quote Number: Q220609-Rev2

Re: Basket Strainers

Project: SUEZ - Tap Water Intake Filtration

We are pleased to quote you on the following:

IFC Model: 16-B125FIB1

Strainer type: Cast Iron Basket Strainer

Inlet/Outlet Connection: 16", 125#. FF Flanges per ASME B16.1

Body, Cover & Manifold Material: A126-B CAST IRON

Basket filtration: 1mm perforated screen. Option for 2mm at no extra cost.

Basket Material: 304 Stainless Steel

Cover Type: Bolted Flange

Cover Gasket: Graphite

Drain Connection: 2" NPT c/w Plug

Design Pressure: 150 PSI @ 150°F

Unit Price: $ 16,388.00 CAD each.

Note(s): 1 psid pressure drop at 3700 GPM with 0.4 mm clean screen.

Delivery: 2-3 Weeks ARO

ExWorks: ACME Warehouse, Montreal, Canada

Terms: Net 30 days.

Validity: 30 days.

Best regards,
Kiana Vahdani

Project Coordinator
Acme Engineering Prod.

Customer Address:

Veolia Water Technologies & Solutions
Canada GP
3239 Dundas Street West
Oakville ON L6M 4B2

Tel.: 905-465-3030-3051

E-mail: vtc.vwts.poacknowledge.all@veolia.com

QUOTATION

Document Number: CA-3125101024
Document Date: 17-Mar-25
Customer Number: 20016
Quoted By: Ben Sun

Application:

Project 510464 Casear Lanes - ProSIP FMB & Veolia Mag Dr

Dear Maria,

Per your request, Prominent Fluid Controls Ltd. is pleased to submit the enclosed proposal for your favourable consideration and approval.
Please reference quotation number in the purchase order.

Should you have any additional questions, please do not hesitate to contact us immediately.

Sincerely,

Ben Sun
Customer Service Coordinator
Tel: 519-780-3013
Email: sun.ben@prominent.com
cc: Michael Buckley, Account Manager (PFC)

DELIVERY:
Estimated Shipping: 4-5 Weeks after acknowledgment of an order (ARO)

FREIGHT: Ex-works ProMinent plant in Guelph, Ontario

Terms & Conditions:
Payment: 100% with order or Net 120 days, upon approved credit
Price: Canadian dollars, ExWorks, Guelph, ON
Taxes: Not Included, Extra Where applicable
Offer Validity: 120 Days

NOTES:
1. Delivery times are based on stock at time of quoting and it is subject to change depending on when order is issued.
2. Any drawings included with this quote are conceptual only.
3. Cancellation fees will apply to all orders over $10,000.00 (Contact ProMinent for details).
4. All equipment/systems quoted are meant for INDOOR use only, unless otherwise specified.
5. The equipment/system is for general purpose only; quote does not include ASME, MTR, CRN, and TSSA, ABSA or equal. registration.
6. Quote MUST be referenced at time of order.
7. Custom ordered items are NON-RETURNABLE

QUOTATION

Document Number: CA-3125101024
Document Date: 17-Mar-25

Item	Quantity	UoM	Material	Description	Unit Price CAD	Total Price CAD
SECTION 001			NaOH Dosing Skid	Total List: 28,317.44	Total Net:	18,810.38
000010	1	EA	1061538	ProSIP-FMB-2P-S-1.5-PC-E-DN32	11,390.16	11,390.16
				Discount: 35.00 %	-3,986.56	-3,986.56
				Net Price:	7,403.60	7,403.60
				ProMinent ProSip-FMB: Shared Relief Line This two (2) pump package provides a high quality system at an economical price. Design for two pumps to operate in a Duty/Stand-by configuration with only one pump operating at a time. As standard, the package includes a 0-160 PSI pressure gauge, a calibration column, back pressure valve and a pressure relief valve. Designed for use with ProMinent DN32 sized Sigma pumps. For package details, see drawing number: 1061538-200 Line Size: 1.5 Inch Piping Material: PVC Seal Materials: EPDM Design Pressure: 150psi Packages are designed and built in Canada and include a 3 year leak free guarantee with a completed warranty form.		
000020	1	EA	1095110	ProSIP Series Junction Box	1,182.30	1,182.30
				Discount: 35.00 %	-413.81	-413.81
				Net Price:	768.49	768.49
				ProSIP Mount Junction Box for One or Two pump arrangements, solenoid and motor driven pumps for 120 VAC / Single Phase Power Supply. Nema 4X Junction box for control cables as well as relay outputs of pumps. Separate Nema 3R Receptacle Box to Allow for pump plug in. Panel is mounted directly to skid. Customer Material Number: INSTALLED ON PROSIP		
000030	2	EA	S3C2	Motor-Driven Metering Pump Sigma X Control Type – Sigma 3 - S3Cb	7,872.49	15,744.98
				Net Price:	5,290.32	10,580.63
				Please click on the link below for more information about the Sigma 3 pump: https://www.prominent.ca/en/Products/Products/Metering-Pumps/Motor-Driven-Metering-Pumps/p-sigma-3-control-type-motor-driven.html		

QUOTATION

Document Number: CA-3125101024
Document Date: 17-Mar-25

Item	Quantity	UoM	Material	Description	Unit Price CAD	Total Price CAD
				Note: GFCI's cannot be used with Sigma series pumps Ident.Code: S3CBH070410PVTS170UD11001EN Flow: 132.1GPH / 500L/H Pressure: 100PSI / 7BAR Options Included: dosing head material PV PVDF seal material T st.diaphragm / PTFE seal displacement material S Mult.-diaphragm detector opt execution of dosing head 1 w/o.vent valve, w. valvespr. hydraulic connection 7 union nut and insert PVDF execution 0 w. PM-Logo El. power supply U 100 - 240 V cable and plug D 2m USA relay function 1 1 power relay control version 1 Manual+cont.+p.c+Analog.+d overpressure shut-off 0 Not Available for S3Cb control unit 0 HMI w.Click Wheel (0,5m ca access code 1 w. contr. access contr. dyn languages EN english approval 07 MET (USA) Customer Material Number: INSTALLED ON PROSIP		
000040	2	EA	1001300	Universal Control Cable: 6 ft. (2m), 5 wire, 5 pole Special Net Price:	28.83	57.66
				Customer Material Number: ATTACHED TO PUMP		
SECTION 002		Hypo Dosing Skid			Total Net:	23,458.58
000050	1	EA	1122683	VEOLIA-ProSIP MAGF-P2-S1.5-D1.0-PVC-VITON-460V Special Net Price:	23,458.58	23,458.58
				Ref. Drawing: 1122683-200 This pre-engineered package is a floor-mounted system for two (2) pumps. Stand Configuration: Floor Mount (PE Frame) Pump Configuration: Two Pumps (Duty/Standby) Suction Line Size: 1.5" PVC Suction Termination Point: 1.5" FF flange 150#, PVC Discharge Line Size: 1" PVC Discharge Termination Point: 1" FF flange 150#, PVC Piping Material: PVC Schedule 80/Socket Weld Seal Material: Viton Standard Items: Relief Valve: 1/2" PVC/Teflon 15-145 psig adjustable		

QUOTATION

Document Number: CA-3125101024
Document Date: 17-Mar-25

Item	Quantity	UoM	Material	Description	Unit Price CAD	Total Price CAD
				Pressure Gauge: PVC isolator, gauge 0-15 psig (suction)/ PVC isolator, gauge 0-60 psig (discharge) Ball Valve: 1/2", 1" and 1-1/2" PVC/Viton (vented) Check Valve: 1" PVC/Viton Diaphragm Valve: 1" PVC/Viton Actuated Ball Valve: 1" PVC/Viton ball valve (vented) with spring return pneumatic actuator, 24 VDC Magnetic flowmeter: model Promag P 300, 5P3B25, DN25 1" with grounding disc, 24 VDC Junction Box: NEMA 4X FRP only for flowmeter and actuated valve (PN 1122451) Pumps Installed: -Pump type: MAG Drive Pump -Model: DB9V-R-FF-M219 -Body: PVDF -Impeller Bushing: Ceramic -O-Ring: FKM -Connection: FRP ANSI 150# -Impeller Size: 4.18" -Magnet Set: 8-Pole -Motor: 1.0 HP, 3 ph/60 Hz/208-230/460V, 3450 rpm, TEFC -VFD: Not included -Maximum Flow Rate @ discharge pressure*: 29.5 USGPM at 14 psig -Minimum Flow Rate @ discharge pressure*: 0.5 USGPM at 29 psig *Please, see pump performance curve to determine flow capacity and discharge pressure. Ship Loose Item: Y-Strainer: 1-1/2" PVC/Viton (Qty:1) Documentation & Testing: *Standard packages do not include any testing or quality documentation (internal QA & testing done without formal documentation). *Exception is taken to any customer specifications, VDL's, ITP's or witnessed inspections. *Standard IOM manual provided. Exception is taken in the entirety, to any additional documentation not specifically listed in the quote submittal. *Additional documentation must be requested at time of quote and will result in the package becoming custom (impacts to cost and delivery will be subject to requested documentation)		
SECTION 003		Citric Dosing Skid			Total Net:	23,458.58
000060	1	EA	1122685	VEOLIA-ProSIP MAGF-P2-S1.5-D1.0-PVC-EPDM-460V		
				Special Net Price:	23,458.58	23,458.58
				Ref. Drawing: 1122685-200 This pre-engineered package is a floor-mounted system for two (2) pumps.		

QUOTATION

Document Number: CA-3125101024
Document Date: 17-Mar-25

Item	Quantity	UoM	Material	Description	Unit Price CAD	Total Price CAD

Stand Configuration: Floor Mount (PE Frame)
Pump Configuration: Two Pumps (Duty/Standby)
Suction Line Size: 1.5" PVC
Suction Termination Point: 1.5" FF flange 150#, PVC
Discharge Line Size: 1" PVC
Discharge Termination Point: 1" FF flange 150#, PVC
Piping Material: PVC Schedule 80/Socket Weld
Seal Material: EPDM

Standard Items:
Relief Valve: 1/2" PVC/Teflon 15-145 psig adjustable
Pressure Gauge: PVC isolator, gauge 0-15 psig (suction)/
PVC isolator, gauge 0-60 psig (discharge)
Ball Valve: 1/2", 1" and 1-1/2" PVC/EPDM
Check Valve: 1" PVC/EPDM
Diaphragm Valve: 1" PVC/EPDM
Actuated Ball Valve: 1" PVC/EPDM ball valve with
spring return pneumatic actuator, 24 VDC
Magnetic flowmeter: model Promag P 300, 5P3B25, DN25 1" with
grounding disc, 24 VDC
Junction Box: NEMA 4X FRP only for flowmeter and actuated
valve (PN 1122451)

Pumps Installed:
-Pump type: MAG Drive Pump
-Model: DB9V-R-E-FF-M219
-Body: PVDF
-Impeller Bushing: Ceramic
-O-Ring: EPDM
-Connection: FRP ANSI 150#
-Impeller Size: 4.18"
-Magnet Set: 8-Pole
-Motor: 1.0 HP, 3 ph/60 Hz/208-230/460V, 3450 rpm, TEFC
-VFD: Not included
-Maximum Flow Rate @ discharge pressure*: 29.5 USGPM at 14 psig
-Minimum Flow Rate @ discharge pressure*: 0.5 USGPM at 29 psig
*Please, see pump performance curve to determine flow capacity
and discharge pressure.

Ship Loose Item:
Y-Strainer: 1-1/2" PVC/EPDM (Qty:1)

Documentation & Testing:
*Standard packages do not include any testing or quality documentation
(internal QA & testing done without formal documentation).
*Exception is taken to any customer specifications, VDL's, ITP's or
witnessed inspections.
*Standard IOM manual provided. Exception is taken in the entirety, to
any additional documentation not specifically listed in the quote
submittal.
*Additional documentation must be requested at time of quote and will
result in the package becoming custom (impacts to cost and delivery will

QUOTATION

Document Number: CA-3125101024
Document Date: 17-Mar-25

Item	Quantity	UoM	Material	Description	Unit Price CAD	Total Price CAD
				be subject to requested documentation)		

Price	65,727.54
Total Price	65,727.54

ProMinent Fluid Controls, Ltd.
490 Southgate Drive
Guelph, Ontario N1G 4P5

Phone: (888) 709-9933
Fax: (519)836-5226
eMail: sales-can@prominent.com
Internet: www.prominent.com

Veolia Water Technologies

3239 Dundas Street West

Oakville, ON

L6M 4B2

Kind Attn.: Robert Polo

Contact Number: 416-277-8332

Email: robert.polo.ext@veolia.com

RFQ Number: Email Dated 23.01.2024

Products: Air compressor Package

Project: 510464 – Caesar Lanes

Good day Robert,

We thank you for providing us with an opportunity to quote for this project.

In response to your request for quote, we are pleased to offer our proposal # 4839671 Rev.02 which includes the following items:

- Two (2) x Atlas Copco Piston Compressor Model **CR7.5-TS-80Gal Vertical 460/3/60-IS, TN4** (Simplex, Two-Stage, Splash Lubricated, Full Cast Iron Piston Compressor) mounted on an **80 Gallon** vertical air receiver. Options 120 Gallon Vertical vessel is provided,
- Two (2) x Atlas Copco standalone refrigerant dryers model **FXHT15**,
- Two (2) x Atlas Copco standalone refrigerant dryers model **FX15 (as option)**.

Note 1: All the equipment will be shipped loose, to be installed by the customer at site.

Also, note that all our equipment in scope of supply will come with CSA approval and CRN registration for all provinces in Canada.

We have included full technical and commercial details for your evaluation. Should additional information be required, please do not hesitate to contact our office.

We trust the enclosed is to your satisfaction and we look forward to your response and further discussions.

Looking forward to your valuable business,

Best Regards,

Mehdi Raeesian – MSc., C.Eng, P.Eng

Sr. Technical Sales Engineer

ATLAS COPCO COMPRESSORS CANADA

Atlas Copco Compressors Canada
5060 Levy
Saint--Laurent
Quebec, Canada H4R 2P1

Toll Free: 800-667-9875
Tel: 51 4.421 .4121
Fax: 514.421.2092
Email: compressors.canada@atlascopco.com
Web: www.atlascopco.com

TPS/GST Reg No. 13395645b RT0004
TVQ/QST Registered No. 1013760892
TQ0002
ISO 9001:2008 REGISTERED

Remettre à\Remit To : Atlas Copco
Compressors Canada c/o M11702C Case
Postal 11702 Succursale Centre-Ville
Montreal, Québec, H3C 6L2

Atlas Copco Compressors Canada

Visitor Address: Unit 276, 2880 – 45 Avenue SE, Calgary, AB T2B 3M1

Phone: +1 403 259 6069 - Mobile: +1 587 926 0135 - Fax: +1 514 421 20 92
E-mail: Mehdi.Raeesian@Atlascopco.com

Visit Atlas Copco at: https://www.atlascopco.com/en-ca/compressors
Follow us at: Facebook - LinkedIn - Twitter - YouTube - Instagram

Home of Industrial Ideas

Contents

Technical / Commercial Summary ***4***

Terms and Conditions ***7***

List of Attachments ***8***

Technical / Commercial Summary

(All Equipment are Vendor Standard)

Item	Product No.	Product Description	Qty	Unit Value (CAD)	Total Price (CAD)
1.0	**2020 0418 25**	**CR7.5-TS-80Gal Vertical 460/3/60-IS,TN4**	**2**	**6,850.00**	**13,700.00**

Atlas Copco 7.5 HP two-stage splash lubricated piston air compressor mounted on **80 gallon** Vertical air vessel Model **CR7.5-TS-80Gal Vertical 460/3/60-IS,TN4**

➢ Key Features



- Cast iron design to ensure durability and reliability for all demanding applications
- Fully enclosed belt guard for additional equipment safety
- ASME safety valves
- Stainless steel valves
- Aftercooler included for lower compressed air outlet temperature
- Low oil level switch is included
- Start/Stop pressure switch control
- Magnetic starter is included
- Electric Drain for tank is Included
- TEFC motor and NEMA 4 control panel are included
- 1-year bumper-to-bumper warranty

➢ Characteristics

- Maximum air pressure: 175 psig
- Free air delivery: 23.6 cfm @ 175 psig
- Connection: 3/4" NPT
- Voltage: 460V / 3Ph / 60Hz
- Dimensions: 32" x 26" x 75" (L x W x H)
- Weight: 599 lbs

➢ High-Efficiency Electric Motor

- 7.5 HP
- 460 Vac / 3 Ph / 60

Please refer attached documents for the working principle and specifications.

1.1	**Custom Design**	**Cost adder to upgrade the Vessel to 120 Gallon Vertical**	**2**	**2,600.00**	**5,200.00**

Item	Product No.	Product Description	Qty	Unit Value (CAD)	Total Price (CAD)
2.0	**8102 8098 22**	**Refrigerant Dryer**	**2**	**2,200.00**	**4,400.00**

Atlas Copco **FXHT15** high temperature refrigerant air dryer. Removes any condensate from the compressed air and provides a steady pressure dew point as low as +4°C.



➢ Required compressed air quality at lowest cost

- Increased reliability and lifetime of tools and equipment.
- Constant operation with inlet air temperature of up to 82°C.
- Digital display for precise visual monitoring of pressure dew point and dryer performance.
- Plug-and-play installation.
- Sustainable refrigerant to ensure lowest possible carbon footprint and energy consumption.

➢ Five operational units in one:

- Air Cooled After Cooler
- Refrigerant Air Dryer
- Moisture Separator
- Electronic Adjustable Dain Valve
- Oil / Dirt Removing

➢ Characteristics:

- Maximum working pressure: 232 psig
- Inlet capacity: 25 cfm
- Pressure drop at full flow: 0.52 psig
- Connections: 3/4" NPT
- Voltage: 115V / 1Ph / 60Hz
- Dimensions: 14" x 15" x 19" (L x W x H)
- Weight: 161 lbs

Please refer attached documents for the working principle and specifications.

3.0	**8102 2293 37**	**Refrigerant Dryer (Option)**	**2**	**1,800.00**	**3,600.00**

Item	Product No.	Product Description	Qty	Unit Value (CAD)	Total Price (CAD)
		Atlas Copco **FX15** refrigerant air dryer. Removes any condensate from the compressed air and provides a steady pressure dew point as low as +3 to +4°C. ➢ **Required compressed air quality at lowest cost** • Increased reliability and lifetime of tools • and equipment. • Digital display for precise visual monitoring of pressure dew point and dryer performance. • Plug-and-play installation. • Sustainable refrigerant to ensure lowest possible carbon footprint and energy consumption.  ➢ **Characteristics:** • Maximum working pressure:s 232 psig • Inlet capacity: 30 cfm • Pressure drop at full flow: 3.63 psig • Connections: 3/4 " NPT • Voltage: 115V / 1Ph / 60Hz • Dimensions: 20" x 14" x 18" (L x W x H) • Weight: 44 lbs **See attached Scope of Supply for the complete equipment description.**			
4.0	Documentation / Contract Handling / Drawings / Drawing Approval Process / Parts and Instruction Manuals / Vendor Coordination / Engineering Hours Only standard documentation will be provided.	1	$ 1,500.00 Ea.	$ 1,500.00 Ttl.
5.0	Startup, commissioning, and basic operator training (overview of machine and controller navigation) by an Atlas Copco Certified Service Technician (One day)	1	Extra	Extra
6.0	Spare Parts for Startup and Commissioning	1	Not Required	Not Required
7.0	Spare Parts for operation	1	Extra	Extra
8.0	Shipment to customer site	1	Extra	Extra

Terms and Conditions

Prices Valid For:	60 Days
Delivery:	15-16 Weeks (to be finalized at the time of PO)
Payment:	100% upon shipment
Terms:	(Net 30 Days)
Currency:	Canadian Dollars
Taxes/GST:	Extra
Delivery:	FCA-Our Warehouse in Montreal

Warranty

- Stationary oil-injected rotary screw compressors:
  - Extended Warranty*: 5 years from start-up for Screw Element
  - Extended Warranty*: 2 years from start-up for Electric Main Drive (motor) and Variable speed Drive (VSD)
  - 12 months from start-up or 18 months from shipment, whichever comes first for entire unit (bumper to bumper)
- All warranties are Ex-Works Atlas Copco Compressors Canada nearest branch

Standard documentation

- Standard drawings (general arrangement, PID, electrical, installation) can be supplied if requested
- O&M manuals are supplied in pdf format

* - All units eligible for Extended Warranty (Screw Element, Motor and VSD) coverage must be (i) registered with Atlas Copco Canada within the first 3 months after the start-up, (ii) maintained and inspected from the start-up according to Atlas Copco preventive maintenance guidelines listed in the instruction manual (delivered together with the compressor) using genuine Atlas Copco parts and lubricants.

List of Attachments

1- Piston Compressor Documents (Brochures, Description, Diagrams…)
2- Dryer Documents (Brochures, Description, Diagrams…)

Appendix C
Escalation Basis

Veolia Water Technologies & Solutions
Head office: 3600 Horizon Blvd. Trevose, PA 19053
off. +1-215-533-0000 - fax +215-633-0000
www.veolia.com

<Local office address> <City>, <State> <Country>
off. <Local telephone #> - fax <Local fax #>

Nov 7, 2022

Water Technologies & Solutions

Town of New Windsor
555 Union Avenue
New Windsor
USA 12553

SUEZ WTS Systems USA Inc.
3239 Dundas St. W.
Oakville, ON L6M 4B2
Canada
Tel: +1 905 465 3030

Attention: Kelly Allegra, Town Clerk

Subject: Caesars Lane Wastewater Treatment Facility
MBR Pre-selection
Town of New Windsor
SUEZ Proposal 360077 – July 20, 2022
Price Escalation

Dear Kelly,

As stated in our price proposal, the applicable portion of SUEZ price subject to escalation is $2,520,225.00 USD. The breakdown of this amount is provided below:

Item	Amount $USD
SUEZ membranes	$1,345,407.36
Quoted third party equipment	$ 663,545.46
SUEZ cost databases / negotiated pricing agreements	$ 392,798.18
Freight	$ 118,474.00
Total	**$2,520,225.00**

As shown, most of the cost of the MBR system (>53%) comes from the membranes (modules and cassettes), which we fabricate at our own facility. For the remaining equipment costs, we received third party quotes during the bid for approximately 60% of the equipment and derived the other 40% of the equipment costs from standard SUEZ cost databases and negotiated sub-vendor pricing agreements. The remainder of price that is subject to escalation is associated with freight.

Escalation – SUEZ Membranes and Cassettes

As specified in the RFP, we would like to propose an alternative method of price escalation for consideration by the Town for the membrane and cassette portion of the price breakdown. This will simplify the escalation calculation and may be preferred since a significant portion of the cost is internal to SUEZ WTS. The proposed escalation is as follows:

The applicable portion of the equipment supply contract price will be adjusted based on the greater of $0 USD, or Weighted Price Index + 1% calculated monthly from the bid opening date (July 2022) to the most recent monthly Price Index value available on the NTP date provided to

SUEZ by the General Contractor to order equipment.

The proposed price indices and their relative weighting for the membranes and cassettes cost escalation calculation are as follows:

1. 40%:PPI Metal and Metal Products WPU10
2: 60% PPI Plastic Products WPU072

The referenced indices are as published by US Department of Labor, Bureau of Labor and Statistics.

Quoted Third Party Equipment

Quoted Third Party Equipment costs are attached in Appendix 1. The total value is $643,545.46 USD.

Cost Databases & Negotiated Pricing Agreements

A cost breakdown of items costed from SUEZ cost databases / negotiated pricing agreements is provided below and attached. This information is “Confidential and Proprietary Information and is for the exclusive use of the Town of New Windsor and MHE in determining price escalation for the Caesars Lane WTP project.

Item	Amount $USD
Manual Valves	$39,636.69
Automatic Valves	$15,375.89
Membrane Tank Cassette & Instrumentation Brackets, Hangers & Braces	$92,012.56
Instrumentation & Controls	$211,778.00
Miscellaneous Ancillary Equipment	$17,711.37
Spares	$16,283.66
Total	**$392,798.18**

These costs are documented by an electronic Excel spreadsheet to be provided as an attachment to this letter.

Freight

Freight costs are a combination of internal and external freight costs. Internal freight costs to ship equipment to SUEZ in Oakville, ON, Canada are estimated as $94,584.00 USD. External costs to ship equipment from Oakville, ON, Canada to the project site are estimated as $ 23,890.00 USD. Total freight costs are $ 118,474.00 USD.

Let us know if you have any questions or concerns related to this issue.

Regards,

Graham Best
Regional Sales Manager

SUEZ WTS SYSTEMS USA, INC.

Caesars Lane – Quotes Summary

1. Aerzen membrane and process blower
2. Sulzer submersible mixer, RAS pump, and BP pump,
3. SSI fine bubble diffuser
4. DeZurik V-Port control valve – CS body
5. Prominent sampling pump
6. ACME bucket strainer
7. Prominent chemical dosing skid - sodium hypochlorite and citric acid
8. IBC tank
9. Atlas Copco compressor

SUEZ Water Technologies & Solutions
Confidential and Proprietary Information
The enclosed materials are considered proprietary property of SUEZ Water Technologies & Solutions (SUEZ). No assignments either implied or expressed, of intellectual property rights, data, know-how, trade secrets or licenses of use thereof are given. All information is provided exclusively to the addressee and agents of the addressee for the purposes of evaluation and is not to be reproduced or divulged to other parties, nor used for manufacture or other means, without the express written consent of SUEZ. The acceptance of this document will be construed as an acceptance of the foregoing.

Aerzen Canada
980 rue Valois, Vaudreuil-Dorion, Québec J7V 8P2

Customer Reference: 360077 - Orange Town of NY, USA
Aerzen Reference: SQ-22-259014b

Submitted by: Nikita Assilamehoo
nikita.assilamehoo@aerzen.com

SCOPE OF SUPPLY

Membrane blowers with VFDs

2 Aerzen Generation 5 Blower Package - GM 50L DN 200 - Pressure - including:

Aerzen GM 50L Blower
Drive Motor - Teco: 60hp, 1800rpm, TEFC, 460V/60Hz

Base with integrated reactive type discharge silencer
Intake filter silencer
Hinged motor support as automatic belt tensioning device
Set of vibration isolation mounts
Narrow v-belt drive with guard - 1 set
Spring loaded relief valve
Discharge manifold with externally accessible integrated check valve
Flexible connector with clamps for schedule 40 pipe, discharge
Acoustic Enclosure - Indoor/Outdoor

Instruments
Pressure gauge c/w isolation ball valve (2x)
Dirty filter indicator (2x)

Optional Accessories
Inlet flexible sleeve - DN 200 (8")
Motor Protection - 1 Thermistor/Ph

Optional Instruments
Hood Space Heater (2x)

Optional Spare Parts
1 Year Maintenance Kit (1 x V-Belt Set, 1 x Intake Filter)
2 Year Maintenance Kit (1 x V-Belt Set, 1 x Oil Change (Delta Lube), 2 x Air Filter)

Connection Points:
Intake Connection: Local
Discharge Connection: DN 200 - 8"

Exclusions: See page 2

Aerzen Canada
980 rue Valois, Vaudreuil-Dorion, Québec J7V 8P2

Customer Reference: 360077 - Orange Town of NY, USA
Aerzen Reference: SQ-22-259014b

PERFORMANCE DATA

Aerzen Blower Package - GM 50L DN 200 - Pressure

Configuration: **G5**

		Capacity	Min F		
Conditions:	**Scfm**	**1488**	**263**	**1026**	**275**
Flow at inlet conditions	m³/min	44.09	7.8	50.55	50.55
	Icfm	**1557**	**275**	**1073**	**287**
Inlet pressure (abs.)	bar	1.012	1.012	1.012	1.012
	Psi	14.68	14.68	14.68	14.68
Pressure differential	mbar(g)	379	379	321	321
	Psig	**5.5**	**5.5**	**4.65**	**4.65**
Inlet temperature	°C	29.44	29.44	29.44	29.44
Discharge temperature	°C	65	80	61	71
Blower speed	RPM	3023	756	2145	756
Blower maximum speed	RPM	3800	3800	3800	3800
% of maximum blower speed		80%	20%	56%	20%
Power required at shaft (with accessories) **	kW	36.0	8.2	20.5	7.0
	HP	48.3	11.0	27.5	9.4
Total Power (Wire to Air):	HP	53.5	12.2	30.4	10.4
Motor rating	**HP**	**60.0**			
Motor speed	RPM	1775	444	1259	444
Motor frequency	Hz	60	15	43	15

Noise level without acoustic hood	dB(A)	97
Noise level with acoustic hood	dB(A)	70

Tolerances as per EN 10204, in accordance with standard ISO 1217:
Flow at inlet conditions / Power required at shaft +/- 5%

Blower package noise level:
Free field measurement at 1m from the complete blower package (tolerance +/- 2 dB(A))

Tests and measurements:
Blower stage: 1.5 hour flow test at the factory (Germany) on a calibrated test bed, at maximum operating conditions and according to DIN 1945. acceptance tolerance: +/- 5%.
A complete test report is available upon request.

On Site Commissioning
Available upon request, charges to be advised.
- Any commissioning activity is subject to two weeks prior notice and completion of commissioning checklist.
- Any on-site activity outside the time indicated will be billed according to the Aerzen Standard Rate Sheet

Exclusions
Control Panels, Motor Starters, Piping and Electrical Connections
* Unloading valves are required for reduced voltage starters

Warranty
Blowers including accessories are warranted for a period of 12mo / max 18mo after delivery and after provisional acceptance of the work against defects in workmanship and design. This warranty does not cover wearing parts unless such parts are defective during shipping / commissioning.
As per Aerzen standard warranty terms.

** Power at shaft excludes drive motor and belt drive

Aerzen Canada
980 rue Valois, Vaudreuil-Dorion, Québec J7V 8P2

Customer Reference: 360077 - Orange Town of NY, USA
Aerzen Reference: SQ-22-259014b

PRICING

	Unit Cost	Extended Cost	
Pressure Package - GM 50L DN 200	21,480.00 $	42,960.00 $	2 Units
OPTIONS			
Inlet flexible sleeve	$ 470.00	$ 940.00	2 Units
Motor Protection - 1 Thermistor/Ph	$ 590.00	$ 1,180.00	2 Units
Optional Instruments			
Hood Space Heater	$ 1,080.00	$ 2,160.00	2 Units
Optional Spare Parts			
1 Year Maintenance Kit	$ 520.00	$ 1,040.00	2 Units
2 Year Maintenance Kit	$ 910.00	$ 1,820.00	2 Units

TERMS AND CONDITIONS

INCOTERMS:	EXW - Aerzen Canada
Delivery:	Collect
Start-up Assistance / Operator Training:	As noted - page 2
Funds:	CAD
Payment terms:	120 days net Subject to credit approval and final destination of goods
Taxes:	G.S.T. extra, P.S.T. charged in Quebec only
Prices firm until:	7/10/2022
Packing:	Heavy duty wooden skid with polyethylene wrapping included * Skeleton Frame * Special packing can be quoted upon request.
Warranty:	30mo / max 36mo after delivery
Estimated Delivery:	20-24 Weeks

- to avoid warranty conflicts, we recommend that our start-up services be ordered and the inspection and operation procedures in our manual be respected.
- The goods remain the property of Aerzen Canada until full payment. Extended payment delays may void the warranty.
- Past due invoice amounts carry an interest charge calculated at 24% apr.
- Aerzen Canada reserves the right to change product specifications without prior notice.
- Aerzen can hold ready units free of charge for up to 3 weeks past agreed due date, after which storage fees will apply.

Aerzen Canada
980 rue Valois, Vaudreuil-Dorion, Québec J7V 8P2

Customer Reference: 360077 - Orange Town of NY, USA
Aerzen Reference: SQ-22-259014b

Submitted by: Nikita Assilamehoo
nikita.assilamehoo@aerzen.com

SCOPE OF SUPPLY

Membrane blowers without VFDs

3 Aerzen Generation 5 Blower Package - GM 50L DN 200 - Pressure - including:

Aerzen GM 50L Blower
Drive Motor - Teco: 60hp, 1800rpm, TEFC, 460V/60Hz

Base with integrated reactive type discharge silencer
Intake filter silencer
Hinged motor support as automatic belt tensioning device
Set of vibration isolation mounts
Narrow v-belt drive with guard - 1 set
Spring loaded relief valve
Discharge manifold with externally accessible integrated check valve
Flexible connector with clamps for schedule 40 pipe, discharge
Acoustic Enclosure - Indoor/Outdoor

Instruments
Pressure gauge c/w isolation ball valve (3x)
Dirty filter indicator (3x)

Optional Accessories
Inlet flexible sleeve - DN 200 (8")
Unloading Valve - G5
Motor Protection - 1 Thermistor/Ph

Optional Instruments
Hood Space Heater (2x)

Optional Spare Parts
1 Year Maintenance Kit (1 x V-Belt Set, 1 x Intake Filter)
2 Year Maintenance Kit (1 x V-Belt Set, 1 x Oil Change (Delta Lube), 2 x Air Filter)

Connection Points:
Intake Connection: Local
Discharge Connection: DN 200 - 8"

Exclusions: See page 2

Aerzen Canada
980 rue Valois, Vaudreuil-Dorion, Québec J7V 8P2

Customer Reference: 360077 - Orange Town of NY, USA
Aerzen Reference: SQ-22-259014b

PERFORMANCE DATA

Aerzen Blower Package - GM 50L DN 200 - Pressure

Configuration:	**G5**	**Capacity**	**Min F**	**Sheaved down to**	
Conditions:	**Scfm**	**1488**	**263**	**1368**	**1368**
Flow at inlet conditions	m³/min	44.09	7.8	40.52	40.52
	Icfm	**1557**	**275**	**1431**	**1431**
Inlet pressure (abs.)	bar	1.012	1.012	1.012	1.012
	Psi	14.68	14.68	14.68	14.68
Pressure differential	mbar(g)	379	379	379	321
	Psig	**5.5**	**5.5**	**5.5**	**4.65**
Inlet temperature	°C	29.44	29.44	29.44	29.44
Discharge temperature	°C	65	80	66	60
Blower speed	RPM	3023	756	2801	2779
Blower maximum speed	RPM	3800	3800	3800	3800
% of maximum blower speed		80%	20%	74%	73%
Power required at shaft (with accessories) **	kW	36.0	8.2	32.7	28.1
	HP	48.3	11.0	43.9	37.7
Total Power (Wire to Air):	HP	53.5	12.2	48.6	41.7
Motor rating	**HP**	**60.0**			
Motor speed	RPM	1775	444	1645	1632
Motor frequency	Hz	60	15	56	55

Noise level without acoustic hood	dB(A)	97
Noise level with acoustic hood	dB(A)	70

Tolerances as per EN 10204, in accordance with standard ISO 1217:
Flow at inlet conditions / Power required at shaft +/- 5%

Blower package noise level:
Free field measurement at 1m from the complete blower package (tolerance +/- 2 dB(A))

Tests and measurements:
Blower stage: 1.5 hour flow test at the factory (Germany) on a calibrated test bed, at maximum operating conditions and according to DIN 1945. acceptance tolerance: +/- 5%.
A complete test report is available upon request.

On Site Commissioning
Available upon request, charges to be advised.
- Any commissioning activity is subject to two weeks prior notice and completion of commissioning checklist.
- Any on-site activity outside the time indicated will be billed according to the Aerzen Standard Rate Sheet

Exclusions
Control Panels, Motor Starters, Piping and Electrical Connections
* Unloading valves are required for reduced voltage starters

Warranty
Blowers including accessories are warranted for a period of 12mo / max 18mo after delivery and after provisional acceptance of the work against defects in workmanship and design. This warranty does not cover wearing parts unless such parts are defective during shipping / commissioning.
As per Aerzen standard warranty terms.

** Power at shaft excludes drive motor and belt drive

Aerzen Canada
980 rue Valois, Vaudreuil-Dorion, Québec J7V 8P2

Customer Reference: 360077 - Orange Town of NY, USA
Aerzen Reference: SQ-22-259014b

PRICING

	Unit Cost	Extended Cost	
Pressure Package - GM 50L DN 200	21,480.00 $	64,440.00 $	3 Units
OPTIONS			
Inlet flexible sleeve	$ 470.00	$ 1,410.00	3 Units
Unloading Valve	$ 3,240.00	$ 9,720.00	3 Units
Motor Protection - 1 Thermistor/Ph	$ 590.00	$ 1,770.00	3 Units
Optional Instruments			
Hood Space Heater	$ 1,080.00	$ 3,240.00	3 Units
Optional Spare Parts			
1 Year Maintenance Kit	$ 520.00	$ 1,560.00	3 Units
2 Year Maintenance Kit	$ 910.00	$ 2,730.00	3 Units

TERMS AND CONDITIONS

INCOTERMS: EXW - Aerzen Canada
Delivery: Collect

Start-up Assistance / Operator Training: As noted - page 2

Funds: CAD
Payment terms: 120 days net
Subject to credit approval and final destination of goods

Taxes: G.S.T. extra, P.S.T. charged in Quebec only

Prices firm until: 7/10/2022

Packing: Heavy duty wooden skid with polyethylene wrapping included *
Skeleton Frame
* Special packing can be quoted upon request.

Warranty: 30mo / max 36mo after delivery

Estimated Delivery: 20-24 Weeks

- to avoid warranty conflicts, we recommend that our start-up services be ordered and the inspection and operation procedures in our manual be respected.
- The goods remain the property of Aerzen Canada until full payment. Extended payment delays may void the warranty.
- Past due invoice amounts carry an interest charge calculated at 24% apr.
- Aerzen Canada reserves the right to change product specifications without prior notice.
- Aerzen can hold ready units free of charge for up to 3 weeks past agreed due date, after which storage fees will apply.

Aerzen Canada
980 rue Valois, Vaudreuil-Dorion, Québec J7V 8P2

Customer Reference: 360077 - Orange Town of NY, USA
Aerzen Reference: SQ-22-259014b

Submitted by: Nikita Assilamehoo
nikita.assilamehoo@aerzen.com

SCOPE OF SUPPLY

Process blowers

3 Aerzen Generation 5 Blower Package - GM 90S DN 250 - Pressure - including:

Aerzen GM 90S Blower
Drive Motor - Teco: 125hp, 1800rpm, TEFC, 460V/60Hz

Base with integrated reactive type discharge silencer
Intake filter silencer
Hinged motor support as automatic belt tensioning device
Set of vibration isolation mounts
Narrow v-belt drive with guard - 1 set
Spring loaded relief valve
Discharge manifold with externally accessible integrated check valve
Flexible connector with clamps for schedule 40 pipe, discharge
Acoustic Enclosure - Indoor/Outdoor

Instruments
Pressure gauge c/w isolation ball valve (3x)
Dirty filter indicator (3x)

Optional Accessories
Inlet flexible sleeve - DN 250 (10")
Motor Protection - 1 Thermistor/Ph

Optional Instruments
Temperature switch c/w thermowell 120V (3x)
Pressure switch 120V (3x)
Hood Space Heater (2x)

Optional Spare Parts
1 Year Maintenance Kit (1 x V-Belt Set, 1 x Intake Filter)
2 Year Maintenance Kit (1 x V-Belt Set, 1 x Oil Change (Delta Lube), 2 x Air Filter)

Connection Points:
Intake Connection: Local
Discharge Connection: DN 250 - 10"

Exclusions: See page 2

Aerzen Canada
980 rue Valois, Vaudreuil-Dorion, Québec J7V 8P2

Customer Reference: 360077 - Orange Town of NY, USA
Aerzen Reference: SQ-22-259014b

PERFORMANCE DATA

Aerzen Blower Package - GM 90S DN 250 - Pressure

Configuration: **G5**

		Capacity	Min F		
Conditions:	**Scfm**	**1950**	**273**	**1950**	
Flow at inlet conditions	m³/min	57.76	8.09	57.76	
	Icfm	**2040**	**286**	**2040**	
Inlet pressure (abs.)	bar	1.012	1.012	1.012	
	Psi	14.68	14.68	14.68	
Pressure differential	mbar(g)	621	621	593	
	Psig	**9.0**	**9.0**	**8.6**	
Inlet temperature	°C	29.44	29.44	29.44	
Discharge temperature	°C	92	148	89	
Blower speed	RPM	1635	436	1630	
Blower maximum speed	RPM	2400	2400	2400	
% of maximum blower speed		68%	18%	68%	
Power required at shaft (with accessories) **	kW	74.5	19.9	71.1	
	HP	99.9	26.7	95.3	
Total Power (Wire to Air):	HP	110.6	29.5	105.6	
Motor rating	**HP**	**125.0**			
Motor speed	RPM	1780	475	1774	
Motor frequency	Hz	60	16	60	

Noise level without acoustic hood	dB(A)	101
Noise level with acoustic hood	dB(A)	79

Tolerances as per EN 10204, in accordance with standard ISO 1217:
Flow at inlet conditions / Power required at shaft +/- 5%

Blower package noise level:
Free field measurement at 1m from the complete blower package (tolerance +/- 2 dB(A))

Tests and measurements:
Blower stage: 1.5 hour flow test at the factory (Germany) on a calibrated test bed, at maximum operating conditions and according to DIN 1945. acceptance tolerance: +/- 5%.
A complete test report is available upon request.

On Site Commissioning
Available upon request, charges to be advised.
- Any commissioning activity is subject to two weeks prior notice and completion of commissioning checklist.
- Any on-site activity outside the time indicated will be billed according to the Aerzen Standard Rate Sheet

Exclusions
Control Panels, Motor Starters, Piping and Electrical Connections
* Unloading valves are required for reduced voltage starters

Warranty
Blowers including accessories are warranted for a period of 12mo / max 18mo after delivery and after provisional acceptance of the work against defects in workmanship and design. This warranty does not cover wearing parts unless such parts are defective during shipping / commissioning.
As per Aerzen standard warranty terms.

** Power at shaft excludes drive motor and belt drive

Aerzen Canada
980 rue Valois, Vaudreuil-Dorion, Québec J7V 8P2

Customer Reference: 360077 - Orange Town of NY, USA
Aerzen Reference: SQ-22-259014b

PRICING

	Unit Cost	Extended Cost	
Pressure Package - GM 90S DN 250	42,650.00 $	127,950.00 $	3 Units
OPTIONS			
Inlet flexible sleeve	$ 460.00	$ 1,380.00	3 Units
Motor Protection - 1 Thermistor/Ph	$ 740.00	$ 2,220.00	3 Units
Optional Instruments			
Temperature Switches	$ 470.00	$ 1,410.00	3 Units
Pressure Switches	$ 500.00	$ 1,500.00	3 Units
Hood Space Heater	1080	3240	3 Units
Optional Spare Parts			
1 Year Maintenance Kit	$ 1,280.00	$ 3,840.00	3 Units
2 Year Maintenance Kit	$ 2,190.00	$ 6,570.00	3 Units

TERMS AND CONDITIONS

INCOTERMS:	EXW - Aerzen Canada
Delivery:	Collect
Start-up Assistance / Operator Training:	As noted - page 2
Funds:	CAD
Payment terms:	120 days net Subject to credit approval and final destination of goods
Taxes:	G.S.T. extra, P.S.T. charged in Quebec only
Prices firm until:	7/10/2022
Packing:	Heavy duty wooden skid with polyethylene wrapping included * Skeleton Frame * Special packing can be quoted upon request.
Warranty:	30mo / max 36mo after delivery
Estimated Delivery:	20-24 Weeks

- to avoid warranty conflicts, we recommend that our start-up services be ordered and the inspection and operation procedures in our manual be respected.
- The goods remain the property of Aerzen Canada until full payment. Extended payment delays may void the warranty.
- Past due invoice amounts carry an interest charge calculated at 24% apr.
- Aerzen Canada reserves the right to change product specifications without prior notice.
- Aerzen can hold ready units free of charge for up to 3 weeks past agreed due date, after which storage fees will apply.

Attention:	**Fengshen Fan**
Company:	**Suez**
Phone No:	(905) 465-3030 (3170)
Fax No.:	(905) 465-3050
E-Mail:	*fengshen.fan@suez.com*
From:	**Landy Lu**
Company:	Sulzer Pumps (Canada) Inc
Address:	1401 Meyerside Drive, Unit #2 Mississauga, Ontario L5T 1G8
Phone No:	(905) 670-4677 Cell: (416) 881-1572
Fax No.:	(905) 670-3709
E-Mail:	landy.lu@sulzer.com

SULZER

QUOTATION	Page 1
Quote No:	**63358**
Revision:	2
Date:	July 11, 2022
Prepared By:	Chris Chong
FCA:	Mississauga - ON
Delivery:	26 -28 WEEKS
Submittals:	
Finals:	
Warranty:	Sulzer Standard
Terms:	Net 30 Days
Funds:	USD
Taxes:	Extra

Project: **Orange county of NY, USA**

ITEM	QTY	DESCRIPTION	UNIT NET	TOTAL NET
		*****Submersible Mixer - 34.5ft x 24ft x 18ft SWD ~ 0.8% MLSS*****		
	3	Sulzer Submersible Mixer,Model #RW6521-A60/12EC (Cast Iron,for Non Classified Area),6kW-571RPM,460/60/3,complete with 580mm propeller,double mechanical seals, bi-metal switches on stator plus Di seal probe,10m Cable. Accessories Included: *Mast Assy /w Floor/Inter/Upper Brkts,304SS (4"x4"SQ Guide Tube by Others) *Shock Absorber *Support Bracket,Shock Absorber,304SS *Power Cable Support Kit,20ft 304SS *Lifting Cable Assy,40ft 316SS *Relay,Heat Seal CA462,115V	$ 11,237.00	$ 33,711.00
	1	Spare Parts: Repair Kit /w Bearings and Mechanical Seals	$ 1,224.53	$ 1,224.53
		Additional Accessories (If Required)		
	1	Portable 24"-36" Adjustable Reach 60"H,1000LB Capacity /w Manual Handwinch	$ 2,307.00	$ 2,307.00
	3	Socket,Platform,304SS	$ 391.00	$ 1,173.00
		*****RAS Pump - Designed for Max 5729GPM @ 13ft TDH*****		
	1	Sulzer End Suction Centrifugal Pump Model #APT52-16 (O) /w Open Impeller,Cast Iron Volute/Stainless Steel Impeller,JC 5610 Cartridge Seal (SiC/SiC/EPDM,No Flush),Standard Baseplate,Severe duty 590RPM 40HP TEFC T 460/60/3 Foot-mounted,Inverter Duty Electric Motor	$ 44,773.67	$ 44,773.67
	1	Spare Parts: Mechanical Seal,Cartridge SiC/SiC	$ 4,342.77	$ 4,342.77
		*****Backpulse Pump - Duty Point 3355GPM @ 44ft TDH (22ft Static)*****		
	2	Sulzer Submersible Pump (Wet Pit),Model #XFP255J-CB2-PE430/6,43kW-1190RPM,460/60/3,complete with contrabock impeller,double mechanical seals,bi-metal switches plus Di seal probe,15m CSA Cable and DN250 Discharge. Accessories Included: *Guide Rail Assy /w Elbow and Upper Brkt DN250 (2"Dia Guide Pipe by Others) *Hardware Kit,SS *Lifting Chain 30ft Galv *Relay CA462 Heat/Seal 115V	$ 21,006.00	$42,012.00
	1	Spare Parts: Repair Kit /w Bearings and Mechanical Seals	$ 1,283.40	$1,283.40
		.....continued		
			TOTAL	

Attention:	**Fengshen Fan**
Company:	**Suez**
Phone No:	(905) 465-3030 (3170)
Fax No.:	(905) 465-3050
E-Mail:	*fengshen.fan@suez.com*
From:	**Landy Lu**
Company:	Sulzer Pumps (Canada) Inc
Address:	1401 Meyerside Drive, Unit #2 Mississauga, Ontario L5T 1G8
Phone No:	(905) 670-4677 Cell: (416) 881-1572
Fax No.:	(905) 670-3709
E-Mail:	landy.lu@sulzer.com

SULZER

QUOTATION	Page 2
Quote No:	**63358**
Revision:	2
Date:	July 11, 2022
Prepared By:	Chris Chong
FCA:	Mississauga - ON
Delivery:	26 -28 WEEKS
Submittals:	
Finals:	
Warranty:	Sulzer Standard
Terms:	Net 30 Days
Funds:	USD
Taxes:	Extra

Project: **Orange county of NY, USA**

ITEM	QTY	DESCRIPTION	UNIT NET	TOTAL NET

Project Size	Purchase Order amount	Discount offered by Supplier on Purchase Order Total amount
A	75 000 ≤ A€ < 150 000	Discount of 4%
B	150 000 ≤ B€ < 250 000	Discount of 5%
C	C€ ≥ 250 000 €	Discount of 6%

Notes:
‡.Thermal and seal leak protection are to be connected and operable for warranty coverage, where applicable
‡.Sulzer cannot release equipment to production until complete technical and contract approval have been achieved; please keep this in mind in regards to your project planning timeline
‡.Taxes and Shipping not Included
‡.Offer valid for 30 days, subject to prior sale
‡.Prices limited to only the items and quantities listed, please verify all items and quantities to assure completeness. Additional items will be priced accordingly.
‡.The price quoted is for all items purchased at one time.
‡.Delivery times indicated are based on our current factory loading and subject to change at the time of order
‡.Sulzer offers this quote subject to the attached General Terms and Conditions of Supply Sulzer Pumps Canada, August 24th, 2016
‡.Sulzer offers this quote Subject to the 2020 SUPPLY FRAMEWORK AGREEMENT
‡.All guide pipes (2" Dia) and tubes (4"x4"SQ), controls, anchor bolts as required by others

TOTAL	

SSI PROPOSAL

SSI Aeration Inc.



Aeration Performance Through Innovation



Fine Bubble Diffusers
Disc Type



Fine Bubble Diffusers
Tube Type



Coarse Bubble Diffusers
Reliability Built In

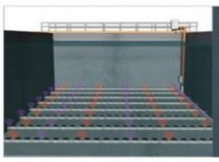

Telemetry Systems
Real Time Camera Monitoring



Advanced Membrane Materials
PTFE

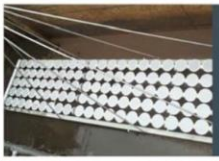

Retrievable Systems
Easy to Maintain



Complete Aeration Systems
Designed for You



OEM Replacement Membranes
Retrofit Existing Systems

SSI Aeration Inc.
4 Tucker Drive, Poughkeepsie,
NY 12603, United States America
Tel. +1 845-454-8171
Fax: +1 845-454-8094
Email: info@ssiaeration.com
www.ssiaeration.com

August 19, 2022.

File: RFP052822,NY (Suez)_P-060122[B]

SUEZ WATER TECHNOLOGIES

Attention: Fan, Fengshen (WTS)
E-Mail: fengshen.fan@suez.com
Phone: 905 469 7792

Ref: RFP052822, NY- **Proposal**
Revision 'A' with Tank Dimensionsin lieu of email 07-06-2022
Revision 'B' updated with Tank Dimensions and AOR Loadings per email of email 08/19/2022

Sir/Madam,

In response to your email and based on the information, SSI as an ISO-9001 certified corporation is pleased to submit this proposal for the design, manufacture & supply of Aeration Equipment for **Three (3) Aerobic Tanks** with AFD270-E Fine Bubble Disc Diffusers with EPDM Membranes.

Unless otherwise noted equipment supplied will meet or exceed any engineer specified performance requirements and/or called in the RFP/Email.

Design calculations & Preliminary Drawings showing the general arrangement of diffuser/Piping layouts are included (Refer item I& II).

A. Scope of supply is complete with all components from the downstream of air supply line connection (±6" above water level)starting with SS Vanstone and loose follower flange including drop pipe*(Isolation valve and associated accessories are not included in SSI supply limit)*

B. Each Tank is 106' (L) X 24' (W) X 17.5' (SWD) and Aeration Equipment Supply *per Tank* is listed below:

Ø10" 304SS Drop pipe ±15'		Ø10" PVC Lower Drop +Manifold ±25'		Ø4" PVC Headers ±940' c/w factory drilled holes for mounting saddles and diffusers at site		**AFD270-E diffusers** c/w 4" QTS
304SS Supports	304SS Couplings	304SS Supports	PVC Couplings	304SS Supports	PVC Couplings	
2	1	5	1	180	54	**864**

COMMON FOR ALL TANKS

Total number of AFD270-E Diffuser for Three (3) Aerobic Tanks=(864/Tank)* 3 = **2,592Pcs**

C. Spares:

- AFD270-E Diffuser Assemblies–**8**
- AFD270-E Diffuser Membranes-**20**
- Ø4" 304SS Supports - **5**
- Ø4" Repair Couplings–**2**
- Special Tools Set – **1**

D. F.O.B: Orange Town of NY, USA, 10962(subject to change at actuals)

E. Manufacturer's Site Services: Two (2) days / One (1) trip

(For installation inspection, startup assistance and O& M Training)

F. TOTAL LUMP SUM PRICE (for all listed above) ……**$88,000.00**

G. GENERAL:

- SS pipe work is cleaned, degreased and acid washedfor following the fabrication.
- Piping sections are supplied in 20' lengths maximum and connected at site with SS flanges (Factory welded) shipped along with piping.
- AIS is exempt for the above Aeration equipment.
- All SS welding/PVC Gluing is done in the factory and **NO** site welding/gluing involved in the installation of equipment.
- Each Grid is supplied with Moisture Purge System.
- All Supports are supplied with anchors and accessories.
- **Spares:** Included as above.
- **Site Services:** Included as above.
- SSI diffusers are manufactured under ISO9001.
- **Warranty:** Unless otherwise noted SSI's standard warranty/guarantee on the equipment supplied is for 18 months from the date of shipment or 12 months after the start up whichever occurs first. Warranty covers the workmanship and material of the listed items only. Any costs direct or indirect for transportation, site work, site repair/adjustments etc., are not covered under warranty. Further warranty is valid only when SSI or Its Representative/Associates approve/certify the installation. However, as the inspection is done randomly certification on installation does not make SSI liable or responsible for any direct or indirect installation failure(s).

H. PRICE IS:

1. In **USD**.
2. Valid for **15** days.
3. Above price does not consider Buy America products and if it is needed, price might change accordingly.

4. **Approval Submittal**: in electronic/digital files of all drawing and relevant technical information/data sheets and product cut sheets along with calculation if applicable **2-3 weeks** after receipt of P.O and all the information necessary to prepare submittals and O & Manual included in submittals.
5. Completion and ready to ship**: 14-18 Weeks** after receipt of approved submittal.
6. **F.O.B:** Orange Town of NY, USA, 10962 (subject to change at actuals)
7. Manufacturer's Service days included as above.
8. Unless noted otherwise specified all components/ items are shipped lose for field assembly if any. Field assembly, installation, site work and field testing by others.
9. Exclusions: *(unless noted otherwise)*
    - Offloading upon delivery to site.
    - Any items and services not itemized within the above scope of supply.
    - Blowers, Mixers, wall sleeves, isolated valves, air main piping.
    - Applicable taxes, custom duties, brokerage etc.,
10. Payment Terms:
    - For Municipal and Government Projects in USA: 30% with PO,30% with approved submittals and balance 40% prior to shipment.
    - Private projects in US and all overseas jobs: 30% with PO,30% with approved submittals and balance 40% prior to shipment (Subject to credit approval).
11. Cost Escalation Clause: SSI Aeration, Inc. has priced the job according to existing market conditions and costs at the time of quote. Due to wide fluctuations and increases in the price of stainless steel, carbon steel, PVC components we are experiencing in very short time frames, the sales price of the equipment might be subject to escalation in price in the event there are delays approving submittal, delays in delivery schedule and/or release to manufacture beyond what was quoted and beyond Seller's control. If there is a significant increase of material or freight occurring during the performance of the contract, the contract sums and/or time of completion shall be equitably adjusted by Change order. A change in price will be considered significant when the overall cost of the system increases by 10% or higher.
12. Escalation shall be based upon the increase in the Producer Price Index, U.S Department of Labour, Bureau of Labour Statistics-Group: Machinery and Equipment: Special Industry Machinery and Equipment, Series Id-WPU116 9the "Index"). The escalation shall be calculated based upon the percentage increase of the monthly index between the date of quotation and the date of receipt of order and submittal approval/release to manufacture (i.e.: the index of the month of when the order is received and released to manufacture minus the index for the month of quotation divided by the index for the month of quotation, multiplied by the quoted price). Note there is approximately 2–4-month delay in the publishing and finalizing of these indexes by the U.S Federal Government. Therefore, the escalation will be calculated at the time the index for both months has been published and finalized.

If you have any questions or if we can be of further assistance, please contact us.

Yours truly,
Stamford Scientific International Inc.

Kiran Kumar Banala,
Director of Application Engineering,
Tel: +1 845-454-8171 ext. 308
Fax: +1 845-454-8094
kiran@ssiaeration.com

I. Design calculations:

SSI Aeration Inc.
4 Tucker Drive
Poughkeepsie, N.Y. 12603
United States America.
Tel. +1 845-454-8171
Fax: +1 845-454-8094
Email: info@ssiaeration.com
www.ssiaeration.com

DIFFUSED AERATION SYSTEM

Doc #	**SD00010442**	Revision #	**3**
Project	**RFP052822**	Date	**8-19-2022**
Process Type	**AST**	Units	**Imperial**

Aerobic Tank design for 3 tank(s)			
Tank Type	**Aeration**	Tank Shape	**Rectangular**
Type of Input	**AOR**	Diffuser Type	**AFD270-1mm**

	Units	**condition**
Design Scenario		**Standard**
AOR	(Lbs/day)	15,000
AOR	(lbs O_2/hr)	625
Site Elevation	(ft)	25
Aerobic Tank Length per tank	(ft)	106
Aerobic Tank Width per tank	(ft)	24
Diffuser Water Depth	(ft)	16.5
SOR	**(lbs O_2/hr)**	**1,679.39**
Total Airflow	**(SCFM)**	**4,488**
Airflow Per Diffuser	**(SCFM)**	**1.73**
Diffuser Quantity	**(pcs)**	**2,592**
Diffuser Density	**(%)**	**13.92**
SOTE	**(%/ft)**	**2.17**
Total SOTE	**(%)**	**35.84**
Blower Pressure	(PSIG)	8.44
Pressure @ Top Of Dropleg	(PSIG)	7.87

Aerobic Tank design for 3 tank(s)		
	Units	**condition**
AOR	(Lbs/day)	15,000
AOR	(lbs O_2/hr)	625
MLSS	(mg/l)	8,500
Aeration Time	(hrs)	24
Liquid Temperature	(°C)	25
Ambient Air Temperature	(°C)	29.44
Site Elevation	(ft)	25
Barometric Pressure	(PSIG)	14.68
O_2 Uptake Rate	(mg/l/hr)	75.01
Minimum Diffuser Density	(%)	5
Alpha Factor	(α)	0.49
Fouling Factor	(F)	1
Beta Factor	(ß)	0.95
Theta Factor	(θ)	1.024
Dissolved Oxygen	(mg/l)	2
Aerobic Tank Length per tank	(ft)	106
Aerobic Tank Width per tank	(ft)	24
Side Water Depth	(ft)	17.5
Diffuser Water Depth	(ft)	16.5
Total Area of 3 tank(s).	(ft^2)	7,632
Tank Volume	(ft^3)	133,560
Tank Volume	(Million Gallons)	1
C *, Surface Saturation, Std., Meth	(mg/l)	8.26
Csw, Site Basin Saturation	(mg/l)	9.66
Css, Std., Basin Saturation	(mg/l)	10.64
SOR	(lbs O_2/hr)	1,679.39
SOR	(lbs O_2/day)	40,305.42
KLa20 - /hr		18.92
Required Mixing Energy	($SCFM/ft^2$)	0.12
Airflow For Minimum Mixing	(SCFM)	915.84
Minimum Diffuser Quantity	(pcs)	931
SP O_2Transfer Rate	gr O_2/Nm^3-m	21.4
SAE	(lbs O_2/hp-h)	8.19
Blower Efficiency	(%)	70

Blower Power	(hp)	205.03
Estimated cost per kWh	(kWh)	0.11
Annual Operating Cost	(USD)	147,328.04

SSI 9” Disc Diffuser Systems

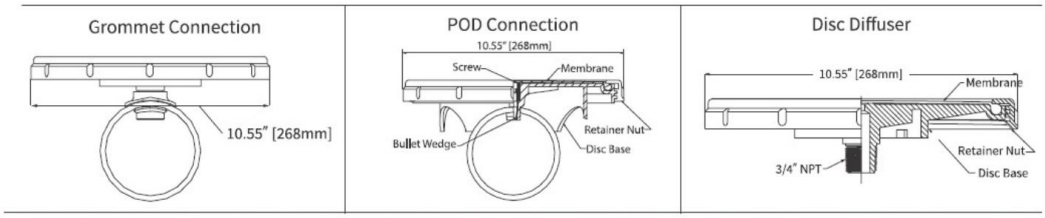



Limitation of Liability: The information contained in this Design is provided as a service exclusively to SSI clients and is intended to use with SSI products for Proposal/Quotation purpose only to be stamped or embossed with the SSI corporate seal for validation/approval. We accept no liability for the accuracy of self-generated designs.

Notes:

-

Thank you very much for your enquiry. This is a computer generated design.

II. Preliminary Drawings:

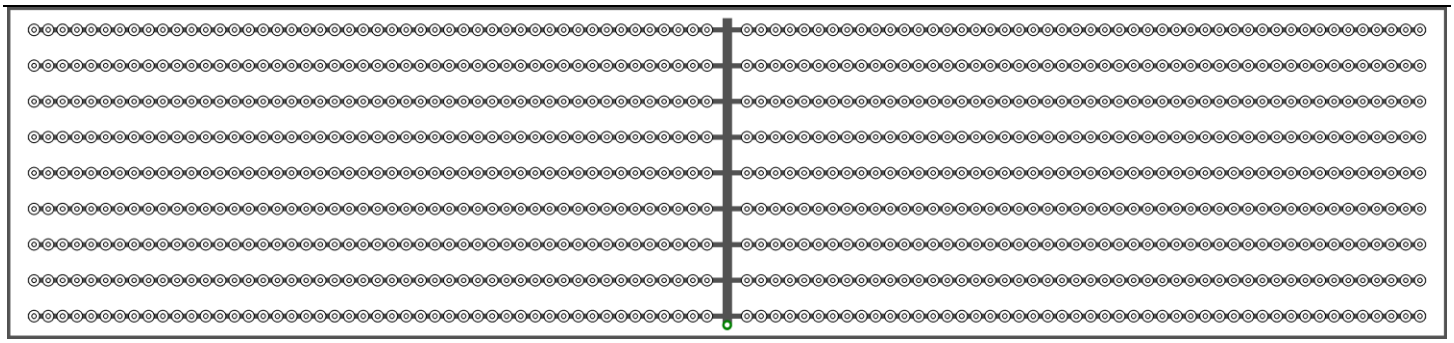

Note: This schematic layout is for conceptual purpose not for construction.

Aerobic Tank - 106' (L) X 24' (W) X 17'-6" (SWD)
ONE (1) SHOWN THREE (3) REQUIRED

Grid Details
18-HEADERS PER GRID @ 2'-7.68" C-C
48-DIFFUSERS PER HEADER @ 1'-0.71" C-C
864-DIFFUSERS PER GRID

SSI – SSI Aeration, Inc.
Standard Terms and Conditions of Sale

1. **General:** All products and services offered for sale by Stamford Scientific International, Inc. (hereinafter "Seller") or its subsidiaries or through its distributors or sales representatives are sold subject to the terms and conditions stated herein. This offer expressly limits acceptance to the terms hereof and any additional, different or inconsistent terms proposed by Buyer, whether in writing or otherwise, are hereby objected to and rejected and Seller shall not be bound thereby unless expressly agreed in a writing signed by an officer of the Seller that such terms and conditions shall supersede those contained herein.

2. **Estimates and Quotations**: All prices are subject to adjustment on account of specifications, quantities, shipment arrangements or other terms and conditions, which are not part of the original price quotation. Written estimates issued by the Seller will be valid for 30 days only. Products are sold at prices in effect at the time the order is taken. The company reserves the right to change prices without notice when necessary.

3. **Terms and Method of Payment**: For Buyers with established credit, payment of accounts due must be made within 30 days of shipment FOB Seller facility or 30 days after the goods are ready to ship and Buyer is notified of same. Seller may make partial billings of the contract price or invoice as various components of the equipment are shipped. Partial payments are expected to be made according to partial goods shipped. Custom built and special large orders shall require deposits in advance of production together with progress payments. For Buyers without credit, payment will be by company check, bank draft, Visa or Mastercard, telegraphic transfer or irrevocable letter of credit at time of order or progress payments according to quote offer. The Buyer shall not be entitled to withhold payment of any sums due to the Seller by reason of any disputed claim by the customer relating to any goods or deliveries. If Buyer fails to make payment by the due dates then without prejudice to any other rights of the Seller: The Seller shall be entitled to suspend all or any other deliveries to be made under that or any other contract with the Buyer and in such event the Buyer shall not in any respect be released from its obligations to the Seller under that or any such other contract. The Seller shall also be entitled to treat the relevant contract or any other contract with the Buyer as having been terminated by the Buyer and to claim damages for breach of contract accordingly.

4. **Taxes**: Product prices do not include taxes. The amount of any present or future sales, use, excise, value-added or similar tax if applicable to the sale shall be paid by the Buyer unless a tax exemption certificate acceptable to the tax authorities is approved. If Seller is required to pay any such tax, fee or charge, Buyer shall reimburse Seller therefore.

5. **Delays in Delivery and Force Majeure**: All quoted delivery dates are approximate. The Seller will make commercially reasonable efforts to meet any delivery date(s) quoted in the agreement. However, under no circumstances shall the Seller be liable to Buyer for any delay in shipment or failure to meet any quoted delivery date(s) due to unforeseen circumstances or due to a cause beyond its control. Examples of such causes are acts of God, wars, riots, embargoes, acts of civil or military authorities, fires, floods, accidents, strikes, transportation delays, inability to obtain materials or supplies, interruption for any reason in the manufacture of products by Seller's supplies or other causes not within Seller's control.

6. **Warranty/Repairs**: Products manufactured by Seller are warranted to be free from defects in materials or workmanship for 18 months from date of shipment or 12 months from the date of start up, whichever comes first. Parts found to be defective in materials or workmanship will be repaired or replaced without charge, F.O.B. original point of shipment. The forgoing warranty is in lieu of and excludes all other warranties expressed or implied (including any warranty of merchantability or fitness or purpose). The responsibility of the Seller is limited to the cost of the defective part. Wear caused by faulty maintenance or operation shall not constitute defects. Elastomeric components damaged as a result of maintenance activities, excessive airflow, foreign debris in the process solution, or excessive exposure to direct ultraviolet and thermal radiation shall be excluded. Decomposition by chemical action and chemical precipitate shall not constitute defects. Claims for defective, damaged or improper material or for shortages will not be allowed unless written notice specifying the nature and extent of the defect, damage or shortage is received in the Seller's office within fourteen (14) days from delivery. Seller assumes no responsibility of expense for repairs made on equipment sold by it to Buyer when such repairs are done outside Seller's factory facilities without its written consent. In all cases, a Start-Up certificate issued by SSI is for general conformance to the Manufacturer's installation instructions only after audit for work performed. However, in no cases, SSI can audit 100% of all work performed by others and cannot guarantee their work to fully meet our installation instructions. Warranty for installation labor and services provided by others shall be covered by the warranty of the entity performing those services. Failure by the Installer to fully meet our installation instructions and requirements may result in installation errors which may lead to equipment failure, for which Seller shall not be liable.

7. **Cancellation and Returns Policy**: (A) Cancellations: Any request for order cancellation, rescheduling or modification by Buyer must be made in writing and such action must be approved in writing by an officer of Seller. Such request should be made to Seller at least four (4) weeks from scheduled shipment date in order to be considered. Such cancellation, rescheduling or modification shall be subject to the payment of reasonable cancellation charges, which shall include but not be limited to expenses already incurred for labor and material costs, commitments made by Seller and a reasonable profit. (B) Returns: Any request for product return by Buyer must be made in writing. Returns of products will not be accepted for any reason without prior written consent of Seller and issuance of a Return Material Authorization (RMA) number. Return of products must be shipped freight prepaid by Buyer. Seller will not accept freight charges. Returns may be subject to a 15% restocking fee and any other reasonable charges. Returns made without obtaining prior authorization shall be returned to sender at Buyer's expense. Custom made goods may not be returned under any circumstance.

8. **Limitation of Liability: Notwithstanding anything else to the contrary, Seller shall have no liability for consequential, incidental, punitive, indirect and/or special damages regarding the sale or use of a product even if the potential for such damages has been disclosed to Seller. Seller's total liability for product defect claims shall not exceed the purchase price paid for the product.**

9. **Complete Agreement**: These Terms and Conditions of Sale when combined with Seller's invoice represent the entire agreement between the parties with respect to the subject matter hereof. Language contained in any digital or written instrument from Buyer to Seller serving to modify the terms of any of the foregoing shall be of no effect.

10. **Severability**: If any provision of these Terms and Conditions of Sale shall be deemed illegal or unenforceable, such illegality or unenforceability shall not affect the validity and enforceability of any other provisions hereof, which together shall be construed as if such illegal and unenforceable provision or provisions had not been included herein.

11. **No Waiver**: The failure by Seller to enforce at any time any of the provisions of this agreement, or to exercise any election or option provided herein, shall not be a waiver and shall in no way be construed as a waiver of such provisions or options, nor in any way be construed to affect the validity of this agreement or any part thereof, or the right of Seller thereafter to enforce each and every such provision.

12. **No Indemnification**: Unless otherwise expressly provided in writing by both parties, Seller does not indemnify, nor does it hold Buyer harmless, against any liability, losses, damages and expenses (including attorney's fees) relating to any claim whatsoever, including without limitation, claims for personal injuries, death or property damage related to the products sold hereunder.

13. **Governing Law**; Limitations: The relationship between Buyer and Seller in relation to the products shall be governed by and construed in accordance with the laws of the State of New York, U.S.A. Any legal action with respect to any transaction must be commenced within one year after the cause of action has arisen.

14. **Dispute Resolution**: Actions by Seller for nonpayment by Buyer of the purchase price of products sold by Seller, or for redress of other breaches by Buyer of these Terms and Conditions of Sale, may be brought by Seller, at its option, before any court of competent jurisdiction in the State of New York. At Seller's option, disputes between Buyer and Seller, including all claims for non-performance by Seller, shall be finally settled by arbitration in Poughkeepsie, New York USA.

15. **Foreign Corrupt Practices Act**: Buyer represents and warrants to Seller that it shall comply with all laws in relation to its sale and/or use of the Products and will not pay anything of value to any government employee in connection with the sale of the Products.

16. **Precedence**: In the event of any inconsistency among the referenced documents, attachments, drawings, specifications or other provisions hereof, the following order of precedence shall apply: (1) special terms and conditions agreed to in writing by an Officer of the Seller, (2) these standard terms and conditions of sale, (3) specifications, (4) all other attachments or documents incorporated herein by reference.

SSI Aeration
SMART IDEAS FOR WATER

What Makes the a
SSI 9” AFD270 Disc Diffuser Systems
Worldwide Choice?

The SSI 9” Disc Diffuser System combines engineering excellence, superior component quality, and a technically advanced product design. Proven highly durable and efficient in thousands of municipal and industrial installations around the world, this advanced system has reliability built into every stage of performance. SSI’s AFD270 comes in several membrane materials including our patented PTFE membrane, designed to use less energy and require minimal maintenance. Industry standand size and shape are interchangable with other manufacturers. The diffuser base is molded with virgin polypropeline for extended performance, and is highly efficient with airflow performance of 1.5-2.5 SCFM.

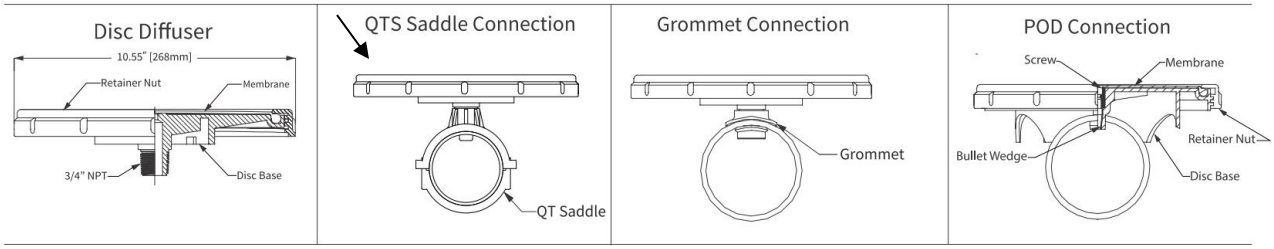



SSI Aeration
An ISO 9001:2015 Certified Company

4 Tucker Drive
Poughkeepsie, New York 12603 USA
www.stamfordscientific.com
email: info@stamfordscientific.com
tel: +1 (845) 454-8171
fax: +1 (845) 454-8094

AFD270 Disc Diffuser

Unique System Strengths

Complete product line – creating the system that fits your needs

SSI manufactures disc diffusers and coarse bubble diffusers, and we mount these products on a wide range of piping materials including PVC, CPVC, PP and Stainless Steel. We have the ability to attach diffusers to pipe using saddles, grommets, or pre-assembled PODS. We can provide retrievable systems or fixed grids, and systems in kit form or mostly factory assembled. We try to understand and anticipate your needs, and fit our recommendations to your situation.

Piping system integrity – thicker wall pipe and double anchors for fewer breakages

Our piping is 38% thicker and has double rod support stands as standard – two anchors for each support location means twice the resistance to hydraulic and thermal loads. Most often supports fail due to temperature and water velocity. SSI locates two anchors where support is needed most, helping to increase product longevity.

Comprehensive design service and after sales support

SSI provides full design services, including biological and mixing calculations, process simulations and hydraulic studies. We maintain a full drafting department with 3D and animation capabilities and we can assist with specifications and CAD drawings. Our service and installation crew can hold your hand during the early stages of the project and our worldwide multilingual staff is dedicated to your complete satisfaction.

Intelligent Upgrade Options

Patented PTFE membranes prolong efficiency and reduce whole-life costs

SSI's patented PTFE membrane barrier properties not only reduce plasticizer extraction, shrinking, and membrane hardening but also limit dynamic changes that can result from swell, such as creep. Compared with uncoated products that are more susceptible to increases in DWP due to more aggressive fouling and changes in physical properties and weight, the PTFE coated membrane improves consistency of DWP (Headloss) values over the product life. This directly impacts long-term power costs and the ability of the system to distribute air uniformly across the tank floor.

Diffuser Parts	Material
1. Retainer nut	PP
2. Membrane	EPDM / PTFE / PEEK / Silicone
3. Diffuser Base	PP

Max. Temperature resistance - 212° F / 100° C

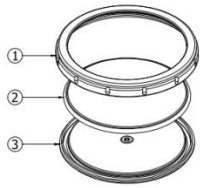

Pods Connection

Factory assembled diffusers mounted on laterals save contractors up to 30% on assembly time. PODS are a viable solution if you want to tank down for a minimum period, if your labor costs are high, or if you have a field labor shortage. For engineers unsure about the skill set of a contractor's field labor, SSI PODS are worry free with fewer field connections, and most connections created in controlled factory settings by trained personnel and automatic machines.

Grommet Connection

Simple to install on site, compact to ship and move. Affordably priced and time tested over 15 years worldwide.

Quick Threaded Saddle

QTS saddles quickly and easily bolt onto the pipe and allow installation of the diffuser with a few simple turns.

Avg Operating Condition per Diffuser	Peak Air Flow per Diffuser	Orifice Size	Slit Qty	Active Surface Area per Diffuser	Weight per Diffuser AFD270
0.45 - 2.5 SCFM 0.8 - 4.5 Sm^3/hr	4.0 SCFM 7.0 Sm^3/hr	1/4" 6mm	+/- 6600	0.41 ft^2 0.038 m^2	1.5 lbs 0.68 kg

Operating diffusers distant to average operating conditions range might leads to poor uniform distribution and subjected to rapid fouling.

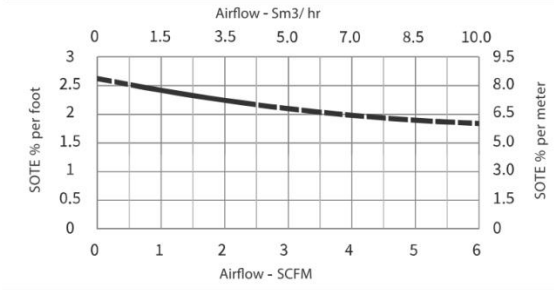

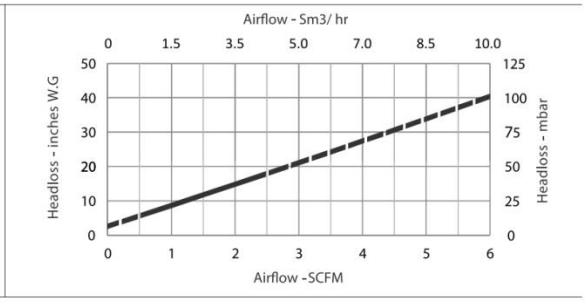

Above curves are generated based on ideal condition. Actual curves for specified project/condition to be provided upon request.

SSI
www.ssiaeration.com

ANAB ACCREDITED Certified to ISO 9001:2015 TÜVRheinland Precisely Right.

SSI Aeration Inc. 4 Tucker Drive, Poughkeepsie, NY 12603 United States America.
Tel. +1 845-454-8171 Fax: +1 845-454-8094, Email: info@ssiaeration.com

TECHNICAL DATA SHEET

SSI™ ACCESSORIES

NPT SADDLES

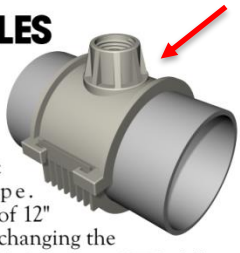

Quick Connect NPT Saddles mount on nominal US 4" or metric 114.3mm OD pipe. They allow retrofit of 12" to 9" discs without changing the piping system. Quick Connect NPT Saddles are made of polypropylene, and install into a 5/8" (16mm) hole.

GROMMETS



Grommets are available for round plastic or square stainless steel pipes in US or Metric dimensions. Installation is simple. Multiple sizes are available based on pipe wall thickness. Grommets install into a 1-1/4" (32mm) chamfered hole.

EXPANSION JOIN OPTIONS



Rigid Bolted SS

Expansion Joints are available in three types: Flexible PVC with SS Shell, Rigid Bolted SS, and Anti-rotation, Telescoping PVC. The flexible expansion joints are recommended for disc installations and the positive locking type for tube diffuser projects.



Flexible PVC w/SS shell

Slotted band joints with stainless steel shear rings are suitable for disc-type fine bubble and cap-type coarse bubble lateral plastic piping systems, in conjunction with SSI's fixed and guide support stand system to manage thermal expansion and contraction.

Positive locking bolted stainless steel couplings are suitable for drop pipes, stainless joints, and for all tube diffuser piping systems to restrict header pipe rotation.

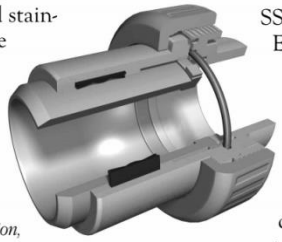

Anti-rotation, Telescoping PVC

SSI's Sliding Expansion Joint is an anti-rotational telescopic union which absorbs pipe expansion and contraction to up to 1.5" (38mm).

CHECK VALVES

SSI fine and coarse bubble diffusers are available with optional check valves. These are not required for proper operation since most diffusers are self-checking, but they may give peace of mind to the designer or operator.

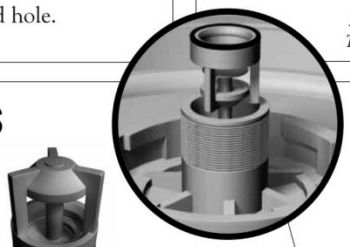



Disc showing check valve installation



Coarse Band (WBCB) check valves



Snappy Saddle check valves

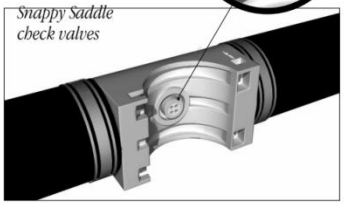



Tube Diffuser check valves

Please see reverse for additional technical data

SSI Aeration
SMART IDEAS FOR WATER

SSI AERATION, INC.

+1-845-454-8171 TEL
+1-845-454-8094 FAX

4 TUCKER DRIVE
POUGHKEEPSIE, NEW YORK 12603 USA
www.ssiaeration.com
EMAIL: info@ssiaeration.com

TECHNICAL DATA SHEET

SSI™ ACCESSORIES *continued*

MOISTURE PURGE SYSTEM

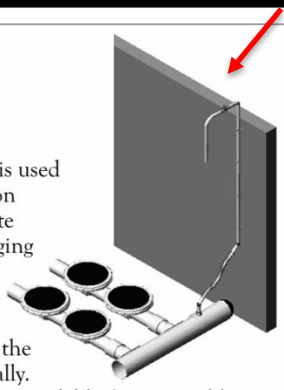

An airlift type purge system is used in all SSI fine bubble aeration systems to remove condensate from the piping system. Purging entrained water helps ensure even air distribution to all diffusers in a grid. A ball valve is supplied with the system and is opened manually. Continuous purge systems are available for retrievable-type aeration systems, or where it is not possible to fasten a purge line to a tank wall.

PRESSURE MONITORING SYSTEM

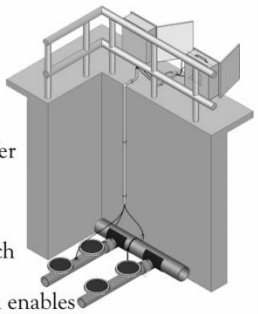

Throughout the life of an aeration system, oxygen transfer efficiency may decline somewhat when diffusers become fouled, but headloss can increase dramatically which in turn increases energy costs. A pressure monitoring system enables the operator to better determine the optimal cleaning frequency of the membranes. The fouling rate can vary by aeration zone, hence it is recommended to install at least one system in each zone.

SUPPORT STANDS

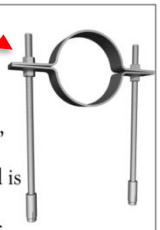

Support Stands are available in 304SS, 316SS or in ABS plastic. SSI's standard is 304SS with drop-in anchor bolts. In our aeration piping systems, support stands fulfill the dual role of anchoring pipes to the floor and controlling thermal expansion and contraction. Special support stands for uneven tank floors, for installing into concrete ballast forms, and for tanks with significant channel velocity (with lateral supports) are also available. ABS support stands are primarily used with disc diffusers and plastic pipe, where a low capital cost is the primary objective.

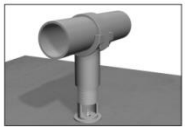

ABS plastic support stand

TELEMETRY SYSTEM

Adding a Telemetry System to your aeration system will allow you to remotely monitor factors inside your tank from any PC, tablet or mobile device. Telemetry can be installed in new systems or retrofitted through an end cap into existing systems. Telemetry sensors are available to monitor variables in your system such as temperature, vibration, humidity, water detection, DO, and other environmental factors.

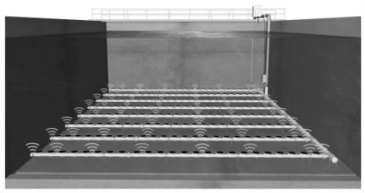

ACID DOSING SYSTEM

In-situ Acid Dosing Systems are available to control calcareous deposits in the perforations which will reduce membrane backpressure.

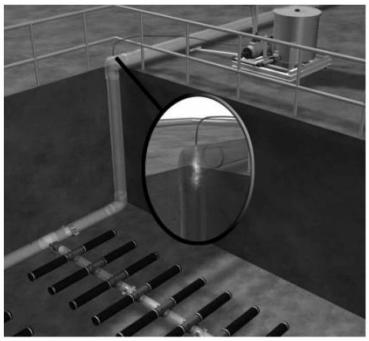

SSI Aeration
SMART IDEAS FOR WATER

SSI AERATION, INC.

+1-845-454-8171 TEL
+1-845-454-8094 FAX

4 TUCKER DRIVE
POUGHKEEPSIE, NEW YORK 12603 USA
www.ssiaeration.com
EMAIL: info@ssiaeration.com

Quote

Q2200903 Ver. 00

FLOVAL EQUIPMENT LTD.
1 - 250 RAYETTE RD, CONCORD ON L4K 2G6
TEL 905-669-4500 or 800-387-3784 FAX 905-669-4905
www.floval.com sales@floval.com

To:

SUEZ WATER TECHNOLOGIES

Attn: James Zhao

jun.zhao@suez.com

Date:	30-May-22
Reference:	360077 - V-Port Control Valves
FOB	Concord, Ont
Validity	30 Days
Delivery	TBA
Freight	Allowed
Terms:	SUEZ - **NO HOLDBACKS**
Make Order To:	Floval Equipment Ltd.
Prepared By:	Alex Popov
Currency:	CAD

We are pleased to quote the following

#	Qty	Description	Unit Price	Amount
		OPTION 1:		
1	4.00	DeZURIK 14" V-Port Ball Valve - 317 SS body Size - 14 Inch (350mm) End Connection - Class 150; Flanged Drilling; ISA 75.08.02 and IEC 534-3-2F-F Body Material - 317 Stainless Steel Packing - PTFE Chevron; Temperature to 500 Degree F. (260 Degree C.) Ball Material - 317 SST; Heat Treated; Electroless Nickel Overlay to 700 Degree F. Shaft - 2205 Duplex Stainless Steel Seat Type - Rigid 317 Stainless Steel; Heat Treated; Electroless Nickel Overlay; Temperature to 450 Degree F. Bushing - 317 SST Wire Mesh Encapsulated in PTFE Liner to 500 Degree F. Blue DeZURIK Epoxy (NSF Std. 61) on Exterior Actuator Type - PowerRac Cylinder; 8 In Dia	26,904.00	107,616.00
		OPTION 2:		
2	4.00	DeZURIK 14" V-Port Ball Valve - CS body Size - 14 Inch (350mm) End Connection - Class 150; Flanged Drilling; ISA 75.08.02 and IEC 534-3-2F-F Body Material - Carbon Steel Packing - PTFE Chevron; Temperature to 500 Degree F. (260 Degree C.) Ball Material - 317 SST; Heat Treated; Electroless Nickel Overlay to 700 Degree F. Shaft - 2205 Duplex Stainless Steel Seat Type - Rigid 317 Stainless Steel; Heat Treated; Electroless Nickel Overlay; Temperature to 450 Degree F. Bushing - 317 SST Wire Mesh Encapsulated in PTFE Liner to 500 Degree F. Blue DeZURIK Epoxy (NSF Std. 61) on Exterior Actuator Type - PowerRac Cylinder; 8 In Dia	19,455.00	77,820.00
3	1.00	FERIGHT Freight Costs to Ontario Location	Included	
4	1.00	SURCHARGE DeZURIK Surcharge (3.5%)	Included	

It is agreed that any order resulting from this proposal shall be in accordance with Floval Equipment Ltd's Standard Terms & Conditions
Liquidated damages and/or retention are not allowed.
Pricing subject to verification at time of order.
Errors & Omissions Excepted

Fan, Fengshen (WTS)

From: Buckley, Mike <buckley.mike@prominent.com>
Sent: Friday, June 24, 2022 1:41 PM
To: Fan, Fengshen (WTS)
Subject: RE: SUEZ - Metering Pump - Quick Cost Estimate

Hi Fengshen,
The pump would be:

GMXA0424PVT2Q000UD1130BEN
$1,180.27 each, 3pcs in stock by now.

Regards,
Mike

From: Fan, Fengshen (WTS) <fengshen.fan@suez.com>
Sent: June 22, 2022 1:33 PM
To: Buckley, Mike <buckley.mike@prominent.com>
Subject: RE: SUEZ - Metering Pump - Quick Cost Estimate

Below is good:
For 22.7 l/h we can use a GammaX pump. It is 120VAC 1 phase, but it is NOT motor driven, It's solenoid.

This is used for turbidity measurement for clean water.

FF

From: Buckley, Mike <buckley.mike@prominent.com>
Sent: Wednesday, June 22, 2022 1:25 PM
To: Fan, Fengshen (WTS) <fengshen.fan@suez.com>
Subject: RE: SUEZ - Metering Pump - Quick Cost Estimate

Hi Fengshen,
Can you let me know what model of pump you prefer?
Do you want what we would typically offer Suez?
We will need at approx. discharge pressure. Assuming this is a typical Suez process, it is less that 30 PSI, so all pump models would work. If it's higher, please let me know.

For 22.7 l/h we can use a GammaX pump. It is 120VAC 1 phase, but it is NOT motor driven, It's solenoid.
Two options based on flow & pressure. Price is about the same.
This is at the limits of the GammaX, so if it is Hypo, we would use the slightly larger GammaXL.

If the client wants motor driven for a particular reason, we can offer a Sigma1 pump

Sigma/1 Control Version

Technical data:	60 Hz (1800 RPM) operation *Capacity at Maximum Pressure		Max. Stroke Rate	Output per Stroke	Max. Suction Lift	Max. Suction Pressure	Suction / Discharge Connector		Shipping Weight w/ Motor
Pump Version S1Cb H	psig	L/h	Stroke/ min	ml/ stroke	Water m	psig	DN	in	approx. kg
12017 PVT	145	21	90	4	7	14.5	10	1/2 MNPT	9
12017 SST	174	21	90	4	7	14.5	10	3/8 FNPT	12
12035 PVT	145	42	170	4	7	14.5	10	1/2 MNPT	9
12035 SST	174	42	170	4	7	14.5	10	3/8 FNPT	12
10050 PVT	145	49	200	4	7	14.5	10	1/2 MNPT	9
10050 SST	145	49	200	4	7	14.5	10	3/8 FNPT	12
10022 PVT	145	27	90	5.1	6	14.5	10	1/2 MNPT	9
10022 SST	145	27	90	5.1	6	14.5	10	3/8 FNPT	12
10044 PVT	145	53	170	5.1	6	14.5	10	1/2 MNPT	9
10044 SST	145	53	170	5.1	6	14.5	10	3/8 FNPT	12
07065 PVT	102	63	200	5.1	6	14.5	10	1/2 MNPT	9
07065 SST	102	63	200	5.1	6	14.5	10	3/8 FNPT	12
07042 PVT	102	52	90	9.7	3	14.5	15	3/4 MNPT	10
07042 SST	102	52	90	9.7	3	14.5	15	1/2 FNPT	14
04084 PVT	58	101	170	9.7	3	14.5	15	3/4 MNPT	10
04084 SST	58	101	170	9.7	3	14.5	15	1/2 FNPT	14
04120 PVT	58	117	200	9.7	3	14.5	15	3/4 MNPT	10
04120 SST	58	117	200	9.7	3	14.5	15	1/2 FNPT	14

Regards,
Mike

Mike Buckley
Chemical Vendor and WTC Sales Lead

ProMinent Fluid Controls Ltd. - CA
490 Southgate Drive, Guelph, Ontario, Canada, N1G 4P5
Phone: +1 519-836-5692

Toll Free: 1-888-709-9933 ext. 3081
Mobile: +1 416-428-3801
Fax: +1 519-836-5226
eMail: buckley.mike@prominent.com
Web: www.prominent.ca

We'd like to hear how we've done! Would you please participate in our 45 second Survey at http://survey.prominent.ca

This message (and any attachments) contains confidential information and is intended only for the individual named. If you are not the named addressee you should not disseminate, distribute or copy this e-mail. Please notify the sender immediately by e-mail if you have received this e-mail by mistake and delete this e-mail from your system. E-mail transmission cannot be guaranteed to be secure or error-free as information could be intercepted, corrupted, lost, destroyed, arrive late or incomplete, or contain viruses. The sender therefore does not accept liability for any errors or omissions in the contents of this message, which arise as a result of e-mail transmission. If verification is required please request a hard-copy version.

Ce message (incluant toute pièce jointe) contient des informations confidentielles et sont destinées uniquement à la personne nommée. Si vous n'êtes pas le destinataire désigné, vous ne devez pas diffuser, distribuer ou copier ce courriel. S'il vous plaît aviser immédiatement l'expéditeur par courriel si vous avez reçu ce courriel par erreur et supprimer ce courriel de votre système. Transmission par courriel ne peut être garantie d'être protégé ou exempt d'erreurs que les informations peuvent être interceptées, corrompues, perdues, détruites, arriver en retard ou incomplètes ou contenir des virus. L'expéditeur n'a donc pas accepter la responsabilité pour les erreurs ou omissions dans le contenu de ce message, qui surviennent à la suite de transmission du courriel. Si la vérification est nécessaire s'il vous plaît demander une version papier.

Please consider the environment before printing this e-mail

From: Fan, Fengshen (WTS) <fengshen.fan@suez.com>
Sent: June 22, 2022 10:35 AM
To: Buckley, Mike <buckley.mike@prominent.com>
Subject: SUEZ - Metering Pump - Quick Cost Estimate

Hi Mike,
Possibly could you please give me a quick cost estimate? Thanks, Fengshen

SAMPLE PUMP DATA	
NO OF DUTY PUMPS	4
TAG NUMBERS (INSTALLED)	20-P-321-X
TYPE OF PUMP	METERING
PUMP CAPACITY	0.1 GPM
ELECTRIC MOTOR	TEFC, 0.2 HP AT 1,775 RPM
VOLTAGE	120V/1PH/60HZ

The acquisition of SUEZ by Veolia has closed, as of January 18, 2022. The Water Technologies & Solutions business is now part of Veolia and operating under the conditions put forth by regional regulatory authorities. During this transition period, our business operations will continue as normal, independent from the rest of Veolia, and also independent from the newly created "New Suez".

ENGINEERING PROD. LTD.

5706 Royalmount Ave.
Montréal, Québec
H4P 1K

Tél. (514) 342-5656
Fax (514) 342-3131
www.acmeprod.com
info@acmeprod.com

MANUFACTURERS OF ENVIRONMENTAL CONTROLS AND SYSTEMS

June 14, 2022

Quote Number: Q220609-01

Re: Basket Strainers

Project: SUEZ - Tap Water Intake Filtration

We are pleased to quote you on the following:

IFC Model: 16-B125FIB1

Strainer type: Cast Iron Basket Strainer

Inlet/Outlet Connection: 16", 125#. FF Flanges per ASME B16.1

Body, Cover & Manifold Material: A126-B CAST IRON

Basket filtration: 1mm perforated screen. Option for 2mm at no extra cost.

Basket Material: 304 Stainless Steel

Cover Type: Bolted Flange

Cover Gasket: Graphite

Drain Connection: 2" NPT c/w Plug

Design Pressure: 150 PSI @ 150°F

Unit Price: $ 12,926.00 CAD each.

Note(s): 1 psid pressure drop at 3355 GPM with 1mm clean screen.

Delivery: 2-3 Weeks ARO
ExWorks: ACME Warehouse, Montreal, Canada
Terms: Net 30 days.
Validity: 30 days.

Best regards,

Philippe Ellison

Philippe Ellison
Project Manager
Acme Engineering Prod.

Fan, Fengshen (WTS)

From: Dias, Ana <dias.ana@prominent.com>
Sent: Friday, February 25, 2022 7:42 PM
To: Fan, Fengshen (WTS)
Cc: Buckley, Mike
Subject: RE: SUEZ - Standard Dual Mag-Drive Skid Costing
Attachments: 1.Drawing# 3120800500-210 R2 with markups-EPDM-PVC.pdf; 2.Drawing# 3120800500-210 R2-Viton-PVC-Vented.pdf

HI Fengshen,
Good evening,

Do you have a specific Suez project/bid number that I can refer to my quote?
Regarding the pricing for the dual-pump mag drive systems, Suez Engineering team asked for some changes that we are including to the standard system.
Some of the changes are:

1. Changed the suction line from 1" to 1-1/2"
2. Changed the inlet pressure gauge from 0-60 psig to 0-15 psig
3. Enlarged PE frame
4. 1-1/2" strainer and mounting bolts added to be shipped loose
5. Mounting tabs added to frame

Pricing:
The new pricing for the system with these changes are:

Dual Pump EPDM/PVC Dosing Skid: CAD 16,120.94
Dual Pump Viton/PVC/Vented Dosing Skid: CAD 16,619.46

Quote Validity: 30 days (March 27, 2022)
Lead Time: 8 weeks after approved drawings (ARAD). Considering 2 weeks for drawings + 2 weeks for approval, It would be 12 weeks ARO.
Drawing: attached (only to have an idea about the new skid)

Description of the skids are below:

Dual Pump EPDM/PVC Dosing Skid (with 575V motor)

SCOPE OF SUPPLY
Dual-pump (duty/back-up) floor-mounted skid. The system is designed as per attached drawing# 3120800500-210 R2 with markups-EPDM-PVC.

List of main components:
Pump (Qty:2)
-Pump type: MAG Drive Pump
-Model: DB9V-R-E-FF-M272
-Body: PVDF
-Impeller Bushing: Ceramic
-O-Ring: EPDM
-Connection: FRP ANSI 150#
-Impeller Size: 4.18"

-Magnet Set: 8-Pole
-Motor: 1.0 HP, 3 ph/60 Hz/575V, 3450 rpm, TEFC
-Motor Adapter: 56C
-VFD: Not included

Skid components
-Piping and fittings:
-Suction line: 1-1/2" PVC, Sch 80, socket weld, flanged and threaded
-Discharge line: 1" PVC, Sch 80, socket weld, flanged and threaded
-Suction termination point: 1-1/2" FF flange 150#, PVC
-Discharge termination point: 1" FF flange 150#, PVC
-Y-strainer: 1-1/2" PVC/EPDM, Chemline, socket weld
-Pressure Gauge:
For suction line: 2.5" Dial 0-15 PSI stainless steel pressure gauge, liquid filled, with PVC/Teflon isolator, SW, Wika
For discharge line: 2.5" Dial 0-60 PSI stainless steel pressure gauge, liquid filled, with PVC/Teflon isolator, SW, Wika
-Ball valve: 1/2", 1" and 1-1/2" PVC/EPDM, true union with socket weld ends, Chemline
-Ball Check valve: 1" PVC/EPDM, true union with socket ends, Chemline
-Diaphragm valve: 1" PVC/EPDM, true union with socket ends, type 514, Georg Fischer
-Actuated ball valve: 1" PVC/EPDM ball valve, true union and socket ends with spring return pneumatic actuator with Epoxy and Rilsan coated die cast aluminum body and end caps, stainless steel shaft. Complete with Pad Mounted Pilot Valve, 24VDC, anodized aluminum NEMA 4X body, 1/4" NPT pressure port, 1/2" NPT DIN electrical connector, w/ manual override, Chemline
-Pressure Relief Valve: 1/2" PVC/PTFE, 2-port, 0-150 psig adjustable, socket weld, non-ASME, ProMinent
-Magnetic flowmeter: 10P25-ER1A1RA0B5BA with grounding disc DK5GD-25BEL, 24 VDC power supply, range 0.264-79.252 USGPM, flanged, Endress+Hauser
-Seal material: EPDM/ Teflon
-Frame: PE floor-mounted frame without containment or drip tray
-Junction Box: NEMA 4X FRP only for flowmeter and actuated valve

Dual Pump Viton/PVC/Vented Dosing Skid

SCOPE OF SUPPLY
Dual-pump (duty/back-up) floor-mounted skid. The system is designed as per attached drawing# 3120800500-210 R2-Viton-PVC-Vented..

List of main components:
Pump (Qty:2)
-Pump type: MAG Drive Pump
-Model: DB9V-R-FF-M272
-Body: PVDF
-Impeller Bushing: Ceramic
-O-Ring: FKM
-Connection: FRP ANSI 150#
-Impeller Size: 4.18"
-Magnet Set: 8-Pole
-Motor: 1.0 HP, 3 ph/60 Hz/575V, 3450 rpm, TEFC
-Motor Adapter: 56C
-VFD: Not included

Skid components
-Piping and fittings:
-Suction line: 1-1/2" PVC, Sch 80, socket weld, flanged and threaded
-Discharge line: 1" PVC, Sch 80, socket weld, flanged and threaded
-Suction termination point: 1-1/2" FF flange 150#, PVC
-Discharge termination point: 1" FF flange 150#, PVC
-Y-strainer: 1-1/2" PVC/Viton, Chemline, socket weld
-Pressure Gauge:
For suction line: 2.5" Dial 0-15 PSI stainless steel pressure gauge, liquid filled, with PVC/Teflon isolator, SW, Wika
For discharge line: 2.5" Dial 0-60 PSI stainless steel pressure gauge, liquid filled, with PVC/Teflon isolator, SW, Wika
-Ball valve: 1/2", 1" and 1-1/2" PVC/Viton, true union with socket weld ends, Chemline

-Ball Check valve: 1" PVC/Viton, true union with socket ends, Chemline
-Diaphragm valve: 1" PVC/Viton, true union with socket ends, type 514, Georg Fischer
-Actuated ball valve: 1" PVC/Viton ball valve, true union and socket ends with spring return pneumatic actuator with Epoxy and Rilsan coated die cast aluminum body and end caps, stainless steel shaft. Complete with Pad Mounted Pilot Valve, 24VDC, anodized aluminum NEMA 4X body, 1/4" NPT pressure port, 1/2" NPT DIN electrical connector, w/ manual override, Chemline
-Pressure Relief Valve: 1/2" PVC/PTFE, 2-port, 0-150 psig adjustable, socket weld, non-ASME, ProMinent
-Magnetic flowmeter: 10P25-ER1A1RA0B5BA with grounding disc DK5GD-25BEL, 24 VDC power supply, range 0.264-79.252 USGPM, flanged, Endress+Hauser
-Seal material: Viton/ Teflon
-Frame: PE floor-mounted frame without containment or drip tray
-Junction Box: NEMA 4X FRP only for flowmeter and actuated valve

If you have any questions, please, let me know,

Thank you,

Ana Dias
Applications Engineering Specialist

ProMinent Fluid Controls Ltd. - CA
490 Southgate Drive, Guelph, Ontario, Canada, N1G 4P5
Phone: +1 519-780-3029

Toll Free: 1-888-709-9933 ext. 3029
Mobile:
Fax: +1 519-836-5226
eMail: dias.ana@prominent.com
Web: www.prominent.ca

We'd like to hear how we've done! Would you please participate in our 45 second Survey at http://survey.prominent.ca

This message (and any attachments) contains confidential information and is intended only for the individual named. If you are not the named addressee you should not disseminate, distribute or copy this e-mail. Please notify the sender immediately by e-mail if you have received this e-mail by mistake and delete this e-mail from your system. E-mail transmission cannot be guaranteed to be secure or error-free as information could be intercepted, corrupted, lost, destroyed, arrive late or incomplete, or contain viruses. The sender therefore does not accept liability for any errors or omissions in the contents of this message, which arise as a result of e-mail transmission. If verification is required please request a hard-copy version.

Ce message (incluant toute pièce jointe) contient des informations confidentielles et sont destinées uniquement à la personne nommée. Si vous n'êtes pas le destinataire désigné, vous ne devez pas diffuser, distribuer ou copier ce courriel. S'il vous plaît aviser immédiatement l'expéditeur par courriel si vous avez reçu ce courriel par erreur et supprimer ce courriel de votre système. Transmission par courriel ne peut être garantie d'être protégé ou exempt d'erreurs que les informations peuvent être interceptées, corrompues, perdues, détruites, arriver en retard ou incomplètes ou contenir des virus. L'expéditeur n'a donc pas accepter la responsabilité pour les erreurs ou omissions dans le contenu de ce message, qui surviennent à la suite de transmission du courriel. Si la vérification est nécessaire s'il vous plaît demander une version papier.

Please consider the environment before printing this e-mail

From: Buckley, Mike <buckley.mike@prominent.com>
Sent: February 25, 2022 3:31 PM
To: Dias, Ana <dias.ana@prominent.com>
Subject: FW: RE: SUEZ - Standard Dual Mag-Drive Skid Costing

From: Fan, Fengshen (WTS) <fengshen.fan@suez.com>
Sent: February 25, 2022 3:06 PM

To: Buckley, Mike <buckley.mike@prominent.com>
Subject: [EXT] RE: SUEZ - Standard Dual Mag-Drive Skid Costing

Hi Mike,
Not get your answer yet? Fengshen

From: Fan, Fengshen (WTS)
Sent: Tuesday, February 22, 2022 1:41 PM
To: Buckley, Mike <buckley.mike@prominent.com>
Subject: RE: SUEZ - Standard Dual Mag-Drive Skid Costing

Hi Mike,
Could you please update this? Fengshen

From: Buckley, Mike <buckley.mike@prominent.com>
Sent: Friday, October 8, 2021 2:59 PM
To: Fan, Fengshen <fengshen.fan@suez.com>
Subject: RE: SUEZ - Standard Dual Mag-Drive Skid Costing

Hi Fengshen,
Current pricing as it stands now is

Dual-Pump EPDM/PVC Dosing Skid: $ 13,196.00

Dual-Pump Viton/PVC/Vented Dosing Skid: $ 13,700.00

Best regards,
Mike

Mike Buckley
Chemical Vendor and WTC Sales Lead

ProMinent Fluid Controls Ltd. - CA
490 Southgate Drive, Guelph, Ontario, Canada, N1G 4P5
Phone: +1 519-836-5692

Toll Free: 1-888-709-9933 ext. 3081
Mobile: +1 416-428-3801
Fax: +1 519-836-5226
eMail: buckley.mike@prominent.com
Web: www.prominent.ca

We'd like to hear how we've done! Would you please participate in our 45 second Survey at http://survey.prominent.ca

This message (and any attachments) contains confidential information and is intended only for the individual named. If you are not the named addressee you should not disseminate, distribute or copy this e-mail. Please notify the sender immediately by e-mail if you have received this e-mail by mistake and delete this e-mail from your system. E-mail transmission cannot be guaranteed to be secure or error-free as information could be intercepted, corrupted, lost, destroyed, arrive late or incomplete, or contain viruses. The sender therefore does not accept liability for any errors or omissions in the contents of this message, which arise as a result of e-mail transmission. If verification is required please request a hard-copy version.

Ce message (incluant toute pièce jointe) contient des informations confidentielles et sont destinées uniquement à la personne nommée. Si vous n'êtes pas le destinataire désigné, vous ne devez pas diffuser, distribuer ou copier ce courriel. S'il vous plaît aviser immédiatement l'expéditeur par courriel si vous avez reçu ce courriel par erreur et supprimer ce courriel de votre système. Transmission par courriel ne peut être garantie d'être protégé ou exempt d'erreurs que les

informations peuvent être interceptées, corrompues, perdues, détruites, arriver en retard ou incomplètes ou contenir des virus. L'expéditeur n'a donc pas accepter la responsabilité pour les erreurs ou omissions dans le contenu de ce message, qui surviennent à la suite de transmission du courriel. Si la vérification est nécessaire s'il vous plaît demander une version papier.

Please consider the environment before printing this e-mail

From: Fan, Fengshen <fengshen.fan@suez.com>
Sent: October 8, 2021 11:08 AM
To: Buckley, Mike <buckley.mike@prominent.com>
Subject: [EXT] SUEZ - Standard Dual Mag-Drive Skid Costing

Hi Mike,
The price in my hand for the Standard Dual Mag-Drive Skid Costing (hypo) = $13,240 CAD. Please let me know if the cost is still good.

Thanks.

Fengshen

Before printing a copy of this email, please consider the environment. This email and any attachments are confidential and intended for the named recipient or entity to which it is addressed only. If you are not the intended recipient, you are hereby notified that any review, re-transmission, or conversion to hard copy, copying, circulation or other use of this message and any attachments is strictly prohibited. Whilst all efforts are made to safeguard their content, emails are not secure and SUEZ cannot guarantee that attachments are virus free or compatible with your systems and does not accept liability in respect of viruses or computer problems experienced. SUEZ reserves the right to monitor all email communications through its internal and external networks



Enlarge & Video

IBC TANKS

Hold as much liquid as **six 55-gallon drums**. Use up to 33% less floor space.

- Store and dispense water, pesticides or other liquids and powders.
- Chemical-resistant HDPE tank surrounded by a galvanized steel cage.
- Mounted to steel frame pallet for easy transport.
- Stack up to 3 high.
- 4-way fork access.
- 6" diameter fill cap, 2" diameter drain.
- Meets FDA Requirements.



IBC TANKS

MODEL NO.	DESCRIPTION	DIMENSIONS L x W x H	CAPACITY	UN RATING	WT. (LBS.)	PRICE EACH		ADD TO CART
						1	3+	
H-3886	IBC Tank	48 x 40 x 46"	275 Gallon	31HA1/Y	128	$791	$778	1 ADD
H-4420		48 x 40 x 53"	330 Gallon		146	845	818	1 ADD

SHIPS VIA MOTOR FREIGHT
Restrictions apply. See items for details.

Suez Water Technologies

3239 Dundas Street West

Oakville, ON

L6M 4B2

Kind Attn.: Fengshen Fan

Contact Number: 905 469 7792

Email: fengshen.fan@suez.com

RFQ Number: Email Dated 01.06.2022

Products: Air compressor Package

Project: SUEZ – 360077

Good day Fengshen,

We thank you for providing us with an opportunity to quote for this project.

In response to your request for quote, we are pleased to offer our proposal # 3308112 Rev.0 which is including below items:

- Two (2) x Atlas Copco Compressor Model **CR7.5-TS-80Gal Vertical 460/3/60-IS** (Two-Stage Splash Lubricated - Full Cast Iron Piston Compressor),
- Two (2) x Atlas Copco standalone refrigerant dryer model **FX15**,
- Two (2) x Atlas Copco Coalescing Filter Model **UD15+.**

We trust the enclosed is to your satisfaction and we look forward to your response and further discussions.

Looking forward to your valuable business,

Best regards,

Mehdi Raeesian – MSc., C.Eng, P.Eng
Technical Sales Engineer

Atlas Copco Compressors Canada

Visitor Address: Unit 276, 2880 – 45 Avenue SE, Calgary, AB T2B 3M1

Phone: +1 403 259 6069 - Mobile: +1 587 926 0135 - Fax: +1 514 421 20 92
E-mail: Mehdi.Raeesian@Atlascopco.com

Visit Atlas Copco at: https://www.atlascopco.com/en-ca/compressors
Follow us at: Facebook - LinkedIn - Twitter - YouTube - Instagram

Home of Industrial Ideas

Contents

Technical / Commercial Summary ***3***

Terms and Conditions ***6***

List of Attachments ***7***

Technical / Commercial Summary

(All Equipment are Vendor Standard)

Item	Product No.	Product Description	Qty	Unit Value (CAD)	Total Price (CAD)
1.0	**PISTON AIR COMPRESSOR**		2	$ 3,750.00 Ea.	$ 7,500.00 Ttl.

Atlas Copco Industrial Series 7.5HP two-stage splash lubricated piston air compressor mounted on 80 gallon vertical air vessel model **CR7.5-TS-80Gal Vertical -IS (2020 0400 18)**



➢ Key Features

- Cast iron design to ensure durability and reliability for all demanding applications
- Fully enclosed belt guard for additional equipment safety
- ASME safety valves
- Stainless steel valves
- Aftercooler included for lower compressed air outlet temperature
- Low oil level switch included
- Start/Stop pressure switch control
- Magnetic starter included
- Electronic tank drain
- 10-15 HP models come equipped with head unloaders
- TEFC motor and NEMA 4 control panel (Option)
- 1-year bumper-to-bumper warranty

➢ Characteristics

- Free air delivery: 22.6* cfm @ 175 Psig / 23.8* cfm @ 100 Psig
  * Flow at reference conditions (14.5 PSI, 68°F, 0% RH)
- Noise level: 84 dB(A)
- Connection: 3/4" NPT
- Dimensions: 32" x 26" x 75" (L x W x H)
- Weight: 599 lbs

High Efficiency Electric Motor

- 7.5HP
- 460-575 Vac / 3 Ph / 60

See attached Scope of Supply for complete equipment description.

Item	Product No.	Product Description	Qty	Unit Value (CAD)	Total Price (CAD)
2.0	**AIR DRYER**		2	$ 1,500.00 Ea.	$ 3,000.00 Ttl.

Atlas Copco **FX15** refrigerant air dryer. Removes any condensate from the compressed air and provides a steady pressure dew point as low as +3 to +4°C.

➢ Required compressed air quality at lowest cost



- Increased reliability and lifetime of tools
- and equipment.
- Digital display for precise visual monitoring of pressure dew point and dryer performance.
- Plug-and-play installation.
- Sustainable refrigerant to ensure lowest possible carbon footprint and energy consumption.

➢ Characteristics:

- Maximum working pressure:s 232 psig
- Inlet capacity: 30 cfm
- Pressure drop at full flow: 3.63 psig
- Connections: 3/4 " NPT
- Voltage: 115V / 1Ph / 60Hz
- Dimensions: 20" x 14" x 18" (L x W x H)
- Weight: 44 lbs

See attached Scope of Supply for complete equipment description.

Item	Product No.	Product Description	Qty	Unit Value (CAD)	Total Price (CAD)
3.0	**FILTERS**		2	$ 355.00 Ea.	$ 355.00 Ttl.

Atlas Copco's innovative **UD+** filters combine **two filtration steps in one**, removes contaminants such as liquid water, oil aerosol & wet dust.

➢ Simple solution to reduce environmental impact



- Lowest pressure drop with Atlas Copco's patented Nautilus multi-wrap technology.
- Two-in-one filter for optimum space saving, reduced installation and service costs compared to traditional two filter set-up (DD+ & PD+).
- The differential pressure gauge allows simple monitoring of pressure drop.

➢ Filter Characteristics:

- Atlas Copco model **UD15+**
- Capacity: 32CFM at 100 Psig
- Wet pressure drop: 3.19 Psi
- Liquid water and oil aerosol 0.001 ppm
- Particles 0.01 micron
- Weight: 2.7 lbs
- Connections: 1/2" NPT
- Including Pressure Differential Gauge (PDG) as standard

Item	Product No.	Product Description	Qty	Unit Value (CAD)	Total Price (CAD)
Please refer attached documents for working principal and specification.					
4.0		Vendor Standard Documents	1	Included	Included
5.0		Startup, commissioning, and basic operator training (overview of machine and controller navigation) by an Atlas Copco Certified Service Technician (One day)	1	Extra	Extra
6.0		Spare Parts for Startup and Commissioning	1	Not Required	Not Required
7.0		Spare Parts for operation (Refer attached Spare part list)	1	Extra	Extra
8.0		Shipment to customer site	1	Extra	Extra

Terms and Conditions

Prices Valid For:	60 Days
Delivery:	TBS
Payment:	100% upon shipment
Terms:	(Net 30 Days)
Currency:	Canadian Dollars
Taxes/GST:	Extra
Delivery:	FCA-Our Warehouse in Montreal

Warranty

- Stationary oil-injected rotary screw compressors:
  - Extended Warranty*: 5 years from start-up for Screw Element
  - Extended Warranty*: 2 years from start-up for Electric Main Drive (motor) and Variable speed Drive (VSD)
  - 12 months from start-up or 18 months from shipment, whichever comes first for entire unit (bumper to bumper)
- All warranties are Ex-Works Atlas Copco Compressors Canada nearest branch

Standard documentation

- Standard drawings (general arrangement, PID, electrical, installation) can be supplied if requested
- O&M manuals are supplied in pdf format

* - All units eligible for Extended Warranty (Screw Element, Motor and VSD) coverage must be (i) registered with Atlas Copco Canada within the first 3 months after the start-up, (ii) maintained and inspected from the start-up according to Atlas Copco preventive maintenance guidelines listed in the instruction manual (delivered together with the compressor) using genuine Atlas Copco parts and lubricants.

List of Attachments

1- Compressor Documents (Brochures, Description, Diagrams…)
2- Dryer Documents (Brochures, Description, Diagrams…)
3- Filter Documents (Brochures, Description, Diagrams…)

EXHIBIT L

D-BEN Security Systems, Inc. –
List of Equipment and Quote

From

D-BEN Security Systems, Inc.

91 Thompson Street
Newburgh NY 12550
(845)565-4024

Quote No. **2015479**

Type	Installation
Prepared By	Gregory DeBenedictus
Created On	04/03/2025
Valid Until	06/30/2025

Quote For

Town of New Windsor

Town of New Windsor Caesars Lane WWTP
145 Caesars Lane
New Windsor NY 12553

Description of Work

Caesar Lane - Dewatering Blg Sanitary Phase 2
Buildings 200,400,500,700 Gate (Reader and Intercom)

Services to be completed

[Alarm Systems] Location - Building
Parts and Smarts, Fire Alarm System, Access Control and Cameras

Provide all shop drawings, submittals, parts and programming.

Installation, wiring, pipe performed by GC contracted electrician

Parts, Labor, and Items	Quantity
Algo 8201 IP PoE Intercom	1
Schlage RCK15 Multi-Technology IP Reader Controller With Keypad, Single Gang Mount, Black	16
Schlage 47274561 RC Series Pigtail Cable 10'	16
Advanced Security Module	16
Speco O8T9 8MP 4K IP Turret Camera with Advanced Analytics, 2.8mm Fixed Lens, White	22
Potter 127 Point Addressable Fire Panel	4
160 Character LCD Annunciator	4
M2M Fire Alarm LTE Radio	1
Battery 12V 18Ah	8
SOUNDER BASE	7
PAD300 PHOTO/CO DETECTOR	4
PAD300 CO DETECTOR	3
PAD300 PHOTO DETECTOR	18
6" DETECTOR BASE	18
Potter PAD 100 Addressable Pull Station Single Action	5

Parts, Labor, and Items	Quantity
Potter Low Profile Strobe	15
Potter Low Profile Horn/Strobe	4
Potter Weatherproof Strobes and Clear Lens	19
Potter Weatherproof Horn/Strobe	10
Potter THERMOFLEX® MP Series Heat Detector	38
Potter Pull Station, Single Action, Weatherproof, Key Reset	10
Potter Weather Proof Backbox for Pull Station	9
Potter PAD 100 Micro Input Module	46
Submittals and Drafting	1
Prevailing Wage Labor Rate	1
Central Station Monitoring	12
NFPA 24 Hour Test Signals	12
M2M Fire Lte Data Plan	12
POTTER NCE-1000 NETWORK CARD-CAT6	4
Surcharge	1
GRAND TOTAL	**$84,053.92**

Terms and Conditions

Deposit Required

By my signature below, I authorize work to begin and agree to pay the Grand Total according to the terms and conditions of this agreement.

Name: _____ Date: _____

Signature: _____

EXHIBIT M

NYSDEC Existing Outfall Abandonment Permit

PERMIT
Under the Environmental Conservation Law (ECL)

Permittee and Facility Information

Permit Issued To:
TOWN OF NEW WINDSOR
555 UNION AVE
NEW WINDSOR, NY 12553-6140
(845) 567-4600

Facility:
Caesars Lane Wastewater Treatment Plant
CAESARS LN
NEW WINDSOR, NY 12550

Facility Location: in NEW WINDSOR in ORANGE COUNTY
Facility Principal Reference Point: NYTM-E: 581.291 NYTM-N: 4590.355
Latitude: 41°27'38.4" Longitude: 74°01'35.8"
Project Location: Existing outfall at the mouth of Moodna Creek
Authorized Activity: This permit authorizes disturbance to Freshwater Wetland CO-10, Class 1 and excavation/fill within the Moodna Creek (NYS WIN H-89, Class C) below mean high associated with the removal of the above grade features of the existing sanitary sewer outfall associated with State Pollutant Discharge Elimination System (SPDES) permit NY0022446, which is being relocated to the treatment plant.

Permit Authorizations

Freshwater Wetlands - Under Article 24
Permit ID 3-3348-00055/00016
New Permit Effective Date: 12/18/2023 Expiration Date: 12/31/2028
Excavation & Fill in Navigable Waters - Under Article 15, Title 5
Permit ID 3-3348-00055/00017
New Permit Effective Date: 12/18/2023 Expiration Date: 12/31/2028

NYSDEC Approval

By acceptance of this permit, the permittee agrees that the permit is contingent upon strict compliance with the ECL, all applicable regulations, and all conditions included as part of this permit.

Permit Administrator: REBECCA S CRIST, Deputy Regional Permit Administrator
Address: NYSDEC Region 3 Headquarters
21 S Putt Corners Rd
New Paltz, NY 12561

Authorized Signature: Rebecca S. Crist Date 12 / 18 /2023

Distribution List

Michael Weeks, McGoey, Hauser & Edsall Consulting
Army Corps of Engineers
Orange County Department of Health
Angela Schimizzi, NYSDEC Div of Marine Resoures R3
Michael Fraatz, NYSDEC Bur. of Ecosystem Health R3
Lisa Masi, NYSDEC Bureau of Wildlife, R3
Manju Cherian, NYSDEC Division of Water, R3
Evan Masten, NYS Division of Lands & Forests, R3

Permit Components

NATURAL RESOURCE PERMIT CONDITIONS

GENERAL CONDITIONS, APPLY TO ALL AUTHORIZED PERMITS

NOTIFICATION OF OTHER PERMITTEE OBLIGATIONS

NATURAL RESOURCE PERMIT CONDITIONS - Apply to the Following Permits: FRESHWATER WETLANDS; EXCAVATION & FILL IN NAVIGABLE WATERS

1. **Conformance With Plans** All activities authorized by this permit must be in strict conformance with the approved plans submitted by the applicant or applicant's agent as part of the permit application. Such approved plans were prepared by McGoey, Hauser & Edsall. consisting of Sheet C-103, “Site Plan And Typical Details & Notes”. Any work described in the approved plans that was completed prior to the effective date of this permit is not authorized by this permit..

2. **Post Permit Sign** The permit sign enclosed with this permit shall be posted in a conspicuous location on the worksite and adequately protected from the weather.

3. **Notice of Intent to Commence Work** The Permittee shall notify the Department 48 hours prior to the commencement of work on the project by emailing Angela Schimizzi, angela.schimizzi@dec.ny.gov. The email needs to include the permit number, permittee name, and the project start date.

4. **Manhole Abandonment** As specified in approved plan, all manholes to be abandoned will have any frames, grates, and concrete risers removed to at least 1 ft below existing grade. Any remaining structure will be filled with rip-rap and topped with clean soil to match existing grade.

5. **Remnant Access Road Structures to Be Removed and Area Restored** The existing 48” pipe stream crossing and exposed geotextile in vicinity to be removed completely. Area to be restored to

match existing conditions and the stream grade restored to the level prior to installation. All removal must be to the satisfaction of the Department.

All existing geotextile will be cut back to a minimum of 30 feet from the stream embankments.

6. Prohibition Period for Nesting Birds To protect nesting marsh birds, including threatened and/or endangered species, no outfall removal activities may occur between April 15th and August 31st of any calendar year.

7. Removal of Trees on State Lands Minimal cutting of woody vegetation will be allowed. The permittee must meet with Department forester before any trees are cut.

One (1) week prior to commencing any tree or vegetation clearing pursuant to this permit, the limits of route shall be flagged and any live trees 6" diameter or larger to be removed outside of the flagged route must be marked. A DEC State Lands Forester shall inspect the route and trees to be removed prior to the start of clearing.

All tree limbs shall be cut/pruned perpendicular to the branch outside the branch collar. All pruning shall conform to ANSI 300 (Part 1) Tree Pruning Standards.

The stumps of the trees to be removed must be a height of 6" or less.

8. Use of Motorized Equipment on State Lands The permittee must call the Forester, Evan Masten, at (845) 256-3074 before any motorized equipment moves on to DEC State Lands and before machinery moves off of DEC State Lands.

9. In-Water Work During Low Tide Only Work below Mean High Water shall occur only during the period 2 hours before and after the scheduled low tide.

10. Clean Fill Only All fill shall consist of clean soil, sand and/or gravel that is free of the following substances: asphalt, slag, flyash, broken concrete, demolition debris, garbage, household refuse, tires, woody materials including tree or landscape debris, and metal objects. The introduction of materials toxic to aquatic life is expressly prohibited.

11. No Construction Debris in Wetland or Adjacent Area Any debris or excess materials from construction of this project (including earth, construction materials, trees and stumps) shall be immediately and completely removed from the wetland and adjacent area to an appropriate upland area for disposal.

12. No Equipment in the Water Heavy equipment operation in the water is prohibited. With backhoes and similar heavy equipment, the bucket may enter the water.

13. Seed, Mulch Disturbed Soils All areas of soil disturbance resulting from this project (above the mean high water line) shall be seeded with an appropriate seed mix and mulched with straw within one week of final grading.

14. Precautions Against Contamination of Waters All necessary precautions shall be taken to preclude contamination of any wetland or waterway by suspended solids, sediments, fuels, solvents, lubricants, epoxy coatings, paints, concrete, leachate or any other environmentally deleterious materials associated with the project.

15. **No Interference With Navigation** There shall be no unreasonable interference with navigation by the work herein authorized.

16. **State Not Liable for Damage** The State of New York shall in no case be liable for any damage or injury to the structure or work herein authorized which may be caused by or result from future operations undertaken by the State for the conservation or improvement of navigation, or for other purposes, and no claim or right to compensation shall accrue from any such damage.

17. **State May Require Site Restoration** If upon the expiration or revocation of this permit, the project hereby authorized has not been completed, the applicant shall, without expense to the State, and to such extent and in such time and manner as the Department of Environmental Conservation may lawfully require, remove all or any portion of the uncompleted structure or fill and restore the site to its former condition. No claim shall be made against the State of New York on account of any such removal or alteration.

18. **State May Order Removal or Alteration of Work** If future operations by the State of New York require an alteration in the position of the structure or work herein authorized, or if, in the opinion of the Department of Environmental Conservation it shall cause unreasonable obstruction to the free navigation of said waters or flood flows or endanger the health, safety or welfare of the people of the State, or cause loss or destruction of the natural resources of the State, the owner may be ordered by the Department to remove or alter the structural work, obstructions, or hazards caused thereby without expense to the State, and if, upon the expiration or revocation of this permit, the structure, fill, excavation, or other modification of the watercourse hereby authorized shall not be completed, the owners, shall, without expense to the State, and to such extent and in such time and manner as the Department of Environmental Conservation may require, remove all or any portion of the uncompleted structure or fill and restore to its former condition the navigable and flood capacity of the watercourse. No claim shall be made against the State of New York on account of any such removal or alteration.

GENERAL CONDITIONS - Apply to ALL Authorized Permits:

1. **Facility Inspection by The Department** The permitted site or facility, including relevant records, is subject to inspection at reasonable hours and intervals by an authorized representative of the Department of Environmental Conservation (the Department) to determine whether the permittee is complying with this permit and the ECL. Such representative may order the work suspended pursuant to ECL 71- 0301 and SAPA 401(3).

The permittee shall provide a person to accompany the Department's representative during an inspection to the permit area when requested by the Department.

A copy of this permit, including all referenced maps, drawings and special conditions, must be available for inspection by the Department at all times at the project site or facility. Failure to produce a copy of the permit upon request by a Department representative is a violation of this permit.

2. **Relationship of this Permit to Other Department Orders and Determinations** Unless expressly provided for by the Department, issuance of this permit does not modify, supersede or rescind any order

or determination previously issued by the Department or any of the terms, conditions or requirements contained in such order or determination.

3. **Applications For Permit Renewals, Modifications or Transfers** The permittee must submit a separate written application to the Department for permit renewal, modification or transfer of this permit. Such application must include any forms or supplemental information the Department requires. Any renewal, modification or transfer granted by the Department must be in writing. Submission of applications for permit renewal, modification or transfer are to be submitted to:

Regional Permit Administrator
NYSDEC Region 3 Headquarters
21 S Putt Corners Rd
New Paltz, NY12561

4. **Submission of Renewal Application** The permittee must submit a renewal application at least 30 days before permit expiration for the following permit authorizations: Excavation & Fill in Navigable Waters, Freshwater Wetlands.

5. **Permit Modifications, Suspensions and Revocations by the Department** The Department reserves the right to exercise all available authority to modify, suspend or revoke this permit. The grounds for modification, suspension or revocation include:

a. materially false or inaccurate statements in the permit application or supporting papers;

b. failure by the permittee to comply with any terms or conditions of the permit;

c. exceeding the scope of the project as described in the permit application;

d. newly discovered material information or a material change in environmental conditions, relevant technology or applicable law or regulations since the issuance of the existing permit;

e. noncompliance with previously issued permit conditions, orders of the commissioner, any provisions of the Environmental Conservation Law or regulations of the Department related to the permitted activity.

6. **Permit Transfer** Permits are transferrable unless specifically prohibited by statute, regulation or another permit condition. Applications for permit transfer should be submitted prior to actual transfer of ownership.

NOTIFICATION OF OTHER PERMITTEE OBLIGATIONS

Item A: Permittee Accepts Legal Responsibility and Agrees to Indemnification
The permittee, excepting state or federal agencies, expressly agrees to indemnify and hold harmless the Department of Environmental Conservation of the State of New York, its representatives, employees, and agents ("DEC") for all claims, suits, actions, and damages, to the extent attributable to the permittee's acts or omissions in connection with the permittee's undertaking of activities in connection with, or operation and maintenance of, the facility or facilities authorized by the permit whether in

compliance or not in compliance with the terms and conditions of the permit. This indemnification does not extend to any claims, suits, actions, or damages to the extent attributable to DEC's own negligent or intentional acts or omissions, or to any claims, suits, or actions naming the DEC and arising under Article 78 of the New York Civil Practice Laws and Rules or any citizen suit or civil rights provision under federal or state laws.

Item B: Permittee's Contractors to Comply with Permit
The permittee is responsible for informing its independent contractors, employees, agents and assigns of their responsibility to comply with this permit, including all special conditions while acting as the permittee's agent with respect to the permitted activities, and such persons shall be subject to the same sanctions for violations of the Environmental Conservation Law as those prescribed for the permittee.

Item C: Permittee Responsible for Obtaining Other Required Permits
The permittee is responsible for obtaining any other permits, approvals, lands, easements and rights-of-way that may be required to carry out the activities that are authorized by this permit.

Item D: No Right to Trespass or Interfere with Riparian Rights
This permit does not convey to the permittee any right to trespass upon the lands or interfere with the riparian rights of others in order to perform the permitted work nor does it authorize the impairment of any rights, title, or interest in real or personal property held or vested in a person not a party to the permit.

Item E: SEQR Unlisted Action, No Significant Impact Under the State Environmental Quality Review Act (SEQR), the project associated with this permit is classified as an Unlisted Action with New Windsor Town Board designated as the lead agency. It has been determined that the project will not have a significant effect on the environment.

New York State

Department of Environmental Conservation

NOTICE

The Department of Environmental Conservation (DEC) has issued permit(s) pursuant to the Environmental Conservation Law for work being conducted at this site. For further information regarding the nature and extent of work approved and any Department condition on it, contact the DEC at 845-256-3054 or dep.r3@dec.ny.gov. Please refer to the permit number shown when contacting the DEC.

Permittee: Town of New Windsor

Permit No. 3-3348-00055/00016&17

Effective Date: 12/18/2023

Expiration Date: 12/31/2023

For Work at the Existing Outfall at the Mouth of the Moodna Creek

NOTE: This notice is **NOT** a permit.

EXHIBIT N

NYSDEC New Outfall Permit

PERMIT
Under the Environmental Conservation Law (ECL)

Permittee and Facility Information

Permit Issued To:
TOWN OF NEW WINDSOR
555 UNION AVE
NEW WINDSOR, NY 12553-6140
(845) 567-4600

Facility:
Caesars Lane Wastewater Treatment Plant
CAESARS LN
NEW WINDSOR, NY 12550

Facility Location: in NEW WINDSOR in ORANGE COUNTY
Facility Principal Reference Point: NYTM-E: 581.291 NYTM-N: 4590.355
Latitude: 41°27'38.4" Longitude: 74°01'35.8"
Project Location: Bed of the Moodna Creek at the WWTP
Authorized Activity: This permit authorizes the excavation of 306 square feet of the Moodna Creek below mean high and the placement in that area of an 18-inch thick layer of riprap as part of the construction of a new sanitary sewer outfall.

Permit Authorizations

Excavation & Fill in Navigable Waters - Under Article 15, Title 5
Permit ID 3-3348-00055/00019
Renewal Effective Date: 12/18/2023 Expiration Date: 12/31/2028

NYSDEC Approval

By acceptance of this permit, the permittee agrees that the permit is contingent upon strict compliance with the ECL, all applicable regulations, and all conditions included as part of this permit.

Permit Administrator: REBECCA S CRIST, Deputy Regional Permit Administrator
Address: NYSDEC Region 3 Headquarters
21 S Putt Corners Rd
New Paltz, NY 12561

Authorized Signature: Rebecca S. Crist Date 12 / 18 / 2023

Distribution List

Michael Weeks, McGoey, Hauser & Edsall Consulting
Army Corps of Engineers
Angela Schimizzi, NYSDEC Div of Marine Resoures R3
Michael Fraatz, NYSDEC Bur. of Ecosystem Health R3
Lisa Masi, NYSDEC Bureau of Wildlife, R3

Permit Components

NATURAL RESOURCE PERMIT CONDITIONS

GENERAL CONDITIONS, APPLY TO ALL AUTHORIZED PERMITS

NOTIFICATION OF OTHER PERMITTEE OBLIGATIONS

NATURAL RESOURCE PERMIT CONDITIONS - Apply to the Following Permits: EXCAVATION & FILL IN NAVIGABLE WATERS

1. **Conformance With Plans** All activities authorized by this permit must be in strict conformance with the approved plans submitted by the applicant or applicant's agent as part of the permit application. Such approved plans were prepared by McGoey, Hauser & Edsall. titled "Caesars Lane WWTP Expansion Phase" dated 12/01/2022, and consisting of Sheet C-100, “Overall Site Development Plan” and Sheet C-101 “Enlarged Outfall Plan”.

2. **Post Permit Sign** The permit sign enclosed with this permit shall be posted in a conspicuous location on the worksite and adequately protected from the weather.

3. **Notice of Intent to Commence Work** The Permittee shall notify the Department 48 hours prior to the commencement of work on the project by emailing Angela Schimizzi, angela.schimizzi@dec.ny.gov. The email needs to include the permit number, permittee name, and the project start date.

4. **Install Erosion Controls** Before any soil is disturbed on the subject site, the permittee shall install erosion and sedimentation controls which are adequate to prevent erosion and sedimentation off-site. Such controls shall be maintained until the unpaved portions of subject site, if any, are stabilized by a self-sustaining cover of vegetation that is adequate to prevent erosion and sedimentation on and off such site. Before such controls are removed, the permittee shall remove all sediment that has accumulated at such controls.

5. **Clean Fill Only** All fill shall consist of clean soil, sand and/or gravel that is free of the following substances: asphalt, slag, flyash, broken concrete, demolition debris, garbage, household refuse, tires, woody materials including tree or landscape debris, and metal objects. The introduction of materials

toxic to aquatic life is expressly prohibited.

6. **No Equipment in the Water** Heavy equipment operation in the water is prohibited. With backhoes and similar heavy equipment, the bucket may enter the water.

7. **Seed, Mulch Disturbed Soils** All areas of soil disturbance resulting from this project (above the mean high water line) shall be seeded with an appropriate perennial grass seed and mulched with straw within one week of final grading.

8. **Precautions Against Contamination of Waters** All necessary precautions shall be taken to preclude contamination of any wetland or waterway by suspended solids, sediments, fuels, solvents, lubricants, epoxy coatings, paints, concrete, leachate or any other environmentally deleterious materials associated with the project.

9. **No Interference With Navigation** There shall be no unreasonable interference with navigation by the work herein authorized.

10. **State Not Liable for Damage** The State of New York shall in no case be liable for any damage or injury to the structure or work herein authorized which may be caused by or result from future operations undertaken by the State for the conservation or improvement of navigation, or for other purposes, and no claim or right to compensation shall accrue from any such damage.

11. **State May Require Site Restoration** If upon the expiration or revocation of this permit, the project hereby authorized has not been completed, the applicant shall, without expense to the State, and to such extent and in such time and manner as the Department of Environmental Conservation may lawfully require, remove all or any portion of the uncompleted structure or fill and restore the site to its former condition. No claim shall be made against the State of New York on account of any such removal or alteration.

12. **State May Order Removal or Alteration of Work** If future operations by the State of New York require an alteration in the position of the structure or work herein authorized, or if, in the opinion of the Department of Environmental Conservation it shall cause unreasonable obstruction to the free navigation of said waters or flood flows or endanger the health, safety or welfare of the people of the State, or cause loss or destruction of the natural resources of the State, the owner may be ordered by the Department to remove or alter the structural work, obstructions, or hazards caused thereby without expense to the State, and if, upon the expiration or revocation of this permit, the structure, fill, excavation, or other modification of the watercourse hereby authorized shall not be completed, the owners, shall, without expense to the State, and to such extent and in such time and manner as the Department of Environmental Conservation may require, remove all or any portion of the uncompleted structure or fill and restore to its former condition the navigable and flood capacity of the watercourse. No claim shall be made against the State of New York on account of any such removal or alteration.

GENERAL CONDITIONS - Apply to ALL Authorized Permits:

1. **Facility Inspection by The Department** The permitted site or facility, including relevant records, is subject to inspection at reasonable hours and intervals by an authorized representative of the

Department of Environmental Conservation (the Department) to determine whether the permittee is complying with this permit and the ECL. Such representative may order the work suspended pursuant to ECL 71- 0301 and SAPA 401(3).

The permittee shall provide a person to accompany the Department's representative during an inspection to the permit area when requested by the Department.

A copy of this permit, including all referenced maps, drawings and special conditions, must be available for inspection by the Department at all times at the project site or facility. Failure to produce a copy of the permit upon request by a Department representative is a violation of this permit.

2. Relationship of this Permit to Other Department Orders and Determinations Unless expressly provided for by the Department, issuance of this permit does not modify, supersede or rescind any order or determination previously issued by the Department or any of the terms, conditions or requirements contained in such order or determination.

3. Applications For Permit Renewals, Modifications or Transfers The permittee must submit a separate written application to the Department for permit renewal, modification or transfer of this permit. Such application must include any forms or supplemental information the Department requires. Any renewal, modification or transfer granted by the Department must be in writing. Submission of applications for permit renewal, modification or transfer are to be submitted to:

Regional Permit Administrator
NYSDEC Region 3 Headquarters
21 S Putt Corners Rd
New Paltz, NY12561

4. Submission of Renewal Application The permittee must submit a renewal application at least 30 days before permit expiration for the following permit authorizations: Excavation & Fill in Navigable Waters.

5. Permit Modifications, Suspensions and Revocations by the Department The Department reserves the right to exercise all available authority to modify, suspend or revoke this permit. The grounds for modification, suspension or revocation include:

a. materially false or inaccurate statements in the permit application or supporting papers;

b. failure by the permittee to comply with any terms or conditions of the permit;

c. exceeding the scope of the project as described in the permit application;

d. newly discovered material information or a material change in environmental conditions, relevant technology or applicable law or regulations since the issuance of the existing permit;

e. noncompliance with previously issued permit conditions, orders of the commissioner, any provisions of the Environmental Conservation Law or regulations of the Department related to the permitted activity.

6. Permit Transfer Permits are transferrable unless specifically prohibited by statute, regulation or

another permit condition. Applications for permit transfer should be submitted prior to actual transfer of ownership.

NOTIFICATION OF OTHER PERMITTEE OBLIGATIONS

Item A: Permittee Accepts Legal Responsibility and Agrees to Indemnification
The permittee, excepting state or federal agencies, expressly agrees to indemnify and hold harmless the Department of Environmental Conservation of the State of New York, its representatives, employees, and agents ("DEC") for all claims, suits, actions, and damages, to the extent attributable to the permittee's acts or omissions in connection with the permittee's undertaking of activities in connection with, or operation and maintenance of, the facility or facilities authorized by the permit whether in compliance or not in compliance with the terms and conditions of the permit. This indemnification does not extend to any claims, suits, actions, or damages to the extent attributable to DEC's own negligent or intentional acts or omissions, or to any claims, suits, or actions naming the DEC and arising under Article 78 of the New York Civil Practice Laws and Rules or any citizen suit or civil rights provision under federal or state laws.

Item B: Permittee's Contractors to Comply with Permit
The permittee is responsible for informing its independent contractors, employees, agents and assigns of their responsibility to comply with this permit, including all special conditions while acting as the permittee's agent with respect to the permitted activities, and such persons shall be subject to the same sanctions for violations of the Environmental Conservation Law as those prescribed for the permittee.

Item C: Permittee Responsible for Obtaining Other Required Permits
The permittee is responsible for obtaining any other permits, approvals, lands, easements and rights-of-way that may be required to carry out the activities that are authorized by this permit.

Item D: No Right to Trespass or Interfere with Riparian Rights
This permit does not convey to the permittee any right to trespass upon the lands or interfere with the riparian rights of others in order to perform the permitted work nor does it authorize the impairment of any rights, title, or interest in real or personal property held or vested in a person not a party to the permit.

Item E: SEQR Unlisted Action, No Significant Impact Under the State Environmental Quality Review Act (SEQR), the project associated with this permit is classified as an Unlisted Action with New Windsor Town Board designated as the lead agency. It has been determined that the project will not have a significant effect on the environment.

New York State

Department of Environmental Conservation

NOTICE

The Department of Environmental Conservation (DEC) has issued permit(s) pursuant to the Environmental Conservation Law for work being conducted at this site. For further information regarding the nature and extent of work approved and any Department condition on it, contact the DEC at 845-256-3054 or dep.r3@dec.ny.gov. Please refer to the permit number shown when contacting the DEC.

Permittee: Town of New Windsor

Permit No. 3-3348-00055/00019

Effective Date: 12/18/2023

Expiration Date: 12/31/2023

For Construction of a New Outfall in the Bed of the Moodna Creek at the WWTP

NOTE: This notice is **NOT** a permit.

EXHIBIT O

NYSDEC SPDES Discharge Permit

State Pollutant Discharge Elimination System (SPDES) DISCHARGE PERMIT

SIC Code:	**4952**	NAICS Code:	**221320**	SPDES Number:	**NY 002 2446**
Discharge Class (CL):	**05**			DEC Number:	**3-3348-00055**
Toxic Class (TX):	**T**			Effective Date (EDP):	**01/01/2024**
Major-Sub Drainage Basin:	**13 - 03**			Expiration Date (ExDP):	**12/31/2028**
Water Index Number:	**H-89**	Item No.:	**862 - 77**	Modification Dates (EDPM):	
Compact Area:	**-**				

This SPDES permit is issued in compliance with Title 8 of Article 17 of the Environmental Conservation Law of New York State and in compliance with the Clean Water Act, as amended, (33 U.S.C. '1251 et.seq.)

PERMITTEE NAME AND ADDRESS					
Name:	**Town of New Windsor**	Attention:	**Supervisor and Town Board**		
Street:	**555 Union Avenue**				
City:	**New Windsor**	State:	**NY**	Zip Code:	**12553**
Email:		Phone:			

is authorized to discharge from the facility described below:

FACILITY NAME, ADDRESS, AND PRIMARY OUTFALL															
Name:	**Caesars Lane Wastewater Treatment Facility**														
Address / Location:	**145 Caesars Lane**											County:	**Orange**		
City:	**New Windsor**						State:	**NY**				Zip Code:	**12553**		
Facility Location:		Latitude:	**41**	°	**27**	’	**39**	” N	& Longitude:	**74**	°	**01**	’	**35**	” W
Primary Outfall No.:	**001**	Latitude:	**41**	°	**27**	’	**36**	” N	& Longitude:	**74**	°	**01**	’	**35**	” W
Outfall Description:	**Treated Sanitary**	Receiving Water:	**Moodna Creek**						Class:	**C**		Standard:	**-**		

in accordance with: effluent limitations; monitoring and reporting requirements; other provisions and conditions set forth in this permit; and 6 NYCRR Part 750-1 and 750-2.

This permit and the authorization to discharge shall expire on midnight of the expiration date shown above and the permittee shall not discharge after the expiration date unless this permit has been renewed or extended pursuant to law. To be authorized to discharge beyond the expiration date, the permittee shall apply for permit renewal not less than 180 days prior to the expiration date shown above.

DISTRIBUTION:
Michael Weeks, McGoey, Hauser & Edsall Consulting
US EPA Region 2 NPDES Unit
Orange County Department of Health
NYSDEC R3 Regional Water Engineer
Kirsten Jedd-Barry, NYSDEC Div. of Water, Albany
NYS Environmental Facilities Corp

Permit Administrator:	Rebecca S. Crist		
Address:	21 South Putt Corners Road New Paltz, NY 12561		
Signature:	Rebecca S. Crist	Date:	12/18/2023

Contents

DEFINITIONS 3
PERMIT LIMITS, LEVELS AND MONITORING (During Construction) 4
PERMIT LIMITS, LEVELS AND MONITORING (Post Construction) 6
STORMWATER POLLUTION PREVENTION REQUIREMENTS 8
MERCURY MINIMIZATION PROGRAM (MMP) - Type I 9
MERCURY MINIMIZATION PROGRAM (MMP) - Type I (Continued) 10
MERCURY MINIMIZATION PROGRAM (MMP) - Type I (Continued) 11
DISCHARGE NOTIFICATION REQUIREMENTS 12
INDUSTRIAL PRETREATMENT PROGRAM IMPLEMENTATION REQUIREMENTS 13
SCHEDULE OF COMPLIANCE 16
MONITORING LOCATIONS – During Construction 17
MONITORING LOCATIONS – Post Construction 18
GENERAL REQUIREMENTS 19
RECORDING, REPORTING AND ADDITIONAL MONITORING REQUIREMENTS 21
E. Schedule of Additional Submittals: 21

DEFINITIONS

TERM	DEFINITION
7-Day Geo Mean	The highest allowable geometric mean of daily discharges over a calendar week.
7-Day Average	The average of all daily discharges for each 7-days in the monitoring period. The sample measurement is the highest of the 7-day averages calculated for the monitoring period.
12-Month Rolling Average (12 MRA)	The current monthly value of a parameter, plus the sum of the monthly values over the previous 11 months for that parameter, divided by the number of months for which samples were collected in the 12-month period.
30-Day Geometric Mean	The highest allowable geometric mean of daily discharges over a calendar month, calculated as the antilog of: the sum of the log of each of the daily discharges measured during a calendar month divided by the number of daily discharges measured during that month.
Action Level	Action level means a monitoring requirement characterized by a numerical value that, when exceeded, triggers additional permittee actions and department review to determine if numerical effluent limitations should be imposed.
Compliance Level / Minimum Level	A compliance level is an effluent limitation. A compliance level is given when the water quality evaluation specifies a Water Quality Based Effluent Limit (WQBEL) below the Minimum Level. The compliance level shall be set at the Minimum Level (ML) for the most sensitive analytical method as given in 40 CFR Part 136, or otherwise accepted by the Department.
Daily Discharge	The discharge of a pollutant measured during a calendar day or any 24-hour period that reasonably represents the calendar day for the purposes of sampling. For pollutants expressed in units of mass, the 'daily discharge' is calculated as the total mass of the pollutant discharged over the day. For pollutants with limitations expressed in other units of measurement, the 'daily discharge' is calculated as the average measurement of the pollutant over the day.
Daily Maximum	The highest allowable Daily Discharge.
Daily Minimum	The lowest allowable Daily Discharge.
Effective Date of Permit (EDP or EDPM)	The date this permit is in effect.
Effluent Limitations	Effluent limitation means any restriction on quantities, quality, rates and concentrations of chemical, physical, biological, and other constituents of effluents that are discharged into waters of the state.
Expiration Date of Permit (ExDP)	The date this permit is no longer in effect.
Instantaneous Maximum	The maximum level that may not be exceeded at any instant in time.
Instantaneous Minimum	The minimum level that must be maintained at all instants in time.
Monthly Average	The highest allowable average of daily discharges over a calendar month, calculated as the sum of each of the daily discharges measured during a calendar month divided by the number of daily discharges measured during that month.
Outfall	The terminus of a sewer system, or the point of emergence of any waterborne sewage, industrial waste or other wastes or the effluent therefrom, into the waters of the State.
Range	The minimum and maximum instantaneous measurements for the reporting period must remain between the two values shown.
Receiving Water	The classified waters of the state to which the listed outfall discharges.
Sample Frequency / Sample Type / Units	See NYSDEC's "DMR Manual for Completing the Discharge Monitoring Report for the SPDES" for information on sample frequency, type and units.

PERMIT LIMITS, LEVELS AND MONITORING (During Construction)

OUTFALL	LIMITATIONS APPLY	RECEIVING WATER	EFFECTIVE	EXPIRING
001	All Year (except where noted)	Moodna Creek	EDP	Upon Construction Completion + 60 Days

PARAMETER	EFFLUENT LIMITATION					MONITORING REQUIREMENTS				FN
	Type	Limit	Units	Limit	Units	Sample Frequency	Sample Type	Location		
								Inf.	Eff.	
Flow	Monthly Average	5.0	MGD			Continuous	Recorder		X	
	Daily Maximum	Monitor	MGD			Continuous	Recorder		X	
BOD_5	Monthly Average	30	mg/L	1300	lbs/d	1/Week	24-hr. Comp.	X	X	1
	7-Day Average	45	mg/L	1900	lbs/d	1/Week	24-hr. Comp.		X	
Total Suspended Solids (TSS)	Monthly Average	30	mg/L	1300	lbs/d	1/Week	24-hr. Comp.	X	X	1
	7-Day Average	45	mg/L	1900	lbs/d	1/Week	24-hr. Comp.		X	
Settleable Solids	Daily Maximum	0.3	mL/L			2/Day	Grab		X	
pH	Daily Minimum	6.0	SU			2/Day	Grab		X	
	Daily Maximum	9.0	SU			2/Day	Grab		X	
Ammonia (as N) June 1 – Sept. 30	Monthly Average	14	mg/L			1/Week	24-hr. Comp.		X	
Ammonia (as N) Oct. 1 – May 31	Monthly Average	20	mg/L			1/Week	24-hr. Comp.		X	
Temperature	Monthly Average	Monitor	ºC			2/Day	Grab		X	
	Daily Maximum	Monitor	ºC			2/Day	Grab		X	
Dissolved Oxygen	Daily Minimum	Monitor	mg/L			2/Day	Grab		X	
Total Lead	Daily Maximum	44	µg/L			1/Month	24-hr. Comp.		X	
Total Mercury	Daily Maximum	50	ng/L			Quarterly	Grab		X	
Bis(2-ethylhexyl) phthalate	Daily Maximum	7.5	µg/L			1/Month	24-hr. Comp.		X	2
Total Unchlorinated Phenols	Monthly Average	55	µg/L			1/Month	24-hr. Comp.		X	2
ACTION LEVEL PARAMETERS	Type	Action Level	Units	Action Level	Units	Sample Frequency	Sample Type	Inf.	Eff.	FN
Total Copper	Daily Maximum	Monitor	µg/L	3.6	lbs/d	Quarterly	Grab		X	

EFFLUENT DISINFECTION Required Seasonal from May 1st - October 31st		Limit	Units	Limit	Units	Sample Frequency	Sample Type	Inf.	Eff.	FN
Coliform, Fecal	30-Day Geometric Mean	200	No./ 100 mL			1/Week	Grab		X	
Coliform, Fecal	7-Day Geometric Mean	400	No./ 100 mL			1/Week	Grab		X	
Chlorine, Total Residual	Daily Maximum	55	µg/L	Monitor	lbs/d	2/Day	Grab		X	3

WHOLE EFFLUENT TOXICITY (WET) TESTING		Limit	Units	Action Level	Units	Sample Frequency	Sample Type	Inf.	Eff.	FN
WET - Acute Invertebrate	See footnote			1.8	TUa	Quarterly	See footnote		X	4
WET - Acute Vertebrate	See footnote			1.8	TUa	Quarterly	See footnote		X	4
WET - Chronic Invertebrate	See footnote			11	TUc	Quarterly	See footnote		X	4
WET - Chronic Vertebrate	See footnote			11	TUc	Quarterly	See footnote		X	4

FOOTNOTES:

1. Effluent shall not exceed 30% and 20% of influent concentration values for BOD_5 & TSS respectively.
2. Composite samples shall be collected in accordance with 6 NYCRR 750-2.5(a)(2)(iii).
3. Sampling and reporting for total residual chlorine are only necessary if chlorine is used for disinfection, elsewhere in the treatment process, or the facility otherwise has reasonable potential to discharge chlorine. Otherwise, the permittee shall report NODI-9 on the DMR.
4. **Whole Effluent Toxicity (WET) Testing:**

   Testing Requirements – Chronic WET testing is required, but report both the acute and chronic results. Testing shall be performed in accordance with 40 CFR Part 136 and TOGS 1.3.2 unless prior written approval has been obtained from the Department. The test species shall be Ceriodaphnia dubia (water flea - invertebrate) and Pimephales promelas (fathead minnow - vertebrate). Receiving water collected upstream from the discharge should be used for dilution. All tests conducted should be static-renewal (two 24-hr composite samples with one renewal for Acute tests and three 24-hr composite samples with two renewals for Chronic tests). The appropriate dilution series should be used to generate a definitive test endpoint, otherwise an immediate rerun of the test may be required. WET testing shall be coordinated with the monitoring of chemical and physical parameters limited by this permit so that the resulting analyses are also representative of the sample used for WET testing. The ratio of critical receiving water flow to discharge flow (i.e. dilution ratio) is 6:1 for acute, and 11:1 for chronic. Discharges which are disinfected using chlorine should be dechlorinated prior to WET testing or samples shall be taken immediately prior to the chlorination system.

   Monitoring Period - WET testing shall be performed quarterly (calendar quarters) during calendar years ending in **4** and **9**.

   Reporting - Toxicity Units shall be calculated and reported on the DMR as follows: TUa = (100)/(48-hr LC50) [note that Acute data is generated by both Acute and Chronic testing] and TUc = (100)/(7-day NOEC) or (100)/(7-day IC25) when Chronic testing has been performed or TUc = (TUa) x (10) when only Acute testing has been performed and is used to predict Chronic test results, where the 48-hr LC50, 7-day NOEC and/or IC25 are all expressed in % effluent. This must be done, including the Chronic prediction from the Acute data, for both species unless otherwise directed. For Chronic results, report the most sensitive endpoint (i.e. survival, growth and/or reproduction) corresponding to the lowest 7-day NOEC or IC25 and resulting highest TUc. For Acute results, report a TUa of 0.3 if there is no statistically significant mortality in 100% effluent as compared to the control. Report a TUa of 1.0 if there is statistically significant mortality in 100% effluent as compared to the control, but insufficient mortality to generate a 48-hr LC50. Also, in the absence of a 48-hr LC50, use 1.0 TUa for the Chronic prediction from the Acute data, and report a TUc of 10.0.

   The complete test report including all bench sheets, statistical analyses, reference toxicity data, daily average flow at the time of sampling and other appropriate supporting documentation, shall be submitted within 60 days following the end of each test period with your WET DMR and to the WET@dec.ny.gov email address. A summary page of the test results for the invertebrate and vertebrate species indicating TUa, 48-hr LC50 for Acute tests and/or TUc, NOEC, IC25, and most sensitive endpoints for Chronic tests, should also be included at the beginning of the test report.

   WET Testing Action Level Exceedances - If an action level is exceeded then the Department may require the permittee to conduct additional WET testing including Acute and/or Chronic tests. Additionally, the permittee may be required to perform a Toxicity Identification/Reduction Evaluation (TI/RE) in accordance with Department guidance. Enforceable WET limits may also apply. The permittee shall be notified in writing by their Regional DEC office of additional requirements. The written notification shall include the reason(s) why such testing, TI/RE and/or limits are required.

PERMIT LIMITS, LEVELS AND MONITORING (Post Construction)

OUTFALL	LIMITATIONS APPLY	RECEIVING WATER	EFFECTIVE	EXPIRING
001	All Year (except where noted)	Moodna Creek	Upon Construction Completion + 60 Days	ExDP

PARAMETER	EFFLUENT LIMITATION					MONITORING REQUIREMENTS				FN
	Type	Limit	Units	Limit	Units	Sample Frequency	Sample Type	Location		
								Inf.	Eff.	
Flow	Monthly Average	8.0	MGD			Continuous	Recorder		X	
	Daily Maximum	Monitor	MGD			Continuous	Recorder		X	
pH	Range	6.5-8.5	SU			3/Day	Grab		X	
Temperature	Monthly Average	Monitor	ºC			3/Day	Grab		X	
	Daily Maximum	Monitor	ºC			3/Day	Grab		X	
Dissolved Oxygen	Daily Minimum	4.0	mg/L			2/Week	Grab		X	
BOD_5	7-Day Average	20	mg/L	1300	lbs/d	2/Week	24-hr. Comp.	X	X	1
Total Suspended Solids (TSS)	7-Day Average	10	mg/L	670	lbs/d	2/Week	24-hr. Comp.	X	X	1
Settleable Solids	Daily Maximum	0.1	mL/L			3/Day	Grab		X	
Ammonia (as N) June 1 - Oct. 31	Monthly Average	1.2	mg/L	82	lbs/d	2/Week	24-hr. Comp.		X	
Ammonia (as N) Nov. 1 – May 31	Monthly Average	1.9	mg/L	120	lbs/d	2/Week	24-hr. Comp.		X	
Total Mercury	12 MRA	16	ng/L			Quarterly	Calculated	X	X	6,9
	Daily Maximum	50	ng/L			Quarterly	Grab	X	X	9
Total Lead	Daily Maximum	13	µg/L			1/Month	24-hr. Comp.		X	
Total Copper	Daily Maximum	21	µg/L			1/Month	24-hr. Comp.		X	
Bis(2-ethylhexyl) phthalate	Daily Maximum	7.5	µg/L			1/Month	24-hr. Comp.		X	5,10
Phenolic Compounds (total phenols)	Monthly Average	5.0	µg/L			1/Month	24-hr. Comp.		X	7,8
Biennial Pollutant Scan						1/Two Years	-		X	2

EFFLUENT DISINFECTION Required Seasonal from May 1st - October 31st		Limit	Units	Limit	Units	Sample Frequency	Sample Type	Inf.	Eff.	FN
Coliform, Fecal	30-Day Geometric Mean	200	No./ 100 mL			1/Week	Grab		X	
Coliform, Fecal	7-Day Geometric Mean	400	No./ 100 mL			1/Week	Grab		X	
Chlorine, Total Residual	Daily Maximum	0.03	mg/L			2/Day	Grab		X	3,4

WHOLE EFFLUENT TOXICITY (WET) TESTING		Limit	Units	Action Level	Units	Sample Frequency	Sample Type	Inf.	Eff.	FN
WET - Acute Invertebrate	See footnote			0.3	TUa	Quarterly	See footnote		X	9,11
WET - Acute Vertebrate	See footnote			0.3	TUa	Quarterly	See footnote		X	9,11
WET - Chronic Invertebrate	See footnote			1.0	TUc	Quarterly	See footnote		X	9,11
WET - Chronic Vertebrate	See footnote			1.0	TUc	Quarterly	See footnote		X	9,11

FOOTNOTES:

1. Effluent shall not exceed 15% of influent concentration values for BOD_5 & TSS.

2. Biennial Pollutant Scan: The permittee shall perform effluent sampling every two (2) years for all applicable pollutants identified in the NY-2A Application, Tables A - D. Sampling data shall be collected according to the guidance in the NY-2A application and maintained by the permittee. Monitoring results shall not be submitted on the DMR. Data shall be submitted with the next submission of the NY-2A form.

3. Sampling and reporting for total residual chlorine are only necessary if chlorine is used for disinfection, elsewhere in the treatment process, or the facility otherwise has reasonable potential to discharge chlorine. Otherwise, the permittee shall report NODI-9 on the DMR.

4. This is a Compliance Level. The calculated WQBEL is 0.005 mg/L.

5. This is a Compliance Level. The calculated WQBEL is 0.6 µg/L.

6. The 12-month rolling average for total mercury is defined as the sum of the current month's monthly average concentration added to the quarterly averages from the eleven previous months, divided by the number of months for which samples were collected in the 12-month period.

7. At least 4 individual manual grab samples must be collected over the course of 24 hours analyzed separately, and the concentrations averaged. Alternatively, grab samples may be collected in the field and composited in the laboratory and analyzed as a single sample if the results are equivalent to the arithmetic averaging of individual grab samples. Where effluent flows do not vary more than 10 percent over the course of composite sample collection, composite samples may be composed of equal size grab samples taken at equal time intervals. Where effluent flows do vary more than 10 percent over the course of sample collection, composite samples must be flow proportioned.

8. Total phenols shall be determined by colorimetric or spectrophotometric analysis using the most sufficiently sensitive method approved under 40 CFR Part 136 for total recoverable phenols.

9. Quarterly samples shall be collected in calendar quarters (Q1 – January 1st to March 31st; Q2 – April 1st to June 30th; Q3 – July 1st to September 30th; Q4 – October 1st to December 31st).

10. The permittee may develop and submit a sampling plan for approval for bis(2-ethylhexyl) phthalate sampling to determine if detections of bis(2-ethylhexyl) phthalate are from a source within the collection system, or from laboratory contamination. If the bis(2-ethylhexyl) phthalate is detected in the effluent in excess of the permit effluent limitation, the permittee shall initiate a track down of potential sources through an inventory of industrial users and associated sampling of the industrial users. The permittee shall ensure that proper sampling and analytical protocols for bis(2-ethylhexyl) phthalate are used, and that the data is validated in order to reduce the possibility of equipment contaminating samples. If it can be determined that the source of the bis(2-ethylhexyl) phthalate is from laboratory contamination, the permittee may apply for a permit modification to remove the bis(2-ethylhexyl) phthalate limit.

11. **Whole Effluent Toxicity (WET) Testing:**
Testing Requirements – Chronic WET testing is required, but report both the acute and chronic results. Testing shall be performed in accordance with 40 CFR Part 136 and TOGS 1.3.2 unless prior written approval has been obtained from the Department. The test species shall be Ceriodaphnia dubia (water flea - invertebrate) and Pimephales promelas (fathead minnow - vertebrate). Receiving water collected upstream from the discharge should be used for dilution. All tests conducted should be static-renewal (two 24-hr composite samples with one renewal

for Acute tests and three 24-hr composite samples with two renewals for Chronic tests). The appropriate dilution series should be used to generate a definitive test endpoint, otherwise an immediate rerun of the test may be required. WET testing shall be coordinated with the monitoring of chemical and physical parameters limited by this permit so that the resulting analyses are also representative of the sample used for WET testing. The ratio of critical receiving water flow to discharge flow (i.e. dilution ratio) is 1:1 for acute, and 1:1 for chronic. Discharges which are disinfected using chlorine should be dechlorinated prior to WET testing or samples shall be taken immediately prior to the chlorination system.

Monitoring Period - WET testing shall be performed quarterly (calendar quarters) during calendar years ending in **4** and **9**.

Reporting - Toxicity Units shall be calculated and reported on the DMR as follows: TUa = (100)/(48-hr LC50) [note that Acute data is generated by both Acute and Chronic testing] and TUc = (100)/(7-day NOEC) or (100)/(7-day IC25) when Chronic testing has been performed or TUc = (TUa) x (10) when only Acute testing has been performed and is used to predict Chronic test results, where the 48-hr LC50, 7-day NOEC and/or IC25 are all expressed in % effluent. This must be done, including the Chronic prediction from the Acute data, for both species unless otherwise directed. For Chronic results, report the most sensitive endpoint (i.e. survival, growth and/or reproduction) corresponding to the lowest 7-day NOEC or IC25 and resulting highest TUc. For Acute results, report a TUa of 0.3 if there is no statistically significant mortality in 100% effluent as compared to the control. Report a TUa of 1.0 if there is statistically significant mortality in 100% effluent as compared to the control, but insufficient mortality to generate a 48-hr LC50. Also, in the absence of a 48-hr LC50, use 1.0 TUa for the Chronic prediction from the Acute data, and report a TUc of 10.0.

The complete test report including all bench sheets, statistical analyses, reference toxicity data, daily average flow at the time of sampling and other appropriate supporting documentation, shall be submitted within 60 days following the end of each test period with your WET DMR and to the WET@dec.ny.gov email address. A summary page of the test results for the invertebrate and vertebrate species indicating TUa, 48-hr LC50 for Acute tests and/or TUc, NOEC, IC25, and most sensitive endpoints for Chronic tests, should also be included at the beginning of the test report.

WET Testing Action Level Exceedances - If an action level is exceeded then the Department may require the permittee to conduct additional WET testing including Acute and/or Chronic tests. Additionally, the permittee may be required to perform a Toxicity Identification/Reduction Evaluation (TI/RE) in accordance with Department guidance. Enforceable WET limits may also apply. The permittee shall be notified in writing by their Regional DEC office of additional requirements. The written notification shall include the reason(s) why such testing, TI/RE and/or limits are required.

STORMWATER POLLUTION PREVENTION REQUIREMENTS

NO EXPOSURE CERTIFICATION

The permittee submitted a Conditional Exclusion for No Exposure Form on June 30, 2023, certifying that all industrial activities and materials are completely sheltered from exposure to rain, snow, snowmelt, and/or stormwater runoff. The permittee must maintain a condition of no exposure for the exclusion to remain applicable. If conditions change resulting in the exposure of materials and activities to stormwater, the permittee must notify the Regional Water Engineer. The permittee must recertify a condition of no exposure every five years by completing the “No Exposure Certification Form” found on the NYSDEC website.

MERCURY MINIMIZATION PROGRAM (MMP) - Type I

1. General - The permittee must develop, implement, and maintain a mercury minimization program (MMP), containing the elements set forth below, to reduce mercury effluent levels with the goal of achieving the WQBEL of 0.7 ng/L.

2. MMP Elements - The MMP must be a written document and must include any necessary drawings or maps of the facility and/or collection system. Other related documents already prepared for the facility may be used as part of the MMP and may be incorporated by reference. At a minimum, the MMP must include the following elements as described in detail below:

   a. Monitoring - Monitoring at Outfall 001, influent and other locations tributary to compliance points shall be performed using either USEPA Method 1631 or another sufficiently sensitive method, as approved under 40 CFR Part 136[1]. Monitoring of raw materials, equipment, treatment residuals, and other non-wastewater/non-stormwater substances may be performed using other methods as appropriate. Monitoring must be coordinated so that the results can be effectively compared between locations.

      Minimum required monitoring is as follows:

      i. Sewage Treatment Plant Influent and/or Effluent – The permittee must collect samples at the location(s) and frequency as specified in the SPDES permit limitations table.

      ii. *Key Locations* and *Potential Mercury Sources* – The permittee must sample *key locations*, chosen to identify *potential mercury sources*, at least semi-annually. Sampling of discharges from dental facilities in compliance with 6 NYCRR 374.4 is not required.

      iii. Hauled Wastes – The permittee must establish procedures for the acceptance of hauled waste to ensure the hauled waste is not a potential mercury source. Loads which may exceed 500 ng/L,[2] must receive approval from the Department prior to acceptance.

      iv. Decreased Monitoring Requirements - Facilities with EEQ at or below 12 ng/L are eligible for the following:
         1) Reduced requirements, through a permittee-initiated permit modification
            a) Conduct influent monitoring, sampling quarterly, in lieu of monitoring within the collection system, such as at *key locations*; and
            b) Conduct effluent compliance sampling quarterly.
         2) If a facility with reduced requirements reports discharges above 12 ng/L for two of four consecutive effluent samples, the Department may undertake a Department-initiated modification to remove the allowance of reduced requirements.
         3) Under the decreased permit requirements, the facility must continue to conduct a status report, as applicable in accordance with 2.c of this MMP, to determine if any waste streams have changed.

      v. Additional monitoring must be completed as required elsewhere in this permit (e.g., locations tributary to compliance points).

   b. Control Strategy - The control strategy must contain the following minimum elements:

      i. Pretreatment/Sewer Use Law - The permittee must review pretreatment program requirements and the Sewer Use Law (SUL) to ensure it is up-to-date and enforceable with applicable permit requirements and will support efforts to achieve a dissolved mercury concentration of 0.70 ng/L in the effluent.

      ii. Monitoring and Inventory/Inspections for Outfall 001 -
         1) Monitoring shall be performed as described in 2.a above. As mercury sources are found, the permittee must enforce its sewer use law to track down and minimize these sources.
         2) The permittee must inventory and/or inspect users of its system as necessary to support the MMP.
            a) Dental Facilities
               1. The permittee must maintain an inventory of each dental facility.

[1] Outfall monitoring must be conducted using the methods specified in Table 8 of *DOW 1.3.10.*
[2] A level of 0.2 mg/L (200,000 ng/L) or more is considered hazardous per 40 CFR Part 261.11. 500 ng/L is used here to alert the permittee that there is an unusual concentration of mercury and that it will need to be managed appropriately.

MERCURY MINIMIZATION PROGRAM (MMP) - Type I (Continued)

2. The permittee must inspect each dental facility at least once every five years to verify compliance with the wastewater treatment operation, maintenance, and notification elements of 6 NYCRR 374.4. Alternatively, the permittee may develop and implement an outreach program,[3] which informs users of their responsibilities, and collect the "Amalgam Waste Compliance Report for Dental Dischargers"[4] form, as needed, to satisfy the inspection requirements. The permittee must conduct the outreach program at least once every five years and ensure the "Amalgam Waste Compliance Report for Dental Dischargers" are submitted by new users, as necessary. The outreach program could be supported by a subset of site inspections.
3. A file shall be maintained containing documentation demonstrating compliance with 2.b.ii.2)a) above. This file shall be available for review by the Department representatives and copies shall be provided upon request.

b) Other *potential mercury sources*
1. The permittee must maintain an inventory of other *potential mercury sources.*
2. The permittee must inspect other *potential mercury sources* once every five years. Alternatively, the permittee may develop and implement an outreach program which informs users of their responsibilities as *potential mercury sources.* The permittee must conduct the outreach program at least once every five years. The outreach program should be supported by a subset of site inspections.
3. A file shall be maintained containing documentation demonstrating compliance with 2.b.ii.2)b) above. This file shall be available for review by the Department representatives and copies shall be provided upon request.

iii. Systems with CSO & Type II SSO Outfalls – Permittees must prioritize *potential mercury sources* upstream of CSOs and Type II SSOs for mercury reduction activities and/or controlled-release discharge.

iv. Equipment and Materials – Equipment and materials (e.g., thermometers, thermostats) used by the permittee, which may contain mercury, must be evaluated by the permittee. As equipment and materials containing mercury are updated/replaced, the permittee must use mercury-free alternatives, if possible.

v. Bulk Chemical Evaluation – For chemicals, used at a rate which exceeds 1,000 gallons/year or 10,000 pounds/year, the permittee must obtain a manufacturer's certificate of analysis, a chemical analysis performed by a certified laboratory, and/or a notarized affidavit which describes the substances' mercury concentration and the detection limit achieved. If possible, the permittee must only use bulk chemicals utilized in the wastewater treatment process which contain <10 ppb mercury.

c. **Status Report - An annual** status report must be developed and maintained on site, in accordance with the Schedule of Additional Submittals, summarizing:

i. All MMP monitoring results for Outfall 001 for the previous reporting period;

ii. A list of known and *potential mercury sources* for Outfall 001
1) If the permittee meets the criteria for MMP Type IV, the permittee must notify the Department for a permittee-initiated modification;

iii. All actions undertaken, pursuant to the control strategy, during the previous reporting period;

iv. Actions planned, pursuant to the control strategy, for the upcoming reporting period; and

v. Progress towards achieving a dissolved mercury concentration of 0.70 ng/L in the effluent (e.g., summarizing reductions in effluent concentrations as a result of the control strategy implementation and/or installation/modification of a treatment system).

The permittee must maintain a file with all MMP documentation. The file must be available for review by Department representatives and copies must be provided upon request in accordance with 6 NYCRR 750-2.1(i) and 750-2.5(c)(4).

[3] For example, the outreach program could include education about sources of mercury and what to do if a mercury source is found.
[4] The form, "Amalgam Waste Compliance Report for Dental Dischargers," can be found here: https://www.dec.ny.gov/docs/water_pdf/dentalform.pdf

MERCURY MINIMIZATION PROGRAM (MMP) - Type I (Continued)

3. MMP Modification - The MMP must be modified whenever:
   a. Changes at the facility, or within the collection system, increase the potential for mercury discharges;
   b. Effluent discharges exceed the current permit limitation(s); or
   c. A letter from the Department identifies inadequacies in the MMP.

   The Department may use information in the status reports, as applicable in accordance with 2.c of this MMP, to determine if the permit limitations and MMP Type is appropriate for the facility.

DEFINITIONS:

Key location – a location within the collection/wastewater system (e.g. including but not limited to a specific manhole/access point, tributary sewer/wastewater connection, or user discharge point) identified by the permittee as a potential mercury source. The permittee may adjust key locations based upon sampling and/or best professional judgement.

Potential mercury source – a source identified by the permittee that may reasonably be expected to have total mercury contained in the discharge. Some potential mercury sources include switches, fluorescent lightbulbs, cleaners, degreasers, thermometers, batteries, hauled wastes, universities, hospitals, laboratories, landfills, Brownfield sites, or raw material storage.

DISCHARGE NOTIFICATION REQUIREMENTS

(a) The permittee shall install and maintain identification signs at all outfalls to surface waters listed in this permit, unless the Permittee has obtained a waiver in accordance with the Discharge Notification Act (DNA). Such signs shall be installed before initiation of any new discharge location.

(b) Subsequent modifications to or renewal of this permit does not reset or revise the deadline set forth in (a) above, unless a new deadline is set explicitly by such permit modification or renewal.

(c) The Discharge Notification Requirements described herein do not apply to outfalls from which the discharge is composed exclusively of storm water, or discharges to ground water.

(d) The sign(s) shall be conspicuous, legible and in as close proximity to the point of discharge as is reasonably possible while ensuring the maximum visibility from the surface water and shore. The signs shall be installed in such a manner to pose minimal hazard to navigation, bathing or other water related activities. If the public has access to the water from the land in the vicinity of the outfall, an identical sign shall be posted to be visible from the direction approaching the surface water.

The signs shall have **minimum** dimensions of eighteen inches by twenty-four inches (18" x 24") and shall have white letters on a green background and contain the following information:

N.Y.S. PERMITTED DISCHARGE POINT

SPDES PERMIT No.: NY_____

OUTFALL No. :____

For information about this permitted discharge contact:

Permittee Name: _____

Permittee Contact: _____

Permittee Phone: ( ) - ### - ####

OR:

NYSDEC Division of Water Regional Office Address:

NYSDEC Division of Water Regional Phone: ( ) - ### - ####

(e) Upon request, the permittee shall make available electronic or hard copies of the sampling data to the public. In accordance with the RECORDING, REPORTING AND ADDITIONAL MONITORING REQUIREMENTS page of your permit, each DMR shall be maintained (either electronically or as a hard copy) on record for a period of five years.

(f) The permittee shall periodically inspect the outfall identification sign(s) in order to ensure they are maintained, are still visible, and contain information that is current and factually correct. Signs that are damaged or incorrect shall be replaced within 3 months of inspection.

INDUSTRIAL PRETREATMENT PROGRAM IMPLEMENTATION REQUIREMENTS

A. DEFINITIONS: Generally, terms used in this Section shall be defined as in the General Pretreatment Regulations (40 CFR Part 403). Specifically, the following definitions apply to terms used in this Section:

1. Categorical Industrial User (CIU): an industrial user of the POTW that is subject to Categorical Pretreatment Standards under 40 CFR 403.6 and 40 CFR Chapter I, Subchapter N;

2. Local Limits: General Prohibitions, specific prohibitions and specific limits as set forth in 40 CFR 403.5.

3. The Publicly Owned Treatment Works (POTW): as defined by 40 CFR 403.3(q) and that discharges in accordance with this permit.

4. Program Submission(s): requests for approval or modification of the POTW Pretreatment Program submitted in accordance with 40 CFR 403.11 or 403.18 and approved by USEPA on **September 4, 1995**.

5. Significant Industrial User (SIU):
   a) CIUs;
   b) Except as provided in 40 CFR 403.3(v)(3), any other industrial user that discharges an average of 25,000 gallons per day or more of process wastewater (excluding sanitary, non-contact cooling and boiler blowdown wastewater) to the POTW;
   c) Except as provided in 40 CFR 403.3(v)(3), any other industrial user that contributes a process waste stream which makes up 5 percent or more of the average dry weather hydraulic or organic capacity of the POTW treatment plant;
   d) Any other industrial user that the permittee designates as having a reasonable potential for adversely affecting the POTW's operation or for violating a pretreatment standard or requirement.

6. Substances of Concern: Substances identified by the New York State Department of Environmental Conservation Industrial Chemical Survey as substances of concern.

B. IMPLEMENTATION: The permittee shall implement a POTW Pretreatment Program in accordance 40 CFR Part 403 and as set forth in the permittee's approved Program Submission(s). Modifications to this program shall be made in accordance with 40 CFR 403.18. Specific program requirements are as follows:

1. Industrial Survey: To maintain an updated inventory of industrial dischargers to the POTW the permittee shall:
   a) Identify, locate and list all industrial users who might be subject to the industrial pretreatment program from the pretreatment program submission and any other necessary, appropriate and available sources. This identification and location list will be updated, at a minimum, every five years. As part of this update the permittee shall collect a current and complete New York State Industrial Chemical Survey form (or equivalent) from each SIU.
   b) Identify the character and volume of pollutants contributed to the POTW by each industrial user identified in B.1.a above that is classified as a SIU.
   c) Identify, locate and list, from the pretreatment program submission and any other necessary, appropriate and available sources, all SIUs of the POTW.

2. Control Mechanisms: To provide adequate notice to and control of industrial users of the POTW the permittee shall:
   a) Inform by certified letter, hand delivery courier, overnight mail, or other means which will provide written acknowledgment of delivery, all industrial users identified in B.1.a. above of applicable pretreatment standards and requirements including the requirement to comply with the local sewer use law, regulation or ordinance and any applicable requirements under section 204(b) and 405 of the Federal Clean Water Act and Subtitles C and D of the Resource Conservation and Recovery Act.

INDUSTRIAL PRETREATMENT PROGRAM IMPLEMENTATION REQUIREMENTS (continued)

b) Control through permit or similar means the contribution to the POTW by each SIU to ensure compliance with applicable pretreatment standards and requirements. Permits shall contain limitations, sampling frequency and type, reporting and self-monitoring requirements as described below, requirements that limitations and conditions be complied with by established deadlines, an expiration date not later than five years from the date of permit issuance, a statement of applicable civil and criminal penalties and the requirement to comply with Local Limits and any other requirements in accordance with 40 CFR 403.8(f)(1).

3. Monitoring and Inspection: To provide adequate, ongoing characterization of non-domestic users of the POTW, the permittee shall:
   a) Receive and analyze self-monitoring reports and other notices. The permittee shall require all SIUs to submit self-monitoring reports at least every six months unless the permittee collects all such information required for the report, including flow data.
   b) The permittee shall adequately inspect each SIU at a minimum frequency of once per year.
   c) The permittee shall collect and analyze samples from each SIU for all priority pollutants that can reasonably be expected to be detectable at levels greater than the levels found in domestic sewage at a minimum frequency of once per year.
   d) Require, through permits, each SIU to collect at least one 24 hour, flow proportioned composite (where feasible) effluent sample every six months and analyze each of those samples for all priority pollutants that can reasonably be expected to be detectable in that discharge at levels greater than the levels found in domestic sewage. The permittee may perform the aforementioned monitoring in lieu of the SIU except that the permittee must also perform the compliance monitoring described in 3.c.

4. Enforcement: To assure adequate, equitable enforcement of the industrial pretreatment program the permittee shall:
   a) Investigate instances of noncompliance with pretreatment standards and requirements, as indicated in self-monitoring reports and notices or indicated by analysis, inspection and surveillance activities. Sample taking and analysis and the collection of other information shall be performed with sufficient care to produce evidence admissible in enforcement proceedings or in judicial actions. Enforcement activities shall be conducted in accordance with the permittee's Enforcement Response Plan developed and approved in accordance with 40 CFR Part 403.
   b) Enforce compliance with all national pretreatment standards and requirements in 40 CFR Parts 406 - 471.
   c) Provide public notification of significant non-compliance as required by 40 CFR 403.8(f)(2)(viii).
   d) Pursuant to 40 CFR 403.5(e), when either the Department or the USEPA determines any source contributes pollutants to the POTW in violation of Pretreatment Standards or Requirements the Department or the USEPA shall notify the permittee. Failure by the permittee to commence an appropriate investigation and subsequent enforcement action within 30 days of this notification may result in appropriate enforcement action against the source and permittee.

5. Recordkeeping: The permittee shall maintain and update, as necessary, records identifying the nature, character, and volume of pollutants contributed by SIUs. Records shall be maintained in accordance with 6 NYCRR 750-2.5(c).

6. Staffing: The permittee shall maintain minimum staffing positions committed to implementation of the Industrial Pretreatment Program in accordance with the approved pretreatment program.

C. SLUDGE DISPOSAL PLAN. The permittee shall notify NYSDEC, and USEPA as long as USEPA remains the approval authority, 60 days prior to any major proposed change in the sludge disposal plan. NYSDEC may require additional pretreatment measures or controls to prevent or abate an interference incident relating to sludge use or disposal.

INDUSTRIAL PRETREATMENT PROGRAM IMPLEMENTATION REQUIREMENTS (continued)

D. REPORTING: The permittee shall provide to the offices listed on the Monitoring, Reporting and Recording page of this permit and to the Chief-Water Compliance Branch, USEPA Region II, 290 Broadway, New York, NY 10007, a periodic report that briefly describes the permittee's program activities over the previous year. This report shall be submitted in accordance with the Schedule of Submittals to the above noted offices within 60 days of the end of the reporting period. The periodic report shall include:

1. Industrial Survey: Updated industrial survey information in accordance with 40 CFR 403.12(i)(1) (including any NYS Industrial Chemical Survey forms updated during the reporting period).

2. Implementation Status: Status of Program Implementation, to include:
   a) Any interference, upset or permit violations experienced at the POTW directly attributable to industrial users.
   b) Listing of SIUs issued permits.
   c) Listing of SIUs inspected and/or monitored during the previous reporting period and summary of results.
   d) Listing of SIUs notified of promulgated pretreatment standards or applicable local standards who are on compliance schedules. The listing should include for each facility the final date of compliance.
   e) Summary of POTW monitoring results not already submitted on Discharge Monitoring Reports and toxic loadings from SIU's organized by parameter.
   f) A summary of additions or deletions to the list of SIUs, with a brief explanation for each deletion.

3. Enforcement Status: Status of enforcement activities to include:
   a) Listing of SIUs in significant non-compliance (as defined by 40 CFR 403.8(f)(2)(viii) with federal or local pretreatment standards at end of the reporting period.
   b) Summary of enforcement activities taken against non-complying SIUs. The permittee shall provide a copy of the public notice of significant violators as specified in 40 CFR 403.8(f)(2)(viii).

E. ADDITIONAL PRETREATMENT CONDITIONS:
1. Notification of Material Change: Facility shall notify the NYSDEC prior to the addition of any SIUs or CIUs which may materially change the nature of the discharge from the POTW or increase the discharge of one or more substances authorized in this permit or discharge a substance not currently authorized in this permit (6 NYCRR Part 750-2.9(a)(1)). The noticed act is prohibited until the Department determines whether a permit modification is necessary pursuant to 750-2.9(a)(2).

SCHEDULE OF COMPLIANCE

a) The permittee shall comply with the following schedule:

Outfall(s)	Compliance Action	Compliance Date[5]
	SCHEDULE OF COMPLIANCE STATUS REPORTS[6] Submit interim status reports on the progress related to meeting the specified Schedule of Compliance items.	EDP + 9 Months, and every 9 months thereafter
	DESIGN DOCUMENTS The permittee shall submit approvable[7] Design Documents, and Plans and Specifications for the selected alternative that will ensure compliance with final effluent limitations.	EDP + 6 Months
	COMPLETE CONSTRUCTION The permittee shall provide a Certificate of Completion[8] to the Department that the disposal system has been fully completed in accordance with the approved Design Documents.	10/1/2027
	COMMENCE OPERATION Following receipt of Department acceptance of Certificate of Completion, the permittee shall comply with the final effluent limitation(s) described in this permit.	Upon Department Acceptance
Unless noted otherwise, the above actions are one-time requirements.		

b) The permittee shall submit a written notice of compliance or non-compliance with each of the above schedule dates no later than 14 days following each elapsed date, unless conditions require more immediate notice as prescribed in 6 NYCRR Part 750-1.2(a) and 750-2. All such compliance or non-compliance notification shall be sent to the locations listed under the section of this permit entitled RECORDING, REPORTING AND ADDITIONAL MONITORING REQUIREMENTS. Each notice of non-compliance shall include the following information:
   1. A short description of the non-compliance;
   2. A description of any actions taken or proposed by the permittee to comply with the elapsed schedule requirements without further delay and to limit environmental impact associated with the non-compliance;
   3. Any details which tend to explain or mitigate an instance of non-compliance; and
   4. An estimate of the date the permittee will comply with the elapsed schedule requirement and an assessment of the probability that the permittee will meet the next scheduled requirement on time.

c) The permittee shall submit copies of any document required by the above schedule of compliance to the NYSDEC Regional Water Engineer and to the Bureau of Water Permits.

[5] 6 NYCRR 750-1.14 (a)
[6] 6 NYCRR 750-1.14 (b)
[7] 6 NYCRR 750 1.2 (a)(8)
[8] 6 NYCRR 750-2.10 (c)

MONITORING LOCATIONS – During Construction

The permittee shall take samples and measurements, to comply with the monitoring requirements specified in the permit for the timeframe during construction, at the location(s) specified below:

Influent: Before the grit chamber

Effluent: After the chlorine contact tank

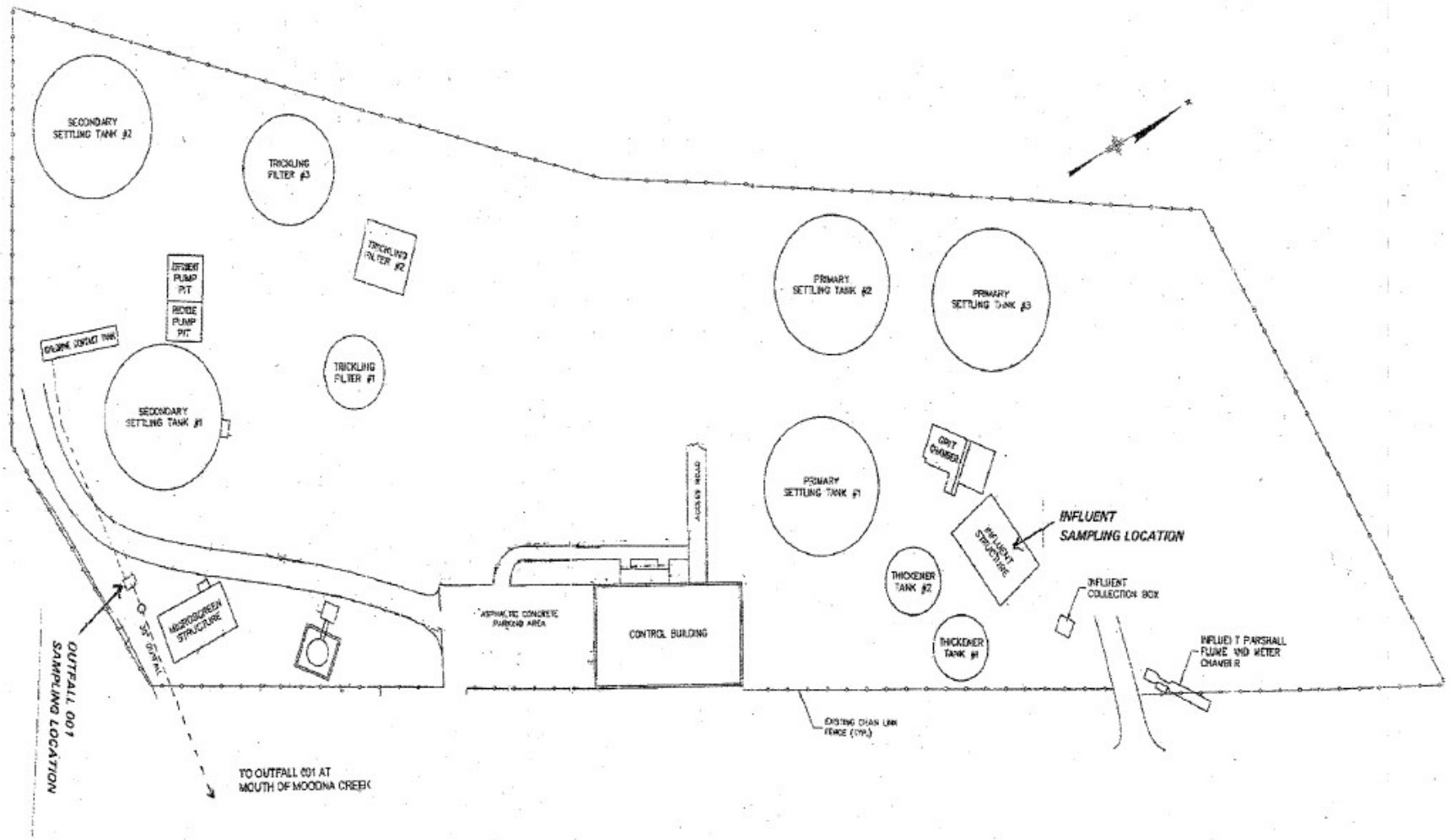

MONITORING LOCATIONS – Post Construction

The permittee shall take samples and measurements, to comply with the monitoring requirements specified in this permit for the timeframe after construction, at the locations(s) specified below:

Influent: Before the mechanical bar screen

Effluent: After the post-aeration tank

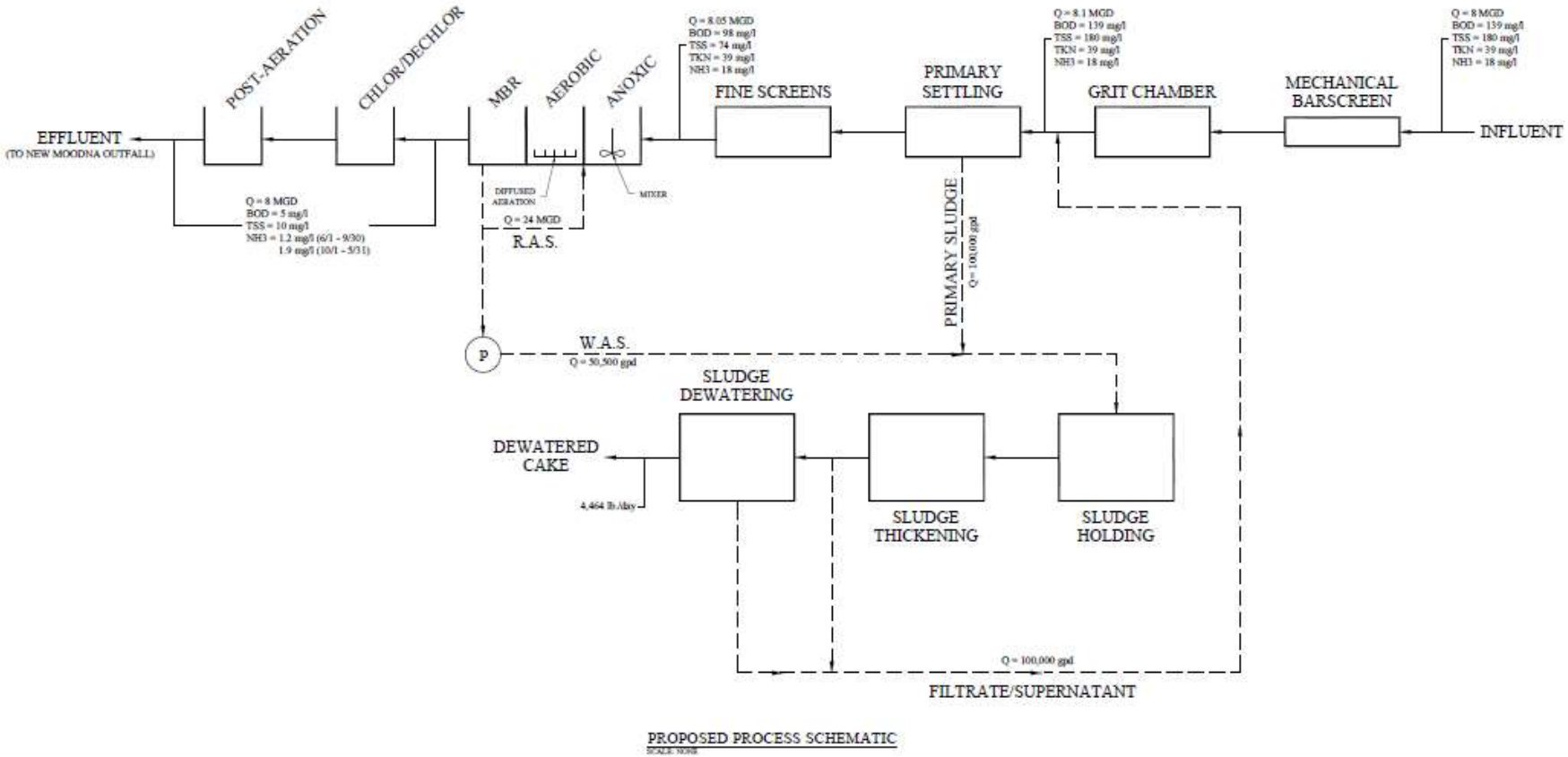

PROPOSED PROCESS SCHEMATIC

GENERAL REQUIREMENTS

A. The regulations in 6 NYCRR Part 750 are hereby incorporated by reference and the conditions are enforceable requirements under this permit. The permittee shall comply with all requirements set forth in this permit and with all the applicable requirements of 6 NYCRR Part 750 incorporated into this permit by reference, including but not limited to the regulations in paragraphs B through I as follows:

B. General Conditions

1.	Duty to comply	6 NYCRR 750-2.1(e) & 2.4
2.	Duty to reapply	6 NYCRR 750-1.16(a)
3.	Need to halt or reduce activity not a defense	6 NYCRR 750-2.1(g)
4.	Duty to mitigate	6 NYCRR 750-2.7(f)
5.	Permit actions	6 NYCRR 750-1.1(c), 1.18, 1.20 & 2.1(h)
6.	Property rights	6 NYCRR 750-2.2(b)
7.	Duty to provide information	6 NYCRR 750-2.1(i)
8.	Inspection and entry	6 NYCRR 750-2.1(a) & 2.3

C. Operation and Maintenance

1.	Proper Operation & Maintenance	6 NYCRR 750-2.8
2.	Bypass	6 NYCRR 750-1.2(a)(17), 2.8(b) & 2.7
3.	Upset	6 NYCRR 750-1.2(a)(94) & 2.8(c)

D. Monitoring and Records

1.	Monitoring and records	6 NYCRR 750-2.5(a)(2), 2.5(a)(6), 2.5(c)(1), 2.5(c)(2), & 2.5(d)
2.	Signatory requirements	6 NYCRR 750-1.8 & 2.5(b)

E. Reporting Requirements

1.	Reporting requirements	6 NYCRR 750-2.5, 2.7 & 1.17
2.	Anticipated noncompliance	6 NYCRR 750-2.7(a)
3.	Transfers	6 NYCRR 750-1.17
4.	Monitoring reports	6 NYCRR 750-2.5(e)
5.	Compliance schedules	6 NYCRR 750-1.14(d)
6.	24-hour reporting	6 NYCRR 750-2.7(c) & (d)
7.	Other noncompliance	6 NYCRR 750-2.7(e)
8.	Other information	6 NYCRR 750-2.1(f)
9.	Additional conditions applicable to a POTW	6 NYCRR 750-2.9

F. Planned Changes

1. The permittee shall give notice to the Department as soon as possible of planned physical alterations or additions to the permitted facility when:

   a. The alteration or addition to the permitted facility may meet any of the criteria for determining whether facility is a new source in 40 CFR §122.29(b); or
   b. The alteration or addition could significantly change the nature or increase the quantity of pollutants discharged. This notification applies to pollutants which are subject either to effluent limitations in the permit, or to notification requirements under 40 CFR §122.42(a)(1); or
   c. The alteration or addition results in a significant change in the permittee's sludge use or disposal practices, and such alteration, addition, or change may justify the application of permit conditions that are different from or absent in the existing permit, including notification of additional use or disposal sites not reported during the permit application process or not reported pursuant to an approved land application plan.

In addition to the Department, the permittee shall submit a copy of this notice to the United States Environmental Protection Agency at the following address: U.S. EPA Region 2, Clean Water Regulatory Branch, 290 Broadway, 24th Floor, New York, NY 10007-1866.

GENERAL REQUIREMENTS (continued)

2. Notification Requirement for POTWs
   All POTWs shall provide adequate notice to the Department and the USEPA of the following:

   a. Any new introduction of pollutants into the POTW from an indirect discharger which would be subject to section 301 or 306 of CWA if it were directly discharging those pollutants; or
   b. Any substantial change in the volume or character of pollutants being introduced into that POTW by a source introducing pollutants into the POTW at the time of issuance of the permit.
   c. For the purposes of this paragraph, adequate notice shall include information on:
      i. the quality and quantity of effluent introduced into the POTW, and
      ii. any anticipated impact of the change on the quantity or quality of effluent to be discharged from the POTW.

   POTWs shall submit a copy of this notice to the United States Environmental Protection Agency, at the following address:
   U.S. EPA Region 2, Clean Water Regulatory Branch, 290 Broadway, 24th Floor, New York, NY 10007-1866

G. Sludge Management
   The permittee shall comply with all applicable requirements of 6 NYCRR Part 360.

H. SPDES Permit Program Fee
   The permittee shall pay to the Department an annual SPDES permit program fee within 30 days of the date of the first invoice, unless otherwise directed by the Department, and shall comply with all applicable requirements of ECL 72-0602 and 6 NYCRR Parts 480, 481 and 485. Note that if there is inconsistency between the fees specified in ECL 72-0602 and 6 NYCRR Part 485, the ECL 72-0602 fees govern.

I. Water Treatment Chemicals (WTCs)
   New or increased use and discharge of a WTC requires prior Department review and authorization. At a minimum, the permittee must notify the Department in writing of its intent to change WTC use by submitting a completed *WTC Notification Form* for each proposed WTC. The Department will review that submittal and determine if a SPDES permit modification is necessary or whether WTC review and authorization may proceed outside of the formal permit administrative process. The majority of WTC authorizations do not require SPDES permit modification. In any event, use and discharge of a WTC shall not proceed without prior authorization from the Department. Examples of WTCs include biocides, coagulants, conditioners, corrosion inhibitors, defoamers, deposit control agents, flocculants, scale inhibitors, sequestrants, and settling aids.
   1. WTC use shall not exceed the rate explicitly authorized by this permit or otherwise authorized in writing by the Department.
   2. The permittee shall maintain a logbook of all WTC use, noting for each WTC the date, time, exact location, and amount of each dosage, and, the name of the individual applying or measuring the chemical. The logbook must also document that adequate process controls are in place to ensure that excessive levels of WTCs are not used.
   3. The permittee shall submit a completed WTC Annual Report Form each year that they use and discharge WTCs. This form shall be submitted in electronic format and attached to either the December DMR or the annual monitoring report required below. The *WTC Notification Form and WTC Annual Report Form* are available from the Department's website at: http://www.dec.ny.gov/permits/93245.html

RECORDING, REPORTING AND ADDITIONAL MONITORING REQUIREMENTS

A. The monitoring information required by this permit shall be retained for a period of at least five years from the date of the sampling for subsequent inspection by the Department or its designated agent.

B. Discharge Monitoring Reports (DMRs): Completed DMR forms shall be submitted for each **one (1)** month reporting period in accordance with the DMR Manual available on Department's website.

DMRs must be submitted electronically using the electronic reporting tool (NetDMR) specified by NYSDEC. Instructions on the use of NetDMR can be found at https://www.dec.ny.gov/chemical/103774.html. **Hardcopy paper DMRs will only be accepted if a waiver from the electronic submittal requirements has been granted by DEC to the facility.**

Attach the monthly "Wastewater Facility Operation Report" (form 92-15-7) and any required DMR attachments electronically to the DMR or with the hardcopy submittal.

The first monitoring period begins on the effective date of this permit, and, unless otherwise required, the reports are due no later than the 28th day of the month following the end of each monitoring period.

C. Additional information required to be submitted by this permit shall be summarized and reported to the Regional Water Engineer and Bureau of Water Permits at the following addresses:

Department of Environmental Conservation
Division of Water, Bureau of Water Permits
625 Broadway, Albany, New York 12233-3505 Phone: (518) 402-8111

Department of Environmental Conservation
Regional Water Engineer, Region 3
220 White Plains Road, Suite 110, Tarrytown, NY 10591 Phone: (914) 803-8157

D. Bypass and Sewage Pollutant Right to Know Reporting: In accordance with the Sewage Pollutant Right to Know Act (ECL § 17-0826-a), Publicly Owned Treatment Works (POTWs) are required to notify DEC and Department of Health within two hours of discovery of an untreated or partially treated sewage discharge and to notify the public and adjoining municipalities within four hours of discovery. Information regarding reporting and other requirements of this program may be found on the Department's website. In addition, POTWs are required to provide a five-day incident report and supplemental information to the DEC in accordance with Part 750-2.7(d) by utilizing the Division of Water Report of Noncompliance Event form unless waived by DEC on a case-by-case basis.

E. Schedule of Additional Submittals:

The permittee shall submit the following information to the Regional Water Engineer and to the Bureau of Water Permits, unless otherwise instructed:

SCHEDULE OF ADDITIONAL SUBMITTALS

Outfall(s)	Required Action	Due Date
001	WATER TREATMENT CHEMICAL (WTC) ANNUAL REPORT FORM The permittee shall submit a completed WTC Annual Report Form each year that Water Treatment Chemicals are used. The form shall be attached to the December DMR.	December DMR (January 28th)
001	ANNUAL FLOW CERTIFICATION The permittee shall submit an Annual Flow Certification form each year in accordance with 750-2.9(C)(4). The form shall be attached to the February DMR or submitted through nForm.	February DMR (March 28th)

SCHEDULE OF ADDITIONAL SUBMITTALS		
Outfall(s)	**Required Action**	**Due Date**
001	BIENNIAL POLLUTANT SCAN The permittee shall implement an ongoing monitoring program and perform effluent sampling every two years as specified in footnote of the permit limits table.	Retain and submit with next NY-2A Application
001	SHORT-TERM HIGH-INTENSITY MONITORING PROGRAM The permittee shall collect 12 samples representative of normal discharge conditions and treatment operations over 12 months for Total Dissolved Solids, Nitrite (as N), Heptachlor Epoxide, and Methoxychlor. The permittee shall use approved EPA analytical method with the lowest possible detection limit as promulgated under 40CFR Part 136 for the determination of the concentrations of parameters listed. The permittee shall submit a summary of the results.	Upon Construction Completion + 18 months
001	WHOLE EFFLUENT TOXICITY (WET) TESTING WET testing shall be performed as required in the footnote of the permit limits table. The toxicity test report including all information requested of this permit shall be attached to your WET DMRs and sent to the WET@dec.ny.gov email address.	Within 60 days following the end of each monitoring period
001	STORMWATER NO EXPOSURE CERTIFICATION Permittee must recertify every five years a condition of no exposure to stormwater in order to continue to qualify for the no exposure exclusion. The No Exposure Certification Form can be found on the NYSDEC website.	6/30/2028 and every 5 years thereafter
001	MERCURY MINIMIZATION PLAN The permittee must complete and maintain onsite an annual mercury minimization status report in accordance with the requirements of this permit.	***Maintained Onsite*** EDP + 12 months, annually thereafter
001	EMERGING CONTAMINANT SHORT-TERM MONITORING PROGRAM The permittee shall collect grab samples of both the influent and effluent from the facility's treatment system(s) associated with the identified outfall for Per-and Polyfluoroalkyl Substances (PFAS) and 1,4-Dioxane (1,4-D), unless permittee receives written notification from the Department during this time that sampling can be discontinued. Samples must be analyzed utilizing EPA draft analytical method 1633 and EPA Method 8270D SIM or 8270E SIM, respectively. The samples must represent normal discharge conditions and treatment operations and shall be obtained on a quarterly basis for at least 4 consecutive quarters, unless written notification from the Department indicates otherwise. The results shall be reported through the "Emerging Contaminants Survey for POTWs" found at: https://www.dec.ny.gov/chemical/127939.html. The permittee shall initiate track down of potential sources by completing the "Emerging Contaminants Investigation Checklist for POTWs" available at the above link. The Department may periodically request updates and/or additional monitoring to check progress on track down investigations. Elements of the checklist may be used as permit conditions in future permit modifications.	Upon Construction Completion + 18 months Within 90 days of DEC written notification

SCHEDULE OF ADDITIONAL SUBMITTALS		
Outfall(s)	**Required Action**	**Due Date**
001	PRETREATMENT PROGRAM Submit a report that briefly describes the permittee's program activities over the previous year. The report shall follow the guidelines contained in this permit and be submitted to the Regional Water Engineer and the Bureau of Water permits as well as the USEPA Region II office.	Within 60 days following the end of each reporting period

Unless noted otherwise, the above actions are one-time requirements.

F. Monitoring and analysis shall be conducted using sufficiently sensitive test procedures approved under 40 CFR Part 136, unless other test procedures have been specified in this permit.

G. More frequent monitoring of the discharge(s), monitoring point(s), or waters of the State than required by the permit, where analysis is performed by a certified laboratory or where such analysis is not required to be performed by a certified laboratory, shall be included in the calculations and recording of the data on the corresponding DMRs.

H. Calculations which require averaging of measurements shall utilize an arithmetic mean unless otherwise specified in this permit.

I. Unless otherwise specified, all information recorded on the DMRs shall be based upon measurements and sampling carried out during the most recently completed reporting period.

J. Any laboratory test or sample analysis required by this permit for which the State Commissioner of Health issues certificates of approval pursuant to section 502 of the Public Health Law shall be conducted by a laboratory which has been issued a certificate of approval. Inquiries regarding laboratory certification should be directed to the New York State Department of Health, Environmental Laboratory Accreditation Program.

EXHIBIT P

Veolia Design Package

Control Philosophy
WW UF System

Caesars Lane WTF MBR System

REV	DESCRIPTION	WRITER	CHECKER	APPROVER	DATE DD-MMM-YY
G					
F					
E					
D					
C					
B					
A	Issue for approval	PM/DMC	DMC	ET	14-MAR-2023

DOCUMENT TYPE: | VEOLIA DOCUMENT NUMBER: 510464-WTS-AU-SYS-EN23-PH-001

CONTROL PHILOSOPHY	CONTRACT	ISSUER	DISCIPLINE	PRODUCT	PHASE	TYPE	CHRONO
	510464	WTS	AU	SYS	EN23	PH	001

DRAFT

PROPRIETARY AND CONFIDENTIAL: THIS DOCUMENT AND ALL INFORMATION AND KNOWLEDGE CONTAINED OR REFERRED HEREIN ARE THE CONFIDENTIAL AND PROPRIETARY PROPERTY OF VEOLIA AND AS SUCH ARE INSTRUMENTS OF SERVICE FOR USE SOLELY WITH RESPECT TO THIS PROJECT. THESE INSTRUMENTS OF SERVICE SHALL NOT BE REPRODUCED, TRANSMITTED, DISCLOSED OR USED OTHERWISE, IN WHOLE OR IN PART, WITHOUT PRIOR WRITTEN AGREEMENT BY VEOLIA AND MUST BE IMMEDIATELY RETURNED OR DESTROYED UPON REQUEST.

WATER TECHNOLOGIES

Contents

1 Introduction 5
1.1 Process Areas 5
1.2 Definitions and Acronyms 6
2 OIT Graphics 8
2.1 System Overview Screen 8
2.2 Security & Passwords Access & Privileges 8
2.2.1 Security Login 8
2.2.2 Security Passwords 8
2.2.3 Security Access 9
2.3 OIT Navigation 10
2.3.1 Status and Color Schemes 10
2.3.2 Date and Time Synchronization 10
2.4 Triggers & Alarms 10
2.4.1 Triggers 11
2.4.2 Alarms 11
2.4.3 Alarm Banner 12
2.4.4 Alarm Summary 12
2.4.5 Alarm History 13
2.4.6 PLC Panel Status 13
2.5 OIT Trending 13
2.6 Buttons 13
3 Device Control 13
3.1 Device Modes from the OIT 14
3.1.1 Device Status 14
3.1.2 Device Modes 14
3.1.3 Motor Lead Rotation 15
4 Power Interruption/Power Up 15
4.1 Loss of Power/System Stop 15
4.1.1 Power Interruption/Power Up 15
4.1.2 System Stop 16
4.1.3 Start-Up Sequence 16
5 Communication 17

DRAFT

5.1 Plant PLC to the Veolia PLC Signals 17
5.2 Veolia PLC to the Plant PLC Signals 17
5.3 Loss of Communication Alarm with Plant PLC 17
6 Analog Control 18
6.1 PID Control Loop 18
6.2 Totalizers 18
6.3 Step Control 18
7 Biological Trains 19
7.1 Bio-Reactor Splitter Box 19
7.2 Anoxic Zones 19
7.3 Aerobic Zones 19
7.4 Dissolved Oxygen Meters 19
7.5 Process Blowers 20
7.5.1 Process Blower Low Airflow 20
7.5.2 Process Blower High Temperature 20
7.6 Alkalinity Pump for pH Control 20
7.7 Biological Process Analog Control 20
7.7.1 DO Step Control for Process Aeration 20
8 UF Train 21
8.1.1 AUTO Mode 21
8.1.2 OFF Mode 22
8.1.3 SEMI-AUTO Mode 22
8.2 UF Train States 22
8.2.1 State Permissive 22
8.2.2 Prime 22
8.2.3 Standby 23
8.2.4 Production 23
8.2.5 Backpulse 24
8.2.6 Relax 26
8.2.7 Maintenance Clean 26
8.2.8 Recovery Clean 27
8.2.9 Neutralization 28
8.3 Calculations 29

DRAFT

8.3.1 Permeate Flow Control 29
8.3.2 Production TransMembrane Pressure (TMP) 31
8.3.3 Start & Stop Train Triggers 32
8.3.4 Normal Train Rotation 33
8.3.5 Freeze Protection Enabled 33
8.4 UF Analog Control 34
8.4.1 Membrane Tank Inlet Valve 34
8.4.2 Membrane Aeration Control 34
8.4.3 Recirculation Flow Control 36
8.4.4 Sodium Hypochlorite Cleaning Equipment 37
8.4.5 Citric Acid Cleaning Equipment 37
9 Integrity Monitoring & Control 37
10 Sludge Wasting 38
11 Air Compressor Control 38
12 InSight Remote Monitoring 39
13 Technical Support 39

DRAFT

1 Introduction

The Caesars Lane Wastewater Treatment Facility (WTF) is a Wastewater UltraFiltration facility. Four UF Trains operate together to treat mixed liquor. The 2 mm fine screened wastewater flows into the bioreactor splitter box. The mixed liquor from the three biological reactors flows by gravity to the membrane tank distribution channel and then into the membrane tanks. The clean water "permeate" is drawn through the membranes by a siphon through the Permeate Flow Control Valve (20-FCV-301-X) to the backpulse tank, which overflows to de-chlorination tank.

The train dedicated RAS/WAS/Drain pump draws mixed liquor from the membrane tank and pumps it to the bioreactor splitter box. Once per day solids are wasted from the mixed liquor line.

The reader should refer to the Piping and Instrumentation Diagrams (P&ID's), and the Control Logic & Sequence Chart (CLSC) for a complete understanding of the plant control scheme as described below. The CLSC contains the following tabs: Legend, Device Controls, Train Sequence Chart (SC), Control Logic Chart (CLC), Control Loop, and Communication.

Details of the control logic, setpoints, etc. that are required to operate the plant are given in the CLSC.

In the documentation, the Programmable Logic Controller is referred to as the PLC. The PLC provides automated control of the UF equipment. All the programming for the control of the UF plant is stored in the PLC.

Modes and States are shown in capital letters, such as AUTO mode and PRODUCTION state. States are a series of steps the train follows to perform various operations, such as cleaning.

Setpoints, alarms, calculated parameters, etc., have assigned tags in the PLC code. When tags are used in the Control Philosophy, they are identified by an alpha-numeric label, for example, 20-P501-1, for a RAS/WAS/drain pump for UF train 1.

1.1 Process Areas

This document covers a general description of the controls by Veolia for the following unit processes:

- Feed & Pre-treatment (by Others),
- Biological Reactor Trains
- Ultra-Filtration (UF) Trains,
- Backpulse Equipment,
- Aeration Equipment,
- Clean-In-Place (CIP) Equipment,
- Waste Activated Sludge (WAS) Equipment
- Compressed air system.

DRAFT

1.2 Definitions and Acronyms

Table 1 Definitions and Acronyms

Word/Acronym	Definition
ACF	Activated Carbon Filters
Alarm	An alert sounded on the OIT when there is a system disruption or condition failed. There are different alarms for different severity of faults (Ex: Critical Alarm when tank is overflowing)
CIP	Clean-In-Place
Command	Every action made on the PLC that produces a change in equipment status
CP	Control Philosophy
CLSC	Control Logic & Sequence Charts
CV	Control Variable, sometimes called the manipulated variable
DO	Dissolved Oxygen
Faceplate	Used in the OIT to display dynamic process variables. Oftentimes, the faceplate is a pop-up and controls/modes can be selected on it.
FCE	Final Control Element, Equipment that physically controls a desired output variable
Floc	Colloids and fine particles come out of suspension and floc together to form floc
Flocculation	Process where coagulated clumps join to form a cloud and then precipitate out
HMI	Human Machine Interface, screen used by plant personnel to view/display/control real-time/dynamic process data
I/O	Inputs and Outputs of the PLC
Interlock	In place to prevent undesired actions/situations from occurring
Local Controls	These controls are set via the HOA (Hand Off Auto) switch in the plant, usually on a piece of equipment. Local means in the field, at the physical location of the equipment. Local control means at the equipment or control from the MCC starter panel.
Loop	A management system to regulate a process
MBR	Membrane Bioreactor
MCC	Motor Control Center
OIT	Operator Interface Terminal
P&ID	Piping and Instrumentation Diagram
Permissive	Conditions or pre-requisite steps that must be met in order to continue / progress further in process scheme

DRAFT

Word/Acronym	Definition
PFD	Process Flow Diagram, Chart to show the flow of the system/plant
PID	Proportional Integral Derivative control. This type of control is used to handle changes in process such as varying flow, etc.
PLC	Programmable Logic Controller
Proportional	This control is used to adapt to process changes (not predictive, but reactive) (Ex: injecting a quantity of chemical based on current flow values)
PV	Process Variable, Variable being measured in a control loop (compared to the set point)
RAS	Recirculated Activated Sludge
Ready	Equipment is ready for service and waiting for service command from plant control system / PLC or similar device. No active safety interlock or fault condition exists.
Remote/Local	These controls are set via the Hand-Off-Auto (HOA) switch in the plant, usually on a piece of equipment
Remote/Soft Controls	These controls are operated via the OIT
RO	Reverse Osmosis
Sequence	Order of specific tasks or steps of process
SC	Sequence Chart
Signal	The communication between the user and the control system
SP	Set Point, The target value for a variable in the process
SS, TSS	Suspended Solids, Total Suspended Solid
State	Sequence of automated steps (XXX)
System Mode	Placement of complete system (AUTO, SEMI-AUTO, and OFF).
TMP	TransMembrane Pressure
Unit Operations	A basic step in a process, functional box (Ex: train)
UPS	Uninterruptible Power Supply
VFD	Variable-Frequency Drive
WAS	Waste Activated Sludge

DRAFT

2 OIT Graphics

An PLC is provided to control and monitor the system operation remotely. The system is designed to communicate with the customer's PLC. See the network architecture drawing for the specifics of the PLC, OIT (HMI), and software.

The state, step and duration remaining in the step is displayed on the train screen at the OIT.

The OIT screen captures in the following sections are example screen, to provide directions to the operators on how to use the OIT.

2.1 System Overview Screen

Reference the Overview screen to show process flow through the system. Navigation to other screens may be done by selecting the respective process area or arrows.

2.2 Security & Passwords Access & Privileges

The ability to de-energize the "general alarm" output (for a horn or callout) and acknowledge alarms does not require a password, but alarms cannot be reset without a password.

2.2.1 Security Login

To be able to access control functions of the OIT, the user must first login. The login screen is accessed by pressing the Security Status button at the bottom of the screen.

2.2.2 Security Passwords

There are three levels of password protection; Operator, Supervisor, & Administrator, which is the Veolia standard. To gain access to make changes on the OIT, the operator is required to enter the correct password. There is no limit to the number of times another password can be attempted.

The system is designed with the following initial Usernames and Passwords.

Table 2 Security Levels

Security Level	Username	Password
Guest	Default	N/A
Operator	oper	Provide during commissioning
Supervisor	super	Provide during commissioning
Administrator	admin	Provide during commissioning

Access by unauthorized users may be a potential risk to correct equipment operation. The end user is encouraged to modify these initial usernames and passwords after commissioning and acceptance of the system.

DRAFT

The Guest access, no username or password required, is permitted the following actions:

1. Access to major screens (all screens listed in the graphics index popup).
2. Silence horn and acknowledge alarms.
3. No access to Alarm Reset button.

A screensaver blanks the screen after a set amount of time of inactivity, typically 60 minutes. The screen is reactivated by a single touch. Reactivation cannot select a device or operating sequence. The password must be re-entered for Operator/Supervisor/Administrator access.

The Operator access permitting the following actions:

1. Access to view all screens.
2. Access only to view setpoints.
3. Access to view and adjust of all train operational modes.
4. Access to view and selection of train state button views.
5. Resetting of all alarms.
6. Access to operate pumps and valves.
7. Access to operate and configure PID controllers, except for PID tuning constants.

The Supervisor access is permitting the following actions:

8. All operator permissions.
9. Access to adjust setpoints.
10. Access to operate and configure PID controllers, including PID tuning constants.

OIT Administrator access is permitting the following actions:

11. All Supervisor permissions.
12. Access to view and adjust for equipment operation such as turning parameters for PID loops.
13. Access to installation options for the design.
14. Permission to exit the runtime application.

2.2.3 Security Access

To prevent unauthorized access, users should logout after control actions are complete. To logout, the user opens the Security Access screen and presses the Security Lock button. This action will reset security to the default guest level. The system will also automatically reset the security after 60 minutes of screen inactivity.

The end user when logged in as administrator is able to add and delete individual users if so desired. The end user is encouraged to customize the default user names and default passwords shown above. The default is three separate accounts at each level of access.

DRAFT

2.3 OIT Navigation

When OIT is powered up, the main screen is shown. Screen access buttons are located on the bottom of the Main, Overview and Unit screens. These include the Overview, Graphics Index and Setpoints.

The unit screens can be accessed by the following:

- Selecting the graphic of the unit on the overview screen.
- Pressing the Graphics Index button, which displays the Graphics Index Faceplate. On this index selected the area button for example UF Train 1.

The following HMI color scheme is standard but selection of red in place of green is also standard. The specification does not define the OIT colors.

2.3.1 Status and Color Schemes

Table 3 Status and Color

Color	Valve	Pump	Analog Equipment Speed/Position	Alarm Status
Grey	Closed	Off	Grey (when commanded percent open/speed is < 1%	N/A
Green	Open	On	Grey (when commanded percent open/speed is < 1%	N/A
Red	N/A	N/A	N/A	Alarm – Critical & Alarm - Warning

2.3.2 Date and Time Synchronization

The OIT date and time is displayed in the top right corner of every screen. The OIT date/time is synchronized to the PLC Date/Time. The Clock Synchronization screen can be accessed by pressing this display. The OIT clock will be continually updated from the PLC clock and will be displayed on the OIT screen. The user can update the OIT and PLC clocks from the OIT if necessary.

2.4 Triggers & Alarms

Alarms are displayed on the OIT using the text shown in the CLC Tag/Mnemonic and Description cells. Alarms are tracked on the alarm summary screen.

Alarms, Triggers, and Setpoints that have a value for Range Minimum and Range Maximum are adjustable by the operator at the OIT. When there are no values provided for Range Minimum or Range Maximum, then the setpoint value is not adjustable at the OIT.

Setpoints for transmitters are dedicated to the transmitter.

DRAFT

Setpoints that are process setpoints, such as the backpulse duration, are plant setpoints, common to all the trains.

2.4.1 Triggers

A trigger is a normal event that can clear an alarm or be one of several points in a sequence of events. These triggers are listed in the CLC as “Trigger” under the Type column.

2.4.2 Alarms

Alarms are used to identify a problem with the system.

Critical alarm: The critical alarms are used to protect equipment from damage. If a critical alarm occurs requiring the unit to shutdown, the unit will proceed immediately to the Fault step. The operator can reset a critical alarm by pressing the System or Unit Alarm Reset button on the OIT. This button resets the alarm, and the unit will resume operation as defined in the Sequence Chart (SC). If it is a latched alarm at the VFD it will need to be reset at the VFD and then at the OIT.

Warning alarm: Warning alarms are used to notify the operator of an abnormal condition. The operator is expected to acknowledge a warning alarm by pressing the Acknowledge All button and correct the abnormal situation. If the problem is not corrected, production quality/quantity may be affected in the future.

Alarms are listed in the CLC as either “Alarm – Warning” or “Alarm – Critical” under the Type column.

If a loss power alarm is active, then the train proceeds directly to fault step 31. In Step 31, the valves are in safe position and there is no demand for pumps/blowers.

When a shutdown alarm except for loss of power is active, then the train proceeds to the first fault step of the current state.

RECOVERY CLEAN and NEUTRALIZATION have fault step 29, which has a duration of 120 minutes. During this step the membrane tank is not refilled with mixed liquor and all pumps/blower are off and the valves are closed. This step allows the operator to resolve the shutdown alarm without diluting the cleaning solution with mixed liquor. The operator can then resume the clean. See the fault step in the Sequence Chart (SC) for how the train recovers after the alarm is resolved.

In STANDBY, PRODUCTION, PRIME, BACKPULSE, RELAX, MAINTENANCE CLEAN, RECOVERY CLEAN, NEUTRALIZATION step 30 refills the membrane tank with mixed liquor. In Step 31, the valves are in safe position and there is no demand for pumps/blowers. After the operator has resolved the alarm and reset the alarm, then the train proceeds according to the Sequence Chart (The CLC lists under the reset column the requirements to reset the alarm. Several of these alarms require the operator to press the Train Alarm Reset Button.)

In MAINTENANCE CLEAN step 31, when the shutdown alarm is reset, the train proceeds to MAINTENANCE CLEAN step 10 to flush the cleaning solution from the permeate header.

In RECOVERY CLEAN step 31, the train proceeds to NEUTRALIZATION, since the membrane tank has been refilled with mixed liquor. In NEUTRALIZATION step 31, the train proceeds to NEUTRALIZATION step 1.

DRAFT

Typical alarms that shutdown a train are listed in the following table.

Table 4 Train Shutdown Alarms

Alarm Description	Possible Causes	Reset
Permeate High flow	Suction disconnecting from the fittings	After condition is resolved the UF train alarm reset button
Permeate Low flow	Loss of prime	Run the ejector to restore prime, then the UF train alarm reset button
Permeate Pressure High-high (Measured by pressure transmitter)	Suction disconnecting from the fittings	After condition is resolved the UF train alarm reset button
TransMembrane Pressure Low-low (Measured by pressure transmitter)	Fouled UF membranes	Clean the UF train. The UF train alarm reset button
Compressed Air low pressure	Insufficient compressed air to operate the pneumatically actuated valves	Automatic restart when there is sufficient compressed air pressure
Membrane Tank Low level	Permeate flow rate is higher than the feed flow rate	Automatic restart when the membrane tank level is above the setpoint
Loss of Power	Tripped breaker inside the panel	Automatic restart when power is restored provided that Auto Restart is enabled

2.4.3 Alarm Banner

When Alarms are triggered, an alarm banner will be shown at the top of OIT screen. Operators can Acknowledge alarm or Clear alarm by pressing pushbutton in alarm banner. The alarm banner is closed by pressing the Exit button.

2.4.4 Alarm Summary

When an alarm occurs, the user should check the current alarms from alarm summary screen, which is accessed by pressing the Alarm Summary pushbutton at the bottom of the screen. This screen will show the Alarm Date/Time and Alarm Description of the current alarms. If an alarm has been acknowledged, this Date/Time will be shown as well.

The alarm acknowledge button cancels the panel horn, flashing indicating display lights, and alarm signals. For diagnostic reasons, the specific alarm indication on the operator interface does not clear until the alarm condition is corrected.

Based on the alarms, the operator should address the situation and fix the issue causing the alarm. If the problem is not corrected, equipment operation and production may be affected.

Once the cause of the alarm has been addressed, the alarm can be reset by either pressing the corresponding Unit Reset button (i.e., MBR train) or Reset All or the Device Reset button.

DRAFT

An alarm that is activated by an instrument, pressure transmitter, flow transmitters, or level instrumentation, typically requires a pump or certain device to be on to generate the required flow or pressure. Otherwise, the alarm will be ignored if the device to be protected is off.

All alarms are indicated with a message on the screen. The operator cannot reset the alarm without the correct password. All alarms and the time they occurred are recorded on the alarm history screen.

Devices in Hand/Local cannot have their status changed by the PLC. Consult the CLC for details on specific alarms, the corresponding actions and reset procedures.

2.4.5 Alarm History

Alarm History screen can be accessed from the Alarm Summary screen. The alarm history shows the alarm date/time, acknowledge date/time and description of all alarms that have occurred with the most recent shown first.

2.4.6 PLC Panel Status

The status of the PLC is displayed on the Faceplate. The alarms for the panels are set at this Faceplate. Select the PLC Panel Status button on the Overview screen to display this Faceplate.

2.5 OIT Trending

PID control variables are trended for 10-minute duration. The OIT screen graphically displays the Setpoint (SP), Process Variable (PV), and Control Variable (CV).

PID control variables are trended for 10-minute duration at 0.5 second intervals. Each PID controller will trend percentage of the Setpoint, Process Variable and Control Variable. The trend screen can be used to assist with tuning of the PID loops.
All transmitters and derived values, such as TMP, are trended for a 10-minute duration.

2.6 Buttons

After a button is pressed at the OIT, it is reset after one scan time.

3 Device Control

Reference the Legend screen for device status indications.

For DOL (Direct On Line) motor starters, the PLC monitors running status. There is a run command from the PLC. Failure to start/run alarm is calculated by PLC when the run feedback status signal is lost after pre-determined delay timer.

For the standard VFD, the PLC monitors running status. There is a run command and speed command.

A failure to start/run alarm is calculated by PLC when the run feedback status signal is lost after pre-determined delay timer.

DRAFT

For Sodium Hypochlorite and Citric Acid Pumps, the PLC monitors Remote (Auto), Fault Signal, Running feedback. There are run command and speed command. A local HOA (Hand-Off-Auto) station is located near the motor to be adjusted by the operator.

For Alkalinity pump, the PLC monitors Fault signal. There are run command and speed command.

3.1 Device Modes from the OIT

For equipment that is controllable from the PLC in either a MANUAL or AUTOMATIC mode, the operator is provided with a software “AUTO/MANUAL” selector switch at the operator OIT workstation. This switch is functional only when LOCAL-OFF-REMOTE switch in the field is in REMOTE position. The following are the AUTO- MANUAL functions.

Select a device to display the pop-up controls. The pop-up will have the following momentary pushbuttons:

3.1.1 Device Status

Device statuses describe conditions that will change how the device responds to commands.

- Interlocked – An Interlock is a condition external to the device that disables it from operating. Specific Interlock states and descriptions are described in the device interface in the OIT.
- Faulted – is a fault alarm from a VFD, motor starter, or device. A fault condition prevents a device from running.
- Remote – A device is considered to be in Remote when it is able to be controlled by the PLC rather than controls local to the device in the MCC. When a device is not in Remote Auto (MCC local) control "L" in an orange square is displayed beside the device.
- Ready – A device is Ready when it is not interlocked and not in manual. Motors must also be in Remote, not Faulted and the Fail to Run alarm is not active. The Ready status indicates that it is able to be commanded by automatic process controls from the PLC.
- Alarm – A device is in alarm when any device alarm is active, for example: Fail to Run, Fault, Fail to Open, Out of Range, etc.

3.1.2 Device Modes

For equipment that is controllable from the PLC in either a MANUAL or AUTOMATIC mode, the operator is provided with a software “AUTO/MANUAL” selector switch at the operator OIT workstation. This switch is functional only when LOCAL-OFF-REMOTE switch in the field is in REMOTE position. The following are the AUTO- MANUAL functions.

Most devices are able to be operated in either Auto or Manual mode, as described below:

- Auto – The operator sets the device for automatic operation. The device will be prevented from operating by any active alarm interlocks unless the interlock’s bypass is selected. The device operates as shown in the Sequence Chart or as defined in the CLC.
- Manual – The operator sets the device for manual operation. In this mode, the Start and Stop buttons are active for a pump/blower, etc. or Open and Close buttons are active for a valve. The device operates with all alarm interlocks enabled unless an interlock’s bypass is selected.

DRAFT

3.1.3 Motor Lead Rotation

Lead is changed when the button is pressed.

OR

If “Auto Rotation” on “Run Time” is enabled, when the duty cycle timer times out (range: 0-100 hrs., default 12 hours, 0 hours disables selection). A lag device must be stopped for one hour before it can rotate in for the run time of another device.

OR/AND

When the “Demand Loss Rotation” is selected and the running devices stops due to a fault or interlock, then the PLC rotates the lead of the devices, where the lag device becomes the lead device.

If the lead device is interlocked or faulted, the lag device starts automatically. The interlocked or faulted device retains the lead position, with the lag device operating in its place.

The SCADA indicates which device is the lead.

4 Power Interruption/Power Up

4.1 Loss of Power/System Stop

On the PLC Panel Status screen, the operator selects Power Restored Start to either Auto, which Automatically reset the operation of the plant on loss of power or Manual, which requires the operator to manually restart the plant after a power loss.

4.1.1 Power Interruption/Power Up

The Veolia PLC monitors the plant control power supply.

On loss of plant control power supply, the Veolia PLC:

- All automatic valves will move to their fail positions,
- All motors will stop,
- All trains proceed immediately to the Faulted step of the current state and wait for power to resume.

When power is restored, the control system will power-up. The system can be configured for automatic or manual restart after power-up. In manual mode, a PLC Power Restored alarm will occur. This alarm will need to be reset by the operator for equipment to operate. In Automatic mode, the Power Restored alarm will be reset by the PLC and power-up process will start automatically. After the alarm is reset, there is an Equipment Power up delay. During power-up, the unit processes are in the fault step of the current state and locked out from operation. After the equipment power-up delay is complete, the unit fault is cleared, and the equipment will restart normally. The power up status is displayed at the bottom of the screen.

DRAFT

The power-up settings are accessed by pressing the PLC Panel Status button on the Main screen. This screen also shows the status of the Power Health, Operational Stop Button, PLC Flash Load, PLC Battery and PLC Forces Enabled alarms.

On disruption of power to individual Veolia control panels:

- the affected trains immediately proceed to the Faulted step of the current state.

When a train is Faulted due to loss of power, the system blocks all fail safe inputs that are normally closed (to avoid nuisance alarms).

When power is restored, and the system is in Auto Restart after a Power loss:

- the valves are function according to the sequence chart and the CLC. The mixers are started
- the process blowers start one at a time with a time delay between starts.
- all trains are restarted one at a time with time delay between starts, following the Start-Up sequence detailed in the Control Logic Chart.

4.1.2 System Stop

A mechanical System Stop pushbutton is also provided at the panel to allow for the operator to immediately stop all equipment through the PLC.

When the button is pressed, an alarm occurs:

- all common equipment is stopped immediately.
- all trains transition to the Faulted step of their current state.

When the system stop button is physically pulled out, the alarm is reset:

if the Power Restored Restart is in Auto:

- the valves are function according to the sequence chart and the CLC. The mixers are started
- the process blowers start one at a time with a time delay between starts.
- all trains are restarted one at a time with time delay between starts, following the Start-Up sequence detailed in the Control Logic Chart.

if the Power Restored Restart is in Manual, then the operator manages system restart.

When the System Stop button is pulled out and the Reset button pressed, power is restored to the outputs. When the System Stop Alarm is reset at the OIT. After the alarm is reset, there is an Equipment Power up delay. During power-up, the unit processes are in the fault step of the current state and locked out from operation. After the equipment power-up delay is complete, the unit fault is cleared, and the equipment will restart normally.

4.1.3 Start-Up Sequence

The start-up sequence is the order in which the devices in the plant are re-enabled after a power interruption or after a system stop is reset.

When re-enabled, each train proceeds according to the Sequence Chart (SC).

DRAFT

A delay is provided in each step to allow for devices to start before advancing to the next step. Steps are skipped for those devices which are not ready.

5 Communication

For the Veolia membrane system to maintain optimal performance, information must be communicated between the plant PLC and the Veolia PLC. The signals required are both analog and digital.

Operating parameters of the Veolia system such as flow rates, pressures, train sequences, etc. are available for communication, if necessary, when the plant SCADA is required to only monitor these parameters. A list showing this information, however, is not provided in this document due to the large number of parameters available.

The Veolia PLC and plant PLC both generate a heartbeat signal. Each “heartbeat” signal increments at a regular rate, (e.g., each second), and is monitored by the other PLC. When communication with a PLC is lost, the PLC that is monitoring the “heartbeat” signal detects that the state of the signal has not changed for a pre-set time, for example after 5 seconds, and alarms.

When the counter reaches 10,000 it restarts counting from zero.

Discussions of the alarms and the changes that occur to the control systems are given in the following sections.

5.1 Plant PLC to the Veolia PLC Signals

The list given below shows the signals that are communicated from the plant PLC over the network to the Veolia PLC to operate the membrane system.

1. Heartbeat
2. Feed Flowrate

Is there reduced capacity when operating with Generator power?

5.2 Veolia PLC to the Plant PLC Signals

The list given below shows the signals that are communicated from the Veolia PLC over the network to the plant PLC to assist in the operation of the membrane system.

1. Heartbeat

5.3 Loss of Communication Alarm with Plant PLC

When there is a loss of communication with the plant PLC, the plant permeate flow demand is based on the trim factor (average membrane tank level).

DRAFT

6 Analog Control

The following Proportional and PID controls are provided. Refer to the Control Loop tab in the CLSC for details about which controllers are used for specific devices.

6.1 PID Control Loop

Some of the pumps/valves in the system are controlled using PID loops to vary the speed/position based on process conditions.
The PID is controlled by accessing the appropriate PID screen. The PID screen displays the PID setpoint (SP), process value (PV), control variable (CV), tuning setpoints and AUTO/MANUAL control. PID control of the device is enabled whenever the run signal to that device is enabled. In Auto mode, the PID output is calculated based on the Setpoint, Process value and tuning parameters. When a fixed output is desired for control, the operator has the option of placing the PID in the Manual mode, which fixes the output to the Manual PID Output setpoint in the range of 0-100%. The PID is configured for “bumpless” transfer between Auto and Manual control. The PID control also trends the Setpoint, Process variable and control variable for tuning purposes.

In addition to the standard PID control loop, some controllers have the following options. Refer to the Control Loop Chart and Unit Sequence Chart in the CLSC for details.

- CV Restart. During initial device operation, the CV can either start at a set CV or Last CV during previous operation.

- Preset CV. During certain sequence steps, the CV output is set to a Preset CV.

- Auto/manual setpoint. In Manual Mode, the setpoint is user adjustable. In Auto Mode, the setpoint is based on a calculated value.

Refer to the Control Loop chart in the CLSC for details about which devices are controlled using PID controllers.

6.2 Totalizers

The PLC sums the flows and displays a current running total, current day total and a 7-day total history. At midnight, the current day total is moved to the previous day total and the today total is reset to 0. Where appropriate, the current running total can be reset by pressing the reset button, which captures the current running total as previous running total and resets the current running total. The reset is time stamped and the reset date and time are displayed.

6.3 Step Control

A step controller is used when the change in the process parameter is very slow. At a regular frequency, (typically every 5 minutes), the process parameter is compared to an operator entered setpoint for the step controller.

- When the process parameter value is near the setpoint value as defined by a deadband 1 the output of the controller is not changed. The range for the deadband 1 is not adjustable.

DRAFT

- When the process parameter value is outside of the deadband 1 but within deadband 2, the setpoint is changed by a fixed percentage/value. The range for the deadband 2 is not adjustable.
- When the process parameter value is outside of the deadband 2, the setpoint is changed by a fixed percentage/value.

The sizes of the step changes are hardcoded. The delay timer for the step controller is adjustable at the OIT. When the controller restarts from off, the previous value is used.

On the blower screen select the DO Control button to display the Step Controller Faceplate.

7 Biological Trains

There are 3 biological trains, and each contains an anoxic zone followed by an aerobic zone. The mixed liquor overflows to the membrane distribution channel.

There are several components of the biological trains which are controlled directly by Veolia PLC. These components include mixers, instrumentation, valves, and the Alkalinity system.

7.1 Bio-Reactor Splitter Box

The fine screened wastewater, the RAS from the membrane tanks and the alkalinity is dosed to the bio-reactor splitter box, which overflows to the anoxic zones.

7.2 Anoxic Zones

To promote denitrification, a low dissolved oxygen level is maintained in the anoxic zone. Submersible mixers provide blending of the influent with RAS and keep mixed liquor solids in suspension. The mixers run continuously in Auto.

7.3 Aerobic Zones

The aerobic zones of the Biological Reactors require air which is supplied through the fine-bubble diffuser. The air is provided by the process blowers.

The dissolved oxygen concentration, pH, and aerobic zone level are monitored. When the high-high level switch is active, the OIT displays an alarm, and the plant flow demand is set at the maximum value to prevent an overflow.

7.4 Dissolved Oxygen Meters

The aerobic zones each have one dissolved oxygen (DO) meter. The average dissolved oxygen is used to control the number of process blowers operating and the process blowers speed when Dissolved Oxygen Control mode is selected.

DRAFT

To ensure the D.O. meters are reading correctly, once per day the difference between the meter and average is calculated. If this difference is equal to or greater than the setpoint then the OIT displays a differential alarm.

When a meter is not healthy, it is not used to calculate the average dissolved oxygen.

7.5 Process Blowers

The 3 Process Blowers are configured to operate as two duty and one standby. The operator can select at the OIT either Cycle Process Blower Control or Dissolved Oxygen Control mode. See section 7.7.1 DO Step Control for Process Aeration for the control of the blower speed.

7.5.1 Process Blower Low Airflow

A low air flow switch is located on the discharge of each blower, for blower protection. If the switch is active, an alarm occurs, and the PLC changes the lead to the next available blower. If there are no blowers available, a different alarm occurs, and the PLC shuts down all trains.

7.5.2 Process Blower High Temperature

A high temperature switch is located on the blower motor for motor protection. This switch is not wired to PLC. When the switch trips, the PLC will see a loss of running alarm.

7.6 Alkalinity Pump for pH Control

Sodium hydroxide (caustic) is added for pH control to Bio-Reactor Splitter Box. A pH sensor is installed in each aerobic zone. The flow rate of the alkalinity-dosing pumps is controlled paced to the plant flow and trimmed to a pH PID loop. The setpoint for the PID loop is adjustable. Please see the Controls Loop spreadsheet for further details.

The Alkalinity (sodium hydroxide) dosing pump starts and stops based on pH triggers. The setpoints for these triggers are adjustable.

7.7 Biological Process Analog Control

7.7.1 DO Step Control for Process Aeration

When Cycle Process Blower Control mode is selected, the Dissolved Oxygen Controller stops. The operator can select the number of blowers to operate and the speed of the blowers. The operator can select either continuous or intermittent operation of the blowers. When intermittent operation is selected, the process blowers operate based on an aeration timer setpoint, and an aeration frequency timer setpoint.

When Dissolved Oxygen Control is selected, the Cycle Process Blower Controller stops. The speed of the process blowers and the number of blowers operating is controlled by the average dissolved oxygen concentration, (DO). In Auto, the operating blowers runs continuously.

The dissolved oxygen is monitored in three bioreactors and averaged. At a regular frequency, (typically every 5 minutes), the average DO is compared to an operator entered DO setpoint to control the output

DRAFT

from the blowers. When the dissolved oxygen is near the setpoint and within a specific deadband, (e.g., ± 0.2 mg/L), the speed of the blowers/aeration flow setpoint is not changed. When the dissolved oxygen is outside of the deadband, the blower speed/aeration flow setpoint is changed by a fixed percentage/value, to change the air flow to the aerobic zones.

The size step changes of the blower speed, (e.g., 2%, 5%, etc, is hardcoded. The delay timer for the step controller is adjustable at the OIT. When the controller restarts from off, the number of operating blowers and the blowers' speed are the previous values.

8 UF Train

A UF train is functionally described as a group of ZeeWeed modules and cassettes connected by a common permeate collection header. The clean water (permeate) is drawn through the UF membranes by a siphon.

Operating modes define how the transitions occur for a Train from one operating state to another. A specific mode discussed in this document is shown in capital letters, such as AUTO. Modes can only be selected by the operator, using pushbuttons on the OIT. The Semi-Auto mode button is available in all states. The Off-mode button is available in all states except OFF state. The Auto mode button is available in all states except RECOVERY CLEAN & NEUTRALIZATION.

The sequencing of each Train can be described by the mode and state of the Train. Each Train is in only one state and mode at any given time.

Buttons displayed on the OIT screen that the operator can press to initiate a mode or state, or other operation are shown with the first letter capitalized. For example, one button that is used to put a train to the OFF mode is the Off button. The specific sequencing of Modes and States and the steps involved are detailed in the SC.

When Auto mode is selected, the state selections available in Semi Auto are not visible.

8.1.1 AUTO Mode

This is the normal mode of operation for a UF Train to produce clean water.

For the train equipment to operate automatically, the operator needs to have all related devices set to AUTO and the train set to AUTO. The operation of the train is automatic when in AUTO, and there is minimal operator attention required unless an alarm is activated.

In AUTO mode with Demand Override button not enabled, the train changes state between the Production Cycle and STANDBY according to train start & stop triggers, which are based on the plant permeate flow demand. In AUTO mode with the Demand Override button enabled, the UF train proceeds to the Production Cycle without waiting for a start trigger and the stop trigger does not send the train to STANDBY.

A MAINTENANCE CLEAN is automatically triggered as required by a schedule.

DRAFT

8.1.2 OFF Mode

This mode immediately places the train to OFF state and prevents the operator from manually selecting other states until the Train is placed in another mode.

The operator may turn a train OFF at any time. Pressing the Off button places the train into OFF mode and OFF state. It is the responsibility of the operator to ensure that if the Off button is pressed when a train is in a clean, the tank's contents are suitable for a train to proceed to another mode. When the Off button was selected in RECOVERY CLEAN, then NEUTRALIZATION state may be required. When the Off button was selected in MAINTENANCE CLEAN, then BACKPULSE state may be required to remove the cleaning chemical from the permeate header.

8.1.3 SEMI-AUTO Mode

This mode safely places the train to OFF state but permits the operator to manually select other states such as a PRIME, BACKPULSE, MAINTENANCE CLEAN, AND RECOVERY CLEAN/NEUTRALIZATION. Upon completion, the train will return to the OFF state and wait for further operator selection.

8.2 UF Train States

States are a series of steps the train follows to perform various operations, such as producing water. A specific state discussed in this document is shown in capital letters, such as PRODUCTION. The states available to each train are: OFF, PRIME, STANDBY, PRODUCTION, RELAX, BACKPULSE, MAINTENANCE CLEAN, RECOVERY CLEAN & NEUTRALIZATION. Each of these states is discussed further in the following sections and detailed sequencing information is available in the SC.

8.2.1 State Permissive

The train proceeds to the selected state once the resources are available. For certain states, the state permissive prevents more than one train from entering the same state at the same time.

The state permissive must be met:

- A train cannot enter PRIME if another train is in PRIME.
- A train cannot enter MAINTENANCE CLEAN, RECOVERY CLEAN steps 1 to 20, and NEUTRALIZATION if another train is in one of these states or steps.

During MAINTENANCE CLEAN, RECOVERY CLEAN steps 1 to 20, and NEUTRALIZATION, the other trains use RELAX in place of BACKPULSE in the Production Cycle. In BACKPULSE only one of the trains has a demand for the backpulse pump at a time.

There are no state permissive for STANDBY, RELAX and PRODUCTION.

8.2.2 Prime

Each train is provided with an ejector (20-E-801-x), which uses compressed air to operate. The ejector primes the permeate piping in PRIME and at the beginning of BACKPULSE, RELAX, MAINTENANCE CLEAN, & RECOVERY CLEAN.

The train's ejector compressed air valve (20-SV-802-x) opens which also opens the permeate header isolation valve (20-FV-801-x). During this time, air in the permeate header is pulled up and out through

DRAFT

the ejector, which pulls water into the membranes and permeate line until header to pump valve (20-FV-622-x). Any water that is drawn into the ejector drains out of it by gravity.

A train proceeds to PRIME after the Auto button is pressed in the OFF state. The ejector operates for typically 60 seconds, a longer duration than what is used for intermittent operation, and the duration is adjustable at the OIT.

The operator can manually initiate PRIME by pressing the Prime button at the OIT. The Prime button is available in SEMI AUTO mode and OFF state.

When no other trains are in PRODUCTION step 2 or PRIME state step 1, then Train Permeate Ejector Valve (20-FV-802-6 &20-FV-803-6) and Common Permeate Ejector Valve (20-FV-802-6 &20-FV-803-6) open for an adjustable duration. If other trains are in PRODUCTION step 2 then these valves are closed, and the duration of PRODUCTION step 1 is 6 seconds.

The operator can manually initiate the train priming sequence by pressing the Prime button for the train at the OIT. The operator can manually initiate priming only when the train is in OFF state & SEMI AUTO mode.

8.2.3 Standby

The steps for the STANDBY are:

1. The membrane tank inlet gate is open fill the membrane tank to a level is above the membranes.
2. While a train is in Standby intermittently the ejector runs based on priming timers. the membranes are aerated, and RAS is recirculated based on the frequency and duration aeration timers. The train remains in this step until one of the following is active:
    - a start trigger.
    - train rotation trigger.
    - maintenance clean request with schedule.

    Trains are intermittently primed in STANDBY. The frequency of the priming is controlled by the Master Ejector Cycle timer. The Master Ejector Cycle timer operates when there is at least one train in STANDBY. There is a time assigned for each train when the ejector operates. The duration of the priming is controlled by an adjustable setpoint, typically 15 seconds. The duration of the Master Ejector Cycle timer is typically 12 minutes.

8.2.4 Production

In Production, the train is producing permeate. The steps for the PRODUCTION are:

1. Permeate flow control valve (20-FCV-301-x) and header to pump valve (20-FV-622-x) open. (The train permeate ejector valves and common permeate ejector valves open if no other train is in PRIME or PRODUCTION step 2.) The aeration valve, membrane tank recirculation valve, and the membrane tank inlet valve open if not already open. If the membrane aeration blower and RAS/WAS/drain pump were already running, then they continue to run.
2. The membrane aeration blower and RAS/WAS/drain pump start if not already running. The permeate flow control valve throttles the flow of clean water through the membranes to the backpulse tank. Based on time in the production cycle, the train proceeds to either BACKPULSE or RELAX. MAINTENANCE CLEAN can be triggered by the schedule in place of the either BACKPULSE or RELAX.

DRAFT

8.2.4.1 Production Cycle

The Production Cycle is the alternation of the train's states between PRODUCTION and either BACKPULSE or RELAX. The Production Cycle is controlled by a timer, typically duration is 12 minutes. The selection of either Backpulse or Relax for the Production Cycle does not affect the duration of this timer.

The Master Production Cycle timer starts when there are no trains in Production and one train is requested to start PRODUCTION. The timer restarts every time it times out.

There is a button to select either BACKPULSE or RELAX for the Production Cycle. In SEMI AUTO, there is another button to manually initiate BACKPULSE from OFF state.

With the Demand Override button not selected, the UF trains switch between STANDBY and the Production Cycle based on Start & Stop Train Triggers and train rotation triggers. The Start triggers' values are based on the Plant Permeate Flow Demand and are adjustable at the OIT.

When the supervisory flow setpoint is enabled, the permeate flow control valve (20-FCV-301-x) flow setpoint is an operator entered value. When the auto flow setpoint is enabled, the permeate Flow Control Valve (20-FCV-301-x) flow setpoint is a calculated value based on the plant permeate flow demand.

Figure 1Production Cycle

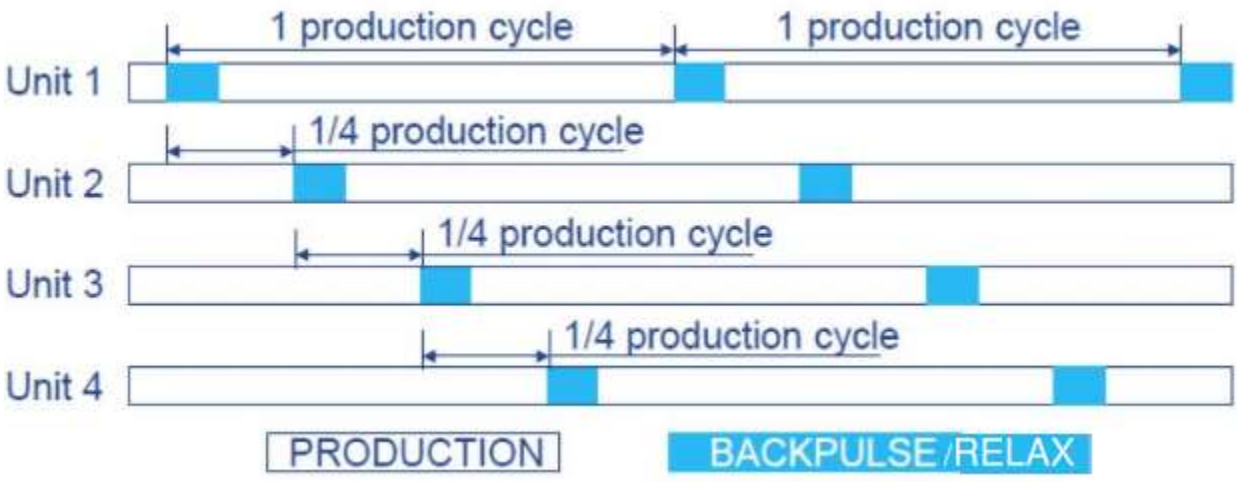

8.2.5 Backpulse

During BACKPULSE, treated water is periodically reversed back through the membranes to maintain stable transmembrane pressures. The trains' Backpulse/Relax start trigger is based on time slots in this production cycle timer.

The steps for the staggered BACKPULSE are:

1. The aeration valve, membrane tank recirculation valve, and the membrane tank inlet valve open if not already open. If the blower and RAS/WAS/drain pump were already running, then they continue to run. Close the permeate flow control valve (20-FCV-301-x) and header to pump

DRAFT

valve (20-FV-622-x). Opens the ejector valve (20-FV-802-x). The step duration is typically 6 seconds.
2. The membrane aeration blower and RAS/WAS/drain pump start if not already running. Opens the backpulse train isolation valve (20-FV-621-x), typically 6 seconds.
3. Immediately, closes the Ejector Valve (20-FV-802-x). Starts the backpulse pump and it runs for the backpulse duration time, typically 30 seconds. The water is drawn from the backpulse tank and pumped through the membranes into the membrane tank.
4. Stops the backpulse pump and closes the backpulse train isolation valve, typically 6 seconds. After the BACKPULSE is complete and if there is demand for the train to run or the Demand Override button is enabled the train proceeds to PRODUCTION. After the BACKPULSE is complete and if there is no demand for the train to run the train proceeds to STANDBY.

The PLC staggers the backpulses of the trains throughout each cycle to distribute the backpulses evenly when all trains are in the Production cycle. Each train is given a fixed scheduled time in the Production cycle timer to begin a BACKPULSE or RELAX. Train 1 is assigned the first-time slot, train 2 is assigned the second-time slot, and so on for all trains in the system. Regardless of the number of trains in the Production cycle, each train is always backpulsed at the same time slot of the Master Production Cycle timer. For example, when there are four trains in the system and the Production cycle time is 12 minutes, the first-time slot is at time 0 minute and the second-time slot, to backpulse Train 2, is at 3 minutes of the Master Production Cycle timer.

The membranes are backpulsed using Backpulse Pump. If the lead device is interlocked or faulted, the lag device starts automatically. The interlocked or faulted device retains the lead position, with the lag device operating in its place.

The PLC controls the pump speed to backpulse the trains at a set flow rate per train up to a maximum TMP. A pressure transmitter on the membrane header is used to calculate the BACKPULSE TMP. This TMP limit provides membrane protection against over-pressurization. If the TMP is too high, the TMP high trigger is active, and the flow control PID loop output is captured. This value becomes the maximum value for the output of the flow control PID loop.

When the TMP high trigger becomes active, the PLC gradually reduces the maximum for the flow PID loop output until the TMP high trigger is not active, (i.e., TMP is less positive). When the TMP high trigger becomes inactive, the maximum value is then gradually increased until the TMP high trigger is active again or continues to increase until the maximum value for the flow control PID loop output equals 100%. This control strategy allows the PLC to vary the pump speed to maximize flow while avoiding excessive TMP across the membranes.

The backpulse duration, production cycle duration, TMP limiting setpoint and the flow setpoint for all UF trains can be set through the OIT. All UF trains in the plant share the backpulse duration, production cycle duration, TMP setpoint and flow setpoint.

In SEMI AUTO, the operator can initiate a BACKPULSE from the OIT for any UF train by pressing the Backpulse button. This button is disabled if any other train is in BACKPULSE or a step with a demand for backpulse pump in MAINTENANCE CLEAN, RECOVERY CLEAN & NEUTRALIZATION.

8.2.5.1 Backpulse Tank

The backpulse tank is filled with permeate from the UF trains.

DRAFT

8.2.6 Relax

During RELAX, the solids that have concentrated around the membrane fibers are distributed away from the membrane surface by the aeration. The steps for the RELAX are:

1. Closes the permeate flow control valve (20-FCV-301-x) and header to pump valve (20-FV-622-x). Opens the ejector valve (20-FV-802-x). The step duration typically 6 seconds.
2. After six seconds closes the ejector valve. When the backpulse duration timer times out, the train proceeds to the next step, typically 30 seconds.
3. After the RELAX is complete, and if there is demand for the train to run or the train is in Demand Override the train proceeds to PRODUCTION. After the RELAX is complete and if there is no demand for the train to run the train proceeds to STANDBY, typically 6 seconds.

If a backpulse failure occurs and/or no pump is available, the PLC will replace BACKPULSE in the Production Cycle with RELAX state.

8.2.7 Maintenance Clean

The membranes require cleaning to maintain peak performance. There are two types of cleaning methods. MAINTENANCE CLEANS, and RECOVERY CLEANS.

MAINTENANCE CLEAN is scheduled through the OIT and are automatically initiated by the PLC based on a 24-hour clock. The operator may select to perform one scheduled MAINTENANCE CLEAN a train per day on the Maintenance Clean schedule screen.

The operator selectable options:

- Day of week for cleaning.
- Time of day for cleaning.
- Sodium hypochlorite for cleaning solution.
- Citric acid for cleaning solution.

When it is time to carry out a MAINTENANCE CLEAN, the PLC compares the current plant permeate flow demand with the available capacity of the plant if one train is not in service. If the plant permeate flow demand exceeds this capacity, then scheduled MAINTENANCE CLEAN is skipped but the request remains active and is started when this demand is lower. When a MAINTENANCE CLEAN is skipped or aborted, an alarm occurs to inform the operator.

If the plant permeate flow demand does not exceed this capacity, when it is time to carry out a MAINTENANCE CLEAN, the train completes its current production cycle before starting the cleaning procedure. If a train is in STANDBY, it goes directly to MAINTENANCE CLEAN.

The default steps for MAINTENANCE CLEAN are:

1. The aeration valve (20-FV-205-x) and the membrane tank inlet valve (20-Fv-209-x) open if not already open. If the blower was already running, then it continues to run. Open the aeration valve if not already open and the ejector valve (20-FV-802-x), typically for 6 seconds.
2. After six seconds closes the ejector valve. The membrane aeration blower aerates the membranes, typically for 5 minutes.

DRAFT

3. Stop the membrane aeration blower demand and close the aeration valve and align the valves for backpulse with cleaning chemical, typically for 6 seconds.
4. The backpulse pump pulses all cassettes with the selected cleaning solution (sodium hypochlorite (23-FV-130) or citric acid (23-FV-330), typically for 2 minutes. If the level in the Backpulse tank is low, the train proceeds to the next step otherwise the UF train proceed to step 6.
5. Stop the backpulse pump and chemical pump and close the backpulse train isolation valve (20-FV-621-x) and the train chemical valve. Waits for the Backpulse tank to refill. When there is sufficient water in the Backpulse tank return to step 3.
6. The PLC stops the backpulse pump and chemical pump and close the backpulse train isolation valve and the train chemical valve. Relaxation period for all cassettes, typically for 4.5 minutes.
7. The PLC aligns the valves for backpulse with the cleaning chemical, typically for 6 seconds
8. The backpulse pump and the chemical pump pulses the cassettes with the cleaning solution, typically for 30 seconds.
9. The PLC stops the backpulse pump and the chemical pump. Relaxation period for the cassettes, typically for 4.5 minutes. Steps 7 to 9 are repeated for several iterations, typically 8 iterations.
10. The PLC aligns the valves for backpulse, typically for 6 seconds.
11. The backpulse pump pulses the cassettes with permeate to remove the cleaning solution from the permeate header, typically for 2 minutes. If the level in the Backpulse tank is low, the train proceeds to the next step otherwise the UF train proceed to step 13.
12. Waits for the Backpulse tank to refill. When there is sufficient water in the Backpulse tank return to step 10.
13. The PLC stops the backpulse pump and closes the backpulse isolation valve (20-FV-621-x), and opens the aeration valve (20-FV-205-x). The step duration is typically 6 seconds.
14. The membrane blower aerates the membranes, typically for 5 minutes.
15. The train proceeds to STANDBY state in AUTO mode and to OFF state in SEMI-AUTO mode.

8.2.8 Recovery Clean

RECOVERY CLEANS can only be carried out for a train if it is in SEMI-AUTO. The operator is required to turn the train to SEMI AUTO mode and OFF state then select the R. Clean button and then either the Acid or Hypochlorite button, for the cleaning to begin. During a Recovery Clean there are several prompts which the operator must address. Consult the SC and CLC for further details. As a result, it is suggested to have the operator present during the Recovery Clean so that these prompts can be responded to in a timely manner.

RECOVERY CLEANS can be done with citric acid or sodium hypochlorite depending on which cleaning chemical the operator selects.

1. Open the aeration valve (20-FV-205-x). The membrane tank inlet gate (20-FV-209-x) is closed. The step duration is typically 6 seconds.
2. Aerates the membrane tank typically for 5 minutes.

DRAFT

3. Stops the blower demand, close the aeration valve. Open the membrane tank recirculation valve (20-FV-502-x) typically for 6 seconds.
4. Drains the membrane tank with RAS/WAS/drain pump.
5. Stops the RAS/WAS/drain pump demand and close the membrane tank recirculation valve.
6. Manual drain and flush step. The PLC will proceed to the next step after a defined duration.
7. Opens the backpulse train isolation valve (20-FV-621-x). Steps 7 to 14 are repeated for several iterations and then proceed to step 15. The number of iterations is determined on site.
8. Backpulses the membranes with permeate if the level in the backpulse tank is low then proceeds to next step or until the membrane tank is at a defined level then proceeds to step 10.
9. Relaxation period for all cassettes until there is sufficient water in the backpulse tank and then proceed to step 7.
10. Valve alignment, typically for 6 seconds.
11. Aerates the membrane tank for a defined duration, typically for 5 minutes.
12. Opens the membrane tank recirculation valve, typically for 6 seconds.
13. Drains the membrane tank with a RAS/WAS/drain pump.
14. Stop the RAS/WAS/drain pump demand, typically for 6 seconds.
15. Opens the selected clean chemical valve, either sodium hypochlorite (23-FV-130) or citric acid (23-FV-330). Opens backpulse train isolation valve (20-FV-621-x) The step duration is typically 6 seconds.
16. Backpulses the membranes with cleaning solution, if the level in the backpulse tank is low then proceeds to the next step. Or when in this step and the membrane tank level is at or above 90% of the Chemical Fill level trigger then proceeds to RECOVERY CLEAN step 18.
17. Holds this step until there is sufficient water in the backpulse tank then returns to step 15.
18. Opens the backpulse train isolation valve (20-FV-621-x), typically for 6 seconds.
19. Backpulses the membranes with permeate if the level in the backpulse tank is low then proceeds to the next step. OR When in this step and the membrane tank level is at or above the Chemical Fill level trigger setpoint then proceeds to step 21.
20. Holds this step until there is sufficient water in the backpulse tank then returns to step 18.
21. Final, extended relaxation period with intermittent aeration, typically twelve hours.
22. The operator selects the Neutralization button to proceed to NEUTRALIZATION state.

8.2.9 Neutralization

The Neutralization button is available in SEMI AUTO mode and OFF state and in all steps of RECOVERY CLEAN. The neutralization is initiated by the operator after the extended chemical soak step of the RECOVERY CLEAN. The default steps for NEUTRALIZATION are:

1. Opens the membrane tank inlet valve to fill the membrane tank to defined level with mixed liquor.
2. Open the aeration valve and close membrane tank inlet valve, typically for 6 seconds.

DRAFT

3. Aerates the membrane tank, typically for 1 minute.
4. Relaxation period for all cassettes for a defined duration typically 900 seconds and then proceed to next step.
5. Opens the backpulse train isolation valve (20-FV-621-x), typically for 6 seconds
6. Backpulses the membranes to flush the permeate header. Holds this step for step duration then proceeds to step 8. If there is insufficient water in the backpulse tank, then proceeds to the next step.
7. Holds this step until there is sufficient level in the backpulse tank then returns to step 5.
8. The operator checks the chlorine concentration and the pH. If the free chlorine and pH are with permitted limits, then press the Confirm Neutralization button and proceed to step 12. Otherwise press the Resume Neutralization button and proceed to the next step.
9. Valve alignment, typically for 6 seconds.
10. Opens the membrane tank inlet valve to adds additional mixed liquor for a defined duration typically 1 minute, and then proceeds to the next step.
11. The operator checks the chlorine concentration and the pH. If the free chlorine and pH are with permitted limits, then press the Confirm Neutralization button and proceed to step 12. Otherwise press the Resume Neutralization button and proceed to the step 9.
12. Proceeds to OFF state.

8.3 Calculations

8.3.1 Permeate Flow Control

The influent flow signal is used for the plant permeate flow demand. As the influent flow increases the plant permeate flow demand increases, causing the Permeate Flow Control Valve (20-FCV-301-X) to ramp open. To prevent standby and overflow conditions, the average level in the membrane tanks is used to trim the plant permeate flow demand. Level control is accomplished with Proportional control. The PLC performs these calculations. The plant permeate flow demand is the net permeate flowrate required from the Veolia system and does not include additional permeate the system produces for non-production operations, such as BACKPULSE.

The trim flowrate, which is a calculated flow, is added to or subtracted from the influent flowrate. As the average level increases above the setpoint in the membrane tanks, the trim increases causing the overall plant permeate flow demand to increase. When the plant permeate flow demand increases, the Permeate Flow Control Valves for the trains in PRODUCTION are ramped open to increase the plant permeate production which brings the average membrane tank level down. Conversely, if the average membrane tanks level is below the setpoint, the calculated trim flowrate is a negative flow and the overall plant permeate flow demand decreases. The Permeate Flow Control Valves are ramped closed, decreasing permeate production, and the average membrane tanks level increases because the decreased permeate production.

In Auto Setpoint mode, the flow setpoints for trains with a manual (Supervisory) flow setpoint are added together and subtracted from the plant permeate flow demand which includes the level trim. This adjusted plant permeate flow demand is then divided by the number of trains in operation without a

DRAFT

manually entered flow setpoint. This value becomes the net train permeate flow setpoint. A correction factor is calculated to account for the time when the train is not producing water (i.e., Backpulse) and to produce additional water required for backpulsing the train, when trains are being backpulsed. The net train permeate flow setpoint multiplied by the correction factor is then used to calculate the instantaneous flow setpoint for the train. The Permeate Flow Control Valve (20-FCV-301-x) is controlled by the flow PID loop.

In Supervisory Setpoint mode, a flow setpoint may also be entered for each train manually. The supervisor can do this by setting the permeate flowrate for some or all the trains on the OIT.

The PLC maintains the operator entered permeate flow rate or MBR PLC calculated permeate flow rate up to a maximum TransMembrane Pressure (TMP) or a minimum membrane tank level.

Figure 2: Influent Flow, Level Control & Permeate Flow Control Chart

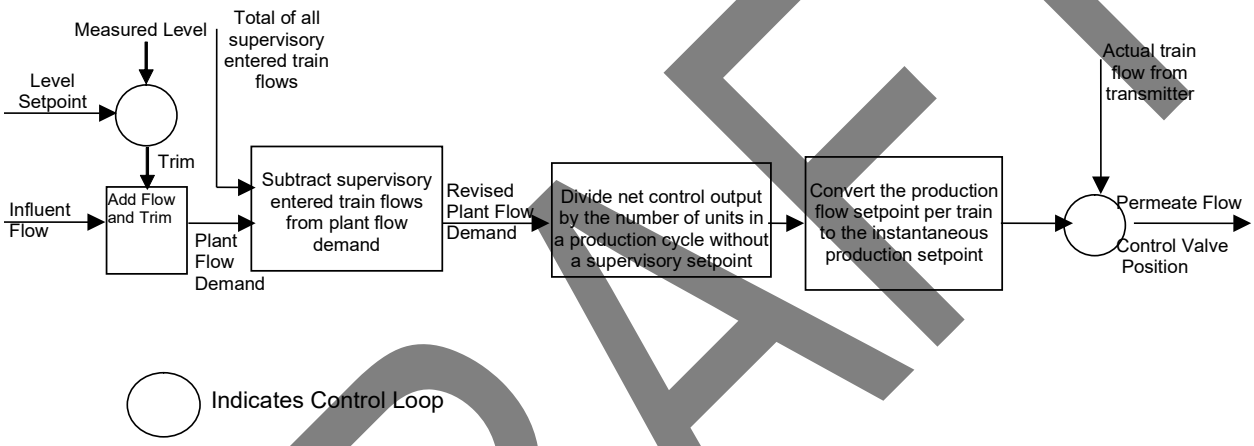

8.3.1.1 Level Trim

The plant permeate demand is the influent flow trimmed to the average membrane tank level.

When the membrane tank is the trim level then the level used is the average level of the membrane tanks in STANDBY, PRODUCTION, BACKPULSE, RELAX.

Tank Level Trim Calculation

To produce a full-range trim flow (negative flow to positive flow).

Trim Flow = FCH x (Level – LC) / (LCH – LC)

FCH is the maximum flow for the plant.

LCH is the level at top of the operating band.

LC is the level at middle of the operating band.

DRAFT

Figure 3 Level Trim

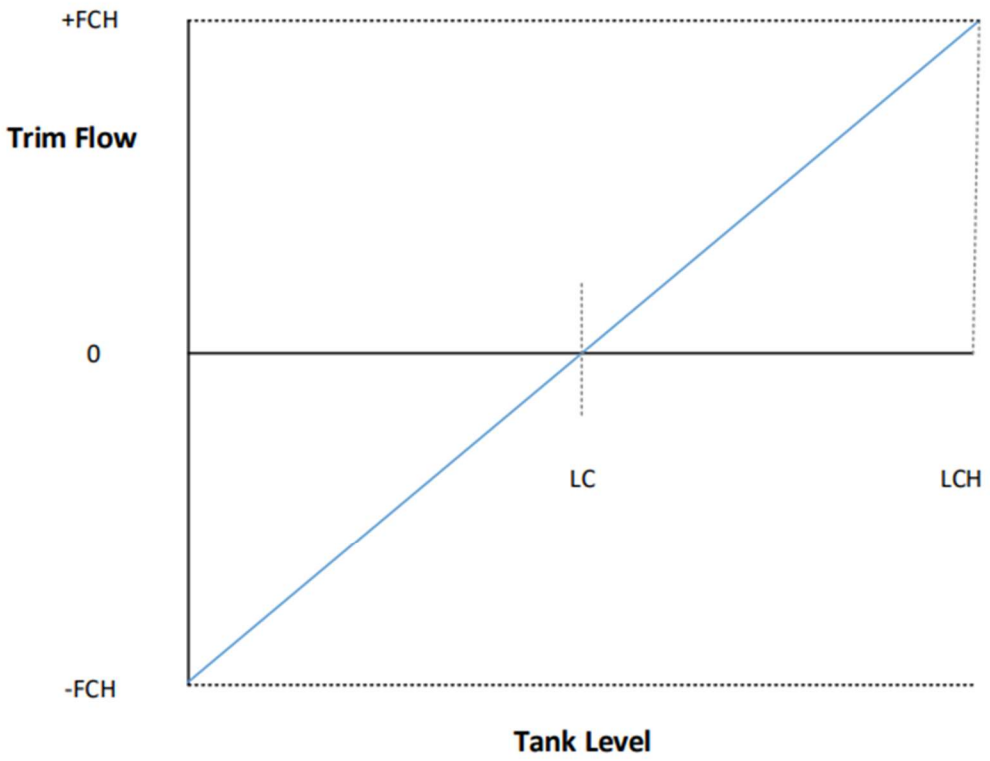

DRAFT

8.3.2 Production TransMembrane Pressure (TMP)

TransMembrane Pressure is the differential pressure across the membranes as measured by a combination of a level transmitter in the membrane tank and a pressure transmitter on the permeate header. In PRODUCTION, the pressure in the permeate header is lower than on the outside of the membranes resulting in a negative value for TMP. During BACKPULSE and backpulsing steps in CIP the water is flowing in the opposite direction so the pressure in the permeate header is higher than the outside of the membranes resulting in a positive value for TMP.

In PRODUCTION, when the TMP low trigger becomes active, the PLC gradually reduces the maximum for the flow PID loop output until the TMP low trigger is not active, (i.e., TMP is less negative). When the TMP low trigger becomes inactive, the maximum value is then gradually increased until the TMP low trigger is active again or continues to increase until the maximum value for the flow control PID loop output equals 100%. This control strategy allows the PLC to vary the permeate flow control valve position to maximize flow while avoiding excessive TMP across the membranes.

8.3.2.1 TransMembrane Pressure (TMP) Calculation

TMP is calculated by using the equation below. During PRODUCTION the value is negative. for backpulses and CIP, it is positive.

$$TMP = \text{Header Pressure} + C \times (A + B - \text{Membrane Tank Level})$$

Where:

A is the height of the pressure transmitter above the top of the membranes.

B is the height to the top of membranes in the membrane tank.

C is a conversion factor (water depth to pressure) = 0.036127 psig/inch.

In PRODUCTION, an increased TMP value means a larger pressure differential because the pressure inside the membranes is lower than outside the membranes. This corresponds to a lower number as expressed in engineering units. Therefore, a high production TMP is expressed as a Pressure Differential Alarm Low.

Figure 4 TMP

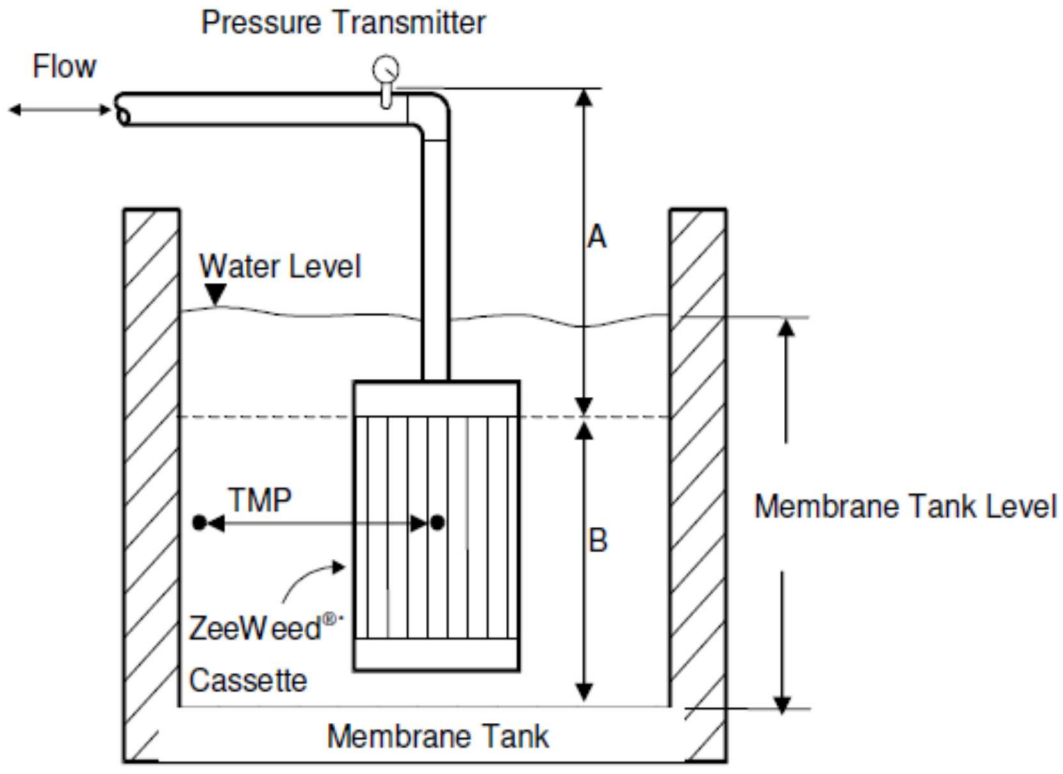

8.3.3 Start & Stop Train Triggers

The number of trains in operation at any given time varies depending on the plant permeate flow demand. As this demand increases, the number of trains in PRODUCTION increases. When a Start train trigger is active, a train switches from STANDBY to PRODUCTION. When a Stop train trigger is active, a train switches from PRODUCTION to STANDBY. The setpoint values for these triggers are defined in the CLC.

A train that has been in the Production Cycle for the longest time has the highest priority to proceed to STANDBY from PRODUCTION. A train that has been in STANDBY the longest time has the highest priority to proceed to PRODUCTION from STANDBY.

8.3.4 Normal Train Rotation

Trains are automatically rotated from PRODUCTION to STANDBY when another train is in STANDBY based on an adjustable cycle timer, typically set to 1 hour. As long as there is at least one train in the Production cycle, the cycle timer operates, and when the timer times out, a Standby request is initiated to stop one train, the train that has operated the longest compared to the other operating trains. This lead train is put to STANDBY at the end of its next Backpulse/Relax, and a train that is in STANDBY starts in PRODUCTION. When at least one train is in STANDBY, Train rotation allows each available train to operate as the lead train for no more than the duration of the cycle timer, such as 1 hour, plus the time remaining in the train's Production cycle when the train is triggered to proceed to STANDBY.

When the cycle timer times out and there is no train available in STANDBY to start in PRODUCTION, the lead train continues in the Production cycle and the request to put a train to STANDBY is maintained, waiting for a train to become available.

If the plant permeate flow demand decreases and triggers a train to STANDBY, the normal train rotation timer resets and resumes timing, or when a train is in STANDBY, the timer resets and resumes timing.

8.3.5 Freeze Protection Enabled

Freeze Protection is used when there is a danger of the permeate headers freezing. When Freeze Protection is selected it replaces Train Rotation. Freeze Protection only works as long as there is demand for at least one train to be in the Production cycle.

The PLC is programmed to force a train, which is in STANDBY for more than 30 minutes to go to PRODUCTION (this train stays in the Production cycle for at least 200 seconds) another train in the Production cycle switches to STANDBY.

After 200 seconds, the PLC checks all Standby trains and selects the train, which has more than 30 minutes standby time and the highest standby time to repeat the same process again, one train at the time. The timers are operator adjustable at the OIT. The number of trains in the Production cycle is still controlled by the start/standby triggers. There are buttons on the OIT to select either Enable Freeze Protection or Enable Train Rotation.

During this switching time the request for the number of running blowers is held constant.

For normal train rotation select the Train Rotation button. The train rotation is controlled by Train Rotation Time SP value.

For Freeze Protection select the Freeze Rotation button. If the All-Day button is selected, then freeze rotation occurs continuously. If the Timed button is selected, then it starts at the start hour and finishes at the stop hour. This rotation is controlled by Rotation Standby Duration and Rotation Train Min. Time in Production setpoints.

DRAFT

8.4 UF Analog Control

8.4.1 Membrane Tank Inlet Valve

The Membrane Tank Inlet Gate is open continuously in PRIME, STANDBY, PRODUCTION, RELAX, BACKPULSE and MAINTENANCE CLEAN and in some steps of NEUTRALIZATION.

8.4.2 Membrane Aeration Control

There are 5 membrane aeration blowers, designated as 4 duty blowers and 1 standby blower. Blower duty is alternated according to an operator entered run time. (Blower duty is alternated by the blower master control panel). The blowers supply low pressure air into a common air header for all the UF trains. This common air header then divides into multiple air headers to the membrane tanks.

For further details on blower operation, refer to the SC and CLC for the occurrence and number of blowers to be running at any given time.

The blower's VFD varies the volume of air through the blower. The PLC uses the sum of the trains air flow demand to determine the speed of the blower using a lookup table.

The speed of the blower is controlled by a flow PID loop. The process variable is a flow meter on the common air discharge header.

The PLC starts and stops blowers as necessary to maintain the desired air flow. All the blowers operate at the same speed when running.

8.4.2.1 Aeration

UF membranes are aerated in PRODUCTION, BACKPULSE, RELAX, intermittently in STANDBY and some steps of MAINTENANCE CLEAN & RECOVERY CLEAN & NEUTRALIZATION.

When a train is in a step with an aeration demand, the aeration isolation valve for that train is open.

The PLC automatically determines when the UF trains run in High Flow Aeration or Low Flow. The change from High to Low aeration only occurs when STANDBY aeration timer (30-minute) times out and all the following conditions are true:

1. The plant is enabled to operate in Low Flow Aeration.
2. The net permeate flow setpoints for all trains in the Production Cycle are below the design value for the membranes.
3. All the trains in the production cycle have resistance calculation value which permits Low Flow Aeration.

The change from Low to High aeration occurs when standby aeration timer (30-minute) times out and any of the following conditions are true:

1. The net permeate flow setpoint for any train in the production cycle is above the design value for the membranes. OR
2. Any train in the production cycle has resistance calculation value which does not permit Low Flow Aeration.
3. High Flow Aeration Twice Daily Frequency is active.

Or

DRAFT

- When any train in the production cycle has a flow greater than average day design value for the membranes for five minutes.

Or

- Low Flow Aeration is disabled by the button on the OIT - then immediately.

The resistance calculation runs from the last step of either BACKPULSE OR RELAX state to the first step of either BACKPULSE OR RELAX state for production cycle for each train. The result of each train's resistance calculation is saved for the last complete train's production cycle.

If any of these trains in the production cycle require high flow aeration, then all the trains are aerated in high flow aeration.

When the standby aeration timer (30 minutes) times out, the membrane aeration demand (i.e., # of blowers and /blower speed) is calculated for the standby trains and operating trains, to minimize start stops on the blowers.

If an aeration isolation valve is requested to close and fails to close, aeration continues, and the train does not proceed to Standby due to an active Standby Trigger. An alarm is triggered to alert the operator. If an aeration isolation valve fails to open, the train is shutdown to prevent fouling of the membranes due to inadequate air scouring.

Table 5: Membrane Aeration Chart

High Flow Aeration	Low Flow Aeration	Number of trains requiring aeration	Number of Blowers without VFD	Number of Blowers with VFD	Total Required Air Flow ICFM	Blower with VFD required Air flow	Motor Speed %
✓		1	1		1492		N/A
✓		1		1	1492	1492	TBD
	✓	1		1	746	746	TBD
✓		2	2		2984		N/A
✓		2	1	1	2984	1492	TBD
✓		2		2	2984	1492	TBD
	✓	2	1		1492		N/A
	✓	2		1	1492	1492	TBD
✓		3	3		4476		N/A
✓		3	2	1	4476	1492	TBD
✓		3	1	2	4476	1492	TBD
	✓	3	2		2238 (provided		N/A

DRAFT

High Flow Aeration	Low Flow Aeration	Number of trains requiring aeration	Number of Blowers without VFD	Number of Blowers with VFD	Total Required Air Flow ICFM	Blower with VFD required Air flow	Motor Speed %
					air flow is 2984)		
	✓	3	1	1	2238	746	TBD
	✓	3		2	2239	1119	TBD
✓		4	4		5968		N/A
✓		4	3	1	5968	1492	TBD
✓		4	2	2	5968	1492	TBD
	✓	4	2		2984		N/A
	✓	4	1	1	2984	1492	TBD
	✓	4		2	2984	1492	TBD

8.4.3 Recirculation Flow Control

The RAS/WAS/drain Pump for the train transfers mixed liquor from the membrane tank to the bioreactor splitter box. The RAS pumps are configured to operate as one duty per train.

The RAS flow setpoint is an operator adjustable ratio based on the net train permeate flow setpoint, which the PLC calculates. The speed of the RAS/WAS/drain pump is controlled by a flow PID loop. As the net train permeate flow setpoint increases the RAS flow demand increases, causing the RAS/WAS/drain pump(s) to speed up.

The RAS/WAS/drain pumps operate continuously during PRODUCTION, BACKPULSE, RELAX. (If there is an anoxic zone one RAS pump must operate continuously in STANDBY in addition to intermittent RAS recirculation)

8.4.3.1 Standby Recirculation

When trains are in STANDBY, intermittently the RAS is recirculated. This RAS recirculation is controlled by the same timers used in Standby Aeration.

Standby trains are intermittently aerated based on a duration timer and a frequency timer. When the frequency timer times out, the Standby trains are aerated, and RAS is circulated through the membrane tank one after another. The aeration and RAS circulation is controlled by the setpoint of the duration timer.

When none of the trains are in PRODUCTION, BACKPULSE, RELAX, then the RAS/WAS/drain pump for the train with the highest starting priority in STANDBY runs continuously. This operation is in addition to the intermittent RAS recirculation.

DRAFT

8.4.4 Sodium Hypochlorite Cleaning Equipment

Sodium hypochlorite is used to remove organic contaminants from the membranes. The Veolia PLC requests one sodium hypochlorite pump, 23-P-101-A or B to run during MAINTENANCE CLEANS or RECOVERY CLEANS. The pump injects chemical to the backpulse water in specific steps during the cleaning procedure. The pumps are configured as one duty and one standby. A flow meter on the discharge of the pumps measures the chemical flow rate. The speed of the pump is controlled using a PID loop to provide a target chemical flow rate, with separate flow setpoints for MAINTENANCE CLEAN and RECOVERY CLEAN. The chemical flow rate provides the required chemical concentration in the chemical dosing steps. A bypass valve on the pump discharge line opens during RECOVERY CLEAN, to enable a higher flow rate from the pump. The chemical flow is totalized during cleans and the volume injected is displayed on the OIT.

The sodium hypochlorite tank level is monitored with a level transmitter.

If low level alarm is active, then the sodium hypochlorite pumps are interlocked. A MAINTENANCE CLEAN continues steps while in a RECOVERY CLEAN the train proceeds to the first fault step.

8.4.5 Citric Acid Cleaning Equipment

Citric acid is periodically used to remove inorganic contaminants from the membranes such as calcium carbonate, manganese, and iron compounds. The Veolia PLC requests one citric acid pump, 23-P-301-A or B to run during MAINTENANCE CLEANS or RECOVERY CLEANS. The pump injects chemical to the backpulse water in specific steps during the cleaning procedure. The pumps are configured as one duty and one standby. A flow meter on the discharge of the pumps measures the chemical flow rate. The speed of the pump is controlled using a PID loop to provide a target chemical flow rate, with separate flow setpoints for MAINTENANCE CLEAN and RECOVERY CLEAN. The chemical flow rate provides the required chemical concentration in the chemical dosing steps. A bypass valve on the pump discharge line opens during RECOVERY CLEAN to enable a higher flow rate from the pump. The chemical flow is totalized during cleans and the volume injected is displayed on the OIT.

The citric acid tank level is monitored with a level transmitter.

If low level alarm is active, then the citric acid pumps are interlocked. A MAINTENANCE CLEAN continues steps while in a RECOVERY CLEAN the train proceeds to the first fault step.

9 Integrity Monitoring & Control

In PRODUCTION, integrity of each train is monitored with on-line turbidity meters. Turbidity is displayed but not monitored for alarms when trains are in STANDBY, BACKPULSE, RELAX, MAINTENANCE CLEAN, RECOVERY CLEAN, NEUTRALIZATION.

There are three turbidity alarms used to assist the operator in running the system. One alarm is used to detect a problem that is not a spike and immediately shuts down the train in PRODUCTION. For example, a train is shutdown when the turbidity is above the setpoint, 0.2 NTU, for 2 minutes.

A second alarm is used to detect a spike in turbidity and sets all trains that are in BACKPULSE to RELAX. For example, the alarm is active when the turbidity is above the setpoint, 5 NTU, for 10 seconds. The alarm also skips all scheduled MAINTENANCE CLEANS until the turbidity alarm

DRAFT

condition no longer exists. After the turbidity alarm condition clears, the Maintenance Cleans are completed as scheduled, but the BACKPULSE must be manually selected by the operators, if required.

The third alarm also detects turbidity spikes but at a lower setpoint and is used to notify the operator of a potential problem which needs to be addressed. For example, the alarm is active when the turbidity is above the setpoint, 0.5 NTU for 60 seconds.

The turbidity alarm setpoints and the time delays, before the alarms become active, are adjustable at the OIT. For further details consult the CLC.

10 Sludge Wasting

The operator is required to waste sludge from the membrane basins in order to maintain good membrane performance. The operator should analyze the sludge to ensure a mixed liquor concentration in the membrane tanks is less than 10,000 mg/L, for example, to maximize membrane performance.

At the OIT, the operator enters

- enables wasting
- start time
- the total volume of sludge to waste for the day, start time.

When the time of day is reached, sludge wasting is started. A sludge isolation valve opens to direct waste to the sludge handling facility and the flow is totalized. When the total volume of sludge wasted reaches the setpoint, the valve is closed, and the flow totalizer is reset to zero at midnight.

11 Air Compressor Control

The system comes with two air compressors and two refrigerated air dryers. The air compressors provide compressed air for all the pneumatic actuated valves and ejectors in the Veolia supplied system.

The PLC enables one air compressor at a time during normal operation. The air compressors alternate on a pre-defined period, which is operator adjustable, or alternate when selected by the operator, selectable at the PLC OIT. When an air compressor is enabled, its local pressure switch will control the start and stop of the compressor based on the system pressure. When the system pressure reaches the low setpoint, the switch will trip starting the compressor and when the system pressure reaches the high setpoint, the contact will open stopping the compressor.

If the system pressure falls to 90 psi, either due to a large demand or the Lead (enabled) compressor fails, a low-pressure switch located upstream of the instrument air regulator, activates, and the lag compressor is enabled to start in an attempt to restore air pressure back to normal pressure. Both compressors could be running in this scenario and will turn off when their local pressure switch reaches the shutoff pressure set point. In the event that the system pressure falls below the low low trigger pressure, another pressure switch downstream of the pressure regulator will activate creating a callout alarm and put all trains to Fault step as the actuated valves cannot reliably be operated. Trains will re-start when the low-low pressure switch pressure condition is cleared.

DRAFT

If the enabled (LEAD) compressor experiences a fault an alarm is triggered, and an enable signal will be provided to the LAG compressor. It will stay enabled without rotation of the compressor until the fault is cleared.

Reciprocating compressors have a duty cycle around 70% which means they should not run longer than 42 minutes in any 60-minute period. The controls include an excessive runtime alarm that will occur if one of the compressors is running more than 45 minutes, to alert the Operations staff to check the system.

The supplied air dryers run independently and are not controlled by the PLC. The function of the air dryer is to remove the moisture in the air supply. Excessive moisture could cause pre-mature failure of the valve solenoids. Refer to the Operation & Maintenance Manual for more details.

12 InSight Remote Monitoring

InSight is a paid service that captures and stores plant data from the PLC in the private Veolia cloud in AWS. Data upload can be automated or manual. This data is then transformed into meaningful information, providing the knowledge needed to optimize the plant process and, in some cases, predict upcoming performance trends. With InSight, operators can assess trends and detect problems quickly, allowing them to act to avoid operational interruptions. Our process experts study customer plant data and provide guidance. We assist operating teams with optimization and troubleshooting. InSight is a powerful tool to preserve operations knowledge.

InSight information is available on the web, mobile data, automated reports, and email, which makes it easier to monitor plant operation. InSight users can review historical and current performance, helping them to ensure maximum membrane life and utilization of other equipment.

Additionally, the automated data collection feature reduces the tedious work of entering and reporting the collected data.

InSight data also sets the foundation for our Veolia advanced analytics tools which use machine learning and artificial intelligence technologies to predict future events.

13 Technical Support

Veolia Water Technical Support:

North America (toll free): 1-866-271-5425

Outside North America: 1-905-469-7723

Email: technicalsupport@veolia.com

This information is also located on the power-up (Main) screen of OIT.

DRAFT

This page intentionally left blank.

DRAFT

Veolia Water Technologies
Contact us:
www.veoliawatertechnologies.com

*Trademark of Veolia; may be registered in one or more countries. ©2023 Veolia. All rights reserved. Nov-23

VEOLIA Project # : 510464
Transmittal # : CTR-0004

VEOLIA Water Technologies & Solutions

Client Outgoing Transmittal Document

TO : dsorvillo@mhepc.com, jzajac@mhepc.com, msickler@mhepc.com	CC : darren.preete@veolia.com, robert.polo.ext@veolia.com, dillon.vijan@veolia.com, vtc.vwts.wats.namproj.doccontrol.all@veolia.com, hanumanthaiah.c@veolia.com
Transmittal Method : Insert Transmittal Method Customer PO :	Project Name : Caesars Lane WWTP Project Manager : Darren Preete Project Engineer : Priscilla Oloruntoba

Issue Date : 03-Dec-2024 **Transmittal # :** CTR-0004

Description : Mechanical Transmittal

Reference Notes :

Submit all returns by email to the VEOLIA Document Control Department at vtc.vwts.wats.namproj.doccontrol.all@veolia.com

VEOLIA Doc #	Rev	Document Title	Issued For	Return Date
510464-WTS-ME-667-1010-DA-001	A	General Arrangement - MEMBRANE CONCRETE TANK	FA	17-Dec-2024
510464-WTS-ME-MAT-MISC-DT-001	C	Cutsheet Package	FA	17-Dec-2024
510464-WTS-ME-SYS-EN10-BQ-001	C	Equipment BOM	FA	17-Dec-2024
510464-WTS-PR-SYS-EN11-DI-001	D	Process Flow Diagram (PFD)	FA	17-Dec-2024
510464-WTS-PR-SYS-EN21-DS-100	D	P&ID TITLE PAGE	FA	17-Dec-2024
510464-WTS-PR-SYS-EN21-DS-102	D	P&ID - Blower - Membrane Blower	FA	17-Dec-2024
510464-WTS-PR-SYS-EN21-DS-103	D	P&ID - Bioreactor	FA	17-Dec-2024
510464-WTS-PR-SYS-EN21-DS-104	D	P&ID - Primary Membrane Tank	FA	17-Dec-2024
510464-WTS-PR-SYS-EN21-DS-105	D	P&ID - PERMEATE SIPHON & ASSOC EQUIPMENT	FA	17-Dec-2024
510464-WTS-PR-SYS-EN21-DS-106	D	P&ID - CIP / BP SYSTEM	FA	17-Dec-2024
510464-WTS-PR-SYS-EN21-DS-109	D	P&ID - EJECTOR ASSEMBLY	FA	17-Dec-2024
510464-WTS-PR-SYS-EN21-DS-110	D	P&ID - RAS/WAS/DRAIN PUMP	FA	17-Dec-2024
510464-WTS-PR-SYS-EN21-DS-111	D	P&ID - CHEMICAL DOSING SYSTEM	FA	17-Dec-2024
510464-WTS-PR-SYS-EN21-DS-112	D	P&ID - AIR COMPRESSOR	FA	17-Dec-2024

These documents contain information proprietary to VEOLIA. They are submitted in confidence and are to be used solely for the purpose to which they are furnished and returned upon request. These documents and such information are not to be reproduced, transmitted, disclosed or used otherwise in whole or in part without the written authorization of VEOLIA. **Please remit all document(s) upon expected return date to avoid any production delays.**

VEOLIA Issued For Codes: FA - For Approval, **FI -** For Information, **FRC -** For Review and Comment, **IFC -** For Construction, **AB -** As Built, **AS -** As Shipped, **FV -** Void

**********End of Transmittal**********

VEOLIA WTS
CONTROLLED DOCUMENT

REV	DESCRIPTION	WRITTEN BY	CHECKED BY	APPROVED BY	DATE DD-MM-YY
A	ISSUED FOR APPROVAL	XC	JS	RP	01-12-2024

DOCUMENT TYPE:	VEOLIA DOCUMENT NUMBER:					
	CONTRACT	ISSUER	DISCIPLINE	PRODUCT	PHASE	TYPE	CHRONO
GENERAL ARRANGEMENT FOR MEMBRANE CONCRETE TANK	**510464**	**WTS**	**ME**	**667**	**1010**	**DA**	**001**

MECHANICAL TRANSMITTAL

PROPRIETARY AND CONFIDENTIAL : THIS DOCUMENT AND ALL INFORMATION AND KNOWLEDGE CONTAINED OR REFERRED HEREIN ARE THE CONFIDENTIAL AND PROPRIETARY PROPERTY OF VEOLIA AND

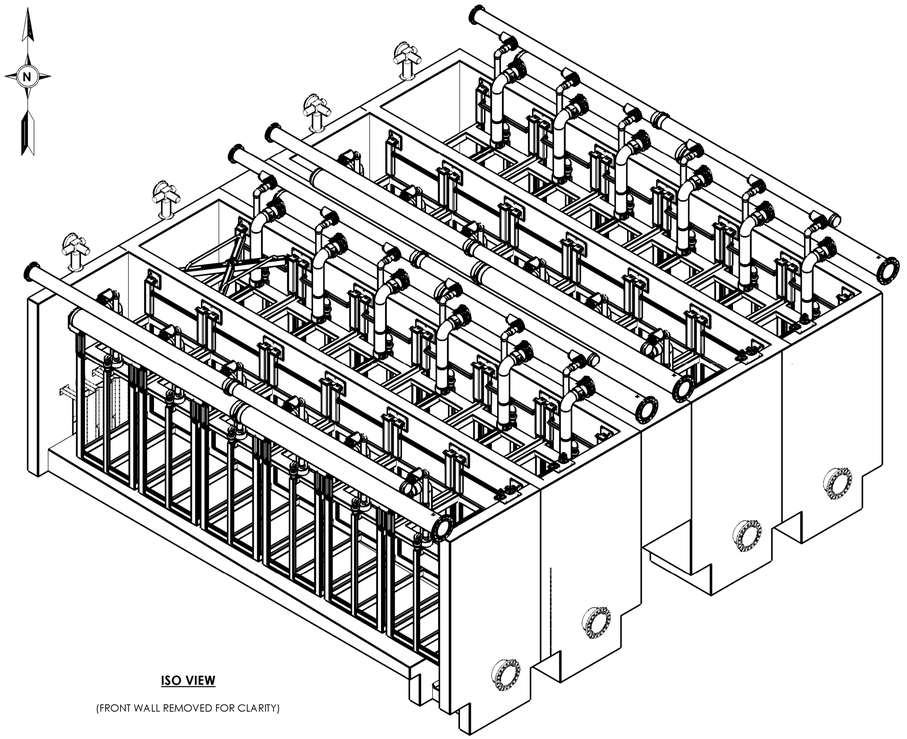

ISO VIEW

(FRONT WALL REMOVED FOR CLARITY)

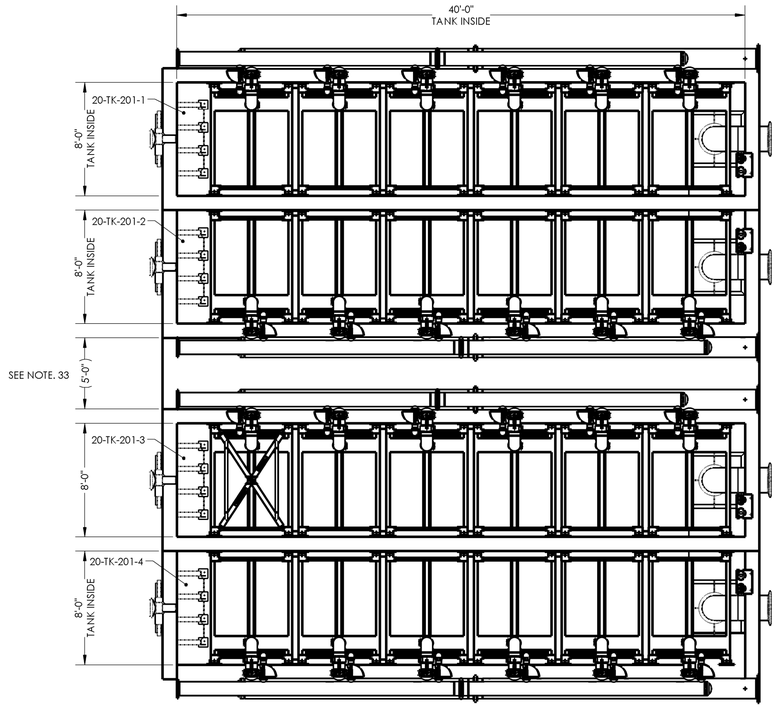

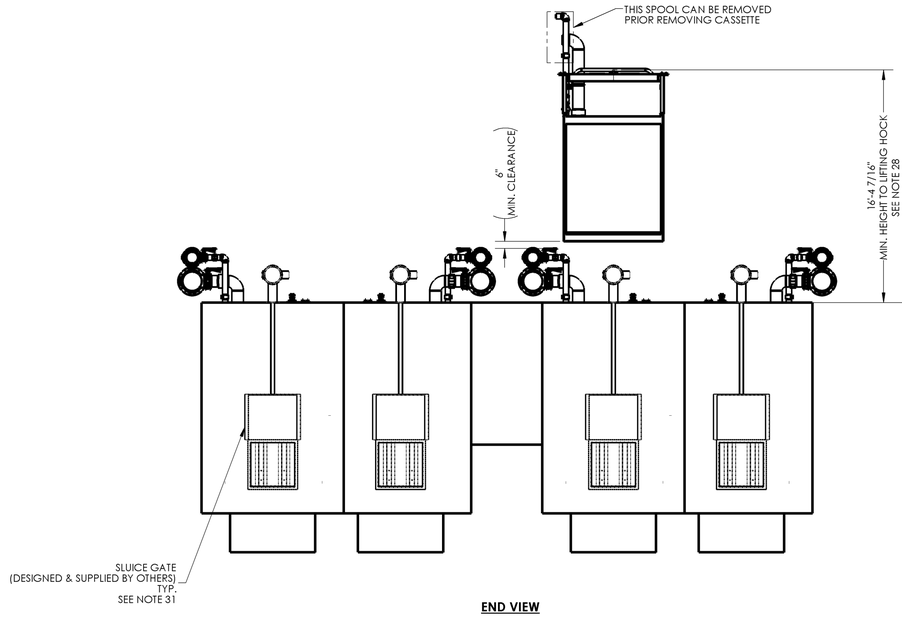

END VIEW

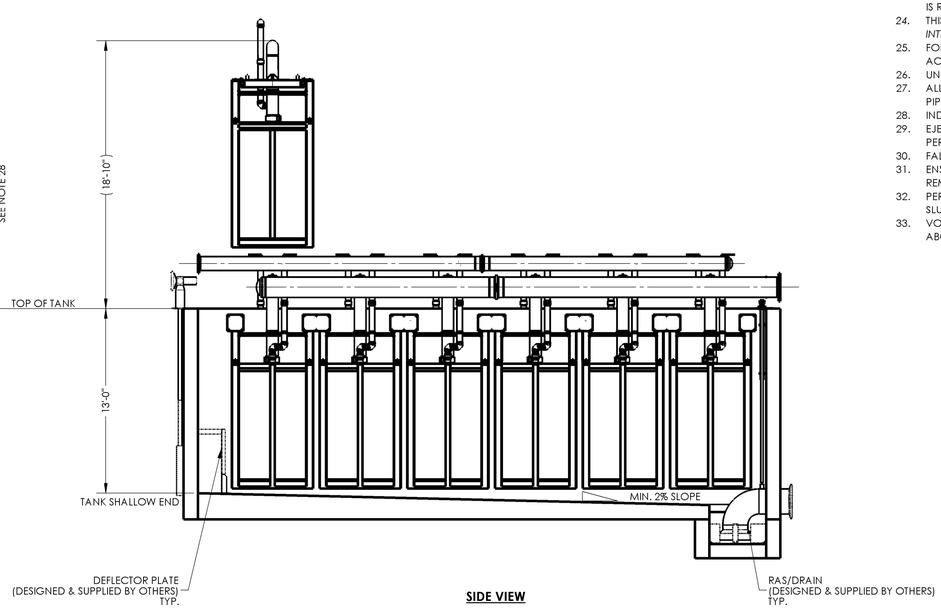

SIDE VIEW

(FRONT WALL REMOVED FOR CLARITY)

NOTES:

1. UNLESS NOTED OTHERWISE, DIMENSIONS GIVEN FOR INSTALLATION HAVE THE FOLLOWING TOLERANCES: DIMENSIONS TO INTERFACE/NOZZLES: ± 3/8"; ANGLES: ± 0.5°. ALL DIMENSIONS SHOWN ARE FINAL DIMENSIONS INSIDE THE TANK.
2. DESIGN DATA:
   • EST. CASSETTE SHIPPING WEIGHT: 5,313 LBS [2,410 KG]
   • EST. CASSETTE MAX. WEIGHT (SLUDGED): 9,537 LBS [4,326 KG] (INCLUDING LIFTING MODULE)
   • RECOMMENDED CRANE LIFTING CAPACITY: 10,000 LBS [4,535 KG]. THE VEOLIA DESIGN GUIDELINE LISTED BELOW.
3. USE CRANE SCALE IF CASSETTE'S WEIGHT IS UNKNOWN. THE VEOLIA CRANE SCALE USE GUIDE LISTED BELOW.
4. CRANE HOIST CHAINFALL SHOULD BE IN LINE WITH CASSETTE CENTERLINE, FOR BOTH ALONG AND ACROSS THE TANK, BEFORE LIFTING CASSETTE.
5. LIFTING MODULE IS NOT TO BE LEFT INSIDE MEMBRANE TANK DURING OPERATION. A STORAGE SPACE WILL BE REQUIRED WHEN LIFTING MODULE IS NOT IS USE.
6. FOR SCOPE OF VEOLIA SUPPLIED EQUIPMENT AND TECHNICAL DATA REFER TO THE P&IDS AND EQUIPMENT BILL OF MATERIAL.
7. DESIGN, SUPPLY AND INSTALLATION OF MEMBRANE TANK DISTRIBUTION CHANNEL, SLUICE AND WEIR GATES, EMERGENCY OVERFLOW, AND HANDRAILS ON TOP OF THE TANKS ARE BY OTHERS. THESE ARE NOT SHOWN FOR CLARITY.
8. DESIGN AND SUPPLY OF MEMBRANE TANK COVERS ARE BY OTHERS (TANK MUST BE VENTED). THE VEOLIA DESIGN GUIDELINE IS LISTED BELOW. WALL BRACKET'S ELEVATION SHOULD BE COORDINATED WITH TANK COVER'S THICKNESS.
9. DO NOT PUT THE CASSETTE ON TOP OF TANK COVER UNLESS THE TANK COVER WAS DESIGNED TO TAKE SLUDGED CASSETTE WEIGHT.
10. DESIGN AND SUPPLY OF PIPE SUPPORTS BY OTHERS.
11. INFLUENT DEFLECTOR PLATE IS REQUIRED TO PREVENT DIRECT IMPACT OF FEED WATER ON CASSETTES. THE VEOLIA DESIGN GUIDELINE IS LISTED BELOW.
12. MEMBRANE TANK COVERS DESIGN TO BE COORDINATED WITH VEOLIA TEAM FROM INITIAL STAGES OF COVER DESIGN. THE VEOLIA DESIGN GUIDELINE IS LISTED BELOW.
13. THE FOLLOWING DESIGN GUIDELINES ARE AVAILABLE FROM VEOLIA UPON REQUEST:
    • E000001-WTS-ME-T02-8522-SG-001 - MEMBRANE TOLERANCES.
    • E000001-WTS-ME-T02-8522-SG-016 - ZEEWEED 500D SERIES MEMBRANE LIFTING EQUIPMENT GUIDELINE
    • E000001-WTS-ME-T02-8522-SG-013 - BAFFLE DESIGN
    • CRANE SCALE INSTALLATION AND USE (IN SERV-0083 ZW500 CASSETTE SOLIDS REMOVAL PROCEDURE).
    • E000001-WTS-ME-SYS-EN22-SG-017 - MEMBRANE TANK COVERS DESIGN GUIDELINE.
14. ANY ANCHOR BOLT TO BE MINIMUM 4" AWAY FROM CONCRET EDGES.
15. FOR INTERIOR TANK WALLS THAT HAVE BRACKETS ON BOTH SIDES, IF THE ANCHOR EMBEDMENT PLUS TWO TIMES THE ANCHOR DIAMETER IS GREATER THAN HALF OF TANK WALL THICKNESS, THEN THRU-WALL THREADED RODS MUST BE USED TO FIT 0.6875" DIA. HOLE (RODS TO BE SUPPLIED BY OTHERS)
16. PIPING MATERIAL:
    • AIR: SCH. 10, 316L SS AND SCH. 80, CPVC
    • PERMEATE: SCH. 10, 316L SS
17. GASKET MATERIAL:
    • SS LINES: EPDM
18. FASTENER MATERIAL:
    • 316SS
19. ALL DIMENSIONS IN INCHES.
20. DIMENSION SHOWN IN PARENTHESIS (XX) ARE FOR REFERENCE ONLY.
21. CONTRACTOR/SHOP SHALL VERIFY ALL DIMENSIONS PRIOR TO INSTALLING PIPING/EQUIPMENT.
22. REFERENCE - PIPING & INSTRUMENTATION DIAGRAM: 510464-WTS- PR-SYS-EN21-DS-104
23. SUMP DESIGN IS BY OTHERS. DIMENSIONS ARE SHOWN FOR REFERENCE ONLY. TO ENSURE FULL TANK DRAIN, VORTEX BREAKER IS RECOMMENDED. FOR SUCTION LOSSES REDUCTION, A BELLMOUTH FITTING CAN BE USED. LONG RADIUS ELBOW IS RECOMMENDED IF FEASIBLE. INTRODUCTION OF ANY OF THESE FEATURES MAY REQUIRE THE SUMP SIZE TO INCREASE.
24. THIS SPOOL IS A PLACEHOLDER FOR RECOMENDED VORTEX BREAKER AND OPTIONAL FLAIR (BELLMOUTH). *SYSTEM INTEGRATOR* TO DETERMINE DESIGN AND DIMENSIONS OF ANY OF THESE COMPONENTS, AS APPLICABLE.
25. FOR THE SCENARIO OF RAS PIPE PASSING BETWEEN CASSETTE FRAME AND TANK WALL, TANK LENGTH WILL INCREASE ACCORDINGLY. LEAVE A MINIMUM OF 4" BETWEEN CASSETTE FRAME AND VERTICAL PIPE SECTION.
26. UNLESS NOTED OTHERWISE, ALL FLANGE BOLT HOLES TO BE STRADDLE MAJOR CENTERLINES.
27. ALL MATING FLANGES SHALL HAVE PARALLEL FACE WITH NO OFFSET BETWEEN PIPE CENTERLINES. COLD SPRINGING OF PIPING DURING INSTALLATION IS NOT ALLOWED.
28. INDICATED LIFTING HEIGHT IS BASED ONLY ON COMPONENTS SHOWN ON THIS DRAWING.
29. EJECTOR TO BE CONNECTED TO A PIPE OVERT AT PIPE'S HEIGHEST POINT BETWEEN PERMEATE HEADER TIE POINT AND PERMEATE PUMP SUCTION.
30. FALL PROTECTION PROVISIONS ARE IN SCOPE OF OTHERS.
31. ENSURE SLUICE GATE VALVE DOES NOT INTERFERE WITH THE CASSETTE TRAVELING IN BOTH DIRECTIONS WHILE BEING REMOVED FROM INSIDE THE TANK.
32. PERMEATE/AIR HEADERS, PERMEATE/AIR DROP LEGS, CASSETTE PERMEATE/AIR ISOLATION VALVES , DEFLECTOR PLATE AND SLUICE GATE VALVES AND RAS/DRAIN INLET ELBOWS ARE BY OTHERS.
33. VOID SPACE (OR A THICKER WALL) IS REQUIRED IN BETWEEN PAIRS OF TANKS TO ACCOMMODATE TWO SETS OF HEADERS ABOVE, DIMENSION (5 FEET) IN PLANE VIEW IS FOR REFERENCE ONLY AND CAN BE REDUCED.

VEOLIA WTS CONTROLLED DOCUMENT

REV	DESCRIPTION	ECO	DWN	APPR	APPR	DATE
A	INITIAL DESIGN		XC	JS	RP	08 FEB 23

PROPRIETARY AND CONFIDENTIAL: THIS DRAWING AND ALL INFORMATION AND KNOWLEDGE CONTAINED OR REFERRED HEREIN ARE THE CONFIDENTIAL AND PROPRIETARY PROPERTY OF VEOLIA AND AS SUCH ARE INSTRUMENTS OF SERVICE FOR USE SOLELY WITH RESPECT TO THIS PROJECT. THESE INSTRUMENTS OF SERVICE SHALL NOT BE REPRODUCED, TRANSMITTED, DISCLOSED OR USED OTHERWISE IN WHOLE OR IN PART, WITHOUT PRIOR WRITTEN AGREEMENT BY VEOLIA AND MUST BE IMMEDIATELY RETURNED OR DESTROYED UPON REQUEST.

TOLERANCES UNLESS NOTED
DECIMALS .X .XX .XXX
ANGLES °
FRAC

VEOLIA

CUSTOMER INFORMATION: CAESARS LANE WWTP

GENERAL ARRANGEMENT
MEMBRANE CONCRETE TANK
(4 TRAINS - ZW500EV)

DRAWING NUMBER	REVISION
510464-WTS-ME-667-1010-DA-001	A
REF.:	DOC. OWNER:

PROJECT NO.	PART/MATERIAL NO.	SCALE	SIZE	SHEET
510464		1:64	D	1 OF 2

LAST SAVED: Thursday, February 9, 2023 3:22:14 PM

FILE LOCATION: C:\SWPDM\NAM\510464 - CAESARS LANE WWTP\2. Mechanical Drawings\

EJECTOR ASSEMBLY

ONE PER TRAIN
TYP. FOR ALL OF FOUR (4) TRAINS
TAG "X" = 1, 2, 3, 4

EJECTOR ARE LOOSE SHIPED
SEE NOTE 29 ON SHT. 1 FOR INSTALLATION POSITION

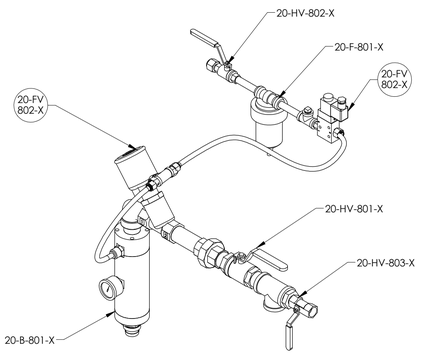

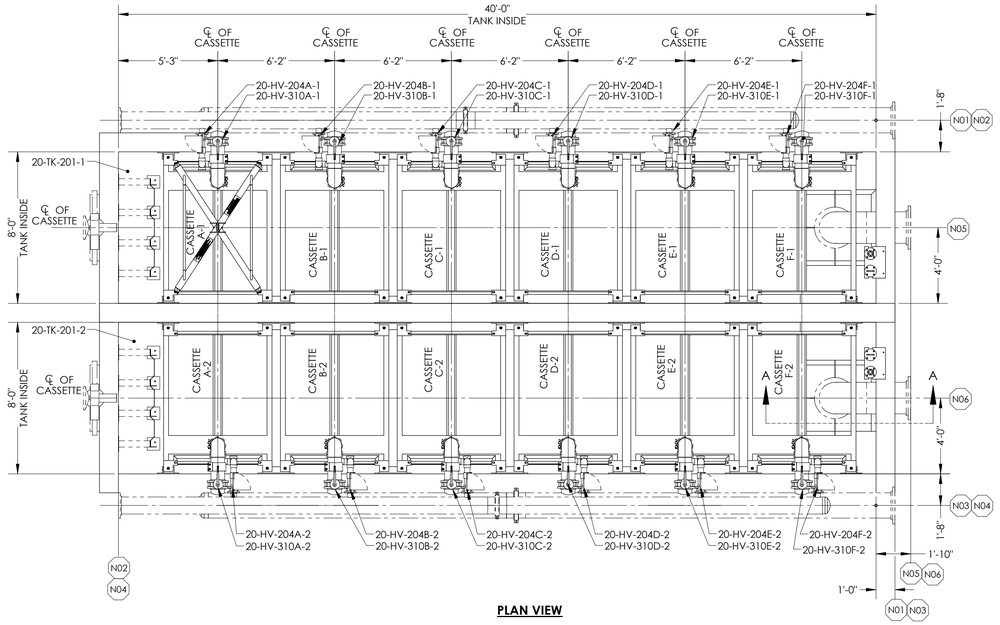

PLAN VIEW

NOZZLE SCHEDULE

NOZZLE	DESCRIPTION	TYPE	SIZE
N01	PERMEATE/BACKPULSE TO/FROM PUMP (TRAIN1)	150# RF FLG	16"
N02	AIR FROM MEMBRANE BLOWERS (TRAIN1)	150# RF FLG	10"
N03	PERMEATE/BACKPULSE TO/FROM PUMP (TRAIN2)	150# RF FLG	16"
N04	AIR FROM MEMBRANE BLOWERS (TRAIN2)	150# RF FLG	10"
N05	RAS/TANK DRAIN (TRAIN1)	150# RF FLG	20"
N06	RAS/TANK DRAIN (TRAIN2)	150# RF FLG	20"

NOTE:
1. ALL PIPINGS ARE BY OTHERS.
2. PIPINGS ELEVATION & TIE-POINTS OF ALL THE NOZZLES ARE FOR REFERENCE ONLY, REFER TO P&ID: 510464-WTS-PR-SYS-EN21-DS-104.
3. ONLY TRAINS 1 AND 2 ARE SHOWN ON THIS PAGE. TRAINS 3 AND 4 ARE IDENTICAL EXCEPT FOR THE TAG NUMBERS.

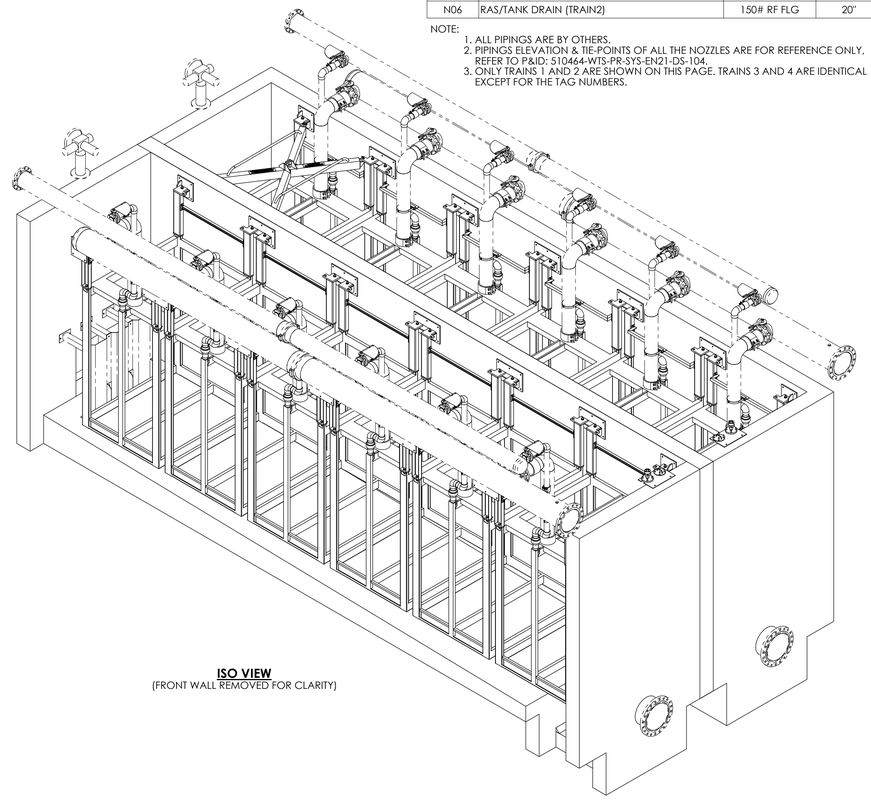

ISO VIEW
(FRONT WALL REMOVED FOR CLARITY)

SUMP & RAS PIPE DETAIL

(FOR REFERENCE ONLY)
(SEE NOTE 23 TO 25 ON SHT. 1)

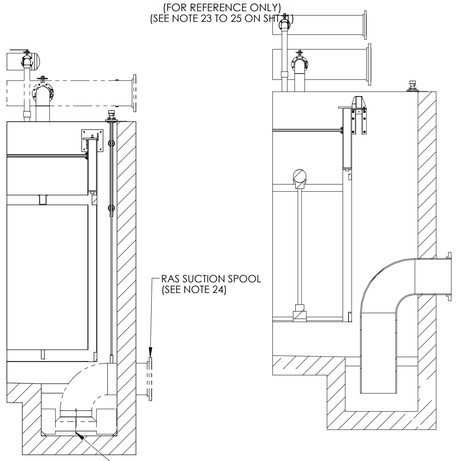

SECTION A-A

SECTION A-A
FOR NOTE 25 ON SHT. 1
N.T.S.
(OPTION)

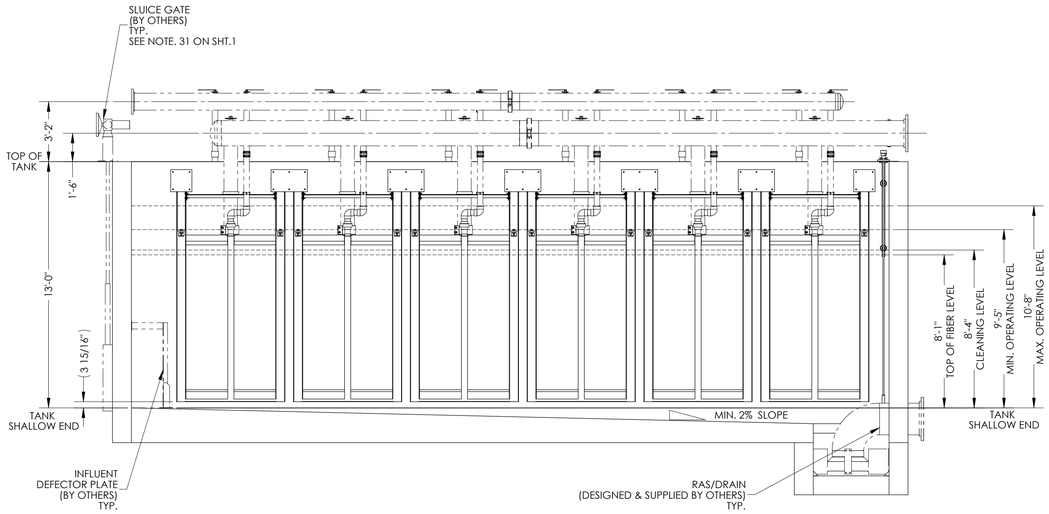

SIDE VIEW

(FRONT WALL REMOVED FOR CLARITY)

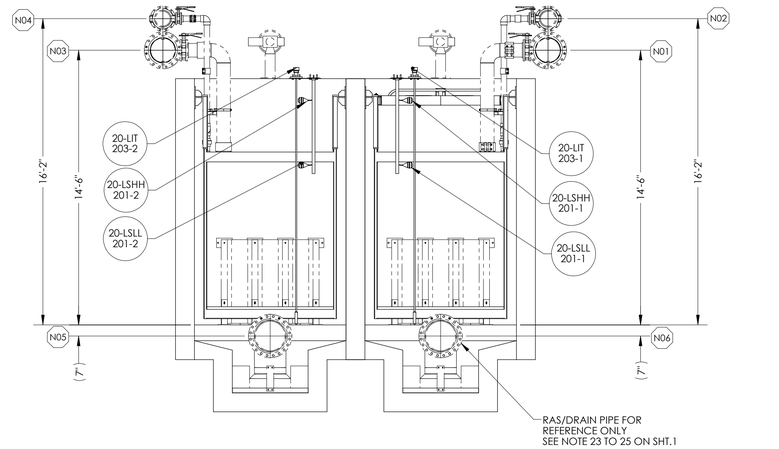

END VIEW

(SIDE WALL REMOVED FOR CLARITY)

REV	DESCRIPTION	ECO	DWN	APPR	APPR	DATE
A	INITIAL DESIGN		XC	JS	RP	08 FEB 23

PROPRIETARY AND CONFIDENTIAL: THIS DRAWING AND ALL INFORMATION AND KNOWLEDGE CONTAINED OR REFERRED HEREIN ARE THE CONFIDENTIAL AND PROPRIETARY PROPERTY OF VEOLIA AND AS SUCH ARE INSTRUMENTS OF SERVICE FOR USE SOLELY WITH RESPECT TO THIS PROJECT. THESE INSTRUMENTS OF SERVICE SHALL NOT BE REPRODUCED, TRANSMITTED, DISCLOSED OR USED OTHERWISE IN WHOLE OR IN PART, WITHOUT PRIOR WRITTEN AGREEMENT BY VEOLIA AND MUST BE IMMEDIATELY RETURNED OR DESTROYED UPON REQUEST.

TOLERANCES UNLESS NOTED
DECIMALS .X .XX .XXX
ANGLES °
FRAC

VEOLIA

CUSTOMER INFORMATION

CAESARS LANE WWTP

GENERAL ARRANGEMENT
MEMBRANE CONCRETE TANK
(4 TRAINS - ZW500EV)

DRAWING NUMBER: 510464-WTS-ME-667-1010-DA-001
REVISION: A
REF.:
DOC. OWNER:
PROJECT NO.: 510464
PART/MATERIAL NO.:
SCALE: 1:48
SIZE: D
SHEET: 2 OF 2

FILE LOCATION: C:\SWPDM\MAM\510464 - CAESARS LANE WWTP\2. Mechanical Drawings\
LAST SAVED: Thursday, February 9, 2023 3:22:14 PM

VEOLIA WTS
CONTROLLED DOCUMENT

REV	DESCRIPTION	WRITTEN BY	CHECKED BY	APPROVED BY	DATE DD-MM-YY
C	ISSUED FOR APPROVAL	RP	RP	RP	01-12-2024
B	ISSUED FOR APPROVAL	RP	RP	RP	30-01-2024
[illegible]	ISSUED FOR APPROVAL	RP	RP	RP	28-03-2023

DOCUMENT TYPE:	VEOLIA DOCUMENT NUMBER:					
	CONTRACT	ISSUER	DISCIPLINE	PRODUCT	PHASE	TYPE	CHRONO
EQUIPEMNT BILL OF MATERIAL	**510464**	**WTS**	**ME**	**SYS**	**EN10**	**BQ**	**001**

MECHANICAL TRANSMITTAL

PROPRIETARY AND CONFIDENTIAL : THIS DOCUMENT AND ALL INFORMATION AND KNOWLEDGE CONTAINED OR REFERRED HEREIN ARE THE CONFIDENTIAL AND PROPRIETARY PROPERTY OF VEOLIA AND AS SUCH ARE INSTRUMENTS OF SERVICE FOR USE SOLELY WITH RESPECT TO THIS PROJECT. THESE INSTRUMENTS OF SERVICE SHALL NOT BE REPRODUCED, TRANSMITTED, DISCLOSED OR USED OTHERWISE, IN WHOLE OR IN PART, WITHOUT PRIOR WRITTEN AGREEMENT BY VEOLIA AND MUST BE IMMEDIATELY RETURNED OR DESTROYED UPON REQUEST.

VEOLIA WTS
CONTROLLED DOCUMENT

510464- CAESAR LANES- EQUIPMENT BILL OF MATERIAL- REV C

S. No	Qty	SAP Part No. OR CFO	Primary Description	Complete Description	Tags	Drawing No.	Cutsheet Binder Tab #
			P&ID MEMBRANE BLOWERS POSITIVE DISPLACEMENT TYPE			510464-DS-102	
1	2	CFO	BLOWER-MEMBRANE,AERZEN, GM 50L, 60 HP (WITH VFD BY OTHERS)	Membrane Aeration Blowers (With VFD By others) Aerzen Generation 5 Blower Package -Pressure - including: Aerzen GM 50L , DN200 Blower Drive Motor - Teco: 60hp, 1800rpm, TEFC, 460V/60Hz Design flow: 1,611 ICFM @ 5.5 Psig Motor protection: 1 Thermistor/ph Base with integrated reactive type discharge silencer Intake filter silencer Hinged motor support as automatic belt tensioning device Set of vibration isolation mounts Narrow v-belt drive with guard - 1 set Spring loaded relief valve Discharge manifold with externally accessible integrated check valve Flexible connector with clamps for schedule 40 pipe, discharge Acoustic Enclosure - Indoor/Outdoor Inlet flexible sleeve -DN 200 (8") for piped air inlet Instruments: Pressure gauge c/w isolation ball valve Dirty filter indicator	20-B-201-A/B 20-F-201-A/B 20-PSV-201-A/B 20-HV-203-A/B 20-PI-203-A/B 20-CV-201-A/B	510464-DS-102 Sheet 1	A03
2	3	CFO	BLOWER-MEMBRANE,AERZEN, GM 50L, 60 HP WITHOUT VFD	Membrane Aeration Blowers (Without VFD) Aerzen Generation 5 Blower Package -Pressure - including: Aerzen GM 50L , DN200 Blower Drive Motor - Teco: 60hp, 1800rpm, TEFC, 460V/60Hz Design flow: 1,611 ICFM @ 5.5 Psig Motor protection: 1 Thermistor/ph Base with integrated reactive type discharge silencer Intake filter silencer Hinged motor support as automatic belt tensioning device Set of vibration isolation mounts Narrow v-belt drive with guard - 1 set Spring loaded relief valve Discharge manifold with externally accessible integrated check valve Flexible connector with clamps for schedule 40 pipe, discharge Acoustic Enclosure - Indoor/Outdoor Inlet flexible sleeve -DN 200 (8") for piped air inlet Instruments: Pressure gauge c/w isolation ball valve Dirty filter indicator	20-B-201-C/D/E 20-F-201-C/D/E 20-PSV-201-C/D/E 20-HV-203-C/D/E 20-PI-203-C/D/E 20-CV-201-C/D/E	510464-DS-102 Sheet 1	A03
3	5	3090315	VALVE-BTFLY,SS,8.00,MAN,LG,150,EPDM,BR	BUTTERFLY VALVE MANUFACTURER: BRAY SERIES: 31-375 VALVE SIZE: 8 IN. MATERIAL: BODY- DUCTILE IRON DISC- 316SS STEM- 416SS SEAT- EPDM CONTROL: MANUAL LEVER CONNECTION: LUG PRESSURE RATING: 150 PSI	20-HV-201-A/B/C/D/E	510464-DS-102 Sheet 1	B03
4	5	3054067	SWITCH-FLOW,Ni-BRS,24VDC,N4,3.3-66ft/s	THERMAL AIR SWITCH FLOW KOBOLD US PN# KAL-8115-C KOBOLD EU PN# KAL-L81N1WKN4 3.3-66 FT/SEC VELOCITY RANGE, 0.5"MNPT PROC.CONNECTION, Ni-PLATED BRASS WETTED PARTS, NYLON HOUSING, 8-LED FLOW TREND, 2-COLOUR LED SWITCH STATUS, NEMA 4, 0.5"NPT CONDUIT CONNECTION, 24V DC POWER SUPPLY, 1-SPDT SWITCH, 120 PSIG MAX. OPERATING PRESSURE, -10 TO +250 DEGREE F. PROCESS TEMPERATURE, +/-1% REPRODUCIBILITY, UP TO 60 SEC. TIME DELAY START UP, UL, CE & CSA APPROVAL IS REQUIRED.	20-FSL-201-A/B/C/D/E	510464-DS-102 Sheet 1	C01

510464- CAESAR LANES- EQUIPMENT BILL OF MATERIAL- REV C

S. No	Qty	SAP Part No. OR CFO	Primary Description	Complete Description	Tags	Drawing No.	Cutsheet Binder Tab #
			P&ID PROCESS BLOWERS POSITIVE DISPLACEMENT TYPE			**510464-DS-102**	
5	3	CFO	BLOWER-PROCESS,AERZEN, GM 90S, 150 HP (WITH VFD BY OTHERS)	Process Aeration Blowers (With VFD by others) Aerzen Generation 5 Blower Package -Pressure - including: Aerzen GM 90S , DN250 Blower Drive Motor - Teco: 150 hp, 1800rpm, TEFC, 460V/60Hz Design flow: 2,038 SCFM @ 9.74 Psig Motor protection: 1 Thermistor/ph Base with integrated reactive type discharge silencer Intake filter silencer Hinged motor support as automatic belt tensioning device Set of vibration isolation mounts Narrow v-belt drive with guard - 1 set Spring loaded relief valve Discharge manifold with externally accessible integrated check valve Flexible connector with clamps for schedule 40 pipe, discharge Acoustic Enclosure - Indoor/Outdoor Inlet flexible sleeve - DN 250 (10") For piped air inlet Instruments: Pressure gauge c/w isolation ball valve Dirty filter indicator	16-B-401-A/B/C 16-F-401-A/B/C 16-PSV-401-A/B/C 16-HV-403-A/B/C 16-PI-403-A/B/C 16-CV-401-A/B/C	510464-DS-102 Sheet 2	A03
6	3	3090316	VALVE-BTFLY,SS,10.0,MAN,LG,150,EPDM,BR	BUTTERFLY VALVE MANUFACTURER: BRAY SERIES: 31-375 VALVE SIZE: 10 IN. MATERIAL: BODY- DUCTILE IRON DISC- 316SS STEM- 416SS SEAT- EPDM CONTROL: GEAR CONNECTION: LUG PRESSURE RATING: 150 PSI	16-HV-401-A/B/C	510464-DS-102 Sheet 2	B03
7	3	3054067	SWITCH-FLOW,Ni-BRS,24VDC,N4,3.3-66ft/s	THERMAL AIR SWITCH FLOW KOBOLD US PN# KAL-8115-C KOBOLD EU PN# KAL-L81N1WKN4 3.3-66 FT/SEC VELOCITY RANGE, 0.5"MNPT PROC.CONNECTION, Ni-PLATED BRASS WETTED PARTS, NYLON HOUSING, 8-LED FLOW TREND, 2-COLOUR LED SWITCH STATUS, NEMA 4, 0.5"NPT CONDUIT CONNECTION, 24V DC POWER SUPPLY, 1-SPDT SWITCH, 120 PSIG MAX. OPERATING PRESSURE, -10 TO +250 DEGREE F. PROCESS TEMPERATURE, +/-1% REPRODUCIBILITY, UP TO 60 SEC. TIME DELAY START UP, UL, CE & CSA APPROVAL IS REQUIRED.	16-FSL-401-A/B/C	510464-DS-102 Sheet 2	C01
	3	3090316 + Limit switch on the open CFO to be created	VALVE-BTFLY,SS,10.0,MAN,LG,150,EPDM,BR PLUS LIMIT SWITCH ON THE OPEN	BUTTERFLY VALVE MANUFACTURER: BRAY SERIES: 31-375 VALVE SIZE: 10 IN. MATERIAL: BODY- DUCTILE IRON DISC- 316SS STEM- 416SS SEAT- EPDM CONTROL: GEAR CONNECTION: LUG PRESSURE RATING: 150 PSI FEATURE: ADDED LIMIT SWITCH ON THE OPEN POSITION	16-HV-400	510464-DS-102 Sheet 2	B03
			P&ID BIOREACTORS			**510464-DS-103**	

510464- CAESAR LANES- EQUIPMENT BILL OF MATERIAL- REV C

S. No	Qty	SAP Part No. OR CFO	Primary Description	Complete Description	Tags	Drawing No.	Cutsheet Binder Tab #
8	3	CFO	ANOXIC MIXER	Sulzer Submersible Mixer,Model #RW6521-A60/12EC (Cast Iron,for Non Classified Area),6kW-571RPM,460/60/3,complete with 580mm propeller,double mechanical seals, bi-metal switches on stator plus Di seal probe,10m Cable. Accessories Included: *Mast Assy /w Floor/Inter/Upper Brkts,304SS (4"x4"SQ Guide Tube by Others) *Shock Absorber *Support Bracket,Shock Absorber,304SS *Power Cable Support Kit,20ft 304SS *Lifting Cable Assy,40ft 316SS *Relay,Heat Seal CA462,115V Accessories: 1 Portable 24"-36" Adjustable Reach 60"H,1000LB Capacity /w Manual Handwinch 3 Socket,Platform,304SS	16-MX-211-1/2/3	510464-DS-103	A13
9	3	CFO	FINE BUBBLE DIFFUSER GRID	SSI, Aeration diffuser grids with AFD270-E Fine Bubble Disc Diffusers with EPDM Membranes. A. Each aeration train consists of two Aerobic zones, zone 1 and zone 2 and each zone is 44.75' (L) X 24' (W) X 20.5' SWD. Aeration Equipment include the following items per each zone: Scope of supply complete with all components from the downstream of air supply line connection (±6" above water level) starting with SS Vanstone and loose follower flange including the drop pipe, which includes the following items: Aerobic zone 1: - 8" Dia. 304SS, Sch. 10 drop pipe (+/-20') c/w (3) 304SS supports and (1) 304SS couplings - 8" Dia. PVC, Sch. 40, Manifold (+/-25') c/w (5) 304SS supports and (1) PVC couplings - 4" Dia. PVC headers (+/- 440') c/w (440) factory installed diffusers (77) 304SS supports and (33) PVC unions - Quantity of 440 of POD270-E diffusers Aerobic zone 2: - 6" Dia. 304SS, Sch. 10 drop pipe (+/-20') c/w (3) 304SS supports and (1) 304SS couplings - 6" Dia. PVC, Sch. 40, Manifol (+/-25') c/w (5) 304SS supports and (1) PVC couplings - 4" Dia. PVC headers (+/- 320') c/w (312) factory installed diffusers (56) 304SS supports and (24) PVC unions - Quantity of 312 of POD270-E diffusers B-The spare parts included are: ●AFD270-E Diffuser Assemblies – 9 ●4” 304SS Supports - 5 ●4” Repair Couplings – 2 ●Special Tools Set – 1 C.GENERAL: ●SS pipe work is cleaned, degreased and acid washed for following the fabrication. ●AIS is exempt for the above Aeration equipment. ●Piping sections are supplied in 20' lengths maximum and connected at site with suitable	NO TAG	510464-DS-103	B27
10	3	3090315	VALVE-BTFLY,SS,8.00,MAN,LG,150,EPDM,BR	BUTTERFLY VALVE MANUFACTURER: BRAY SERIES: 31-375 VALVE SIZE: 8 IN. MATERIAL: BODY- DUCTILE IRON DISC- 316SS STEM- 416SS SEAT- EPDM CONTROL: MANUAL LEVER CONNECTION: LUG PRESSURE RATING: 150 PSI	16-HV-405-1/2/3	510464-DS-103	B03

510464- CAESAR LANES- EQUIPMENT BILL OF MATERIAL- REV C

S. No	Qty	SAP Part No. OR CFO	Primary Description	Complete Description	Tags	Drawing No.	Cutsheet Binder Tab #
11	3	3090314	VALVE-BTFLY,SS,6.00,MAN,LG,150,EPDM,BR	BUTTERFLY VALVE MANUFACTURER: BRAY SERIES: 31-375 VALVE SIZE: 6 IN. MATERIAL: BODY- DUCTILE IRON DISC- 316SS STEM- 416SS SEAT- EPDM CONTROL: MANUAL LEVER CONNECTION: LUG PRESSURE RATING: 150 PSI BRAY ASSEMBLY ID 9C060LF169L BRAY 310600-13010375 / 010500-21100007	16-HV-406-1/2/3	510464-DS-103	B03
10	6	3195051	CONTROLLER,DUAL,4-20MA,HACH,SC4500,120V	CONTROLLER, UNIVERSAL, HACH MODEL SC4500 LXV525.99A11551 - DUAL DIGITAL SENSOR INPUTS (SC CONECTORS) - 5) 4-20 mA OUTPUTS - 2) SPDT RELAY OUTPUTS - NEMA 4X/IP66 ENCLOSURE - 100-240 VAC 50/60HZ - MOUNTING HARDWARE FOR CONTROLLER INCLUDED CE. ETL certified to UL and CSA safety standards (with all sensor types), FCC, ISED, KC, RCM, EAC, UKCA, SABS, C (Morocco)	16-AIT-405-1 16-AIT-405-2 16-AIT-405-3 16-AIT-403-1 16-AIT-403-2 16-AIT-403-3	510464-DS-103	C16
11	6	3184179	SENSOR-DO,CPVC,2.00,SOC,20PPM,LDO2,HACH	"Hach LDO® Model 2 , DO Probe with Luminescent Dissolved Oxygen Technology Accuracy: ± 0.05 ppm Below 5 ppm Accuracy 2: ± 0.1 ppm Above 5 ppm Accuracy 3: Temperature: ± 0.2 Accuracy 4: 0.2 °C Body material: Stainless Cable Length: 10 m (33 ft) Calibration Method: All Probes are factory calibrated and ready to use Air Calibration: one point, 100% water saturated air Sample Calibration: comparison to standard instrument, or comparison to Winkler Titration method Communication: Modbus Diameter: 48.25 mm Dimensions (D x L): 48.25 mm x 254 mm Flow: no flow required Flow Rate: None required Hazardous Location Ratings: ETL listed (cETLus marked) to Canadian and US General Safety and Hazardous (Class I, Div. 2) Locations Interferences: No Interferences from the following: H2S, pH, K+, Na+, Mg2+, Ca2+, NH4+, Al3+, Pb2+, Cd2+, Zn2+, Cr (total), Fe2+, Fe3+, Mn2+, Cu2+, Ni2+, Co2+, CN-, NO3-, SO42-, S2-, PO43-, Cl-, anion active	16-AE-405-1 16-AE-405-2 16-AE-405-3 16-AE-403-1 16-AE-403-2 16-AE-403-3	510464-DS-103	C16

510464- CAESAR LANES- EQUIPMENT BILL OF MATERIAL- REV C

S. No	Qty	SAP Part No. OR CFO	Primary Description	Complete Description	Tags	Drawing No.	Cutsheet Binder Tab #
12	3	3184186	SENSOR-PH,GLASS,1.00,MNPT,14,DPD1P1,HACH	pHD sc: Digital pH sensor with glass differential electrode, sc compatibility, PEEK®, Convertible Mount Accuracy: ± 0.02 pH Body material: PEEK® Cable Connection: Digital Cable Length: 10m (33 ft.) Calibration Method: Two point automatic, one point automatic, two point manual, one point manual Communication: Modbus Drift: 0.03 pH per 24 hours, non-cumulative Electrode Type: General Purpose Flow Rate: 3 m (10 ft.) per second, maximum Length: 271.3 mm Mounting: Convertible Operating Temperature Range: Analog Sensor with Digital Gateway: -5 - 105 °C Digital Sensor: 0 - 50 °C pH Range: 0 - 14 pH Pressure Range: Maximum 10.7 bar . 6.9 bar for Digital Sensor at 70°C, and 6.9 bar for Analog Sensor at 105°C. Range: -2.0 - 14.0 pH Region: Global Repeatability: ± 0.05 pH Sensitivity: ± 0.01 pH Sensor Cable: 4 10 m (33 ft.) polyurethane, 4-conductor cable with one shield, rated to 105°C (221°F) Sensor Thread: 1" NPT Storage Conditions: 4 - 70°C, 0 - 95% relative humidity (non-condensing) Temperature Accuracy: ±0.5 °C Temperature Compensation: Automatic with NTC 300 Ω thermistor, or manually fixed at a user-entered temperature, additional selectable temperature correction factors (ammonia, morpholine, or user-defined	16-AE-402-1, 16-AE-402-2, 16-AE-402-3	510464-DS-103	C16
13	9	3109286	BRACKET-PROBE,FLOAT,1.00,NPT,SENSOR	KTO: FLOAT MOUNT, HACH, ITEM# 9253100, 1" NPT SENSOR	Mounting kit for: 16-AE-405-1/2/3 16-AE-403-1/2/3 16-AE-402-1/2/3	510464-DS-103	C16

510464- CAESAR LANES- EQUIPMENT BILL OF MATERIAL- REV C

S. No	Qty	SAP Part No. OR CFO	Primary Description	Complete Description	Tags	Drawing No.	Cutsheet Binder Tab #
14	3	3087034	SWITCH-FLOAT,PP,120/220VAC,4"FLT	SWITCH, LEVEL, MJK PT# 202810, MODEL 7030, CABLE SUSPENDED 4" Ø FLOAT, POLYPROPYLENE HOUSING, 39 FT LONG OIL RESISTANT PVC CABLE, 120VAC OR 220VAC, 1PH/60Hz, -20oC to 60oC OPERATING TEMPERATURE	16-LSHH-401-1/2/3	510464-DS-103	C08
P&ID MEMBRANE TANK						**510464-DS-104**	
15	4	3178110	ASSY-EJECTOR,316,24VDC,SS TUBE	ASSEMBLY EJECTOR (AIR ASSEMBLY AND WATER ASSEMBLY)	20-HV-802-1/2/3/4 20-PCV-801-1/2/3/4 20-FV-802-1/2/3/4 20-FV-801-1/2/3/4 20-E-801-1/2/3/4 20-HV-801-1/2/3/4 20-HV-803-1/2/3/4	510464-DS-104	A06
16	20	3193012	M/C-ZW500EV,64/64,316L,LEAP,8IN	ZW500EV CASSETTE, POPULATED WITH 64/64 MODULES, EACH MODULE HAS 530 FT2 OF SURFACE AREA	A-1/2/3/4 B-1/2/3/4 C-1/2/3/4 D-1/2/3/4 E-1/2/3/4	510464-DS-104	A01
17	4	3197282	M/C-ZW500EV,32/64,316L,LEAP,8IN	ZW500EV CASSETTE, POPULATED WITH 32/64 MODULES, EACH MODULE HAS 530 FT2 OF SURFACE AREA	F-1/2/3/4	510464-DS-104	A01
18	5	3136677	TRANS-LEVEL,316,3.00,FLG,156",E+H	"ENDRESS+HAUSER Transmitter, Level. Deltapilot M FMB51 FMB51-CD21JD1FGK85AGJB3U [CD] Approval: CSA C/US General Purpose [2] Output: 4-20mA HART [1] Display, Operation: LCD, push button on display/electronics [J] Housing: F31 Alu, Glass window [D] Electrical Connection: Thread NPT1/2, IP66/68 NEMA4X/6P [1F] Sensor Range: 400mbar/40kPa/6psi gauge,4mH2O/13ftH2O/160inH2Ooverload: 8bar/800kPa/120psi [G] Reference Accuracy: Standard [K] Calibration; Unit: Customised level; see additional spec.. > Additional text: 0...0156 "" H2O [85] Probe Connection: 156 in rod, 316L [AGJ] Process Connection: 3"" 150lbs RF, 316/316Lflange ANSI B16.5 [B] Membrane Material: Alloy C [3] Fill Fluid: Synthetic oil, FDA [U] Seal: None, cell welded "	20-LIT-200 20-LIT-203-1/2/3/4 RANGE: 0 - 156 INCHES	510464-DS-104	C09
19	4	3083238	TRANS-PRESS,316,0.50,NPT,-15-15,4-20,E+H	ENDRESS+HAUSER, Cerabar S PMC71 P/N: PMC71-UAC1KBRAAAA PRESSURE, CAPACITIVE COMPACT. LOW RANGE VALUE -15.000 psi UPEER RANGE VALUE 15.000 psi DISPLAY AT 4mA DISPLAY AT 20mA [U] APPROVAL: CSA C/US IS Cl.I,II,III Div.1 Gr.A-G, Cl.I Div.2 Gr.A-D, Ex ia, C: zone 0,1,2/ US: zone 0,1,2,20,21,22 [A] OUTPUT; OPERATING: 4-20mA HART; extern + LCD [C] HOUSING; COVER SEALING; CABLE ENTRY: T14 Alu IP66/67 NEMA6P; EPDM; NPT1/2 thread, T14 = side cover [1K] SENSOR RANGE; SENSOR OVERLOAD LIMIT: 2bar/200kPa/30psi gauge; 18bar/1800kPa/270psi [B] CALIBRATION; UNIT: **Customised; see additional spec. [RA] PROCESS CONNECTION: Thread ANSI MNPT1/2 FNPT1/4, 316L [A] SEAL: FKM [A] ADDITIONAL OPTION 1: NOT SELECTED [A] ADDITIONAL OPTION 2: NOT SELECTED	20-PIT-301-1/2/3/4 RANGE : -15 to +15 PSIG	510464-DS-104	C07

510464- CAESAR LANES- EQUIPMENT BILL OF MATERIAL- REV C

S. No	Qty	SAP Part No. OR CFO	Primary Description	Complete Description	Tags	Drawing No.	Cutsheet Binder Tab #
20	8	3087034	SWITCH-FLOAT,PP,120/220VAC,4"FLT	SWITCH, LEVEL, MJK PT# 202810, MODEL 7030, CABLE SUSPENDED 4" Ø FLOAT, POLYPROPYLENE HOUSING, 39 FT LONG OIL RESISTANT PVC CABLE, 120VAC OR 220VAC, 1PH/60Hz, -20oC to 60oC OPERATING TEMPERATURE	20-LSHH-201-1/2/3/4 20-LSLL-201-1/2/3/4	510464-DS-104	C08
	4	3090812	VALVE-KNIFEGATE,316,20.0,A/A SV,LG,24,UD	VALVE, KNIFE GATE, ORBINOX, SERIES 20 MODEL# 20-3636R, 20", LUGUNI-DIRECTIONAL, 316SS BODY, 316SS GATE, PTFE IMPREGNATED SYNTHETIC FIBER PACKING, EPDM SEAT, 316SS RETAINER RING,C/W RDC PNEUMATIC DOUBLE ACTING CYCLINDER FROM ABOVE ITEM, 12" BORE,C/W NUMATICS 153SA43CM SOLENOID VALVE, NEMA 4, 24VDCC, 1/2" NPT DIN CONNECTION.	20-FV-502-1/2/3/4	510464-DS-104	B18
P&ID PERMEATE SIPHON & ASSOCIATED EQUIPMENT						**510464-DS-105**	
21	8	3067260	VALVE-BALL,316,0.50,1PC THD	VALVE, BALL, PINACLE, 1/2", 1-PC REDUCED PORT, P/N 13TBV105, NPT, 316SS BODY & TRIM, PTFE SEAT & SEAL, CV = 5.5, 800# WOG, WITH LEVER LOCKING HANDLE	20-HV-302-1/2/3/4 20-HV-301-1/2/3/4	510464-DS-105	B01
22	4	3067264	VALVE,BALL,2",316SS,1PC,THD	VALVE, BALL, PINACLE, 2", 1-PC REDUCED PORT, P/N 13TBV12, NPT,316SS BODY & TRIM, PTFE SEAT & SEAL, CV = 60, 1000# WOG, WITHLEVER LOCKING HANDLE.	20-HV-305-1/2/3/4	510464-DS-105	B01
23	4	CFO	DEZURIC, 16", V-PORT MODULATING BALL VALVE	Style: V-Port Ball Valve Size: 16 Inch (400mm) End Connection: Class 150; Flanged Drilling; ISA 75.08.02 and IEC 534-3-2F-F Body Material: Carbon Steel Packing: PTFE Chevron; Temperature to 500 Degree F. (260 Degree C.) Ball Material: 317 SST; Heat Treated; Electroless Nickel Overlay to 700 Degree F. Shaft: 2205 Duplex Stainless Steel Seat Type: Rigid 317 Stainless Steel; Heat Treated; Electroless Nickel Overlay; Temperature to 450 Degree F. Bushing: 317 SST Wire Mesh Encapsulated in PTFE Liner to 500 Degree F. Coating or Paint: 4 mils minimum (non-stainless steel parts) of Blue DeZURIK Epoxy (NSF Std. 61) on Exterior with Standard (SP10) surface prep Actuator Type: PowerRac Cylinder; 8 In Dia	20-FCV-301-1/2/3/4	510464-DS-105	B05
24	4	3090321	VALVE-BTFLY,316,16.0,GEAR,LG,BR	BUTTERFLY VALVE MANUFACTURER: BRAY SERIES: 31-375 VALVE SIZE: 16 IN. MATERIAL: BODY: DUCTILE IRON DISC: 316SS STEM: 416SS SEAT: EPDM CONTROL: MANUAL-GEAR CONNECTION: LUG PRESSURE RATING: 150 PSI ADDITIONAL MANUF. INFORMATION: P/N: 311600-11010375 - S31 16" DI,316,416,EPDM BONDED P/N: 040500-21202002 - GEAR	20-HV-303-1/2/3/4	510464-DS-105	B03
25	4	3090313	VALVE-BTFLY,SS,4.00,MAN,LG,150,EPDM,BR	BUTTERFLY VALVE MANUFACTURER: BRAY SERIES: 31-375 VALVE SIZE: 4 IN. MATERIAL: BODY- DUCTILE IRON DISC- 316SS STEM- 416SS SEAT- EPDM CONTROL: MANUAL LEVER CONNECTION: LUG PRESSURE RATING: 150 PSI	20-HV-304-1/2/3/4	510464-DS-105	B03

510464- CAESAR LANES- EQUIPMENT BILL OF MATERIAL- REV C

S. No	Qty	SAP Part No. OR CFO	Primary Description	Complete Description	Tags	Drawing No.	Cutsheet Binder Tab #
26	8	3196508	VALVE-BTFLY,316,16.0,A/A 24V,LG,BR	BUTTERFLY VALVE MANUFACTURER: BRAY SERIES: 31-375 VALVE SIZE: 16 IN. MATERIAL: BODY: DUCTILE IRON DISC: 316SS STEM: 416SS SEAT: EPDM CONTROL: DOUBLE ACTING W/ 24VDC SOLENOID CONNECTION: LUG PRESSURE RATING: 150 PSI ADDITIONAL MANUF. INFORMATION: P/N: 311600-13010375 - S31 16" DI,316,416,EPDM BONDED P/N: 922100-11300532 - S92/210 PNEU ACT-50mm DD P/N: 630250-21401536 - S63 SOL VLV,N4,24VDC P/N: 630250-22504536 - S63 MTG CHARGE N4,7,9 4-WAY P/N: 550250-23010536 - SPEED CONTROL,SINGLEWAY,1/4NPT	20-FV-621-1/2/3/4 20-FV-622-1/2/3/4	510464-DS-105	B04
27	4	CFO	TRANS-FLOW,MAG,16.0FLG,0-4500GPM,PROMAG 400,E+H	Electromagnetic Flow meter Promag E 400, 5W4C3F, DN400 16” Manufacturer: E+H Tags: 20-FIT-301-1, 20-FIT-301-2, 20-FIT-301-3, 20-FIT-301-4 Model: 5W4C3F-C6ILHA0DUA1K0A+DAZ1 C6 Approval: CSA C/US NI Cl.I Div.2 Gr. ABCD I Design: Fixed flange, 0 x DN inlet/ outlet runs L Power Supply: 100-240VAC/24VAC/DC H Output; Input: 4-20mA HART, pulse/freq., switch output A Housing: Compact, alu, coated 0 Cable, Not used D Electrical Connection: Thread NPT1/2 U Liner: Polyurethane A1K Process Connection: Cl.150, carbon steel, flange ASME B16.5 0 Electrodes: 1.4435/316L A Calibration Flow: 0.5% DA >>Customized Parameterization: Output 1 Z1 >>Marking: Tagging (TAG), see additional spec. Details Curr. output 1 Volume flow Current span 4...20 mA NAMUR Value 0/4 mA: 0 USgal/min Value 20 mA: 4500 USgal/min Failsafe mode current output: Max. Damping output 1: 1 s Device 1 1x TAG-stainless steel label (50105107)	20-FIT-301-1/2/3/4 RANGE: 0-4500 GPM	510464-DS-105	C10
28	8	3083677	GAUGE-PRESS,SS,4.5,BTM,15PSI,AS	PRESSURE GAUGE (COMPOUND), ASHCROFT PT# 45-1279SSL-4L 30"Hg/15PSI, SS BURDON TUBE AND SOCKET, 4.5"" DIAL, 30" MERCURY/15 PSI 1/2" LOWER CONNECTIONS, GLYCERINE FILLED, +/-0.5% ASME GR 2A ACCURACY, SOLID FRONT BLACK PHENOLIC CASE.	20-PI-302-1/2/3/4 20-PI-301-1/2/3/4 RANGE: 30" Mercury - 15 psi	510464-DS-105	C04
29	4	3089342	VALVE-BALL,FV,1",PVC/FPM,SRFC,24V	VALVE, BALL, 1", TRUE UNION, PVC BODY, TEFLON SEATS, FPM O-RINGS, SOCKETWELD, GEORGE FISCHER TYPE 546, C/W PA11 SPRING RETURN FAIL CLOSE PNEUMATIC RACK AND PINION ACTUATOR PT# 199 233 075, ASSEMBLY PT# S199 233 075 C/W CSA/UL APPROVED SOLENOID PILOT VALVE 24 V/DC TYPE PV95 PT#199190554CSA	20-FV-803-1/2/3/4	510464-DS-105	B02
30	4	3088951	VLVE,BALL,0.375",316SS,2PC,THD	VALVE, BALL, PINACLE, 3/8", 2-PC FULL PORT, P/N 13TBV20375,NPT, 316SS BODY & TRIM, PTFE SEAT & SEAL, CV = 16, 1000#WOG, WITH LEVER LOCKING HANDLE.	20-HV-321-1/2/3/4	510464-DS-105	B01

510464- CAESAR LANES- EQUIPMENT BILL OF MATERIAL- REV C

S. No	Qty	SAP Part No. OR CFO	Primary Description	Complete Description	Tags	Drawing No.	Cutsheet Binder Tab #
31	4	CFO	SAMPLE FEED PUMP FOR TURBIDITY METER ASSEMBLY	PUMP, METERING, PROMINENT PT# S1CaH 07065 PVT 0070UD1110C, PVDF LIQUID END W/PTFE SEALS, 115/230 VAC, 50/60 Hz, N. AMERICAN PLUG, analog control option, UL and CSA approved, fault annunciating relay-drops out	20-P-321-1/2/3/4	510464-DS-105	A09
32	4	3196454	VALVE-BALL,PP,0.25X.38,MAN,MPTXTB,PARKER	POLYPROPYLENE BALL VALVES MFG: PARKER PART NUMBER: PP6VMC4-MG SHAPE: CONNECTOR STYLE: TUBE TO PIPE CONNECTION TYPE: COLLET CONNECTION 1 TUBE O.D. (INCH): 3/8 CONNECTION 1 STYLE: PUSH-TO-CONNECT CONNECTION 2 THREAD SIZE (INCH): 1/4 CONNECTION 2 STYLE: MALE PIPE PERFORMANCE CHARACTERISTICS MINIMUM OPERATING TEMPERATURE: 35 °F (2 °C) MAXIMUM OPERATING TEMPERATURE: 200 °F (93 °C) MAXIMUM OPERATING PRESSURE: 150 psi (10 bar) CONNECTION TYPE: NPTF SPECIFICATIONS MET: FDA, NSF-51, NSF-61 BODY MATERIAL: POLYPROPYLENE BALL MATERIAL: POLYSULFONE SEAT MATERIAL: EPDM	20-HV-320-1/2/3/4	510464-DS-105	B01
33	4	3178030	ASSY-TURBID,W/COLM,24V,SGL,HACH,TU5300	TURBIDITY PANEL ASSEMBLY C/W CLEANING MODULE ANF DEGASSING COLUMN	20-FV-324-1/2/3/4 20-HCV-324-1/2/3/4 20-TK-324-1/2/3/4 20-HV-324-1/2/3/4 20-FV-320-1/2/3/4 20-HCV-320-1/2/3/4 20-AE/AIT-320-1/2/3/4 20-FE-320-1/2/3/4	510464-DS-105	C15
34	4	3195051	CONTROLLER,DUAL,4-20MA,HACH,SC4500,120V	CONTROLLER, UNIVERSAL, HACH MODEL SC4500 LXV525.99A11551 - DUAL DIGITAL SENSOR INPUTS (SC CONECTORS) - 5) 4-20 mA OUTPUTS - 2) SPDT RELAY OUTPUTS - NEMA 4X/IP66 ENCLOSURE - 120 VAC 50/60HZ - MOUNTING HARDWARE FOR CONTROLLER INCLUDED	20-AIT-320-1/2/3/4	510464-DS-105	C15

510464- CAESAR LANES- EQUIPMENT BILL OF MATERIAL- REV C

S. No	Qty	SAP Part No. OR CFO	Primary Description	Complete Description	Tags	Drawing No.	Cutsheet Binder Tab #
35	4	3196221	ANALYZER-TURB,HACH,TU5300,W/CLEANER	MANUFACTURER: HACH P/N: LXV445.99.53112 MODEL: TU5300SC LOW RANGE LASER TURBIIDIMETER WITH FLOW SENSOR, AUTOMATIC CLEANING, RFID, AND SYSTEM CHECK, EPA VERSION MODEL: TU5300SC SPECIFICATIONS ACCURACY: ±2% OR 0.01 NTU FROM 0 - 40 NTU ±10% OF READING FROM 40 - 1000 NTU BASED ON FORMAZIN PRIMARY STD CABLE LENGTH:1.6 M (5.25 FT) CALIBRATION METHOD: FOR FORMAZIN AND STABLCAL®: 20 NTU FROM 0 TO 40 NTU; AT 20 FNU AND 600 NTU FOR FULL RANGE CUSTOM CALIBRATION FOR UP TO 6-POINT CALIBRATIONS CERTIFICATIONS: CE COMPLIANT US FDA ACCESSION NUMBER: 1420493-000 EPA VERSION, 1420492-000 ISO VERSION AUSTRALIAN ACMA MARKING COMMUNICATION: SYSTEM CHECK & RFID CONTROLLER: SENSOR ONLY DIMENSIONS (H X W X D):249 MM X 268 MM X 190 MM ENCLOSURE RATING: ELECTRONIC COMPARTMENT IP55; ALL OTHER FUNCTIONAL UNITS IP65 WITH PROCESS HEAD/ACM ATTACHED TO THE TU5300SC/TU5400SC INSTRUMENT FITTING TYPE: SAMPLE QUICK CONNECTOR: ¼-IN. FOR ¼-IN. TUBING INSTRUMENT: WITH FLOW SENSOR AND AUTOMATIC CLEANING MODULE LIGHT SOURCE: CLASS 2 LASER PRODUCT, WITH EMBEDDED 650 NM (EPA 0.43 MW) OR CLASS 1 LASER PRODUCT, WITH EMBEDDED 850 NM (ISO), MAX. 0.55 MW (COMPLIES WITH IEC/EN 60825-1 AND TO 21 CFR 1040.10 IN ACCORDANCE WITH LASER NOTICE NO. 50)	20-AE-320-1/2/3/4	510464-DS-105	C15
36				LOWER LIMIT OF DETECTION (LOD): 0.002 NTU MATERIAL: ASA S 777K / RAL7000, TPE RESIN ELASTOCON® STK40, THERMOPLASTIC ELASTOMER TPS-SEBS MODEL: TU5300SC MOUNTING CONFIGURATIONS: WALL MOUNT OPERATING HUMIDITY: RELATIVE HUMIDITY: 5 - 95% AT DIFFERENT TEMPERATURES, NON-CONDENSING OPERATING TEMPERATURE RANGE: 0 - 50 °C OPTIONS: PROCESS HEAD WITH FLOW SENSOR AND AUTOMATIC CLEANING MODULE POWER REQUIREMENTS (VOLTAGE): NONE RANGE: EPA: 0 - 700 NTU / FNU / TE/F / FTU 0 - 175 EBC REGULATORY: EPA REPEATABILITY: BETTER THAN 1% OF READING OR ±0.002 NTU ON FORMAZIN AT 25 °C (77 °F), WHICHEVER IS GREATER RESOLUTION: 0.0001 NTU / FNU / TE/F / FTU / EBC RESPONSE TIME: T90 <45 SECONDS AT 100 ML/MIN SAMPLE FLOW RATE: 100 - 1000 ML/MIN; OPTIMAL FLOW RATE: 200 - 500 ML/MIN SAMPLE PRESSURE: 6 BAR (87 PSI) MAXIMUM, COMPARED TO AIR AT SAMPLE TEMPERATURE RANGE FROM 2 - 40 °C (35.6 - 104 °F) SAMPLE TEMPERATURE: 2 - 60 °C (35 - 140 °F) SIGNAL AVERAGE TIME: 30 - 90 SECONDS STORAGE CONDITIONS: -40 - 60 °C (-40 - 140 °F) STRAY LIGHT: <10 MNTU SYSTEM CHECK: YES UNITS: NTU, FNU, TE/F, FTU, EBC VERIFICATION: LIQUID: STABLCAL®, FORMAZIN (0.1 - 40 NTU) DRY: GLASS ROD AT <0.1 NTU WARRANTY: 12 MONTHS WEIGHT: 5.95 LBS. (2.7 KG); 11 LBS. (5.0 KG) WITH ALL ACCESSORIES INCLUDED: TU5300SC TURBIDIMETER, AUTOMATIC CLEANING UNIT, USER MANUAL, WALL MOUNT, VIAL REPLACEMENT TOOL, SCREW SET, DRYING CARTRIDGE, FLOW REGULATOR, SERVICE BRACKET, FLOW SENSOR			
P&ID BACKPULSE TANK/PUMP						**510464-DS-106**	

510464- CAESAR LANES- EQUIPMENT BILL OF MATERIAL- REV C

S. No	Qty	SAP Part No. OR CFO	Primary Description	Complete Description	Tags	Drawing No.	Cutsheet Binder Tab #
37	2	CFO	SULZER SUBMERSIBLE BACKPULSE PUMP	Backpulse Pump - Maximum Duty Point 3703 GPM @ 44ft TDH (22ft Static) Sulzer Submersible Pump (Wet Pit),Model #XFP255J-CB2-PE430/6,43kW-1190RPM,460/60/3, complete with contrabock impeller,double mechanical seals,bi-metal switches plus Di seal probe,15m CSA Cable and DN250 Discharge. Accessories Included: *Guide Rail Assy /w Elbow and Upper Brkt DN250 (2"Dia Guide Pipe by Others) *Hardware Kit,SS *Lifting Chain 30ft Galv *Relay CA462 Heat/Seal 115V	20-P-610-A/B	510464-DS-106	A04
38	2	3083502	CV,WFR,16"CENTERLINE,DI/SS	VALVE, CHECK, WAFER, CENTERLINE PT# 16R1644D5X, DUCTILE IRON BODY, EPDMRESILIENT SEAT, 316SS PLATE, SHAFT AND SPRINGS, 16", 150# RATING.	20-CV-602-1/2	510464-DS-106	B10
39	2	3090321	VALVE-BTFLY,HV,16",LUG,SS,GEAR	VALVE, BUTTERFLY, BRAY SERIES 31-169, 16" CAST IRON LUG STYLE BODY, RATED VACUUM TO 150 PSI, SS DISC AND SHAFT, EPDM SEAT, GEAR OPERATOR; BRAY ASSEMBLY ID 9C160LF169G.	20-HV-610-1/2	510464-DS-106	B03
40	1	3089342	VALVE-BALL,PVC,1.00,A/S SV,SOC,FPM,24V	VALVE, BALL, 1", TRUE UNION, PVC BODY, TEFLON SEATS, FPM O-RINGS, SOCKETWELD, GEORGE FISCHER TYPE 546, C/W PA11 SPRING RETURN FAIL CLOSE PNEUMATIC RACK AND PINION ACTUATOR PT# 199 233 075, ASSEMBLY PT# S199 233 075 C/W CSA/UL APPROVED SOLENOID PILOT VALVE 24 V/DC TYPE PV95 PT#199190554CSA	23-FV-130	510464-DS-106	B02
41	1	3089339	VALVE-BALL,FV,0.5",PVC/EPDM,SRFC,24V	VALVE, BALL, 0.5", TRUE UNION, PVC BODY, TEFLON SEATS, EPDM O-RINGS, SOCKETWELD, GEORGE FISCHER TYPE 546, C/W PA11 SPRING RETURN FAIL CLOSE PNEUMATIC RACK AND PINION ACTUATOR PT# 199 233 063, ASSEMBLY PT# S199 233 063 C/W TYPE PV95 24 V/DC SOLENOID VALVE PT# 199 190 554CSA WITH MANUAL OVERRIDE, CSA/UL APPROVED.	23-FV-330	510464-DS-106	B02
42	1	3090241	VALVE-CHK,PVC,1.00,CONE,SOC,GF,VTN	VALVE, CONE CHECK, 1" TRUE UNION, GEORGE FISCHER, PT# 161 561 114,PVC BODY, FPM SEAL, SOCKET END CONNECTIONS. CV:32 MF: 18 L/m	23-CV-130	510464-DS-106	B15
43	1	1258023	VALVE-CHK,PVC,0.50,CONE,TU,EPDM,GF	CONE CHECK VALVE MANUFACTURER: GEORG FISCHER PART NUMBER: 161 561 102 SIZE: 0.50" TYPE: 561 BODY MATERIAL: PVC SEAL MATERIAL: EPDM PRESSURE RATING: 150 psig END CONNECTIONS: TRUE UNION (SOCKET/NPT) CV:13 MF:9 L/m	23-CV-330	510464-DS-106	B15
44	1	3087944	VALVE-BALL,PVC,1.00,GF,COMBO,VENTED	VALVE, BALL, TRUE UNION, GEORGE FISCHER TYPE 546 VENTED BALL VALVE, OLD PT# V161546354, NEW PT#151546354, 1", PVC BODY, TEFLON SEATS, VITON O-RINGS, SOCKET/THREADED COMBO END CONNECTIONS.	23-HV-130	510464-DS-106	B01
45	1	3087942	VALVE-BALL,PVC,0.50,COMBO,VENTED,GF	VALVE, BALL, TRUE UNION, GEORGE FISCHER TYPE 546 VENTED BALL VALVE, PT# V161546352, 0.5", PVC BODY, TEFLON SEATS, VITON O-RINGS, SOCKET/THREADED COMBO END CONNECTIONS.	23-HV-330	510464-DS-106	B01

510464- CAESAR LANES- EQUIPMENT BILL OF MATERIAL- REV C

S. No	Qty	SAP Part No. OR CFO	Primary Description	Complete Description	Tags	Drawing No.	Cutsheet Binder Tab #
46	1	3067260	VALVE-BALL,0.5",316SS,1PC,THD	VALVE, BALL, PINACLE, 1/2", 1-PC REDUCED PORT, P/N 13TBV105, NPT, 316SS BODY & TRIM, PTFE SEAT & SEAL, CV = 5.5, 800# WOG, WITH LEVER LOCKING HANDLE	20-HV-602	510464-DS-106	B01
#REF!	1	CFO	TEMPERATURE TRANSMITTER	Temperature sensor/Transmitter RTD assembly TH13, TW type US style Manufacturer: E+H Tags: 20-TIT-301 Model: TH13-6A23X2EBA1EC 6 Thermowell Immersion length U: 16.50 Inch 16.5 inch A2 Process Connection; Material: NPT3/4 male thread; 316 3 Thermowell Shape: Tapered X Thermowell Lag T: 1.00 Inch 2 Extension: Nipple+union+nipple 316 E=4" E Sensor Type: 1xPt100 class B, 4-wire, -50-200oC B Enclosure; Cable Entry: Alu, E+H blue; NPT1/2 A Electrical Connection: **Programmable RTD TMT180 1 Additional Option 1: Not selected 2 Additional Option:E Calibration certificate 1x RTD + EN10204-3.1 material certificate incl. MTR + NACE MR0175 and MR0103, 0oC + 2 points variable, as specified C Version: Acc. to ASME PTC 19.3 TW2016,certificate for passed thermowell calculation Details: Low range value: 32 °F Upper range value: 90 °F Failure mode(1=low<3.6mA,2=high>21mA): 2 Calibration point 2: 45 °F Calibration point 3: 90 °F Medium: LIQUID Fluid type: Liquid (water) Max. temperature: 150 °F Max. pressure: 20 psi g Density: 1 lb/USgal Viscosity: 0.01 cP Flow Velocity: 1.7 ft/s Unstreamed length (nozzle length): 2 Inch Act.Insert.Length, ONLY weld/socket weld: 0 Inch Dummy field, not used, no input required: null	20-TIT-301 RANGE: 0 - 50 DEG C	510464-DS-106	C03
#REF!	1	3136674	TRANS-LEVEL,316,3.00,FLG,118",E+H	"ENDRESS+HAUSER Transmitter, Level. Deltapilot M FMB51-CD21JD1FGK85AGJB3U [CD] Approval: CSA C/US General Purpose [2] Output: 4-20mA HART [1] Display, Operation: LCD, push button on display/electronics [J] Housing: F31 Alu, Glass window [D] Electrical Connection: Thread NPT1/2, IP66/68 NEMA4X/6P [1F] Sensor Range: 400mbar/40kPa/6psi gauge,4mH2O/13ftH2O/160inH2Ooverload: 8bar/800kPa/120psi [G] Reference Accuracy: Standard [K] Calibration; Unit: Customised level; see additional spec.. > Additional text: 0...118"" H2O [85] Probe Connection: 118 in rod, 316L [AGJ] Process Connection: 3"" 150lbs RF, 316/316Lflange ANSI B16.5 [B] Membrane Material: AlloyC [3] Fill Fluid: Synthetic oil, FDA [U] Seal: None, cell welded"	20-LIT-601 118" rod length to be finalized	510464-DS-106	C09
#REF!	1	3023463	GAUGE-PRESS,316,4.5,BCK,0.50M,30PSI,AS	PRESSURE INDICATOR ASHCROFT 45-1279SS-04B-0/30PSI DIAL SIZE: 4.5" CASE MATERIAL: PHENOLIC WINDOW MATERIAL: GLASS PROCESS CONNECTION: 1/2" NPTM, BACK WETTED PARTS MATERIAL: 316SS RANGE: 0-30 PSIG	20-PI-602	510464-DS-106	C04

510464- CAESAR LANES- EQUIPMENT BILL OF MATERIAL- REV C

S. No	Qty	SAP Part No. OR CFO	Primary Description	Complete Description	Tags	Drawing No.	Cutsheet Binder Tab #
#REF!	1	CFO	TRANS-FLOW,MAG,14.0FLG,0-4500GPM,PROMAG 400,E+H	Electromagnetic Flow meter Promag E 400, 5W4C3F, DN350 14” Manufacturer: E+H Tags: 20-FIT-602 Model: 5W4C3F-C6ILHA0DUA1K0A+DAZ1 C6 Approval: CSA C/US NI Cl.I Div.2 Gr. ABCD I Design: Fixed flange, 0 x DN inlet/ outlet runs L Power Supply: 100-240VAC/24VAC/DC H Output; Input: 4-20mA HART, pulse/freq., switch output A Housing: Compact, alu, coated 0 Cable, Not used D Electrical Connection: Thread NPT1/2 U Liner: Polyurethane A1K Process Connection: Cl.150, carbon steel, flange ASME B16.5 0 Electrodes: 1.4435/316L A Calibration Flow: 0.5% DA >>Customized Parameterization: Output 1 Z1 >>Marking: Tagging (TAG), see additional spec. Details Curr. output 1 Volume flow Current span 4...20 mA NAMUR Value 0/4 mA: 0 USgal/min Value 20 mA: 4500 USgal/min Failsafe mode current output: Max. Damping output 1: 1 s Device 1 1x TAG-stainless steel label (50105107)	20-FIT-602 RANGE: 0-4500 GPM	510464-DS-106	C10
#REF!		3104114	SWITCH-PRESS,UE,0-50PSI,J6-354	PRESSURE SWITCH, 0-50 PSI ADJUSTABLE RANGE, 1/4" NPT, 100107 UNITED ELECTRIC CONTROLS, J6-354	20-PSH-601 20-PSH-602 SET POINT: 30 PSIG	510464-DS-106	C11
#REF!	1	CFO	16" BASKET STRAINER	IFC Model: 16-B125FIB1 Strainer type: Cast Iron Basket Strainer Inlet/Outlet Connection: 16”, 125#. FF Flanges per ASME B16.1 Body, Cover & Manifold Material: A126-B CAST IRON Basket filtration: 1 mm perforated screen. Option for 2mm at no extra cost. Basket Material: 304 Stainless Steel Cover Type: Bolted Flange Cover Gasket: Graphite DP Connections: ¾” NPT Instrumentation: Differential Pressure Switch with 2.5” dial, isolation valves and line filters. Drain Connection: 2” NPT c/w Plug Design Pressure: 150 PSI @ 150°F	20-SCN-600 C/W 20-DPS-600	510464-DS-106	B13
	1	3067264	VALVE,BALL,2",316SS,1PC,THD	VALVE, BALL, PINACLE, 2", 1-PC REDUCED PORT, P/N 13TBV12, NPT,316SS BODY & TRIM, PTFE SEAT & SEAL, CV = 60, 1000# WOG, WITHLEVER LOCKING HANDLE.	20-HV-600	510464-DS-106	B01
P&ID EJECTOR FOR PERMEATE UPSTREAM LINES						**510464-DS-109 SHEET 1**	
55	1	3178110	ASSY-EJECTOR,316,24VDC,SS TUBE	ASSEMBLY EJECTOR (AIR ASSEMBLT AND WATER ASSEMBLY)	20-HV-802-5 20-PCV-801-5 20-FV-802-5 20-FV-801-5 20-E-801-5 20-HV-801-5 20-HV-803-5	510464-DS-109 SHEET 1	A06
56	1	3178110	ASSY-EJECTOR,316,24VDC,SS TUBE	ASSEMBLY EJECTOR (AIR ASSEMBLT AND WATER ASSEMBLY)	20-HV-802-6 20-PCV-801-6 20-FV-802-6 20-FV-801-6 20-E-801-6 20-HV-801-6 20-HV-803-6	510464-DS-109 SHEET 1	A06

510464- CAESAR LANES- EQUIPMENT BILL OF MATERIAL- REV C

S. No	Qty	SAP Part No. OR CFO	Primary Description	Complete Description	Tags	Drawing No.	Cutsheet Binder Tab #
			P&ID EJECTOR FOR COMMON PERMEATE HEADER			**510464-DS-109 SHEET 2**	
56	1	3178110	ASSY-EJECTOR,316,24VDC,SS TUBE	ASSEMBLY EJECTOR (AIR ASSEMBLT AND WATER ASSEMBLY)	20-HV-802-7 20-PCV-801-7 20-FV-802-7 20-FV-801-7 20-E-801-7 20-HV-801-7 20-HV-803-7	510464-DS-109 SHEET 2	A06
			P&ID - RAS/DRAIN PUMP AND ACCESSORIES			**510464-DS-110**	
57	4	CFO	SULZER RAS/DRAIN PUMP	Sulzer End Suction Centrifugal Pump Model #APT52-16 (SO) /w Open Impeller,Cast Iron Volute/Stainless Steel Impeller,JC 5610 Cartridge Seal (SiC/SiC/EPDM,No Flush),Standard Baseplate,Severe duty 590RPM 30HP TEFC T 460/60/3 Foot-mounted,Inverter Duty Electric Motor Designed for Max Ras flow of 6,302GPM @ 12ft TD, Minimum RAS Flow : 3,125 GPM Minimum flow (For Drain cycle): 1,900 GPM Minimum continuos stable flow: 1,550 GPM	20-P-501-1/2/3/4	510464-DS-110	A04
58	8	3023136 C/W Diaphragm seal by the vendor	GAUGE-PRESS,316,4.5,BTM,0.5M,15PSI,AS	PRESSURE INDICATOR ASHCROFT 45-1279SS-04L-0/15PSI DIAL SIZE: 4.5" CASE MATERIAL: PHENOLIC WINDOW MATERIAL: GLASS PROCESS CONNECTION: 1/2" NPTM, LOWER WETTED PARTS MATERIAL: 316SS RANGE: 0-15 PSIG Costomized with diaphragm seal by the vendor	20-PI-503-1/2/3/4 20-PI-504-1/2/3/4 RANGE: 0-15 PSIG C/W diaphragm seal by the vendor	510464-DS-110	C04
59	4	CFO	TRANS-FLOW,MAG,16.0FLG,0-7000GPM,PROMAG 400,E+H	Electromagnetic Flow meter Promag E 400, 5W4C4H, DN400 16” Manufacturer: E+H Tags: 20-FIT-507-1, 20-FIT-507-2, 20-FIT-507-3, 20-FIT-507-4 Model: 5W4C4H-C6ILHA0DUA1K0A+DAZ1 C6 Approval: CSA C/US NI Cl.I Div.2 Gr. ABCD I Design: Fixed flange, 0 x DN inlet/ outlet runs L Power Supply: 100-240VAC/24VAC/DC H Output; Input: 4-20mA HART, pulse/freq., switch output A Housing: Compact, alu, coated 0 Cable, Not used D Electrical Connection: Thread NPT1/2 U Liner: Polyurethane A1K Process Connection: Cl.150, carbon steel, flange ASME B16.5 0 Electrodes: 1.4435/316L A Calibration Flow: 0.5% DA >>Customized Parameterization: Output 1 Z1 >>Marking: Tagging (TAG), see additional spec. Details Curr. output 1 Volume flow Current span 4...20 mA NAMUR Value 0/4 mA: 0 USgal/min Value 20 mA: 6500 USgal/min Failsafe mode current output: Max. Damping output 1: 1 s Device 1 1x TAG-stainless steel label (50105107)	20-FIT-507-1/2/3/4 RANGE: 0-7000 GPM	510464-DS-110	C10
60	16	3067262	VALVE-BALL,1",316SS,1PC,THD	VALVE, BALL, PINACLE, 1", 1-PC REDUCED PORT, P/N 13TBV11,NPT, 316SS BODY & TRIM, PTFE SEAT & SEAL, CV = 15.5,800# WOG, WITH LEVER LOCKING HANDLE.	20-HV-503-1/2/3/4 20-HV-504-1/2/3/4 20-HV-506-1/2/3/4 20-HV-505-1/2/3/4	510464-DS-110	B01

510464- CAESAR LANES- EQUIPMENT BILL OF MATERIAL- REV C

S. No	Qty	SAP Part No. OR CFO	Primary Description	Complete Description	Tags	Drawing No.	Cutsheet Binder Tab #
61	4	CFO	CV,WFR,18"CENTERLINE,DI/SS	VALVE, CHECK, WAFER, CENTERLINE PT# 18R1644D5X, DUCTILE IRON BODY, EPDMRESILIENT SEAT, 316SS PLATE, SHAFT AND SPRINGS, 18", 150# RATING.	20-CV-501-1/2/3/4	510464-DS-110	B10
62	4	3090716	HV,KNIFEGATE,18",LUG,UNI-DIR	VALVE, KNIFE GATE, ORBINOX, SERIES 20 MODEL# 20-3434R-18-HW, 18", LUGUNI-DIRECTIONAL, 304SS BODY, 304SS GATE, PTFE IMPREGNATED SYNTHETIC FIBER PACKING, EPDM SEAT, 316SS RETAINER RING, C/W HANDWHEEL OPERATOR, WITH STEM PROTECTOR.	20-HV-501-1/2/3/4	510464-DS-110	B17
63	1	3090709	HV,KNIFEGATE,4",LUG,UNI-DIR	VALVE, KNIFE GATE, ORBINOX, SERIES 20 MODEL# 20-3434R-4-HW, 4", LUGUNI-DIRECTIONAL, 304SS BODY, 304SS GATE, PTFE IMPREGNATED SYNTHETIC FIBER PACKING, EPDM SEAT, 316SS RETAINER RING, C/W HANDWHEEL OPERATOR, WITH STEM PROTECTOR.	16-HV-705	510464-DS-110	B17
64	1	3090263	HV,DIA,4",FLG,PVC/TFE	VALVE, DIAPHRAGM, MANUAL, GEORGE FISCHER TYPE 317, PART# 161 317 340, 4", PVC BODY, TEFLON DIAPHRAGM, FLANGED CONNECTIONS.	16-HV-700	510464-DS-110	B22
65	1	3090804	VALVE-KNIFEGATE,304,4.0,A/A SV,LG,24,UD	VALVE, KNIFE GATE, ORBINOX, SERIES 20 MODEL# 20-3434R, 4", LUGUNI-DIRECTIONAL, 304SS BODY, 304SS GATE, PTFE IMPREGNATED SYNTHETIC FIBER PACKING, EPDM SEAT, 316SS RETAINER RING, C/W RDC PNEUMATIC DOUBLE ACTING CYCLINDER FROM ABOVE ITEM, 4" BORE,C/W NUMATICS 082SA43CM SOLENOID VALVE, NEMA 4, 24VDCC, 1/2" NPT DIN CONNECTION.	16-FV-700	510464-DS-110	B18
66	1	CFO	TRANS-FLOW,MAG,3.0FLG,0-130GPM,PROMAG 400,E+H	Electromagnetic Flow meter Promag E 400, 5W4C80, DN80 3” Manufacturer: E+H Tags: 16-FIT-707 Model: 5W4C80-C6ILHA0DUA1K0A+AADAZ1 C6 Approval: CSA C/US NI Cl.I Div.2 Gr. ABCD I Design: Fixed flange, 0 x DN inlet/ outlet runs L Power Supply: 100-240VAC/24VAC/DC H Output; Input: 4-20mA HART, pulse/freq., switch output A Housing: Compact, alu, coated 0 Cable, Not used D Electrical Connection: Thread NPT1/2 U Liner: Polyurethane A1K Process Connection: Cl.150, carbon steel, flange ASME B16.5 0 Electrodes: 1.4435/316L A Calibration Flow: 0.5% DA >>Customized Parameterization: Output 1 Z1 >>Marking: Tagging (TAG), see additional spec. Details Curr. output 1 Volume flow Current span 4...20 mA NAMUR Value 0/4 mA: 0 USgal/min Value 20 mA: 130 USgal/min Failsafe mode current output: Max. Damping output 1: 1 s Device 1 1x TAG-stainless steel label (50105107)	16-FIT-707 RANGE: 0-130 GPM	510464-DS-110	C10
P&ID - NaOH CHEMICAL SKID						510464-DS-111 SHEET 1	

510464- CAESAR LANES- EQUIPMENT BILL OF MATERIAL- REV C

S. No	Qty	SAP Part No. OR CFO	Primary Description	Complete Description	Tags	Drawing No.	Cutsheet Binder Tab #
69	1	CFO	Floor mounted, Dual metering pump, Chemical injection skid For NaOH (Sodium Hydroxide)	See the drawing 1061538-200 for Unit General arrangment Motor-DrivenMeteringPumpSigmaXControlType#Sigma3-S3Cb Design for two pumps to operate in a Duty/Stand-by configuration with only one pump operating at a time. As standard, the package includes a 0-160 PSI pressure gauge, a calibration column, back pressure valve and a pressure relief valve. Designed for use with ProMinent DN32 sized Sigma pumps. Line Size: 1.5 Inch Piping Material: PVC Seal Materials: EPDM Design Pressure: 150psi Flow: 132.1GPH / 500L/H Pressure: 100PSI / 7BAR	15-P-301-A/B 15-FQI-301 15-HV-300 15-HV-313 15-HV-312 15-HV-322 15-HV-323 15-HV-311 15-HV-321 15-PSV-310-1 15-PSV-320 15-HV-302 15-HV-320 15-HV-301 15-PCV-301	510464-DS-111 SHEET 1	A09
P&ID - CITRIC ACID AND SODIUMHYPOCHLORITE SKIDS						**510464-DS-111 SHEET 2**	
72	1	CFO	PUMP-CENT,DB9V,MAG,1HP,FKM,460/3/60,FT	SYSTEM1.SodiumHypochloriteDosingSkid Chemical: Sodium Hypochlorite 12% Viscosity (at operating temperature): 2.5 cPs Operating flow rate: -Maintenance Clean: 0.52 USGPM-0.62 USGPM -Recovery Clean: 2.88 USGPM-3.41 USGPM Discharge pressure: 20 psig (customer to specify) Operating temperature: 20 °C Ambient temperature: 10-25 °C Area classification: non-hazardous area Location: Indoor heated *Please, see pump performance curve to determine flow capacity and discharge pressure. SCOPE OF SUPPLY Dual-pump (duty/back-up) floor-mounted skid. The system is designed as per attached drawing# 1122683-200 R0-System 1 List of main components: Pump (Qty:2) -Tags: 23-P-101-A/B -Pump type: MAG Drive Pump -Model: DB9V-R-FF-M219 -Body:PVDF -Impeller Bushing: Ceramic -O-Ring: FKM -Connection: FRP ANSI150# -Impeller Size: 4.18" -Magnet Set: 8-Pole -Motor: 1.0 HP, 3 ph/60 Hz/208-230/460V, 3450 rpm, TEFC -Motor Adapter: 56C -VFD: Not Included Skid components: -Piping and fittings: 1/2",1" and 1-1/2" PVC, Sch 80, socket weld, flanged and threaded	23-P-101-A/B 23-HCV-105 23-HCV-106 23-PSV-101 23-STR-103 23-HV-101 23-HV-102 23-HV-103-A/B 23-HV-104-A/B 23-HV-107-A/B 23-HV-106-A/B 23-CV-105-A/B 23-HV-108 23-PI-101 23-PI-102 23-FIT-101 23-FV-105	510464-DS-111 SHEET 2	A09

510464- CAESAR LANES- EQUIPMENT BILL OF MATERIAL- REV C

S. No	Qty	SAP Part No. OR CFO	Primary Description	Complete Description	Tags	Drawing No.	Cutsheet Binder Tab #
75	1	CFO	PUMP-CENT,DB9V,MAG,1HP,EPDM,460/3/60,FT	SYSTEM2.CitricAcidDosingSkid Chemical: Citric Acid 50% Viscosity (at operating temperature): 20 cPs Operating flow rate: -Maintenance Clean: 1.02 USGPM-1.2 USGPM -Recovery Clean: 1.12 USGPM-1.32 USGPM Discharge pressure: 20 psig (customer to specify) Operating temperature: 20 °C Ambient temperature: 10-25 °C Area classification: non-hazardous area Location: Indoor heated *Please, see pump performance curve to determine flow capacity and discharge pressure. SCOPE OF SUPPLY Dual-pump (duty/back-up) floor-mounted skid. The system is designed as per attached drawing# 1122685-200 R0-System 2. List of main components: Pump (Qty:2) -Tags: 23-P-301-A/B -Pump type: MAG Drive Pump -Model: DB9V-R-E-FF-M219 -Body:PVDF -Impeller Bushing: Ceramic -O-Ring: EPDM -Connection: FRP ANSI150# -Impeller Size: 4.18" -Magnet Set: 8-Pole -Motor: 1.0 HP, 3 ph/60 Hz/208-230/460V, 3450 rpm, TEFC -Motor Adapter: 56C -VFD: Included By Prominent VFD Model number: ESV751N01SXC LENZE (SM Vector, 1 HP, 1/60/120/240 V input, 3/230 V output, NEMA 4X (IP65) Enclosure) Skid components -Piping and fittings: 1/2",1" and 1-1/2" PVC, Sch 80, socket weld, flanged and threaded -Suction termination point: 1-1/2" FF flange 150#, PVC -Discharge termination point: 1" FF flange 150#, PVC -Pressure Gauge: For suction line: 2.5" Dial 0-15 PSI stainless steel pressure gauge, liquid filled, with PVC/Teflon isolator, SW, Wika For discharge line: 2.5" Dial 0-60 PSI stainless steel pressure gauge, liquid filled, with PVC/Teflonisolator, SW, Wika -Ball valve: 1/2", 1" and 1-1/2" PVC/EPDM,true union with socket weld ends, Chemline -Ball Check valve:1" PVC/EPDM,true union with socket ends, Chemline -Diaphragm valve:1" PVC/EPDM,true union with socket ends, type 514, Georg Fischer -Actuated ball valve: 1" PVC/EPDMball valve, true union and socket ends with spring return pneumatic actuator with Epoxy and Rilsan coated die cast aluminum body and end caps, stainless steel shaft. Complete with Pad Mounted PilotValve, 120 VC, anodized aluminum NEMA 4X body, 1/4" NPT pressure port, 1/2" NPT DIN electrical connector, w/ manual override, Chemline -Pressure Relief Valve:1/2" PVC/PTFE,2-port, 0-150 psig adjustable, socket weld, non-ASME, ProMinent -Magnetic flowmeter: Krohne, OPTIFLUX 4000, DN 10-150 with grounding disc, IFC 300 flow convertor, 120 VAC power supply, range 0.264-79.252 USGPM,flanged, -Seal material: EPDM/ Teflon -Frame: PE floor-mounted frame without containment or drip tray -Junction Box:NEMA 4X FRP only for flowmeter and actuated valve Ship Loose Item: -Y-strainer: 1-1/2" PVC/EPDM,Chemline, socket weld (Qty:1) Ball Valve: 1-1/2" PVC/Viton, Chemline, socket weld (Qty:1)	23-P-301-A/B 23-HCV-305 23-HCV-306 23-PSV-301 23-STR-303 23-HV-301 23-HV-302 23-HV-303-A/B 23-HV-304-A/B 23-HV-307-A/B 23-HV-306-A/B 23-CV-305-A/B 23-HV-308 23-PI-301 23-PI-302 23-FIT-301 23-FV-305	510464-DS-111 SHEET 2	A09
	1	3084450	SWITCH-FLOAT,KYNAR,240VAC/VDC,KO,20FT	LEVEL SWITCH FLOAT, KOBOLD PT# NCK-2554, 20' CALBE W/ PVC JACKET, 1/8" NPT TOP MOUNTED CONNECTION, 1" X 1" FLOAT. KYNAR, 240 VAC AC/DC @ 0.5 AMPS.	23-LSL-301	510464-DS-111 SHEET 2	C08
P&ID, AIR COMPRESSOR						**510464-DS-112**	

510464- CAESAR LANES- EQUIPMENT BILL OF MATERIAL- REV C

S. No	Qty	SAP Part No. OR CFO	Primary Description	Complete Description	Tags	Drawing No.	Cutsheet Binder Tab #
76	2	CFO	COMPRESSOR-AIR,10 HP,120 GAL,V,ATLAS COPCO	CR10-TSP-120 Gal Vertical 460/3/60-PS,TN4 Atlas Copco 10 HP two-stage pressure lubricated packaged piston air compressor mounted on 120 gallon vertical air vessel. Key feature: • Cast iron design to ensure durability and reliability for all demanding applications • Fully enclosed belt guard for additional equipment safety • ASME safety valves • Stainless steel valves • Aftercooler included for lower compressed air outlet temperature • Start/Stop pressure switch control - Magnetic motor startr with NEMA 4 panel (To be removed from the compressor by Veolia)) • Loose timed drain • Comes equipped with head unloaders • TEFC motor • 1-year bumper-to-bumper warranty Characteristics • Maximum air pressure: 175 psig • Free air delivery:23.8 cfm @ 150 psig • Connection: 1" NPT • Voltage: 480V / 3Ph / 60Hz • Dimensions: 40" x 30" x 77" (L x W x H) • Weight: 599 lbs UD15+ COALESCENT FILTER • 2-in-1 combination coalescing filter • Oil removal down to 0.0009 ppm • Particle removal down to 0.01 µm • Pressure drop indicator on filter	90-AC-001-A/B 90-PSV-001-A/B 90-HV-001-A/B 90-PSL-001-A/B 90-PI-001-A/B 90-F-001-A/B 90-FV-001-A/B 90-TK-001-A/B	**510464-DS-112**	A07
77	2	CFO	DRYER-AIR,FX15,30CFM,ATLAS COPCO	Atlas Copco FX15 refrigerant air dryer. Removes any condensate from the compressed air and provides a steady pressure dew point as low as +4°C. Characteristics • Maximum working pressure: 232 psig • Inlet capacity: 30 cfm • Pressure drop at full flow: 3.63 psi • Connections: 3/4 " NPT • Voltage: 115V / 1Ph / 60Hz • Dimensions: 19.4 x 13.8 x 17.7 inches (L x W x H) • Weight: 44 lbs	90-DR-001-A/B	510464-DS-112	A08
78	4	3088952	VALVE-BALL,316,0.75,2PC THD	VALVE, BALL, 3/4", 2-PC FULL PORT,NPT, 316SS BODY & TRIM, PTFE SEAT & SEAL, CV = 55, 1000#WOG, WITH LEVER LOCKING HANDLE. PINACLE P/N 13TBV2075	90-HV-002-A/B 90-HV-003-A/B	510464-DS-112	B01

510464- CAESAR LANES- EQUIPMENT BILL OF MATERIAL- REV C

S. No	Qty	SAP Part No. OR CFO	Primary Description	Complete Description	Tags	Drawing No.	Cutsheet Binder Tab #
79	1	3148892	ASSY-INSTR,AIR,30CFM,NUM,W/ PNL	MAIN AIR COMPONENT KIT FOR AIR COMPRESSOR INSTRUMENT AIR ASSEMBLY (MOUNTED ON PANEL) MANUFACTURER: ASCO/NUMATICS (EMERSON) MFR. P/N: 1NCS22-118012-2 QTY 1 - P/N: A652A0000012901, 652 AIR PREP ASSEMBLY QTY 1 - P/N: 8652AD004TA0000, 652 DIVERTER BLOCK QTY 1 - P/N: 8652A3M04011100, 652 SHUT-OFF QTY 1 - P/N: 8652AFML4HA000N, 652 COAL FILTER QTY 1 - P/N: 8652A2M040A0000, 652 SHUT-OFF QTY 1 - P/N: 8652AD004TA0000, 652 DIVERTER BLOCK QTY 1 - P/N: 8652AK004N122G0, 652 REGULATOR QTY 2 - P/N: P699AT502467001, SUPPORT BRACKET QTY 1 - P/N: A652A0000012584, 652 AIR PREP ASSEMBLY QTY 1 - P/N: 8652A2M040A0000, 652 SHUT-OFF QTY 1 - P/N: 8652AD004TA0000, 652 DIVERTER BLOCK QTY 1 - P/N: P699AT502467001, SUPPORT BRACKET QTY 1 - P/N: 129-197, 1/2 NPT S.S. PIPE PLUG QTY 4 - P/N: INB103-102-023, MALE CONNECTOR QTY 1 - P/N: NS5752, MOUNTING PLATE QTY 6 - P/N: NS3878, 1/4-20 X 1 1/4 SS SHCS QTY 6 - P/N: NS2621, 1/4-20 SS HEX NUT QTY 2 - P/N: NS4276 or AP25P-04-F2-QD, PRESSURE SWITCH QTY 2 - P/N: NS5751, 5M CABLE QTY 1 - P/N: NS3567, REDUCER BUSHING QTY 3 - P/N: QRTU50BL-1, 1/2 OD BLUE TUBING _____ MAX. FLOW: 30.5 SCFM (864 L/min), P1 = 91 PSI (6.3 bar) w/ ΔP = 5 PSI (0.35 bar) AMBIENT TEMPERATURE RANGE: 35° to 122° F (1.7 to 50 deg C) PRIMARY COALESCING FILTER PARTICLE SIZE: 0.3 µm	90-HV-005 90-HV-006 90-HV-004 90-F-002 90-PDI-001 90-PCV-001 90-PSLL-002 90-PSL-003	510464-DS-112	C18

510464- CAESAR LANES- EQUIPMENT BILL OF MATERIAL- REV C							
S. No	Qty	SAP Part No. OR CFO	Primary Description	Complete Description	Tags	Drawing No.	Cutsheet Binder Tab #

510464- CAESAR LANES- EQUIPMENT BILL OF MATERIAL- REV C							
S. No	Qty	SAP Part No. OR CFO	Primary Description	Complete Description	Tags	Drawing No.	Cutsheet Binder Tab #

510464- CAESAR LANES- EQUIPMENT BILL OF MATERIAL- REV C							
S. No	Qty	SAP Part No. OR CFO	Primary Description	Complete Description	Tags	Drawing No.	Cutsheet Binder Tab #

510464- CAESAR LANES- EQUIPMENT BILL OF MATERIAL- REV C							
S. No	Qty	SAP Part No. OR CFO	Primary Description	Complete Description	Tags	Drawing No.	Cutsheet Binder Tab #

510464- CAESAR LANES- EQUIPMENT BILL OF MATERIAL- REV C							
S. No	Qty	SAP Part No. OR CFO	Primary Description	Complete Description	Tags	Drawing No.	Cutsheet Binder Tab #

510464- CAESAR LANES- EQUIPMENT BILL OF MATERIAL- REV C							
S. No	Qty	SAP Part No. OR CFO	Primary Description	Complete Description	Tags	Drawing No.	Cutsheet Binder Tab #

510464- CAESAR LANES- EQUIPMENT BILL OF MATERIAL- REV C							
S. No	Qty	SAP Part No. OR CFO	Primary Description	Complete Description	Tags	Drawing No.	Cutsheet Binder Tab #

510464- CAESAR LANES- EQUIPMENT BILL OF MATERIAL- REV C							
S. No	Qty	SAP Part No. OR CFO	Primary Description	Complete Description	Tags	Drawing No.	Cutsheet Binder Tab #

510464- CAESAR LANES- EQUIPMENT BILL OF MATERIAL- REV C							
S. No	Qty	SAP Part No. OR CFO	Primary Description	Complete Description	Tags	Drawing No.	Cutsheet Binder Tab #

510464- CAESAR LANES- EQUIPMENT BILL OF MATERIAL- REV C							
S. No	Qty	SAP Part No. OR CFO	Primary Description	Complete Description	Tags	Drawing No.	Cutsheet Binder Tab #

510464- CAESAR LANES- EQUIPMENT BILL OF MATERIAL- REV C							
S. No	Qty	SAP Part No. OR CFO	Primary Description	Complete Description	Tags	Drawing No.	Cutsheet Binder Tab #

510464- CAESAR LANES- EQUIPMENT BILL OF MATERIAL- REV C							
S. No	Qty	SAP Part No. OR CFO	Primary Description	Complete Description	Tags	Drawing No.	Cutsheet Binder Tab #

510464- CAESAR LANES- EQUIPMENT BILL OF MATERIAL- REV C							
S. No	Qty	SAP Part No. OR CFO	Primary Description	Complete Description	Tags	Drawing No.	Cutsheet Binder Tab #

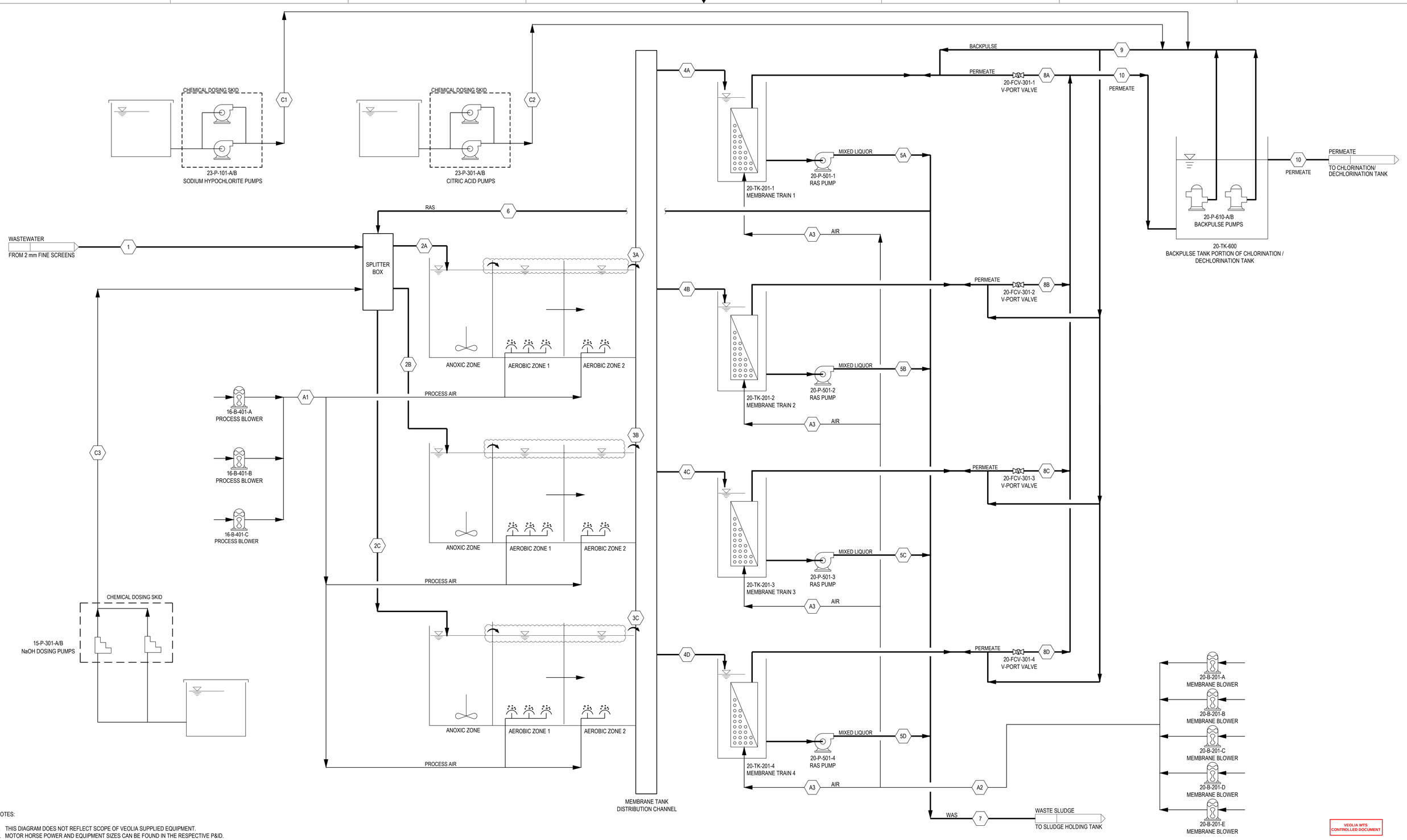

NOTES:

1. THIS DIAGRAM DOES NOT REFLECT SCOPE OF VEOLIA SUPPLIED EQUIPMENT.
2. MOTOR HORSE POWER AND EQUIPMENT SIZES CAN BE FOUND IN THE RESPECTIVE P&ID.

VEOLIA WTS CONTROLLED DOCUMENT

REV	DESCRIPTION	ECO	DWN	APPR	APPR	DATE
D	ISSUED FOR APPROVAL		MA	JK	RP	02 DEC 24
C	ISSUED FOR APPROVAL		MA	RP	RP	14 NOV 24
B	ISSUED FOR APPROVAL		PT	-	-	20 MAR 23
A	INITIAL RELEASE		SRP	-	-	10 MAR 23

PROPRIETARY AND CONFIDENTIAL: THIS DRAWING AND ALL INFORMATION AND KNOWLEDGE CONTAINED OR REFERRED HEREIN ARE THE CONFIDENTIAL AND PROPRIETARY PROPERTY OF VEOLIA AND AS SUCH ARE INSTRUMENTS OF SERVICE FOR USE SOLELY WITH RESPECT TO THIS PROJECT. THESE INSTRUMENTS OF SERVICE SHALL NOT BE REPRODUCED, TRANSMITTED, DISCLOSED OR USED OTHERWISE IN WHOLE OR IN PART, WITHOUT PRIOR WRITTEN AGREEMENT BY VEOLIA AND MUST BE IMMEDIATELY RETURNED OR DESTROYED UPON REQUEST.

TOLERANCES UNLESS NOTED
DECIMALS: .X, .XX, .XXX
ANGLES
FRAC

VEOLIA

CUSTOMER INFORMATION
CAESARS LANE
WTF MBR SYSTEM

PROCESS FLOW DIAGRAM

DRAWING NUMBER: 510464-WTS-PR-SYS-EN11-DI-001
REVISION: D
REF.: -
DOC. OWNER: -
PROJECT NO.: 510464
PART/MATERIAL NO.:
SCALE: NONE
SIZE: D
SHEET: 1 OF 2
LAST SAVED: Monday, December 2, 2024 8:57:34 PM

FILE LOCATION: C:\Users\YSA746\AppData\Local\Temp\AcPublish_23888\510464-WTS-PR-SYS-EN11-DI-001.dwg

PFD Flow Data

Caesar's Lane

510464

Stream ID	Stream Description		Type of Flow	Units	MIN Minimum Equipment Sizing	Init ADF Initial Flow	ADF Average Day Flow	MMF Maximum Month Flow	MMF-1 Maximum Month Flow With One Train Offline	MDF Maximum Day Flow	MDF N-1 Maximum Day Flow With One Train Offline	PHF Peak Hour Flow	Buildout Maximum Equipment Sizing
	Plant Capacity			**MGD**	**1.00**	**3.00**	**5.00**	**8.00**	**8.00**	**11.00**	**11.00**	**16.50**	**16.50**
	Number of Bio Trains				**3**	**3**	**3**	**3**	**3**	**3**	**3**	**3**	**3**
-	**Number of membrane trains running**		-	*n*	**1**	**2**	**4**	**4**	**3**	**4**	**3**	**4**	**4**
-	**Modules per Train**		-	*n*	*352*	352	352	352	352	352	352	352	384
1	Plant Raw Influent Flow (Total)		Continuous	gpm	694	2,083	3,472	5,556	5,556	7,639	7,639	11,458	11,458
2A/B/C	Bioreactor Influent Flow (Per Bio Train)		Continuous	gpm	231	694	1,157	1,852	1,852	2,546	2,546	3,819	3,819
3A/B/C	Bioreactor Overflow (Per Bio Train)		Continuous	gpm	231	694	1,157	1,852	1,852	2,546	2,546	3,819	3,819
-	Membrane Recycle Ratio [R]		-	-	4.5	7.0	4.0	4.0	3.0	3.0	2.3	2.2	2.2
-	Membrane Feed Activated Sludge Flow (Total) [(R+1) × Q]		Continuous	gpm	3,819	16,667	17,361	27,778	22,222	30,556	25,208	36,667	36,667
4A/B/C/D	Membrane Feed Activated Sludge Flow (Per Train) [(R+1) × Q]		Continuous	gpm	3,819	8,333	4,340	6,944	7,407	7,639	8,403	9,167	9,167
5A/B/C/D	Membrane Recirculated Activated Sludge (RAS) Flow (Per Train) [R × Q]		Continuous	gpm	3,125	7,292	3,472	5,556	5,556	5,729	5,856	6,302	6,302
	Membrane Tank Drain Flow		Intermittent	gpm					1,995				1,995
6	Membrane Recirculated Activated Sludge (RAS) Flow (Total) [R × Q]		Continuous	gpm	3,125	14,583	13,889	22,222	16,667	22,917	17,569	25,208	25,208
7	Waste Activated Sludge (WAS)	Volume	Daily Average	gpd	4,900	11,000	28,500	50,500	50,500	70,000	70,000	70,000	70,000
		Wasting Duration Per Day	-	hours	8	8	8	8	8	8	8	8	8
		Flow	Intermittent	gpm	10	23	59	105	105	146	146	146	146
8A/B/C/D	Permeate Flow (Per Train)	Net [Q]	Net	gpm	694	1,042	868	1,389	1,852	1,910	2,546	2,865	2,865
		Instantaneous	Instantaneous	gpm	736	1,104	920	1,625	2,167	2,234	2,979	3,352	3,438
9	Backpulse Flow	Backpulse	Intermittent	gpm					3,394				3,703
		Maintenance Clean	Intermittent	gpm					1,555				1,696
		Recovery Clean	Intermittent	gpm					1,555				1,696
10	Permeate Flow (Total)	Net [Q]	Net	gpm	694	2,083	3,472	5,556	5,556	7,639	7,639	11,458	11,458
		Instantaneous	Instantaneous	gpm	736	2,208	3,681	6,500	6,500	8,938	8,938	13,406	13,750
Chemical Flows													
C1	Sodium Hypochlorite (12% w/v) (10.3% w/w solution)	Maintenance Clean	Intermittent	gpm					2.58				2.82
		Recovery Clean	Intermittent	gpm					14.22				15.51
C2	Citric Acid (50% w/w solution)	Maintenance Clean	Intermittent	gpm					5.02				5.47
		Recovery Clean	Intermittent	gpm					5.52				6.02
C3	NaOH (25%)		Continuous	gpm					TBD				1.67
Air Flows													
A1	Process Air to Aerobic Tank		Continuous	scfm	4,076	4,076	4,076	4,076	4,076	4,076	4,076	4,076	4,076
A2	Membrane Air (Total)	Leap Low	Continuous	icfm	740	1,480	2,961	2,961	2,221	2,961	2,221	2,961	3,221
		Leap High	Continuous	icfm	1,480	2,961	5,922	5,922	4,441	5,922	4,441	5,922	6,442
A3	Membrane Air (Per Train)	Leap Low	Continuous	icfm					740				805
		Leap High	Continuous	icfm					1,480				1,611

REV	DESCRIPTION	ECO	DWN	APPR	APPR	DATE
D	ISSUED FOR APPROVAL		MA	JK	RP	02 DEC 24
C	ISSUED FOR APPROVAL		MA	RP	RP	14 NOV 24
B	ISSUED FOR APPROVAL		PT	-	-	20 MAR 23
A	INITIAL RELEASE		SRP	-	-	10 MAR 23

PROPRIETARY AND CONFIDENTIAL: THIS DRAWING AND ALL INFORMATION AND KNOWLEDGE CONTAINED OR REFERRED HEREIN ARE THE CONFIDENTIAL AND PROPRIETARY PROPERTY OF VEOLIA AND AS SUCH ARE INSTRUMENTS OF SERVICE FOR USE SOLELY WITH RESPECT TO THIS PROJECT. THESE INSTRUMENTS OF SERVICE SHALL NOT BE REPRODUCED, TRANSMITTED, DISCLOSED OR USED OTHERWISE IN WHOLE OR IN PART, WITHOUT PRIOR WRITTEN AGREEMENT BY VEOLIA AND MUST BE IMMEDIATELY RETURNED OR DESTROYED UPON REQUEST.

TOLERANCES UNLESS NOTED
DECIMALS .X .XX .XXX
ANGLES
FRAC

VEOLIA

CUSTOMER INFORMATION
CAESARS LANE
WTF MBR SYSTEM

PROCESS FLOW TABLE

DRAWING NUMBER: 510464-WTS-PR-SYS-EN11-DI-001
REVISION: D
REF.: -
DOC. OWNER: -
PROJECT NO.: 510464
PART/MATERIAL NO.:
SCALE: NONE
SIZE: D
SHEET: 2 OF 2
LAST SAVED: Monday, December 2, 2024 8:57:34 PM

FILE LOCATION: C:\Users\YSA7A6\AppData\Local\Temp\AcPublish_23888\510464-WTS-PR-SYS-EN11-DI-001.dwg

VEOLIA
Water Technologies & Solutions

CAESARS LANE WASTEWATER TREATMENT FACILITY (WTF) MBR SYSTEM

PIPING & INSTRUMENTATION DIAGRAMS

VEOLIA WTS CONTROLLED DOCUMENT

REV	DESCRIPTION	ECO	DWN	APPR	APPR	DATE
D	REVISED AS NOTED	-	SBN	MR	KK	25 NOV 24
C	REVISED AS NOTED	-	AS	MR	KK	23 JAN 24
B	REVISED AS NOTED	-	PT	MR	KK	23 MAR 23
A	INITIAL RELEASE	-	PT	MR	KK	17 FEB 23

TOLERANCES UNLESS NOTED
DECIMALS: .X, .XX, .XXX
ANGLES
FRAC

PROPRIETARY AND CONFIDENTIAL: THIS DRAWING AND ALL INFORMATION AND KNOWLEDGE CONTAINED OR REFERRED HEREIN ARE THE CONFIDENTIAL AND PROPRIETARY PROPERTY OF VEOLIA AND AS SUCH ARE INSTRUMENTS OF SERVICE FOR USE SOLELY WITH RESPECT TO THIS PROJECT. THESE INSTRUMENTS OF SERVICE SHALL NOT BE REPRODUCED, TRANSMITTED, DISCLOSED OR USED OTHERWISE IN WHOLE OR IN PART, WITHOUT PRIOR WRITTEN AGREEMENT BY VEOLIA AND MUST BE IMMEDIATELY RETURNED OR DESTROYED UPON REQUEST.

VEOLIA

CUSTOMER INFORMATION
CAESARS LANE WTF
MBR SYSTEM

P&ID
TITLE PAGE

DRAWING NUMBER: 510464-WTS-PR-SYS-EN21-DS-100
REVISION: D
REF.: -
DOC. OWNER: -
PROJECT NO.: 510464
PART/MATERIAL NO.:
SCALE: NONE
SIZE: D
SHEET: 1 OF 3

FILELOCATION:C:_ADSKVault\NAM\510464 - Caesars Lane WWTP\1. PFD and P&ID\510464-WTS[PR-SYS-EN21-DS-100.dwg
LAST SAVED: Monday, November 25, 2024 5:05:20 PM

CONTROL VALVE ACTUATORS

ACTUATED VALVE OPERATION IS NORMALLY CLOSED UNLESS MARKED OTHERWISE

- PISTON DOUBLE ACTING
- PISTON SPRING TO OPEN
- PISTON SPRING TO CLOSE
- DIAPHRAGM DOUBLE ACTING
- DIAPHRAGM SPRING TO OPEN
- DIAPHRAGM SPRING TO CLOSE
- DIAPHRAGM DOUBLE BALANCING
- BACK PRESSURE CONTROL (EXTERNAL REGULATING)
- BACK PRESSURE CONTROL (INTERNAL REGULATING)
- PRESSURE REDUCING (EXTERNAL REGULATING)
- PRESSURE REDUCING (INTERNAL REGULATING)
- M — ROTARY MOTOR ANALOG
- M — ROTARY MOTOR DIGITAL
- I/P — I/P CONVERTER
- POSITIONER
- TRAVEL STOP
- GEAR — MANUAL GEAR WHEEL
- CHAIN — MANUAL CHAIN WHEEL
- S, A, B — SOLENOID
- S, A, B, C — SOLENOID 3 WAY
- S, D, A, B, C — SOLENOID 4 WAY

VALVE SYMBOLS

OPEN DURING NORMAL PROCESS OPERATION — CLOSED DURING NORMAL PROCESS OPERATION

- GATE (OR GENERIC)
- BALL
- BUTTERFLY
- NEEDLE
- GLOBE
- DIAPHRAGM
- ANGLE
- PLUG
- PINCH
- V–BALL
- K — KNIFE GATE — K
- UPWARD OPENING SLIDING GATE
- DOWNWARD OPENING SLIDING GATE
- MANUAL BLAST GATE
- BACKFLOW PREVENTER
- CHECK
- INJECTION QUILL
- FOOT
- FLOAT
- MUD
- 3 WAY
- 4 WAY
- 5 WAY
- 6 WAY
- 2 VALVE MANIFOLD
- 3 VALVE MANIFOLD
- 5 VALVE MANIFOLD
- SAMPLE

RELIEF

- PRESSURE SAFETY
- VACUUM SAFETY
- MULTIFUNCTION
- PRESSURE RUPTURE DISK
- VACUUM RUPTURE DISK
- AIR RELEASE
- VACUUM BREAKER
- VENT — VENT
- GROUND
- DRAIN — DRAIN

PUMPS, BLOWERS, & COMPRESSORS

- CENTRIFUGAL PUMP
- CENTRIFUGAL/ REGENERATIVE BLOWER
- PROPELLER PUMP
- ROTARY LOBE COMPRESSOR BLOWER
- METERING PUMP
- AIR OPERATED DOUBLE DIAPHRAGM PUMP
- VACUUM PUMP (DRY)
- POSITIVE DISPLACEMENT PUMP
- VACUUM PUMP LIQUID RING
- VERTICAL TURBINE PUMP
- AIR COMPRESSOR PISTON
- CAN PUMP
- AIR COMPRESSOR ROTARY SCREW
- WELL PUMP
- REFRIGERATED AIR DRYER
- DRUM PUMP
- FAN
- HP / LP — ERI PRESSURE EXCHANGER
- SUBMERSIBLE SUMP PUMP
- M — MOTOR
- HP / LP — HYDRAULIC PRESSURE BOOSTER
- PROGRESSIVE CAVITY PUMP

FLOW ELEMENT

- PADDLE WHEEL
- ANNUBAR
- FLOW NOZZLE
- FLUME
- M — MAGNETIC
- PITOT
- SONIC/ ULTRASONIC
- TURBINE
- VENTURI TUBE
- VORTEX
- MASS FLOW/ CORIOLIS
- ROTAMETER
- FG — IN–LINE FLOW GLASS
- FLOW STRAIGHTENER
- FIXED ORIFICE
- ADJUSTABLE ORIFICE
- RESTRICTED ORIFICE
- RESTRICTED ORIFICE ANGLE
- ORIFICE PLATE QUICK–CHANGE

CONNECTIONS

- FLANGE
- FLANGE BLIND
- MECHANICAL COUPLING OR VICTAULIC
- MECHANICAL COUPLING OR VICTAULIC PLUG
- SANITARY
- SANITARY PLUG
- THREADED
- THREADED PLUG
- SOCKET
- UNION
- CAMLOCK
- CAMLOCK PLUG
- HOSE BARB
- WELDED PIPE CAP
- PLAIN END PIPE COUPLING
- REDUCER
- COMPRESSION FITTING
- COMPRESSION FITTING PLUG
- SPECTACLE BLIND OPEN
- SPECTACLE BLIND CLOSED

HEATING

- TANK HEATER
- HEAT EXCHANGER
- IN–LINE HEATER
- PLATE & FRAME HEAT EXCHANGER
- DESUPERHEATER

FILTERS

- FIXED SCREEN
- TOP HAT STRAINER
- BAR SCREEN
- HEPA FILTER
- Y STRAINER
- CONICAL STRAINER
- F — FILTER
- PUMP SCREEN
- ST — STEAM TRAP
- R/T — RESIN TRAP

RO/UF

- FOUR PORT HOUSING
- TWO PORT HOUSING
- END PORT HOUSING
- MEMBRANE MODULE

VESSELS/TRIM

- CONICAL BOTTOM TANK
- TANK (CLOSED TOP)
- TANK (OPEN TOP)
- DOMED TANK
- PRESSURE VESSEL HORIZONTAL/ VERTICAL OR RECEIVER
- M — PROPELLER AGITATOR
- VB — VORTEX BREAKER
- VESSEL INSULATION
- LEVEL GLASS
- ELLIPTICAL MANWAY
- MANHOLE
- MANHOLE W/ DAVIT ARM
- VESSEL SIGHT GLASS
- WATER LEVEL
- LADDER/ PLATFORM

MISCELLANEOUS

- MUFFLER
- EDUCTOR
- STATIC MIXER
- EXPANSION JOINT
- SILENCER
- VIBRATION ISOLATOR
- HIGH PRESSURE FLEXIBLE CONNECTOR
- INJECTION SPARGER
- DIAPHRAGM SEAL/ GAUGE GUARD
- PULSATION DAMPENER
- SPRAYER NOZZLE
- DESICCANT AIR DRYER
- HYDROMETER POT
- COARSE BUBBLE DIFFUSER ELEVATION VIEW
- FINE BUBBLE DIFFUSER ELEVATION VIEW
- THERMOWELL
- TOP MOUNT LEVEL SWITCH
- ULTRASONIC LEVEL
- CALIBRATION COLUMN
- XXX / XXX — PIG TAIL
- ION EXCHANGE BOTTLE

SCOPE BREAK

- CLIENT/OTHER
- SUEZ

MATERIAL BREAK

- MATERIAL A — MATERIAL B

PIPE INSULATION/ DOUBLE CONTAINMENT

- PP 2" ("PP" INDICATES PERSONNEL PROTECTION –OPTIONAL)

LINE TYPES

- PRIMARY PROCESS
- SECONDARY PROCESS
- SAMPLE/DRAINS/ VENTS/ETC
- PRIMARY PROCESS (BY OTHERS)
- SECONDARY PROCESS (BY OTHERS)
- FUTURE
- EQUIPMENT LIMIT OR BOUNDARY LINE
- EQUIPMENT
- EQUIPMENT (BY OTHERS)
- FLEX HOSE/TUBING
- SOFTWARE–LINK
- ELECTRICAL
- ELECTROMAGNETIC OR SONIC SIGNAL (WIRELESS)
- PNEUMATIC
- HYDRAULIC SIGNAL
- CAPILLARY TUBING
- HEAT–TRACING
- STEAM–TRACE
- ELECTRICAL–TRACE

MISCELLANEOUS LINE OBJECTS

- SLOPE
- CONTINUATION SYMBOL
- CONTINUATION SYMBOL
- CROSSOVER LINE
- REVISION CLOUD
- A — REVISION TRIANGLE

REV	DESCRIPTION	ECO	DWN	APPR	APPR	DATE
D	REVISED AS NOTED	-	SBN	MR	KK	25 NOV 24
C	REVISED AS NOTED	-	AS	MR	KK	23 JAN 24
B	REVISED AS NOTED	-	PT	MR	KK	23 MAR 23
A	INITIAL RELEASE	-	PT	MR	KK	17 FEB 23

TOLERANCES UNLESS NOTED
DECIMALS .X .XX .XXX — ANGLES — FRAC

PROPRIETARY AND CONFIDENTIAL: THIS DRAWING AND ALL INFORMATION AND KNOWLEDGE CONTAINED OR REFERRED HEREIN ARE THE CONFIDENTIAL AND PROPRIETARY PROPERTY OF VEOLIA AND AS SUCH ARE INSTRUMENTS OF SERVICE FOR USE SOLELY WITH RESPECT TO THIS PROJECT. THESE INSTRUMENTS OF SERVICE SHALL NOT BE REPRODUCED, TRANSMITTED, DISCLOSED OR USED OTHERWISE IN WHOLE OR IN PART, WITHOUT PRIOR WRITTEN AGREEMENT BY VEOLIA AND MUST BE IMMEDIATELY RETURNED OR DESTROYED UPON REQUEST.

VEOLIA

CUSTOMER INFORMATION

CAESARS LANE WTF
MBR SYSTEM

P&ID

LEGENDS & SYMBOLS

DRAWING NUMBER: 510464-WTS-PR-SYS-EN21-DS-100
REVISION: D
REF.: -
DOC. OWNER: -
PROJECT NO.: 510464
PART/MATERIAL NO.:
SCALE: NONE
SIZE: D
SHEET: 2 OF 3

FILE LOCATION: C:_ADSKVault\NAM\S10464 - Caesars Lane WWTP\1. PFD and P&ID\510464-WTS-PR-SYS-EN21-DS-100.dwg
LAST SAVED: Monday, November 25, 2024 5:05:20 PM

INSTRUMENT FUNCTIONS

FIRST LETTER	MEASURED OR INITIATING VARIABLE	A: ALARM	A: HIGH- HIGH ALARM	A: HIGH ALARM	A: LOW ALARM	A: LOW-LOW ALARM	A: SENSOR FAULT ALARM	C: BLIND CONTROLLER	C: INDICATING CONTROLLER	E: SENSOR (PRIMARY ELEMENT)	G: GLASS	I: INDICATOR	K: CONTROL STATION	L: PILOT LIGHT	Q: TOTALIZER	R: RECORD	S: SWITCH	S: HIGH-HIGH SWITCH	S: HIGH SWITCH	S: LOW SWITCH	S: LOW-LOW SWITCH	T: BLIND TRANSMITTER	T: INDICATING TRANSMITTER	Y: SOLENOID VALVE (PILOT), RELAY, COMPUTATION, CONVERTER	V,Z: CONTROL VALVE	V,Z: VALVE	V,Z: FINAL CONTROL ELEMENT	SPECIAL IDENTIFICATION: SYMBOL	SPECIAL IDENTIFICATION: DESCRIPTION
A	ANALYSIS	AA	AAHH	AAH	AAL	AALL	AAT	AC	AIC	AE		AI		AL		AR	AS	ASHH	ASH	ASL	ASLL	AT	AIT	AY	ACV	AV	AZ		
B	BURNER, COMBUSTION																												
C	USER'S CHOICE																												
D	USER'S CHOICE																												
E	VOLTAGE	EA	EAHH	EAH	EAL	EALL	EAT	EC	EIC	EE		EI	EK	EL		ER	ES	ESHH	ESH	ESL	ESLL	ET	EIT	EY			EZ		
F	FLOW	FA	FAHH	FAH	FAL	FALL	FAT	FC	FIC	FE	FG	FI		FL	FQI	FR	FS	FSHH	FSH	FSL	FSLL	FT	FIT	FY	FCV	FV		FO	ORIFICE PLATE
FF	FLOW RATIO	FFA	FFAHH	FFAH	FFAL	FFALL		FFC	FFIC			FFI				FFR	FFS	FFSHH	FFSH	FFSL	FFSLL			FFY	FFCV				
G	USER'S CHOICE																												
H	HAND	HA						HC	HIC					HL			HS								HCV	HV		HMS	PUSHBUTTON SWITCH
I	CURRENT (ELECTRICAL)	IA	IAHH	IAH	IAL	IALL	IAT	IC	IIC	IE		II	IK	IL		IR	IS	ISHH	ISH	ISL	ISLL	IT	IIT	IY			IZ		
J	POWER	JA	JSHH	JAH	JAL	JALL	JAT	JC	JIC	JE		JI	JK	JL	JQI	JR	JS	JSHH	JSH	JSL	JSLL	JT	LIT	JY			JZ		
K	TIME SCHEDULE	KA										KI		KL			KS							KY					
KQ	TIME TOTAL	KQA	KQAHH	KQAH	KQAL	KQALL						KQI		KQL		KQR	KQS	KQSHH	KQSH	KQSL	KQSLL								
L	LEVEL	LA	LAHH	LAH	LAL	LALL	LAT	LC	LIC	LE	LG	LI		LL		LR	LS	LSHH	LSH	LSL	LSLL	LT	LIT	LY	LCV	LV		LKx	LEVEL RATE-OF-CHANGE
M	MOTOR CONTROL												MK				MS												
N	USER'S CHOICE																												
O	USER'S CHOICE																												
P	PRESSURE OR VACUUM	PA	PAHH	PAH	PAL	PALL	PAT	PC	PIC			PI		PL		PR	PS	PSHH	PSH	PSL	PSLL	PT	PIT	PIT	PY	PV		PSV	PRESSURE SAFETY VALVE
PD	PRESSURE DIFFERENTIAL	PDA	PDAHH	PDAH	PDAL	PDALL	PDAT	PDC	PDIC			PDI		PDL		PDR	PDS	PDSHH	PDSH	PDSL	PDSLL	PDT	PDIT	PDY	PDCV				
Q	QUANTITY														QQI														
R	RADIATION																												
S	SPEED OR FREQUENCY	SA	SAHH	SAH	SAL	SALL	SAT	SC	SIC	SE		SI	SK	SL		SR	SS	SSHH	SSH	SSL	SSLL	ST	SIT	SY	SCV		SZ		
T	TEMPERATURE	TA	TAHH	TAH	TAL	TALL	TAT	TC	TIC	TE		TI		TL		TR	TS	TSHH	TSH	TSL	TSLL	TT	TIT	TY	TCV	TV	TZ	TW	THERMOWELL
U	MULTI-VARIABLE																					UT	UIT						
V	VIBRATION OR MECH. ANALYSIS	VA	VAHH	VAH			VAT			VE		VI		VL		VR	VS	VSHH	VSH			VT	VIT	VY					
W	WEIGHT OR FORCE	WA	WAHH	WAH	WAL	WALL	WAT	WC	WIC	WE		WI		WL	WQI	WR	WS	WSHH	WSH	WSL	WSLL	WT	WIT	WY	WCV	WV	WZ		
X	UNCLASSIFIED																												
Y	EVENT, STATE OR PRESENCE	YA										YI	YK	YL		YR	YS							YY					
Z	POSITION OR DIMENSION	ZA	ZAO=OPEN		ZAC=CLOSE		ZAT	ZC	ZIC	ZE	ZG	ZI	ZK	ZL		ZR	ZS	ZSO=OPEN		ZSC=CLOSE		ZT	ZIT	ZY	ZCV	ZV	ZZ	ZKx	POSITION RATE-OF-CHANGE

INSTRUMENT SYMBOLS

- PANEL MOUNT INSTRUMENT
- FIELD MOUNT OR PRIMARY INSTRUMENT
- BEHIND PANEL INSTRUMENT
- PILOT LIGHT
- PLC FUNCTION WITH DISPLAY
- PLC FUNCTION, BLIND
- PLC INPUT/OUTPUT

DI _ DISCRETE INPUT
DO _ DISCRETE OUTPUT
AI _ ANALOG INPUT
AO _ ANALOG OUTPUT

FUNCTIONS

- I — UNDEFINED INTERLOCK LOGIC
- Σ — SUMMING

CONTINUATION ARROWS

SERVICE
A | SHEET X
FLOW:
PRESSURE:
TEMP:
FLOW-SINGLE DIRECTION

SERVICE
A | SHEET X
FLOW:
PRESSURE:
TEMP:
FLOW-BOTH DIRECTIONS

A — TRANSFER ARROW TO SAME SHEET

1 | PID NUMBER SHEET X — ELECTRICAL TRANSFER ARROW TO DIFFERENT PID DOCUMENT

1 — ELECTRICAL TRANSFER ARROW TO SAME PID DOCUMENT

EQUIPMENT / INSTRUMENT TAGGING SCHEME

11-XXX-222A-3

- 11 — IDENTICAL SKID/TRAIN IDENTIFIER (IF NECESSARY)
- XXX — MULTIPLE INSTRUMENT IDENTIFIER (IF NECESSARY)
- 222 — EQUIPMENT NUMBER/ INSTRUMENT LOOP NUMBER
- A — EQUIPMENT ABBREVIATION/ INSTRUMENT FUNCTION
- 3 — PROCESS AREA

LINE IDENTIFIER

X"-XXPPPA-SNN

- X" — LINE CLASS SPECIFICATION
- SNN — SCHEDULE (OPTIONAL)
- S — SERVICE DIFFERNTIATOR (OPTIONAL)
- PPP — PR CODE (OPTIONAL)
- A — MATERIAL CODE
- XX — PIPE SIZE

MATERIAL CODE	MATERIAL
	CONCRETE
CC	METALLIC
AUST	AUSTENITIC STAINLESS STEEL
AY	ALLOY 20
CI	CAST IRON
CS	CARBON STEEL
CU	COPPER
DI	DUCTILE IRON
DL	PVDF LINED
DUPL	DUPLEX STAINLESS STEEL
HC	HASTELLOY C
PL	POLYPROPYLENE LINED
SA	304, 304L STAINLESS STEEL
SB	AL-6XN
SC	254-SMO
SD	2205
SE	2507
SF	904L
SG	ZERON 100
SS	316, 316L STAINLESS STEEL
SUAU	SUPER AUSTENITIC STAINLESS STEEL
TL	PTFE LINED
	PLASTIC
CP	CPVC
FR	FIBER REINFORCED PLASTIC
PE	POLYETHYLENE
PP	POLYPROPYLENE
PV	PVC
PD	PVDF
PT	PTFE

PR CODE	CLASS
	METALLIC
125	ANSI CLASS 125
150	ANSI CLASS 150
300	ANSI CLASS 300
400	ANSI CLASS 400
600	ANSI CLASS 600
900	ANSI CLASS 900
	PLASTIC
040	SCHEDULE 40
080	SCHEDULE 80
120	SCHEDULE 120
D64	SDR 64
D41	SDR 41
D32	SDR 32.5
D26	SDR 26
D21	SDR 21
D17	SDR 17
D13	SDR 13.5
	MULTIPLE
P06	PN6
P10	PN10
P16	PN16
P20	PN20
P50	PN50
P68	PN68
P100	PN100
A00	ATMOSPHERIC
V00	VACUUM

EQUIPMENT ABBREVIATIONS

AB	ABSORBER
AC	AIR COMPRESSOR
ACF	ACTIVATED CARBON FILTER
AER	AERATOR
ARV	AIR RELEASE VALVE
B	BLOWER
BF	BAG FILTER
C	CENTRIFUGE, CYCLONE
CD	CONDENSER
CDM	CATALYTIC DESTRUCT MODULE
CF	CARTRIDGE FILTER
CH	CHILLER
CHL	CHLORINATOR
CIP	CLEAN-IN-PLACE
CL	CLARIFIER
CONV	CONVEYOR
CORS	CATALYTIC OXYGEN REMOVAL SYSTEM
CP	CONTROL PANEL
CR	CRYSTALIZER
CS	CHEMICAL SYSTEM
CT	COOLING TOWER, CARBON TOWER
CV	CHECK VALVE
DAF	DISSOLVED AIR FLOATATION
DO	DISSOLVED OXYGEN
DMF	DUAL MEDIA FILTER
DR	AIR DRIER
E	EDUCTOR
EAF	ENTRAPPED AIR FLOATATION
ED	ELECTRODIALYSIS
EDI	ELECTRODEIONIZATION
EDR	ELECTRODIALYSIS REVERSAL
EV	EVAPORATOR
F	FILTER
FAN	FAN
F.C.	FAIL CLOSE
FDA	FORCED DRAFT AERATOR, DEGASIFIER
F.O.	FAIL OPEN
F.L.	FAIL LAST
FP	FILTER PRESS
GF	GRAVITY FILTER
H	HEATER
HF	HEPA FILTER
HMI	HUMAN-MACHINE INTERFACE
HOA	HAND-OFF-AUTO
HPB	HYDRAULIC PRESSURE BOOSTER
HX	HEAT EXCHANGER
IAS	INSTRUMENT AIR SUPPLY
IQ	INJECTION QUILL, INJECTION CHECK VALVE
IX	ION EXCHANGER
LS	LIME SOFTENER
M	MOTOR
MBR	MEMBRANE BIOREACTOR
MCC	MOTOR CONTROL CENTER
MD	MEMBRANE DEGASIFIER
MF	MICROFILTRATION
ML	MUFFLER, SILENCER
MMF	MULTIMEDIA FILTER
MX	MIXER
NF	NANOFILTRATION
N.O.	NORMALLY OPEN
OC	OXYGEN CONCENTRATOR
ORP	OXYGEN-REDUCTION POTENTIAL
OZ	OZONATOR
OZG	OZONE GENERATOR
P	PUMP
PD	PULSATION DAMPENER
PLC	PROGRAMMABLE LOGIC CONTROLLER
PSE	RUPTURE DISC
PUV	MULTIFUNCTION VALVE
PX	PRESSURE EXCHANGER
RO	REVERSE OSMOSIS
RP	ROTARY PRESS
RT	RESIN TRAP
SC	SCRUBBER
SCP	SCRAPER
SCR	SCREEN
SFT	SOFTENER
SKM	SKIMMER
SM	STATIC MIXER, INLINE MIXER
ST	STEAM TRAP
STK	MEMBRANE STACK (ED, EDR, EDI, E-CELL)
STR	STRAINER
SV	SAMPLE VALVE
TK	TANK
TOC	TOTAL ORGANIC CARBON
TRB	TURBINE
UF	ULTRAFILTRATION
UPS	UNINTERRUPTIBLE POWER SUPPLY
UV	ULTRAVIOLET IRRADIATOR
VB	VACUUM BREAKER
VD	VACUUM DEGASIFIER
VFD	VARIABLE FREQUENCY DRIVE

REV	DESCRIPTION	ECO	DWN	APPR	APPR	DATE
D	REVISED AS NOTED	-	SBN	MR	KK	25 NOV 24
C	REVISED AS NOTED	-	AS	MR	KK	23 JAN 24
B	REVISED AS NOTED	-	PT	MR	KK	23 MAR 23
A	INITIAL RELEASE	-	PT	MR	KK	17 FEB 23

PROPRIETARY AND CONFIDENTIAL: THIS DRAWING AND ALL INFORMATION AND KNOWLEDGE CONTAINED OR REFERRED HEREIN ARE THE CONFIDENTIAL AND PROPRIETARY PROPERTY OF VEOLIA AND AS SUCH ARE INSTRUMENTS OF SERVICE FOR USE SOLELY WITH RESPECT TO THIS PROJECT. THESE INSTRUMENTS OF SERVICE SHALL NOT BE REPRODUCED, TRANSMITTED, DISCLOSED OR USED OTHERWISE IN WHOLE OR IN PART, WITHOUT PRIOR WRITTEN AGREEMENT BY VEOLIA AND MUST BE IMMEDIATELY RETURNED OR DESTROYED UPON REQUEST.

TOLERANCES UNLESS NOTED
DECIMALS .X .XX .XXX
ANGLES
FRAC

VEOLIA

CUSTOMER INFORMATION
CAESARS LANE WTF
MBR SYSTEM

P&ID
LEGENDS & SYMBOLS

DRAWING NUMBER	REVISION
510464-WTS-PR-SYS-EN21-DS-100	D

REF.: -
DOC. OWNER: -

PROJECT NO.	PART/MATERIAL NO.	SCALE	SIZE	SHEET
510464		NONE	D	3 OF 3

LAST SAVED: Monday, November 25, 2024 5:05:20 PM

FILE LOCATION: C:_ADSKVault\NAM\510464 - Caesars Lane WWIP\1. PFD and P&ID\510464-WTSJPR-SYS-EN21-DS-100.dwg

INDIVIDUAL AIR INLET PIPE THROUGH A SEPARATE SILENCER AND BIRD SCREEN

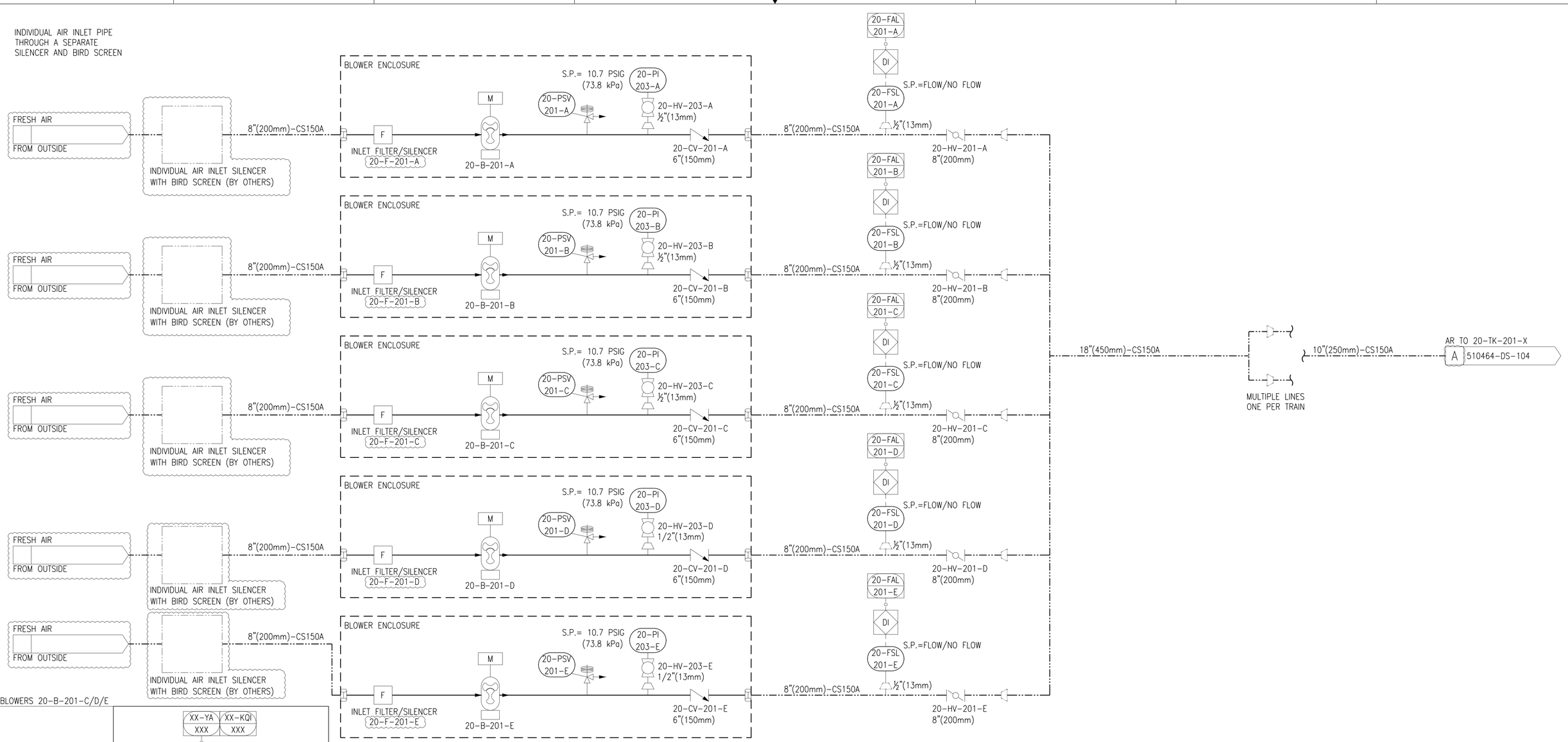

FOR BLOWERS 20-B-201-C/D/E

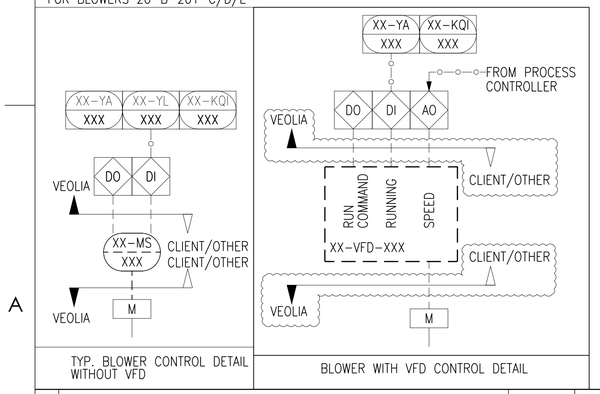

TYP. BLOWER CONTROL DETAIL WITHOUT VFD

BLOWER WITH VFD CONTROL DETAIL

MEMBRANE BLOWER DATA	
NO OF DUTY BLOWERS	4
NO OF STANDBY BLOWER	1
TOTAL NO OF BLOWERS	5
TAG NUMBERS	20-B-201-A/B/C/D/E
LEAP HI FLOW PER TRAIN (DESIGN)	1481 ICFM @ 5.5 PSIG
LEAP LO FLOW PER TRAIN (DESIGN)	741 ICFM @ 5.5 PSIG
LEAP HI FLOW PER TRAIN (BUILD-OUT)	1611 ICFM @ 5.5 PSIG
LEAP LO FLOW PER TRAIN (BUILD-OUT)	806 ICFM @ 5.5 PSIG
TYPE OF BLOWER	POSITIVE DISPLACEMENT
BLOWER ENCLOSURE INCLUDED	YES, NO SPACE HEATER
SPEED CONTROL	YES FOR 20-B-201 A/B NO FOR 20-B-201 C/D/E
ELECTYRIC MOTOR	TEFC, 60 HP AT 1800 RPM
VOLTAGE	480V/3PH/60HZ

NOTES:

1. ALL DOTTED-LINE EQUIPMENT TO BE SUPPLIED BY OTHERS. VERIFICATION OF ANY POSTED VALUES IS THE RESPONSIBILITY OF THE SYSTEM INTEGRATOR.
2. THE ACTUAL BLOWER DISCHARGE PRESSURE IS DETERMINED BASED ON MAXIMUM POSSIBLE LIQUID LEVEL IN TANKS BEING AERATED.
3. SYSTEM INTEGRATOR IS RESPONSIBLE FOR HOT AIR PIPE THERMO-INSULATION AS APPLICABLE.
4. BLOWER DISCHARGE FLEXIBLE SLEEVE.
5. ALL EQUIPMENT ON THIS SHEET IS DESIGNED TO BE INSTALLED IN A NON-CLASSIFIED AREA (PER NFPA 820).
6. EQUIPMENT IS PROVIDED BY VEOLIA (UNLESS OTHERWISE NOTED). INTERCONNECTING PIPING/WIRING AND INSTALLATION BY OTHERS.
7. A PORTION OF THE AIR LINE NEEDS TO BE ROUTED A MINIMUM OF 2 FT HIGHER THAN THE MAXIMUM TANK LEVEL TO PREVENT WATER BACKFLOW.

VEOLIA WTS CONTROLLED DOCUMENT

REV	DESCRIPTION	ECO	DWN	APPR	APPR	DATE
D	REVISED AS NOTED	-	SBN	MR	KK	25 NOV 24
C	REVISED AS NOTED	-	AS	MR	KK	23 JAN 24
B	REVISED AS NOTED	-	PT	MR	KK	23 MAR 23
A	INITIAL RELEASE	-	TP	MR	KK	17 FEB 23

TOLERANCES UNLESS NOTED
DECIMALS .X .XX .XXX
ANGLES
FRAC

PROPRIETARY AND CONFIDENTIAL: THIS DRAWING AND ALL INFORMATION AND KNOWLEDGE CONTAINED OR REFERRED HEREIN ARE THE CONFIDENTIAL AND PROPRIETARY PROPERTY OF VEOLIA AND AS SUCH ARE INSTRUMENTS OF SERVICE FOR USE SOLELY WITH RESPECT TO THIS PROJECT. THESE INSTRUMENTS OF SERVICE SHALL NOT BE REPRODUCED, TRANSMITTED, DISCLOSED OR USED OTHERWISE IN WHOLE OR IN PART, WITHOUT PRIOR WRITTEN AGREEMENT BY VEOLIA AND MUST BE IMMEDIATELY RETURNED OR DESTROYED UPON REQUEST.

VEOLIA

CUSTOMER INFORMATION: CAESARS LANE WTF MBR SYSTEM

P&ID: BLOWER - MEMBRANE BLOWER

DRAWING NUMBER: 510464-WTS-PR-SYS-EN21-DS-102
REVISION: D
REF.: -
DOC. OWNER: -
PROJECT NO.: 510464
PART/MATERIAL NO.:
SCALE: NONE
SIZE: D
SHEET: 1 OF 2

FILE LOCATION: C:_ADSKVault\NAM\510464 - Caesars Lane WWTP\1_PFD and P&ID\510464-WTS[PR-SYS-EN21-DS-102.dwg
LAST SAVED: Monday, November 25, 2024 5:05:26 PM

FRESH AIR
FROM OUTSIDE

COMMON INLET SILENCER
WITH BIRD SCREEN
(BY OTHERS)

16"(400mm)-CS150A

DETAIL 'A'
L.S

10"(250mm)-CS150A
16-HV-400-A

BLOWER ENCLOSURE
S.P.= 15 PSIG
(103.4 kPa)
16-PI
403-A
M
16-PSV
401-A
16-HV-403-A
½"(13mm)
F
INLET FILTER/SILENCER
16-F-401-A
16-B-401-A
16-CV-401-A
3"(75mm)

10"(250mm)-CS150A
16-FAL
401-A
DI
S.P.=FLOW/NO FLOW
16-FSL
401-A
½"(13mm)
16-HV-401-A
10"(250mm)

DETAIL 'A'
L.S

10"(250mm)-CS150A
16-HV-400-B

BLOWER ENCLOSURE
S.P.= 15 PSIG
(103.4 kPa)
16-PI
403-B
M
16-PSV
401-B
16-HV-403-B
½"(13mm)
F
INLET FILTER/SILENCER
16-F-401-B
16-B-401-B
16-CV-401-B
3"(75mm)

10"(250mm)-CS150A
16-FAL
401-B
DI
S.P.=FLOW/NO FLOW
16-FSL
401-B
½"(13mm)
16-HV-401-B
10"(250mm)

16"(400mm)-CS150A
AIR TO 16-TK-1/2/3
B
510464-DS-103

DETAIL 'A'
L.S

10"(250mm)-CS150A
16-HV-400-C

BLOWER ENCLOSURE
S.P.= 15 PSIG
(103.4 kPa)
16-PI
403-B
M
16-PSV
401-C
16-HV-403-C
½"(13mm)
F
INLET FILTER/SILENCER
16-F-401-C
16-B-401-C
16-CV-401-C
3"(75mm)

10"(250mm)-CS150A
16-FAL
401-C
DI
S.P.=FLOW/NO FLOW
16-FSL
401-C
½"(13mm)
16-HV-401-C
10"(250mm)

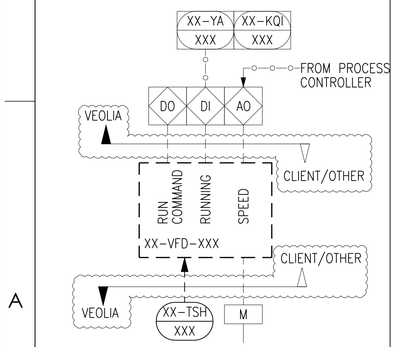

BLOWER WITH VFD CONTROL DETAIL

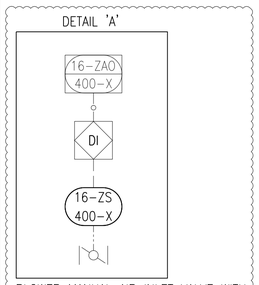

BLOWER MANUAL AIR INLET VALVE WITH LIMIT SWITCH ON THE OPEN POSITION

PROCESS BLOWER INFO	
NO OF DUTY BLOWERS	2
NO OF STANDBY BLOWER	1
TOTAL NO OF BLOWERS	3
TAG NUMBERS	16-B-401-A/B/C
BLOWER RATED CAPACITY	2038 SCFM AT 9.74 PSIG
TYPE OF BLOWER	POSITIVE DISPLACEMENT
BLOWER ENCLOSURE INCLUDED	YES, NO SPACE HEATER
SPEED CONTROL	VFD
ELECTYRIC MOTOR	TEFC, 150 HP AT 1800 RPM
VOLTAGE	480V/3PH/60HZ

NOTES:

1. ALL DOTTED-LINE EQUIPMENT TO BE SUPPLIED BY OTHERS. VERIFICATION OF ANY POSTED VALUES IS THE RESPONSIBILITY OF THE SYSTEM INTEGRATOR.
2. THE ACTUAL BLOWER DISCHARGE PRESSURE IS DETERMINED BASED ON MAXIMUM POSSIBLE LIQUID LEVEL IN TANKS BEING AERATED.
3. SYSTEM INTEGRATOR IS RESPONSIBLE FOR HOT AIR PIPE THERMO-INSULATION AS APPLICABLE.
4. BLOWER DISCHARGE FLEXIBLE SLEEVE.
5. ALL EQUIPMENT ON THIS SHEET IS DESIGNED TO BE INSTALLED IN A NON-CLASSIFIED AREA (PER NFPA 820).
6. EQUIPMENT IS PROVIDED BY VEOLIA (UNLESS OTHERWISE NOTED). INTERCONNECTING PIPNG/WIRING AND INSTALLATION BY OTHERS.
7. A PORTION OF THE AIR LINE NEEDS TO BE ROUTED A MINIMUM OF 2 FT HIGHER THAN THE MAXIMUM TANK LEVEL TO PREVENT WATER BACKFLOW.

REV	DESCRIPTION	ECO	DWN	APPR	APPR	DATE
D	REVISED AS NOTED	-	SBN	MR	KK	25 NOV 24
C	REVISED AS NOTED	-	AS	MR	KK	23 JAN 24
B	REVISED AS NOTED	-	PT	MR	KK	23 MAR 24
A	INITIAL RELEASE		TP	MR	KK	17 FEB 23

TOLERANCES UNLESS NOTED
DECIMALS .X .XX .XXX
ANGLES
FRAC

PROPRIETARY AND CONFIDENTIAL: THIS DRAWING AND ALL INFORMATION AND KNOWLEDGE CONTAINED OR REFERRED HEREIN ARE THE CONFIDENTIAL AND PROPRIETARY PROPERTY OF VEOLIA AND AS SUCH ARE INSTRUMENTS OF SERVICE FOR USE SOLELY WITH RESPECT TO THIS PROJECT. THESE INSTRUMENTS OF SERVICE SHALL NOT BE REPRODUCED, TRANSMITTED, DISCLOSED OR USED OTHERWISE IN WHOLE OR IN PART, WITHOUT PRIOR WRITTEN AGREEMENT BY VEOLIA AND MUST BE IMMEDIATELY RETURNED OR DESTROYED UPON REQUEST.

VEOLIA

CUSTOMER INFORMATION
CAESARS LANE WTF
MBR SYSTEM

P&ID,
BLOWER - PROCESS BLOWER

DRAWING NUMBER	REVISION
510464-WTS-PR-SYS-EN21-DS-102	D
REF.: -	DOC. OWNER:
PROJECT NO. 510464	PART/MATERIAL NO.
SCALE NONE	SIZE D
SHEET 2 OF 2	

LAST SAVED: Monday, November 25, 2024 5:05:26 PM

FILE LOCATION: C:_ADSKVault\NAM\S10464 - Caesars Lane WWTP\1. PFD and P&ID\S10464-WTS-PR-SYS-EN21-DS-102.dwg

AIR FROM 16-B-401
B 510464-DS-102 SHT 2
16"(400mm)-CS150A
(SEE NOTE 4)
16"X10"
10"(250mm)-CS150A
10"(250mm)-CS150A
RAS FROM 20-P-501
E 510464-DS-110
36"(900mm)-DI150A
NaOH DOSING
F 510464-DS-111 SHT 1
1/2"(15mm)-PV080A
2mm FINE SCREENED WASTE WATER FROM WET PIT
BY OTHERS
BIOREACTOR SPLITTER BOX
CHANNEL
CHANNEL
FEED FLOW
PLANT INLET FEED FLOW
RANGE : 694 GPM-11,458 GPM
16"X10"
16"X10"
H L
16-AA 405-X
16-AIC 405-X
AI
16-AIT 405-X
DO METER RANGE: 0 TO 10 mg/L
16-AE 405-X
8"(200mm) 16-HV-405-X
8"(200mm)-SS150A
DOWNWARD OPENING SLIDING GATE (BY OTHERS)
ANOXIC MIXER
M
16-MX-211-X
FINE BUBBLE DIFFUSER GRID
ANOXIC ZONE
AEROBIC ZONE 1
16-AIC 402-X
16-AA 402-X
H L
AI
16-AE 402-X
pH SENSOR RANGE: 0-14 pH
6"(150mm) 16-HV-406-X
6"(150mm)-SS150A
H L
16-AA 403-X
16-AIC 403-X
AI
16-AIT 403-X
DO METER RANGE: 0-10 mg/L
16-AE 403-X
FINE BUBBLE DIFFUSER GRID
AEROBIC ZONE 2
16-LAHH 401-X
DI
16-LSHH 401-X
(SEE NOTE 6)
M
16-HV-416-X
DOWNWARD OPENING SLIDING GATE (BY OTHERS)
16-HV-408-X
6"(150mm)
(MUD VALVE BY OTHERS)
6"(150mm)-PV080
MIXED LIQUOR TO MEMBRANE TANK DISTRIBUTION CHANNEL
G 510464-DS-104
6"(150mm)-PV080
TO DRAIN
BY OTHERS
MIXED LIQUOR TO MEMBRANE TANK DISTRIBUTION CHANNEL
H 510464-DS-104
MIXED LIQUOR TO MEMBRANE TANK DISTRIBUTION CHANNEL
I 510464-DS-104
BOUNDARY LINE: BIOLOGICAL REACTOR NO. 1
BIOLOGICAL REACTOR NO. 2
ALL EQUIPMENT IS THE SAME AS FOR NO. 1
BOUNDARY LINE: BIOLOGICAL REACTOR NO. 2
BIOLOGICAL REACTOR NO. 3
ALL EQUIPMENT IS THE SAME AS FOR NO. 1
BOUNDARY LINE: BIOLOGICAL REACTOR NO. 3

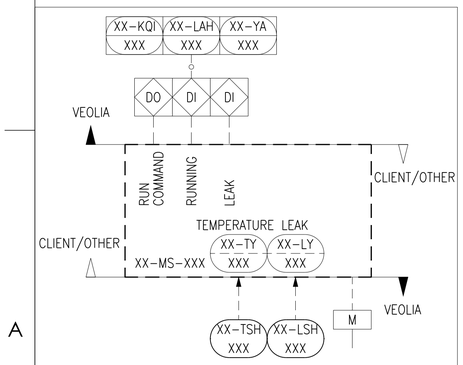

TYP. SUBMERSIBLE MIXER CONTROL DETAIL

EQUIPMENT	
ANOXIC ZONE PER TRAIN	
MIXER	MECHANICAL, SUBMERSIBLE
NUMBER OF DUTY MIXERS	1
MIXER TAG	16-MX-211-(1/2/3)
MIXER MOTOR	TEFC, 10.7 HP AT 571 RPM
VOLTAGE	480 V/3 ph/ 60 Hz
AEROBIC ZONE 1, PER TRAIN	
DIFFUSERS	FINE-BUBBLE
TYPE OF DIFFUSERS	DISC DIFFUSER
# OF GRIDS	1 (FULL FLOOR COVERAGE)
# OF DIFFUSERS PER GRID	(440)
AEROBIC ZONE 2, PER TRAIN	
DIFFUSERS	FINE-BUBBLE
TYPE OF DIFFUSERS	DISC DIFFUSER
# OF GRIDS	1 (FULL FLOOR COVERAGE)
# OF DIFFUSERS PER GRID	(312)

BIOREACTOR TANK DATA	
NO OF TRAINS	3
TANK MATERIAL	CONCRETE
TAG NUMBER	
ANOXIC ZONE	16-TK-201-(1/2/3)
AEROBIC ZONE	16-TK-401-(1/2/3)
OPERATING VOLUME, GALLONS	
ANOXIC ZONE, TOTAL	209,244
AEROBIC ZONE 1, TOTAL	506,145
AEROBIC ZONE 2, TOTAL	506,145
TANK INTERNAL DIMENSIONS, FT	
ANOXIC ZONE, (FEET)	
LENGTH	(18.0)
WIDTH	24
SIDE WATER DEPTH	(19.87 TO 20.27)
AEROBIC ZONE 1, (FEET)	
LENGTH	44.75
WIDTH	24
SIDE WATER DEPTH	(19.87 TO 20.27)
AEROBIC ZONE 2, (FEET)	
LENGTH	44.75
WIDTH	24
SIDE WATER DEPTH	(19.87 TO 20.27)

NOTES:
1. ALL DOTTED-LINE EQUIPMENT TO BE SUPPLIED BY OTHERS. VERIFICATION OF ANY POSTED VALUES IS THE RESPONSIBILITY OF THE SYSTEM INTEGRATOR.
2. SCOPE BY OTHERS: ALL CONCRETE WORKS, CHANNELS, SLUICE GATES, EMERGENCY OVERFLOW, TANK COVERS, HANDRAILS, ANY DRAINS, ETC.
3. DRAWING TYPICAL FOR EVERY BIOLOGICAL TRAINS, WITH EXCEPTION OF COMMON CHANNELS.
4. A PORTION OF THE AIR LINE NEEDS TO BE ROUTED A MINIMUM OF 2 FT (60 CM) ABOVE MAXIMUM LIQUID LEVEL IN TANK BEING AERATED TO PREVENT WATER BACK FLOW.
5. 16-LSHH-401 IS PLACED 1 FT (30 CM) BELOW THE TOP OF TANK.
6. ALL EQUIPMENT ON THIS SHEET INSIDE THE BIOLOGICAL TANKS TO 18 INCH ABOVE THE TOP OF THE TANKS ARE CLASS 1 DIVISION 2 RATED (PER NFPA 820).
7. FOR CLARITY, DRAIN LINES FOR BIOLOGICAL TANKS ARE NOT SHOWN.

VEOLIA WTS CONTROLLED DOCUMENT

REV	DESCRIPTION	ECO	DWN	APPR	APPR	DATE
D	REVISED AS NOTED	-	SBN	MR	KK	25 NOV 24
C	REVISED AS NOTED	-	AS	MR	KK	23 JAN 24
B	REVISED AS NOTED	-	PT	MR	KK	23 MAR 23
A	INITIAL RELEASE	-	TP	MR	KK	17 FEB 23

PROPRIETARY AND CONFIDENTIAL: THIS DRAWING AND ALL INFORMATION AND KNOWLEDGE CONTAINED OR REFERRED HEREIN ARE THE CONFIDENTIAL AND PROPRIETARY PROPERTY OF VEOLIA AND AS SUCH ARE INSTRUMENTS OF SERVICE FOR USE SOLELY WITH RESPECT TO THIS PROJECT. THESE INSTRUMENTS OF SERVICE SHALL NOT BE REPRODUCED, TRANSMITTED, DISCLOSED OR USED OTHERWISE IN WHOLE OR IN PART, WITHOUT PRIOR WRITTEN AGREEMENT BY VEOLIA AND MUST BE IMMEDIATELY RETURNED OR DESTROYED UPON REQUEST.

TOLERANCES UNLESS NOTED
DECIMALS .X .XX .XXX
ANGLES
FRAC

VEOLIA

CUSTOMER INFORMATION
CAESARS LANE WTF
MBR SYSTEM

P&ID
BIOREACTOR

DRAWING NUMBER: 510464-WTS-PR-SYS-EN21-DS-103
REVISION: D
REF.: -
DOC. OWNER:
PROJECT NO.: 510464
PART/MATERIAL NO.:
SCALE: NONE
SIZE: D
SHEET: 1 OF 1

LAST SAVED: Thursday, November 28, 2024 7:59:27 PM
FILE LOCATION: C:_ADX\Vault Main\510464 - Caesars Lane WWTP\1. PFD and P&ID\510464-WTS-PR-SYS-EN21-DS-103.dwg

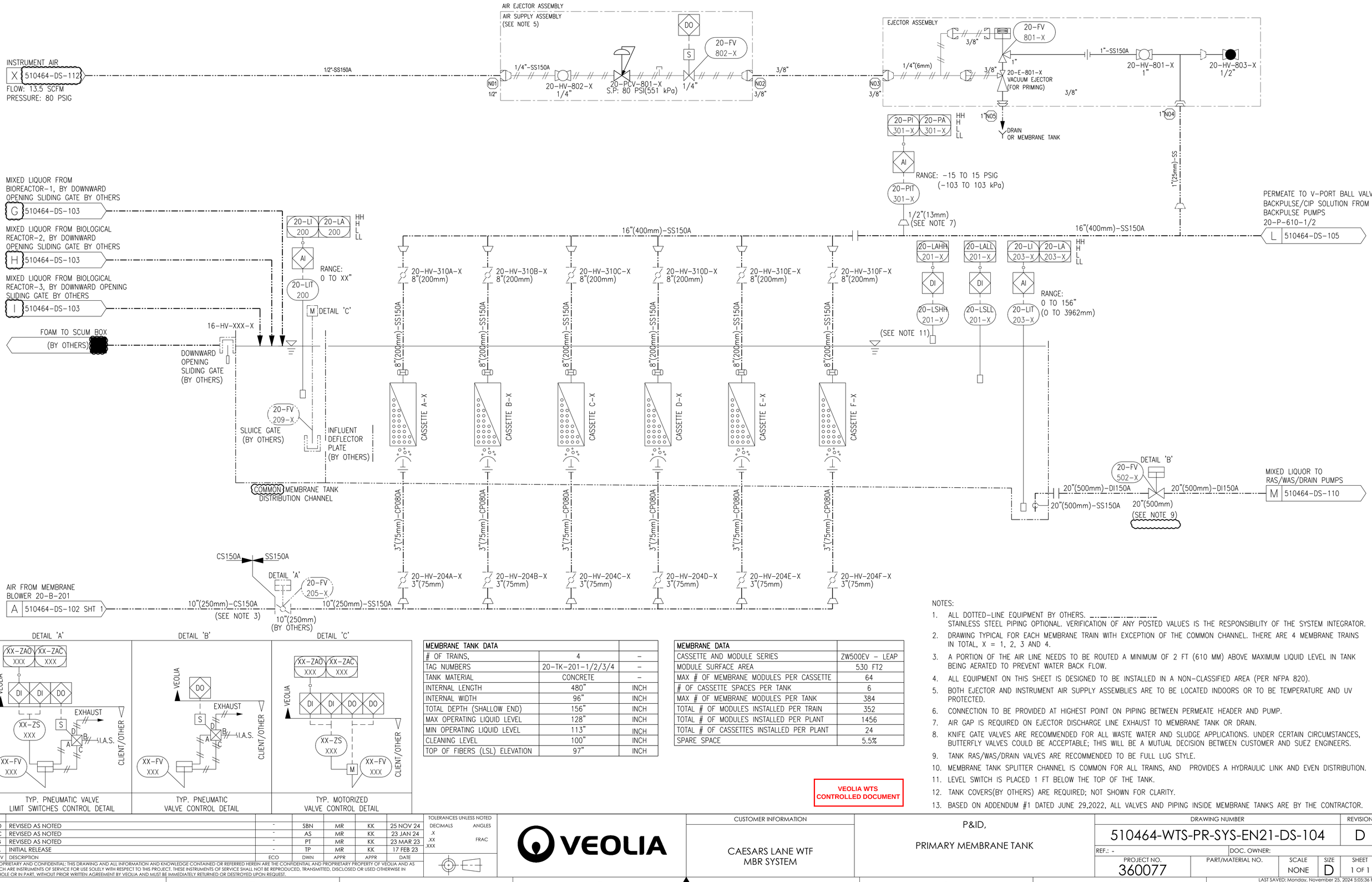

DETAIL 'A'

TYP. PNEUMATIC VALVE LIMIT SWITCHES CONTROL DETAIL

DETAIL 'B'

TYP. PNEUMATIC VALVE CONTROL DETAIL

DETAIL 'C'

TYP. MOTORIZED VALVE CONTROL DETAIL

MEMBRANE TANK DATA		
# OF TRAINS,	4	–
TAG NUMBERS	20-TK-201-1/2/3/4	–
TANK MATERIAL	CONCRETE	–
INTERNAL LENGTH	480"	INCH
INTERNAL WIDTH	96"	INCH
TOTAL DEPTH (SHALLOW END)	156"	INCH
MAX OPERATING LIQUID LEVEL	128"	INCH
MIN OPERATING LIQUID LEVEL	113"	INCH
CLEANING LEVEL	100"	INCH
TOP OF FIBERS (LSL) ELEVATION	97"	INCH

MEMBRANE DATA	
CASSETTE AND MODULE SERIES	ZW500EV – LEAP
MODULE SURFACE AREA	530 FT2
MAX # OF MEMBRANE MODULES PER CASSETTE	64
# OF CASSETTE SPACES PER TANK	6
MAX # OF MEMBRANE MODULES PER TANK	384
TOTAL # OF MODULES INSTALLED PER TRAIN	352
TOTAL # OF MODULES INSTALLED PER PLANT	1456
TOTAL # OF CASSETTES INSTALLED PER PLANT	24
SPARE SPACE	5.5%

VEOLIA WTS
CONTROLLED DOCUMENT

NOTES:

1. ALL DOTTED-LINE EQUIPMENT BY OTHERS. STAINLESS STEEL PIPING OPTIONAL. VERIFICATION OF ANY POSTED VALUES IS THE RESPONSIBILITY OF THE SYSTEM INTEGRATOR.
2. DRAWING TYPICAL FOR EACH MEMBRANE TRAIN WITH EXCEPTION OF THE COMMON CHANNEL. THERE ARE 4 MEMBRANE TRAINS IN TOTAL, X = 1, 2, 3 AND 4.
3. A PORTION OF THE AIR LINE NEEDS TO BE ROUTED A MINIMUM OF 2 FT (610 MM) ABOVE MAXIMUM LIQUID LEVEL IN TANK BEING AERATED TO PREVENT WATER BACK FLOW.
4. ALL EQUIPMENT ON THIS SHEET IS DESIGNED TO BE INSTALLED IN A NON-CLASSIFIED AREA (PER NFPA 820).
5. BOTH EJECTOR AND INSTRUMENT AIR SUPPLY ASSEMBLIES ARE TO BE LOCATED INDOORS OR TO BE TEMPERATURE AND UV PROTECTED.
6. CONNECTION TO BE PROVIDED AT HIGHEST POINT ON PIPING BETWEEN PERMEATE HEADER AND PUMP.
7. AIR GAP IS REQUIRED ON EJECTOR DISCHARGE LINE EXHAUST TO MEMBRANE TANK OR DRAIN.
8. KNIFE GATE VALVES ARE RECOMMENDED FOR ALL WASTE WATER AND SLUDGE APPLICATIONS. UNDER CERTAIN CIRCUMSTANCES, BUTTERFLY VALVES COULD BE ACCEPTABLE; THIS WILL BE A MUTUAL DECISION BETWEEN CUSTOMER AND SUEZ ENGINEERS.
9. TANK RAS/WAS/DRAIN VALVES ARE RECOMMENDED TO BE FULL LUG STYLE.
10. MEMBRANE TANK SPLITTER CHANNEL IS COMMON FOR ALL TRAINS, AND PROVIDES A HYDRAULIC LINK AND EVEN DISTRIBUTION.
11. LEVEL SWITCH IS PLACED 1 FT BELOW THE TOP OF THE TANK.
12. TANK COVERS(BY OTHERS) ARE REQUIRED; NOT SHOWN FOR CLARITY.
13. BASED ON ADDENDUM #1 DATED JUNE 29,2022, ALL VALVES AND PIPING INSIDE MEMBRANE TANKS ARE BY THE CONTRACTOR.

REV	DESCRIPTION	ECO	DWN	APPR	APPR	DATE
D	REVISED AS NOTED	-	SBN	MR	KK	25 NOV 24
C	REVISED AS NOTED	-	AS	MR	KK	23 JAN 24
B	REVISED AS NOTED	-	PT	MR	KK	23 MAR 23
A	INITIAL RELEASE	-	TP	MR	KK	17 FEB 23

PROPRIETARY AND CONFIDENTIAL: THIS DRAWING AND ALL INFORMATION AND KNOWLEDGE CONTAINED OR REFERRED HEREIN ARE THE CONFIDENTIAL AND PROPRIETARY PROPERTY OF VEOLIA AND AS SUCH ARE INSTRUMENTS OF SERVICE FOR USE SOLELY WITH RESPECT TO THIS PROJECT. THESE INSTRUMENTS OF SERVICE SHALL NOT BE REPRODUCED, TRANSMITTED, DISCLOSED OR USED OTHERWISE IN WHOLE OR IN PART, WITHOUT PRIOR WRITTEN AGREEMENT BY VEOLIA AND MUST BE IMMEDIATELY RETURNED OR DESTROYED UPON REQUEST.

TOLERANCES UNLESS NOTED
DECIMALS .X .XX .XXX
ANGLES
FRAC

VEOLIA

CUSTOMER INFORMATION
CAESARS LANE WTF
MBR SYSTEM

P&ID,
PRIMARY MEMBRANE TANK

DRAWING NUMBER	REVISION
510464-WTS-PR-SYS-EN21-DS-104	D

REF.: -
DOC. OWNER:

PROJECT NO.	PART/MATERIAL NO.	SCALE	SIZE	SHEET
360077		NONE	D	1 OF 1

LAST SAVED: Monday, November 25, 2024 5:05:36 PM

FILE LOCATION: C:_ADSKVault\WAM\510464 - Caesars Lane WWIP\1- PFD and P&ID\510464-WTSPR-SYS-EN21-DS-104.dwg

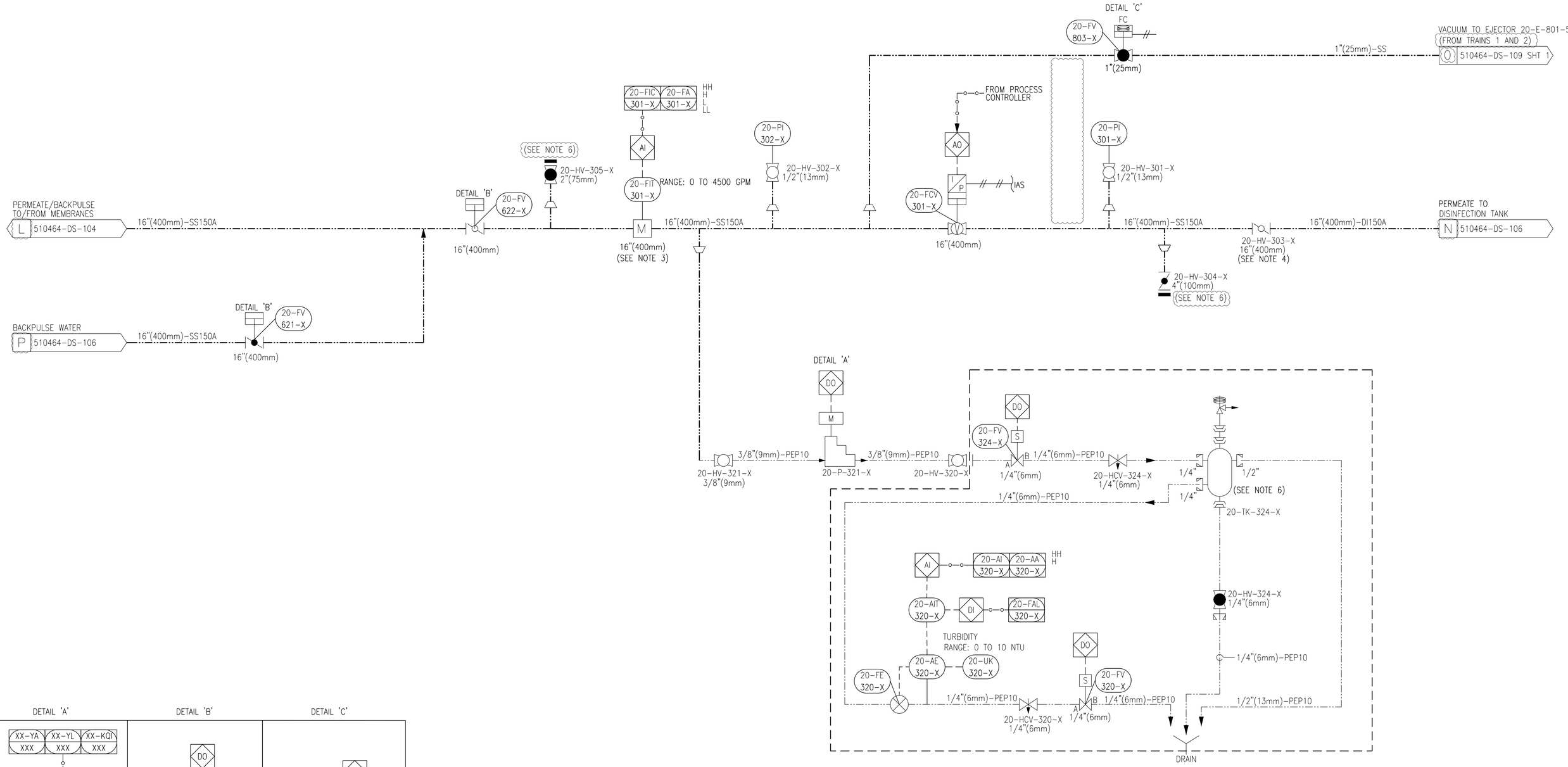

DETAIL 'A'

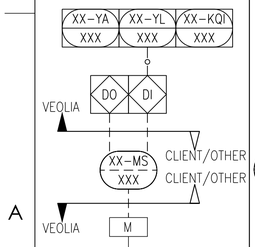

TYP. SAMPLE PUMP CONTROL DETAIL

DETAIL 'B'

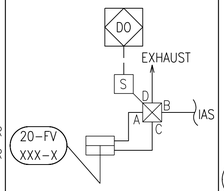

TYP. PNEUMATIC ACTUATED VALVE CONTROL DETAIL

DETAIL 'C'

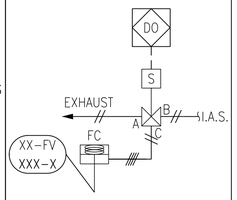

TYP. PNEUMATIC ACTUATED VALVE CONTROL DETAIL

SAMPLE PUMP DATA	
NO OF DUTY PUMPS	4
TAG NUMBERS (INSTALLED)	20-P-321-(1/2/3/4)
TYPE OF PUMP	METERING
PUMP CAPACITY	0.1 GPM
ELECTRIC MOTOR	TEFC, 0.2 HP AT 1,775 RPM
VOLTAGE	120V/1PH/60HZ

FLOW CONTROL V-PORT BALL VALVE- 20-FCV-301-(1/2/3/4)	
FLOW RANGE (GPM)	736 - 3438
VALVE PRESSURE DROP RANGE (PSI)	0.22 TO 10.1

NOTES:

1. ALL DOTTED LINES/EQUIPMENT BY OTHERS
2. DRAWING TYPICAL FOR EACH TRAIN. THERE ARE 4 TRAINS IN TOTAL, X=1,2,3 AND 4
3. 5 PIPE DIAMETERS UPSTREAM, 3 PIPE DIAMETERS DOWNSTREAM, STRAIGHT PIPE RUN RECOMMENDED FOR MAXIMUM ACCURACY.
4. VALVE 20-HV-303-X TO BE CLOSED DURING GLYCERINE REMOVAL.
5. DEGASSING COLUMN FOR STABLE TURBIDITY ANALYSIS, 3 INCH IN DIAMETER X 30.5' LENGTH.
6. BLIND FLANGES OR CAP TO BE INSTALLED TO PREVENT AIR ENTERING THE PIPE IN CASE OF A LEAKY VALVE.

VEOLIA WTS CONTROLLED DOCUMENT

REV	DESCRIPTION	ECO	DWN	APPR	APPR	DATE
D	REVISED AS NOTED	-	SBN	MR	KK	25 NOV 24
C	REVISED AS NOTED	-	AS	MR	KK	23 JAN 24
B	REVISED AS NOTED	-	PT	MR	KK	23 MAR 23
A	INITIAL RELEASE	-	TP	MR	KK	17 FEB 23

TOLERANCES UNLESS NOTED
DECIMALS .X .XX .XXX
ANGLES
FRAC

PROPRIETARY AND CONFIDENTIAL: THIS DRAWING AND ALL INFORMATION AND KNOWLEDGE CONTAINED OR REFERRED HEREIN ARE THE CONFIDENTIAL AND PROPRIETARY PROPERTY OF VEOLIA AND AS SUCH ARE INSTRUMENTS OF SERVICE FOR USE SOLELY WITH RESPECT TO THIS PROJECT. THESE INSTRUMENTS OF SERVICE SHALL NOT BE REPRODUCED, TRANSMITTED, DISCLOSED OR USED OTHERWISE IN WHOLE OR IN PART, WITHOUT PRIOR WRITTEN AGREEMENT BY VEOLIA AND MUST BE IMMEDIATELY RETURNED OR DESTROYED UPON REQUEST.

VEOLIA

CUSTOMER INFORMATION
CAESARS LANE WTF
MBR SYSTEM

P&ID,
PERMEATE SIPHON & ASSOC EQUIPMENT

DRAWING NUMBER	REVISION
510464-WTS-PR-SYS-EN21-DS-105	D

REF.: -
DOC. OWNER:

PROJECT NO.	PART/MATERIAL NO.	SCALE	SIZE	SHEET
510464		NONE	D	1 OF 1

FILE LOCATION: C:_ADSKVault\NAM\510464 - Caesars Lane WWTP\1. PFD and P&ID\510464-WTS-PR-SYS-EN21-DS-105.dwg
LAST SAVED: Thursday, November 28, 2024 7:59:43 PM

VACUUM TO EJECTOR 20-E-801-7
(FROM COMMON PERMEATE HEADER)
Q 510464-DS-109 SHT 2

1"(25mm)-SS

CITRIC ACID SOLUTION
FROM 23-P-301-1/2
R 510464-DS-111, SHT 2
1/2"(12mm)-PVC080

23-FV 330 DETAIL 'B'
23-HV-330 1/2"(12mm)
23-CV-330 1/2"(12mm)
1/2"(12mm)

SODIUM HYPOCHLORITE SOLUTION
FROM 23-P-101-1/2
S 510464-DS-111, SHT 2
1"(25mm)-CPVC080

23-FV 130 DETAIL 'B'
23-HV-130 1"(25mm)
23-CV-130 1"(25mm)
1"(25mm)

20-FI 602 / 20-FA 602 (HH H L LL)
AI
RANGE: 0-4500 GPM
20-FIT 602

20-PAH 601
DI
S.P.= 30PSIG INCREASING
20-PSH 601

20-PAH 602
DI
S.P.= 30 PSIG INCREASING
20-PSH 602

20-PAH 600
DI
20-DPS 600

20-TI 301
AI
RANGE: 0-50°C (38-90°F)
20-TIT 301
20-TW 301
3/4"

20-PI 602
20-HV-602 1/2"(13mm)

PERMEATE FROM PERMEATE SIPHON SYSTEMS
N 510464-DS-105
16"(400mm)-DI150A

(SEE NOTE 1)

16"(400mm)-DIMJ
M
14"(350mm)
DIMJ DI

1/4" 14"(350mm)-DI 1/4" 16" 16" 2"(50mm)
16"(400mm)-SS150A
DI SS
20-HV-600 2"(50mm) DRAIN
20-SCN-600 BASKET STRAINER (2mm OPENING)

16"(400mm)-SS150A
BACKPULSE WATER TO TRAIN' S PERMEATE HEADERS
P 510464-DS-105

20-HV-610-1 16"(400mm)
20-HV-610-2 16"(400mm)
20-LI 601 / 20-LA 601 (HH H L LL)
AI
RANGE: TBD
20-LIT 601
16"(400mm)
20-CV-602-1 16"(400mm)
20-CV-602-2 16"(400mm)
16"(400mm)
30"(750MM)-DI150A

TEMPORARY POTABLE WATER SOURCE
(BY OTHERS) (BY OTHERS)

TO CHLORINATION/
DECHLORINATION TANK

20-P-610-A/B
BACKPULSE PUMPS
20-TK-600
BACKPULSE TANK (BY OTHERS)
PORTION OF CHLORINATION/DECHLORINATION TANK

DETAIL 'A'

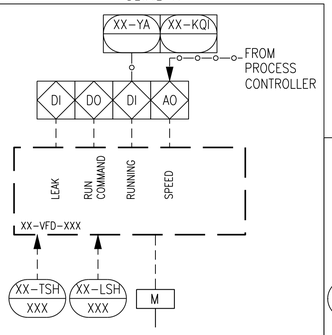

TYP. BACKPULSE PUMPS CONTROL DETAIL

DETAIL 'B'

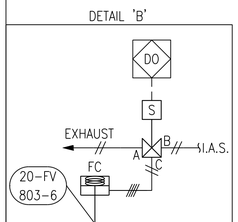

TYP. PNEUMATIC ACTUATED VALVE CONTROL DETAIL

BACKPULSE PUMP DATA	
NO OF DUTY PUMP	1
NO OF STANDBY PUMP	1
TAG NUMBERS	20-P-610-A/B
TYPE OF PUMP	SUBMERSIBLE PUMP
INSTALLATION	VERTICAL
SPEED CONTROL	VFD
ELECTRIC MOTOR	60 HP/460V/3 PH/1,180 RPM
PUMP CAPACITY - DESIGN	3,510 GPM @ 44' FT TDH
PUMP CAPACITY - BUILDOUT	3,703 GPM @ 44' TDH
RECOVERY CLEAN FLOW	1,608 GPM @ 44' TDH
MAINTENANCE CLEAN FLOW	1,608 GPM @ 44' TDH

NOTES:
1. THE LOCATION OF THE EJECTOR CONNECTION TO BE DETERMINED
2. ALL DOTTED-LINE EQUIPMENT TO BE SUPPLIED BY OTHERS. VERIFICATION OF ANY POSTED VALUES IS THE RESPONSIBILITY OF THE SYSTEM INTEGRATOR.
3. ALL EQUIPMENT ON THIS SHEET IS DESIGNED TO BE INSTALLED IN A NON-CLASSIFIED AREA (PER NFPA 820).
4. EQUIPMENT IS PROVIDED BY VEOLIA (UNLESS OTHERWISE NOTED). INTERCONNECTING PIPNG/WIRING AND INSTALLATION BY OTHERS.

VEOLIA WTS CONTROLLED DOCUMENT

REV	DESCRIPTION	ECO	DWN	APPR	APPR	DATE
D	REVISED AS NOTED	-	SBN	MR	KK	25 NOV 24
C	REVISED AS NOTED	-	AS	MR	KK	23 JAN 24
B	REVISED AS NOTED	-	PT	MR	KK	23 MAR 23
A	INITIAL RELEASE	-	TP	MR	KK	17 FEB 23

TOLERANCES UNLESS NOTED
DECIMALS .X .XX .XXX
ANGLES
FRAC

PROPRIETARY AND CONFIDENTIAL: THIS DRAWING AND ALL INFORMATION AND KNOWLEDGE CONTAINED OR REFERRED HEREIN ARE THE CONFIDENTIAL AND PROPRIETARY PROPERTY OF VEOLIA AND AS SUCH ARE INSTRUMENTS OF SERVICE FOR USE SOLELY WITH RESPECT TO THIS PROJECT. THESE INSTRUMENTS OF SERVICE SHALL NOT BE REPRODUCED, TRANSMITTED, DISCLOSED OR USED OTHERWISE IN WHOLE OR IN PART, WITHOUT PRIOR WRITTEN AGREEMENT BY VEOLIA AND MUST BE IMMEDIATELY RETURNED OR DESTROYED UPON REQUEST.

VEOLIA

CUSTOMER INFORMATION
CAESARS LANE WTF
MBR SYSTEM

P&ID,
CIP / BP SYSTEM

DRAWING NUMBER: 510464-WTS-PR-SYS-EN21-DS-106
REVISION: D
REF.: -
DOC. OWNER:
PROJECT NO.: 510464
PART/MATERIAL NO.:
SCALE: NONE
SIZE: D
SHEET: 1 OF 1

FILE LOCATION: C:_ADSKVault\NAM\510464 - Caesars Lane WWIP\1. PFD and P&ID\510464-WTS\PR-SYS-EN21-DS-106.dwg
LAST SAVED: Monday, November 25, 2024 5:05:48 PM

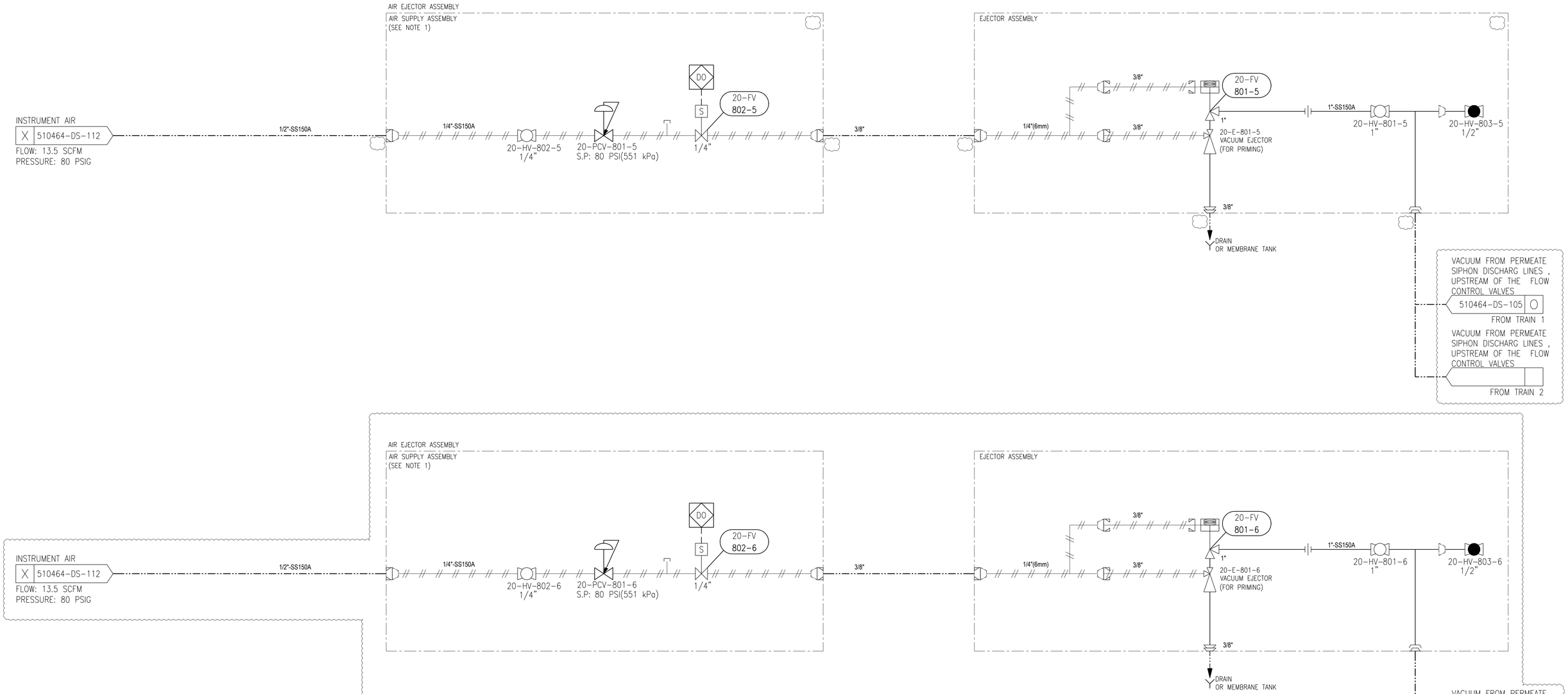

NOTE:

1. BOTH EJECTOR AND INSTRUMENT AIR SUPPLY ASSEMBLIES ARE TO BE LOCATED INDOORS OR TO BE TEMPERATURE AND UV PROTECTED.
2. SEE ELECTRICAL DRAWINGS DURING DETAILED ENGINNERING FOR ELECTRICAL WIRING AND INSULATION.
3. AIR GAP IS REQUIRED ON ELECTOR DISCHARGE LINE EXHAUST TO MEMBRANE TANK OR DRAIN.
4. THE 3/8" TUBING THAT CONNECTS THE TWO SPOOLS TOGETHER IS TO BE PROVIDED AND INSTALLED ONSITE BY OTHERS.
5. 20-HV-803-X IS FOR MEMBRANE PRESSURE DECAY TESTING.VALVE TO REMAINED CLOSED AND LOCKED AT ALL OTHER TIMES.
6. REFER TO TIE POINTS ON EQUIPMENT ARRANGEMENT DRAWINGS.
7. ALL EQUIPMENT ON THIS SHEET ARE DESGINED TO BE INSTALLED IN A NON-CLASSIFIED AREA (PER NFPA 820).

VEOLIA WTS CONTROLLED DOCUMENT

REV	DESCRIPTION	ECO	DWN	APPR	APPR	DATE
D	REVISED AS NOTED	-	SBN	MR	KK	25 NOV 24
C	REVISED AS NOTED	-	AS	MR	KK	23 JAN 24
B	REVISED AS NOTED	-	PT	MR	KK	23 MAR 23
A	INITIAL RELEASE	-	TP	MR	KK	17 FEB 23

TOLERANCES UNLESS NOTED
DECIMALS .X .XX .XXX
ANGLES
FRAC

PROPRIETARY AND CONFIDENTIAL: THIS DRAWING AND ALL INFORMATION AND KNOWLEDGE CONTAINED OR REFERRED HEREIN ARE THE CONFIDENTIAL AND PROPRIETARY PROPERTY OF VEOLIA AND AS SUCH ARE INSTRUMENTS OF SERVICE FOR USE SOLELY WITH RESPECT TO THIS PROJECT. THESE INSTRUMENTS OF SERVICE SHALL NOT BE REPRODUCED, TRANSMITTED, DISCLOSED OR USED OTHERWISE IN WHOLE OR IN PART, WITHOUT PRIOR WRITTEN AGREEMENT BY VEOLIA AND MUST BE IMMEDIATELY RETURNED OR DESTROYED UPON REQUEST.

VEOLIA

CUSTOMER INFORMATION
CAESARS LANE WTF
MBR SYSTEM

P&ID,
EJECTOR ASSEMBLY

DRAWING NUMBER: 510464-WTS-PR-SYS-EN21-DS-109
REVISION: D
REF.: -
DOC. OWNER:
PROJECT NO.: 510464
PART/MATERIAL NO.:
SCALE: NONE
SIZE: D
SHEET: 1 OF 2
LAST SAVED: Monday, November 25, 2024 5:05:53 PM

FILE LOCATION: C:_ADSKVault\NAM\S10464 - Caesars Lane WWTP\1. PFD and P&ID\S10464-WTS\PR-SYS-EN21-DS-109.dwg

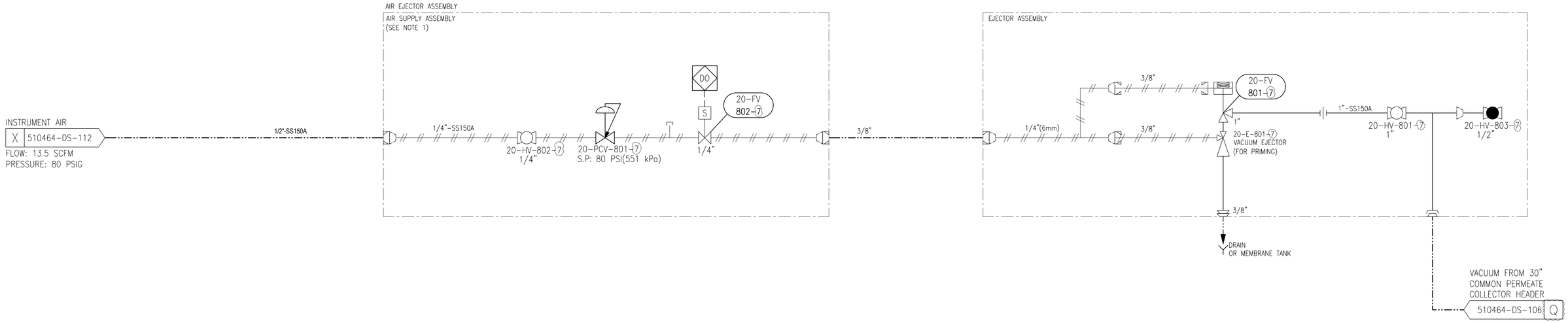

NOTE:

1. BOTH EJECTOR AND INSTRUMENT AIR SUPPLY ASSEMBLIES ARE TO BE LOCATED INDOORS OR TO BE TEMPERATURE AND UV PROTECTED.
2. SEE ELECTRICAL DRAWINGS DURING DETAILED ENGINNERING FOR ELECTRICAL WIRING AND INSULATION.
3. AIR GAP IS REQUIRED ON ELECTOR DISCHARGE LINE EXHAUST TO MEMBRANE TANK OR DRAIN.
4. THE 3/8" TUBING THAT CONNECTS THE TWO SPOOLS TOGETHER IS TO BE PROVIDED AND INSTALLED ONSITE BY OTHERS.
5. 20-HV-803-X IS FOR MEMBRANE PRESSURE DECAY TESTING.VALVE TO REMAINED CLOSED AND LOCKED AT ALL OTHER TIMES.
6. REFER TO TIE POINTS ON EQUIPMENT ARRANGEMENT DRAWINGS.
7. ALL EQUIPMENT ON THIS SHEET ARE DESGINED TO BE INSTALLED IN A NON-CLASSIFIED AREA (PER NFPA 820).

REV	DESCRIPTION	ECO	DWN	APPR	APPR	DATE
D	REVISED AS NOTED	-	SBN	MR	KK	25 NOV 24
C	REVISED AS NOTED	-	AS	MR	KK	23 JAN 24
B	REVISED AS NOTED	-	PT	MR	KK	23 MAR 23
A	INITIAL RELEASE	-	TP	MR	KK	17 FEB 23

PROPRIETARY AND CONFIDENTIAL: THIS DRAWING AND ALL INFORMATION AND KNOWLEDGE CONTAINED OR REFERRED HEREIN ARE THE CONFIDENTIAL AND PROPRIETARY PROPERTY OF VEOLIA AND AS SUCH ARE INSTRUMENTS OF SERVICE FOR USE SOLELY WITH RESPECT TO THIS PROJECT. THESE INSTRUMENTS OF SERVICE SHALL NOT BE REPRODUCED, TRANSMITTED, DISCLOSED OR USED OTHERWISE IN WHOLE OR IN PART, WITHOUT PRIOR WRITTEN AGREEMENT BY VEOLIA AND MUST BE IMMEDIATELY RETURNED OR DESTROYED UPON REQUEST.

TOLERANCES UNLESS NOTED
DECIMALS ANGLES
.X
.XX FRAC
.XXX

VEOLIA

CUSTOMER INFORMATION
CAESARS LANE WTF
MBR SYSTEM

P&ID,
EJECTOR ASSEMBLY

DRAWING NUMBER: 510464-WTS-PR-SYS-EN21-DS-109
REVISION: D
REF.: -
DOC. OWNER:
PROJECT NO.: 510464
PART/MATERIAL NO.:
SCALE: NONE
SIZE: D
SHEET: 2 OF 2
LAST SAVED: Monday, November 25, 2024 5:05:53 PM

FILE LOCATION: C:_ADSKVault\NAM\510464 - Caesars Lane WWIP\1. PFD and P&ID\510464-WTS\PR-SYS-EN21-DS-109.dwg

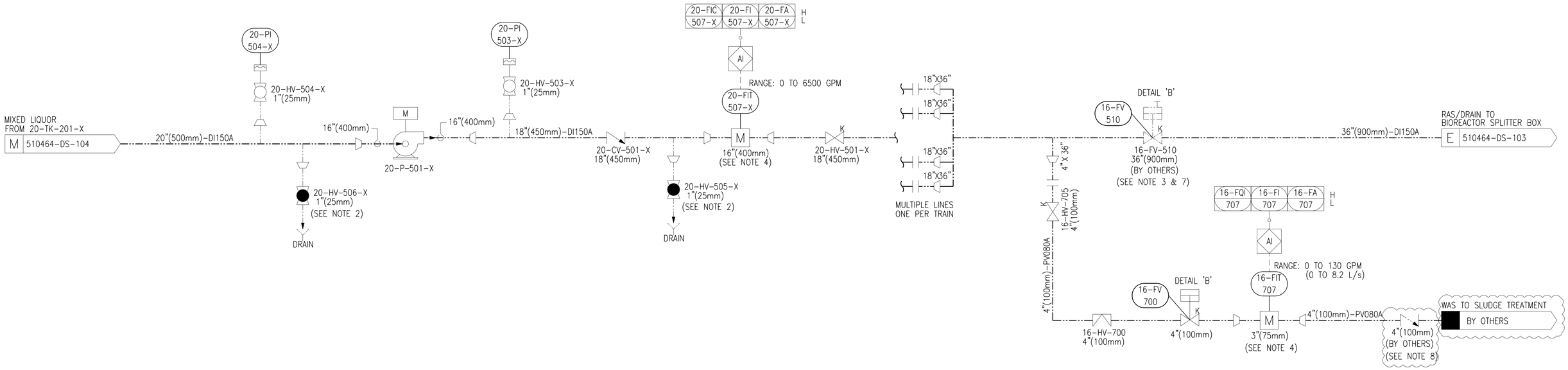

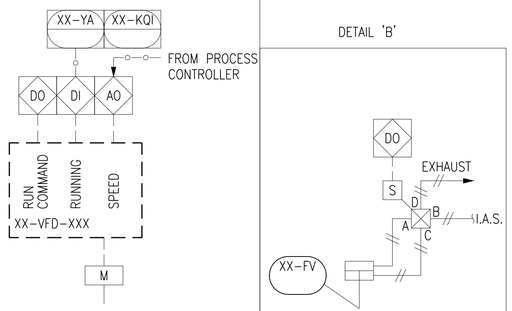

TYP. PUMP WITH VFD CONTROL DETAIL

TYP. PNEUMATIC ACTUATED VALVE CONTROL DETAIL

RAS/WAS/DRAIN PUMP DATA	
NO OF DUTY PUMP	4
NO OF STANDBY PUMP	0
TAG NUMBER	20-P-501-1/2/3/4
TYPE OF PUMP	END-SUCTION CENTRIFUGAL
PUMP MAX. RAS FLOW	6,302 GPM @ 12' TDH
PUMP MIN. RAS FLOW	3,125 GPM @ 12' TDH
PUMP DRAIN CYCLE FLOW	1,900 GPM @ 12' TDH
PUMP MIN. CONTINUOS FLOW	1,550 GPM
SPEED CONTROL	VFD
ELECTRIC MOTOR	TEFC, 30.0 HP AT 590 RPM
VOLTAGE	480V/3PH/60HZ

NOTES:

1. ALL DOTTED-LINE EQUIPMENT BY OTHERS. STAINLESS STEEL PIPING OPTIONAL.VERIFICATION OF ANY POSTED VALUES IS THE RESPONSIBILITY OF THE SYSTEM INTEGRATOR
2. FLOOR DRAINS TO BE PROVIDED AND PIPED INTO BY GENERAL CONTRACTOR, AS REQUIRED.
3. SUFFICIENT BACK-PRESSURE MUST BE AVAILABLE ON THE COMMON RAS LINE TO ALLOW FOR PREFERENTIAL FLOW TO WAS DESTINATION IF REQUIRED, AN AUTOMATICALLY ACTUATED VALVE CAN BE ADDED TO THE COMMON RAS LINE FOR THIS PURPOSE.
4. FOLLOW MANUFACTURER'S RECOMMENDATION REGARDING INSTALLATION REQUIREMENTS, INCLUDING NUMBER OF STRAIGHT PIPE RUNS. PIPING MUST BE ARRANGED SO MAG IS ALWAYS FLOODED.
5. ALL EQUIPMENT ON THIS SHEET IS DESIGNED TO BE INSTALLED IN A NON-CLASSIFIED AREA (PER NFPA 820).
6. FINAL SIZING AND DESIGN TO BE VERIFIED DURING DETAILED PROJECT ENGINEERING.
7. THE ACTUATED VALVE WITH EXTENDED TRAVEL STOP (TO BE SUPPLIED BY OTHERS)
8. BALL CHECK VALVES TO PREVENT BACK FLOW FROM SCUM DISCHARGE PUMPS (TO BE SUPPLIED BY OTHERS)

VEOLIA WTS CONTROLLED DOCUMENT

REV	DESCRIPTION	ECO	DWN	APPR	APPR	DATE
D	REVISED AS NOTED	-	SBN	MR	KK	25 NOV 24
C	REVISED AS NOTED	-	AS	MR	KK	23 JAN 24
B	REVISED AS NOTED	-	PT	MR	KK	23 MAR 23
A	INITIAL RELEASE	-	TP	MR	KK	17 FEB 23

PROPRIETARY AND CONFIDENTIAL: THIS DRAWING AND ALL INFORMATION AND KNOWLEDGE CONTAINED OR REFERRED HEREIN ARE THE CONFIDENTIAL AND PROPRIETARY PROPERTY OF VEOLIA AND AS SUCH ARE INSTRUMENTS OF SERVICE FOR USE SOLELY WITH RESPECT TO THIS PROJECT. THESE INSTRUMENTS OF SERVICE SHALL NOT BE REPRODUCED, TRANSMITTED, DISCLOSED OR USED OTHERWISE IN WHOLE OR IN PART, WITHOUT PRIOR WRITTEN AGREEMENT BY VEOLIA AND MUST BE IMMEDIATELY RETURNED OR DESTROYED UPON REQUEST.

TOLERANCES UNLESS NOTED
DECIMALS .X .XX .XXX
ANGLES
FRAC

VEOLIA

CUSTOMER INFORMATION
CAESARS LANE WTF
MBR SYSTEM

P&ID,
RAS/WAS/DRAIN PUMP

DRAWING NUMBER	REVISION
510464-WTS-PR-SYS-EN21-DS-110	D
REF.: -	DOC. OWNER:

PROJECT NO.	PART/MATERIAL NO.	SCALE	SIZE	SHEET
510464		NONE	D	1 OF 1

LAST SAVED: Monday, November 25, 2024 5:05:58 PM

FILE LOCATION: C:_ADSKVault\NAM\510464 - Caesars Lane WWTP\1. PFD and P&ID\510464-WTS-PR-SYS-EN21-DS-110.dwg

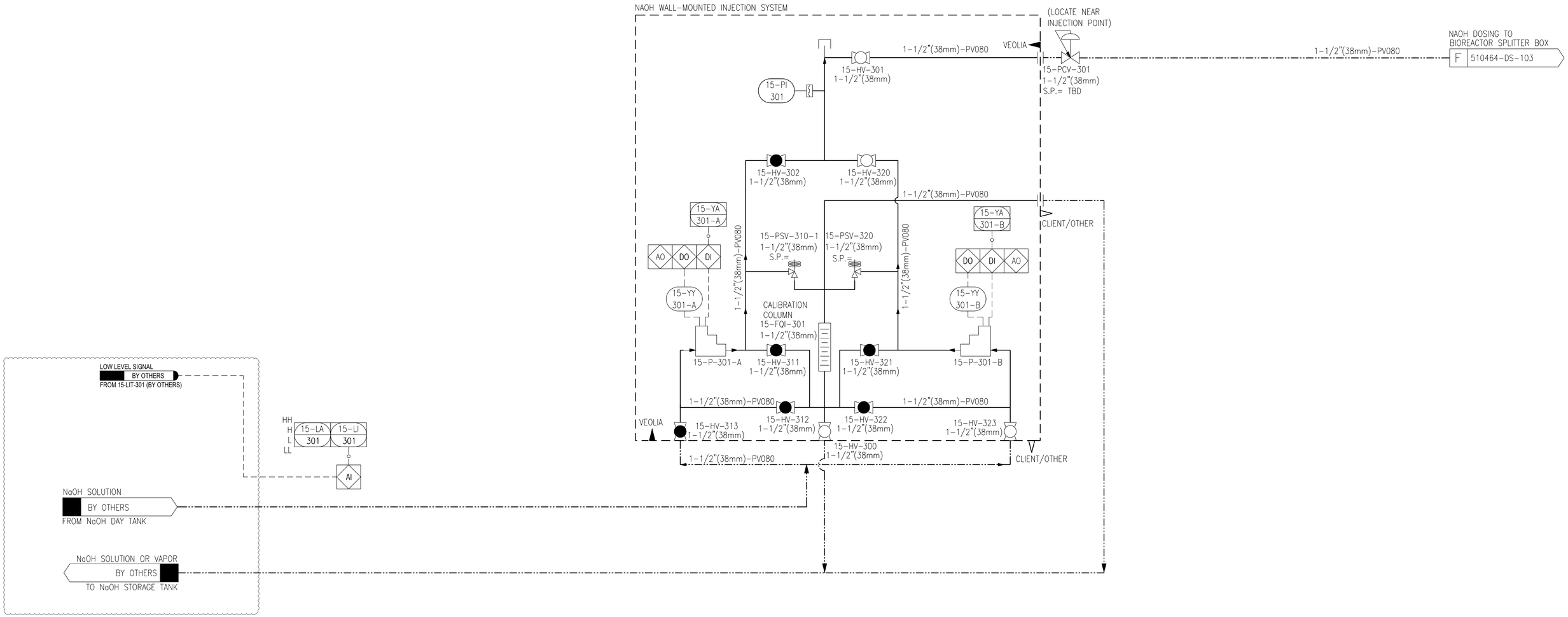

ALKALINITY PUMP DATA	
TAG NUMBERS	15-P-301-A/B
# OF PUMPS	1 DUTY / 1 STANDBY
DESIGN FLOW AND PRESSURE	TBD
MAX. FLOW AND PRESSURE	2.2 GPM @ 100 PSIG
VOLTAGE	120 VAC/ 1 ph/ 60 Hz
SUPPLIER, MODEL	PROMINENT

VEOLIA WTS CONTROLLED DOCUMENT

NOTES:

1. ALL DOTTED LINES/EQUIPMENT BY OTHERS
2. ALL SYSTEM COMPONENTS PRESENTED ON THIS DRAWING ARE WALL MOUNTED.
3. ALL EQUIPMENT DESIGNED TO BE INSTALLED IN NON-CLASSIFIED AREA (PER NFPA 820).
4. VENT ALL CHEMICAL TANKS APPROPRIATELY.
5. CHEMICAL CONTAINMENT BY OTHERS.

REV	DESCRIPTION	ECO	DWN	APPR	APPR	DATE
D	REVISED AS NOTED	-	SBN	MR	KK	25 NOV 24
C	REVISED AS NOTED	-	AS	MR	KK	23 JAN 24
B	REVISED AS NOTED	-	PT	MR	KK	23 MAR 23
A	INITIAL RELEASE	-	TP	MR	KK	17 FEB 23

TOLERANCES UNLESS NOTED
DECIMALS .X .XX .XXX
ANGLES
FRAC

PROPRIETARY AND CONFIDENTIAL: THIS DRAWING AND ALL INFORMATION AND KNOWLEDGE CONTAINED OR REFERRED HEREIN ARE THE CONFIDENTIAL AND PROPRIETARY PROPERTY OF VEOLIA AND AS SUCH ARE INSTRUMENTS OF SERVICE FOR USE SOLELY WITH RESPECT TO THIS PROJECT. THESE INSTRUMENTS OF SERVICE SHALL NOT BE REPRODUCED, TRANSMITTED, DISCLOSED OR USED OTHERWISE IN WHOLE OR IN PART, WITHOUT PRIOR WRITTEN AGREEMENT BY VEOLIA AND MUST BE IMMEDIATELY RETURNED OR DESTROYED UPON REQUEST.

VEOLIA

CUSTOMER INFORMATION

CAESARS LANE WTF
MBR SYSTEM

P&ID,

CHEMICAL DOSING SYSTEM

BIOLOGICAL PROCESS

DRAWING NUMBER: 510464-WTS-PR-SYS-EN21-DS-111
REVISION: D
REF.: -
DOC. OWNER:
PROJECT NO.: 510464
PART/MATERIAL NO.:
SCALE: NONE
SIZE: D
SHEET: 1 OF 2

LAST SAVED: Friday, November 29, 2024 6:03:25 PM

FILE LOCATION: C:_ADSKVault\NAM\510464 - Caesars Lane WWIP\1. PID and P&ID\510464-WTS-PR-SYS-EN21-DS-111.dwg

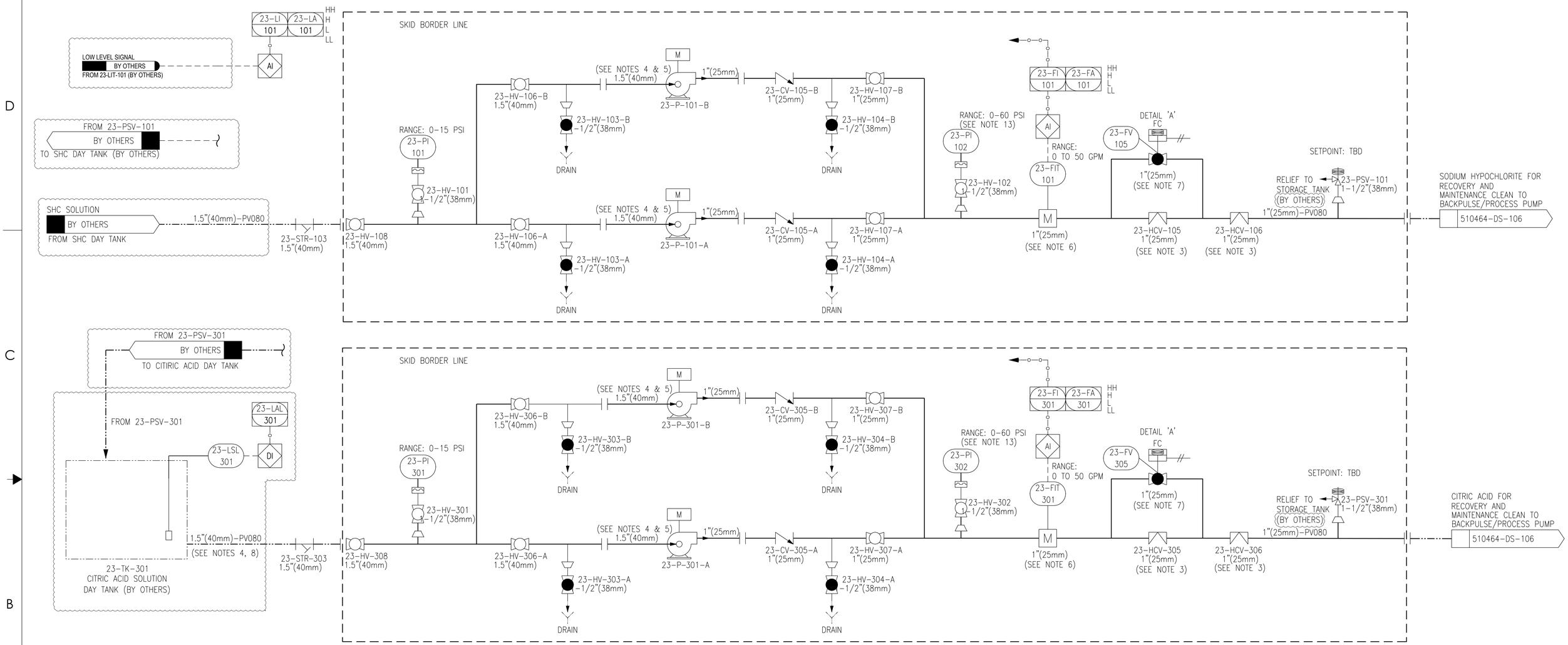

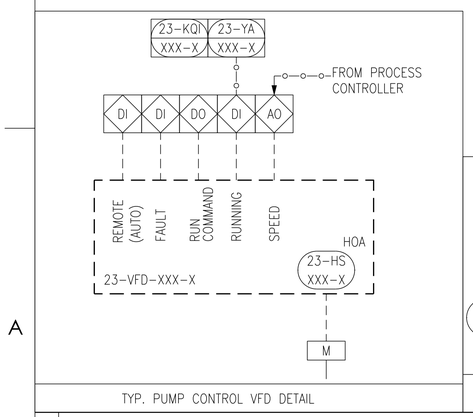

TYP. PUMP CONTROL VFD DETAIL

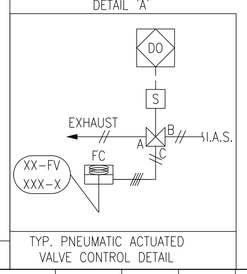

TYP. PNEUMATIC ACTUATED VALVE CONTROL DETAIL

GENERAL PUMP INFO	
SODIUM HYPOCHLORITE	12.0% w/w
NO. OF DUTY PUMPS	1
NO OF STANDBY PUMPS	1
NO. OF SHELF SPARE PUMPS	1 (SEE NOTE 11)
TYPE OF PUMP	END-SUCTION CENTRIFUGAL
TAG NUMBERS (INSTALLED)	23-P-101-A/B
SPEED CONTROL	VFD
ELECTRIC MOTOR	1.0HP @ 3450RPM
VOLTAGE	460 V/3 ph/60 Hz
PUMP MODEL	DB9V-R-FF-M219

INSTALLED	DESIGN FLOW	TDH
MC	2.67 GPM	25 PSIG
RC	14.70 GPM	25 PSIG

BUILDOUT	MAX FLOW	TDH
MC	2.82 GPM	25 PSIG
RC	15.51 GPM	25 PSIG

GENERAL PUMP INFO	
CITRIC ACID	50% w/w
NO OF DUTY PUMPS	1
NO OF STANDBY PUMPS	1
NO. OF SHELF SPARE PUMPS	1 (SEE NOTE 11)
TYPE OF PUMP	END-SUCTION CENTRIFUGAL
TAG NUMBERS (INSTALLED)	23-P-301-A/B
SPEED CONTROL	VFD
ELECTRIC MOTOR	1.0HP @ 3450RPM
VOLTAGE	460 V/3 ph/60 Hz
PUMP MODEL	DB9V-R-FF-M219

INSTALLED	DESIGN FLOW	TDH
MC	5.19 GPM	25 PSIG
RC	5.72 GPM	25 PSIG

BUILDOUT	MAX FLOW	TDH
MC	5.47 GPM	25 PSIG
RC	6.02 GPM	25 PSIG

NOTES: (REVIEW AND REMOVE BEFORE EXTERNAL RELEASE)

1. ALL DOTTED-LINE EQUIPMENT NOT SUPPLIED BY VWTS. _ _ _ _ _ _ VERIFICATION OF ANY POSTED VALUES IS THE RESPONSIBILITY OF THE SYSTEM INTEGRATOR.
2. DRAINS FROM SODIUM HYPOCHLORITE SOLUTION AND ANY ACID SOLUTION SHOULD NOT BE MIXED.
3. 23-HCV-105/305 TO BE ADJUSTED FOR MAINTENANCE CLEAN FLOW. 23-HCV-106/306 TO BE ADJUSTED FOR RECOVERY CLEAN FLOW. IF THERE IS ONLY RECOVERY CLEAN FLOW THEN 23-HCV-105/305 AND 23-FV-105/305 CAN BE REMOVED.
4. BOTTOM CONNECTION FROM THE TANK IS MANDATORY. FLOODED SUCTION SETUP REQUIRED FOR PUMP OPERATION.
5. REFER TO MANUFACTURER'S I&O MANUAL FOR PIPING AND INSTALLATION REQUIREMENTS.
6. ALL EQUIPMENT ON THIS SHEET IS DESIGNED TO BE INSTALLED IN A NON-CLASSIFIED AREA (PER NFPA 820).
7. VALVE TO OPEN ONLY FOR RECOVERY CLEAN PROCESS.
8. TANK DESIGN, INCLUDING SECONDARY CONTAINMENT AND VENTING IF REQUIRED, IS BY OTHERS.
9. FLOOR DRAINS TO BE PROVIDED AND PIPED INTO BY GENERAL CONTRACTOR, AS REQUIRED.
10. OUTDOOR PIPING/EQUIPMENT TO BE HEAT-TRACED AND INSULATED BY OTHERS.
11. EQUIPMENT AND ENVIRONMENTAL PROTECTION, IF REQUIRED, IS BY OTHERS.
12. GASKETS AND HARDWARE SHOULD BE COMPATIBLE WITH SELECTED CHEMICAL, (NOT PROVIDED BY VWTS).
13. ALL BALL VALVES SUPPLIED FOR CHEMICALS ARE TO BE VENTED WITH VITON SEALS.

REV	DESCRIPTION	ECO	DWN	APPR	APPR	DATE
D	REVISED AS NOTED	-	SBN	MR	KK	25 NOV 24
C	REVISED AS NOTED	-	RR	MR	KK	23 JAN 24
B	REVISED AS NOTED	-	PT	MR	KK	23 MAR 23
A	INITIAL RELEASE	-	TP	MR	KK	17 FEB 23

TOLERANCES UNLESS NOTED
DECIMALS .X .XX .XXX
ANGLES
FRAC

PROPRIETARY AND CONFIDENTIAL: THIS DRAWING AND ALL INFORMATION AND KNOWLEDGE CONTAINED OR REFERRED HEREIN ARE THE CONFIDENTIAL AND PROPRIETARY PROPERTY OF VEOLIA AND AS SUCH ARE INSTRUMENTS OF SERVICE FOR USE SOLELY WITH RESPECT TO THIS PROJECT. THESE INSTRUMENTS OF SERVICE SHALL NOT BE REPRODUCED, TRANSMITTED, DISCLOSED OR USED OTHERWISE IN WHOLE OR IN PART, WITHOUT PRIOR WRITTEN AGREEMENT BY VEOLIA AND MUST BE IMMEDIATELY RETURNED OR DESTROYED UPON REQUEST.

VEOLIA

CUSTOMER INFORMATION

CAESARS LANE WTF
MBR SYSTEM

P&ID,

MEMBRANE CLEANING CHEM. SYSTEMS

CENTRIFUGAL, MAG DRIVE PUMP

DRAWING NUMBER	REVISION
510464-WTS-PR-SYS-EN21-DS-111	D
REF.: -	DOC. OWNER:

PROJECT NO.	PART/MATERIAL NO.	SCALE	SIZE	SHEET
510464		NONE	D	2 OF 2

LAST SAVED: Friday, November 29, 2024 6:03:25 PM

FILE LOCATION: C:_ADSKVault\NAM\510464 - Caesars Lane WWTP\1. PFD and P&ID\510464-WTSPR SYS-EN21-DS-111.dwg

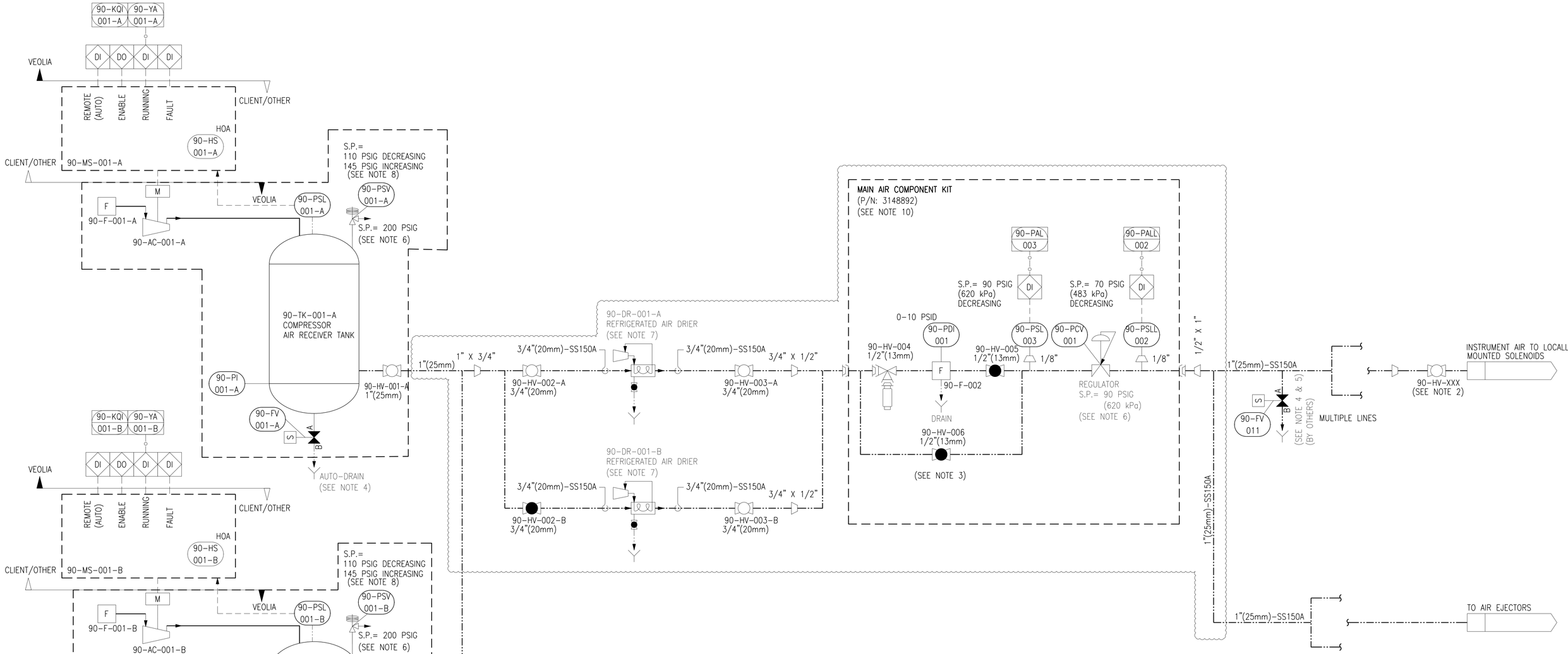

GENERAL COMPRESSOR INFO	PHASE 1
NO OF DUTY COMPRESSORS	1
NO OF STANDBY COMPRESSORS	1
TOTAL NO OF AIR RECEIVER TANKS	2
TAG NUMBERS FOR COMPRESSORS	90-AC-001-A/B
TAG NUMBERS FOR AIR RECEIVER TANKS	90-TK-001-A/B
TYPE OF COMPRESSORS	RECIPROCATING
CAPACITY	35 CFM AT 175 PSIG
AIR RECEIVER VOLUME	120 GAL
MODEL	ATLAS COPCO CR7.5
SPEED CONTROL	NO
ELECTRIC MOTOR	TEFC, 10 HP AT 1800 RPM
VOLTAGE	480 VAC / 3 ph / 60 Hz

FILTER DATA	
TAG NUMBERS	90-F-002
FILTER TYPE	100% PRIMARY COALESCING FILTER WITH AUTODRAIN
FILTER SIZE	1 µm

AIR DRYER DATA	
TAG NUMBERS	90-DR-001-A/B
DRYER TYPE	REFRIGERATED
DRYER CAPACITY	30 CFM
MODEL INFO	ATLAS COPCO FX15
ELECTRIC INFO	120 VAC / 1 ph / 60 Hz

NOTES:

1. EQUIPMENT SUPPLIED BY VWTS AND INSTALLED BY OTHERS UNLESS NOTED.
2. INSTRUMENT AIR DISTRIBUTION NETWORK INCLUDING ISOLATION VALVE SUPPLIED BY OTHERS AS NEEDED.
3. HANDLE FOR BYPASS VALVE TO BE REMOVED OR VALVE LOCKED IN CLOSED POSITION.
4. TIMED DRAIN VALVE SOLENOIDS CONNECT TO LOCAL 120VAC. ADJUST INTERVAL AND DURATION SETTINGS ON SOLENOID TO AMBIENT CONDITIONS.
5. LOW POINT DRAIN VALVE (SUPPLIED AND POWERED BY OTHERS) TO BE LOCATED AT LOW POINT IN PIPING WHERE MOISTURE MAY ACCUMULATE. ADDITIONAL VALVE MAY BE REQUIRED BASED ON PIPE ROUTING.
6. REGULATING VALVE TO BE SET IN THE FIELD BY VWTS FSR.
7. CONNECT AIR DRYER TO LOCAL 120VAC. ONLY ONE DRYER TO OPERATE AT A TIME AND TO BE ROTATED MANUALLY ON A WEEKLY BASIS. IF ONLY ONE DRYER IS SUPPLIED A BYPASS LINE WITH MANUAL VALVE SHALL BE SUPPLIED.
8. CONTRACTOR TO WIRE AIR COMPRESSOR PRESSURE SWITCH TO MCC. VWTS FSR TO CONFIRM AND ADJUST PRESSURE SETPOINT DURING COMMISSIONING.
9. FINAL SIZING AND DESIGN TO BE VERIFIED DURING DETAILED PROJECT ENGINEERING.
10. MAIN AIR COMPONENT KIT, SUPPLIED BY VWTS, INSTALLED BY THE CONTRACTOR

VEOLIA WTS CONTROLLED DOCUMENT

REV	DESCRIPTION	ECO	DWN	APPR	APPR	DATE
D	REVISED AS NOTED	-	SBN	MR	KK	25 NOV 24
C	REVISED AS NOTED	-	AS	MR	KK	23 JAN 24
B	REVISED AS NOTED	-	PT	MR	KK	23 MAR 23
A	INITIAL RELEASE	-	TP	MR	KK	17 FEB 23

TOLERANCES UNLESS NOTED
DECIMALS .X .XX .XXX
ANGLES
FRAC

PROPRIETARY AND CONFIDENTIAL: THIS DRAWING AND ALL INFORMATION AND KNOWLEDGE CONTAINED OR REFERRED HEREIN ARE THE CONFIDENTIAL AND PROPRIETARY PROPERTY OF VEOLIA AND AS SUCH ARE INSTRUMENTS OF SERVICE FOR USE SOLELY WITH RESPECT TO THIS PROJECT. THESE INSTRUMENTS OF SERVICE SHALL NOT BE REPRODUCED, TRANSMITTED, DISCLOSED OR USED OTHERWISE IN WHOLE OR IN PART, WITHOUT PRIOR WRITTEN AGREEMENT BY VEOLIA AND MUST BE IMMEDIATELY RETURNED OR DESTROYED UPON REQUEST.

VEOLIA

CUSTOMER INFORMATION: CAESARS LANE WTF MBR SYSTEM

P&ID, AIR COMPRESSOR

DRAWING NUMBER	REVISION
510464-WTS-PR-SYS-EN21-DS-112	D

REF.: - DOC. OWNER:

PROJECT NO.	PART/MATERIAL NO.	SCALE	SIZE	SHEET
510464		NONE	D	1 OF 1

FILE LOCATION: C:_ADSKVault\NAM\510464 - Caesars Lane WWIP\1. PFD and P&ID\510464-WTSPR-SYS-EN21-DS-112.dwg

LAST SAVED: Monday, November 25, 2024 5:06:09 PM

VEOLIA WTS
CONTROLLED DOCUMENT

REV	DESCRIPTION	WRITTEN BY	CHECKED BY	APPROVED BY	DATE DD-MM-YY
C	ISSUED FOR APPROVAL	RP	RP	RP	01-12-2024
B	ISSUED FOR APPROVAL	RP	RP	RP	30-01-2024
[illegible]	ISSUED FOR APPROVAL	RP	RP	RP	28-03-2023

DOCUMENT TYPE:	VEOLIA DOCUMENT NUMBER:					
	CONTRACT	ISSUER	DISCIPLINE	PRODUCT	PHASE	TYPE	CHRONO
CUTSHEET PACKAGE	**510464**	**WTS**	**ME**	**MAT**	**MISC**	**DT**	**001**

MECHANICAL TRANSMITTAL

PROPRIETARY AND CONFIDENTIAL : THIS DOCUMENT AND ALL INFORMATION AND KNOWLEDGE CONTAINED OR REFERRED HEREIN ARE THE CONFIDENTIAL AND PROPRIETARY PROPERTY OF VEOLIA AND AS SUCH ARE INSTRUMENTS OF SERVICE FOR USE SOLELY WITH RESPECT TO THIS PROJECT. THESE INSTRUMENTS OF SERVICE SHALL NOT BE REPRODUCED, TRANSMITTED, DISCLOSED OR USED OTHERWISE, IN WHOLE OR IN PART, WITHOUT PRIOR WRITTEN AGREEMENT BY VEOLIA AND MUST BE IMMEDIATELY RETURNED OR DESTROYED UPON REQUEST.

ZeeWeed* 500 for Large Municipal MBR

FACT SHEET

Experience, Expand, Evolve with ZeeWeed



Addressing the everchanging needs of Municipal customers looking to:

- Lower the CAPEX associated with expanding capacity
- Increase treatment capacity in a smaller footprint
- Reduce annual energy and maintenance costs
- Enjoy longer membrane life with simplified maintenance

Performance

- High flux dedicated MBR membrane chemistry since 2007 with permeability > 900 lmh/bar
- True UF membrane for over 25 years with proven 0.035 µm nominal pore size
- Patented LEAPmbr aeration providing exceptional energy consumption savings
- Superior fiber strength, 60x greater than non-reinforced PVDF membranes

Reliability

Exceptional membrane reliability and product life with many municipal customers achieving 12 to 16 years operation; longest proven life 21 years!

Veolia stands by its product offering Peace of mind with warranties up to 15 years in duration.

Proven Experience

Nearly 2500 MBRs globally running with ZeeWeed 500 membranes. More than 1.3 million operating modules treating over 27000 MLD (7200 MGD) daily.

Flexibility & Simplicity

Configurable product to provide plant layout versatility for easy future expansion even for those with footprint constraints.

Demonstrated simple retrofit solutions for conventional upgrades and more than 15 other MBR membrane suppliers.

ZeeWeed 500 in Action



Henriksdal WWTP, Sweden

ADF 536 MLD (142 MGD)

MDF 864 MLD (228 MGD) PH1

Commissioned 2020



Luo Fang WWTP, China

ADF 400 MLD (106 MGD)

MDF 462 MLD (122 MGD)

Commissioned 2018



Seine Aval WWTP, France

ADF 218 MLD (59 MGD)

MDF 348 MLD (92 MGD)

Commissioned 2017



Euclid WWTF, USA

ADF 83 MLD (22 MGD)

MDF 250 MLD (66 MGD)

Commissioned 2018



Beijin Shunyi WWTP, China

ADF 180 MLD (48 MGD)

MDF 234 MLD (62 MGD)

Commissioned 2016



Brussels Sud WWTP, Belgium

ADF 86 MLD (23 MGD)

MDF 190 MLD (44 MGD)

Commissioned 2018



Oxford WWTP, Canada

ADF 13 MLD (3.6 MGD)

MDF 25 MLD (6.8 MGD)

Commissioned 2008

Proven membrane life 14 years



Traverse City WWTP, USA

ADF 27 MLD (7.1 MGD)

MDF 64 MLD (17 MGD)

Commissioned 2005

Proven membrane life 16 years



Brescia WWTP, Italy

ADF 30 MLD (8 MGD)

MDF 60 MLD (16 MGD)

Commissioned 2002

Proven membrane life 14 years

Cassette Properties



Table 1: Cassette Dimensions

Product	Width (A) mm (in)	Length (B) mm (in)	Height (C) mm (in)
500EV-64M	1,744 (68.7)	2,136 (84.1)	2,735 (107.7)
500D-52M			2,562 (100.9)

Table 2: Cassette Tie Points and Weights

Application	Product	Max. # of Modules	Min. # of Modules	Permeate Connection	Air Connection	Max. Shipping Weight [1] kg (lb)	Wet Weight [2] kg (lb)	Lifting Design Weight [3] kg (lb)	Cassette Material [4]
LEAPmbr	EV-64M	64	32	1 x 8” vert. pipe	1 x 3” FNPT half coupling	2,091 (4,610)	2,329 (5,135)	4,536 (10,000)	316L SS frame with engineered plastics
	D-52M	52	26	1 x 6” vert. pipe	1 x 3” FNPT half coupling	1,892 (4,172)	2,184 (4,816)	4,536 (10,000)	

1 Crated with maximum number of modules

2 Wet weight of a clean, fully populated cassette. Lower module population will reduce this value. Cassette support method and lifting module can also vary this weight, depending on design. An estimate is used based on several standard designs.

3 Product lifting design weight assumes a fully populated cassette with solids accumulation, standard lifting module and hanging arms. Alternative support and lifting methods could vary this value.

4 Alternative grades of stainless steel offered for cassettes are 304L, 2205 and SMO254 as required.

Membrane Properties

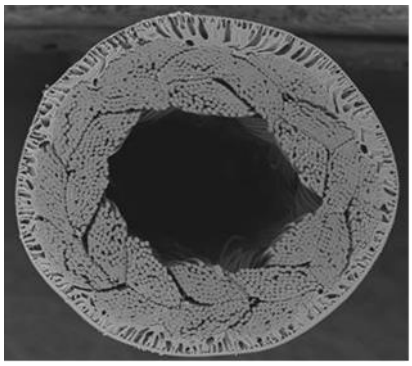

Membrane cross-section

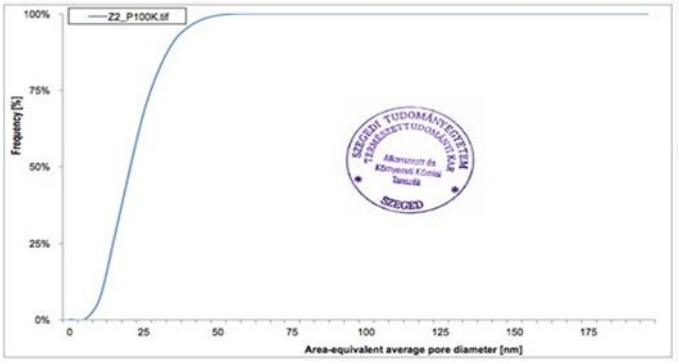

3rd party certified UF pore size



Table 3: module dimensions

Application	Product	Width – A mm (in)	Length - B mm (in) Header-to-Header	Depth – C mm (in)
MBR	500EV	861 (33.9)	2,051 (80.7)	51 (2.0)
	500D	844 (33.2)	1,940 (76.4)	49 (1.9)

Table 4: Module Properties

Application	Membrane Surface Area m^2 (ft^2)	Lifting Weight [1] kg (lb)	Material	Nominal Pore Size [2] (µm)	Fiber Diameter [3] (mm)	Surface Properties	Fiber Tensile Strength [4] (N)	Flow Path
MBR	500EV 49.2 (530)	29 (64)	PVDF	0.04	2.2	Non-ionic & Hydrophilic	>600	Submerged, Outside-In
	500D 40.0 (430)	28 (61)						

1 Clean wet weight excluding any solids accumulation

2 Nominal pore size is often rounded to 40nm (0.04 micron) for simplicity.

3 Fiber dimensions have been rounded to the nearest decimal place for simplicity.

4 Tensile strength measured using a modification of ASTM protocol (D 3822)

Table 5: Operating & Cleaning Specifications [1]

Application	TMP Range kPa (psig)	Typ. Aeration Nm^3/h/cassette (scfm/cassette)	Max. Operating Temp. °C (°F)	Operating pH Range	Backpulse Type	Max. Cleaning Temp. °C (°F)	Cleaning pH Range	Max. lifetime exposure Cl2 (ppm)
MBR	-55 to 55 (-8 to +8)	500EV 222-445 Nm^3/h (132-264 SCFM) 500D 182-363 Nm^3/h (108-215 SCFM)	40 (104)	5.0-9.5	Relax Aeration (Standard) Backpulse-capable (as-required)	40 (104)	2.0 – 10.5 (<30°C) 2.0 -10.0 (30-40°C)	1,000,000

[1] Cassettes can be populated with 26 to 52 modules (500D), or 32 to 64 modules (500EV). Normalized ADF flow for fully populated cassette at 150m ASL, 20°C wastewater temperature. Delivered value at modules will differ based on site conditions. Lower cassette populations will have a lower aeration rate.

ZeeWeed 500 Series Products

The ZeeWeed 500 series of membranes have been applied to MBR applications since 1997 when the ZW500A was introduced. There are four products within the current 5th generation – the ZW500M (laboratory use), ZW500S, ZW500D and ZW500EV. All ZeeWeed 500 series MBR products use the same PVDF chemistry formulation, designed specifically for membrane bioreactor application.

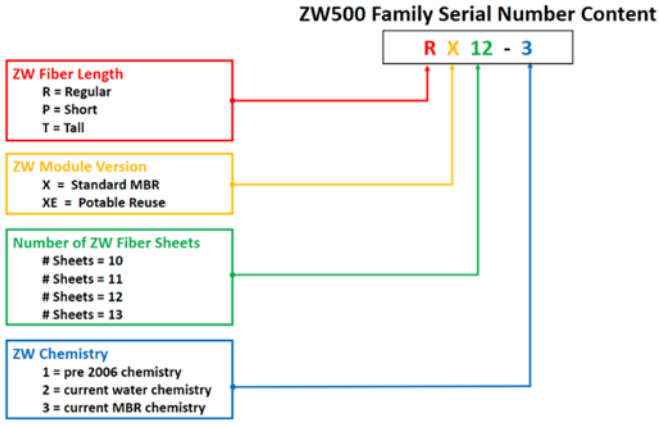

ZeeWeed 500 Product Identification

All ZeeWeed 500 series products have a product type identification code tied to the product specification. The code provides information on the version of the module, the fiber length, the number of sheets, and the membrane chemistry. It is typically found with the module serial number and takes the format of 1 to 3 letters, a number, and usually, but not always, a dash and third number.



Contact Us

If you would like to learn more about how Veolia can provide MBR solutions for your large municipal projects, contact your Veolia representative or visit our website.

Veolia Water Technologies
Please contact us via:
www.veoliawatertechnologies.com

*Trademark of Veolia; may be registered in one or more countries. ©2022 Veolia. All rights reserved. FSmbiZW500_LargeMBR_EN.docx May-22

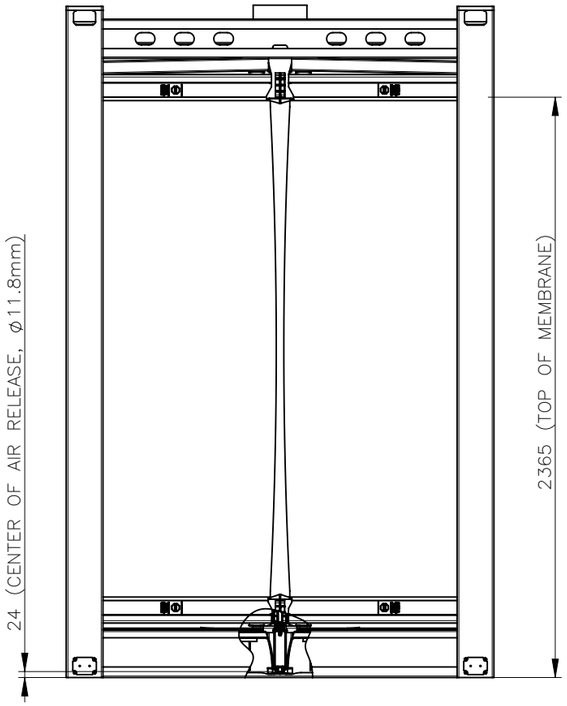

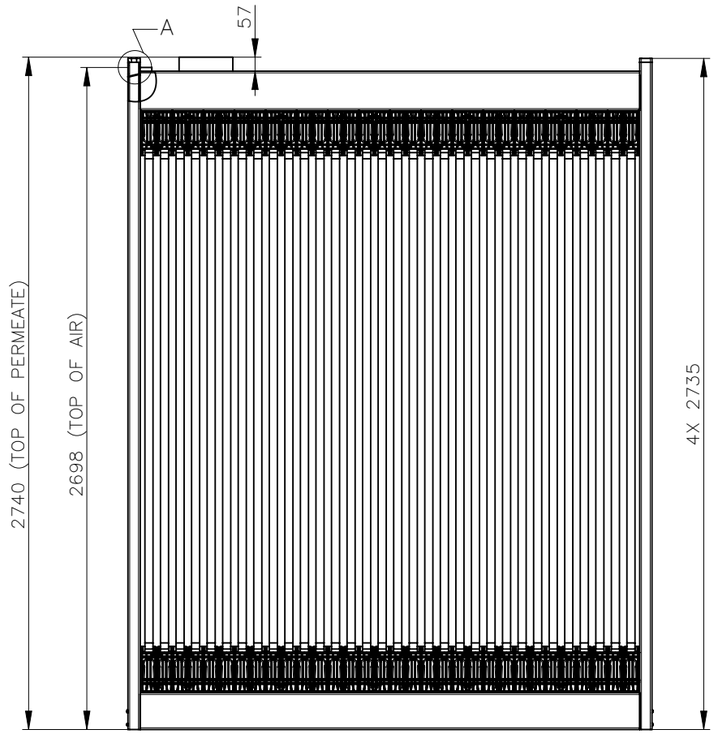

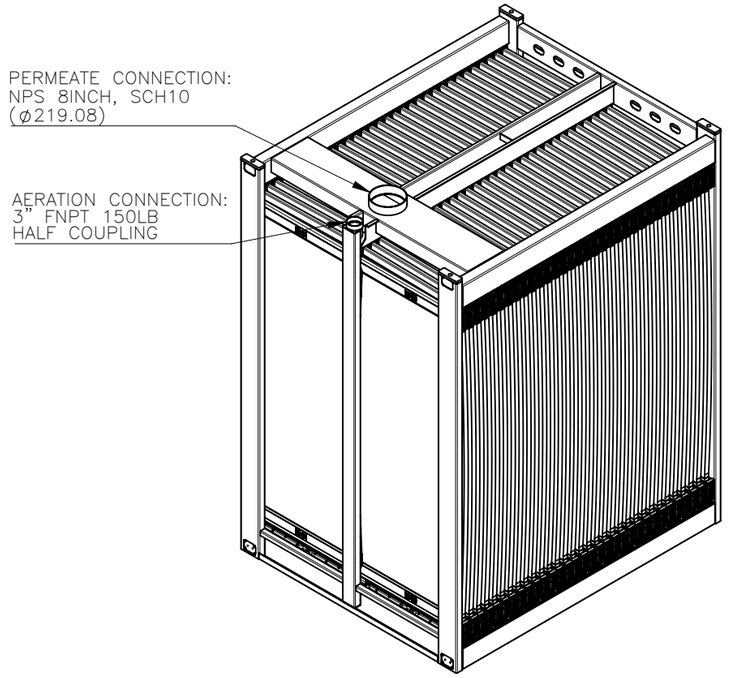

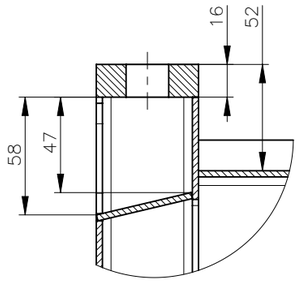

4X DETAIL A
SCALE 1 : 3

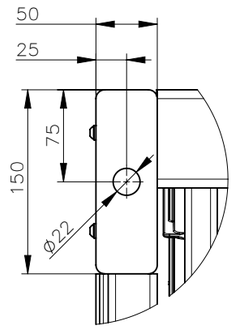

4X DETAIL B
SCALE 1 : 5

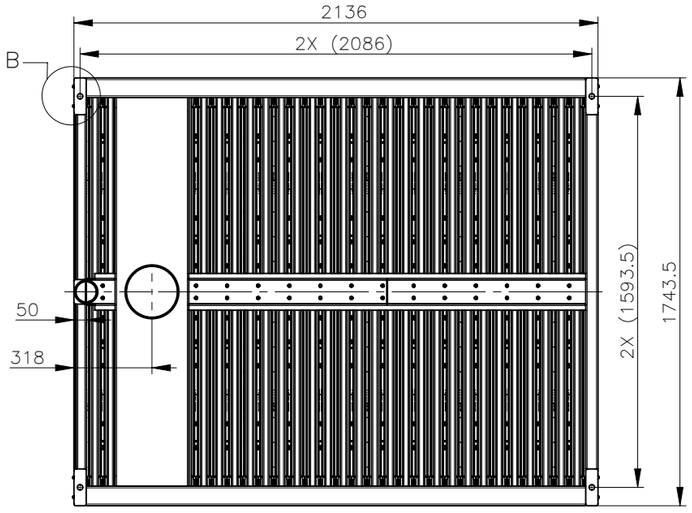

TAGS:

A-1/2/3/4
B-1/2/3/4
C-1/2/3/4
D-1/2/3/4
E-1/2/3/4
F-1/2/3/4

#	DESCRIPTION	–	INIT	INIT	INIT	YYMMDD
REV.	REVISION DESCRIPTION	ECO	DRWN	CHKD	APVD	DATE (YYMMDD)

suez Water Technologies & Solutions
GLOBAL HEADQUARTERS: TREVOSE, PA USA +1-215-355-3300 SUEZWATERTECHNOLOGIES.COM

THIS DRAWING, THE DESIGN AND THE PATENTS IT COVERS, IS THE PROPERTY OF SUEZ WATER TECHNOLOGIES & SOLUTIONS AND ITS AFFILIATES AND THE INFORMATION CONTAINED HEREIN IS PROPRIETARY INFORMATION WHICH IS NOT TO BE DISCLOSED TO ANYONE WITHOUT PRIOR WRITTEN CONSENT OF SAID COMPANY. THIS DRAWING IS TO BE USED EXCLUSIVELY FOR THE PURPOSES EXPRESSLY AUTHORIZED BY SUEZ WATER TECHNOLOGIES & SOLUTIONS AND ITS AFFILIATES THROUGH ITS OFFICERS AND QUALIFIED REPRESENTATIVES AND FOR NO OTHER PURPOSE. NEITHER THIS DRAWING, NOR ANY PORTION THEREOF, SHALL BE REPRODUCED WITHOUT THE PRIOR WRITTEN CONSENT OF SAID COMPANY, AND ANY SUCH REPRODUCTION SHALL BEAR THIS NOTICE.

		PROJECTION	APPROVALS	DATE (YYMMDD)
GEOMETRICAL PRODUCT SPECIFICATION ACCORDING TO ISO 1101:2005.			DRWN IA	220316
ALL DIMENSIONS ARE IN mm UNLESS OTHERWISE SPECIFIED	SCALE 1:25		CHKD RB	220316
GENERAL TOLERANCES ACCORDING TO ISO 2768:1989-mK-E.	SIZE A3		APVD GB	220316

MATERIAL –
SIZE –
STANDARD –
FINISH –

ZW500EV
CASSETTE ASSEMBLY – TX64
SYSTEM CONNECTION

DWG. NO. ZW500EV-CAS-A-100
REV. R0
PART NO. –
SHEET 1 of 1

ROTARY LOBE BLOWERS
DELTA BLOWER GENERATION 5

Intake volume streams from 30 m^3/h to 15,000 m^3/h

Membrane Blowers:
Tag:
20-B-201-A/B/C/D/E



AERZEN

THE DELTA BLOWERS. ROBUST, DURABLE MACHINES FOR COUNTLESS COMPRESSOR PROCESSES.



Delta Blower Generation 5

They are the driving force behind countless processes, the heart of a powerful machine assembly: the Delta Generation 5 rotary lobe blowers. They represent the distillation of almost 150 years of AERZEN experience and development work, but are more innovative than ever. AERZEN has packed a number of new features into its latest generation of delta blowers: oil-free conveyance of air and neutral gases; a broad control range for volume streams of from 30 m^3/h to 15,000 m^3/h; reduced life-cycle costs; easy handling; quieter operation. What hasn't changed: the extremely robust, extremely reliable, and extremely durable nature of this global success story. No wonder that their owners are so enthusiastic about putting them into continuous service – year in and year out, decade after decade.


AERZEN
Delta Blower



Applications
- Water and waste water treatment
- Aeration
- Filter backwashing
- Pneumatic conveyance of bulk materials
- Gas conveyance
- Degassing
- Dust removal
- Vacuum production
- Biogas treatment

and many others

Industries
- Sewage treatment
- Chemical and process technology
- Power plants
- Cement and lime
- Foodstuffs
- Paper

and many others

THE UNIVERSAL GENIUS FOR EVERY APPLICATION.

The versatile and compact Delta Blower units can be deployed in any climate zone on Earth. In the most challenging outdoor environments just as safely as in covered indoor spaces. They can be used as both standalone units or in complex assemblies. They are as reliable in earthquake zones as they are aboard ships or in other mobile applications.

Versatility in Detail.
Delta Blowers are powerful all-round geniuses. Miniature units can be mounted on silo vehicles, the largest machines can be used in lifting units. They are used to unload ships – at up to 1,000 tons an hour.

Control range from 25% to 100%

Intake volumes streams from 30 m^3/h to 15,000 m^3/h

Positive pressure up to 1,000 mbar

Nominal widths from DN 50 to DN 400



Indispensable for power plant



Powerful performer for loading and unloading ships

MACHINES AND SERVICES FROM AERZEN. HIGHLY ACCESSIBLE AND AVAILABLE AROUND THE WORLD.

The durability of Delta Blower units is legendary. Just like their proverbial reliability, lifespan, and intelligent operating and maintenance design. Why bring up AERZEN services at all, then? Because service is necessary. And because the service teams we have on call across the globe are an important decision criterion for plant operators: a decision for blowers "made by AERZEN".



The heart of the Delta unit: the triple-lobed AERZEN blower stage

High availability.
The best blower units are the ones you don't notice. Because they do their work reliably, year in and year out. The Delta Blowers from AERZEN are just this kind of unit. There's a reason they have a reputation for robust nature and long service life: AERZEN makes all the components itself. Right down to the control system. From the initial idea through engineering to configuration. Which is how we can guarantee the productivity of our machines. Our contribution to the "made in Germany" quality designation.



A reliable partner – the world over

There for you – the world over.
Typically AERZEN: that our solutions should be so reliably available. That means our machines, of course, but also our services. Our teams will take care of your units throughout their entire operational life, thus helping to protect the value of your investment. And the fact that we have a network of over 40 affiliates and service representatives in more than 100 countries around the world means we're never far away. We can be there for you quickly – when you need us.

AERZEN: always the right choice.
- Commissioning done by qualified personnel
- Individualized training for customer's specialists
- Customer-specific service and maintenance contracts
- Delta-real time monitoring for your unit
- On-site machine modifications (if needed)

Intelligently made.
What do they mean, the terms "compact, easy handling, maintenance-friendly"? These are our promises to you for the day-to-day operation of our products, and they're worth their weight in gold. Some concrete examples:

- Small footprint
- Flexible machine mounts
- Easy to move with a fork lift or pallet truck
- Space-saving side-by-side setup
- Plug and play installation and commissioning
- Easy access to all parts subject to wear
- Oil levels can be checked while machine is in operation
- Maintenance work such as changing oil and filters done from the front of the machine
- Low noise levels
- Belt-driven for optimal volume streams; retrofitting is fast and easy

100% clean.
How can we offer machines that can be used for handling foodstuffs, without the need for extensive cleaning that would interrupt production? By eliminating absorption material in the muffler. AERZEN designed the base support to function as a discharge muffler, reducing noise by air deflection alone. 100% free of absorption material that would otherwise cause wear and contaminate downstream systems. The base supports, by the way, are AERZEN patents and are also certified as spark arresters for use in ATEX applications.



Intelligent noise reduction: the AERZEN discharge muffler with no absorption material

BLOWERS ARE BLOWERS, RIGHT? AN END TO PRECONCEPTIONS.

AERZEN is one of the world's most innovative providers of compressor technology. For over 150 years. And it was almost 150 years ago – 1868, to be exact – that we produced Europe's first rotary lobe blower. Since then we have raised the bar for each generation of this technology. Let yourself be surprised. Discover the extraordinary blowers: the Delta Blower Generation 5.

Extremely robust
- for a broad range of applications in control ranges from 25 to 100%
- many types of possible modifications

Compact design
- space-saving side-by-side setup
- smaller engine rooms

Operation-friendly, low-maintenance design
- high availability in continuous operation under difficult environmental conditions
- control and maintenance from the front of the machine

Plug&play
- pre-configured, parameterized, ready to run
- integrated service package with funnel and initial oil fill

Oil-free per Class 0
- per ISO 8573-1, TÜV certified

No absorption material
- for use in the pneumatic conveyance of bulk food items (no contamination).
- secure, energy-efficient water treatment (no deposits of absorption material on aeration plates, no clogging of filter media, no pressure losses)

Integrated power component (optional)
- frequency inverter, delta-star, direct/soft start
- intelligent AERtronic control

Smart oil system
- oil levels can be checked with the machine running
- readable from outside the machine
- oil instead of grease: bearings lubricated with oil last longer





A plus for the environment
- energy-efficient Class IE3 motors as standard equipment
- intake on the cold side of the unit
- basic unit integrated into a highly efficient machine network with rotary lobe compressors and turbo blowers from AERZEN
- retrofitting is fast and easy

Belt-tensioning hinged motor mounting plate
- fully automatic and maintenance-free belt tensioning
- no need to monitor V-belt tension
- very easy to mount or replace V-belts

Multifunctional hinged motor mounting plate and lifting jack
- safer transport
- easy, secure V-belt installation
- mobile installation (e.g. aboard ship/ in earthquake zones)
- Hinged motor mounting plate as support for heavy motors

Low noise levels
- for easy compliance with noise level regulations near populated areas and production facilities
- minimal noise levels with optimized acoustic hood
- integrated pulsation reduction process (patented AERZEN blower stage)

Approval per PDE guidelines (pressure valve)

ATEX compliant
- AERZEN base plates certified as spark extinguishers for ATEX applications

TÜV-certified zone separation filter

WANT TO KNOW MORE ABOUT WHAT'S INSIDE? DESIGN AND CONSTRUCTION.

It's good to know what all is inside each and every AERZEN Delta blower unit: The wealth of experience of a global market leader. The quality expected of a family firm with a long history of excellence. The goal of providing the best solutions for our customers. And a principle that underlies thousands and thousands of successful applications: Roots.

Innovative pulsation reduction.
AERZEN has developed a unique process especially for the Delta Blower series and integrated it into all its models: pulsation reduction. This patented AERZEN process prevents disruptions in the machine even before they arise. The triple-lobed rotors in the Delta blowers have two channels cast in the cylinder. These channels control backflow into the conveyance chamber to eliminate the blowback and crimping impulses that were typical of double-lobed blowers. A patented interference process that means an end to pulsation.

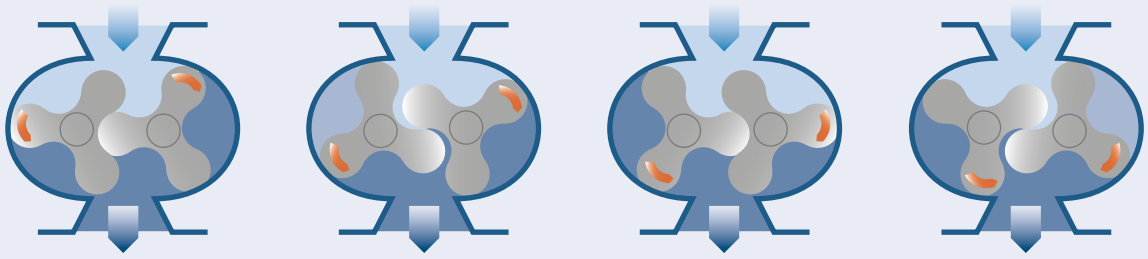

Conveyance process in AERZEN blowers

Intelligent technical details are your guarantee for the lasting value of the Delta blowers. One example from among many: the patented pulsation reduction process, an AERZEN innovation that increases the lifespan of the bearings.

The inner values are what count: a view into an AERZEN blower

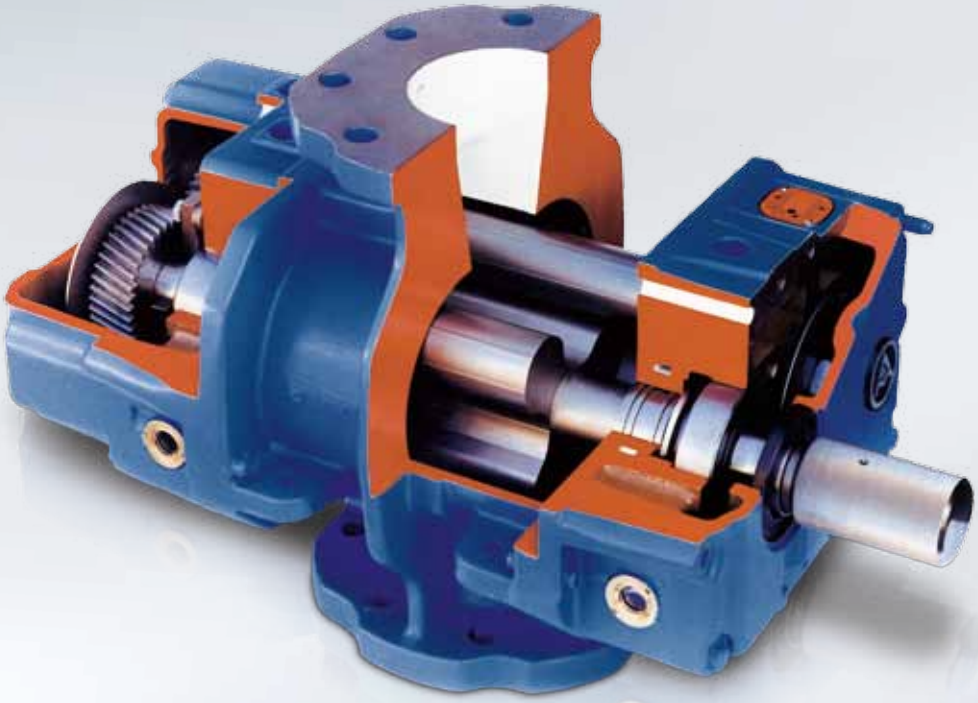

Blower stage
- Triple-lobed blower with integrated pulsation reduction
- Housing: cylinder (with two integrated, pressure-side pre-inlet channels to reduce noise through pulsation reduction), wheel well, housing lid, and side plates
- Made of EN-GJL-200
- Ribbed surface

Rotors

Models GM 3 S to GM 80 L:
- Rotors and shafts drop forged from C45N

Models GM 90 S and GM 30 L:
- Rotors and shaft drop forged from EN-GJS-500-7

Models GM 150 S to GM 240 S:
- Rotors made of EN-GJS-400-18-LT, shafts of C45N

Drive type
- Overhung via narrow V-belt
- Direct drive

Cooling
- Convection cooling

Lubrication
- Oil bath for bearings and timing gears

Oil-free conveyance
- Oil-free operation per ISO 8573-1 Class 0 is guaranteed by using proven piston ring labyrinth seals combined with neutral chambers (open to the atmosphere)

Timing gears
- Made of case-hardening steel, hardened and ground, with helical gears
- Attached to the shaft via taper interference fit
- Extremely smooth running, very long operational life

EXCEEDING STANDARDS. AERZEN DELIVERABLES.

Some do comfortable. Others do efficient. We do both. When your Delta Blower unit is delivered, it comes completely configured, parameterized, ready to plug and run. Designed especially for your processes, of course. And including all the standardized accessories and components you'll need for flawless operation at the push of a button.

The AERZEN "All-in" concept: Standard deliverables.



1 **Triple-lobe blower stage**
- with integrated pulsation reduction (see page 10/11)

2 **Base plate with integrated discharge muffler**
- Certified as ATEX spark arrester per EU guideline 1999/92/EC
- Muffler free of absorption material



3 **Intake muffler with integrated air filter**
- Normal intake from the surrounding area
- Conduit intake optional

4 **Flexible rubber bushing**
- With clamps

5 **Flexible machine mounts**
- To decouple machine-borne noise



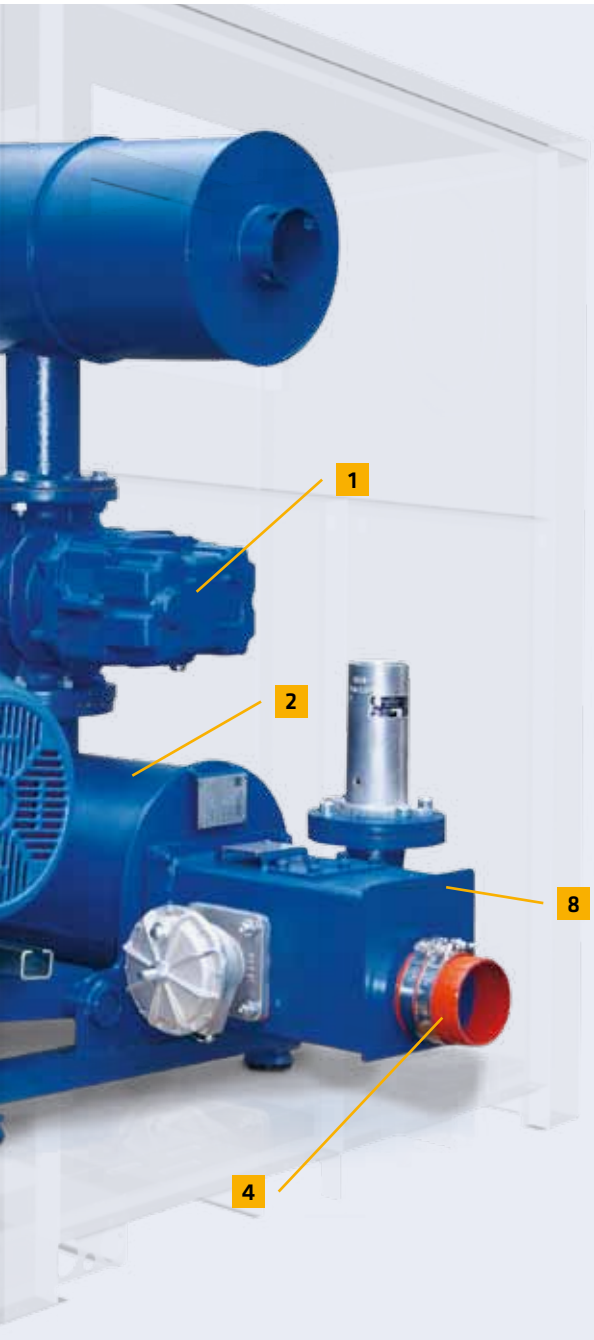



6 **Motor**

- High-performance narrow V-belt drive with three-phase AC motor
- Energy-efficient Class IE3 motors (up to motor size 315) as standard equipment



7 **Hinged motor mounting plate**

- Automatic V-belt tensioning
- Multifunctional hinged motor mounting plate and lifting jack

8 **Terminal box**

- With pressure valve (8) per PED guideline 97/23/EC
- built-in non-return flap

9 **Instrumentation**

- Pressure gauge for displaying conveying pressure
- Maintenance indicator for monitoring intake filter

Added value: Accessory components.

- Acoustic hood for indoor and outdoor installation, force-air ventilated via mechanical filter
- Startup load relief (10), needed with delta-star motor startup
- Pressure-side axial compensator in place of flexible rubber bushing
- Control cabinet: delta-star, frequency inverter, soft-starter
- AERZEN AERtronic blower control
- Additional accessories on demand



AERZEN startup load relief

Modifications.

- Special motors
- Special finishes
- ATEX-compliant design
- Acoustic hood with special sand collector for use in desert locations
- Acoustic hood for low temperatures (to -40° C) with heater and gravity-activated blinds
- Acoustic hood for earthquake safety and increased wind resistance
- For use aboard ships and in motor vehicles
- For conveying specialty gases by using specialized materials
- Customer-specific documentation



Always a safe choice: ATEX-compliant AERZEN design

Efficient control.

AERtonic is easy to use. But above all, AERZEN's control system is an important part of the unit's safety design: it guarantees that your facility will be operating at optimal efficiency levels at all times. The AERtronic offers a broad spectrum of functions. It can visualize operational data, run the operating hours counter, provide early notifications of operational events, and save all this information in memory. AERtronic will also keep you informed about upcoming maintenance and service cycles, meaning that service calls can be planned for more efficiently, helping to increase the lifespan of your machine's components significantly.



WEIGHTY ADVANTAGES. IN A LEAN MACHINE.

Dimensions and weights (Technical data subject to change – Products subject to technical alteration).

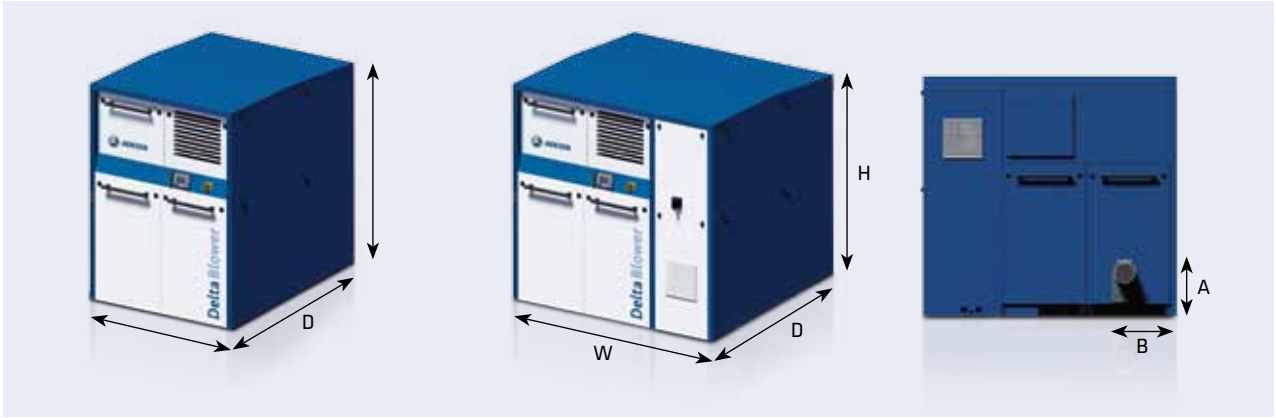

Delta Blower.

Model	H	D	W	A	B	Nozzle size DN	Weight without acoustic hood	Weight with acoustic hood
3 S	1055	800	800	228	245	50	148 kg	212 kg
4 S	1280	1135	925	258	258	80	207 kg	299 kg
7 L	1280	1135	925	258	258	80	212 kg	304 kg
10 S	1280	1135	925	258	258	80	236 kg	328 kg
10 S	1500	1350	1250	294	375	100	336 kg	496 kg
15 L	1500	1350	1250	294	375	100	351 kg	511 kg
25 S	1500	1350	1250	294	375	125	407 kg	567 kg
30 L	1900	1800	1500	356	435	150	690 kg	1020 kg
35 S	1900	1800	1500	356	435	150	780 kg	1110 kg
50 L	1900	1800	1500	356	435	150	830 kg	1160 kg
50 L	2111	2055	1700	357	525	200	905 kg	1475 kg
60 S	2111	2055	1700	357	525	200	1035 kg	1605 kg
80 L	2308	2200	1900	456	600	250	1550 kg	2200 kg
90 S	2308	2200	1900	456	600	250	1620 kg	2270 kg
130 L	2345	2850	2100	410	635	300	2436 kg	3410 kg
150 S	2345	2850	2100	410	635	300	2796 kg	3750 kg
220 L	3500	4304	2800	410	800	400	4981 kg	8240 kg
240 S	3500	4304	2800	410	800	400	5371 kg	8630 kg

Weights without motor and belt drive

Delta Blower with integrated power supply.

Model	H	D	W	A	B	Nozzle size DN	Weight with acoustic hood
10 S	1500	1350	1850	294	375	100	619 kg
15 L	1500	1350	1850	294	375	100	661 kg
25 S	1500	1350	1850	294	375	125	717 kg
30 L	1900	1800	2100	356	435	150	1322 kg
35 S	1900	1800	2100	356	435	150	1412 kg
50 L	1900	1800	2100	356	435	150	1462 kg
50 L	2111	2055	2300	357	525	200	1825 kg
60 L	2111	2055	2300	357	525	200	1955 kg

Weights without motor, electrical equipment, and belt drive

BLOWER POWER IN DETAIL. THE PERFORMANCE TABLES.

The Delta rotary lobe blowers are high-performance products. They were designed for use in many different areas of application: 16 models in 9 nominal widths from DN 50 to DN 400, intake volume streams from about 30 to 15,000 m^3/h, positive pressures up to 1,000 mbar, negative pressures down to -500 mbar.

Noise values.
The sound pressure levels from machine noise (Lp(A)) per individual unit are based measurements taken outdoors at a distance of 1 M from the exterior of the machine (tolerance of ± 2 dB). Noise measurement per DIN 45 635, DIN ISO 3744 and DIN EN ISO 2151.

Using the performance tables.
You will find all the important performance data for the Delta series in the performance tables: intake volume stream ($\dot{V}1$), required coupling power (Pk), motor size and noise level (Lp(A)). The intake volumes shown are based on commonly available belt drive ratios in increments of about 12%. Lower drive speeds are also possible, depending on the final temperature.

Parameters.

$\dot{V}1$	[m^3/min]	Intake volume stream
p1	[bar abs]	Intake pressure
Δp	[mbar]	Pressure differential
t_1	[°C]	Intake temperature
t_2	[°C]	Final temperature
nG	[rpm]	Blower rotational speed
nM	[rpm]	Motor rotational speed
Pk	[kW]	Shaft power
P_{mot}	[kW]	Nominal motor power
Lp(A) o. H.	[dB]	Noise pressure level for blower unit without hood
Lp(A) m. H.	[dB]	Noise pressure level for blower unit with hood

Delta Blower is the driving force in countless processes. There is a good reason for the exceptional range of applications: the robust power units from AERZEN can be configured for just about any requirement, even in standard implementations.

Δp mbar	Blower size		GM 3 S / DN 50										GM 4 S / DN 80								
300	$\dot{V}_1$	[m³/min]	**0.66**	**1.1**	**1.61**	**2.13**	**2.48**	**2.94**	**3.18**	**3.66**	**3.87**	**4.12**	**1.01**	**1.66**	**2.17**	**3**	**3.54**	**4.16**	**4.78**	**5.41**	**5.7**
	t_2	[°C]	74	62	57	54	53	52	51	50	50	50	68	59	56	53	52	51	50	49	49
	nG	[rpm]	1400	1830	2330	2840	3190	3640	3880	4350	4560	4800	1400	1870	2240	2840	3230	3680	4130	4590	4800
	nM	[rpm]	2800	2800	2800	2840	2840	2840	2870	2870	2870	2890	2800	2800	2840	2840	2870	2870	2890	2890	2890
	Pk	[kW]	0.89	1.14	1.43	1.76	2.01	2.34	2.54	2.94	3.13	3.37	1.14	1.49	1.78	2.29	2.64	3.06	3.52	4.01	4.25
	P_{mot}	[kW]	1.5	1.5	2.2	3	3	3	4	4	4	5.5	1.5	2.2	3	3	4	4	5.5	5.5	5.5
	Motor size		90 S	90 S	90 L	100 L	100 L	100 L	112 M	112 M	112 M	132 S	90 S	90 L	100 L	100 L	112 M	112 M	132 S	132 S	132 S
	Lp(A)[dB]	w/o.H./w.H.	78/<65	80/<65	83/66	87/66	87/66	89/66	90/67	92/67	93/67	93/66	77/<65	78/<65	79/<65	79/<65	84/<65	86/<65	87/<65	88/<65	89/<65
400	$\dot{V}_1$	[m³/min]	**0.55**	**0.98**	**1.53**	**2.01**	**2.4**	**2.86**	**3.07**	**3.57**	**3.79**	**4**	**0.87**	**1.5**	**2.21**	**2.9**	**3.42**	**4.06**	**4.64**	**5.27**	**5.56**
	t_2	[°C]	107	83	73	68	66	64	63	62	61	61	94	77	70	66	64	62	61	60	60
	nG	[rpm]	1400	1830	2370	2840	3220	3680	3880	4380	4590	4800	1400	1860	2370	2870	3250	3710	4130	4590	4800
	nM	[rpm]	2800	2800	2840	2840	2870	2870	2870	2890	2890	2890	2800	2840	2840	2870	2890	2890	2890	2890	2890
	Pk	[kW]	1.13	1.45	1.86	2.24	2.57	3	3.19	3.71	3.94	4.18	1.46	1.91	2.43	2.97	3.4	3.94	4.47	5.07	5.35
	P_{mot}	[kW]	1.5	2.2	3	3	4	4	4	5.5	5.5	5.5	2.2	3	3	4	5.5	5.5	5.5	7.5	7.5
	Motor size		90 S	90 L	100 L	100 L	112 M	112 M	112 M	132 S	132 S	132 S	90 L	100 L	100 L	112 M	132 S	132 S	132 S	132 S	132 S
	Lp(A)[dB]	w/o.H./w.H.	80/<65	81/<65	84/66	87/66	87/67	90/67	91/67	93/67	94/67	94/67	77/<65	79/<65	81/<65	83/<65	85/<65	87/<65	88/<65	89/<65	89/<65
500	$\dot{V}_1$	[m³/min]		**0.91**	**1.43**	**1.94**	**2.29**	**2.78**	**3.04**	**3.47**	**3.68**	**3.9**	**0.77**	**1.42**	**2.11**	**2.8**	**3.3**	**3.93**	**4.51**	**5.14**	**5.43**
	t_2	[°C]		107	91	83	80	77	75	74	73	72	126	97	85	80	77	75	73	72	71
	nG	[rpm]		1860	2370	2870	3220	3700	3960	4380	4590	4800	1420	1890	2390	2890	3250	3710	4130	4590	4800
	nM	[rpm]		2840	2840	2870	2870	2890	2890	2890	2890	2890	2840	2840	2870	2890	2890	2890	2890	2890	2890
	Pk	[kW]		1.78	2.26	2.76	3.12	3.64	3.94	4.45	4.72	4.99	1.81	2.38	3	3.66	4.15	4.8	5.42	6.12	6.45
	P_{mot}	[kW]		3	3	4	4	5.5	5.5	5.5	7.5	7.5	3	3	4	5.5	5.5	7.5	7.5	7.5	7.5
	Motor size			100 L	100 L	112 M	112 M	132 S	132 S	132 S	132 S	132 S	100 L	100 L	112 M	132 S	132 S	132 S	132 S	132 S	132 S
	Lp(A)[dB]	w/o.H./w.H.		83/65	85/66	88/67	88/67	91/68	93/68	95/67	95/67	95/68	77/<65	80/<65	82/<65	85/66	87/65	88/<65	90/<65	89/<65	89/66
600	$\dot{V}_1$	[m³/min]			**1.36**	**1.84**	**2.26**	**2.69**	**2.95**	**3.38**	**3.59**	**3.8**		**1.33**	**2.02**	**2.69**	**3.39**	**3.82**	**4.4**	**5.11**	**5.32**
	t_2	[°C]			110	99	94	90	88	86	85	84		119	103	95	90	87	85	83	83
	nG	[rpm]			2390	2870	3280	3700	3960	4380	4590	4800		1910	2410	2890	3400	3710	4130	4650	4800
	nM	[rpm]			2870	2870	2890	2890	2890	2890	2890	2890		2870	2890	2890	2890	2890	2890	2930	2930
	Pk	[kW]			2.69	3.24	3.74	4.27	4.61	5.19	5.49	5.8		2.84	3.58	4.32	5.14	5.65	6.37	7.29	7.56
	P_{mot}	[kW]			4	4	5.5	5.5	7.5	7.5	7.5	7.5		4	5.5	5.5	7.5	7.5	7.5	11	11
	Motor size				112 M	112 M	132 S	132 S	132 S	132 S	132 S	132 S		112 M	132 S	132 S	132 S	132 S	132 S	160 M	160 M
	Lp(A)[dB]	w/o.H./w.H.			87/66	89/67	89/68	92/68	95/68	96/68	96/68	96/68		81/<65	84/<65	87/68	87/67	88/66	91/66	89/66	89/67
700	$\dot{V}_1$	[m³/min]			**1.27**	**1.78**	**2.17**	**2.6**	**2.86**	**3.29**	**3.5**	**3.72**			**1.92**	**2.58**	**3.28**	**3.71**	**4.37**	**5.01**	**5.22**
	t_2	[°C]			132	117	110	105	102	99	98	97			122	111	104	101	97	95	94
	nG	[rpm]			2390	2890	3280	3700	3960	4380	4590	4800			2410	2890	3400	3710	4190	4650	4800
	nM	[rpm]			2870	2890	2890	2890	2890	2890	2890	2890			2890	2890	2890	2890	2930	2930	2930
	Pk	[kW]			3.09	3.76	4.29	4.9	5.28	5.93	6.27	6.62			4.14	4.99	5.92	6.5	7.43	8.35	8.66
	P_{mot}	[kW]			4	5.5	5.5	7.5	7.5	7.5	7.5	7.5			5.5	7.5	7.5	7.5	11	11	11
	Motor size				112 M	132 S	132 S	132 S	132 S	132 S	132 S	132 S			132 S	132 S	132 S	132 S	160 M	160 M	160 M
	Lp(A)[dB]	w/o.H./w.H.			87/67	90/67	90/68	93/69	94/69	95/69	95/69	96/68			85/<6	89/68	86/68	89/67	93/67	90/68	89/69
800	$\dot{V}_1$	[m³/min]					**2.1**	**2.52**	**2.78**	**3.21**						**2.48**	**3.26**	**3.68**	**4.28**	**4.91**	**5.12**
	t_2	[°C]					126	120	117	113						128	118	114	111	107	107
	nG	[rpm]					3290	3700	3960	4380						2890	3450	3760	4190	4650	4800
	nM	[rpm]					2890	2890	2890	2890						2890	2930	2930	2930	2930	2930
	Pk	[kW]					4.86	5.52	5.95	6.68						5.65	6.81	7.46	8.4	9.42	9.77
	P_{mot}	[kW]					7.5	7.5	7.5	7.5						7.5	11	11	11	11	11
	Motor size						132 S	132 S	132 S	132 S						132 S	160 M	160 M	160 M	160 M	160 M
	Lp(A)[dB]	w/o.H./w.H.					91/68	94/69	93/69	94/70							87/68	91/68	95/68	91/70	90/70
900	$\dot{V}_1$	[m³/min]							**2.71**								**3.17**	**3.59**	**4.19**	**4.82**	**5.03**
	t_2	[°C]							132								133	129	124	120	119
	nG	[rpm]							3960								3450	3760	4190	4650	4800
	nM	[rpm]							2890								2930	2930	2930	2930	2930
	Pk	[kW]							6.63								7.6	8.33	9.36	10.5	10.9
	P_{mot}	[kW]							7.5								11	11	11	15	15
	Motor size								132 S								160 M	160 M	160 M	160 M	160 M
	Lp(A)[dB]	w/o.H./w.H.							94/70								88/69	92/69	96/69	92/70	92/70
1000	$\dot{V}_1$	[m³/min]																		**4.74**	**4.94**
	t_2	[°C]																		133	132
	nG	[rpm]																		4650	4800
	nM	[rpm]																		2930	2930
	Pk	[kW]																		11.6	12
	P_{mot}	[kW]																		15	15
	Motor size																			160 M	160 M
	Lp(A)[dB]	w/o.H./w.H.																		94/70	94/70

Lower differential pressures on request. Performance data are non-binding examples only.

Δp mbar	Blower size		GM 7 L / DN 80									GM 10 S / DN 80						GM 10 S / DN 100		
300	$\dot{V}_1$	[m³/min]	1.54	2.56	3.59	4.63	5.35	6.35	7.19	7.71	8.21	2.59	3.96	5.36	6.7	7.68	9.03	10.3	11	11.6
	t_2	[°C]	67	58	55	52	51	50	50	50	49	59	54	52	50	50	49	48	48	48
	nG	[rpm]	1400	1890	2390	2890	3240	3720	4130	4380	4620	1420	1910	2410	2890	3240	3720	4190	4440	4650
	nM	[rpm]	2800	2840	2870	2890	2890	2890	2890	2890	2890	2840	2870	2890	2890	2890	2890	2930	2930	2930
	Pk	[kW]	1.64	2.19	2.78	3.42	3.89	4.59	5.25	5.67	6.1	2.29	3.06	3.88	4.72	5.37	6.36	7.43	8.05	8.61
	P_{mot}	[kW]	2.2	3	4	5.5	5.5	7.5	7.5	7.5	7.5	3	4	5.5	7.5	7.5	7.5	11	11	11
	Motor size		90 L	100 L	112 M	132 S	132 S	132 S	132 S	132 S	132 S	100 L	112 M	132 S	132 S	132 S	132 S	160 M	160 M	160 M
	Lp(A)[dB]	w/o.H./w.H.	80/<65	82/<65	83/<65	85/68	85/67	88/66	89/66	89/<65	89/66	76/<65	78/69	80/66	82/65	84/65	86/66	91/71	91/71	92/71
400	$\dot{V}_1$	[m³/min]	1.38	2.39	3.42	4.42	5.14	6.14	7.11	7.63	8.14	2.41	3.8	5.14	6.49	7.58	8.95	10.1	10.8	11.4
	t_2	[°C]	92	75	69	65	64	62	61	60	60	76	68	64	62	61	59	59	58	58
	nG	[rpm]	1420	1910	2410	2890	3240	3720	4190	4440	4690	1435	1930	2410	2890	3280	3770	4190	4440	4650
	nM	[rpm]	2840	2870	2890	2890	2890	2890	2930	2930	2930	2870	2890	2890	2890	2930	2930	2930	2930	2930
	Pk	[kW]	2.16	2.87	3.64	4.41	5.01	5.88	6.79	7.31	7.85	2.99	3.99	5	6.07	6.98	8.23	9.39	10.1	10.8
	P_{mot}	[kW]	3	4	5.5	5.5	7.5	7.5	11	11	11	4	5.5	7.5	7.5	11	11	11	15	15
	Motor size		100 L	112 M	132 S	132 S	132 S	132 S	160M	160M	160M	112 M	132 S	132 S	132 S	160 M	160 M	160 M	160 M	160 M
	Lp(A)[dB]	w/o.H./w.H.	80/<65	82/<65	84/<65	86/68	86/68	89/67	90/67	90/67	91/68	77/<65	78/70	80/67	83/66	84/66	87/67	91/70	92/71	93/70
500	$\dot{V}_1$	[m³/min]	1.22	2.18	3.24	4.23	5.31	6.05	6.92	7.44	7.96	2.25	3.61	4.95	6.41	7.39	8.76	9.94	10.6	11.2
	t_2	[°C]	122	95	84	79	76	74	72	72	71	95	83	77	74	72	70	69	69	69
	nG	[rpm]	1435	1900	2410	2890	3410	3770	4190	4440	4690	1445	1930	2410	2930	3280	3770	4190	4440	4650
	nM	[rpm]	2870	2890	2890	2890	2890	2930	2930	2930	2930	2890	2890	2890	2930	2930	2930	2930	2930	2930
	Pk	[kW]	2.67	3.51	4.47	5.41	6.49	7.27	8.24	8.84	9.46	3.68	4.89	6.13	7.52	8.51	9.99	11.3	12.2	12.9
	P_{mot}	[kW]	4	5.5	5.5	7.5	7.5	11	11	11	11	5.5	7.5	7.5	11	11	15	15	15	15
	Motor size		112 M	132 S	132 S	132 S	132 S	160M	160M	160M	160M	132 S	132 S	132 S	160 M	160 M	160 M	160 M	160 M	160 M
	Lp(A)[dB]	w/o.H./w.H.	80/<65	82/<65	84/<65	87/68	89/68	90/68	91/68	91/69	92/70	77/<65	78/70	80/67	83/66	84/67	87/68	88/67	92/70	93/70
600	$\dot{V}_1$	[m³/min]		2.08	3.07	4.07	4.87	5.89	6.76	7.27	7.79	2.08	3.44	4.5	6.24	7.22	8.59	9.76	10.5	11.1
	t_2	[°C]		116	102	94	90	87	84	83	83	118	99	92	86	84	82	80	80	79
	nG	[rpm]		1930	2410	2890	3280	3770	4190	4440	4690	1445	1930	2310	2930	3280	3770	4190	4440	4650
	nM	[rpm]		2890	2890	2890	2930	2930	2930	2930	2930	2890	2890	2930	2930	2930	2930	2930	2930	2930
	Pk	[kW]		4.24	5.3	6.41	7.34	8.57	9.68	10.4	11.1	4.35	5.8	6.94	8.89	10	11.7	13.3	14.3	15.1
	P_{mot}	[kW]		5.5	7.5	7.5	11	11	11	15	15	5.5	7.5	11	11	15	15	15	18.5	18.5
	Motor size			132 S	132 S	132 S	160M	160M	160M	160 M	160 M	132 S	132 S	160 M	160 M	160 M	160 M	160 M	160 L	160 L
	Lp(A)[dB]	w/o.H./w.H.		84/<65	86/66	88/68	89/68	91/68	91/69	92/69	92/70	77/<65	78/71	80/68	84/67	85/68	87/69	88/68	92/70	94/70
700	$\dot{V}_1$	[m³/min]			2.92	4.00	4.72	5.71	6.60	7.12	7.64		3.28	4.34	6.08	7.06	8.43	9.61	10.3	10.9
	t_2	[°C]			120	109	104	100	97	96	94		117	107	99	96	93	92	91	90
	nG	[rpm]			2410	2930	3280	3760	4190	4440	4690		1930	2310	2930	3280	3770	4190	4440	4650
	nM	[rpm]			2890	2930	2930	2930	2930	2930	2930		2890	2930	2930	2930	2930	2930	2930	2930
	Pk	[kW]			6.13	7.51	8.47	9.84	11.1	11.9	12.7		6.7	8.02	10.3	11.6	13.5	15.3	16.3	17.3
	P_{mot}	[kW]			7.5	11	11	11	15	15	15		7.5	11	15	15	18.5	18.5	18.5	22
	Motor size				132 S	160M	160M	160M	160 M	160 M	160 M		132 S	160 M	160 M	160 M	160 L	160 L	160 L	180 M
	Lp(A)[dB]	w/o.H./w.H.			88/67	89/68	90/68	92/69	92/70	92/70	92/70		79/71	80/69	84/67	84/68	88/69	89/69	92/68	94/69
800	$\dot{V}_1$	[m³/min]												4.2	5.93	6.91	7.98	9.46	10.2	10.7
	t_2	[°C]												123	113	109	106	103	102	101
	nG	[rpm]												2310	2930	3280	3660	4190	4440	4650
	nM	[rpm]												2930	2930	2930	2930	2930	2930	2930
	Pk	[kW]												9.1	11.6	13.1	14.8	17.2	18.4	19.5
	P_{mot}	[kW]												11	15	15	18.5	22	22	22
	Motor size													160 M	160 M	160 M	160 L	180 M	180 M	180 M
	Lp(A)[dB]	w/o.H./w.H.												81/69	84/67	85/69	87/60	90/70	92/67	93/68
900	$\dot{V}_1$	[m³/min]														6.77	7.84	9.32	10.1	10.7
	t_2	[°C]														122	118	115	113	112
	nG	[rpm]														3280	3660	4190	4460	4680
	nM	[rpm]														2930	2930	2930	2945	2945
	Pk	[kW]														14.6	16.5	19.2	20.6	21.8
	P_{mot}	[kW]														18.5	18.5	22	30	30
	Motor size															160 L	160 L	180 M	200 L	200 L
	Lp(A)[dB]	w/o.H./w.H.														85/69	88/70	89/70	92/69	93/69
1000	$\dot{V}_1$	[m³/min]															7.71	8.72	9.95	10.6
	t_2	[°C]															131	128	125	124
	nG	[rpm]															3660	4020	4460	4680
	nM	[rpm]															2930	2945	2945	2945
	Pk	[kW]															18.2	20.2	22.7	24
	P_{mot}	[kW]															22	30	30	30
	Motor size																180 M	200 L	200 L	200 L
	Lp(A)[dB]	w/o.H./w.H.															89/70	89/70	92/70	93/72

Lower differential pressures on request. GM 10 S from 10 m³/min - accessories DN 100. Performance data are non-binding examples only.

Δp mbar	Blower size		GM 15 L / DN 100									GM 25 S / DN 125								
300	$\dot{V}_1$	[m³/min]	3.95	5.84	7.99	10.1	11.6	13.6	15.4	16.4	17.3	6.18	8.69	11.1	14.5	16.6	18.7	20.6	22.7	24.2
	t_2	[°C]	58	54	51	50	49	49	48	48	48	53	51	50	48	48	48	47	47	47
	nG	[rpm]	1435	1890	2410	2930	3290	3760	4190	4440	4650	1445	1890	2310	2930	3290	3660	4010	4370	4650
	nM	[rpm]	2870	2890	2890	2930	2930	2930	2930	2930	2930	2890	2890	2930	2930	2930	2930	2930	2930	2930
	Pk	[kW]	3.26	4.34	5.64	7.04	8.07	9.52	10.9	11.8	12.6	4.46	5.86	7.3	9.64	11.1	12.8	14.4	16.2	17.7
	P_{mot}	[kW]	4	5.5	7.5	11	11	11	15	15	15	5.5	7.5	11	11	15	15	18.5	18.5	22
	Motor size		112 M	132 S	132 S	160 M	160 M	160 M	160 M	160 M	160 M	132 S	132 S	160 M	160 M	160 M	160 M	160 L	160 L	180 M
	Lp(A)[dB]	w/o.H./w.H.	83/69	84/<65	86/<65	88/<65	87/65	89/66	91/67	91/68	91/69	81/66	85/66	87/70	92/69	92/69	93/69	92/69	94/71	96/72
400	$\dot{V}_1$	[m³/min]	3.69	5.53	7.27	9.84	11.3	13.3	15.1	16.1	17	5.88	8.56	10.8	14.2	16.3	18.4	20.3	22.5	24.1
	t_2	[°C]	74	67	64	61	60	59	59	58	58	66	62	60	59	58	58	57	57	57
	nG	[rpm]	1445	1890	2310	2930	3290	3760	4190	4440	4650	1445	1920	2310	2930	3290	3660	4010	4400	4680
	nM	[rpm]	2890	2890	2930	2930	2930	2930	2930	2930	2930	2890	2930	2930	2930	2930	2930	2930	2945	2950
	Pk	[kW]	4.28	5.64	6.97	9.06	10.3	12.1	13.8	14.9	15.8	5.82	7.76	9.47	12.4	14.2	16.2	18.2	20.5	22.2
	P_{mot}	[kW]	5.5	7.5	11	11	15	15	18.5	18.5	18.5	7.5	11	11	15	18.5	18.5	22	30	30
	Motor size		132 S	132 S	160 M	160 M	160 M	160 M	160 L	160 L	160 L	132 S	160 M	160 M	160 M	160 L	160 L	180 M	200 L	200 L
	Lp(A)[dB]	w/o.H./w.H.	83/68	85/<65	86/<65	88/<65	87/<65	88/67	92/67	92/69	94/71	83/67	86/67	87/71	92/69	93/69	93/70	93/70	95/71	98/72
500	$\dot{V}_1$	[m³/min]	3.42	5.38	7	9.57	11.1	12.6	14	15.8	16.7	5.73	8.29	10.5	14	16	18.1	20.2	22.3	23.8
	t_2	[°C]	93	82	77	73	72	70	69	69	68	80	75	72	69	68	68	67	67	66
	nG	[rpm]	1445	1920	2310	2930	3290	3660	4010	4440	4650	1465	1920	2310	2930	3290	3660	4030	4400	4680
	nM	[rpm]	2890	2930	2930	2930	2930	2930	2930	2930	2930	2930	2930	2930	2930	2930	2930	2945	2945	2950
	Pk	[kW]	5.28	7.06	8.57	11.1	12.6	14.3	15.9	18	19	7.27	9.56	11.6	15.1	17.3	19.6	22.1	24.6	26.6
	P_{mot}	[kW]	7.5	11	11	15	15	18.5	18.5	22	22	11	11	15	18.5	22	22	30	30	30
	Motor size		132 S	160 M	160 M	160 M	160 M	160 L	160 L	180 M	180 M	160 M	160 M	160 M	160 L	180 M	180 M	200 L	200 L	200 L
	Lp(A)[dB]	w/o.H./w.H.	84/67	87/<65	88/<65	90/<65	88/<65	88/67	91/68	94/70	96/72	85/67	88/68	88/71	93/69	93/70	94/71	94/71	97/72	99/72
600	$\dot{V}_1$	[m³/min]	3.17	5.14	6.75	9.32	10.8	12.3	14.5	15.7	16.6	5.49	8.05	10.2	13.7	15.9	18	19.9	22	23.6
	t_2	[°C]	115	98	91	85	83	82	80	79	79	95	87	84	80	79	78	77	77	76
	nG	[rpm]	1445	1920	2310	2930	3290	3660	4190	4460	4680	1465	1920	2310	2930	3310	3680	4030	4400	4680
	nM	[rpm]	2890	2930	2930	2930	2930	2930	2930	2945	2945	2930	2930	2930	2930	2945	2945	2945	2950	2950
	Pk	[kW]	6.28	8.38	10.2	13.1	14.9	16.8	19.6	21.1	22.4	8.65	11.4	13.8	17.9	20.5	23.2	25.8	28.7	31
	P_{mot}	[kW]	7.5	11	15	15	18.5	22	22	30	30	11	15	18.5	22	30	30	30	37	37
	Motor size		132 S	160 M	160 M	160 M	160 L	180 M	180 M	200 L	200 L	160 M	160 M	160 L	180 M	200 L	200 L	200 L	200 L	200 L
	Lp(A)[dB]	w/o.H./w.H.	86/68	88/<65	88/<65	89/<65	88/66	88/68	92/68	95/70	97/72	86/69	89/69	89/71	93/70	94/71	95/72	96/72	98/72	100/73
700	$\dot{V}_1$	[m³/min]		4.91	6.53	9.1	10.6	12.1	13.6	15.4	16.3	5.27	7.83	10	13.6	15.7	17.7	20.1	21.8	23.3
	t_2	[°C]		115	106	98	95	93	92	90	89	112	101	96	91	90	88	87	87	86
	nG	[rpm]		1920	2310	2930	3290	3660	4030	4460	4680	1465	1920	2310	2945	3310	3680	4100	4400	4670
	nM	[rpm]		2930	2930	2930	2930	2930	2945	2945	2945	2930	2930	2930	2945	2945	2945	2950	2950	2940
	Pk	[kW]		9.71	11.8	15.1	17.2	19.3	21.5	24.2	25.6	10	13.2	16	20.8	23.6	26.7	30.2	32.9	35.3
	P_{mot}	[kW]		11	15	18.5	22	22	30	30	30	15	15	18.5	30	30	30	37	37	45
	Motor size			160 M	160 M	160 L	180 M	180 M	200 L	200 L	200 L	160 M	160 M	160 L	200 L	200 L	200 L	200 L	200 L	225 M
	Lp(A)[dB]	w/o.H./w.H.		88/<65	88/<65	89/<65	89/67	89/70	90/68	96/70	99/72	87/69	90/69	91/72	93/70	94/70	96/71	97/71	98/72	100/73
800	$\dot{V}_1$	[m³/min]										5.06	7.68	9.8	13.4	15.4	17.6	19.8	21.5	23.1
	t_2	[°C]										129	115	109	103	101	99	98	97	96
	nG	[rpm]										1465	1930	2310	2945	3310	3690	4080	4390	4670
	nM	[rpm]										2930	2930	2930	2945	2945	2950	2940	2940	2940
	Pk	[kW]										11.4	15	18.1	23.5	26.7	30.2	33.9	36.9	39.7
	P_{mot}	[kW]										15	18.5	22	30	30	37	45	45	45
	Motor size											160 M	160 L	180 M	200 L	200 L	200 L	225 M	225 M	225 M
	Lp(A)[dB]	w/o.H./w.H.										88/70	91/70	92/73	94/71	95/70	96/70	97/70	99/71	101/73
900	$\dot{V}_1$	[m³/min]											7.49	9.68	13.2	15.3	17.3	19.6	21.4	23
	t_2	[°C]											129	122	115	112	110	108	107	106
	nG	[rpm]											1930	2320	2945	3320	3680	4080	4410	4690
	nM	[rpm]											2930	2945	2945	2950	2950	2940	2960	2960
	Pk	[kW]											16.9	20.4	26.3	30	33.6	37.7	41.2	44.3
	P_{mot}	[kW]											22	30	30	37	37	45	55	55
	Motor size												180 M	200 L	200 L	200 L	200 L	225 M	250 M	250 M
	Lp(A)[dB]	w/o.H./w.H.											92/70	94/73	95/71	96/71	97/71	97/72	99/72	101/73
1000	$\dot{V}_1$	[m³/min]													13	15.1	17.2	19.5	21.3	22.8
	t_2	[°C]													127	123	121	119	118	117
	nG	[rpm]													2950	3320	3680	4100	4410	4690
	nM	[rpm]													2950	2950	2940	2960	2960	2960
	Pk	[kW]													29.1	33.1	37	41.8	45.4	48.7
	P_{mot}	[kW]													37	37	45	55	55	55
	Motor size														200 L	200 L	225 M	250 M	250 M	250 M
	Lp(A)[dB]	w/o.H./w.H.													97/71	97/71	98/72	98/73	100/73	102/73

Lower differential pressures on request. Performance data are non-binding examples only.

Δp mbar	Blower size		GM 30 L / DN 150									GM 35 S / DN 150							
300	$\dot{V}_1$	[m³/min]	**8.68**	**11.7**	**15.6**	**20.5**	**23.3**	**26.3**	**29.2**	**32.7**	**34.7**	**14**	**18.2**	**23.6**	**27.1**	**30.6**	**34.6**	**38.8**	**40.3**
	t_2	[°C]	53	51	50	49	48	48	48	47	47	50	49	48	48	47	47	47	47
	nG	[rpm]	1445	1830	2310	2930	3280	3660	4020	4460	4710	1490	1860	2330	2640	2945	3300	3670	3800
	nM	[rpm]	2890	2930	2930	2930	2930	2930	2945	2945	2945	2930	2930	2930	2930	2945	2945	2950	2950
	Pk	[kW]	6.38	8.13	10.5	13.7	15.7	17.9	20.2	23.1	24.8	9.56	12.2	15.8	18.4	21.2	24.9	29.1	30.7
	P_{mot}	[kW]	7.5	11	15	18.5	18.5	22	30	30	30	11	15	18.5	22	30	30	37	37
	Motor size		132 S	160 M	160 M	160 M	160 L	180 M	200 L	200 L	200 L	160 M	160 M	160 L	180 M	200 L	200 L	200 L	200 L
	Lp(A)[dB]	w/o.H./w.H.	84/71	86/70	88/73	91/72	93/73	95/74	96/74	97/74	97/75	86/67	90/68	92/72	92/71	91/71	92/71	96/71	99/71
400	$\dot{V}_1$	[m³/min]	**8.41**	**12**	**15.1**	**20.1**	**23**	**26**	**28.7**	**32.3**	**34.3**	**13.6**	**17.8**	**23.2**	**26.4**	**30.1**	**34.2**	**38.2**	**39.8**
	t_2	[°C]	66	63	61	59	58	58	57	57	57	62	60	58	58	57	57	56	56
	nG	[rpm]	1465	1920	2310	2930	3300	3680	4020	4470	4720	1490	1860	2340	2620	2945	3300	3660	3800
	nM	[rpm]	2930	2930	2930	2930	2945	2945	2945	2950	2950	2930	2930	2945	2945	2945	2950	2940	2940
	Pk	[kW]	8.41	11.1	13.5	17.6	20.2	22.9	25.5	29.1	31.2	12.4	15.7	20.3	23.2	26.8	31.1	35.9	37.9
	P_{mot}	[kW]	11	15	18.5	22	30	30	30	37	37	15	18.5	30	30	30	37	45	45
	Motor size		160 M	160 M	160 L	180 M	200 L	200 L	200 L	200 L	200 L	160 M	160 L	200 L	200 L	200 L	200 L	225 M	225 M
	Lp(A)[dB]	w/o.H./w.H.	85/71	88/71	89/74	91/72	93/72	95/73	96/73	98/74	99/75	87/68	90/69	93/73	92/72	92/71	94/71	97/72	99/72
500	$\dot{V}_1$	[m³/min]	**8.02**	**11.7**	**14.7**	**19.8**	**22.6**	**25.7**	**28.4**	**31.3**	**33.8**	**12.9**	**17.4**	**22.9**	**26**	**29.8**	**33.6**	**38.1**	**39.4**
	t_2	[°C]	81	75	72	70	69	68	67	67	66	74	71	69	68	67	66	66	66
	nG	[rpm]	1465	1930	2310	2945	3300	3690	4020	4390	4700	1465	1860	2340	2620	2950	3290	3680	3800
	nM	[rpm]	2930	2930	2930	2945	2945	2950	2950	2940	2940	2930	2930	2945	2950	2950	2940	2955	2955
	Pk	[kW]	10.4	13.7	16.6	21.6	24.6	27.9	30.9	34.3	37.2	14.9	19.2	24.7	28.2	32.5	37.2	43.2	45.1
	P_{mot}	[kW]	15	18.5	22	30	30	37	37	45	45	18.5	22	30	37	37	45	55	55
	Motor size		160 M	160 L	180 M	200 L	200 L	200 L	200 L	225 M	225 M	160 L	180 M	200 L	200 L	200 L	225 M	250 M	250 M
	Lp(A)[dB]	w/o.H./w.H.	86/72	90/72	90/75	91/73	93/72	95/72	97/72	99/73	100/75	87/69	91/70	94/73	93/72	93/72	97/72	98/73	100/73
600	$\dot{V}_1$	[m³/min]	**7.68**	**10.6**	**14.6**	**19.5**	**22.3**	**25.4**	**28.5**	**31**	**33.7**	**12.6**	**16.8**	**22.5**	**25.7**	**29.3**	**33.5**	**37.9**	**39.1**
	t_2	[°C]	96	89	84	81	79	78	77	77	76	87	82	79	78	77	76	76	75
	nG	[rpm]	1465	1830	2330	2945	3300	3690	4080	4390	4730	1465	1840	2340	2620	2940	3310	3700	3800
	nM	[rpm]	2930	2930	2950	2945	2950	2950	2940	2940	2960	2930	2945	2950	2950	2940	2955	2970	2970
	Pk	[kW]	12.3	15.4	19.8	25.5	28.9	32.8	36.8	40.1	43.8	17.7	22.5	29.2	33.1	37.9	43.8	50.5	52.3
	P_{mot}	[kW]	15	18.5	30	30	37	37	45	45	55	22	30	37	37	45	55	75	75
	Motor size		160 M	160 L	200 L	200 L	200 L	200 L	225 M	225 M	250 M	180 M	200 L	200 L	200 L	225 M	250 M	280 S	280 S
	Lp(A)[dB]	w/o.H./w.H.	86/72	88/72	90/75	92/73	94/73	97/73	99/74	99/74	100/75	88/71	91/70	95/73	94/72	93/72	99/73	99/74	100/74
700	$\dot{V}_1$	[m³/min]	**7.36**	**10.3**	**14.2**	**19.2**	**22**	**24.8**	**28.3**	**30.8**	**33.6**	**12.3**	**16.5**	**22.2**	**25.7**	**29.2**	**33.4**	**37.6**	**38.8**
	t_2	[°C]	113	103	96	92	90	89	87	87	86	100	94	90	89	87	86	85	85
	nG	[rpm]	1465	1830	2330	2950	3300	3660	4100	4410	4760	1475	1840	2340	2650	2955	3330	3700	3800
	nM	[rpm]	2930	2930	2945	2950	2950	2940	2955	2960	2970	2945	2945	2950	2940	2955	2970	2970	2970
	Pk	[kW]	14.2	17.8	22.9	29.5	33.3	37.4	42.5	46.2	50.5	20.6	26	33.6	38.6	43.7	50.4	57.5	59.5
	P_{mot}	[kW]	18.5	22	30	37	37	45	55	55	75	30	30	37	45	55	75	75	75
	Motor size		160 L	180 M	200 L	200 L	200 L	225 M	250 M	250 M	280 S	200 L	200 L	200 L	225 M	250 M	280 S	280 S	280 S
	Lp(A)[dB]	w/o.H./w.H.	86/73	89/72	90/75	94/73	96/73	101/74	102/75	99/75	100/75	88/71	91/71	94/74	95/73	96/72	100/72	100/73	101/73
800	$\dot{V}_1$	[m³/min]										**12**	**16.2**	**21.7**	**25.5**	**28.8**	**33.1**	**35.3**	**38.4**
	t_2	[°C]										113	106	101	99	98	97	96	95
	nG	[rpm]										1475	1840	2330	2660	2955	3330	3520	3800
	nM	[rpm]										2945	2950	2940	2960	2955	2970	2970	2970
	Pk	[kW]										23.4	29.4	37.8	43.8	49.3	56.7	60.7	66.7
	P_{mot}	[kW]										30	37	45	55	55	75	75	75
	Motor size											200 L	200 L	225 M	250 M	250 M	280 S	280 S	280 S
	Lp(A)[dB]	w/o.H./w.H.										89/72	91/72	94/75	96/73	99/73	101/72	101/72	102/72
900	$\dot{V}_1$	[m³/min]										**11.8**	**15.9**	**21.7**	**24.9**	**28.7**	**32.8**	**37**	**38.2**
	t_2	[°C]										127	119	113	110	108	107	106	105
	nG	[rpm]										1475	1840	2350	2630	2970	3330	3700	3800
	nM	[rpm]										2945	2950	2955	2955	2970	2970	2970	2970
	Pk	[kW]										26.2	32.9	42.6	48.2	55.2	63	71.5	73.9
	P_{mot}	[kW]										30	37	55	55	75	75	90	90
	Motor size											200 L	200 L	250 M	250 M	280 S	280 S	280 M2	280 M2
	Lp(A)[dB]	w/o.H./w.H.										89/72	92/72	95/75	96/73	99/73	101/73	102/73	103/73
1000	$\dot{V}_1$	[m³/min]											**15.6**	**21.4**	**24.7**	**28.5**	**30.3**	**36.8**	**37.9**
	t_2	[°C]											132	124	122	119	118	116	115
	nG	[rpm]											1840	2350	2640	2970	3130	3700	3800
	nM	[rpm]											2940	2955	2970	2970	2970	2970	2970
	Pk	[kW]											36.4	47.1	53.4	60.9	64.6	78.5	81.1
	P_{mot}	[kW]											45	55	75	75	75	90	90
	Motor size												225 M	250 M	280 S	280 S	280 S	280 M2	280 M2
	Lp(A)[dB]	w/o.H./w.H.											92/72	95/75	97/74	100/73	101/73	102/74	104/75

Lower differential pressures on request. Performance data are non-binding examples only.

Δp mbar	Blower size		GM 50 L / DN 150							GM 50 L / DN 200			GM 60 S / DN 200								
300	$\dot{V}_1$	[m³/min]	19.7	22.5	26	33.7	38.2	41.1	43.5	49.1	52.2	55.1	20.1	26.9	30.9	35.7	40.1	45.9	52.4	55.7	59
	t_2	[°C]	50	49	49	48	48	47	47	47	47	47	51	50	49	49	48	48	47	47	47
	nG	[rpm]	1465	1640	1860	2340	2620	2800	2950	3300	3490	3670	1150	1465	1650	1870	2070	2340	2640	2790	2940
	nM	[rpm]	2930	2930	2930	2945	2945	2950	2950	2950	2940	2940	2930	2930	2945	2945	2945	2950	2940	2940	2940
	Pk	[kW]	13.2	15	17.5	23.4	27.2	29.8	32.1	32.8	35.4	38	13.4	17.4	19.9	23	26	30.1	34.9	37.4	40
	P_{mot}	[kW]	15	18.5	22	30	30	37	37	37	45	45	15	22	30	30	30	37	45	45	45
	Motor size		160 M	160 L	180 M	200 L	200 L	200 L	200 L	200 L	225 M	225 M	160 M	180 M	200 L	200 L	200 L	200 L	225 M	225 M	225 M
	Lp(A)[dB]	w/o.H./w.H.	87/71	87/70	90/70	92/70	91/70	92/69	92/70	98/71	98/72	100/74	86/73	89/73	93/73	97/74	96/74	97/75	98/75	99/76	99/76
400	$\dot{V}_1$	[m³/min]	19.1	21.9	25.1	33.2	38.1	40.4	42.8	48.7	51.4	54.8	19.3	26.4	30.2	35	39.7	45	52.1	55.2	58.8
	t_2	[°C]	61	60	59	58	57	57	57	56	56	56	63	61	60	59	58	58	57	57	57
	nG	[rpm]	1465	1640	1840	2340	2650	2790	2940	3310	3480	3690	1150	1475	1650	1870	2090	2330	2660	2800	2970
	nM	[rpm]	2930	2930	2945	2950	2940	2940	2940	2955	2955	2960	2930	2945	2945	2950	2940	2940	2955	2955	2970
	Pk	[kW]	17.1	19.4	22.2	29.6	34.7	37.2	39.8	41.8	44.6	48.1	17.5	22.9	25.9	29.8	33.9	38.4	44.9	47.7	51.2
	P_{mot}	[kW]	22	22	30	37	45	45	45	55	55	55	22	30	30	37	45	45	55	55	75
	Motor size		180 M	180 M	200 L	200 L	225 M	225 M	225 M	250 M	250 M	250 M	180 M	200 L	200 L	200 L	225 M	225 M	250 M	250 M	280 S
	Lp(A)[dB]	w/o.H./w.H.	87/69	88/69	91/70	92/71	92/71	92/71	92/70	98/71	99/73	100/75	87/74	90/73	93/73	97/74	97/74	97/75	99/76	99/76	101/76
500	$\dot{V}_1$	[m³/min]	18.8	21.6	24.6	32.5	37.8	40	42.5	48.4	51.2	54.6	18.9	25.7	29.5	34.3	39.3	44.5	51.5	54.9	58.2
	t_2	[°C]	73	71	70	68	67	67	67	66	66	66	76	72	71	70	69	68	67	67	66
	nG	[rpm]	1475	1650	1840	2330	2660	2800	2955	3320	3500	3710	1160	1475	1650	1870	2100	2340	2660	2820	2970
	nM	[rpm]	2945	2945	2945	2940	2955	2955	2955	2970	2970	2970	2945	2950	2950	2940	2955	2955	2970	2970	2970
	Pk	[kW]	21.2	24	27.1	35.7	42	44.8	48	50.9	54.3	58.4	21.9	28.2	31.9	36.6	41.6	47.1	54.5	58.3	62
	P_{mot}	[kW]	30	30	30	45	55	55	55	75	75	75	30	37	37	45	55	55	75	75	75
	Motor size		200 L	200 L	200 L	225 M	250 M	250 M	250 M	280 S	280 S	280 S	200 L	200 L	200 L	225 M	250 M	250 M	280 S	280 S	280 S
	Lp(A)[dB]	w/o.H./w.H.	88/68	90/69	92/70	93/74	92/74	92/72	93/71	99/72	99/73	101/76	88/74	91/74	93/74	97/74	97/74	97/75	100/76	100/76	102/77
600	$\dot{V}_1$	[m³/min]	18.3	21.1	24.1	32.3	37.3	39.9	42.3	47.9	50.8	54.1	18.3	25.1	28.9	33.7	38.7	44.3	50.9	53.2	57.4
	t_2	[°C]	85	83	81	79	77	77	77	76	76	75	89	84	82	80	79	78	77	77	76
	nG	[rpm]	1475	1650	1840	2350	2660	2820	2970	3320	3500	3710	1160	1475	1650	1870	2100	2360	2660	2770	2960
	nM	[rpm]	2945	2950	2950	2955	2955	2970	2970	2970	2970	2970	2945	2950	2940	2955	2955	2970	2970	2970	1480
	Pk	[kW]	25.2	28.4	32	42.3	49.1	52.8	56.3	59.7	63.6	68.3	26.1	33.6	37.8	43.3	49.2	56.1	64.1	67.2	72.5
	P_{mot}	[kW]	30	37	37	55	55	75	75	75	75	90	30	37	45	55	55	75	75	75	90
	Motor size		200 L	200 L	200 L	250 M	250 M	280 S	280 S	280 S	280 S	280 M	200 L	200 L	225 M	250 M	250 M	280 S	280 S	280 S	280 M
	Lp(A)[dB]	w/o.H./w.H.	88/69	90/69	92/70	94/75	93/74	94/74	95/73	100/72	101/74	103/76	90/75	92/75	94/74	97/74	97/75	98/75	100/76	101/77	103/78
700	$\dot{V}_1$	[m³/min]	17.9	20.7	23.7	31.7	36.6	39.4	41.8	44.7	50.3	53.7	17.7	24.5	28.2	33.4	38.4	43.8	49.9	52.5	57.2
	t_2	[°C]	98	95	93	89	88	87	87	86	85	85	103	96	94	92	90	89	87	87	86
	nG	[rpm]	1475	1650	1840	2340	2640	2820	2970	3150	3500	3710	1160	1470	1640	1880	2110	2360	2640	2760	2980
	nM	[rpm]	2950	2950	2940	2955	2970	2970	2970	2970	2970	2970	2950	2940	2955	2970	2970	2970	1480	1480	1485
	Pk	[kW]	29.1	32.8	36.9	48.4	55.7	60.3	64.2	64.6	73	78.2	30.3	38.8	43.5	50.4	57.1	64.6	73.2	76.9	83.8
	P_{mot}	[kW]	37	37	45	55	75	75	75	75	90	90	37	45	55	75	75	75	90	90	110
	Motor size		200 L	200 L	225 M	250 M	280 S	280 S	280 S	280 S	280 M	280 M	200 L	225 M	250 M	280 S	280 S	280 S	280 M	280 M	315 S
	Lp(A)[dB]	w/o.H./w.H.	89/69	91/69	92/70	95/75	95/75	95/75	97/75	99/75	102/74	105/76	91/75	94/74	95/74	98/75	98/75	99/77	100/77	102/77	103/78
800	$\dot{V}_1$	[m³/min]											17.2	24.1	27.6	32.9	37.8	43.1	49.6	52.2	56.7
	t_2	[°C]											118	109	106	103	101	99	98	97	96
	nG	[rpm]											1160	1475	1640	1880	2110	2350	2650	2770	2980
	nM	[rpm]											2940	2955	2955	2970	2970	1480	1485	1485	1485
	Pk	[kW]											34.5	44.2	49.5	57.2	64.8	72.8	83.1	87.2	94.6
	P_{mot}	[kW]											45	55	55	75	75	90	110	110	110
	Motor size												225 M	250 M	250 M	280 S	280 S	280 M	315 S	315 S	315 S
	Lp(A)[dB]	w/o.H./w.H.											92/75	98/74	98/74	101/75	100/76	101/78	102/78	103/78	104/78
900	$\dot{V}_1$	[m³/min]											16.7	23.6	27.4	32.4	37.4	42.4	49.1	51.7	56.2
	t_2	[°C]											133	122	119	115	112	110	108	108	107
	nG	[rpm]											1160	1475	1650	1880	2110	2340	2650	2770	2980
	nM	[rpm]											2940	2955	2970	2970	1480	1480	1485	1485	1485
	Pk	[kW]											38.7	49.6	55.8	64	72.4	80.9	92.6	97.2	105
	P_{mot}	[kW]											45	55	75	75	90	90	110	110	132
	Motor size												225 M	250 M	280 S	280 S	280 M	280 M	315 S	315 S	315 M
	Lp(A)[dB]	w/o.H./w.H.											92/75	97/74	99/75	101/75	101/76	100/77	102/78	103/78	104/78
1000	$\dot{V}_1$	[m³/min]												23.3	26.9	31.9	36.3	42.1	48.6	51.2	55.8
	t_2	[°C]												135	131	127	124	121	119	118	117
	nG	[rpm]												1485	1650	1880	2080	2350	2650	2770	2980
	nM	[rpm]												2970	2970	1480	1480	1485	1485	1485	1485
	Pk	[kW]												55.3	61.7	70.8	78.8	89.8	102	107	116
	P_{mot}	[kW]												75	75	90	90	110	132	132	132
	Motor size													280 S	280 S	280 M	280 M	315 S	315 M	315 M	315 M
	Lp(A)[dB]	w/o.H./w.H.												98/75	100/76	102/76	101/77	100/78	102/78	103/78	105/78

Lower differential pressures on request. GM 50 L from 45 m³/min - accessories DN 200. Performance data are non-binding examples only.

Δp mbar	Blower size		GM 80 L / DN 250									GM 90 S / DN 250								
300	$\dot{V}_1$	[m³/min]	**22.8**	**33.1**	**37.9**	**46.4**	**56.2**	**64.2**	**73.5**	**78.7**	**83.9**	**33.7**	**43.8**	**54.2**	**58.7**	**66.6**	**70.8**	**80.3**	**85.7**	**90.3**
	t_2	[°C]	53	51	50	49	48	48	48	47	47	50	49	48	48	48	48	47	47	47
	nG	[rpm]	975	1310	1465	1740	2060	2320	2620	2790	2960	978	1220	1470	1580	1770	1870	2100	2230	2340
	nM	[rpm]	1460	1465	1465	1470	1470	1475	1480	1480	1480	1465	1465	1470	1470	1475	1475	1480	1480	1480
	Pk	[kW]	15.8	21.7	24.5	29.9	36.7	42.8	50.5	55.2	60.3	21.3	27.1	33.7	36.8	42.6	45.8	53.7	58.4	62.7
	P_{mot}	[kW]	18.5	30	30	37	45	55	75	75	75	30	30	45	45	55	55	75	75	75
	Motor size		180 M	200 L	200 L	225 S	225 M	250 M	280 S	280 S	280 S	200 L	200 L	225 M	225 M	250 M	250 M	280 S	280 S	280 S
	Lp(A)[dB]	w/o.H./w.H.	86/73	89/75	90/75	94/73	97/75	96/76	97/78	98/78	101/79	88/73	91/74	94/75	94/74	100/75	101/76	100/79	99/78	100/78
400	$\dot{V}_1$	[m³/min]	**21.7**	**32.0**	**36.9**	**45.2**	**56.0**	**63.4**	**72.7**	**77.6**	**82.8**	**32.8**	**43.1**	**53.3**	**57.7**	**64.7**	**70.1**	**79.3**	**84.7**	**89.2**
	t_2	[°C]	66	62	61	60	58	58	57	57	57	62	60	58	58	58	57	57	57	56
	nG	[rpm]	975	1310	1470	1740	2090	2330	2630	2790	2960	980	1230	1475	1580	1750	1880	2100	2230	2340
	nM	[rpm]	1465	1470	1470	1470	1475	1480	1480	1480	1480	1470	1470	1475	1475	1480	1480	1480	1480	1480
	Pk	[kW]	20.8	28.4	32.2	38.8	48.1	55.0	64.3	69.6	75.5	28.1	35.9	44.1	47.8	54.1	59.1	68.2	73.9	78.9
	P_{mot}	[kW]	30	37	37	45	55	75	75	90	90	37	45	55	55	75	75	90	90	90
	Motor size		200 L	225 S	225 S	225 M	250 M	280 S	280 S	280 M	280 M	225 S	225 M	250 M	250 M	280 S	280 S	280 M	280 M	280 M
	Lp(A)[dB]	w/o.H./w.H.	86/73	90/75	92/75	95/74	96/75	96/77	98/78	99/79	102/80	89/74	92/75	95/76	97/75	100/76	101/76	100/79	100/78	100/77
500	$\dot{V}_1$	[m³/min]	**20.7**	**31.0**	**35.9**	**44.3**	**55.4**	**62.4**	**72.0**	**76.6**	**82.1**	**31.8**	**42.2**	**52.6**	**56.3**	**63.8**	**69.2**	**79.2**	**83.7**	**90.0**
	t_2	[°C]	81	74	73	71	69	68	67	67	67	74	71	69	68	68	67	67	66	66
	nG	[rpm]	975	1310	1470	1740	2100	2330	2640	2790	2970	980	1230	1480	1570	1750	1880	2120	2230	2380
	nM	[rpm]	1465	1470	1470	1475	1480	1480	1480	1485	1485	1470	1475	1480	1480	1480	1480	1485	1485	1485
	Pk	[kW]	25.8	35.1	39.7	47.8	59.2	67.0	78.2	83.9	91.1	34.9	44.4	54.5	58.3	66.2	72.1	83.7	89.3	97.2
	P_{mot}	[kW]	30	45	45	55	75	75	90	110	110	45	55	75	75	75	90	110	110	110
	Motor size		200 L	225 M	225 M	250 M	280 S	280 S	280 M	315 S	315 S	225 M	250 M	280 S	280 S	280 S	280 M	315 S	315 S	315 S
	Lp(A)[dB]	w/o.H./w.H.	87/74	92/75	93/75	95/74	95/76	96/77	99/78	101/79	103/80	89/74	92/76	96/77	97/76	101/76	102/76	101/79	100/78	101/77
600	$\dot{V}_1$	[m³/min]	**20.0**	**30.1**	**35.2**	**43.7**	**54.5**	**61.9**	**72.0**	**75.7**	**81.3**	**31.1**	**41.4**	**51.7**	**55.5**	**63.0**	**68.4**	**78.3**	**82.9**	**89.5**
	t_2	[°C]	96	87	85	82	80	79	77	77	77	86	82	80	79	78	77	76	76	76
	nG	[rpm]	980	1310	1475	1750	2100	2340	2670	2790	2970	982	1230	1480	1570	1750	1880	2120	2230	2390
	nM	[rpm]	1470	1475	1475	1480	1480	1480	1485	1485	1485	1475	1480	1480	1480	1480	1485	1485	1485	1485
	Pk	[kW]	31.0	41.8	47.4	57.1	70.0	79.3	93.0	98.2	106	41.8	52.9	64.7	69.1	78.3	85.1	98.4	105	114
	P_{mot}	[kW]	37	55	55	75	90	90	110	110	132	55	75	75	90	90	110	110	132	132
	Motor size		225 S	250 M	250 M	280 S	280 M	280 M	315 S	315 S	315 M	250 M	280 S	280 S	280 M	280 M	315 S	315 S	315 M	315 M
	Lp(A)[dB]	w/o.H./w.H.	89/74	91/75	93/75	95/75	95/76	96/78	99/78	101/79	103/80	90/74	93/77	97/78	98/77	102/76	103/76	101/79	101/78	102/77
700	$\dot{V}_1$	[m³/min]	**19.1**	**29.3**	**34.5**	**42.9**	**53.6**	**61.0**	**71.2**	**74.9**	**80.1**	**30.3**	**40.6**	**51.0**	**54.7**	**62.6**	**67.6**	**77.5**	**82.1**	**87.5**
	t_2	[°C]	112	101	97	94	91	89	88	87	87	99	94	91	90	88	88	87	86	86
	nG	[rpm]	980	1310	1480	1750	2100	2340	2670	2790	2960	982	1230	1480	1570	1760	1880	2120	2230	2360
	nM	[rpm]	1470	1475	1480	1480	1480	1485	1485	1485	1480	1475	1480	1480	1480	1485	1485	1485	1480	1480
	Pk	[kW]	36.0	48.6	55.2	66.1	80.8	91.4	107	113	121	48.6	61.4	75.0	80.0	91.0	98.2	113	120	129
	P_{mot}	[kW]	45	55	75	75	90	110	132	132	160	55	75	90	90	110	110	132	160	160
	Motor size		225 M	250 M	280 S	280 S	280 M	315 S	315 M	315 M	315 M	250 M	280 S	280 M	280 M	315 S	315 S	315 M	315 M	315 M
	Lp(A)[dB]	w/o.H./w.H.	88/75	91/75	93/75	95/76	95/77	97/78	101/79	102/79	104/80	91/75	94/77	98/78	99/77	103/77	104/76	102/78	102/78	103/79
800	$\dot{V}_1$	[m³/min]										**29.7**	**39.9**	**50.4**	**54.0**	**61.9**	**67.3**	**76.8**	**81.0**	**86.8**
	t_2	[°C]										112	106	102	101	99	98	97	96	96
	nG	[rpm]										985	1230	1485	1570	1760	1890	2120	2220	2360
	nM	[rpm]										1480	1480	1485	1485	1485	1485	1480	1480	1480
	Pk	[kW]										55.6	69.9	85.5	90.9	103	112	128	135	145
	P_{mot}	[kW]										75	90	110	110	132	132	160	160	160
	Motor size											280 S	280 M	315 S	315 S	315 M	315 M	315 M	315 M	315 M
	Lp(A)[dB]	w/o.H./w.H.										91/75	95/77	99/78	100/77	104/77	105/77	104/78	103/79	104/81
900	$\dot{V}_1$	[m³/min]										**29.0**	**39.2**	**49.8**	**53.3**	**61.2**	**66.6**	**76.1**	**80.3**	**86.1**
	t_2	[°C]										126	118	113	112	110	109	107	106	106
	nG	[rpm]										985	1230	1485	1570	1760	1890	2120	2220	2360
	nM	[rpm]										1480	1480	1485	1485	1485	1480	1480	1485	1485
	Pk	[kW]										62.4	78.4	95.8	102	115	125	142	150	161
	P_{mot}	[kW]										75	90	110	132	132	160	160	200	200
	Motor size											280 S	280 M	315 S	315 M	315 M	315 M	315 M	315 M	315 M
	Lp(A)[dB]	w/o.H./w.H.										91/75	95/77	98/79	100/78	104/79	105/78	104/78	103/80	104/81
1000	$\dot{V}_1$	[m³/min]											**38.5**	**49.1**	**52.7**	**60.5**	**65.9**	**75.5**	**79.6**	**85.5**
	t_2	[°C]											131	125	124	121	120	118	117	116
	nG	[rpm]											1230	1485	1570	1760	1890	2120	2220	2360
	nM	[rpm]											1485	1485	1485	1480	1480	1485	1485	1485
	Pk	[kW]											86.9	106	113	128	138	157	166	178
	P_{mot}	[kW]											110	132	132	160	160	200	200	200
	Motor size												315 S	315 M	315 M	315 M	315 M	315 M	315 M	315 M
	Lp(A)[dB]	w/o.H./w.H.											95/78	98/79	100/79	104/80	105/80	104/80	104/81	104/81

Lower differential pressures on request. Performance data are non-binding examples only.

Δp mbar	Blower size		GM 130 L / DN 300									GM 150 S / DN 300							
300	$\dot{V}_1$	[m³/min]	**47.8**	**62.9**	**78.0**	**82.2**	**94.3**	**102**	**115**	**131**	**134**	**77.3**	**94.4**	**102**	**116**	**122**	**132**	**147**	**152**
	t_2	[°C]	51	50	49	49	48	48	48	47	47	49	48	48	48	48	47	47	47
	nG	[rpm]	980	1230	1480	1550	1750	1880	2100	2350	2400	982	1170	1250	1410	1480	1580	1750	1800
	nM	[rpm]	1470	1470	1480	1480	1480	1480	1480	1485	1485	1475	1480	1480	1480	1480	1485	1485	1485
	Pk	[kW]	32.0	40.8	50.5	53.3	61.9	67.9	78.7	92.1	95.0	48.4	59.4	64.5	75.3	80.3	87.8	102	106
	P_{mot}	[kW]	37	45	75	75	75	75	90	110	110	55	75	75	90	90	110	132	132
	Motor size		225 S	225 M	280 S	280 S	280 S	280 S	280 M	315 S	315 S	250 M	280 S	280 S	280 M	280 M	315 S	315 M	315 M
	Lp(A)[dB]	w/o.H./w.H.	93/75	95/77	101/79	100/79	101/80	101/80	103/81	104/82	104/82	95/79	97/79	97/79	97/80	98/80	99/80	101/81	101/81
400	$\dot{V}_1$	[m³/min]	**46.2**	**61.2**	**76.3**	**80.5**	**93.2**	**100**	**115**	**130**	**132**	**75.8**	**92.6**	**101**	**114**	**121**	**130**	**146**	**150**
	t_2	[°C]	63	61	59	59	58	58	57	57	57	59	58	58	57	57	57	57	57
	nG	[rpm]	982	1230	1480	1550	1760	1880	2120	2370	2400	985	1170	1260	1410	1485	1580	1760	1800
	nM	[rpm]	1475	1480	1480	1480	1480	1485	1485	1485	1485	1480	1480	1485	1485	1485	1485	1480	1480
	Pk	[kW]	41.9	53.2	65.4	68.9	80.1	86.8	101	117	119	63.4	77.1	84.2	96.6	103	112	129	133
	P_{mot}	[kW]	55	75	75	90	90	110	132	132	132	75	90	110	110	132	132	160	160
	Motor size		250 M	280 S	280 S	280 M	280 M	315 S	315 M	315 M	315 M	280 S	280 M	315 S	315 S	315 M	315 M	315 M	315 M
	Lp(A)[dB]	w/o.H./w.H.	93/76	96/78	102/80	101/79	102/80	103/81	103/81	105/83	106/83	96/79	97/79	98/79	98/80	98/80	99/80	101/81	102/82
500	$\dot{V}_1$	[m³/min]	**44.8**	**60.8**	**74.7**	**86.2**	**91.6**	**98.9**	**113**	**128**	**130**	**74.2**	**91**	**100**	**113**	**120**	**127**	**144**	**148**
	t_2	[°C]	76	72	70	69	69	68	67	67	67	70	69	68	67	67	67	66	66
	nG	[rpm]	985	1250	1480	1670	1760	1880	2120	2370	2400	985	1170	1270	1410	1485	1570	1760	1800
	nM	[rpm]	1480	1480	1480	1485	1485	1485	1480	1480	1480	1480	1485	1485	1485	1480	1480	1485	1485
	Pk	[kW]	52.0	66.8	80.3	92.0	97.8	106	122	141	143	78.3	94.8	104	118	126	135	156	160
	P_{mot}	[kW]	75	75	90	110	110	132	160	160	160	90	110	132	132	160	160	200	200
	Motor size		280 S	280 S	280 M	315 S	315 S	315 M	315 M	315 M	315 M	280 M	315 S	315 M	315 M	315 M	315 M	315 M	315 M
	Lp(A)[dB]	w/o.H./w.H.	92/77	97/79	102/80	101/80	103/81	104/81	104/81	107/83	107/83	97/79	97/79	98/79	98/79	98/80	99/81	101/82	102/82
600	$\dot{V}_1$	[m³/min]	**43.4**	**59.4**	**73.6**	**84.8**	**90.2**	**97.5**	**112**	**119**	**126**	**72.7**	**89.5**	**101**	**110**	**118**	**126**	**143**	**147**
	t_2	[°C]	89	84	81	80	79	79	77	77	77	82	80	78	78	77	77	76	76
	nG	[rpm]	985	1250	1485	1670	1760	1880	2120	2230	2360	985	1170	1300	1400	1485	1570	1760	1800
	nM	[rpm]	1480	1480	1485	1485	1485	1480	1480	1485	1485	1485	1485	1480	1480	1485	1485	1485	1485
	Pk	[kW]	61.9	79.3	95.5	109	116	125	144	153	164	93.2	113	127	138	148	158	182	188
	P_{mot}	[kW]	75	90	110	132	132	160	160	200	200	110	132	160	160	200	200	250	250
	Motor size		280 S	280 M	315 S	315 M	315 M	315 M	315 M	315 M	315 M	315 S	315 M	315 M	315 M	315 M	315 M	315 L	315 L
	Lp(A)[dB]	w/o.H./w.H.	94/78	97/80	104/82	102/82	104/83	105/83	107/83	107/83	107/84	99/79	99/79	99/79	99/80	100/80	100/82	102/83	102/83
700	$\dot{V}_1$	[m³/min]										**71.4**	**88.2**	**96.3**	**109**	**117**	**125**	**142**	**145**
	t_2	[°C]										93	91	89	88	88	87	86	86
	nG	[rpm]										985	1170	1260	1400	1485	1580	1760	1800
	nM	[rpm]										1485	1480	1480	1485	1485	1485	1485	1485
	Pk	[kW]										108	130	141	159	170	183	209	215
	P_{mot}	[kW]										132	160	160	200	200	250	250	250
	Motor size											315 M	315 M	315 M	315 M	315 M	315 L	315 L	315 L
	Lp(A)[dB]	w/o.H./w.H.										100/80	100/80	100/80	100/80	101/81	101/82	102/83	102/83
800	$\dot{V}_1$	[m³/min]										**70.2**	**88.8**	**96.0**	**108**	**116**	**124**	**140**	**144**
	t_2	[°C]										105	101	100	99	98	97	96	96
	nG	[rpm]										985	1190	1270	1400	1488	1580	1760	1800
	nM	[rpm]										1480	1485	1485	1485	1485	1485	1490	1490
	Pk	[kW]										123	151	162	180	193	207	235	242
	P_{mot}	[kW]										160	200	200	200	250	250	315	315
	Motor size											315 M	315 M	315 M	315 M	315 L	315 L	315 L	315 L
	Lp(A)[dB]	w/o.H./w.H.										101/80	100/80	100/80	100/80	102/82	102/83	102/83	103/84
900	$\dot{V}_1$	[m³/min]										**69**	**87.6**	**94.9**	**107**	**115**	**123**	**139**	**143**
	t_2	[°C]										118	113	111	110	109	108	106	106
	nG	[rpm]										985	1190	1270	1400	1488	1580	1760	1800
	nM	[rpm]										1480	1485	1485	1485	1485	1490	1490	1490
	Pk	[kW]										138	169	181	202	216	231	262	269
	P_{mot}	[kW]										160	200	200	250	250	315	315	315
	Motor size											315 M	315 M	315 M	315 L	315 L	315 L	315 L	315 L
	Lp(A)[dB]	w/o.H./w.H.										102/81	101/80	101/80	101/81	102/83	103/84	103/84	103/84
1000	$\dot{V}_1$	[m³/min]										**68.4**	**86.5**	**93.8**	**106**	**114**	**122**	**138**	**142**
	t_2	[°C]										130	124	123	121	120	118	117	116
	nG	[rpm]										990	1190	1270	1400	1488	1580	1760	1800
	nM	[rpm]										1485	1485	1485	1485	1490	1490	1490	1490
	Pk	[kW]										154	187	200	223	238	255	289	296
	P_{mot}	[kW]										200	250	250	250	315	315	355	355
	Motor size											315 M	315 L	315 L	315 L	315 L	315 L	355 M	355 M
	Lp(A)[dB]	w/o.H./w.H.										103/82	102/81	102/80	102/81	103/84	104/84	103/84	104/84

Lower differential pressures on request. Higher intake volume flows on request. Performance data are non-binding examples only.



AERZEN. Compression as success factor.

AERZEN was founded in 1864 as Aerzener Maschinenfabrik. In 1868 we built Europe's first rotary lobe blower. The first turbo blowers followed in 1911, the first screw compressors in 1943, and in 2010 the world's first rotary lobe compressor unit. AERZEN innovations are a driving force behind the development of compressor technology. Today AERZEN is one of the world's oldest and most important manufacturers of rotary lobe blowers, rotary lobe compressors, rotary lobe gas meters, screw compressors, and turbo blowers. And in many areas of application, AERZEN is among the undisputed leaders.

There are more than 2,000 experienced AERZEN employees in over 40 affiliates worldwide working hard to advance compressor technology. Their technological expertise, our international network of experts, and the constant feedback from our customers are what make us successful. AERZEN products and services have become standards in the industry for reliability, lasting value, and efficiency. Go ahead: challenge us!

Aerzener Maschinenfabrik GmbH
Reherweg 28 – 31855 Aerzen / Germany
Telephone: +49 5154 81-0 – Fax: +49 5154 81-9191
info@aerzener.de – www.aerzen.com

AERZEN
EXPECT PERFORMANCE

G1-068 – 04 – EN – 2500 – 08.2014

Aerzen Canada
980 rue Valois, Vaudreuil-Dorion, Québec J7V 8P2

Customer Reference: 510464 - Caesar Lanes
Aerzen Reference: 259014f

Submitted by: Farzin Mahmoudi
Farzin.Mahmoudi@aerzen.com

SCOPE OF SUPPLY

Membrane blowers with VFDs

2 Aerzen Generation 5 Blower Package - GM 50L DN 200 - Pressure - including:

Aerzen GM 50L Blower

Drive Motor: 60hp, 1800rpm, TEFC, 460V/60Hz
Motor Protection - 1 Thermistor/Ph
Base with integrated reactive type discharge silencer
Intake filter silencer
Hinged motor support as automatic belt tensioning device
Set of vibration isolation mounts
Narrow v-belt drive with guard - 1 set
Spring loaded relief valve
Discharge manifold with externally accessible integrated check valve
Flexible connector with clamps for schedule 40 pipe, discharge
Acoustic Enclosure - Indoor/Outdoor
Inlet flexible sleeve - DN 200 (8")

Instruments

Pressure gauge c/w isolation ball valve (2x)
Dirty filter indicator (2x)

Optional Spare Parts

1 Year Maintenance Kit (1 x V-Belt Set, 1 x Intake Filter)
2 Year Maintenance Kit (1 x V-Belt Set, 1 x Oil Change (Delta Lube), 2 x Air Filter)

Intake Connection: DN 200 - 8"
Discharge Connection: DN 200 - 8"

Aerzen Canada
980 rue Valois, Vaudreuil-Dorion, Québec J7V 8P2

Customer Reference: 510464 - Caesar Lanes
Aerzen Reference: 259014f

PERFORMANCE DATA

Aerzen Blower Package - GM 50L DN 200 - Pressure

Configuration:	**G5**	**"Buildout" LEAP HI**	**"Buildout" LEAP LO**	**Installed LEAP HI**	**Installed LEAP LO**	**Max Blower capacity with 60 hp motor**	**Min blower Turn down**
Conditions:	**Scfm**	**1540**	**769**	**1414**	**707**	**1615**	**276**
Flow at inlet conditions	m³/min	45.62	22.8	41.91	20.95	47.9	50.55
	Icfm	**1611**	**805**	**1480**	**740**	**1690**	**288**
Inlet pressure (abs.)	bar	1.012	1.012	1.012	1.012	1.012	1.012
	Psi	14.68	14.68	14.68	14.68	14.68	14.68
Pressure differential	mbar(g)	379	379	379	379	379	379
	Psig	**5.5**	**5.5**	**5.5**	**5.5**	**5.5**	**5.5**
Inlet temperature	°C	29.44	29.44	29.44	29.44	29.44	29.44
Discharge temperature	°C	65	68	65	68	65	79
Blower speed	RPM	3119	1692	2887	1578	3265	780
Blower maximum speed	RPM	3800	3800	3800	3800	3800	3800
% of maximum blower speed		82%	45%	76%	42%	86%	21%
Power required at shaft	kW	37.5	18.3	34.0	17.0	39.7	8.4
	HP	50.2	24.5	45.6	22.8	53.2	11.3
Total Power (Wire to Air):	HP	55.6	27.2	50.5	25.2	59.0	12.5
Motor rating	**HP**	**60.0**					
Motor speed	RPM	1775	963	1643	898	1858	444
Motor frequency	Hz	60	33	56	31		15

Noise level without acoustic hood	dB(A)	97
Noise level with acoustic hood	dB(A)	70

Tolerances as per EN 10204, in accordance with standard ISO 1217:
Flow at inlet conditions / Power require +/- 5%

Blower package noise level:
Free field measurement at 1m from the complete blower package (tolerance +/- 2 dB(A))

Tests and measurements:
Blower stage: 1.5 hour flow test at the factory (Germany) on a calibrated test bed, at maximum operating conditions and according to DIN 1945. acceptance tolerance: +/- 5%.
A complete test report is available upon request.

On Site Commissioning
Available upon request, charges to be advised.
- Any commissioning activity is subject to two weeks prior notice and completion of commissioning checklist.
- Any on-site activity outside the time indicated will be billed according to the Aerzen Standard Rate Sheet

Exclusions
Control Panels, Motor Starters, Piping and Electrical Connections
* Unloading valves are required for reduced voltage starters

Warranty
Blowers including accessories are warranted for a period of 30mo / max 36mo after delivery and after provisional acceptance of the work against defects in workmanship and design. This warranty does not cover wearing parts unless such parts are defective during shipping / commissioning. As per Aerzen standard warranty terms.

** Power at shaft excludes drive motor and belt drive

Customer Reference: 510464 - Caesar Lanes
Aerzen Reference: 259014f

Submitted by: Farzin Mahmoudi
Farzin.Mahmoudi@aerzen.com

SCOPE OF SUPPLY

Membrane blowers without VFDs

3 Aerzen Generation 5 Blower Package - GM 50L DN 200 - Pressure - including:

Aerzen GM 50L Blower

Drive Motor: 60hp, 1800rpm, TEFC, 460V/60Hz
Motor Protection - 1 Thermistor/Ph
Base with integrated reactive type discharge silencer
Intake filter silencer
Hinged motor support as automatic belt tensioning device
Set of vibration isolation mounts
Narrow v-belt drive with guard - 1 set
Spring loaded relief valve
Discharge manifold with externally accessible integrated check valve
Flexible connector with clamps for schedule 40 pipe, discharge
Acoustic Enclosure - Indoor/Outdoor
Inlet flexible sleeve - DN 200 (8")

Instruments

Pressure gauge c/w isolation ball valve (3x)
Dirty filter indicator (3x)

Optional Accessories

Unloading Valve - G5

Optional Spare Parts

1 Year Maintenance Kit (1 x V-Belt Set, 1 x Intake Filter)
2 Year Maintenance Kit (1 x V-Belt Set, 1 x Oil Change (Delta Lube), 2 x Air Filter)

Intake Connection: DN 200 - 8"
Discharge Connection: DN 200 - 8"

Aerzen Canada
980 rue Valois, Vaudreuil-Dorion, Québec J7V 8P2

Customer Reference: 510464 - Caesar Lanes
Aerzen Reference: 259014f

PERFORMANCE DATA

Aerzen Blower Package - GM 50L DN 200 - Pressure

Configuration:	**G5**	**"Buildout" LEAP HI**	**Installed LEAP HI**	**Max Blower capacity with 60 hp motor**	**Min blower Turn down**
Conditions:	**Scfm**	**1540**	**1414**	**1615**	**276**
Flow at inlet conditions	m³/min	45.62	41.91	47.9	50.55
	lcfm	**1611**	**1480**	**1690**	**288**
Inlet pressure (abs.)	bar	1.012	1.012	1.012	1.012
	Psi	14.68	14.68	14.68	14.68
Pressure differential	mbar(g)	379	379	379	379
	Psig	**5.5**	**5.5**	**5.5**	**5.5**
Inlet temperature	°C	29.44	29.44	29.44	29.44
Discharge temperature	°C	65	65	65	79
Blower speed	RPM	3119	2887	3265	780
Blower maximum speed	RPM	3800	3800	3800	3800
% of maximum blower speed		82%	76%	86%	21%
Power required at shaft	kW	37.5	34.0	39.7	8.4
	HP	50.2	45.6	53.2	11.3
Total Power (Wire to Air):	HP	55.6	50.5	59.0	12.5
Motor rating	**HP**	**60.0**			
Motor speed	RPM	1775	1643	1858	444
Motor frequency	Hz	60	56		15

Noise level without acoustic hood	dB(A)	97
Noise level with acoustic hood	dB(A)	70

Tolerances as per EN 10204, in accordance with standard ISO 1217:
Flow at inlet conditions / Power required at +/- 5%

Blower package noise level:
Free field measurement at 1m from the complete blower package (tolerance +/- 2 dB(A))

Tests and measurements:
Blower stage: 1.5 hour flow test at the factory (Germany) on a calibrated test bed, at maximum operating conditions and according to DIN 1945. acceptance tolerance: +/- 5%.
A complete test report is available upon request.

On Site Commissioning
Available upon request, charges to be advised.
- Any commissioning activity is subject to two weeks prior notice and completion of commissioning checklist.
- Any on-site activity outside the time indicated will be billed according to the Aerzen Standard Rate Sheet

Exclusions
Control Panels, Motor Starters, Piping and Electrical Connections
* Unloading valves are required for reduced voltage starters

Warranty
Blowers including accessories are warranted for a period of 30mo / max 36mo after delivery and after provisional acceptance of the work against defects in workmanship and design. This warranty does not cover wearing parts unless such parts are defective during shipping / commissioning. As per Aerzen standard warranty terms.

** Power at shaft excludes drive motor and belt drive

NOTICE: THIS DRAWING AND ALL INFORMATION HEREIN IS THE PROPERTY OF AERZEN CANADA INC. AND ITS SUBSIDIARIES AND SHALL NOT BE REPRODUCED BY ANY MEANS IN WHOLE OR IN PART OR USED AS THE BASIS FOR MANUFACTURE WITHOUT WRITTEN PERMISSION.

CAUTION

BLOWER PACKAGES MUST BE CAREFULLY LEVELED. USE OIL LEVEL ON SIGHT GLASSES OF THE BLOWER STAGE. USE PROVIDED SHIMS TO ADJUST LEVEL IF NECESSARY. PLEASE REFER TO THE OPERATING AND INSTALLATION INSTRUCTIONS MANUAL (DOCUMENT # G4-006) FOR MORE DETAILS.

for straddling dowels A/B 15/15 - Liebig - dowel
(not included in Aerzen's scope of supply)

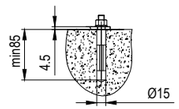

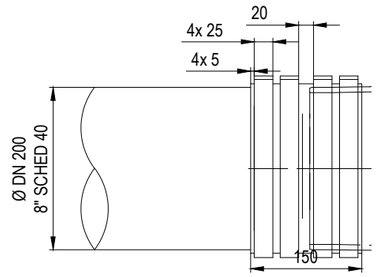

DISCHARGE CONNECTION DETAILS

NOTE	QTY.	POS	DESCRIPTION
	1	1	BLOWER - GM 50L - 360 KG
D	1	2	MOTOR: 400 FRAME REPRESENTED
	1	3	BASE FRAME / DISCHARGE SILENCER
	1	4	CONNECTION HOUSING WITH CHECK VALVE - DN 200
	4	5	SET OF 4 VIBRATION ISOLATORS
	1	6	DISCHARGE FLEXIBLE SLEEVE - DN 200 / 8" SCHED. 40
	1	7	PRESSURE RELIEF VALVE - DN 125 - SET TO 750 mbar
	1	8	INLET FILTER / SILENCER ASSEMBLY - DN 200
	1	9	INLET FILTER ELEMENT
E	1	10	BELT GUARD
	1	11	DRIVER SHEAVE
E	1	12	DRIVER BUSHING
	1	13	DRIVEN SHEAVE
E	1	14	DRIVEN BUSHING
	1	15	V-BELT SET
	1	16	FILTER MAINTENANCE INDICATOR - WIKA
	1	17	DISCHARGE PRESSURE GAUGE WITH BALL VALVE - WIKA
	1	18	ACOUSTIC ENCLOSURE - G5 - INDOOR INSTALLATION
	1	19	MECHANICAL FAN - MOUNTED ON THE BLOWER SHAFT - GM 50L
G	1	20	INLET FLEXIBLE EPDM SLEEVE - DN 200 / 8" SCHED. 40
G	1	21	UNLOADING VALVE

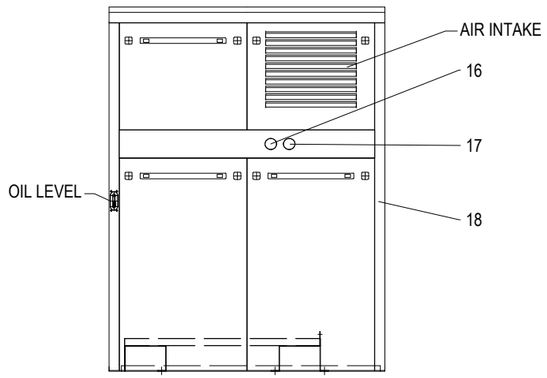

VIEW 'A-A' FRONT OF PACKAGE

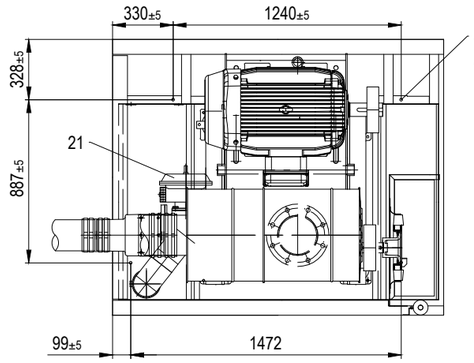

Membrane Blowers with VFD :
TAG:
20-B-201-A/B
20-F-201-A/B
20-PSV-201-A/B
20-HV-203-A/B
20-PI-203-A/B
20-CV-201-A/B

Membrane Blowers without VFD:
TAG:
20-B-201-C/D/E
20-F-201-C/D/E
20-PSV-201-C/D/E
20-HV-203-C/D/E
20-PI-203-C/D/E
20-CV-201-C/D/E

NOTES:

A. ASSEMBLY WEIGHT WITHOUT MOTOR: 1460 KG
B. PAINT: PACKAGE - AERZEN STANDARD BLUE
C. 1M CLEARANCE IS RECOMMENDED AT THE FRONT OF THE PACKAGE FOR MAINTENANCE ACCESS
D. MOTOR: 400 FRAME REPRESENTED, OTHER SIZE AVAILABLE
E. INCLUDED BUT NOT SHOWN ON DRAWING
F. FOR VARIABLE SPEED APPLICATIONS, CONSTANT TORQUE VFD ARE REQUIRED
G. OPTIONAL

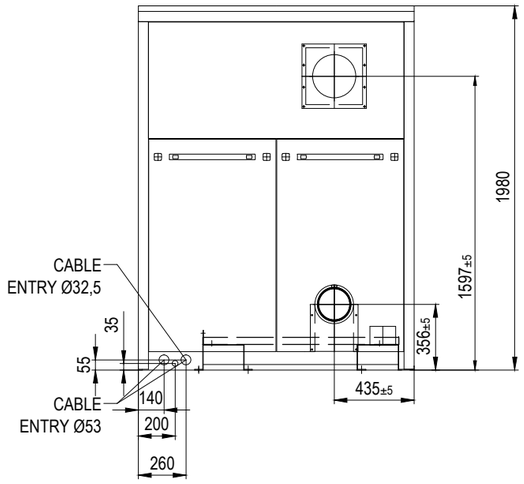

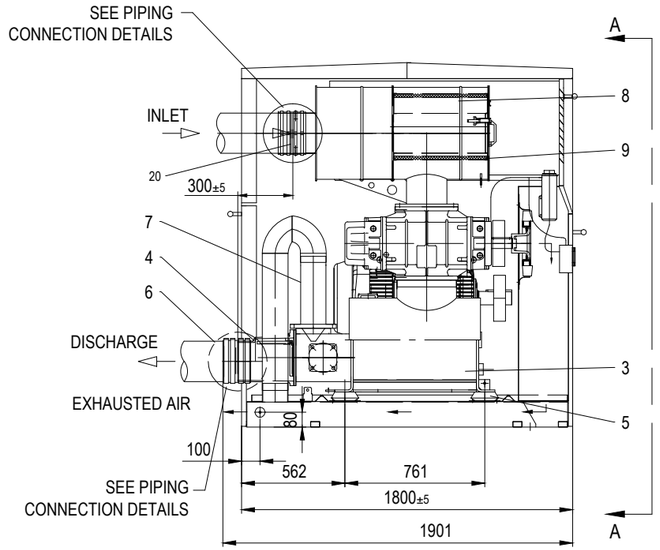

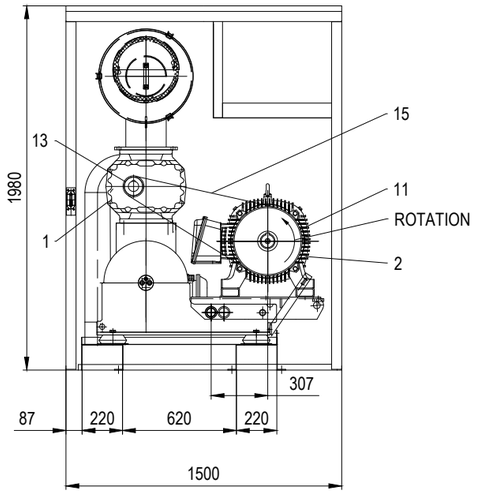

REVISION DETAILS						
REV	DRAWN BY	DATE	REVIEWED	DATE	DETAILS	AREA
A	-	23/07/14	-	23/07/14	RELEASE	-

AERZEN

AERZEN CANADA INC
1995 MONTEE LABOSSIERE, VAUDREUIL QC J7V 8P2
(450) 424-3966 PH, (450) 424-3985 FX

THIRD ANGLE PROJECTION

GEN 5 - GM 50L PRESSURE

DWG NO. ZG-00771S

DRAWN BY -

REVIEWED BY -

DATE 23 JULY 2014

REV A

SCALE: NONE | SIZE: B | SHEET: 1 OF 1

Membrane Blowers:
Tag:
20-B-201-A/B/C/D/E

AERZEN GM 50L DELTA PACKAGE, PRESSURE

INLET FLOW

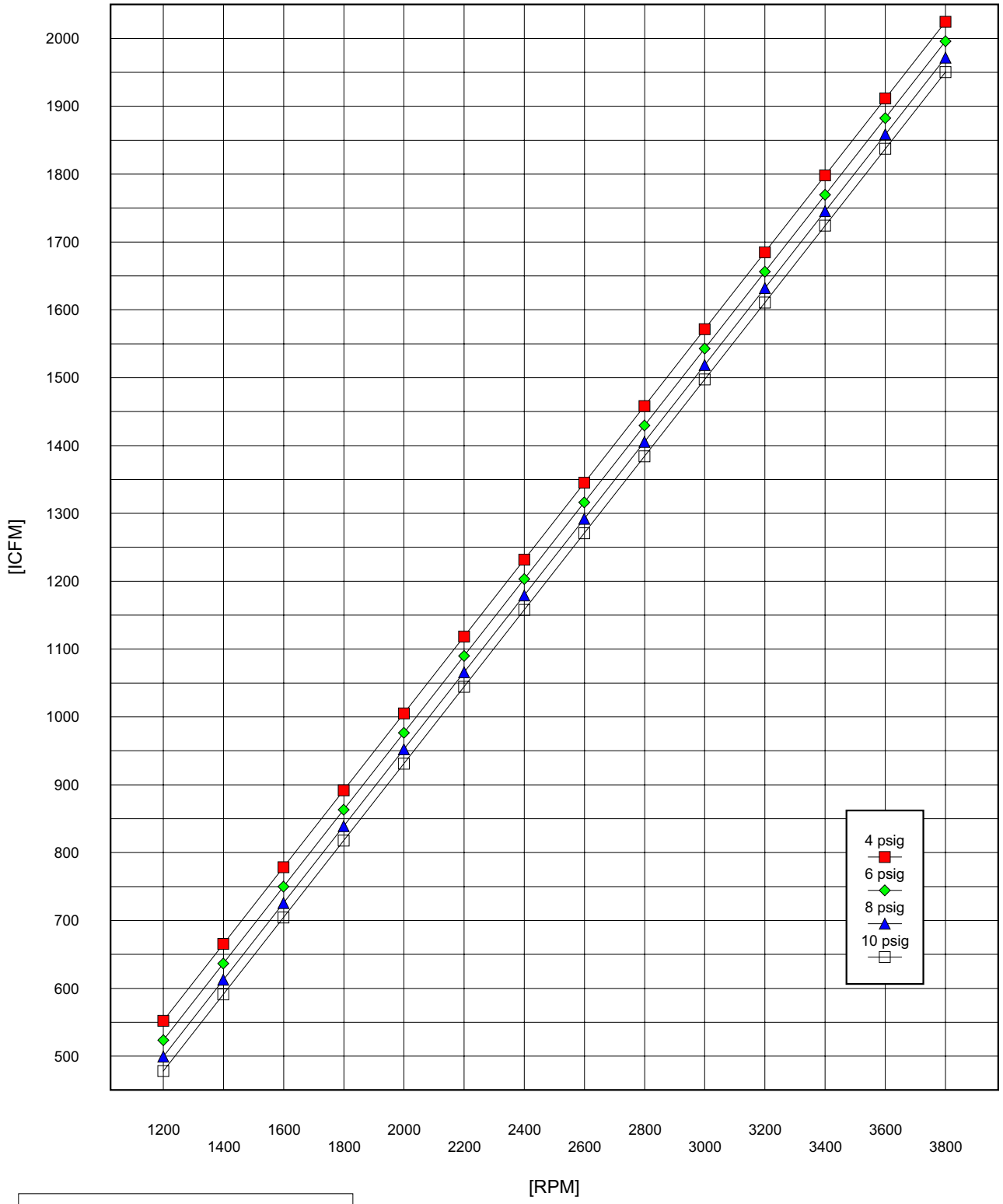

Performance data based on air @ 68 deg.F/ 14.7 psia inlet.

See temperature chart on second sheet for allowable operating range.

AERZEN GM 50L DELTA PACKAGE, PRESSURE

DISCHARGE TEMPERATURE

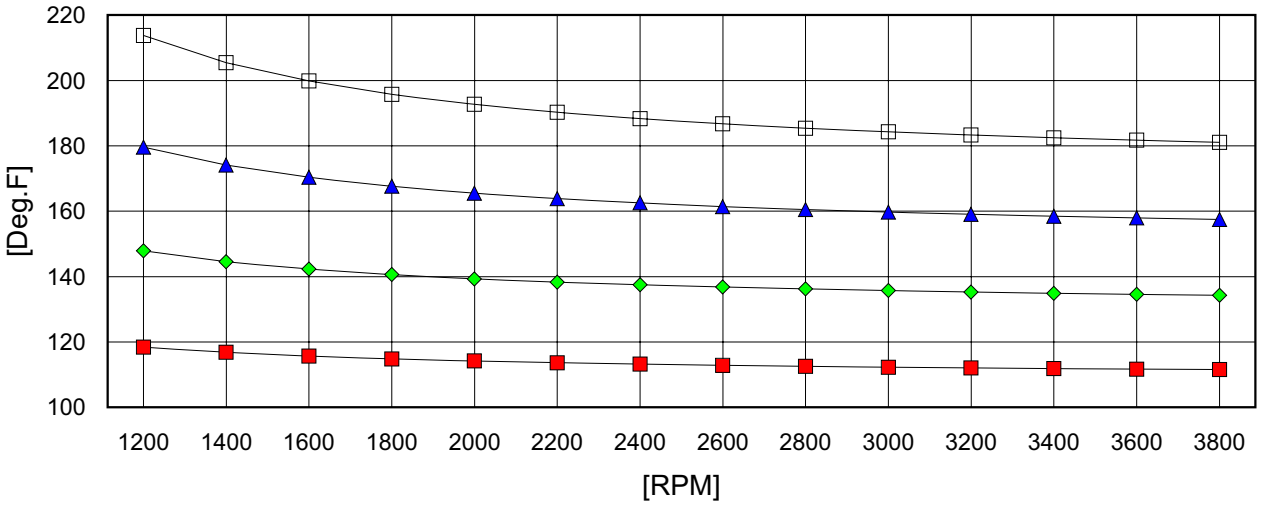

MAXIMUM ALLOWABLE DISCHARGE TEMPERATURE: 285 deg.F
Performance data based on air @ 68 deg.F/ 14.7 psia inlet.

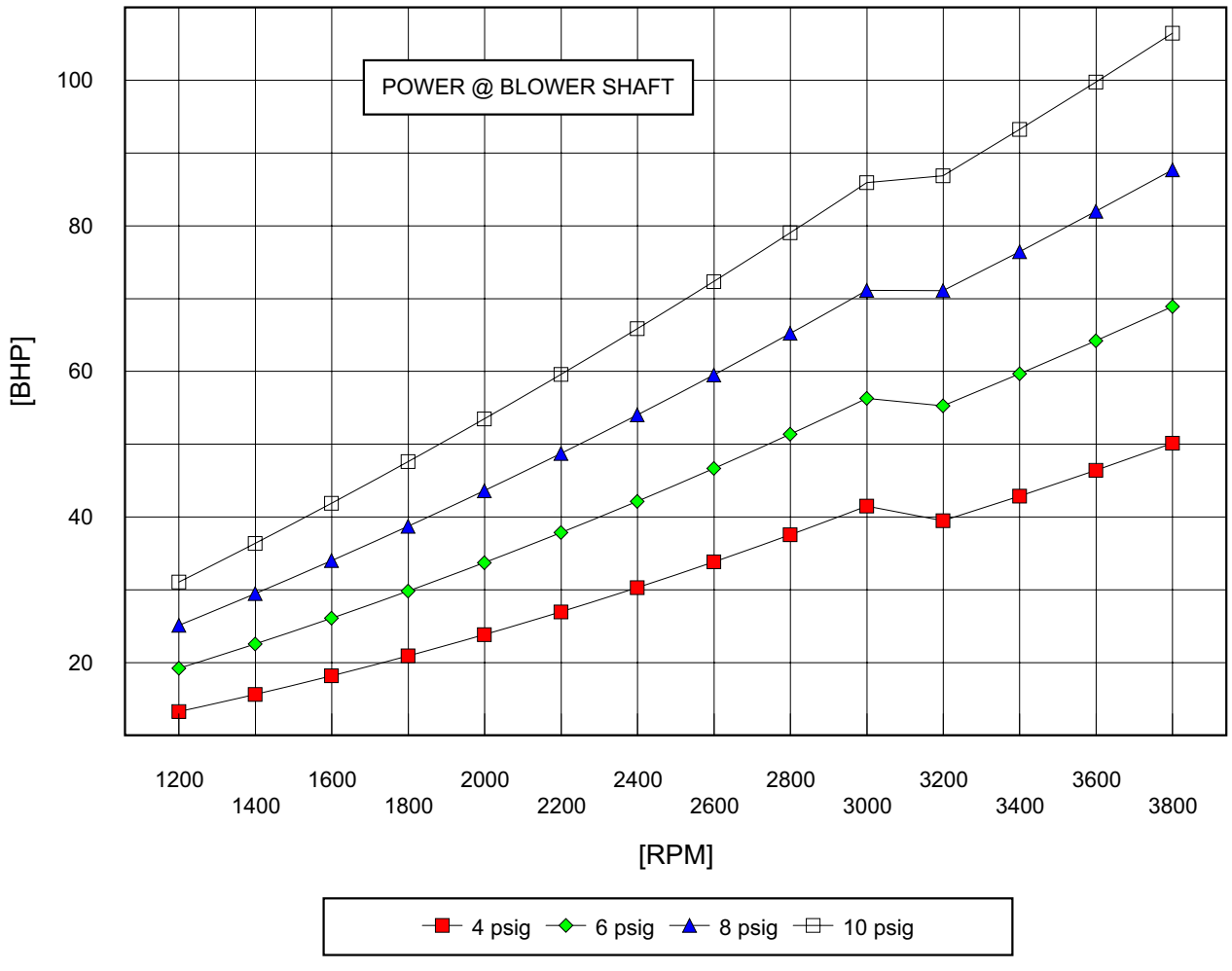

6" (DN 150 accessories) up to 3000 rpm; 8"(DN 200) above>3000 rpm

Aerzener Maschinenfabrik GmbH
Reherweg 28 - D-31855 Aerzen - Telefon (0 51 54) 81 0 - info@aerzener.de - www.aerzener.com

4000323947 | ZTD | 01

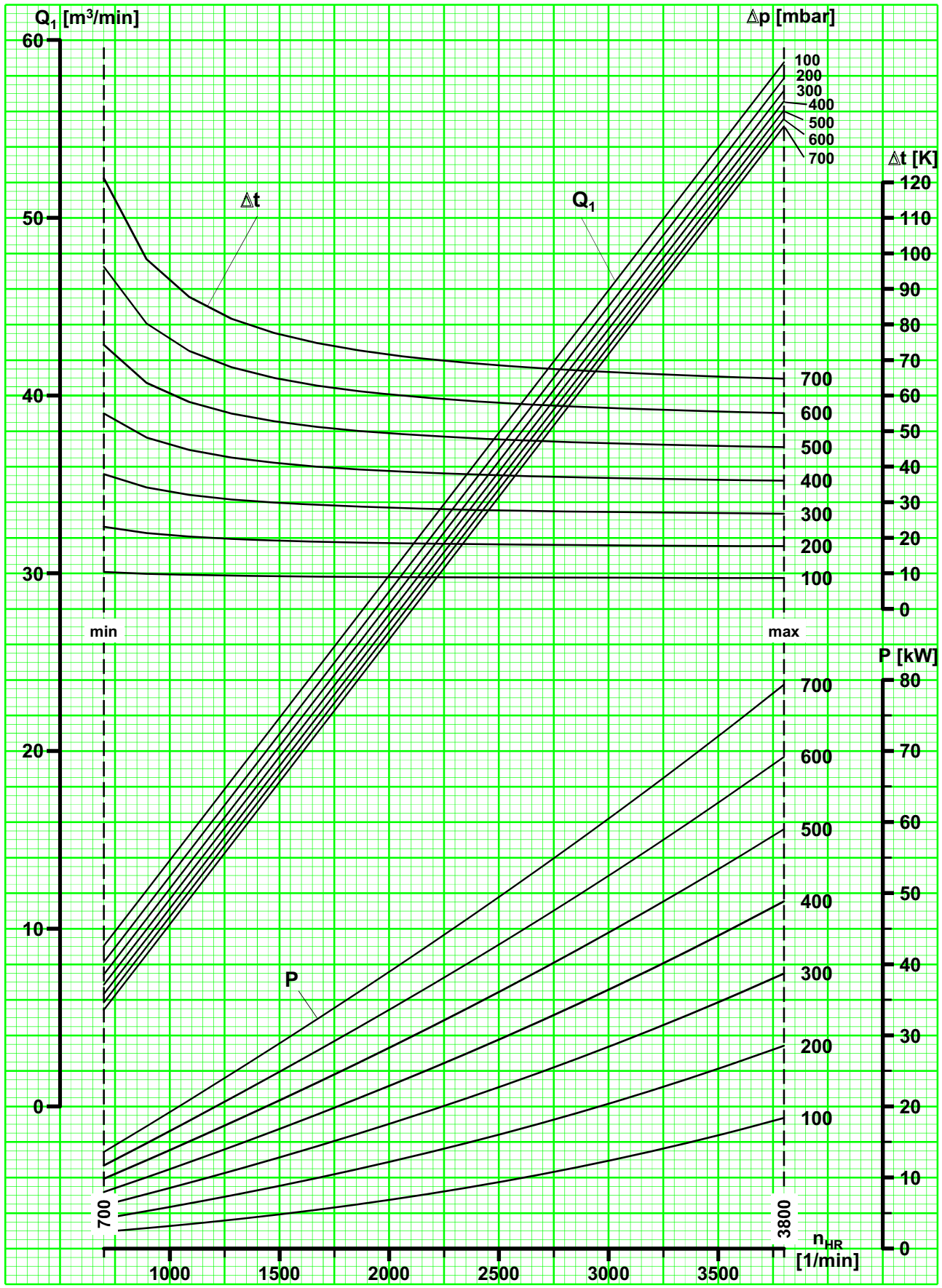

Q_1 : Ansaugvolumenstrom (Luft) bei p_1 = 1,0 bar und t_1 = 20°C	intake volume flow (air) at p_1 = 1.0 bar and t_1 = 20°C	débit aspiré (air) pour p_1 = 1,0 bar et t_1 = 20°C
n_{HR} : Hauptrotordrehzahl	main rotor speed	vitesse du rotor principal
n_V : Antriebswellendrehzahl	drive shaft speed	vitesse de l'arbre d'entraînement
P : Leistungsbedarf an der Kupplung	power required at the coupling	puissance absorbée à l'accouplement
t : Temperaturerhöhung	temperature rise	élévation de température
p : Druckerhöhung	pressure difference	pression différentielle

Leistungsdiagramm - Überdruck - für Drehkolbengebläsestufe
performance diagram - overpressure - for stage of rotary piston blower
courbes de fonctionnement - fonctionnement en pression - pour étage de surpresseur à pistons rotatifs

GM 50 L

nV / nHR = 1	04/2016 TRD / Hallemann	G2-418 - XL SAP 4000323947 - 01

Technical Documentation

PDH0604

Optim TEFC | AEHH8N

Date: June 10, 2022

TECO Westinghouse
MOTORS (CANADA) INC.

Date: June 10, 2022

Dimensional Drawing

Catalogue	Type	HP	RPM	Voltage	Hz	Frame Size
PDH0604	AEHH8N	60	1800	230 / 460	60	364T

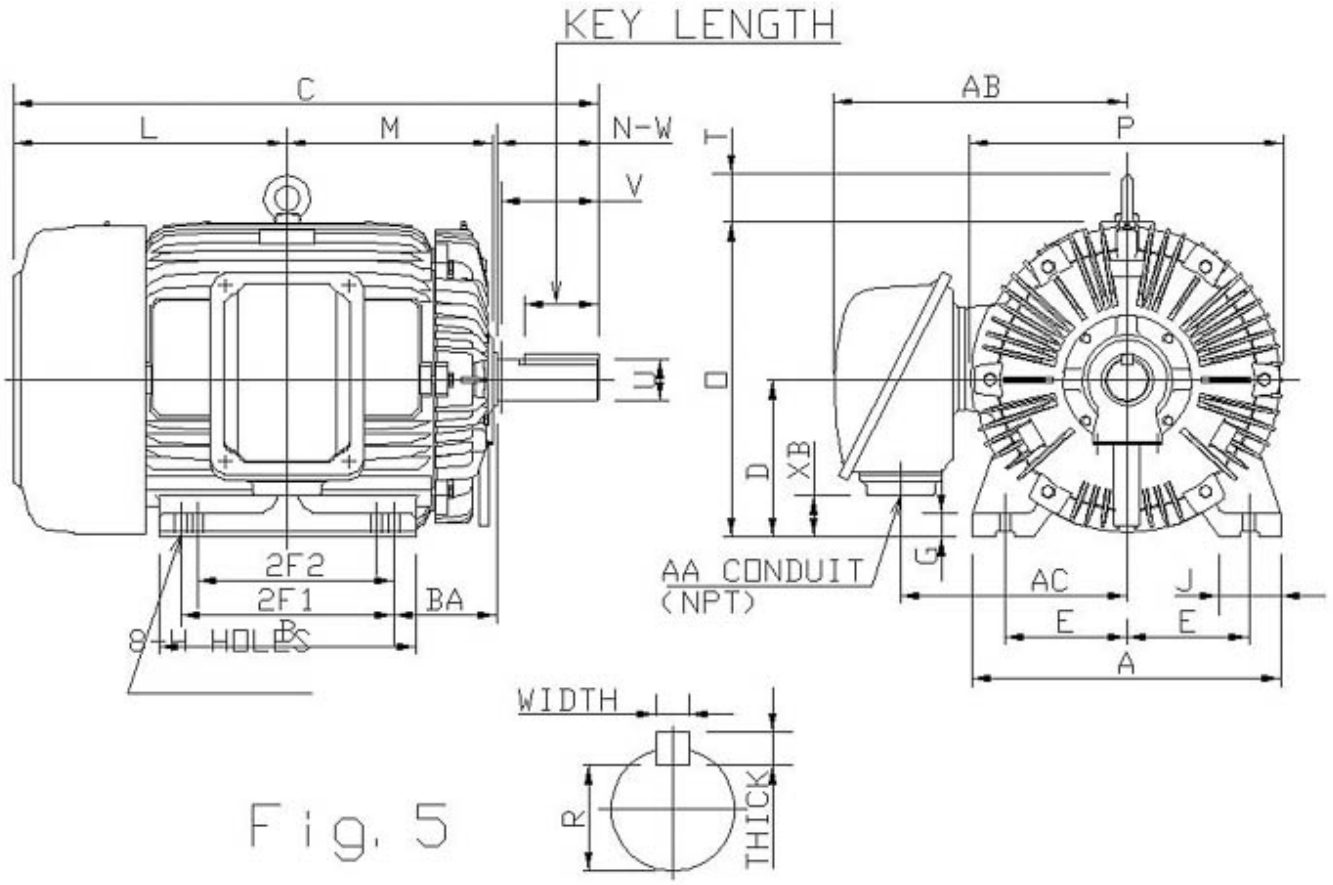

Fig. 5

Mounting					A	B	C	CL1	CL2	D	G
E	2F1	2F2	H	BA							
7	11.25		0.67	5.88	17.7	13.75	32.57			9	1.3

J	K	L	M	O	P	T
3.55		15.19	11.29	18.02	18.03	2.76

Terminal Housing			
AA	AB	AC	XB
3	18.33	13.78	2.39

Shaft Extension			Key			Keyseat
N-W	U	V	Width	Thick	Length	R
5.88	2.375	5.75	0.625	0.625	4.28	2.021

Bearings		Weight Lbs	Drive Method	Dimensions
DE	NDE			
6313	6213	777	Direct Coupling / Belt Drive	Inches

TECO Westinghouse MOTORS (CANADA) INC.

Date: June 10, 2022

Technical Data Sheet

Motor Type: AEHH8N	Catalogue No: PDH0604

Nameplate Information

HP	Pole	RPM	Frame	Voltage	Hz	Phase
60	4	1775	364T	230 / 460	60	3
Enclosure	Ins. Class	Service Factor	Time Rating	NEMA Design	Rated Amb.	Rated Altitude
TEFC	F	1.15	Continuous	C	-40 to 40 °C	<1000 m

Typical Performance

Efficiency (%)				Power Factor (%)		
Full Load		3/4 Load	1/2 Load	Full Load	3/4 Load	1/2 Load
Nom.	Min.					
95	94.1	95	94.5	86.5	83	75.5

Torque				Current (A)		
Full Load (lb-ft)	Locked Rotor (% FLT)	Pull Up (% FLT)	Break Down (% FLT)	No Load	Full Load	Locked Rotor
177.5	200	155	240	37.6 / 18.8	136.8 / 68.4	870 / 435

NEMA KVA Code	Inertia (WR^2)			Safe Stall Time (s)		Noise Level Sound Press. dB(A)
	Rotor ($lb\text{-}ft^2$)	NEMA Load ($lb\text{-}ft^2$)	Max. Allowable ($lb\text{-}ft^2$)	Cold	Hot	
G	12.23	275	486.27	17	12	79

VFD Duty Information

Max HP	Current (A)	Speed Range		VFD		S.F.
		Constant Torque	Variable Torque	Carrier Hz	Type	
60	68.37	6-60Hz	3-60Hz	3-6kHz	VPWM or CPWM	1

Hazardous Locations Information

CSA Certified	
Class I, Div 2, Groups B, C & D Class I, Zone 2, Groups IIB+H2, IIB & IIA	
Temp Code (Sinewave / VFD)	T3 / T3

Additional Certifications

Other Certification

Additional Information

Bearings		Approx. Weight
DE	NDE	lbs
6313	6213	777

TECO Westinghouse MOTORS (CANADA) INC.	
	Date: June 10, 2022

Nameplate Drawing

Optim TEFC

TYPE	AEHH8N	CAT. NO.	PDH0604		
OUTPUT	60 HP 44.76 kW	FRAME	364T	TEFC	
R.P.M.	1775	POLE	4	INS.	F
VOLTS	230 / 460	PHASE	3	Hz	60
AMPS	136.8 / 68.4	CODE	G	S.F.	1.15
AMBIENT	40 °C	NOM. EFF. 95		MIN. EFF. 94.1	
BEARINGS	6313 / 6213			RATING Cont.	

SER. NO.	TBD	DESIGN	C	WT. 777 LBS

PWM VFD DUTY	VT	CT	CP	S.F.
	3-60Hz	6-60Hz	60-90Hz	1

Connection Diagram

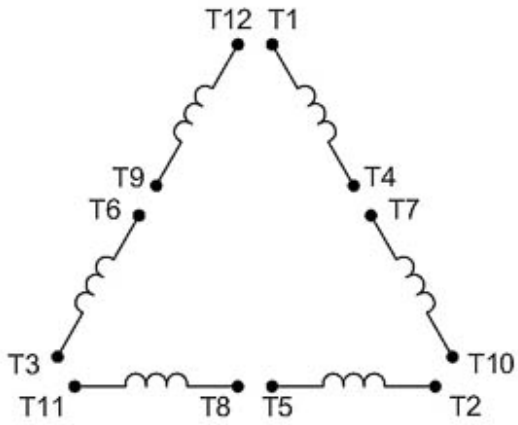

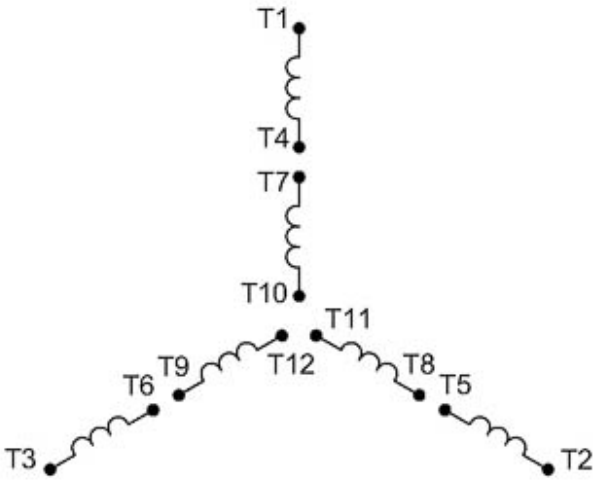

12 LEAD DUAL VOLTAGE WYE/DELTA						
VOLTAGE	CONNECTION		L1	L2	L3	JOIN
HIGH	START	WYE	1	2	3	4&7,5&8,6&9 10&11&12
	RUN	DELTA	1,12	2,10	3,11	4&7,5&8,6&9
LOW	START	2 WYE	1,7	2,8	3,9	4&5&6 10&11&12
	RUN	2 DELTA	1,6,7 12	2,4,8 10	3,5,9 11	

WD_12YD

TECO Westinghouse MOTORS (CANADA) INC.	
	Date: June 10, 2022

Thermal Limit Curves

Motor Type: AEHH8N	Catalogue No: PDH0604	Family: Optim TEFC

HP	60	Safe Stall Time		Full Load A	136.8 / 68.4 A
Voltage	230 / 460V 60Hz	Hot	12 s	% Inrush	636 / 636 %
RPM	1800	Cold	17 s	Locked Rotor A	870 / 435 A

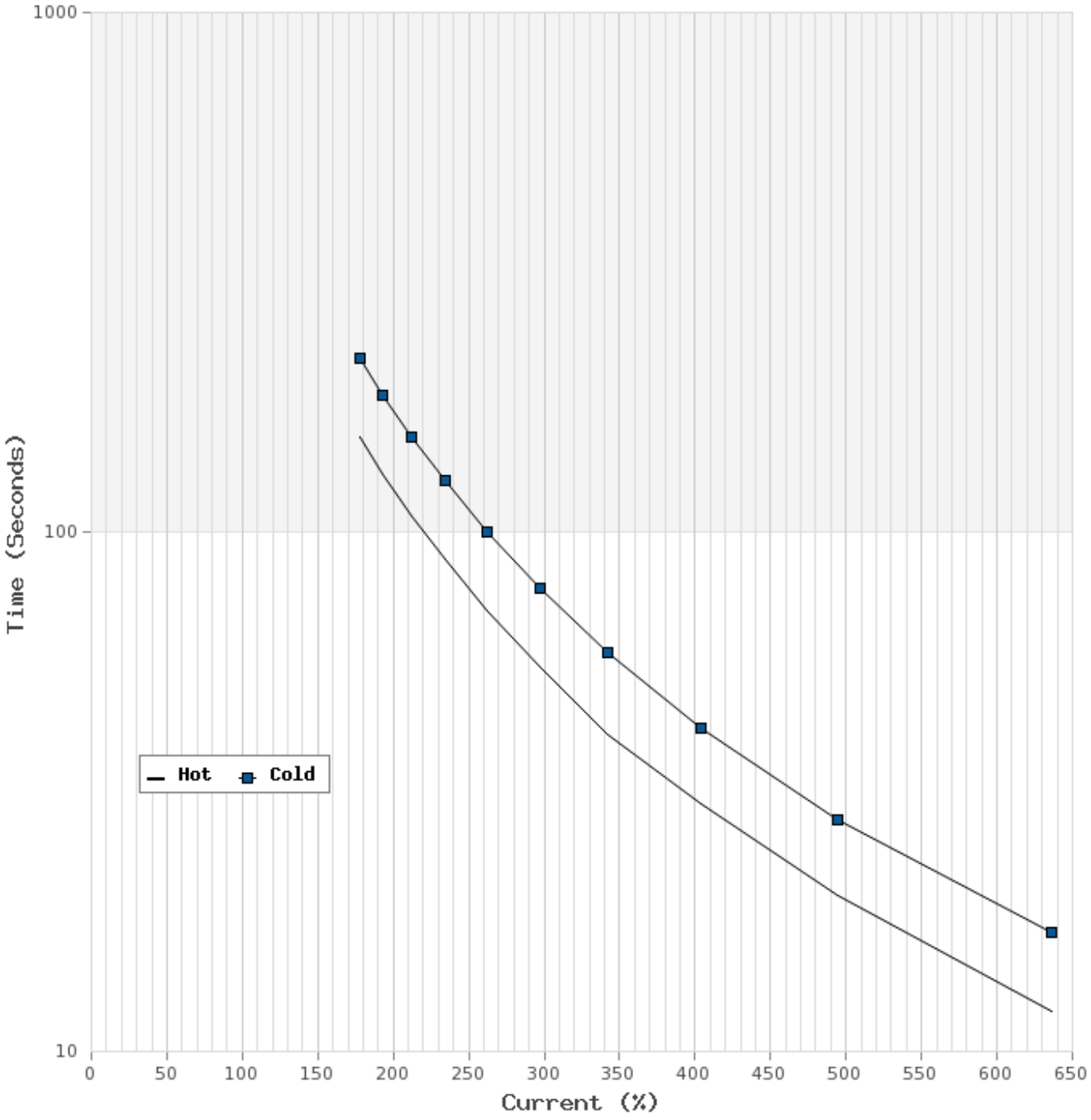

TECO Westinghouse MOTORS (CANADA) INC.	
	Date: June 10, 2022

T-N and I-N Curves

Motor Type: AEHH8N	Catalogue No: PDH0604	Family: Optim TEFC

HP	60	Full Load T	177.5 lb-ft	Full Load A	136.8 / 68.4 A
Voltage	230 / 460V 60Hz	Locked Rotor T	200 %	Locked Rotor A	870.0 / 435.0 A
RPM	1800	Pull Up T	155 %	Break Down T	240 %

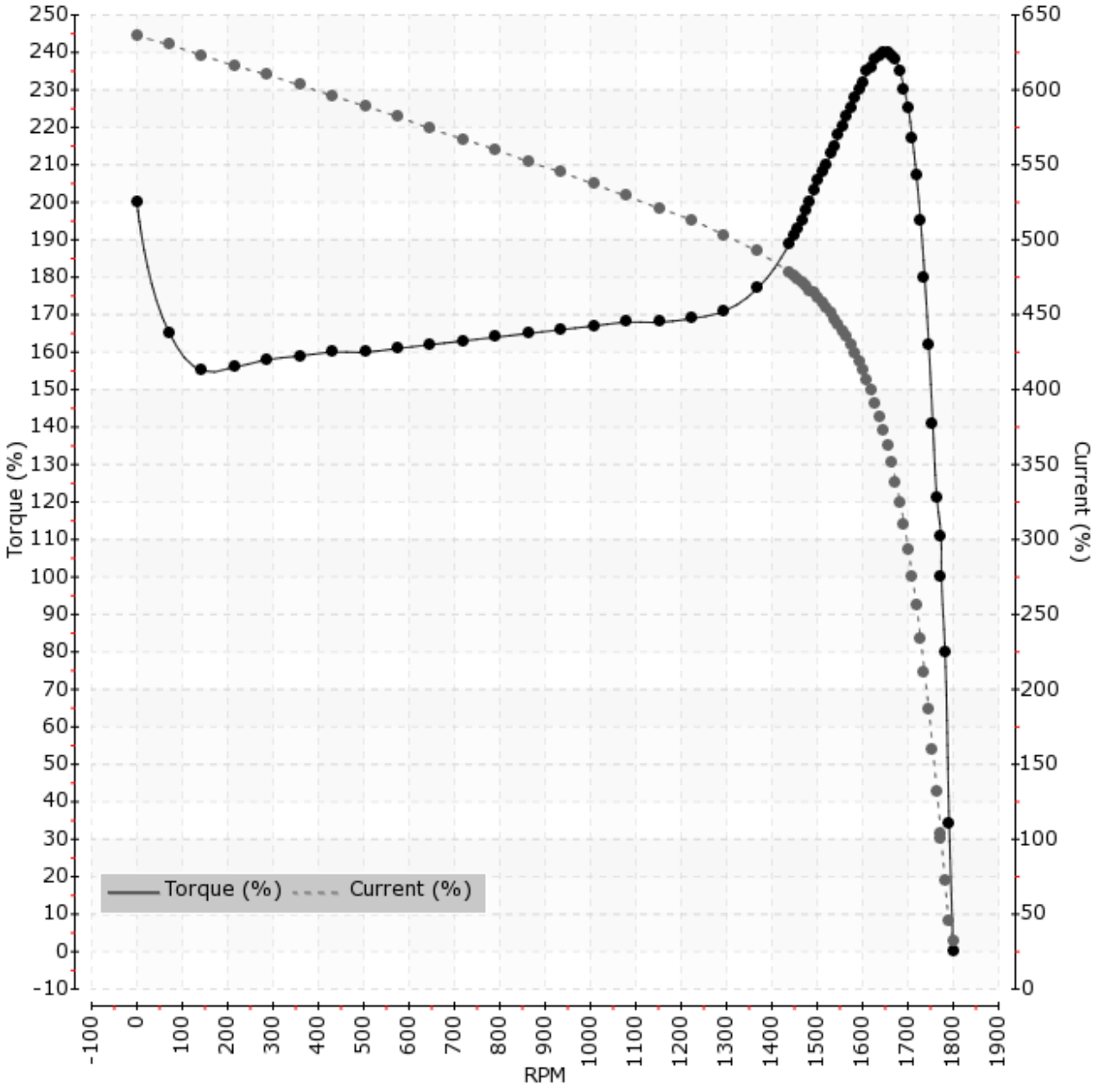

Process Blowers:
Tag: 16-B-401-A/B/C

ROTARY LOBE BLOWERS

DELTA BLOWER GENERATION 5

Intake volume streams from 30 m^3/h to 15,000 m^3/h



AERZEN

THE DELTA BLOWERS. ROBUST, DURABLE MACHINES FOR COUNTLESS COMPRESSOR PROCESSES.



Delta Blower Generation 5

They are the driving force behind countless processes, the heart of a powerful machine assembly: the Delta Generation 5 rotary lobe blowers. They represent the distillation of almost 150 years of AERZEN experience and development work, but are more innovative than ever. AERZEN has packed a number of new features into its latest generation of delta blowers: oil-free conveyance of air and neutral gases; a broad control range for volume streams of from 30 m^3/h to 15,000 m^3/h; reduced life-cycle costs; easy handling; quieter operation. What hasn't changed: the extremely robust, extremely reliable, and extremely durable nature of this global success story. No wonder that their owners are so enthusiastic about putting them into continuous service – year in and year out, decade after decade.


AERZEN
Delta Blower



Applications
- Water and waste water treatment
- Aeration
- Filter backwashing
- Pneumatic conveyance of bulk materials
- Gas conveyance
- Degassing
- Dust removal
- Vacuum production
- Biogas treatment

and many others

Industries
- Sewage treatment
- Chemical and process technology
- Power plants
- Cement and lime
- Foodstuffs
- Paper

and many others

THE UNIVERSAL GENIUS FOR EVERY APPLICATION.

The versatile and compact Delta Blower units can be deployed in any climate zone on Earth. In the most challenging outdoor environments just as safely as in covered indoor spaces. They can be used as both standalone units or in complex assemblies. They are as reliable in earthquake zones as they are aboard ships or in other mobile applications.

Versatility in Detail.
Delta Blowers are powerful all-round geniuses. Miniature units can be mounted on silo vehicles, the largest machines can be used in lifting units. They are used to unload ships – at up to 1,000 tons an hour.

Control range from 25% to 100%

Intake volumes streams from 30 m^3/h to 15,000 m^3/h

Positive pressure up to 1,000 mbar

Nominal widths from DN 50 to DN 400



Indispensable for power plant



Powerful performer for loading and unloading ships

MACHINES AND SERVICES FROM AERZEN. HIGHLY ACCESSIBLE AND AVAILABLE AROUND THE WORLD.

The durability of Delta Blower units is legendary. Just like their proverbial reliability, lifespan, and intelligent operating and maintenance design. Why bring up AERZEN services at all, then? Because service is necessary. And because the service teams we have on call across the globe are an important decision criterion for plant operators: a decision for blowers "made by AERZEN".



The heart of the Delta unit: the triple-lobed AERZEN blower stage

High availability.
The best blower units are the ones you don't notice. Because they do their work reliably, year in and year out. The Delta Blowers from AERZEN are just this kind of unit. There's a reason they have a reputation for robust nature and long service life: AERZEN makes all the components itself. Right down to the control system. From the initial idea through engineering to configuration. Which is how we can guarantee the productivity of our machines. Our contribution to the "made in Germany" quality designation.



A reliable partner – the world over

There for you – the world over.
Typically AERZEN: that our solutions should be so reliably available. That means our machines, of course, but also our services. Our teams will take care of your units throughout their entire operational life, thus helping to protect the value of your investment. And the fact that we have a network of over 40 affiliates and service representatives in more than 100 countries around the world means we're never far away. We can be there for you quickly – when you need us.

AERZEN: always the right choice.
- Commissioning done by qualified personnel
- Individualized training for customer's specialists
- Customer-specific service and maintenance contracts
- Delta-real time monitoring for your unit
- On-site machine modifications (if needed)

Intelligently made.
What do they mean, the terms "compact, easy handling, maintenance-friendly"? These are our promises to you for the day-to-day operation of our products, and they're worth their weight in gold. Some concrete examples:

- Small footprint
- Flexible machine mounts
- Easy to move with a fork lift or pallet truck
- Space-saving side-by-side setup
- Plug and play installation and commissioning
- Easy access to all parts subject to wear
- Oil levels can be checked while machine is in operation
- Maintenance work such as changing oil and filters done from the front of the machine
- Low noise levels
- Belt-driven for optimal volume streams; retrofitting is fast and easy

100% clean.
How can we offer machines that can be used for handling foodstuffs, without the need for extensive cleaning that would interrupt production? By eliminating absorption material in the muffler. AERZEN designed the base support to function as a discharge muffler, reducing noise by air deflection alone. 100% free of absorption material that would otherwise cause wear and contaminate downstream systems. The base supports, by the way, are AERZEN patents and are also certified as spark arresters for use in ATEX applications.



Intelligent noise reduction: the AERZEN discharge muffler with no absorption material

BLOWERS ARE BLOWERS, RIGHT? AN END TO PRECONCEPTIONS.

AERZEN is one of the world's most innovative providers of compressor technology. For over 150 years. And it was almost 150 years ago – 1868, to be exact – that we produced Europe's first rotary lobe blower. Since then we have raised the bar for each generation of this technology. Let yourself be surprised. Discover the extraordinary blowers: the Delta Blower Generation 5.

Extremely robust
- for a broad range of applications in control ranges from 25 to 100%
- many types of possible modifications

Compact design
- space-saving side-by-side setup
- smaller engine rooms

Operation-friendly, low-maintenance design
- high availability in continuous operation under difficult environmental conditions
- control and maintenance from the front of the machine

Plug&play
- pre-configured, parameterized, ready to run
- integrated service package with funnel and initial oil fill

Oil-free per Class 0
- per ISO 8573-1, TÜV certified

No absorption material
- for use in the pneumatic conveyance of bulk food items (no contamination).
- secure, energy-efficient water treatment (no deposits of absorption material on aeration plates, no clogging of filter media, no pressure losses)

Integrated power component (optional)
- frequency inverter, delta-star, direct/soft start
- intelligent AERtronic control

Smart oil system
- oil levels can be checked with the machine running
- readable from outside the machine
- oil instead of grease: bearings lubricated with oil last longer





A plus for the environment
- energy-efficient Class IE3 motors as standard equipment
- intake on the cold side of the unit
- basic unit integrated into a highly efficient machine network with rotary lobe compressors and turbo blowers from AERZEN
- retrofitting is fast and easy

Belt-tensioning hinged motor mounting plate
- fully automatic and maintenance-free belt tensioning
- no need to monitor V-belt tension
- very easy to mount or replace V-belts

Multifunctional hinged motor mounting plate and lifting jack
- safer transport
- easy, secure V-belt installation
- mobile installation (e.g. aboard ship/ in earthquake zones)
- Hinged motor mounting plate as support for heavy motors

Low noise levels
- for easy compliance with noise level regulations near populated areas and production facilities
- minimal noise levels with optimized acoustic hood
- integrated pulsation reduction process (patented AERZEN blower stage)

Approval per PDE guidelines (pressure valve)

ATEX compliant
- AERZEN base plates certified as spark extinguishers for ATEX applications

TÜV-certified zone separation filter

WANT TO KNOW MORE ABOUT WHAT'S INSIDE? DESIGN AND CONSTRUCTION.

It's good to know what all is inside each and every AERZEN Delta blower unit: The wealth of experience of a global market leader. The quality expected of a family firm with a long history of excellence. The goal of providing the best solutions for our customers. And a principle that underlies thousands and thousands of successful applications: Roots.

Innovative pulsation reduction.
AERZEN has developed a unique process especially for the Delta Blower series and integrated it into all its models: pulsation reduction. This patented AERZEN process prevents disruptions in the machine even before they arise. The triple-lobed rotors in the Delta blowers have two channels cast in the cylinder. These channels control backflow into the conveyance chamber to eliminate the blowback and crimping impulses that were typical of double-lobed blowers. A patented interference process that means an end to pulsation.

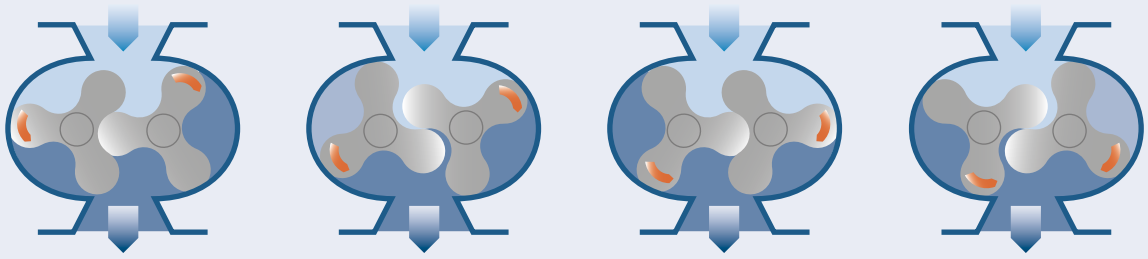

Conveyance process in AERZEN blowers

Intelligent technical details are your guarantee for the lasting value of the Delta blowers. One example from among many: the patented pulsation reduction process, an AERZEN innovation that increases the lifespan of the bearings.

The inner values are what count: a view into an AERZEN blower

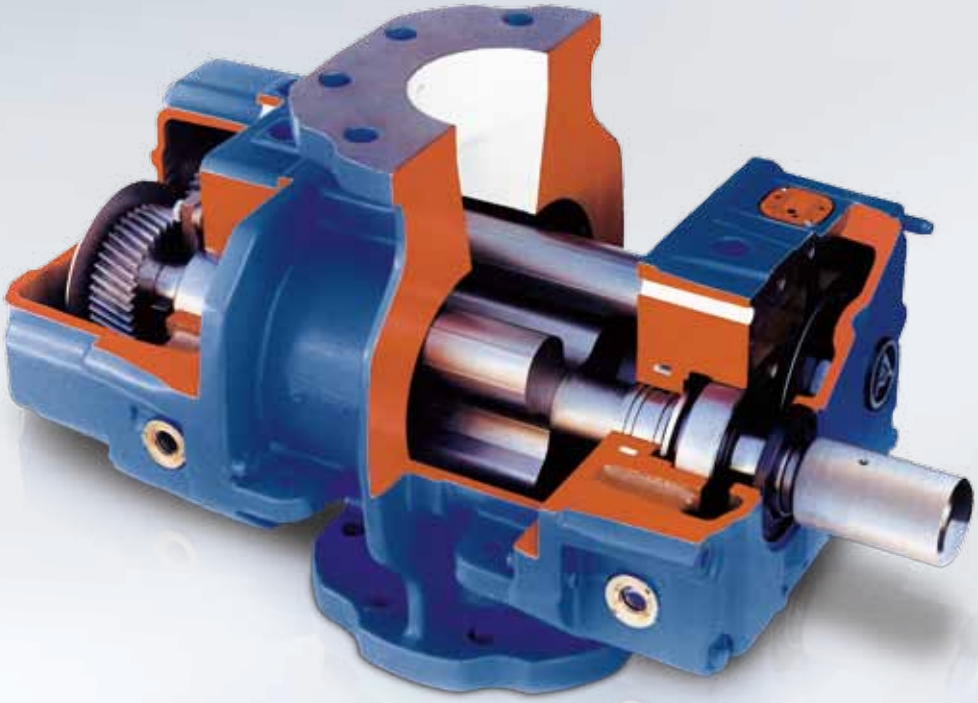

Blower stage
- Triple-lobed blower with integrated pulsation reduction
- Housing: cylinder (with two integrated, pressure-side pre-inlet channels to reduce noise through pulsation reduction), wheel well, housing lid, and side plates
- Made of EN-GJL-200
- Ribbed surface

Rotors

Models GM 3 S to GM 80 L:
- Rotors and shafts drop forged from C45N

Models GM 90 S and GM 30 L:
- Rotors and shaft drop forged from EN-GJS-500-7

Models GM 150 S to GM 240 S:
- Rotors made of EN-GJS-400-18-LT, shafts of C45N

Drive type
- Overhung via narrow V-belt
- Direct drive

Cooling
- Convection cooling

Lubrication
- Oil bath for bearings and timing gears

Oil-free conveyance
- Oil-free operation per ISO 8573-1 Class 0 is guaranteed by using proven piston ring labyrinth seals combined with neutral chambers (open to the atmosphere)

Timing gears
- Made of case-hardening steel, hardened and ground, with helical gears
- Attached to the shaft via taper interference fit
- Extremely smooth running, very long operational life

EXCEEDING STANDARDS. AERZEN DELIVERABLES.

Some do comfortable. Others do efficient. We do both. When your Delta Blower unit is delivered, it comes completely configured, parameterized, ready to plug and run. Designed especially for your processes, of course. And including all the standardized accessories and components you'll need for flawless operation at the push of a button.

The AERZEN "All-in" concept: Standard deliverables.



1 **Triple-lobe blower stage**
- with integrated pulsation reduction (see page 10/11)

2 **Base plate with integrated discharge muffler**
- Certified as ATEX spark arrester per EU guideline 1999/92/EC
- Muffler free of absorption material



3 **Intake muffler with integrated air filter**
- Normal intake from the surrounding area
- Conduit intake optional

4 **Flexible rubber bushing**
- With clamps

5 **Flexible machine mounts**
- To decouple machine-borne noise



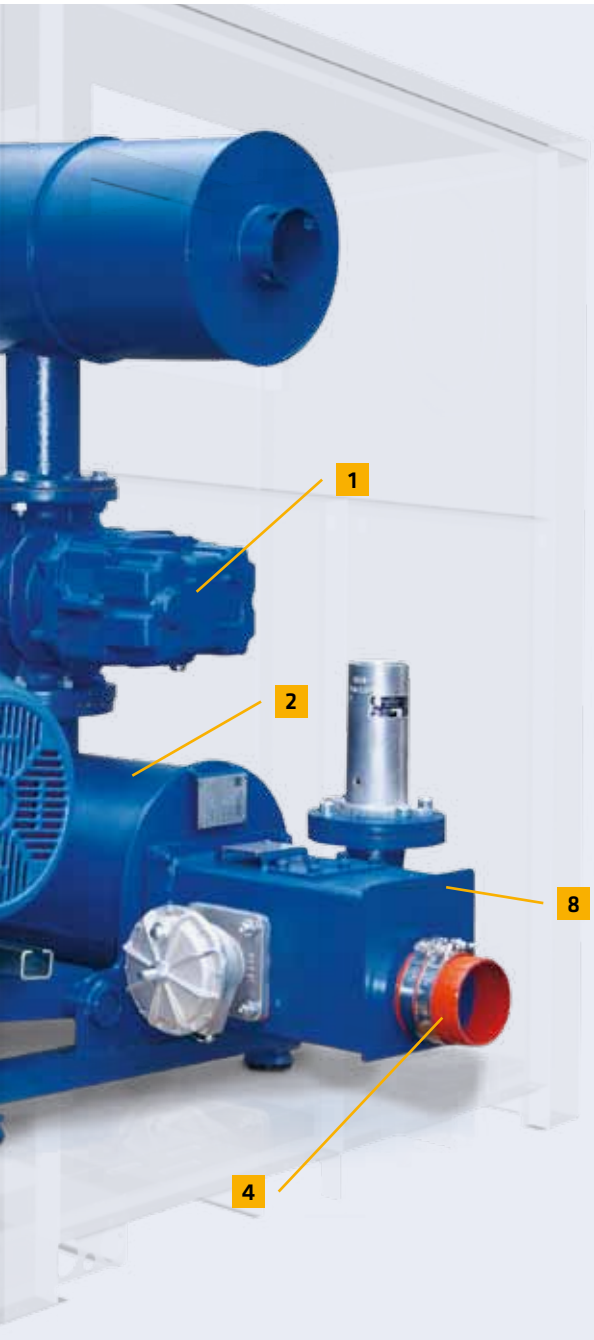



6 **Motor**

- High-performance narrow V-belt drive with three-phase AC motor
- Energy-efficient Class IE3 motors (up to motor size 315) as standard equipment



7 **Hinged motor mounting plate**

- Automatic V-belt tensioning
- Multifunctional hinged motor mounting plate and lifting jack

8 **Terminal box**

- With pressure valve (8) per PED guideline 97/23/EC
- built-in non-return flap

9 **Instrumentation**

- Pressure gauge for displaying conveying pressure
- Maintenance indicator for monitoring intake filter

Added value: Accessory components.

- Acoustic hood for indoor and outdoor installation, force-air ventilated via mechanical filter
- Startup load relief (10), needed with delta-star motor startup
- Pressure-side axial compensator in place of flexible rubber bushing
- Control cabinet: delta-star, frequency inverter, soft-starter
- AERZEN AERtronic blower control
- Additional accessories on demand



AERZEN startup load relief

Modifications.

- Special motors
- Special finishes
- ATEX-compliant design
- Acoustic hood with special sand collector for use in desert locations
- Acoustic hood for low temperatures (to -40° C) with heater and gravity-activated blinds
- Acoustic hood for earthquake safety and increased wind resistance
- For use aboard ships and in motor vehicles
- For conveying specialty gases by using specialized materials
- Customer-specific documentation



Always a safe choice: ATEX-compliant AERZEN design

Efficient control.

AERtonic is easy to use. But above all, AERZEN's control system is an important part of the unit's safety design: it guarantees that your facility will be operating at optimal efficiency levels at all times. The AERtronic offers a broad spectrum of functions. It can visualize operational data, run the operating hours counter, provide early notifications of operational events, and save all this information in memory. AERtronic will also keep you informed about upcoming maintenance and service cycles, meaning that service calls can be planned for more efficiently, helping to increase the lifespan of your machine's components significantly.



WEIGHTY ADVANTAGES. IN A LEAN MACHINE.

Dimensions and weights (Technical data subject to change – Products subject to technical alteration).

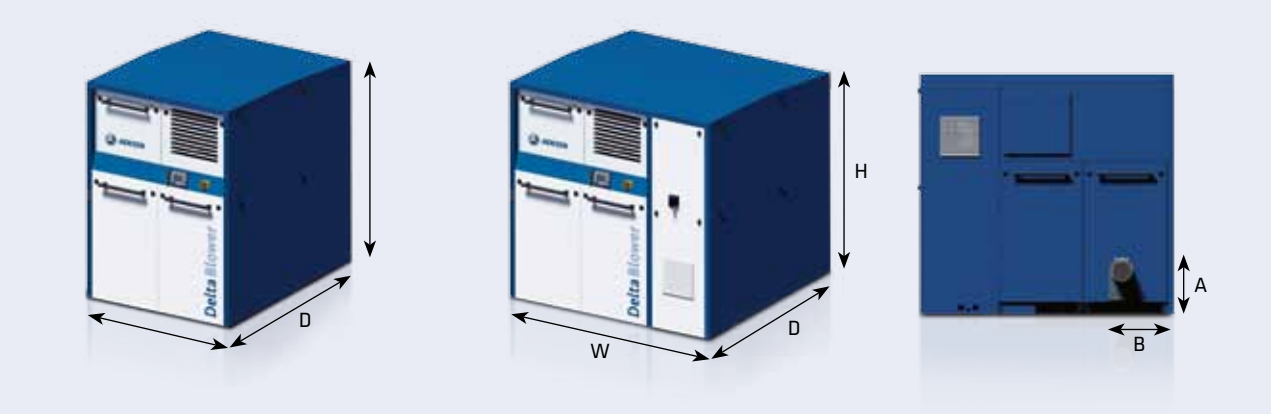

Delta Blower.

Model	H	D	W	A	B	Nozzle size DN	Weight without acoustic hood	Weight with acoustic hood
3 S	1055	800	800	228	245	50	148 kg	212 kg
4 S	1280	1135	925	258	258	80	207 kg	299 kg
7 L	1280	1135	925	258	258	80	212 kg	304 kg
10 S	1280	1135	925	258	258	80	236 kg	328 kg
10 S	1500	1350	1250	294	375	100	336 kg	496 kg
15 L	1500	1350	1250	294	375	100	351 kg	511 kg
25 S	1500	1350	1250	294	375	125	407 kg	567 kg
30 L	1900	1800	1500	356	435	150	690 kg	1020 kg
35 S	1900	1800	1500	356	435	150	780 kg	1110 kg
50 L	1900	1800	1500	356	435	150	830 kg	1160 kg
50 L	2111	2055	1700	357	525	200	905 kg	1475 kg
60 S	2111	2055	1700	357	525	200	1035 kg	1605 kg
80 L	2308	2200	1900	456	600	250	1550 kg	2200 kg
90 S	2308	2200	1900	456	600	250	1620 kg	2270 kg
130 L	2345	2850	2100	410	635	300	2436 kg	3410 kg
150 S	2345	2850	2100	410	635	300	2796 kg	3750 kg
220 L	3500	4304	2800	410	800	400	4981 kg	8240 kg
240 S	3500	4304	2800	410	800	400	5371 kg	8630 kg

Weights without motor and belt drive

Delta Blower with integrated power supply.

Model	H	D	W	A	B	Nozzle size DN	Weight with acoustic hood
10 S	1500	1350	1850	294	375	100	619 kg
15 L	1500	1350	1850	294	375	100	661 kg
25 S	1500	1350	1850	294	375	125	717 kg
30 L	1900	1800	2100	356	435	150	1322 kg
35 S	1900	1800	2100	356	435	150	1412 kg
50 L	1900	1800	2100	356	435	150	1462 kg
50 L	2111	2055	2300	357	525	200	1825 kg
60 L	2111	2055	2300	357	525	200	1955 kg

Weights without motor, electrical equipment, and belt drive

BLOWER POWER IN DETAIL. THE PERFORMANCE TABLES.

The Delta rotary lobe blowers are high-performance products. They were designed for use in many different areas of application: 16 models in 9 nominal widths from DN 50 to DN 400, intake volume streams from about 30 to 15,000 m^3/h, positive pressures up to 1,000 mbar, negative pressures down to -500 mbar.

Noise values.
The sound pressure levels from machine noise (Lp(A)) per individual unit are based measurements taken outdoors at a distance of 1 M from the exterior of the machine (tolerance of ± 2 dB). Noise measurement per DIN 45 635, DIN ISO 3744 and DIN EN ISO 2151.

Using the performance tables.
You will find all the important performance data for the Delta series in the performance tables: intake volume stream ($\dot{V}1$), required coupling power (Pk), motor size and noise level (Lp(A)). The intake volumes shown are based on commonly available belt drive ratios in increments of about 12%. Lower drive speeds are also possible, depending on the final temperature.

Parameters.

$\dot{V}1$	[m^3/min]	Intake volume stream
p1	[bar abs]	Intake pressure
Δp	[mbar]	Pressure differential
t_1	[°C]	Intake temperature
t_2	[°C]	Final temperature
nG	[rpm]	Blower rotational speed
nM	[rpm]	Motor rotational speed
Pk	[kW]	Shaft power
P_{mot}	[kW]	Nominal motor power
Lp(A) o. H.	[dB]	Noise pressure level for blower unit without hood
Lp(A) m. H.	[dB]	Noise pressure level for blower unit with hood

Delta Blower is the driving force in countless processes. There is a good reason for the exceptional range of applications: the robust power units from AERZEN can be configured for just about any requirement, even in standard implementations.

Δp mbar	Blower size		GM 3 S / DN 50										GM 4 S / DN 80								
300	$\dot{V}_1$	[m³/min]	**0.66**	**1.1**	**1.61**	**2.13**	**2.48**	**2.94**	**3.18**	**3.66**	**3.87**	**4.12**	**1.01**	**1.66**	**2.17**	**3**	**3.54**	**4.16**	**4.78**	**5.41**	**5.7**
	t_2	[°C]	74	62	57	54	53	52	51	50	50	50	68	59	56	53	52	51	50	49	49
	nG	[rpm]	1400	1830	2330	2840	3190	3640	3880	4350	4560	4800	1400	1870	2240	2840	3230	3680	4130	4590	4800
	nM	[rpm]	2800	2800	2800	2840	2840	2840	2870	2870	2870	2890	2800	2800	2840	2840	2870	2870	2890	2890	2890
	Pk	[kW]	0.89	1.14	1.43	1.76	2.01	2.34	2.54	2.94	3.13	3.37	1.14	1.49	1.78	2.29	2.64	3.06	3.52	4.01	4.25
	P_{mot}	[kW]	1.5	1.5	2.2	3	3	3	4	4	4	5.5	1.5	2.2	3	3	4	4	5.5	5.5	5.5
	Motor size		90 S	90 S	90 L	100 L	100 L	100 L	112 M	112 M	112 M	132 S	90 S	90 L	100 L	100 L	112 M	112 M	132 S	132 S	132 S
	Lp(A)[dB]	w/o.H./w.H.	78/<65	80/<65	83/66	87/66	87/66	89/66	90/67	92/67	93/67	93/66	77/<65	78/<65	79/<65	79/<65	84/<65	86/<65	87/<65	88/<65	89/<65
400	$\dot{V}_1$	[m³/min]	**0.55**	**0.98**	**1.53**	**2.01**	**2.4**	**2.86**	**3.07**	**3.57**	**3.79**	**4**	**0.87**	**1.5**	**2.21**	**2.9**	**3.42**	**4.06**	**4.64**	**5.27**	**5.56**
	t_2	[°C]	107	83	73	68	66	64	63	62	61	61	94	77	70	66	64	62	61	60	60
	nG	[rpm]	1400	1830	2370	2840	3220	3680	3880	4380	4590	4800	1400	1860	2370	2870	3250	3710	4130	4590	4800
	nM	[rpm]	2800	2800	2840	2840	2870	2870	2870	2890	2890	2890	2800	2840	2840	2870	2890	2890	2890	2890	2890
	Pk	[kW]	1.13	1.45	1.86	2.24	2.57	3	3.19	3.71	3.94	4.18	1.46	1.91	2.43	2.97	3.4	3.94	4.47	5.07	5.35
	P_{mot}	[kW]	1.5	2.2	3	3	4	4	4	5.5	5.5	5.5	2.2	3	3	4	5.5	5.5	5.5	7.5	7.5
	Motor size		90 S	90 L	100 L	100 L	112 M	112 M	112 M	132 S	132 S	132 S	90 L	100 L	100 L	112 M	132 S	132 S	132 S	132 S	132 S
	Lp(A)[dB]	w/o.H./w.H.	80/<65	81/<65	84/66	87/66	87/67	90/67	91/67	93/67	94/67	94/67	77/<65	79/<65	81/<65	83/<65	85/<65	87/<65	88/<65	89/<65	89/<65
500	$\dot{V}_1$	[m³/min]		**0.91**	**1.43**	**1.94**	**2.29**	**2.78**	**3.04**	**3.47**	**3.68**	**3.9**	**0.77**	**1.42**	**2.11**	**2.8**	**3.3**	**3.93**	**4.51**	**5.14**	**5.43**
	t_2	[°C]		107	91	83	80	77	75	74	73	72	126	97	85	80	77	75	73	72	71
	nG	[rpm]		1860	2370	2870	3220	3700	3960	4380	4590	4800	1420	1890	2390	2890	3250	3710	4130	4590	4800
	nM	[rpm]		2840	2840	2870	2870	2890	2890	2890	2890	2890	2840	2840	2870	2890	2890	2890	2890	2890	2890
	Pk	[kW]		1.78	2.26	2.76	3.12	3.64	3.94	4.45	4.72	4.99	1.81	2.38	3	3.66	4.15	4.8	5.42	6.12	6.45
	P_{mot}	[kW]		3	3	4	4	5.5	5.5	5.5	7.5	7.5	3	3	4	5.5	5.5	7.5	7.5	7.5	7.5
	Motor size			100 L	100 L	112 M	112 M	132 S	132 S	132 S	132 S	132 S	100 L	100 L	112 M	132 S	132 S	132 S	132 S	132 S	132 S
	Lp(A)[dB]	w/o.H./w.H.		83/65	85/66	88/67	88/67	91/68	93/68	95/67	95/67	95/68	77/<65	80/<65	82/<65	85/66	87/65	88/<65	90/<65	89/<65	89/66
600	$\dot{V}_1$	[m³/min]			**1.36**	**1.84**	**2.26**	**2.69**	**2.95**	**3.38**	**3.59**	**3.8**		**1.33**	**2.02**	**2.69**	**3.39**	**3.82**	**4.4**	**5.11**	**5.32**
	t_2	[°C]			110	99	94	90	88	86	85	84		119	103	95	90	87	85	83	83
	nG	[rpm]			2390	2870	3280	3700	3960	4380	4590	4800		1910	2410	2890	3400	3710	4130	4650	4800
	nM	[rpm]			2870	2870	2890	2890	2890	2890	2890	2890		2870	2890	2890	2890	2890	2890	2930	2930
	Pk	[kW]			2.69	3.24	3.74	4.27	4.61	5.19	5.49	5.8		2.84	3.58	4.32	5.14	5.65	6.37	7.29	7.56
	P_{mot}	[kW]			4	4	5.5	5.5	7.5	7.5	7.5	7.5		4	5.5	5.5	7.5	7.5	7.5	11	11
	Motor size				112 M	112 M	132 S	132 S	132 S	132 S	132 S	132 S		112 M	132 S	132 S	132 S	132 S	132 S	160 M	160 M
	Lp(A)[dB]	w/o.H./w.H.			87/66	89/67	89/68	92/68	95/68	96/68	96/68	96/68		81/<65	84/<65	87/68	87/67	88/66	91/66	89/66	89/67
700	$\dot{V}_1$	[m³/min]			**1.27**	**1.78**	**2.17**	**2.6**	**2.86**	**3.29**	**3.5**	**3.72**			**1.92**	**2.58**	**3.28**	**3.71**	**4.37**	**5.01**	**5.22**
	t_2	[°C]			132	117	110	105	102	99	98	97			122	111	104	101	97	95	94
	nG	[rpm]			2390	2890	3280	3700	3960	4380	4590	4800			2410	2890	3400	3710	4190	4650	4800
	nM	[rpm]			2870	2890	2890	2890	2890	2890	2890	2890			2890	2890	2890	2890	2930	2930	2930
	Pk	[kW]			3.09	3.76	4.29	4.9	5.28	5.93	6.27	6.62			4.14	4.99	5.92	6.5	7.43	8.35	8.66
	P_{mot}	[kW]			4	5.5	5.5	7.5	7.5	7.5	7.5	7.5			5.5	7.5	7.5	7.5	11	11	11
	Motor size				112 M	132 S	132 S	132 S	132 S	132 S	132 S	132 S			132 S	132 S	132 S	132 S	160 M	160 M	160 M
	Lp(A)[dB]	w/o.H./w.H.			87/67	90/67	90/68	93/69	94/69	95/69	95/69	96/68			85/<6	89/68	86/68	89/67	93/67	90/68	89/69
800	$\dot{V}_1$	[m³/min]					**2.1**	**2.52**	**2.78**	**3.21**						**2.48**	**3.26**	**3.68**	**4.28**	**4.91**	**5.12**
	t_2	[°C]					126	120	117	113						128	118	114	111	107	107
	nG	[rpm]					3290	3700	3960	4380						2890	3450	3760	4190	4650	4800
	nM	[rpm]					2890	2890	2890	2890						2890	2930	2930	2930	2930	2930
	Pk	[kW]					4.86	5.52	5.95	6.68						5.65	6.81	7.46	8.4	9.42	9.77
	P_{mot}	[kW]					7.5	7.5	7.5	7.5						7.5	11	11	11	11	11
	Motor size						132 S	132 S	132 S	132 S						132 S	160 M	160 M	160 M	160 M	160 M
	Lp(A)[dB]	w/o.H./w.H.					91/68	94/69	93/69	94/70							87/68	91/68	95/68	91/70	90/70
900	$\dot{V}_1$	[m³/min]							**2.71**								**3.17**	**3.59**	**4.19**	**4.82**	**5.03**
	t_2	[°C]							132								133	129	124	120	119
	nG	[rpm]							3960								3450	3760	4190	4650	4800
	nM	[rpm]							2890								2930	2930	2930	2930	2930
	Pk	[kW]							6.63								7.6	8.33	9.36	10.5	10.9
	P_{mot}	[kW]							7.5								11	11	11	15	15
	Motor size								132 S								160 M	160 M	160 M	160 M	160 M
	Lp(A)[dB]	w/o.H./w.H.							94/70								88/69	92/69	96/69	92/70	92/70
1000	$\dot{V}_1$	[m³/min]																		**4.74**	**4.94**
	t_2	[°C]																		133	132
	nG	[rpm]																		4650	4800
	nM	[rpm]																		2930	2930
	Pk	[kW]																		11.6	12
	P_{mot}	[kW]																		15	15
	Motor size																			160 M	160 M
	Lp(A)[dB]	w/o.H./w.H.																		94/70	94/70

Lower differential pressures on request. Performance data are non-binding examples only.

Δp mbar	Blower size		GM 7 L / DN 80									GM 10 S / DN 80						GM 10 S / DN 100		
300	$\dot{V}_1$	[m³/min]	1.54	2.56	3.59	4.63	5.35	6.35	7.19	7.71	8.21	2.59	3.96	5.36	6.7	7.68	9.03	10.3	11	11.6
	t_2	[°C]	67	58	55	52	51	50	50	50	49	59	54	52	50	50	49	48	48	48
	nG	[rpm]	1400	1890	2390	2890	3240	3720	4130	4380	4620	1420	1910	2410	2890	3240	3720	4190	4440	4650
	nM	[rpm]	2800	2840	2870	2890	2890	2890	2890	2890	2890	2840	2870	2890	2890	2890	2890	2930	2930	2930
	Pk	[kW]	1.64	2.19	2.78	3.42	3.89	4.59	5.25	5.67	6.1	2.29	3.06	3.88	4.72	5.37	6.36	7.43	8.05	8.61
	P_{mot}	[kW]	2.2	3	4	5.5	5.5	7.5	7.5	7.5	7.5	3	4	5.5	7.5	7.5	7.5	11	11	11
	Motor size		90 L	100 L	112 M	132 S	132 S	132 S	132 S	132 S	132 S	100 L	112 M	132 S	132 S	132 S	132 S	160 M	160 M	160 M
	Lp(A)[dB]	w/o.H./w.H.	80/<65	82/<65	83/<65	85/68	85/67	88/66	89/66	89/<65	89/66	76/<65	78/69	80/66	82/65	84/65	86/66	91/71	91/71	92/71
400	$\dot{V}_1$	[m³/min]	1.38	2.39	3.42	4.42	5.14	6.14	7.11	7.63	8.14	2.41	3.8	5.14	6.49	7.58	8.95	10.1	10.8	11.4
	t_2	[°C]	92	75	69	65	64	62	61	60	60	76	68	64	62	61	59	59	58	58
	nG	[rpm]	1420	1910	2410	2890	3240	3720	4190	4440	4690	1435	1930	2410	2890	3280	3770	4190	4440	4650
	nM	[rpm]	2840	2870	2890	2890	2890	2890	2930	2930	2930	2870	2890	2890	2890	2930	2930	2930	2930	2930
	Pk	[kW]	2.16	2.87	3.64	4.41	5.01	5.88	6.79	7.31	7.85	2.99	3.99	5	6.07	6.98	8.23	9.39	10.1	10.8
	P_{mot}	[kW]	3	4	5.5	5.5	7.5	7.5	11	11	11	4	5.5	7.5	7.5	11	11	11	15	15
	Motor size		100 L	112 M	132 S	132 S	132 S	132 S	160M	160M	160M	112 M	132 S	132 S	132 S	160 M	160 M	160 M	160 M	160 M
	Lp(A)[dB]	w/o.H./w.H.	80/<65	82/<65	84/<65	86/68	86/68	89/67	90/67	90/67	91/68	77/<65	78/70	80/67	83/66	84/66	87/67	91/70	92/71	93/70
500	$\dot{V}_1$	[m³/min]	1.22	2.18	3.24	4.23	5.31	6.05	6.92	7.44	7.96	2.25	3.61	4.95	6.41	7.39	8.76	9.94	10.6	11.2
	t_2	[°C]	122	95	84	79	76	74	72	72	71	95	83	77	74	72	70	69	69	69
	nG	[rpm]	1435	1900	2410	2890	3410	3770	4190	4440	4690	1445	1930	2410	2930	3280	3770	4190	4440	4650
	nM	[rpm]	2870	2890	2890	2890	2890	2930	2930	2930	2930	2890	2890	2890	2930	2930	2930	2930	2930	2930
	Pk	[kW]	2.67	3.51	4.47	5.41	6.49	7.27	8.24	8.84	9.46	3.68	4.89	6.13	7.52	8.51	9.99	11.3	12.2	12.9
	P_{mot}	[kW]	4	5.5	5.5	7.5	7.5	11	11	11	11	5.5	7.5	7.5	11	11	15	15	15	15
	Motor size		112 M	132 S	132 S	132 S	132 S	160M	160M	160M	160M	132 S	132 S	132 S	160 M	160 M	160 M	160 M	160 M	160 M
	Lp(A)[dB]	w/o.H./w.H.	80/<65	82/<65	84/<65	87/68	89/68	90/68	91/68	91/69	92/70	77/<65	78/70	80/67	83/66	84/67	87/68	88/67	92/70	93/70
600	$\dot{V}_1$	[m³/min]		2.08	3.07	4.07	4.87	5.89	6.76	7.27	7.79	2.08	3.44	4.5	6.24	7.22	8.59	9.76	10.5	11.1
	t_2	[°C]		116	102	94	90	87	84	83	83	118	99	92	86	84	82	80	80	79
	nG	[rpm]		1930	2410	2890	3280	3770	4190	4440	4690	1445	1930	2310	2930	3280	3770	4190	4440	4650
	nM	[rpm]		2890	2890	2890	2930	2930	2930	2930	2930	2890	2890	2930	2930	2930	2930	2930	2930	2930
	Pk	[kW]		4.24	5.3	6.41	7.34	8.57	9.68	10.4	11.1	4.35	5.8	6.94	8.89	10	11.7	13.3	14.3	15.1
	P_{mot}	[kW]		5.5	7.5	7.5	11	11	11	15	15	5.5	7.5	11	11	15	15	15	18.5	18.5
	Motor size			132 S	132 S	132 S	160M	160M	160M	160 M	160 M	132 S	132 S	160 M	160 M	160 M	160 M	160 M	160 L	160 L
	Lp(A)[dB]	w/o.H./w.H.		84/<65	86/66	88/68	89/68	91/68	91/69	92/69	92/70	77/<65	78/71	80/68	84/67	85/68	87/69	88/68	92/70	94/70
700	$\dot{V}_1$	[m³/min]			2.92	4.00	4.72	5.71	6.60	7.12	7.64		3.28	4.34	6.08	7.06	8.43	9.61	10.3	10.9
	t_2	[°C]			120	109	104	100	97	96	94		117	107	99	96	93	92	91	90
	nG	[rpm]			2410	2930	3280	3760	4190	4440	4690		1930	2310	2930	3280	3770	4190	4440	4650
	nM	[rpm]			2890	2930	2930	2930	2930	2930	2930		2890	2930	2930	2930	2930	2930	2930	2930
	Pk	[kW]			6.13	7.51	8.47	9.84	11.1	11.9	12.7		6.7	8.02	10.3	11.6	13.5	15.3	16.3	17.3
	P_{mot}	[kW]			7.5	11	11	11	15	15	15		7.5	11	15	15	18.5	18.5	18.5	22
	Motor size				132 S	160M	160M	160M	160 M	160 M	160 M		132 S	160 M	160 M	160 M	160 L	160 L	160 L	180 M
	Lp(A)[dB]	w/o.H./w.H.			88/67	89/68	90/68	92/69	92/70	92/70	92/70		79/71	80/69	84/67	84/68	88/69	89/69	92/68	94/69
800	$\dot{V}_1$	[m³/min]												4.2	5.93	6.91	7.98	9.46	10.2	10.7
	t_2	[°C]												123	113	109	106	103	102	101
	nG	[rpm]												2310	2930	3280	3660	4190	4440	4650
	nM	[rpm]												2930	2930	2930	2930	2930	2930	2930
	Pk	[kW]												9.1	11.6	13.1	14.8	17.2	18.4	19.5
	P_{mot}	[kW]												11	15	15	18.5	22	22	22
	Motor size													160 M	160 M	160 M	160 L	180 M	180 M	180 M
	Lp(A)[dB]	w/o.H./w.H.												81/69	84/67	85/69	87/60	90/70	92/67	93/68
900	$\dot{V}_1$	[m³/min]														6.77	7.84	9.32	10.1	10.7
	t_2	[°C]														122	118	115	113	112
	nG	[rpm]														3280	3660	4190	4460	4680
	nM	[rpm]														2930	2930	2930	2945	2945
	Pk	[kW]														14.6	16.5	19.2	20.6	21.8
	P_{mot}	[kW]														18.5	18.5	22	30	30
	Motor size															160 L	160 L	180 M	200 L	200 L
	Lp(A)[dB]	w/o.H./w.H.														85/69	88/70	89/70	92/69	93/69
1000	$\dot{V}_1$	[m³/min]															7.71	8.72	9.95	10.6
	t_2	[°C]															131	128	125	124
	nG	[rpm]															3660	4020	4460	4680
	nM	[rpm]															2930	2945	2945	2945
	Pk	[kW]															18.2	20.2	22.7	24
	P_{mot}	[kW]															22	30	30	30
	Motor size																180 M	200 L	200 L	200 L
	Lp(A)[dB]	w/o.H./w.H.															89/70	89/70	92/70	93/72

Lower differential pressures on request. GM 10 S from 10 m³/min - accessories DN 100. Performance data are non-binding examples only.

Δp mbar	Blower size		GM 15 L / DN 100									GM 25 S / DN 125								
300	$\dot{V}_1$	[m³/min]	3.95	5.84	7.99	10.1	11.6	13.6	15.4	16.4	17.3	6.18	8.69	11.1	14.5	16.6	18.7	20.6	22.7	24.2
	t_2	[°C]	58	54	51	50	49	49	48	48	48	53	51	50	48	48	48	47	47	47
	nG	[rpm]	1435	1890	2410	2930	3290	3760	4190	4440	4650	1445	1890	2310	2930	3290	3660	4010	4370	4650
	nM	[rpm]	2870	2890	2890	2930	2930	2930	2930	2930	2930	2890	2890	2930	2930	2930	2930	2930	2930	2930
	Pk	[kW]	3.26	4.34	5.64	7.04	8.07	9.52	10.9	11.8	12.6	4.46	5.86	7.3	9.64	11.1	12.8	14.4	16.2	17.7
	P_{mot}	[kW]	4	5.5	7.5	11	11	11	15	15	15	5.5	7.5	11	11	15	15	18.5	18.5	22
	Motor size		112 M	132 S	132 S	160 M	160 M	160 M	160 M	160 M	160 M	132 S	132 S	160 M	160 M	160 M	160 M	160 L	160 L	180 M
	Lp(A)[dB]	w/o.H./w.H.	83/69	84/<65	86/<65	88/<65	87/65	89/66	91/67	91/68	91/69	81/66	85/66	87/70	92/69	92/69	93/69	92/69	94/71	96/72
400	$\dot{V}_1$	[m³/min]	3.69	5.53	7.27	9.84	11.3	13.3	15.1	16.1	17	5.88	8.56	10.8	14.2	16.3	18.4	20.3	22.5	24.1
	t_2	[°C]	74	67	64	61	60	59	59	58	58	66	62	60	59	58	58	57	57	57
	nG	[rpm]	1445	1890	2310	2930	3290	3760	4190	4440	4650	1445	1920	2310	2930	3290	3660	4010	4400	4680
	nM	[rpm]	2890	2890	2930	2930	2930	2930	2930	2930	2930	2890	2930	2930	2930	2930	2930	2930	2945	2950
	Pk	[kW]	4.28	5.64	6.97	9.06	10.3	12.1	13.8	14.9	15.8	5.82	7.76	9.47	12.4	14.2	16.2	18.2	20.5	22.2
	P_{mot}	[kW]	5.5	7.5	11	11	15	15	18.5	18.5	18.5	7.5	11	11	15	18.5	18.5	22	30	30
	Motor size		132 S	132 S	160 M	160 M	160 M	160 M	160 L	160 L	160 L	132 S	160 M	160 M	160 M	160 L	160 L	180 M	200 L	200 L
	Lp(A)[dB]	w/o.H./w.H.	83/68	85/<65	86/<65	88/<65	87/<65	88/67	92/67	92/69	94/71	83/67	86/67	87/71	92/69	93/69	93/70	93/70	95/71	98/72
500	$\dot{V}_1$	[m³/min]	3.42	5.38	7	9.57	11.1	12.6	14	15.8	16.7	5.73	8.29	10.5	14	16	18.1	20.2	22.3	23.8
	t_2	[°C]	93	82	77	73	72	70	69	69	68	80	75	72	69	68	68	67	67	66
	nG	[rpm]	1445	1920	2310	2930	3290	3660	4010	4440	4650	1465	1920	2310	2930	3290	3660	4030	4400	4680
	nM	[rpm]	2890	2930	2930	2930	2930	2930	2930	2930	2930	2930	2930	2930	2930	2930	2930	2945	2945	2950
	Pk	[kW]	5.28	7.06	8.57	11.1	12.6	14.3	15.9	18	19	7.27	9.56	11.6	15.1	17.3	19.6	22.1	24.6	26.6
	P_{mot}	[kW]	7.5	11	11	15	15	18.5	18.5	22	22	11	11	15	18.5	22	22	30	30	30
	Motor size		132 S	160 M	160 M	160 M	160 M	160 L	160 L	180 M	180 M	160 M	160 M	160 M	160 L	180 M	180 M	200 L	200 L	200 L
	Lp(A)[dB]	w/o.H./w.H.	84/67	87/<65	88/<65	90/<65	88/<65	88/67	91/68	94/70	96/72	85/67	88/68	88/71	93/69	93/70	94/71	94/71	97/72	99/72
600	$\dot{V}_1$	[m³/min]	3.17	5.14	6.75	9.32	10.8	12.3	14.5	15.7	16.6	5.49	8.05	10.2	13.7	15.9	18	19.9	22	23.6
	t_2	[°C]	115	98	91	85	83	82	80	79	79	95	87	84	80	79	78	77	77	76
	nG	[rpm]	1445	1920	2310	2930	3290	3660	4190	4460	4680	1465	1920	2310	2930	3310	3680	4030	4400	4680
	nM	[rpm]	2890	2930	2930	2930	2930	2930	2930	2945	2945	2930	2930	2930	2930	2945	2945	2945	2950	2950
	Pk	[kW]	6.28	8.38	10.2	13.1	14.9	16.8	19.6	21.1	22.4	8.65	11.4	13.8	17.9	20.5	23.2	25.8	28.7	31
	P_{mot}	[kW]	7.5	11	15	15	18.5	22	22	30	30	11	15	18.5	22	30	30	30	37	37
	Motor size		132 S	160 M	160 M	160 M	160 L	180 M	180 M	200 L	200 L	160 M	160 M	160 L	180 M	200 L	200 L	200 L	200 L	200 L
	Lp(A)[dB]	w/o.H./w.H.	86/68	88/<65	88/<65	89/<65	88/66	88/68	92/68	95/70	97/72	86/69	89/69	89/71	93/70	94/71	95/72	96/72	98/72	100/73
700	$\dot{V}_1$	[m³/min]		4.91	6.53	9.1	10.6	12.1	13.6	15.4	16.3	5.27	7.83	10	13.6	15.7	17.7	20.1	21.8	23.3
	t_2	[°C]		115	106	98	95	93	92	90	89	112	101	96	91	90	88	87	87	86
	nG	[rpm]		1920	2310	2930	3290	3660	4030	4460	4680	1465	1920	2310	2945	3310	3680	4100	4400	4670
	nM	[rpm]		2930	2930	2930	2930	2930	2945	2945	2945	2930	2930	2930	2945	2945	2945	2950	2950	2940
	Pk	[kW]		9.71	11.8	15.1	17.2	19.3	21.5	24.2	25.6	10	13.2	16	20.8	23.6	26.7	30.2	32.9	35.3
	P_{mot}	[kW]		11	15	18.5	22	22	30	30	30	15	15	18.5	30	30	30	37	37	45
	Motor size			160 M	160 M	160 L	180 M	180 M	200 L	200 L	200 L	160 M	160 M	160 L	200 L	200 L	200 L	200 L	200 L	225 M
	Lp(A)[dB]	w/o.H./w.H.		88/<65	88/<65	89/<65	89/67	89/70	90/68	96/70	99/72	87/69	90/69	91/72	93/70	94/70	96/71	97/71	98/72	100/73
800	$\dot{V}_1$	[m³/min]										5.06	7.68	9.8	13.4	15.4	17.6	19.8	21.5	23.1
	t_2	[°C]										129	115	109	103	101	99	98	97	96
	nG	[rpm]										1465	1930	2310	2945	3310	3690	4080	4390	4670
	nM	[rpm]										2930	2930	2930	2945	2945	2950	2940	2940	2940
	Pk	[kW]										11.4	15	18.1	23.5	26.7	30.2	33.9	36.9	39.7
	P_{mot}	[kW]										15	18.5	22	30	30	37	45	45	45
	Motor size											160 M	160 L	180 M	200 L	200 L	200 L	225 M	225 M	225 M
	Lp(A)[dB]	w/o.H./w.H.										88/70	91/70	92/73	94/71	95/70	96/70	97/70	99/71	101/73
900	$\dot{V}_1$	[m³/min]											7.49	9.68	13.2	15.3	17.3	19.6	21.4	23
	t_2	[°C]											129	122	115	112	110	108	107	106
	nG	[rpm]											1930	2320	2945	3320	3680	4080	4410	4690
	nM	[rpm]											2930	2945	2945	2950	2950	2940	2960	2960
	Pk	[kW]											16.9	20.4	26.3	30	33.6	37.7	41.2	44.3
	P_{mot}	[kW]											22	30	30	37	37	45	55	55
	Motor size												180 M	200 L	200 L	200 L	200 L	225 M	250 M	250 M
	Lp(A)[dB]	w/o.H./w.H.											92/70	94/73	95/71	96/71	97/71	97/72	99/72	101/73
1000	$\dot{V}_1$	[m³/min]													13	15.1	17.2	19.5	21.3	22.8
	t_2	[°C]													127	123	121	119	118	117
	nG	[rpm]													2950	3320	3680	4100	4410	4690
	nM	[rpm]													2950	2950	2940	2960	2960	2960
	Pk	[kW]													29.1	33.1	37	41.8	45.4	48.7
	P_{mot}	[kW]													37	37	45	55	55	55
	Motor size														200 L	200 L	225 M	250 M	250 M	250 M
	Lp(A)[dB]	w/o.H./w.H.													97/71	97/71	98/72	98/73	100/73	102/73

Lower differential pressures on request. Performance data are non-binding examples only.

Δp mbar	Blower size		GM 30 L / DN 150									GM 35 S / DN 150							
300	$\dot{V}_1$	[m³/min]	**8.68**	**11.7**	**15.6**	**20.5**	**23.3**	**26.3**	**29.2**	**32.7**	**34.7**	**14**	**18.2**	**23.6**	**27.1**	**30.6**	**34.6**	**38.8**	**40.3**
	t_2	[°C]	53	51	50	49	48	48	48	47	47	50	49	48	48	47	47	47	47
	nG	[rpm]	1445	1830	2310	2930	3280	3660	4020	4460	4710	1490	1860	2330	2640	2945	3300	3670	3800
	nM	[rpm]	2890	2930	2930	2930	2930	2930	2945	2945	2945	2930	2930	2930	2930	2945	2945	2950	2950
	Pk	[kW]	6.38	8.13	10.5	13.7	15.7	17.9	20.2	23.1	24.8	9.56	12.2	15.8	18.4	21.2	24.9	29.1	30.7
	P_{mot}	[kW]	7.5	11	15	18.5	18.5	22	30	30	30	11	15	18.5	22	30	30	37	37
	Motor size		132 S	160 M	160 M	160 M	160 L	180 M	200 L	200 L	200 L	160 M	160 M	160 L	180 M	200 L	200 L	200 L	200 L
	Lp(A)[dB]	w/o.H./w.H.	84/71	86/70	88/73	91/72	93/73	95/74	96/74	97/74	97/75	86/67	90/68	92/72	92/71	91/71	92/71	96/71	99/71
400	$\dot{V}_1$	[m³/min]	**8.41**	**12**	**15.1**	**20.1**	**23**	**26**	**28.7**	**32.3**	**34.3**	**13.6**	**17.8**	**23.2**	**26.4**	**30.1**	**34.2**	**38.2**	**39.8**
	t_2	[°C]	66	63	61	59	58	58	57	57	57	62	60	58	58	57	57	56	56
	nG	[rpm]	1465	1920	2310	2930	3300	3680	4020	4470	4720	1490	1860	2340	2620	2945	3300	3660	3800
	nM	[rpm]	2930	2930	2930	2930	2945	2945	2945	2950	2950	2930	2930	2945	2945	2945	2950	2940	2940
	Pk	[kW]	8.41	11.1	13.5	17.6	20.2	22.9	25.5	29.1	31.2	12.4	15.7	20.3	23.2	26.8	31.1	35.9	37.9
	P_{mot}	[kW]	11	15	18.5	22	30	30	30	37	37	15	18.5	30	30	30	37	45	45
	Motor size		160 M	160 M	160 L	180 M	200 L	200 L	200 L	200 L	200 L	160 M	160 L	200 L	200 L	200 L	200 L	225 M	225 M
	Lp(A)[dB]	w/o.H./w.H.	85/71	88/71	89/74	91/72	93/72	95/73	96/73	98/74	99/75	87/68	90/69	93/73	92/72	92/71	94/71	97/72	99/72
500	$\dot{V}_1$	[m³/min]	**8.02**	**11.7**	**14.7**	**19.8**	**22.6**	**25.7**	**28.4**	**31.3**	**33.8**	**12.9**	**17.4**	**22.9**	**26**	**29.8**	**33.6**	**38.1**	**39.4**
	t_2	[°C]	81	75	72	70	69	68	67	67	66	74	71	69	68	67	66	66	66
	nG	[rpm]	1465	1930	2310	2945	3300	3690	4020	4390	4700	1465	1860	2340	2620	2950	3290	3680	3800
	nM	[rpm]	2930	2930	2930	2945	2945	2950	2950	2940	2940	2930	2930	2945	2950	2950	2940	2955	2955
	Pk	[kW]	10.4	13.7	16.6	21.6	24.6	27.9	30.9	34.3	37.2	14.9	19.2	24.7	28.2	32.5	37.2	43.2	45.1
	P_{mot}	[kW]	15	18.5	22	30	30	37	37	45	45	18.5	22	30	37	37	45	55	55
	Motor size		160 M	160 L	180 M	200 L	200 L	200 L	200 L	225 M	225 M	160 L	180 M	200 L	200 L	200 L	225 M	250 M	250 M
	Lp(A)[dB]	w/o.H./w.H.	86/72	90/72	90/75	91/73	93/72	95/72	97/72	99/73	100/75	87/69	91/70	94/73	93/72	93/72	97/72	98/73	100/73
600	$\dot{V}_1$	[m³/min]	**7.68**	**10.6**	**14.6**	**19.5**	**22.3**	**25.4**	**28.5**	**31**	**33.7**	**12.6**	**16.8**	**22.5**	**25.7**	**29.3**	**33.5**	**37.9**	**39.1**
	t_2	[°C]	96	89	84	81	79	78	77	77	76	87	82	79	78	77	76	76	75
	nG	[rpm]	1465	1830	2330	2945	3300	3690	4080	4390	4730	1465	1840	2340	2620	2940	3310	3700	3800
	nM	[rpm]	2930	2930	2950	2945	2950	2950	2940	2940	2960	2930	2945	2950	2950	2940	2955	2970	2970
	Pk	[kW]	12.3	15.4	19.8	25.5	28.9	32.8	36.8	40.1	43.8	17.7	22.5	29.2	33.1	37.9	43.8	50.5	52.3
	P_{mot}	[kW]	15	18.5	30	30	37	37	45	45	55	22	30	37	37	45	55	75	75
	Motor size		160 M	160 L	200 L	200 L	200 L	200 L	225 M	225 M	250 M	180 M	200 L	200 L	200 L	225 M	250 M	280 S	280 S
	Lp(A)[dB]	w/o.H./w.H.	86/72	88/72	90/75	92/73	94/73	97/73	99/74	99/74	100/75	88/71	91/70	95/73	94/72	93/72	99/73	99/74	100/74
700	$\dot{V}_1$	[m³/min]	**7.36**	**10.3**	**14.2**	**19.2**	**22**	**24.8**	**28.3**	**30.8**	**33.6**	**12.3**	**16.5**	**22.2**	**25.7**	**29.2**	**33.4**	**37.6**	**38.8**
	t_2	[°C]	113	103	96	92	90	89	87	87	86	100	94	90	89	87	86	85	85
	nG	[rpm]	1465	1830	2330	2950	3300	3660	4100	4410	4760	1475	1840	2340	2650	2955	3330	3700	3800
	nM	[rpm]	2930	2930	2945	2950	2950	2940	2955	2960	2970	2945	2945	2950	2940	2955	2970	2970	2970
	Pk	[kW]	14.2	17.8	22.9	29.5	33.3	37.4	42.5	46.2	50.5	20.6	26	33.6	38.6	43.7	50.4	57.5	59.5
	P_{mot}	[kW]	18.5	22	30	37	37	45	55	55	75	30	30	37	45	55	75	75	75
	Motor size		160 L	180 M	200 L	200 L	200 L	225 M	250 M	250 M	280 S	200 L	200 L	200 L	225 M	250 M	280 S	280 S	280 S
	Lp(A)[dB]	w/o.H./w.H.	86/73	89/72	90/75	94/73	96/73	101/74	102/75	99/75	100/75	88/71	91/71	94/74	95/73	96/72	100/72	100/73	101/73
800	$\dot{V}_1$	[m³/min]										**12**	**16.2**	**21.7**	**25.5**	**28.8**	**33.1**	**35.3**	**38.4**
	t_2	[°C]										113	106	101	99	98	97	96	95
	nG	[rpm]										1475	1840	2330	2660	2955	3330	3520	3800
	nM	[rpm]										2945	2950	2940	2960	2955	2970	2970	2970
	Pk	[kW]										23.4	29.4	37.8	43.8	49.3	56.7	60.7	66.7
	P_{mot}	[kW]										30	37	45	55	55	75	75	75
	Motor size											200 L	200 L	225 M	250 M	250 M	280 S	280 S	280 S
	Lp(A)[dB]	w/o.H./w.H.										89/72	91/72	94/75	96/73	99/73	101/72	101/72	102/72
900	$\dot{V}_1$	[m³/min]										**11.8**	**15.9**	**21.7**	**24.9**	**28.7**	**32.8**	**37**	**38.2**
	t_2	[°C]										127	119	113	110	108	107	106	105
	nG	[rpm]										1475	1840	2350	2630	2970	3330	3700	3800
	nM	[rpm]										2945	2950	2955	2955	2970	2970	2970	2970
	Pk	[kW]										26.2	32.9	42.6	48.2	55.2	63	71.5	73.9
	P_{mot}	[kW]										30	37	55	55	75	75	90	90
	Motor size											200 L	200 L	250 M	250 M	280 S	280 S	280 M2	280 M2
	Lp(A)[dB]	w/o.H./w.H.										89/72	92/72	95/75	96/73	99/73	101/73	102/73	103/73
1000	$\dot{V}_1$	[m³/min]											**15.6**	**21.4**	**24.7**	**28.5**	**30.3**	**36.8**	**37.9**
	t_2	[°C]											132	124	122	119	118	116	115
	nG	[rpm]											1840	2350	2640	2970	3130	3700	3800
	nM	[rpm]											2940	2955	2970	2970	2970	2970	2970
	Pk	[kW]											36.4	47.1	53.4	60.9	64.6	78.5	81.1
	P_{mot}	[kW]											45	55	75	75	75	90	90
	Motor size												225 M	250 M	280 S	280 S	280 S	280 M2	280 M2
	Lp(A)[dB]	w/o.H./w.H.											92/72	95/75	97/74	100/73	101/73	102/74	104/75

Lower differential pressures on request. Performance data are non-binding examples only.

Δp mbar	Blower size		GM 50 L / DN 150							GM 50 L / DN 200			GM 60 S / DN 200								
300	$\dot{V}_1$	[m³/min]	19.7	22.5	26	33.7	38.2	41.1	43.5	49.1	52.2	55.1	20.1	26.9	30.9	35.7	40.1	45.9	52.4	55.7	59
	t_2	[°C]	50	49	49	48	48	47	47	47	47	47	51	50	49	49	48	48	47	47	47
	nG	[rpm]	1465	1640	1860	2340	2620	2800	2950	3300	3490	3670	1150	1465	1650	1870	2070	2340	2640	2790	2940
	nM	[rpm]	2930	2930	2930	2945	2945	2950	2950	2950	2940	2940	2930	2930	2945	2945	2945	2950	2940	2940	2940
	Pk	[kW]	13.2	15	17.5	23.4	27.2	29.8	32.1	32.8	35.4	38	13.4	17.4	19.9	23	26	30.1	34.9	37.4	40
	P_{mot}	[kW]	15	18.5	22	30	30	37	37	37	45	45	15	22	30	30	30	37	45	45	45
	Motor size		160 M	160 L	180 M	200 L	200 L	200 L	200 L	200 L	225 M	225 M	160 M	180 M	200 L	200 L	200 L	200 L	225 M	225 M	225 M
	Lp(A)[dB]	w/o.H./w.H.	87/71	87/70	90/70	92/70	91/70	92/69	92/70	98/71	98/72	100/74	86/73	89/73	93/73	97/74	96/74	97/75	98/75	99/76	99/76
400	$\dot{V}_1$	[m³/min]	19.1	21.9	25.1	33.2	38.1	40.4	42.8	48.7	51.4	54.8	19.3	26.4	30.2	35	39.7	45	52.1	55.2	58.8
	t_2	[°C]	61	60	59	58	57	57	57	56	56	56	63	61	60	59	58	58	57	57	57
	nG	[rpm]	1465	1640	1840	2340	2650	2790	2940	3310	3480	3690	1150	1475	1650	1870	2090	2330	2660	2800	2970
	nM	[rpm]	2930	2930	2945	2950	2940	2940	2940	2955	2955	2960	2930	2945	2945	2950	2940	2940	2955	2955	2970
	Pk	[kW]	17.1	19.4	22.2	29.6	34.7	37.2	39.8	41.8	44.6	48.1	17.5	22.9	25.9	29.8	33.9	38.4	44.9	47.7	51.2
	P_{mot}	[kW]	22	22	30	37	45	45	45	55	55	55	22	30	30	37	45	45	55	55	75
	Motor size		180 M	180 M	200 L	200 L	225 M	225 M	225 M	250 M	250 M	250 M	180 M	200 L	200 L	200 L	225 M	225 M	250 M	250 M	280 S
	Lp(A)[dB]	w/o.H./w.H.	87/69	88/69	91/70	92/71	92/71	92/71	92/70	98/71	99/73	100/75	87/74	90/73	93/73	97/74	97/74	97/75	99/76	99/76	101/76
500	$\dot{V}_1$	[m³/min]	18.8	21.6	24.6	32.5	37.8	40	42.5	48.4	51.2	54.6	18.9	25.7	29.5	34.3	39.3	44.5	51.5	54.9	58.2
	t_2	[°C]	73	71	70	68	67	67	67	66	66	66	76	72	71	70	69	68	67	67	66
	nG	[rpm]	1475	1650	1840	2330	2660	2800	2955	3320	3500	3710	1160	1475	1650	1870	2100	2340	2660	2820	2970
	nM	[rpm]	2945	2945	2945	2940	2955	2955	2955	2970	2970	2970	2945	2950	2950	2940	2955	2955	2970	2970	2970
	Pk	[kW]	21.2	24	27.1	35.7	42	44.8	48	50.9	54.3	58.4	21.9	28.2	31.9	36.6	41.6	47.1	54.5	58.3	62
	P_{mot}	[kW]	30	30	30	45	55	55	55	75	75	75	30	37	37	45	55	55	75	75	75
	Motor size		200 L	200 L	200 L	225 M	250 M	250 M	250 M	280 S	280 S	280 S	200 L	200 L	200 L	225 M	250 M	250 M	280 S	280 S	280 S
	Lp(A)[dB]	w/o.H./w.H.	88/68	90/69	92/70	93/74	92/74	92/72	93/71	99/72	99/73	101/76	88/74	91/74	93/74	97/74	97/74	97/75	100/76	100/76	102/77
600	$\dot{V}_1$	[m³/min]	18.3	21.1	24.1	32.3	37.3	39.9	42.3	47.9	50.8	54.1	18.3	25.1	28.9	33.7	38.7	44.3	50.9	53.2	57.4
	t_2	[°C]	85	83	81	79	77	77	77	76	76	75	89	84	82	80	79	78	77	77	76
	nG	[rpm]	1475	1650	1840	2350	2660	2820	2970	3320	3500	3710	1160	1475	1650	1870	2100	2360	2660	2770	2960
	nM	[rpm]	2945	2950	2950	2955	2955	2970	2970	2970	2970	2970	2945	2950	2940	2955	2955	2970	2970	2970	1480
	Pk	[kW]	25.2	28.4	32	42.3	49.1	52.8	56.3	59.7	63.6	68.3	26.1	33.6	37.8	43.3	49.2	56.1	64.1	67.2	72.5
	P_{mot}	[kW]	30	37	37	55	55	75	75	75	75	90	30	37	45	55	55	75	75	75	90
	Motor size		200 L	200 L	200 L	250 M	250 M	280 S	280 S	280 S	280 S	280 M	200 L	200 L	225 M	250 M	250 M	280 S	280 S	280 S	280 M
	Lp(A)[dB]	w/o.H./w.H.	88/69	90/69	92/70	94/75	93/74	94/74	95/73	100/72	101/74	103/76	90/75	92/75	94/74	97/74	97/75	98/75	100/76	101/77	103/78
700	$\dot{V}_1$	[m³/min]	17.9	20.7	23.7	31.7	36.6	39.4	41.8	44.7	50.3	53.7	17.7	24.5	28.2	33.4	38.4	43.8	49.9	52.5	57.2
	t_2	[°C]	98	95	93	89	88	87	87	86	85	85	103	96	94	92	90	89	87	87	86
	nG	[rpm]	1475	1650	1840	2340	2640	2820	2970	3150	3500	3710	1160	1470	1640	1880	2110	2360	2640	2760	2980
	nM	[rpm]	2950	2950	2940	2955	2970	2970	2970	2970	2970	2970	2950	2940	2955	2970	2970	2970	1480	1480	1485
	Pk	[kW]	29.1	32.8	36.9	48.4	55.7	60.3	64.2	64.6	73	78.2	30.3	38.8	43.5	50.4	57.1	64.6	73.2	76.9	83.8
	P_{mot}	[kW]	37	37	45	55	75	75	75	75	90	90	37	45	55	75	75	75	90	90	110
	Motor size		200 L	200 L	225 M	250 M	280 S	280 S	280 S	280 S	280 M	280 M	200 L	225 M	250 M	280 S	280 S	280 S	280 M	280 M	315 S
	Lp(A)[dB]	w/o.H./w.H.	89/69	91/69	92/70	95/75	95/75	95/75	97/75	99/75	102/74	105/76	91/75	94/74	95/74	98/75	98/75	99/77	100/77	102/77	103/78
800	$\dot{V}_1$	[m³/min]											17.2	24.1	27.6	32.9	37.8	43.1	49.6	52.2	56.7
	t_2	[°C]											118	109	106	103	101	99	98	97	96
	nG	[rpm]											1160	1475	1640	1880	2110	2350	2650	2770	2980
	nM	[rpm]											2940	2955	2955	2970	2970	1480	1485	1485	1485
	Pk	[kW]											34.5	44.2	49.5	57.2	64.8	72.8	83.1	87.2	94.6
	P_{mot}	[kW]											45	55	55	75	75	90	110	110	110
	Motor size												225 M	250 M	250 M	280 S	280 S	280 M	315 S	315 S	315 S
	Lp(A)[dB]	w/o.H./w.H.											92/75	98/74	98/74	101/75	100/76	101/78	102/78	103/78	104/78
900	$\dot{V}_1$	[m³/min]											16.7	23.6	27.4	32.4	37.4	42.4	49.1	51.7	56.2
	t_2	[°C]											133	122	119	115	112	110	108	108	107
	nG	[rpm]											1160	1475	1650	1880	2110	2340	2650	2770	2980
	nM	[rpm]											2940	2955	2970	2970	1480	1480	1485	1485	1485
	Pk	[kW]											38.7	49.6	55.8	64	72.4	80.9	92.6	97.2	105
	P_{mot}	[kW]											45	55	75	75	90	90	110	110	132
	Motor size												225 M	250 M	280 S	280 S	280 M	280 M	315 S	315 S	315 M
	Lp(A)[dB]	w/o.H./w.H.											92/75	97/74	99/75	101/75	101/76	100/77	102/78	103/78	104/78
1000	$\dot{V}_1$	[m³/min]												23.3	26.9	31.9	36.3	42.1	48.6	51.2	55.8
	t_2	[°C]												135	131	127	124	121	119	118	117
	nG	[rpm]												1485	1650	1880	2080	2350	2650	2770	2980
	nM	[rpm]												2970	2970	1480	1480	1485	1485	1485	1485
	Pk	[kW]												55.3	61.7	70.8	78.8	89.8	102	107	116
	P_{mot}	[kW]												75	75	90	90	110	132	132	132
	Motor size													280 S	280 S	280 M	280 M	315 S	315 M	315 M	315 M
	Lp(A)[dB]	w/o.H./w.H.												98/75	100/76	102/76	101/77	100/78	102/78	103/78	105/78

Lower differential pressures on request. GM 50 L from 45 m³/min - accessories DN 200. Performance data are non-binding examples only.

Δp mbar	Blower size		GM 80 L / DN 250									GM 90 S / DN 250								
300	$\dot{V}_1$	[m³/min]	**22.8**	**33.1**	**37.9**	**46.4**	**56.2**	**64.2**	**73.5**	**78.7**	**83.9**	**33.7**	**43.8**	**54.2**	**58.7**	**66.6**	**70.8**	**80.3**	**85.7**	**90.3**
	t_2	[°C]	53	51	50	49	48	48	48	47	47	50	49	48	48	48	48	47	47	47
	nG	[rpm]	975	1310	1465	1740	2060	2320	2620	2790	2960	978	1220	1470	1580	1770	1870	2100	2230	2340
	nM	[rpm]	1460	1465	1465	1470	1470	1475	1480	1480	1480	1465	1465	1470	1470	1475	1475	1480	1480	1480
	Pk	[kW]	15.8	21.7	24.5	29.9	36.7	42.8	50.5	55.2	60.3	21.3	27.1	33.7	36.8	42.6	45.8	53.7	58.4	62.7
	P_{mot}	[kW]	18.5	30	30	37	45	55	75	75	75	30	30	45	45	55	55	75	75	75
	Motor size		180 M	200 L	200 L	225 S	225 M	250 M	280 S	280 S	280 S	200 L	200 L	225 M	225 M	250 M	250 M	280 S	280 S	280 S
	Lp(A)[dB]	w/o.H./w.H.	86/73	89/75	90/75	94/73	97/75	96/76	97/78	98/78	101/79	88/73	91/74	94/75	94/74	100/75	101/76	100/79	99/78	100/78
400	$\dot{V}_1$	[m³/min]	**21.7**	**32.0**	**36.9**	**45.2**	**56.0**	**63.4**	**72.7**	**77.6**	**82.8**	**32.8**	**43.1**	**53.3**	**57.7**	**64.7**	**70.1**	**79.3**	**84.7**	**89.2**
	t_2	[°C]	66	62	61	60	58	58	57	57	57	62	60	58	58	58	57	57	57	56
	nG	[rpm]	975	1310	1470	1740	2090	2330	2630	2790	2960	980	1230	1475	1580	1750	1880	2100	2230	2340
	nM	[rpm]	1465	1470	1470	1470	1475	1480	1480	1480	1480	1470	1470	1475	1475	1480	1480	1480	1480	1480
	Pk	[kW]	20.8	28.4	32.2	38.8	48.1	55.0	64.3	69.6	75.5	28.1	35.9	44.1	47.8	54.1	59.1	68.2	73.9	78.9
	P_{mot}	[kW]	30	37	37	45	55	75	75	90	90	37	45	55	55	75	75	90	90	90
	Motor size		200 L	225 S	225 S	225 M	250 M	280 S	280 S	280 M	280 M	225 S	225 M	250 M	250 M	280 S	280 S	280 M	280 M	280 M
	Lp(A)[dB]	w/o.H./w.H.	86/73	90/75	92/75	95/74	96/75	96/77	98/78	99/79	102/80	89/74	92/75	95/76	97/75	100/76	101/76	100/79	100/78	100/77
500	$\dot{V}_1$	[m³/min]	**20.7**	**31.0**	**35.9**	**44.3**	**55.4**	**62.4**	**72.0**	**76.6**	**82.1**	**31.8**	**42.2**	**52.6**	**56.3**	**63.8**	**69.2**	**79.2**	**83.7**	**90.0**
	t_2	[°C]	81	74	73	71	69	68	67	67	67	74	71	69	68	68	67	67	66	66
	nG	[rpm]	975	1310	1470	1740	2100	2330	2640	2790	2970	980	1230	1480	1570	1750	1880	2120	2230	2380
	nM	[rpm]	1465	1470	1470	1475	1480	1480	1480	1485	1485	1470	1475	1480	1480	1480	1480	1485	1485	1485
	Pk	[kW]	25.8	35.1	39.7	47.8	59.2	67.0	78.2	83.9	91.1	34.9	44.4	54.5	58.3	66.2	72.1	83.7	89.3	97.2
	P_{mot}	[kW]	30	45	45	55	75	75	90	110	110	45	55	75	75	75	90	110	110	110
	Motor size		200 L	225 M	225 M	250 M	280 S	280 S	280 M	315 S	315 S	225 M	250 M	280 S	280 S	280 S	280 M	315 S	315 S	315 S
	Lp(A)[dB]	w/o.H./w.H.	87/74	92/75	93/75	95/74	95/76	96/77	99/78	101/79	103/80	89/74	92/76	96/77	97/76	101/76	102/76	101/79	100/78	101/77
600	$\dot{V}_1$	[m³/min]	**20.0**	**30.1**	**35.2**	**43.7**	**54.5**	**61.9**	**72.0**	**75.7**	**81.3**	**31.1**	**41.4**	**51.7**	**55.5**	**63.0**	**68.4**	**78.3**	**82.9**	**89.5**
	t_2	[°C]	96	87	85	82	80	79	77	77	77	86	82	80	79	78	77	76	76	76
	nG	[rpm]	980	1310	1475	1750	2100	2340	2670	2790	2970	982	1230	1480	1570	1750	1880	2120	2230	2390
	nM	[rpm]	1470	1475	1475	1480	1480	1480	1485	1485	1485	1475	1480	1480	1480	1480	1485	1485	1485	1485
	Pk	[kW]	31.0	41.8	47.4	57.1	70.0	79.3	93.0	98.2	106	41.8	52.9	64.7	69.1	78.3	85.1	98.4	105	114
	P_{mot}	[kW]	37	55	55	75	90	90	110	110	132	55	75	75	90	90	110	110	132	132
	Motor size		225 S	250 M	250 M	280 S	280 M	280 M	315 S	315 S	315 M	250 M	280 S	280 S	280 M	280 M	315 S	315 S	315 M	315 M
	Lp(A)[dB]	w/o.H./w.H.	89/74	91/75	93/75	95/75	95/76	96/78	99/78	101/79	103/80	90/74	93/77	97/78	98/77	102/76	103/76	101/79	101/78	102/77
700	$\dot{V}_1$	[m³/min]	**19.1**	**29.3**	**34.5**	**42.9**	**53.6**	**61.0**	**71.2**	**74.9**	**80.1**	**30.3**	**40.6**	**51.0**	**54.7**	**62.6**	**67.6**	**77.5**	**82.1**	**87.5**
	t_2	[°C]	112	101	97	94	91	89	88	87	87	99	94	91	90	88	88	87	86	86
	nG	[rpm]	980	1310	1480	1750	2100	2340	2670	2790	2960	982	1230	1480	1570	1760	1880	2120	2230	2360
	nM	[rpm]	1470	1475	1480	1480	1480	1485	1485	1485	1480	1475	1480	1480	1480	1485	1485	1485	1480	1480
	Pk	[kW]	36.0	48.6	55.2	66.1	80.8	91.4	107	113	121	48.6	61.4	75.0	80.0	91.0	98.2	113	120	129
	P_{mot}	[kW]	45	55	75	75	90	110	132	132	160	55	75	90	90	110	110	132	160	160
	Motor size		225 M	250 M	280 S	280 S	280 M	315 S	315 M	315 M	315 M	250 M	280 S	280 M	280 M	315 S	315 S	315 M	315 M	315 M
	Lp(A)[dB]	w/o.H./w.H.	88/75	91/75	93/75	95/76	95/77	97/78	101/79	102/79	104/80	91/75	94/77	98/78	99/77	103/77	104/76	102/78	102/78	103/79
800	$\dot{V}_1$	[m³/min]										**29.7**	**39.9**	**50.4**	**54.0**	**61.9**	**67.3**	**76.8**	**81.0**	**86.8**
	t_2	[°C]										112	106	102	101	99	98	97	96	96
	nG	[rpm]										985	1230	1485	1570	1760	1890	2120	2220	2360
	nM	[rpm]										1480	1480	1485	1485	1485	1485	1480	1480	1480
	Pk	[kW]										55.6	69.9	85.5	90.9	103	112	128	135	145
	P_{mot}	[kW]										75	90	110	110	132	132	160	160	160
	Motor size											280 S	280 M	315 S	315 S	315 M	315 M	315 M	315 M	315 M
	Lp(A)[dB]	w/o.H./w.H.										91/75	95/77	99/78	100/77	104/77	105/77	104/78	103/79	104/81
900	$\dot{V}_1$	[m³/min]										**29.0**	**39.2**	**49.8**	**53.3**	**61.2**	**66.6**	**76.1**	**80.3**	**86.1**
	t_2	[°C]										126	118	113	112	110	109	107	106	106
	nG	[rpm]										985	1230	1485	1570	1760	1890	2120	2220	2360
	nM	[rpm]										1480	1480	1485	1485	1485	1480	1480	1485	1485
	Pk	[kW]										62.4	78.4	95.8	102	115	125	142	150	161
	P_{mot}	[kW]										75	90	110	132	132	160	160	200	200
	Motor size											280 S	280 M	315 S	315 M	315 M	315 M	315 M	315 M	315 M
	Lp(A)[dB]	w/o.H./w.H.										91/75	95/77	98/79	100/78	104/79	105/78	104/78	103/80	104/81
1000	$\dot{V}_1$	[m³/min]											**38.5**	**49.1**	**52.7**	**60.5**	**65.9**	**75.5**	**79.6**	**85.5**
	t_2	[°C]											131	125	124	121	120	118	117	116
	nG	[rpm]											1230	1485	1570	1760	1890	2120	2220	2360
	nM	[rpm]											1485	1485	1485	1480	1480	1485	1485	1485
	Pk	[kW]											86.9	106	113	128	138	157	166	178
	P_{mot}	[kW]											110	132	132	160	160	200	200	200
	Motor size												315 S	315 M	315 M	315 M	315 M	315 M	315 M	315 M
	Lp(A)[dB]	w/o.H./w.H.											95/78	98/79	100/79	104/80	105/80	104/80	104/81	104/81

Lower differential pressures on request. Performance data are non-binding examples only.

Δp mbar	Blower size		GM 130 L / DN 300									GM 150 S / DN 300							
300	$\dot{V}_1$	[m³/min]	**47.8**	**62.9**	**78.0**	**82.2**	**94.3**	**102**	**115**	**131**	**134**	**77.3**	**94.4**	**102**	**116**	**122**	**132**	**147**	**152**
	t_2	[°C]	51	50	49	49	48	48	48	47	47	49	48	48	48	48	47	47	47
	nG	[rpm]	980	1230	1480	1550	1750	1880	2100	2350	2400	982	1170	1250	1410	1480	1580	1750	1800
	nM	[rpm]	1470	1470	1480	1480	1480	1480	1480	1485	1485	1475	1480	1480	1480	1480	1485	1485	1485
	Pk	[kW]	32.0	40.8	50.5	53.3	61.9	67.9	78.7	92.1	95.0	48.4	59.4	64.5	75.3	80.3	87.8	102	106
	P_{mot}	[kW]	37	45	75	75	75	75	90	110	110	55	75	75	90	90	110	132	132
	Motor size		225 S	225 M	280 S	280 S	280 S	280 S	280 M	315 S	315 S	250 M	280 S	280 S	280 M	280 M	315 S	315 M	315 M
	Lp(A)[dB]	w/o.H./w.H.	93/75	95/77	101/79	100/79	101/80	101/80	103/81	104/82	104/82	95/79	97/79	97/79	97/80	98/80	99/80	101/81	101/81
400	$\dot{V}_1$	[m³/min]	**46.2**	**61.2**	**76.3**	**80.5**	**93.2**	**100**	**115**	**130**	**132**	**75.8**	**92.6**	**101**	**114**	**121**	**130**	**146**	**150**
	t_2	[°C]	63	61	59	59	58	58	57	57	57	59	58	58	57	57	57	57	57
	nG	[rpm]	982	1230	1480	1550	1760	1880	2120	2370	2400	985	1170	1260	1410	1485	1580	1760	1800
	nM	[rpm]	1475	1480	1480	1480	1480	1485	1485	1485	1485	1480	1480	1485	1485	1485	1485	1480	1480
	Pk	[kW]	41.9	53.2	65.4	68.9	80.1	86.8	101	117	119	63.4	77.1	84.2	96.6	103	112	129	133
	P_{mot}	[kW]	55	75	75	90	90	110	132	132	132	75	90	110	110	132	132	160	160
	Motor size		250 M	280 S	280 S	280 M	280 M	315 S	315 M	315 M	315 M	280 S	280 M	315 S	315 S	315 M	315 M	315 M	315 M
	Lp(A)[dB]	w/o.H./w.H.	93/76	96/78	102/80	101/79	102/80	103/81	103/81	105/83	106/83	96/79	97/79	98/79	98/80	98/80	99/80	101/81	102/82
500	$\dot{V}_1$	[m³/min]	**44.8**	**60.8**	**74.7**	**86.2**	**91.6**	**98.9**	**113**	**128**	**130**	**74.2**	**91**	**100**	**113**	**120**	**127**	**144**	**148**
	t_2	[°C]	76	72	70	69	69	68	67	67	67	70	69	68	67	67	67	66	66
	nG	[rpm]	985	1250	1480	1670	1760	1880	2120	2370	2400	985	1170	1270	1410	1485	1570	1760	1800
	nM	[rpm]	1480	1480	1480	1485	1485	1485	1480	1480	1480	1480	1485	1485	1485	1480	1480	1485	1485
	Pk	[kW]	52.0	66.8	80.3	92.0	97.8	106	122	141	143	78.3	94.8	104	118	126	135	156	160
	P_{mot}	[kW]	75	75	90	110	110	132	160	160	160	90	110	132	132	160	160	200	200
	Motor size		280 S	280 S	280 M	315 S	315 S	315 M	315 M	315 M	315 M	280 M	315 S	315 M	315 M	315 M	315 M	315 M	315 M
	Lp(A)[dB]	w/o.H./w.H.	92/77	97/79	102/80	101/80	103/81	104/81	104/81	107/83	107/83	97/79	97/79	98/79	98/79	98/80	99/81	101/82	102/82
600	$\dot{V}_1$	[m³/min]	**43.4**	**59.4**	**73.6**	**84.8**	**90.2**	**97.5**	**112**	**119**	**126**	**72.7**	**89.5**	**101**	**110**	**118**	**126**	**143**	**147**
	t_2	[°C]	89	84	81	80	79	79	77	77	77	82	80	78	78	77	77	76	76
	nG	[rpm]	985	1250	1485	1670	1760	1880	2120	2230	2360	985	1170	1300	1400	1485	1570	1760	1800
	nM	[rpm]	1480	1480	1485	1485	1485	1480	1480	1485	1485	1485	1485	1480	1480	1485	1485	1485	1485
	Pk	[kW]	61.9	79.3	95.5	109	116	125	144	153	164	93.2	113	127	138	148	158	182	188
	P_{mot}	[kW]	75	90	110	132	132	160	160	200	200	110	132	160	160	200	200	250	250
	Motor size		280 S	280 M	315 S	315 M	315 M	315 M	315 M	315 M	315 M	315 S	315 M	315 M	315 M	315 M	315 M	315 L	315 L
	Lp(A)[dB]	w/o.H./w.H.	94/78	97/80	104/82	102/82	104/83	105/83	107/83	107/83	107/84	99/79	99/79	99/79	99/80	100/80	100/82	102/83	102/83
700	$\dot{V}_1$	[m³/min]										**71.4**	**88.2**	**96.3**	**109**	**117**	**125**	**142**	**145**
	t_2	[°C]										93	91	89	88	88	87	86	86
	nG	[rpm]										985	1170	1260	1400	1485	1580	1760	1800
	nM	[rpm]										1485	1480	1480	1485	1485	1485	1485	1485
	Pk	[kW]										108	130	141	159	170	183	209	215
	P_{mot}	[kW]										132	160	160	200	200	250	250	250
	Motor size											315 M	315 M	315 M	315 M	315 M	315 L	315 L	315 L
	Lp(A)[dB]	w/o.H./w.H.										100/80	100/80	100/80	100/80	101/81	101/82	102/83	102/83
800	$\dot{V}_1$	[m³/min]										**70.2**	**88.8**	**96.0**	**108**	**116**	**124**	**140**	**144**
	t_2	[°C]										105	101	100	99	98	97	96	96
	nG	[rpm]										985	1190	1270	1400	1488	1580	1760	1800
	nM	[rpm]										1480	1485	1485	1485	1485	1485	1490	1490
	Pk	[kW]										123	151	162	180	193	207	235	242
	P_{mot}	[kW]										160	200	200	200	250	250	315	315
	Motor size											315 M	315 M	315 M	315 M	315 L	315 L	315 L	315 L
	Lp(A)[dB]	w/o.H./w.H.										101/80	100/80	100/80	100/80	102/82	102/83	102/83	103/84
900	$\dot{V}_1$	[m³/min]										**69**	**87.6**	**94.9**	**107**	**115**	**123**	**139**	**143**
	t_2	[°C]										118	113	111	110	109	108	106	106
	nG	[rpm]										985	1190	1270	1400	1488	1580	1760	1800
	nM	[rpm]										1480	1485	1485	1485	1485	1490	1490	1490
	Pk	[kW]										138	169	181	202	216	231	262	269
	P_{mot}	[kW]										160	200	200	250	250	315	315	315
	Motor size											315 M	315 M	315 M	315 L	315 L	315 L	315 L	315 L
	Lp(A)[dB]	w/o.H./w.H.										102/81	101/80	101/80	101/81	102/83	103/84	103/84	103/84
1000	$\dot{V}_1$	[m³/min]										**68.4**	**86.5**	**93.8**	**106**	**114**	**122**	**138**	**142**
	t_2	[°C]										130	124	123	121	120	118	117	116
	nG	[rpm]										990	1190	1270	1400	1488	1580	1760	1800
	nM	[rpm]										1485	1485	1485	1485	1490	1490	1490	1490
	Pk	[kW]										154	187	200	223	238	255	289	296
	P_{mot}	[kW]										200	250	250	250	315	315	355	355
	Motor size											315 M	315 L	315 L	315 L	315 L	315 L	355 M	355 M
	Lp(A)[dB]	w/o.H./w.H.										103/82	102/81	102/80	102/81	103/84	104/84	103/84	104/84

Lower differential pressures on request. Higher intake volume flows on request. Performance data are non-binding examples only.



AERZEN. Compression as success factor.

AERZEN was founded in 1864 as Aerzener Maschinenfabrik. In 1868 we built Europe's first rotary lobe blower. The first turbo blowers followed in 1911, the first screw compressors in 1943, and in 2010 the world's first rotary lobe compressor unit. AERZEN innovations are a driving force behind the development of compressor technology. Today AERZEN is one of the world's oldest and most important manufacturers of rotary lobe blowers, rotary lobe compressors, rotary lobe gas meters, screw compressors, and turbo blowers. And in many areas of application, AERZEN is among the undisputed leaders.

There are more than 2,000 experienced AERZEN employees in over 40 affiliates worldwide working hard to advance compressor technology. Their technological expertise, our international network of experts, and the constant feedback from our customers are what make us successful. AERZEN products and services have become standards in the industry for reliability, lasting value, and efficiency. Go ahead: challenge us!

Aerzener Maschinenfabrik GmbH
Reherweg 28 – 31855 Aerzen / Germany
Telephone: +49 5154 81-0 – Fax: +49 5154 81-9191
info@aerzener.de – www.aerzen.com

AERZEN
EXPECT PERFORMANCE

G1-068 – 04 – EN – 2500 – 08.2014

Customer Reference: 510464 - Caesar Lanes
Aerzen Reference: 259014f

Submitted by: Farzin Mahmoudi
Farzin.Mahmoudi@aerzen.com

SCOPE OF SUPPLY

Process blowers - NEW OPTION : 2038 SCFM @ 9.74 PSIG

3 Aerzen Generation 5 Blower Package - GM 90S DN 250 - Pressure - including:

Aerzen GM 90S Blower
Drive Motor: 150hp, 1800rpm, TEFC, 460V/60Hz
Motor Protection - 1 Thermistor/Ph
Base with integrated reactive type discharge silencer
Intake filter silencer
Hinged motor support as automatic belt tensioning device
Set of vibration isolation mounts
Narrow v-belt drive with guard - 1 set
Spring loaded relief valve
Discharge manifold with externally accessible integrated check valve
Flexible connector with clamps for schedule 40 pipe, discharge
Acoustic Enclosure - Indoor/Outdoor
Inlet flexible sleeve - DN 250 (10")

Instruments
Pressure gauge c/w isolation ball valve (3x)
Dirty filter indicator (3x)

Optional Accessories
Temperature switch c/w thermowell 120V (3x)
Pressure switch 120V

Optional Spare Parts
1 Year Maintenance Kit (1 x V-Belt Set, 1 x Intake Filter)
2 Year Maintenance Kit (1 x V-Belt Set, 1 x Oil Change (Delta Lube), 2 x Air Filter)

Intake Connection: DN 250 - 10"
Discharge Connection: DN 250 - 10"

Aerzen Canada
980 rue Valois, Vaudreuil-Dorion, Québec J7V 8P2

Customer Reference: 510464 - Caesar Lanes
Aerzen Reference: 259014f

PERFORMANCE DATA

Aerzen Blower Package - GM 90S DN 250 - Pressure

Configuration:	**G5**	**Max flow duty point**	**Min Flow**	**Max blower capacity with 150 hp**
Conditions:	**Scfm**	2038	327	2403
Flow at inlet conditions	m³/min	60.4	9.7	71.2
	lcfm	2132	342	2515
Inlet pressure (abs.)	bar	1.012	1.012	1.012
	Psi	14.68	14.68	14.68
Pressure differential	mbar(g)	672	672	672
	Psig	9.74	9.74	9.74
Inlet temperature	°C	29.44	29.44	29.44
Discharge temperature	°C	97	148	95
Blower speed	RPM	1709	484	1971
Blower maximum speed	RPM	2400	2400	2400
% of maximum blower speed		71%	20%	82%
Power required at shaft	kW	84.3	23.6	99.3
	HP	113.0	31.6	133.2
Total Power (Wire to Air):	HP	125.1	35.0	147.5
Motor rating	**HP**	150.0		
Motor speed	RPM	1780	504	2054
Motor frequency	Hz	60	17	

Noise level without acoustic hood	dB(A)	101
Noise level with acoustic hood	dB(A)	79

Tolerances as per EN 10204, in accordance with standard ISO 1217:
Flow at inlet conditions / Power required at shaft +/- 5%

Blower package noise level:
Free field measurement at 1m from the complete blower package (tolerance +/- 2 dB(A))

Tests and measurements:
Blower stage: 1.5 hour flow test at the factory (Germany) on a calibrated test bed, at maximum operating conditions and according to DIN 1945. acceptance tolerance: +/- 5%.
A complete test report is available upon request.

On Site Commissioning
Available upon request, charges to be advised.
- Any commissioning activity is subject to two weeks prior notice and completion of commissioning checklist.
- Any on-site activity outside the time indicated will be billed according to the Aerzen Standard Rate Sheet

Exclusions
Control Panels, Motor Starters, Piping and Electrical Connections
* Unloading valves are required for reduced voltage starters

Warranty
Blowers including accessories are warranted for a period of 30mo / max 36mo after delivery and after provisional acceptance of the work against defects in workmanship and design. This warranty does not cover wearing parts unless such parts are defective during shipping / commissioning. As per Aerzen standard warranty terms.

** Power at shaft excludes drive motor and belt drive

NOTICE: THIS DRAWING AND ALL INFORMATION HEREIN IS THE PROPERTY OF AERZEN CANADA. AND ITS SUBSIDIARIES AND SHALL NOT BE REPRODUCED BY ANY MEANS IN WHOLE OR IN PART OR USED AS THE BASIS FOR MANUFACTURE WITHOUT WRITTEN PERMISSION.

CAUTION
BLOWER PACKAGES MUST BE CAREFULLY LEVELED. USE OIL LEVEL ON SIGHT GLASSES OF THE BLOWER STAGE. USE PROVIDED SHIMS TO ADJUST LEVEL IF NECESSARY. PLEASE REFER TO THE OPERATING AND INSTALLATION INSTRUCTIONS MANUAL (DOCUMENT # G4-006) FOR MORE DETAILS.

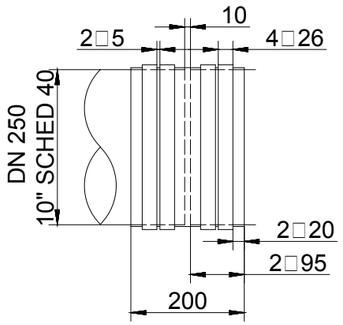

CONNECTION DETAILS

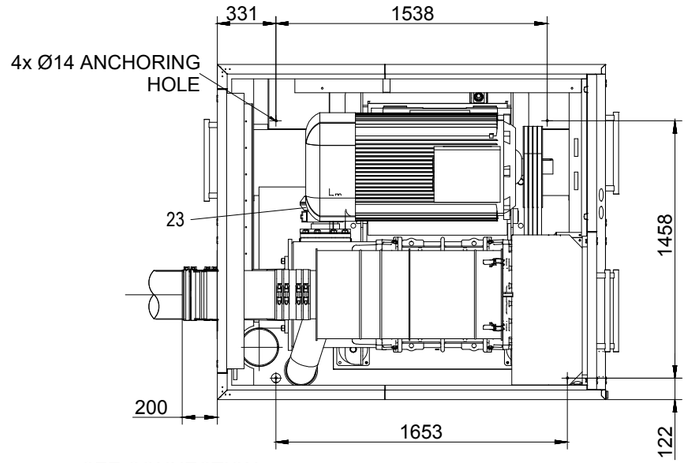

FOR STRADDLING DOWELS A/B 15/15 - LIEBIG DOWEL □NOT INCLUDED IN AER□EN'S SCOPE OF SUPPLY

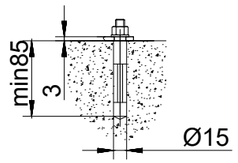

ANCHORING DETAILS

NOTE	QTY.	POS	DESCRIPTION
	1	1	BLOWER - GM 90 S - 690 KG
D	1	2	ELECTRIC MOTOR
	1	3	BASEFRAME / DISCHARGE SILENCER - DN 250
	1	4	CONNECTION HOUSING WITH CHECK VALVE - DN 250
	1	5	SET OF 4 VIBRATION ISOLATORS - DN 250
	1	6	DISCHARGE FLEXIBLE SLEEVE - WITH 4 CLAMPS - DN 250
	1	7	PRESSURE RELIEF VALVE - DN 150
	1	8	INLET FILTER / SILENCER - DN 250
	1	9	INLET FILTER ELEMENT - DN 250
E	1	10	BELT GUARD - DN 250
	1	11	DRIVER SHEAVE
E	1	12	DRIVER BUSHING
	1	13	DRIVEN SHEAVE
E	1	14	DRIVEN BUSHING
	1	15	V-BELT SET
	1	16	FILTER MAINTENANCE INDICATOR - WIKA
	1	17	DISCHARGE PRESSURE GAUGE WITH BALL VALVE - WIKA
	1	18	ACOUSTIC ENCLOSURE - DN 250
	1	19	FAN - MOUNTED ON BLOWER SHAFT - DN 250
E	1	20	FAN ADAPTOR - GM 90S
	1	21	LIFTING DEVICE
G	1	22	INLET FLEXIBLE SLEEVE - WITH 4 CLAMPS - DN 250
G	1	23	UNLOADING VALVE

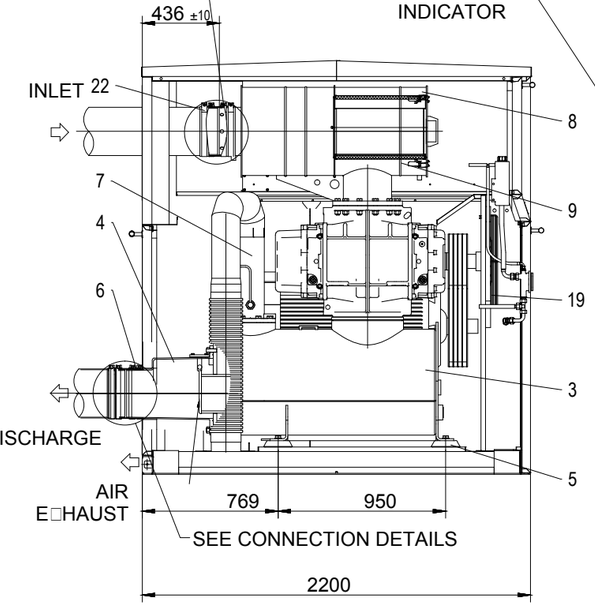

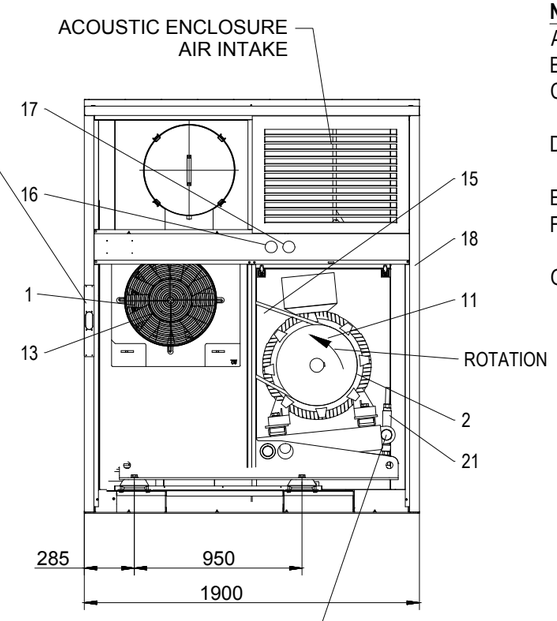

NOTES:

A. ASSEMBLY WEIGHT WITHOUT MOTOR: 3630 KG
B. PAINT: AERZEN STANDARD BLUE
C. 1M OF FREE SPACE AT THE FRONT OF THE PACKAGE IS RECOMENDED FOR MAINTENANCE ACCESS
D. MOTOR: WEG 400T FRAME REPRESENTED, OTHER SIZE AND MANUFACTURER AVAILABLE
E. NOT SHOWN ON DRAWING
F. FOR VARIABLE SPEED APPLICATIONS, CONSTANT TORQUE VFD ARE REQUIRED
G. OPTIONAL

Process Blowers:
Tag numbers:

16-B-401-A/B/C
16-F-401-A/B/C
16-PSV-401-A/B/C
16-HV-403-A/B/C
16-PI-403-A/B/C
16-CV-401-A/B/C

REVISION DETAILS						
REV	DRAWN BY	DATE	REVIEWED	DATE	DETAILS	AREA
C	-	23/02/15	-	23/02/15	UPDATE ON GENERAL ARRANGMENT DRAWING	
B	-	18-10-12	-	18-10-12	UPDATE ON GENERAL ARRANGMENT DRAWING	
A	-	18/06/12	-	18/06/12	RELEASE	-

AERZEN

AERZEN CANADA
980 RUE VALOIS, SUITE 100, VAUDREUIL QC J7V 8P2
(450) 424-3966 PH, (450) 424-3985 FX

GEN 5 - GM 90S
DN 250 - PRESSURE

DWG NO. ZG-01515

DRAWN BY -
REVIEWED BY -

THIRD ANGLE PROJECTION

DATE 18 JUNE 2012
REV C

SCALE: NONE
SIZE: B
SHEET: 1 OF 1

Process Blowers:
Tag: 16-B-401-A/B/C

AERZEN GM 90S DELTA PACKAGE, PRESSURE

INLET FLOW

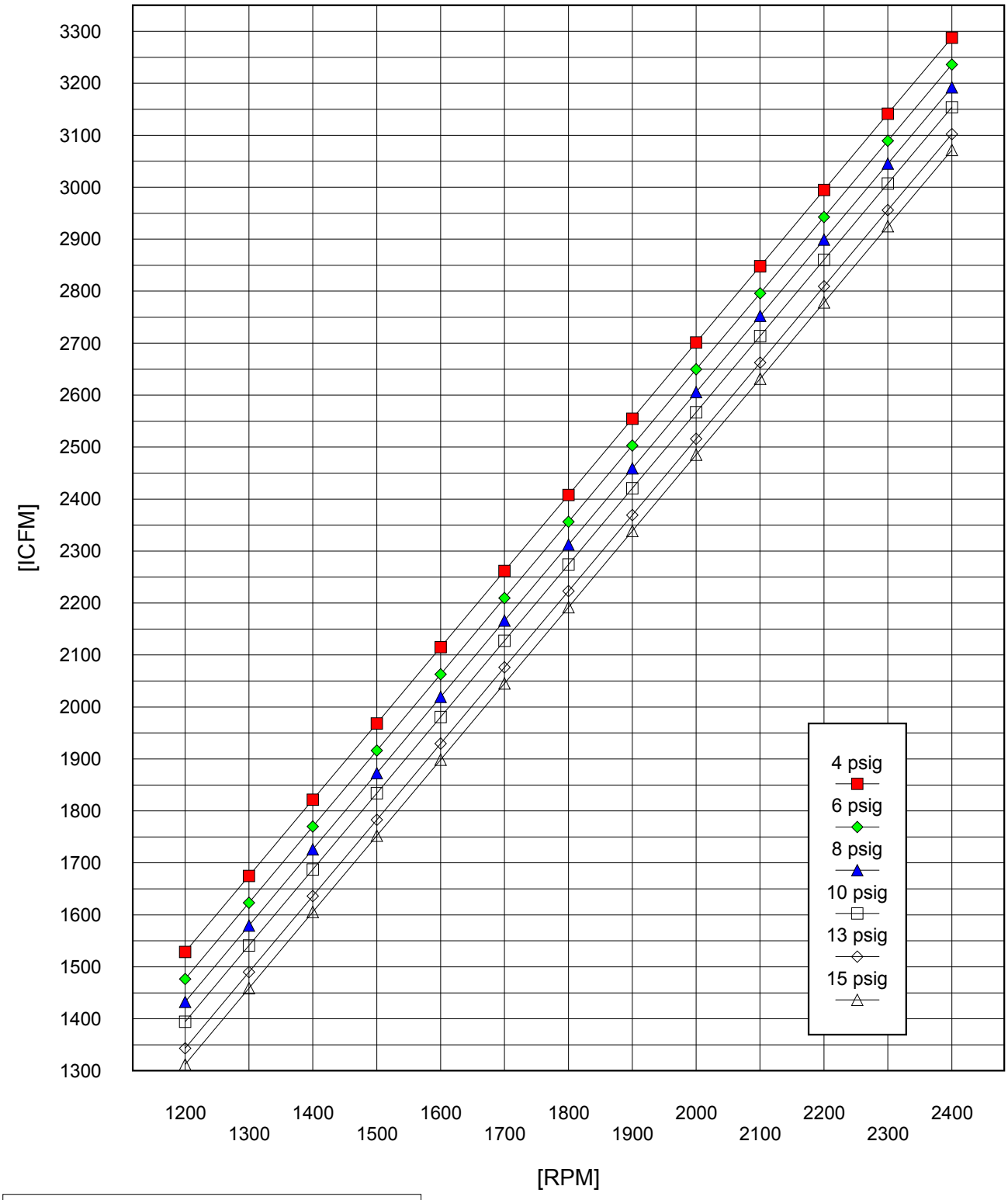

Performance data based on air @ 68 deg.F/ 14.7 psia inlet.

See temperature chart on second sheet for allowable operating range.

AERZEN GM 90S DELTA PACKAGE, PRESSURE

DISCHARGE TEMPERATURE

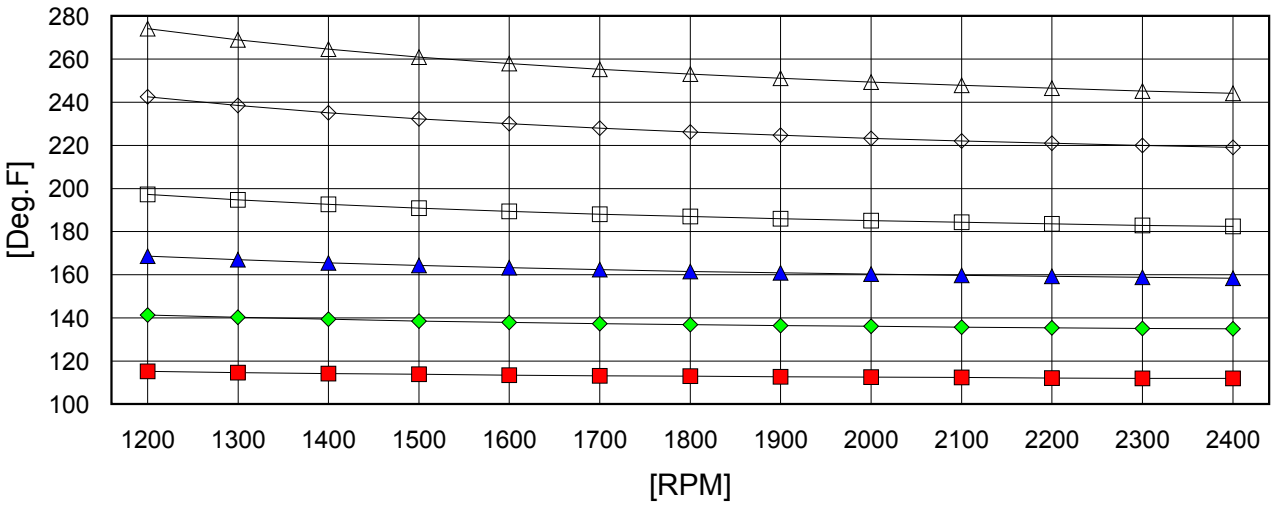

MAXIMUM ALLOWABLE DISCHARGE TEMPERATURE: 285 deg.F
Performance data based on air @ 68 deg.F/ 14.7 psia inlet.

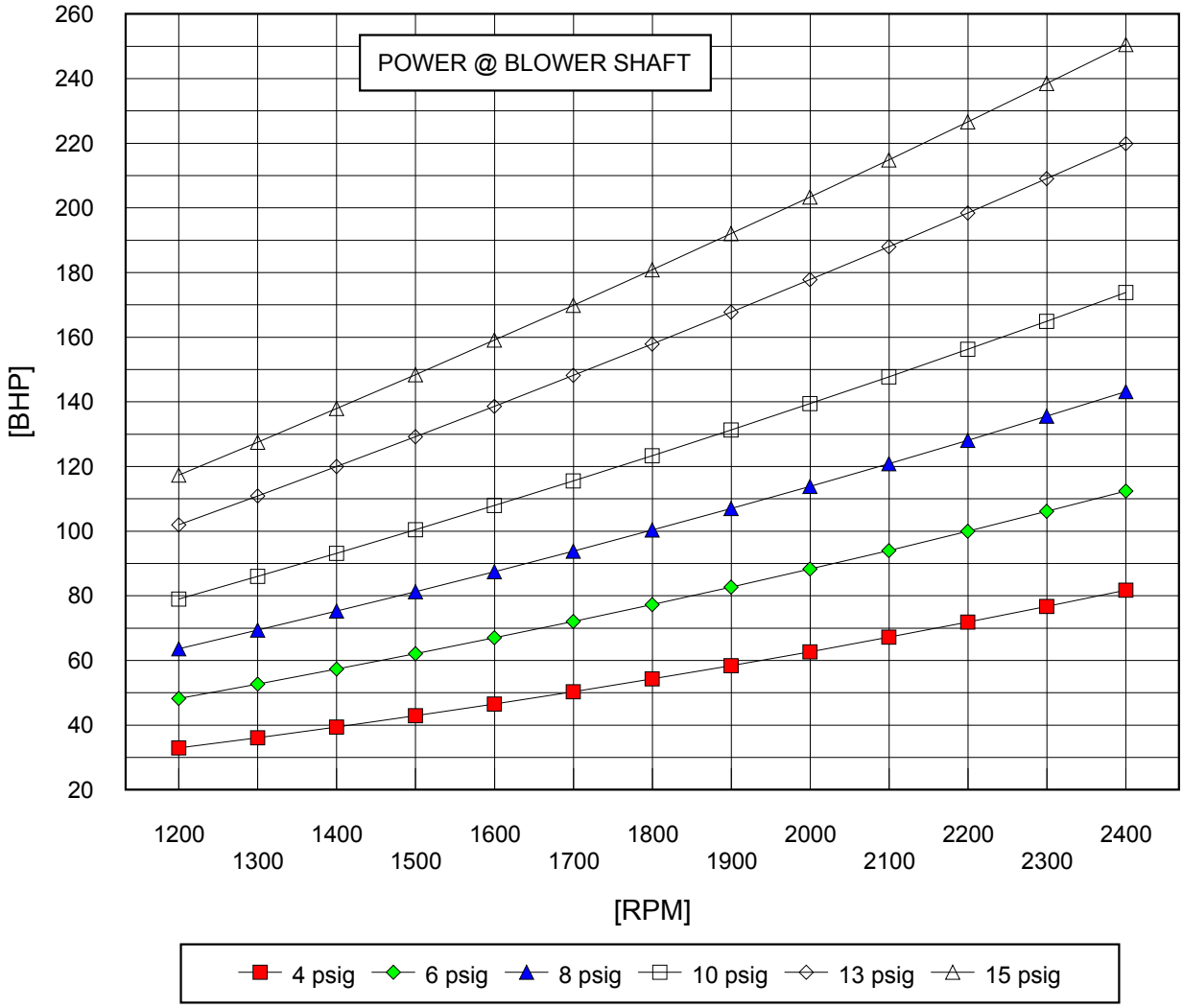

4000323950 | ZTD | 00
Aerzener Maschinenfabrik GmbH
Reherweg 28 - D-31855 Aerzen - Telefon (0 51 54) 81 0 - info@aerzener.de - www.aerzener.com

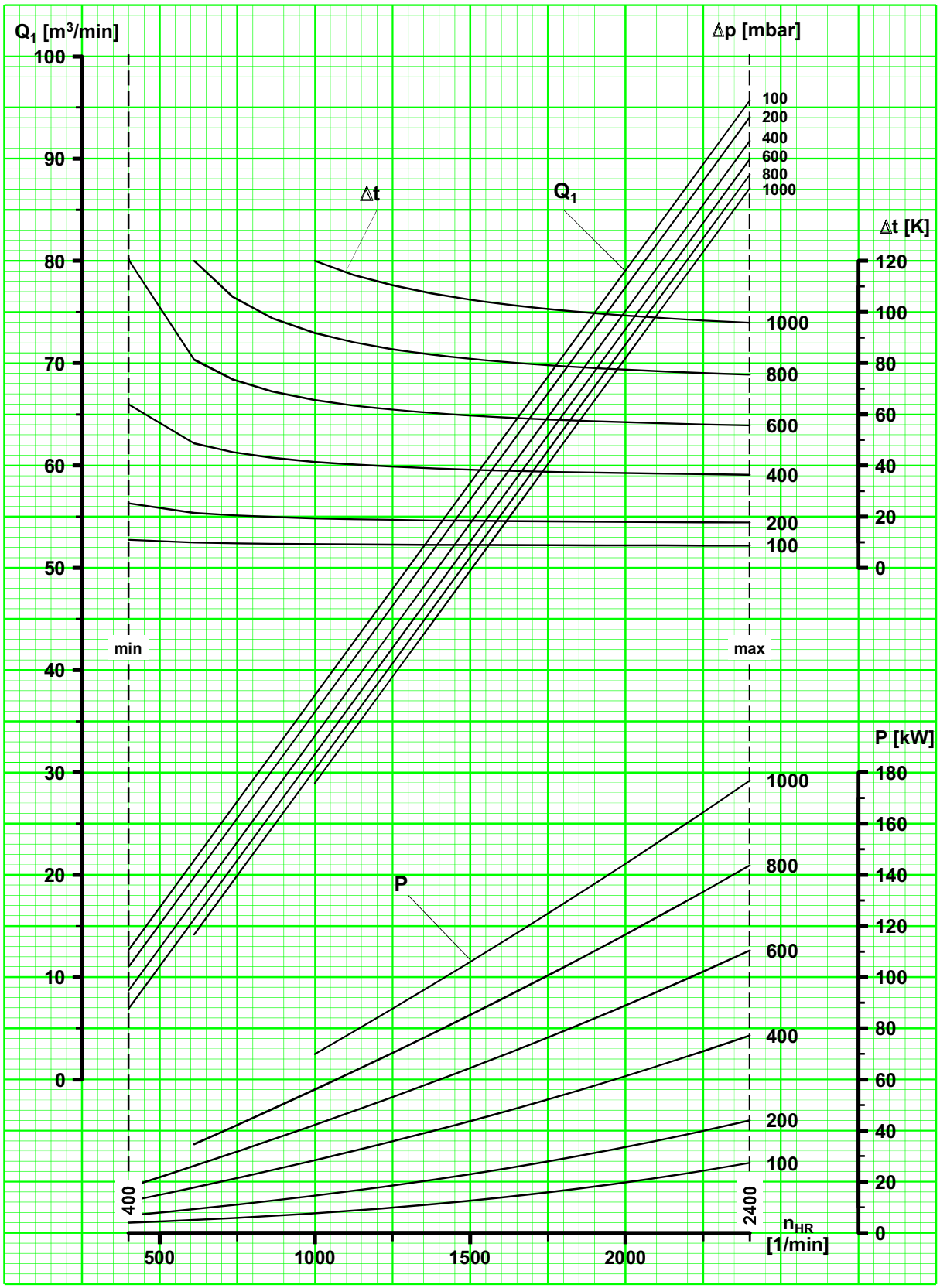

Q_1 : Ansaugvolumenstrom (Luft) bei p_1 = 1,0 bar und t_1 = 20°C	intake volume flow (air) at p_1 = 1.0 bar and t_1 = 20°C	débit aspiré (air) pour p_1 = 1,0 bar et t_1 = 20°C
n_{HR} : Hauptrotordrehzahl	main rotor speed	vitesse du rotor principal
n_V : Antriebswellendrehzahl	drive shaft speed	vitesse de l'arbre d'entraînement
P : Leistungsbedarf an der Kupplung	power required at the coupling	puissance absorbée à l'accouplement
t : Temperaturerhöhung	temperature rise	élévation de température
p : Druckerhöhung	pressure difference	pression différentielle

Leistungsdiagramm - Überdruck - für Drehkolbengebläsestufe
performance diagram - overpressure - for stage of rotary piston blower
courbes de fonctionnement - fonctionnement en pression - pour étage de surpresseur à pistons rotatifs

GM 90 S

nV / nHR = 1	04/2016 TRD / Hallemann	G2-424 - XL SAP 4000323950 - 00

TECO Westinghouse MOTORS (CANADA) INC.	
	Date: June 1, 2022

Process Blowers:
Tag: 16-B-401-A/B/C

Technical Documentation

PDH1504

Optim TEFC | AEHH8N

Date: June 1, 2022

TECO Westinghouse
MOTORS (CANADA) INC.

Date: June 1, 2022

Dimensional Drawing

Catalogue	Type	HP	RPM	Voltage	Hz	Frame Size
PDH1504	AEHH8N	150	1800	460	60	445T

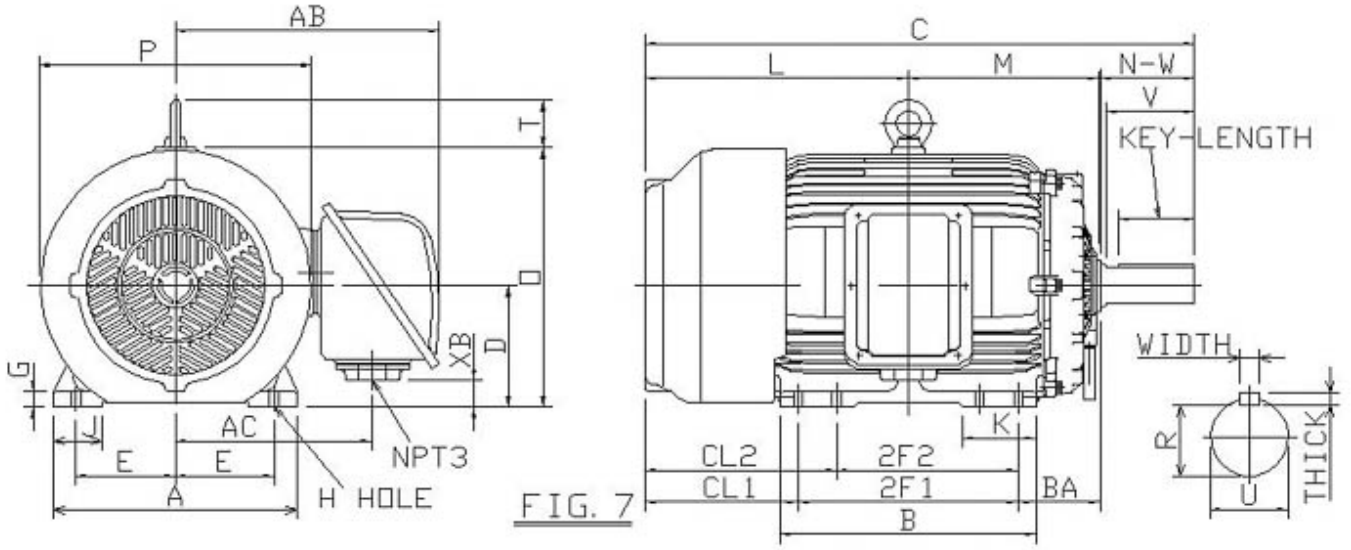

FIG. 7

Mounting					A	B	C	CL1	CL2	D	G
E	2F1	2F2	H	BA							
9	16.5	14.5	0.81	7.5	22.05	17.5	46.4			11	1.4

J	K	L	M	O	P	T
4.35		22.15	15.4	23.6	24.76	4.33

Terminal Housing			
AA	AB	AC	XB
3	24.02	17.91	2.4

Shaft Extension			Key			Keyseat
N-W	U	V	Width	Thick	Length	R
8.5	3.375	8	0.875	0.875	6.91	2.88

Bearings		Weight Lbs	Drive Method	Dimensions
DE	NDE			
6318	6316	1703	Direct Coupling / Belt Drive	Inches

TECO Westinghouse MOTORS (CANADA) INC.	
	Date: June 1, 2022

Technical Data Sheet

Motor Type: AEHH8N	Catalogue No: PDH1504

Nameplate Information

HP	Pole	RPM	Frame	Voltage	Hz	Phase
150	4	1783	445T	460	60	3
Enclosure	Ins. Class	Service Factor	Time Rating	NEMA Design	Rated Amb.	Rated Altitude
TEFC	F	1.15	Continuous	B	-40 to 40 °C	<1000 m

Typical Performance

Efficiency (%)				Power Factor (%)		
Full Load		3/4 Load	1/2 Load	Full Load	3/4 Load	1/2 Load
Nom.	Min.					
95.8	95	95.4	94.5	85	83	78

Torque				Current (A)		
Full Load (lb-ft)	Locked Rotor (% FLT)	Pull Up (% FLT)	Break Down (% FLT)	No Load	Full Load	Locked Rotor
441.7	130	100	220	52.1	172.5	1085

NEMA KVA Code	Inertia (WR^2)			Safe Stall Time (s)		Noise Level Sound Press. dB(A)
	Rotor ($lb\text{-}ft^2$)	NEMA Load ($lb\text{-}ft^2$)	Max. Allowable ($lb\text{-}ft^2$)	Cold	Hot	
G	52	640	933.36	20	15	81

VFD Duty Information

Max HP	Current (A)	Speed Range		VFD		S.F.
		Constant Torque	Variable Torque	Carrier Hz	Type	
150	172.48	12-60Hz	3-60Hz	3-6kHz	VPWM or CPWM	1

Hazardous Locations Information

CSA Certified	
Class I, Div 2, Groups B, C & D Class I, Zone 2, Groups IIB+H2, IIB & IIA	
Temp Code (Sinewave / VFD)	T3 / T3

Additional Certifications

Other Certification
Class II, Div 2, Groups F & G

Additional Information

Bearings		Approx. Weight
DE	NDE	lbs
6318	6316	1703

TECO Westinghouse MOTORS (CANADA) INC.	
	Date: June 1, 2022

Nameplate Drawing

Optim TEFC

TYPE	AEHH8N	CAT. NO.	PDH1504		
OUTPUT	150 HP 111.9 kW	FRAME	445T	TEFC	
R.P.M.	1783	POLE	4	INS.	F
VOLTS	460	PHASE	3	Hz	60
AMPS	172.5	CODE	G	S.F.	1.15
AMBIENT	40 °C	NOM. EFF. 95.8		MIN. EFF. 95	
BEARINGS	6318 / 6316			RATING Cont.	

SER. NO.	TBD	DESIGN	B	WT. 1703 LBS

PWM VFD DUTY	VT	CT	CP	S.F.
	3-60Hz	12-60Hz	60-90Hz	1

Connection Diagram

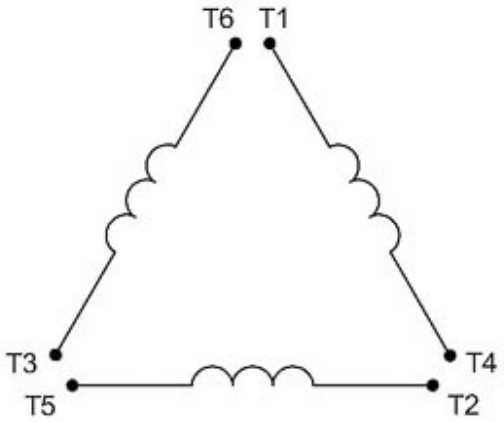

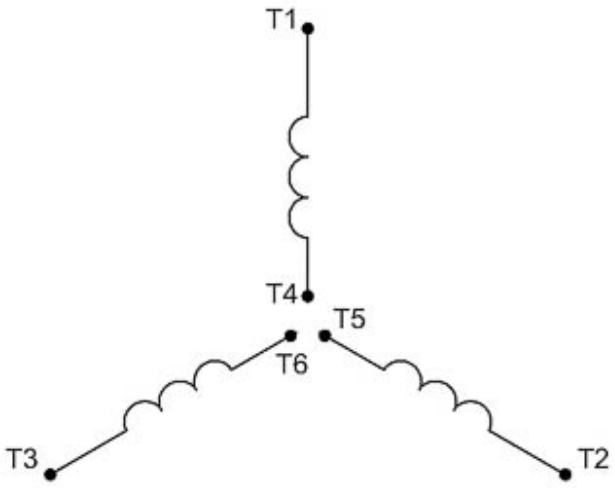

6 LEAD SINGLE VOLTAGE WYE/DELTA					
CONNECTION		L1	L2	L3	JOIN
START	WYE	1	2	3	4&5&6
RUN	DELTA	1,6	2,4	3,5	-

WD_6YD

TECO Westinghouse MOTORS (CANADA) INC.	
	Date: June 1, 2022

Thermal Limit Curves

Motor Type: AEHH8N	Catalogue No: PDH1504	Family: Optim TEFC

HP	150	Safe Stall Time		Full Load A	172.5 A
Voltage	460V 60Hz	Hot	15 s	% Inrush	629 %
RPM	1800	Cold	20 s	Locked Rotor A	1085 A

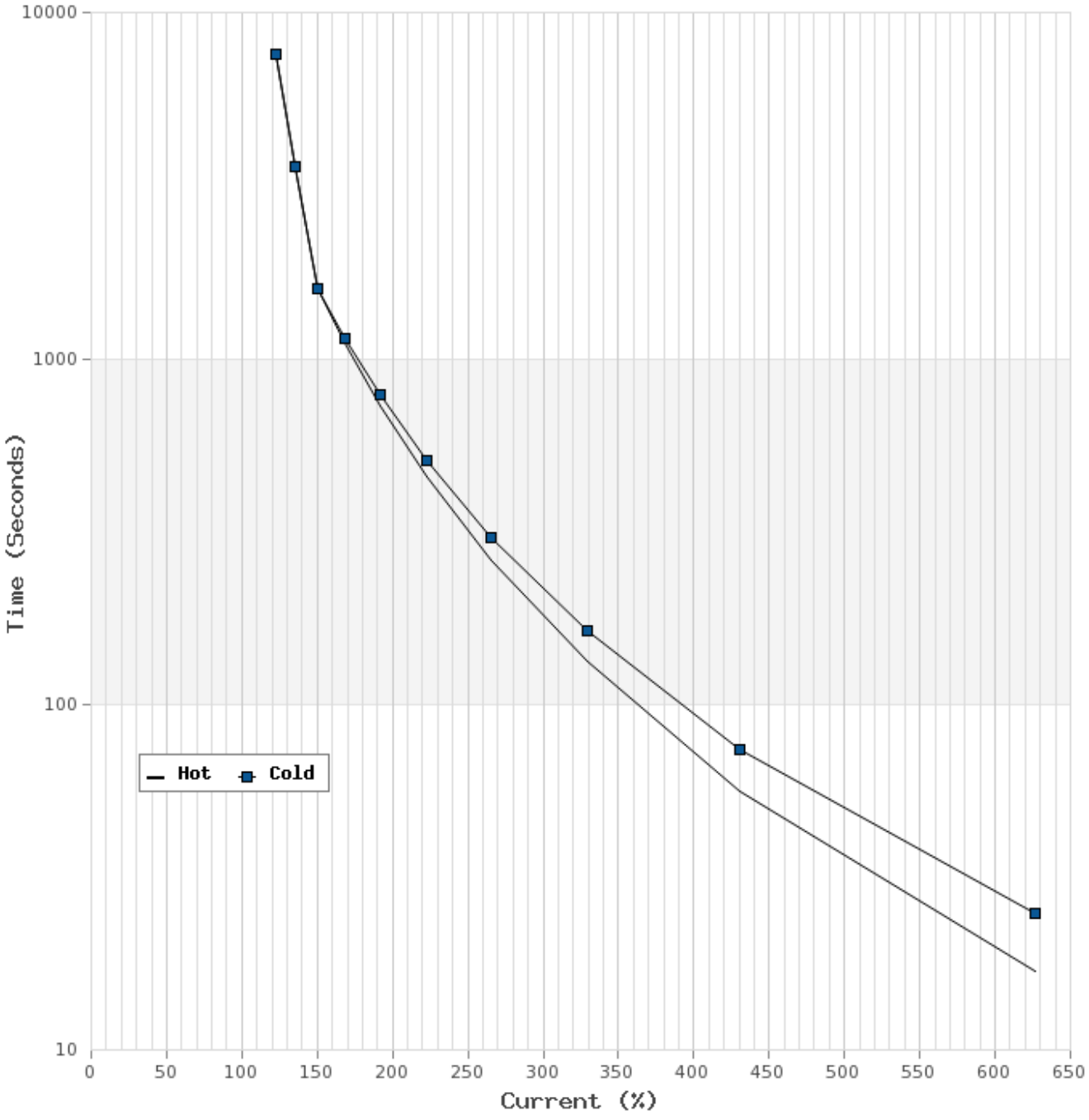

TECO Westinghouse MOTORS (CANADA) INC.	
	Date: June 1, 2022

T-N and I-N Curves

Motor Type: AEHH8N	Catalogue No: PDH1504	Family: Optim TEFC

HP	150	Full Load T	441.7 lb-ft	Full Load A	172.5 A
Voltage	460V 60Hz	Locked Rotor T	130 %	Locked Rotor A	1085.0 A
RPM	1800	Pull Up T	100 %	Break Down T	220 %

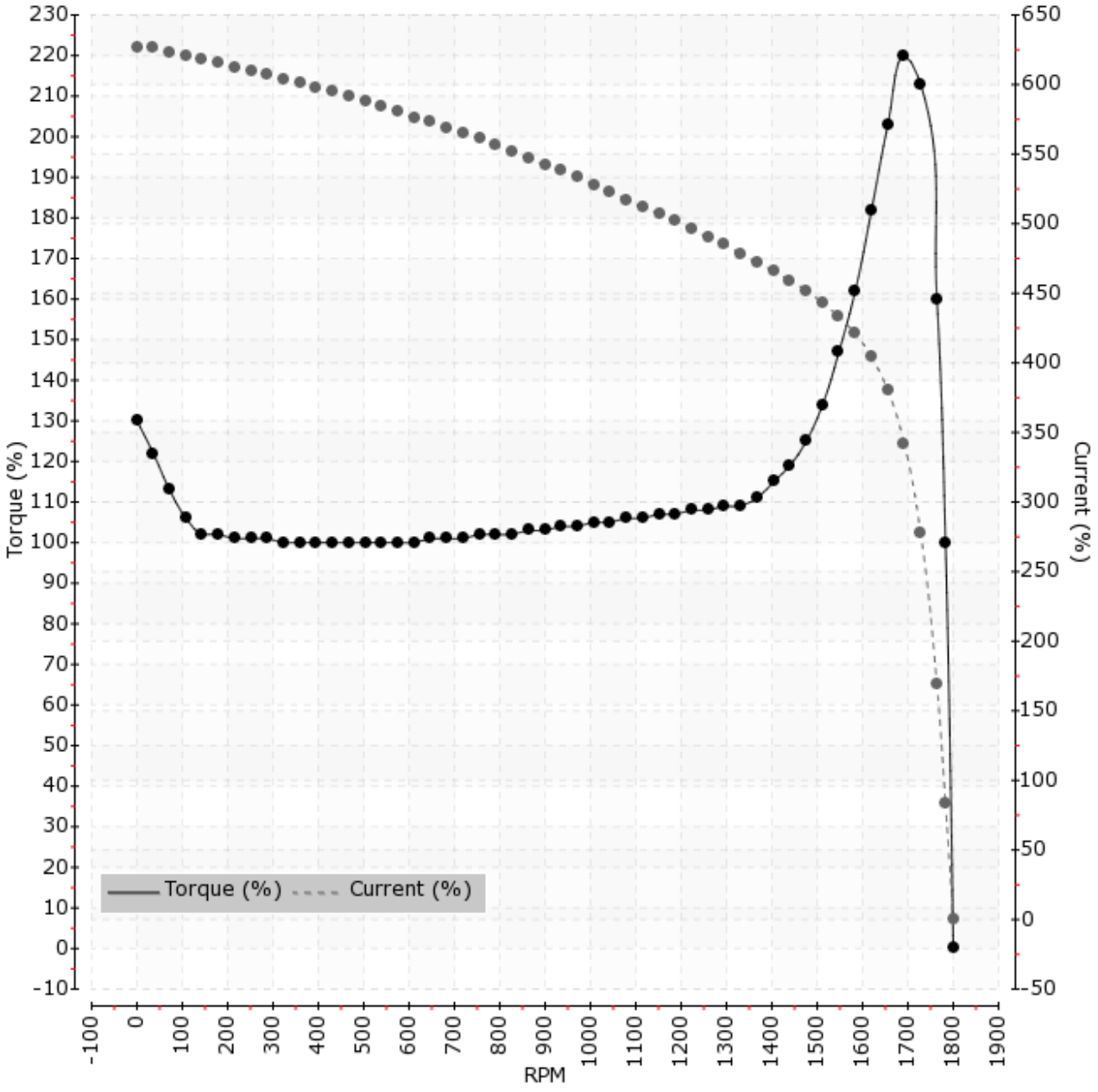

Backpulse Pump
TAG: 20-P-610-A/B

Curve number	Pump performance curves	SULZER
Reference curve XFP255J-CB2 60 HZ	**XFP255J-CB2 60 HZ**	

					Discharge	Frequency
					DN250	60 Hz
Density	Viscosity	Test Standard			Rated speed	Date
62.32 lb/ft³	1.077E-5 ft²/s	ISO 9906, HI 11.6/14.6 Gr 2B			1181 rpm	2023-03-06
Flow	Head	Shaft power	Power input	Rated power P2	Hyd. efficiency	NPSH
3703 US g.p.m	44 ft	40.1 kW	42.5 kW	43 kW	76.4 %	17.7 ft

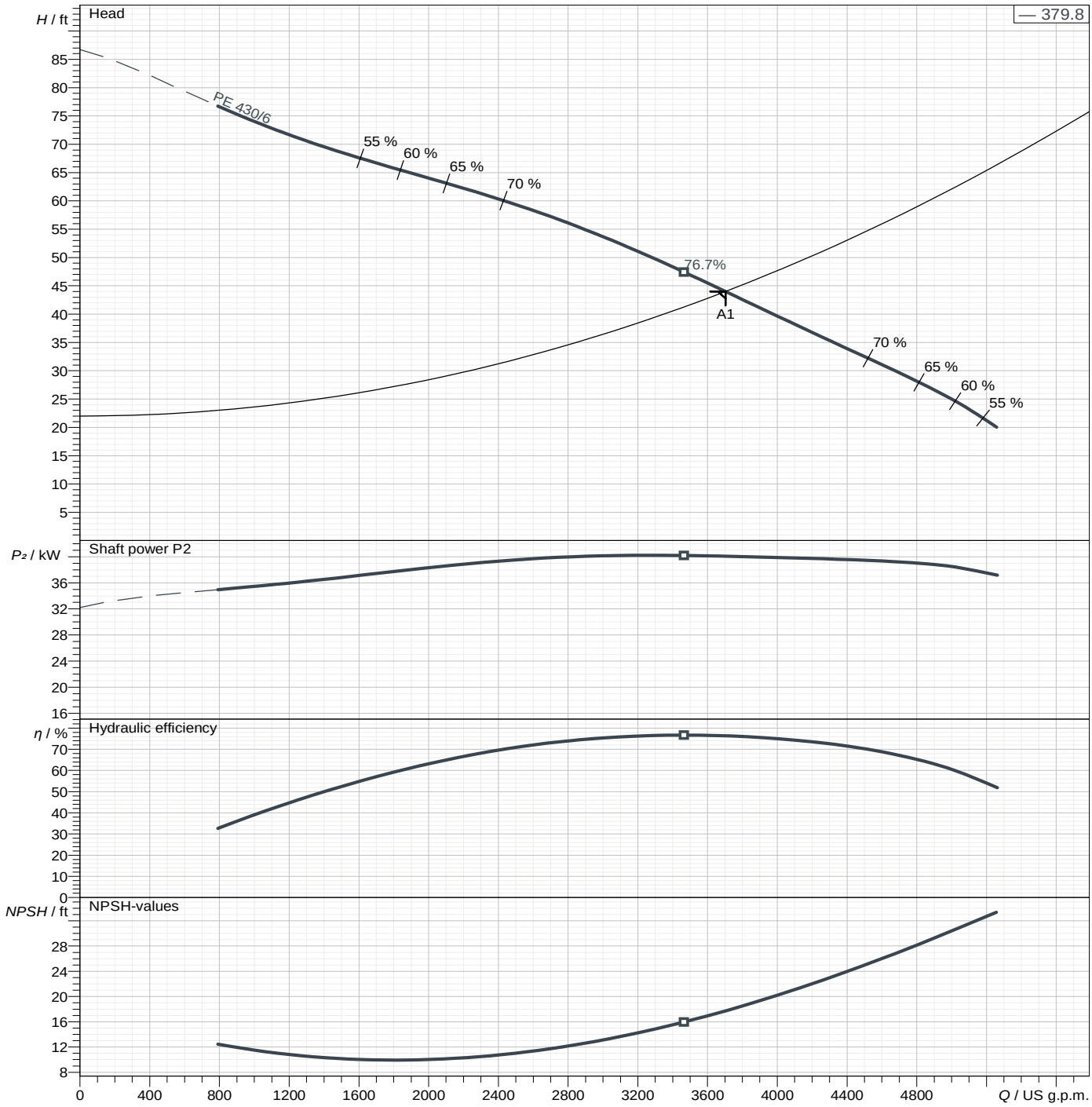

Wet well vertical installation 2"

Impeller size	N° of vanes	Impeller	Solid size	Revision
379.8 mm	2	Contrablock Plus impeller	90 x 120 mm	

Sulzer reserves the right to change any data and dimensions without prior notice
and can not be held responsible for the use of information contained in this software.

Frequency 60 Hz	PE4B

Motor performance curve

PE 430/6

SULZER

Rated power	Service factor	Nominal Speed	Number of poles	Rated voltage	Date
43 kW	1	1180 rpm	6	480 V	2023-03-06

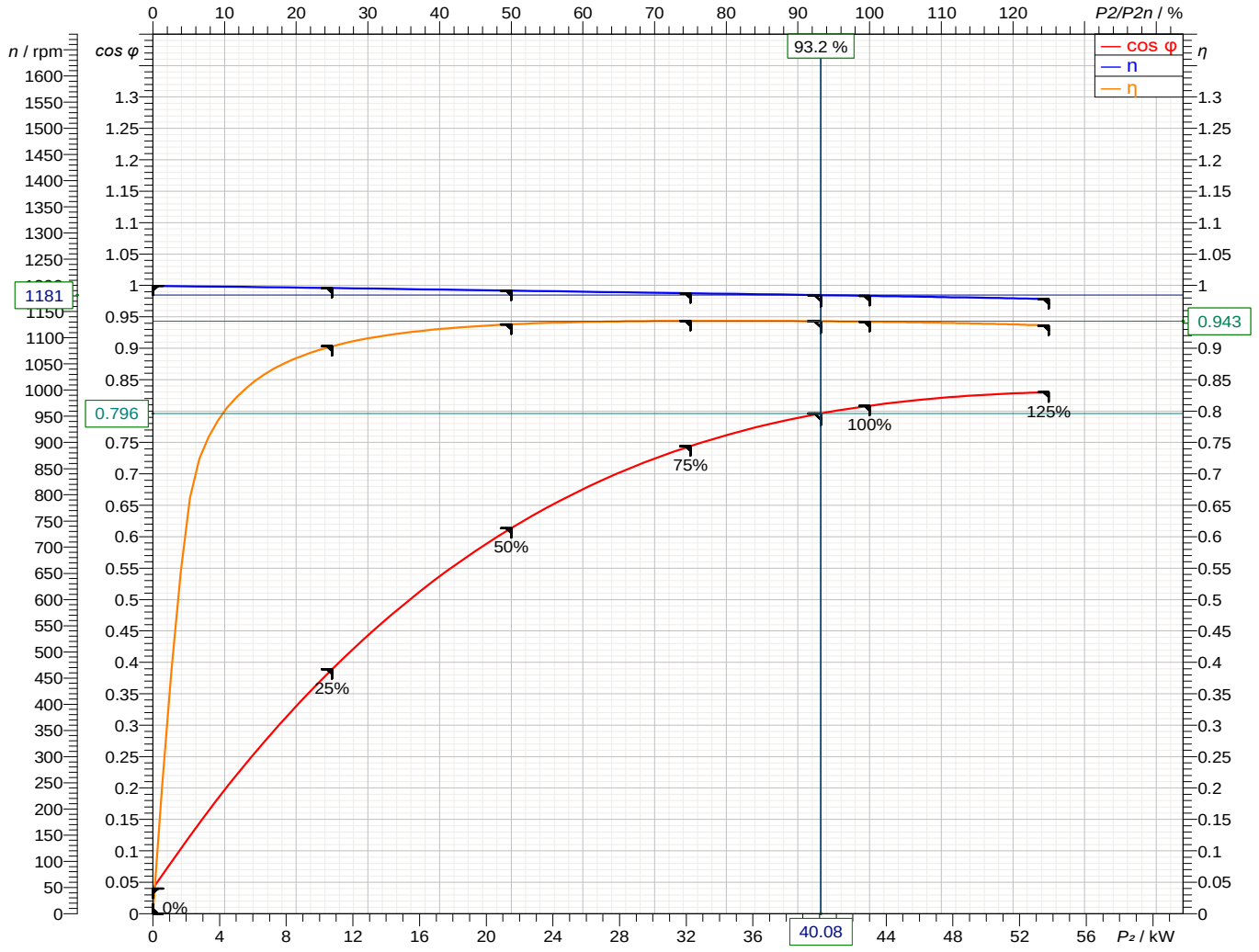

Symbol	No load	25 %	50 %	75 %	100 %	125 %
P_2 / kW	0	10.75	21.5	32.25	43	53.75
P_1 / kW	1.02	11.9	22.92	34.18	45.64	57.41
I / A	30.7	36.79	44.92	55.23	67.9	83.2
cos φ	0.03997	0.3892	0.6137	0.7443	0.8084	0.83
n / rpm	1199	1195	1190	1185	1180	1174
s / %	0.08333	0.4167	0.8333	1.25	1.667	2.167
M / lbf ft	0	63.36	127.3	191.7	256.7	322.5

Tolerance according to VDE 0530 T1 12.84 for rated power

Starting current	Starting torque	Moment of inertia	No. starts per hour
441 A	642 lbf ft	14.5 lb ft²	15

Sulzer reserves the right to change any data and dimensions without prior notice
and can not be held responsible for the use of information contained in this software.

SULZER

Submersible Sewage Pump Type ABS XFP

XFP 255J-CB2 | 10", 6 Pole, 3-Phase, 60 Hz, PE4

Submersible Motor Specifications, PE4 Frame

Motor Design			NEMA design B, squirrel cage induction
Motor Type			Fully enclosed Premium Efficiency submersible, IP68 protection rating
Motor Efficiency Standard and Rating			IEC 60034-30, IE3 rating
Motor Efficiency Test Protocol			IEC 60034-2-1
Insulation Material			Class H, 180ºC (356ºF), copper windings
Motor Filling Medium			Air
Temperature Rise			Class A
Maximum Fluid Temperature			40ºC (104ºF) continuous, 50ºC (122ºF) intermittent
Cooling System		**OPT**	Closed-loop, non-toxic glycol/water mixture (⅓ / ⅔)
Motor Protection	**Thermal**	**STD**	Normally closed bimetallic switch in each phase, connected in series, 140ºC (284ºF) +/- 5ºC (41ºF) opening temperature
		OPT	STD plus: upper and lower bearing bimetallic switches **or** 100Ω RTD (PT100) in winding (option of one RTD or three RTDs in stator) and RTDs in lieu of upper and lower bearing bimetallic switches
	Leakage	**STD**	Moisture detection probe in seal sensing chamber (for use with appropriate relay)
		OPT	STD plus: probes in motor housing and junction chamber
Sensing Chamber Filling Medium			Oil
Bearing Type	**Upper**		Cylindrical roller, permanently lubricated
	Lower		Dual angular contact ball bearings plus single cylindrical roller bearing, permanently lubricated
Motor Starter Types			Suitable for use with electronic soft starters, and PWM type Variable Frequency Drives [1]
Maximum Starts per Hour			10 evenly spaced w/ soft starters; N/A with PWM type VFDs
Inverter Duty Rating			Motors meet NEMA MG1, part 31 requirements
Maximum Submergence			20 meters (65 feet)
Available Voltages			230, 460, 600 (consult factory for other voltages)
Voltage Tolerance from Rated			+/-10%
Agency Approvals			Factory Mutual, CSA
Explosion Proof Rating			NEC 500 Class 1, Division 1, Group C & D, Class T3C max surface temp



The picture above may differ from the actual product.
For illustrative purposes only.

[1] Output filters may be required on VFDs. See document **DS-E00-001** for details.

Motor Ratings, PE4 Frame

Motor Model	Input Power (P1)	Rated Power Output (P2)	Nominal RPM	Rated Voltage	Full Load Amps	Locked Rotor Amps	NEMA Code Letter	NEMA Service Factor	Motor Efficiency at % Load			Power Factor at % Load		
									100	75	50	100	75	50
PE 210/6	22.6 kW	21 kW 28 HP	1184	230 460 600	69.9 35.0 26.8	461 231 177	H	1.3	93.0	92.9	91.7	.811	.752	.628
PE 250/6	26.9 kW	25 kW 33.5 HP	1186	230 460 600	85.0 42.5 32.6	638 319 245	J	1.3	93.0	92.5	90.9	.794	.727	.597
PE 350/6	37.2 kW	35 kW 47 HP	1183	230 460 600	118.8 59.4 45.5	855 428 328	J	1.3	94.1	94.0	93.2	.786	.712	.576
PE 430/6	45.7 kW	43 kW 58 HP	1180	230 460 600	141.7 70.9 54.3	921 461 353	H	1.3	94.2	94.4	93.8	.808	.744	.614

DS-E02-157 REV: 1 DATE: 10/16 Specifications Subject to Change Without Notice

© Sulzer

Scan For More Info

Cable Data, PE4 Frame

	Motor	Motor Voltage	Cable Qty	Cable Type	Cable Nominal Outside Diameter +/- .5mm (.02")	
					Power	Ground
Power Cable	PE 210/6	230	1	G-GC 4-3	30.2mm (1.19")	Integrated w/ Power
		460	1	G-GC 8-3	24.6mm (0.97")	Integrated w/ Power
		600	1	G-GC 8-3	24.6mm (0.97")	Integrated w/ Power
	PE 250/6	230	1	G-GC 2-3	34.0mm (1.34")	Integrated w/ Power
		460	1	G-GC 8-3	24.6mm (0.97")	Integrated w/ Power
		600	1	G-GC 8-3	24.6mm (0.97")	Integrated w/ Power
	PE 350/6	230	2	G-GC 4-3	30.2mm (1.19")	Integrated w/ Power
		460	1	G-GC 6-3	26.7mm (1.05")	Integrated w/ Power
		600	1	G-GC 8-3	24.6mm (0.97")	Integrated w/ Power
	PE 430/6	230	2	G-GC 4-3	30.2mm (1.19")	Integrated w/ Power
		460	1	G-GC 4-3	30.2mm (1.19")	Integrated w/ Power
		600	1	G-GC 6-3	26.7mm (1.05")	Integrated w/ Power

	Motor Monitoring Type [3]	Cable Qty	Cable Type	Cable Nominal Outside Diameter +/- .5mm (.02")
Control Cable	Std monitoring	1	SOOW 16/4	10.6mm (0.42")
	Opt full monitoring	1	SOOW 16/8	14.2mm (0.56")
	Opt full monitoring w/ 3 RTDs	1	SOOW 16/12	17.7mm (0.70")
	Opt full monitoring w/ 5 RTDs	2	SOOW 16/10	17.2mm (0.68")
Cable Length	Standard: 15m (49 feet)	Optional: 20m (65 feet), 30m (98 feet); Consult Factory for longer lengths		

[3] See motor protection on page 1. Optional full monitoring systems with RTD options do not include bearing bi-metallic switches.

Pump Data

Discharge Size	10" flanged, compatible with 10" class 125 ANSI flanges									
Suction Size (Wet-Pit / Dry-Pit) [5]	10" undrilled / 10" flanged, compatible with 10" class 125 ANSI flanges, threaded for 12x7/8-9 UNC screws, 30mm (1.2") deep									
Volute Pressure Rating	10 bar (145 psi)									
Impeller Type	Semi-open, 2-vane, Contrablock Plus, w/ Seal Protection System									
Impeller Code	-	-	-	-	-	-				
Impeller Diameter, mm (in.)	340 (13.4)	350 (13.8)	360 (14.2)	370 (14.6)	380 (15.0)	390 (15.4)				
Solids Passage Size, mm (in.)	90x120 (3.5x4.7)	90x120 (3.5x4.7)	90x120 (3.5x4.7)	90x120 (3.5x4.7)	90x120 (3.5x4.7)	90x120 (3.5x4.7)				
Min. Recommended Flow, GPM [6]	1400	1500	1500	1600	1700	1900				

[5] Wet-pit version can be drilled to dry-pit specifications upon request. Consult factory for details. [6] Recommend minimum continuous flow. Consult factory for applications below this flow rate.

Materials of Construction

		Standard	Optional
Power/Control Cable Jacket		Chlorinated Polyethylene (CPE)	
Lifting Hoop		Ductile Iron EN-GJS-400-18 (ASTM A-536; 60-40-18)	Duplex Stainless Steel 1.4470 (ASTM A890, CD3MN Grade 4A)
Cable Connection Chamber		Cast Iron EN-GJL-250 (ASTM A-48, Class 35B)	
Motor Housing		Cast Iron EN-GJL-250 (ASTM A-48, Class 35B)	
Cooling Jacket		Steel 1.0036 (ASTM A-570, Grade D)	
Intermediate Housing		Cast Iron EN-GJL-250 (ASTM A-48, Class 35B)	
Seal Plate/Cooling Chamber		Cast Iron EN-GJL-250 (ASTM A-48, Class 35B)	
Pump and Motor Shaft		Stainless Steel 1.4021 (AISI 420)	Duplex Stainless Steel 1.4462 (UNS S31803)
Impeller		Cast Iron EN-GJL-250 (ASTM A-48, Class 35B) [7]	Duplex Stainless Steel 1.4470 (ASTM A890, CD3MN Grade 4A)
Wear Parts	Impeller Wear Ring	N/A	
	Volute Wear Ring	N/A	
	Bottom/Wear Plate	Cast Iron EN-GJL-250 (ASTM A-48, Class 35B) [7]	Duplex Stainless Steel 1.4470 (ASTM A890, CD3MN Grade 4A)
Volute		Cast Iron EN-GJL-250 (ASTM A-48, Class 35B)	Duplex Stainless Steel 1.4470 (ASTM A890, CD3MN Grade 4A)
External Hardware		Stainless Steel 1.4401 (AISI 316)	
O-Rings and Cable Glands		Nitrile (Buna-N)	Viton®
Mechanical Seals	Lower	Silicon Carbide / Silicon Carbide, Nitrile, 316 SS	Silicon Carbide / Silicon Carbide, Viton®, 316 SS
	Upper	Silicon Carbide / Silicon Carbide, Nitrile, 316 SS	
Lower Bearing Lip Seal		Nitrile (Buna-N)	
Coating/Protection		Two-part epoxy, blue, 120µm (4.7 mil) DFT	Two-part epoxy, blue, 400µm (15.7 mil); Wet-end liquid ceramic coating, 500µm (19.7 mil); Zinc Anodes

[7] Hardening of bottom edge of impeller vane and wear plate surface available. Consult factory for details.

General Data (Standard Materials of Construction & Cable Length)

	PE 210/6	PE 250/6	PE 350/6	PE 430/6		
Overall Height	1503mm (59.2")	1503mm (59.2")	1583mm (62.3")	1583mm (62.3")		
≈ Pump Weight (Non-Cooled)	805 kg (1775 lb)	845 kg (1863 lb)	895 kg (1973 lb)	905 kg (1996 lb)		

DS-E02-157 REV: 1 DATE: 10/16 Specifications Subject to Change Without Notice

© Sulzer

No: M-02.3016 - 03	2
Dat/Nam.: 18.04.2016 / K. Srb	
Cad Code: M_023016	
Technical changes reserved Änderungen vorbehalten Sous réserve de modifications	

XFP 255J-CB2

Dimension sheet PE4 WET WELL Installation

Maßblatt PE4 Nassinstallation

Plan d'encombrement PE4 installation submersible

SULZER

Type Typ Type 50Hz	Type Typ Type 60Hz	Weight Gewicht Poids **OK**		Weight Gewicht Poids **MK**		H		Size
		(~kg)	(~lb)	(~kg)	(~lb)	(mm)	(inch)	
PE 220/4-J		800	1764	840	1852	1503	59.2	A
PE 300/4-J		835	1841	875	1929			
PE 370/4-J		870	1918	915	2018	1583	62.3	B
PE 450/4-J		900	1985	945	2084			
PE 185/6-J	PE 210/6-J-60	805	1775	845	1863	1503	59.2	A
PE 220/6-J	PE 250/6-J-60	845	1863	885	1951			
PE 300/6-J	PE 350/6-J-60	895	1973	940	2073	1583	62.3	B
PE 370/6-J	PE 430/6-J-60	905	1996	950	2095			

Weight: Includes pump, slider bracket and 10m cable
Gewicht: Beinhaltet Pumpe, Halterung und 10m Kabel
Poids: Pompe, coulisseau et 10m de câble

For different cable length see IOM, chapter 1.5
Für abweichende Kabellänge siehe EBA, Kapitel 1.5
Pour des longueurs supérieures, voir la section 1.5 du manuel

For hex.-woodscrew 0,4*2,8 plug 0,5 DIA
Für Skt.-Holzschr.10*70 Dübel Ø12mm
Pour vis à bois hexagonale 10*70 trou de 12mm

Installation instructions "pedestal" 1 597 2507
Installationsanweisung "Fußstück" 1 597 2507
Instruction d'installation du "pied d'assise" 1 597 2507

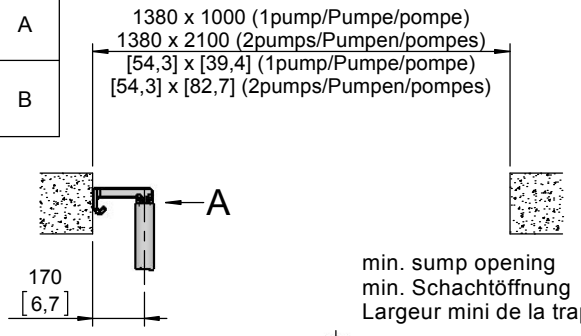

Lifting hoop cross section
Fangbügel-Querschnitt
Section de l'anse de levage

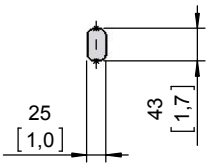

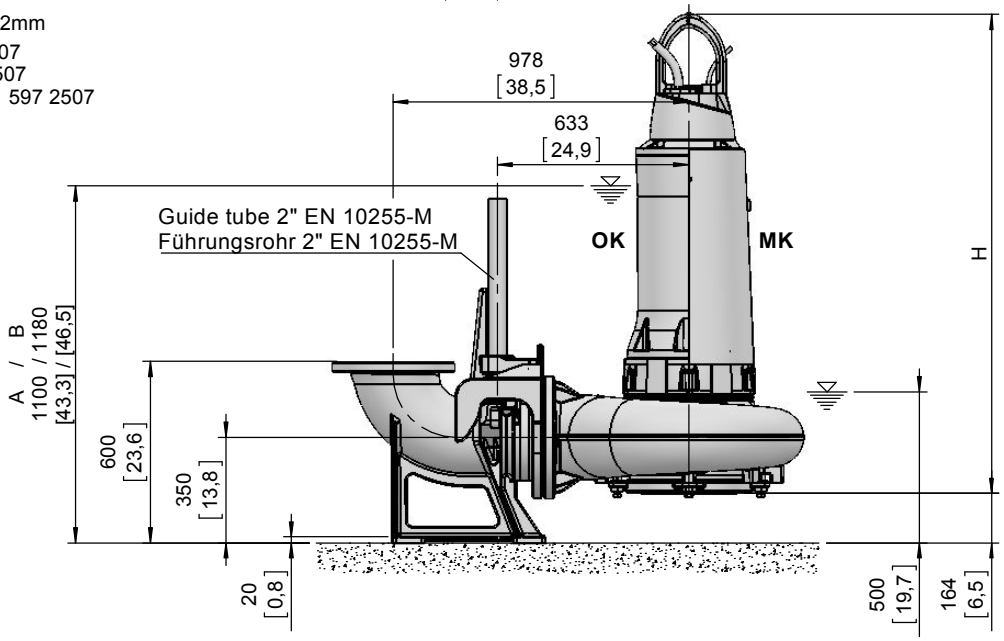

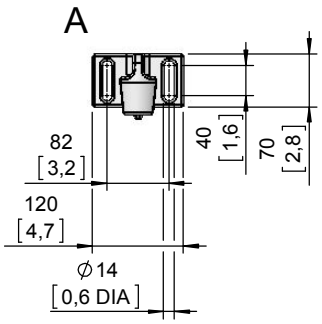

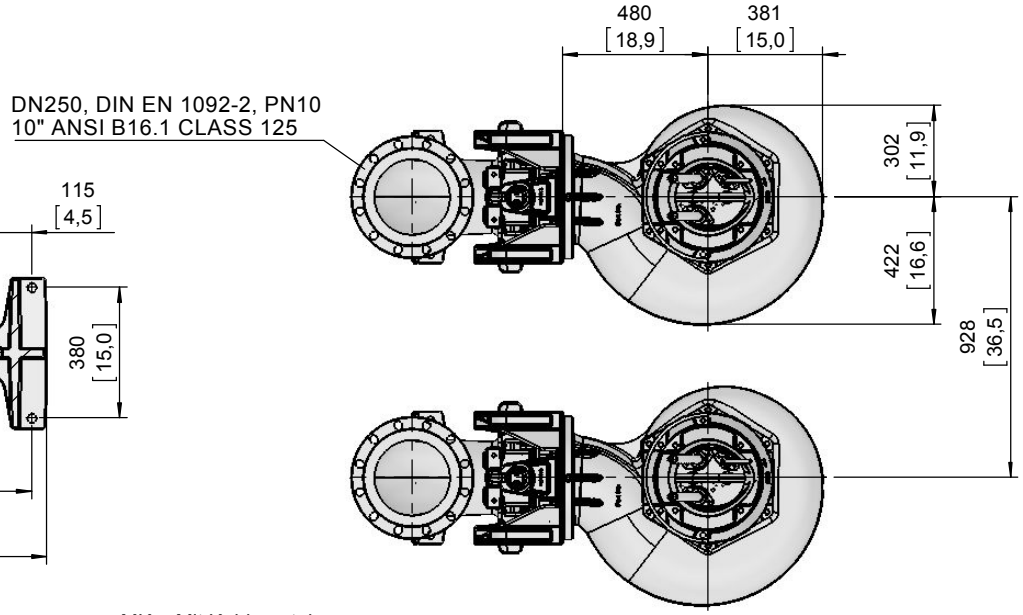

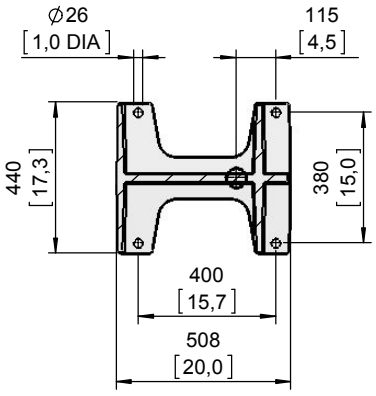

[mm / [inch]]

OK = Ohne Kühlmantel
Without cooling jacket
Sans enveloppe de refroidissement

MK = Mit Kühlmantel
With cooling jacket
Avec enveloppe de refroidissement

SULZER

Pump Performance Datasheet

Customer	: SUEZ Water Technologies & Solutions Canada	Sulzer Reference ID	: CAN.7444-YYZ.22.7444-B0
Customer reference	:	Type / Size	: APT52-16 (SO)
Item number	: 001	Stages	: 1
Service	: RAS PUMP	Based on curve number	: APP52-400_720_SO Rev 1
Quantity	: 1	Date of Last Update	: 22 Feb 2023 11:31 AM

Operating Conditions

Flow, rated	: 6,302.0 USgpm
Differential head / pressure, rated (requested)	: 12.00 ft
Suction pressure, rated / max	: 0.00 / 0.00 bar.g
NPSH available, rated	: Ample
Site Supply Frequency	: 60 Hz

Performance

Speed criteria	: Synchronous
Speed, rated	: 590 rpm
Impeller diameter, rated	: 460 mm
Impeller diameter, maximum	: 533 mm
Impeller diameter, minimum	: 450 mm
Efficiency	: 76.01 %
NPSH (3% head drop) / margin required	: 4.29 / 0.00 m
Ns (imp. eye flow) / Nss (imp. eye flow)	: 3,919 / 8,960 US Units
MCSF	: 2,036.3 USgpm
Head, maximum, rated diameter	: 23.26 ft
Head rise to shutoff	: 93.84 %
Flow, best eff. point	: 5,144.9 USgpm
Flow ratio, rated / BEP	: 122.49 %
Diameter ratio (rated / max)	: 86.30 %
Head ratio (rated dia / max dia)	: 46.11 %
Cq/Ch/Ce/Cn [ANSI/HI 9.6.7-2010]	: 1.00 / 1.00 / 1.00 / 1.00
Selection status	: Acceptable

Liquid

Liquid type	: Water
Additional liquid description	:
Solids diameter, max	: 0.00 mm
Solids concentration, by volume	: 0.00 %
Temperature, rated / max	: 20.00 / 20.00 deg C
Fluid density, rated / max	: 0.998 / 0.998 kg/dm3
Viscosity, rated	: 1.00 cSt
Vapor pressure, rated	: 0.02 bar.a

Material

Material selected	: Cast Iron - ASTM A48 CL35B (53 / F0067)

Pressure Data

Maximum casing/bowl working pressure	: 0.69 bar.g
Maximum allowable working pressure	: 10.00 bar.g
Maximum allowable suction pressure	: N/A
Hydrostatic test pressure	: 15.00 bar.g

Driver & Power Data (@Max density)

Driver sizing specification	: Rated power
Margin over specification	: 0.00 %
Service factor	: 1.00
Power, hydraulic	: 19.09 hp
Power, rated	: 25.12 hp
Power, maximum, rated diameter	: 26.36 hp
Minimum recommended motor rating	: 30.00 hp / 22.37 kW

Hydraulic Performance Acceptance Test: ISO 9906:2012 / HI 14.6-2011 Grade 2B

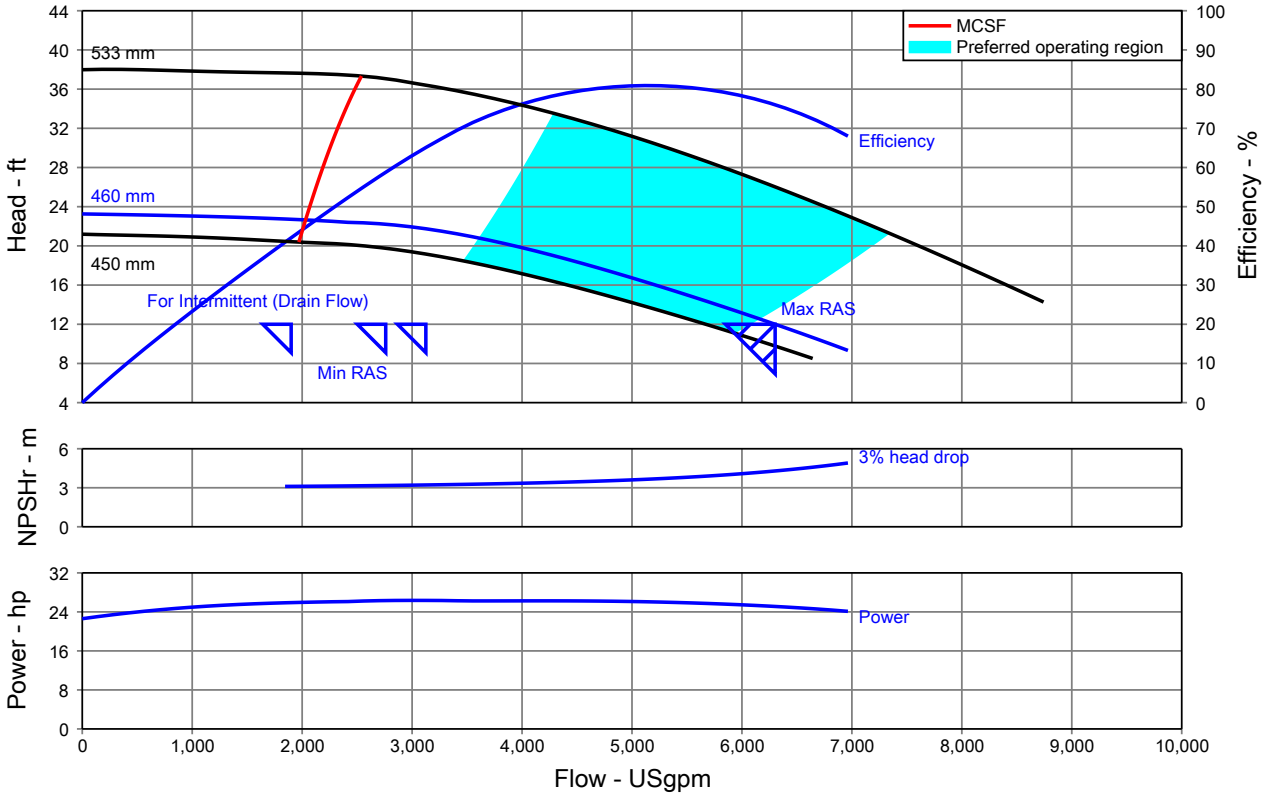

© Sulzer Ltd 2023

Multi-Speed Performance Curve

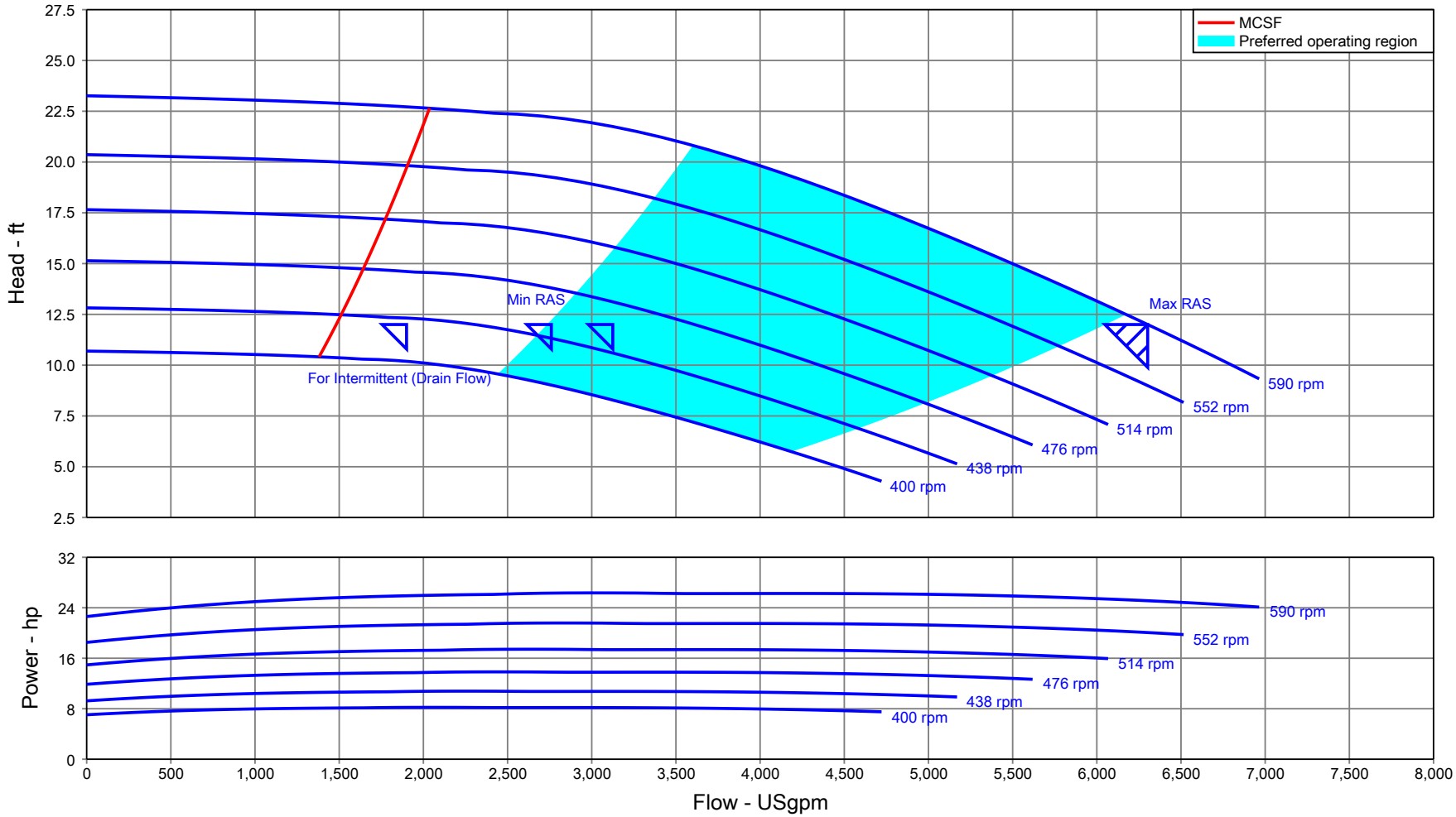

Customer	: SUEZ Water Technologies & Solutions Canada	Stages	: 1	Nominal speed	: 590 rpm
Customer reference	:	Based on curve number	: APP52-400_720_SO Rev 1	Flow, rated	: 6,302.0 USgpm
Item number	: 001	Efficiency	: 76.01 %	Differential head / pressure, rated	: 12.00 ft
Service	: RAS PUMP	Power, rated	: 25.12 hp	Speed, rated	: 590 rpm
Quantity	: 1	NPSH (3% head drop)	: 4.29 m	Impeller diameter, rated	: 460 mm
Sulzer Reference ID	: CAN.7444-YYZ.22.7444-B0	Site Supply Frequency	: 60 Hz	Fluid density, rated / max	: 0.998 / 0.998 kg/dm3
Date of Last Update	: 22 Feb 2023 11:31 AM			Viscosity, rated	: 1.00 cSt
Type / Size	: APT52-16 (SO)			Cq/Ch/Ce/Cn [ANSI/HI 9.6.7-2010]	: 1.00 / 1.00 / 1.00 / 1.00

© Sulzer Ltd 2023

DIMENSIONAL DATA –AHLSTAR
General Arrangement – Pump + Motor + Baseplate – US Units

SPP id: Version 04 > / 120601 / Replaces 981115 / en / **P20045** / 2

Product scope: Assembly (ASSE.0)
Pump type and size: APT52-16
Motor standard: NEMA motor, NEMA
Drive type: Direct drive, DD
Baseplate type: Baseplate for pump and motor, SLP
Pump mounting size: 56

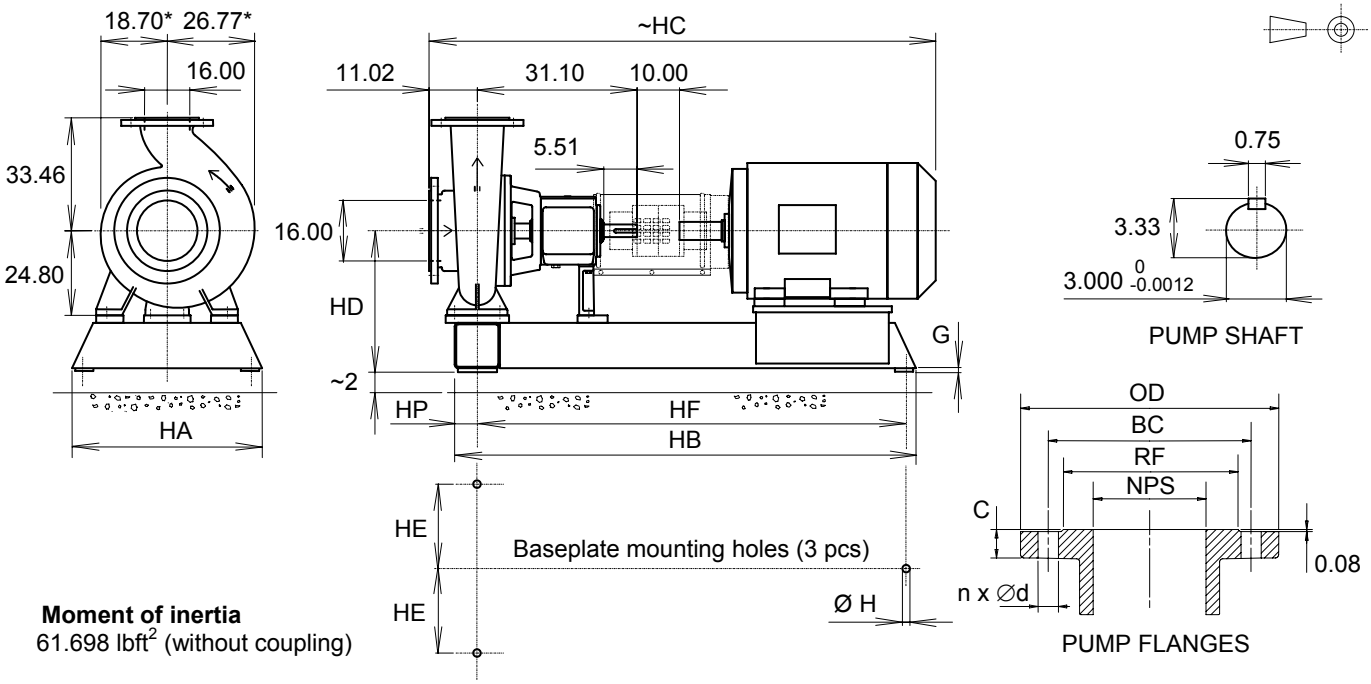

Moment of inertia
61.698 lbft^2 (without coupling)

*) If sealing unit type = Air separating pump, please check the dimensions from bare pump dimensional drawing.

Dimensions in inches

DIMENSIONS													
Primary motor frame	Max motor frame (1	(2	Baseplate	HD	HC	HB	HP	HF	HA	HE	H	G	Weight lbs (3
445T	509LL	449T	12	36.50	97.00	106.25	5.00	99.00	52.75	24.00	1.50	0.69	3020
447T	5011LL	449T	12	36.50	100.00	106.25	5.00	99.00	52.75	24.00	1.50	0.69	3110
447TS	509LS	449TS	12	36.50	98.00	106.25	5.00	99.00	52.75	24.00	1.50	0.69	3020
449T	5011LL	-	12	36.50	106.00	106.25	5.00	99.00	52.75	24.00	1.50	0.69	3110
449TS	509LS	-	12	36.50	103.00	106.25	5.00	99.00	52.75	24.00	1.50	0.69	3020

1. Max. NEMA motor frame, which can be installed onto the baseplate.
2. Max. NEMA motor frame with the same shaft height as primary motor.
3. Weight without coupling and motor.

DRILLING OF FLANGES									
				ASME B 16.1 Class 125			ASME B 16.5 Class 150		
NPS	OD	RF	C	BC	d	n	BC	d	n
16.00	23.82	18.98	1.44	21.25	1.12	16	21.25	1.12	16

COPYRIGHT © SULZER PUMPS FINLAND OY

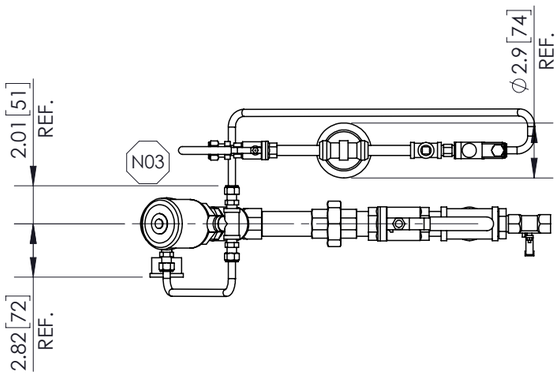

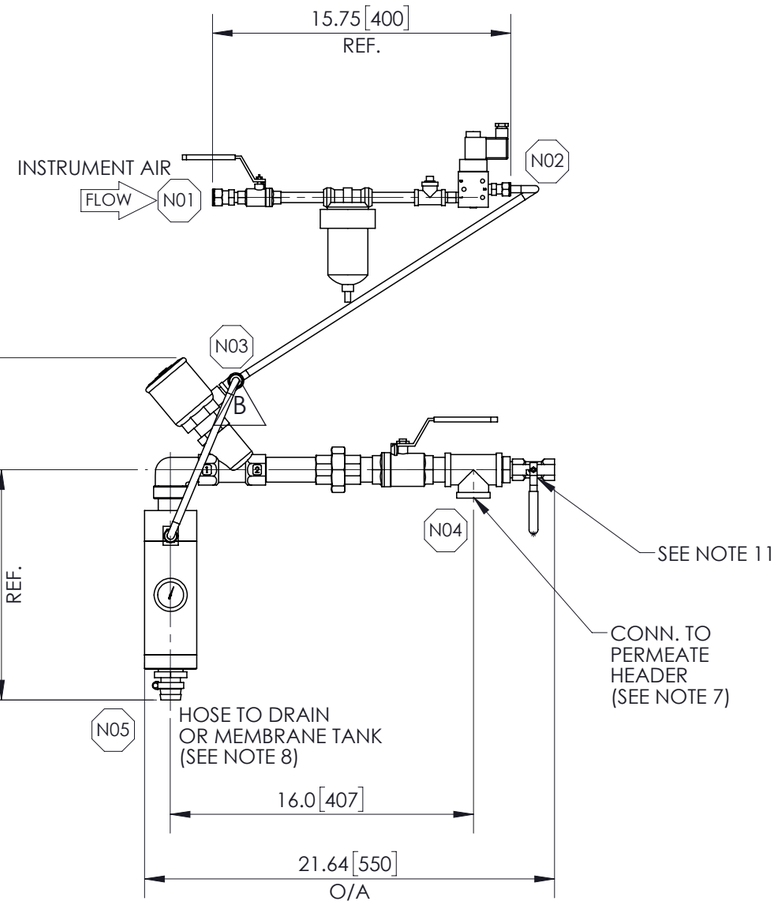

TAG NO:

20-HV-802-1/2/3/4/5/6/7
20-FV-802-1/2/3/4/5/6/7
20-FV-801-1/2/3/4/5/6/7
20-E-801-1/2/3/4/5/6/7
20-HV-801-1/2/3/4/5/6/7
20-HV-803-1/2/3/4/5/6/7
20-PCV-801-1/2/3/4/5/6/7

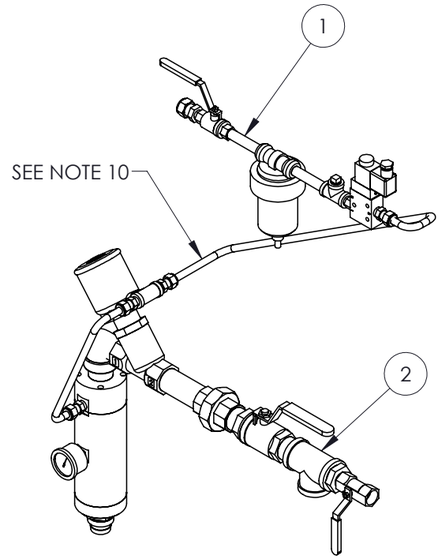

NOZZLE SCHEDULE

NOZZLE	DESCRIPTION	TYPE	SIZE
N01	PLANT INSTRUMENT AIR	ODT	0.50
N02	INSTRUMENT AIR TO EJECTOR SPOOL	ODT	0.38
N03	INSTRUMENT AIR FROM AIR SPOOL	ODT	0.38
N04	PERMEATE/AIR FROM TOP OF PERMEATE PIPE	F-NPT	1.00
N05	TO OPEN DRAIN/MEMBRANE TANK (AIR GAP)	BARB	1.00

NOTES:

1. SHIPPING WEIGHT OF EJECTOR SPOOL - 11.0 LB/[5 KG]
2. SHIPPING WEIGHT OF SOLENOID SPOOL - 4.5 LB/[2 KG]
3. ALL PIPING & EQUIPMENT SHOWN SHALL BE FULLY SUPPORTED BY OTHERS.
4. ALL VALVES & INSTRUMENTS TO BE PROPERLY TAGGED.
5. PIPING MATERIAL:
   - HIGH PRESSURE: SCH. 10, 316 SS / SS TUBING
   - LOW PRESSURE: SCH. 10, 316 SS / SS TUBING
6. ALL DIMENSIONS IN INCHES [MILLIMETERS]
7. CONNECTION TO BE PROVIDED AT HIGHEST POINT ON PIPING BETWEEN PERMEATE HEADER AND PUMP.
8. AIR GAP IS REQUIRED ON EJECTOR DISCHARGE LINE EXHAUST TO MEMBRANE TANK OR DRAIN. 1" BRAIDED HOSE RECOMMENDED (HOSE BY OTHERS).
9. EJECTOR MUST BE INSTALLED VERTICALLY DOWNWARD.
10. THE 3/8" SS TUBING THAT CONNECTS THE TWO SPOOLS TOGETHER IS TO BE PROVIDED AND INSTALLED ONSITE BY OTHERS.
11. VALVE USED AS AIR INLET FOR MEMBRANE PRESSURE DECAY TEST. TO BE CLOSED AT ALL OTHER TIMES WITH HANDLE LOCKED IN PLACE TO PREVENT ACCEDINTAL OPENING.

MM# 3178110 - W/ 24VDC SOLENOID - PLUMBING TABLE

ITEM	QTY.	SAP	DOC#	DESCRIPTION	U/M
1	1	3178024	1319227	PLMB-AIR,316,0.25,24VDC,SS TUBE	EA
2	1	3178021	1319224	PLMB-EJECTOR,316,1.00X0.25,SS TUBE	EA

MM# 3178111 - W/ 120VAC SOLENOID - PLUMBING TABLE

ITEM	QTY.	SAP	DOC#	DESCRIPTION	U/M
1	1	3178025	1319228	PLMB-AIR,316,0.25,120VAC,SS TUBE	EA
2	1	3178021	1319224	PLMB-EJECTOR,316,1.00X0.25,SS TUBE	EA

REV	DESCRIPTION	ECO	DWN	APPR	APPR	DATE
B	REVISED AS NOTED	136201	ES	CM	KW	10 July 20
A	INITIAL DESIGN	135731	XC	RJ	SA	08 Apr 20

PROPRIETARY AND CONFIDENTIAL: THIS DRAWING AND ALL INFORMATION AND KNOWLEDGE CONTAINED OR REFERRED HEREIN ARE THE CONFIDENTIAL AND PROPRIETARY PROPERTY OF SUEZ AND AS SUCH ARE INSTRUMENTS OF SERVICE FOR USE SOLELY WITH RESPECT TO THIS PROJECT. THESE INSTRUMENTS OF SERVICE SHALL NOT BE REPRODUCED, TRANSMITTED, DISCLOSED OR USED OTHERWISE IN WHOLE OR IN PART, WITHOUT PRIOR WRITTEN AGREEMENT BY SUEZ AND MUST BE IMMEDIATELY RETURNED OR DESTROYED UPON REQUEST.

TOLERANCES UNLESS NOTED
DECIMALS: .X, .XX +/-0.50, .XXX
ANGLES: +/-0.5°
FRAC: +/- 1/2"

CUSTOMER INFORMATION

ASSY-EJECTOR,316,1.00X0.25,SS TUBE

DRAWING NUMBER	REVISION
1319244	B

REF.: | DOC. OWNER:

PROJECT NO.	PART/MATERIAL NO.	SCALE	SIZE	SHEET
	3178110, 3178111	1:8	B	1 OF 1

LAST SAVED: Tuesday, September 1, 2020 12:01:59 PM

FILE LOCATION: C:\SWPDM\SYSTEM\SHOP\INFO\1310000\

VACUUM PRODUCTS

COAX® — THE NEXT DIMENSION IN VACUUM TECHNOLOGY

Tag No:
20-E-801-1/2/3/4/5/6/7

P6010

A COMPACT MODULAR VACUUM PUMP WITH INTEGRATED FUNCTIONALITY

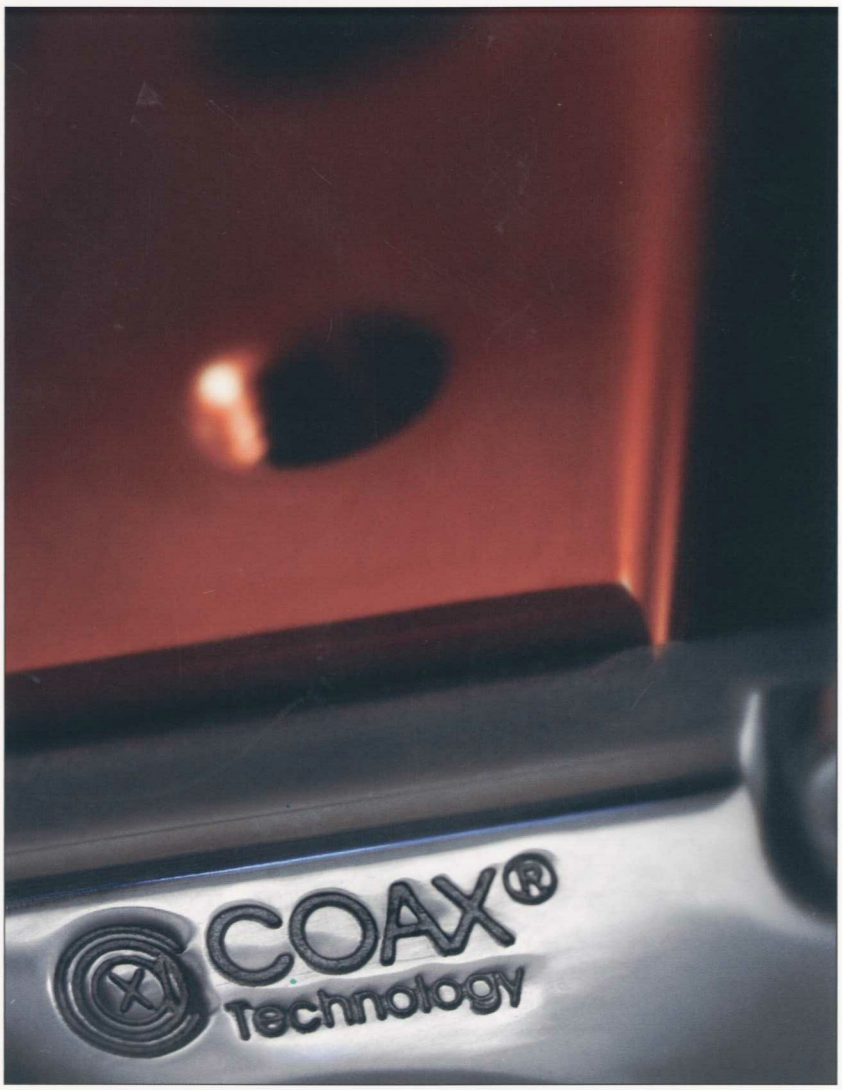



Patented COAX® technology

Energy efficient

Durable

Modular design

Quiet operation

PIAB
Innovators in Vacuum Technology

P6010 —

A smart investment...

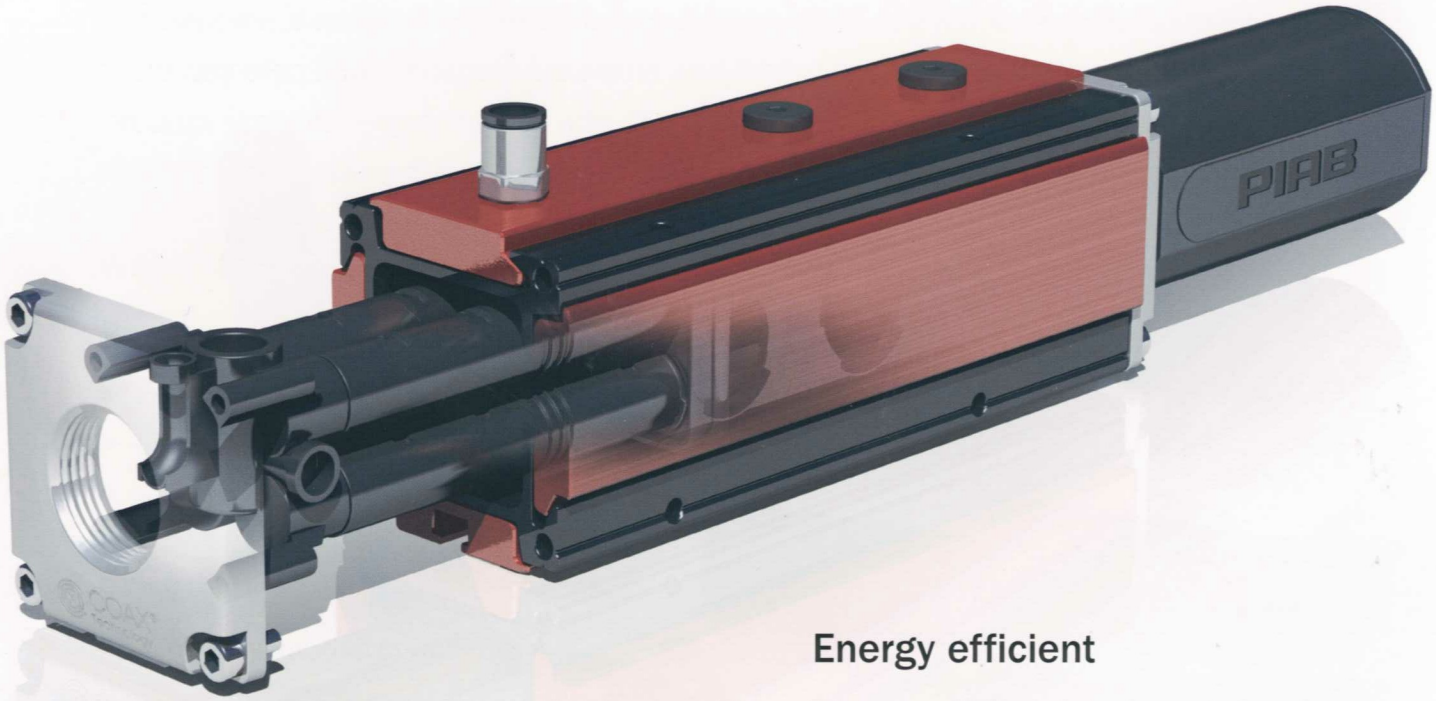

Durable

PIAB sets the standard when it comes to reliable operation. The P6010 pump range is designed for the most demanding environments. The pump housing is so strong it can be used as a support. Because there are no moving parts, there is no heat generation and virtually no maintenance. Downtime and work stoppage can be drastically reduced. Exceptional performance in a durable package – the P6010 is built to last.

Energy efficient

Powered by COAX® technology, the P6010 can reduce energy costs up to 25% or more compared to other methods of generating vacuum. Powerful suction at low feed pressures is characteristic for this advanced design. Lower supply pressure results in a measurable decrease in energy consumption. In addition, the P6010 with COAX® maintains performance levels during periods of fluctuating supply pressure when other pumps lose suction capacity and may even drop parts. The P6010's compact size is deceiving. COAX® technology puts powerful suction in a small package and the pump can be easily mounted close to the point of suction. The result... a smaller pump requirement with lower energy needs. For the ultimate in operating efficiency, integrated control options are also available. Refer to pages 6–7 for details.

COAX® — The next dimension in vacuum technology

It's all about simplicity--- You want to save time and money. Your vacuum system should be easy to design, install, start up and maintain. It should offer operational reliability and show flexibility to changes in working conditions. This is why the COAX® technology was developed.

When compressed air (1) flows through the pump nozzles (2), air from outside the pump will be entrained by the jet of air at the nozzle outlet. Suction will be generated at the openings to the various stages (3). Exhaust then exits the pump.

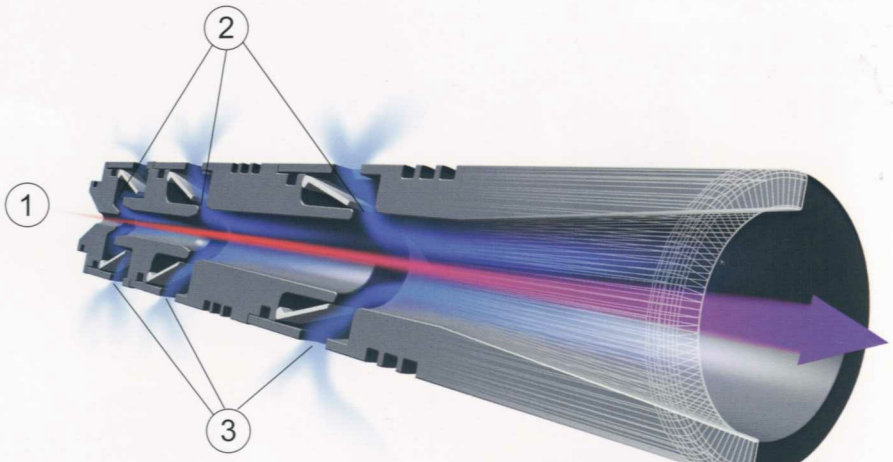

Unique multistage ejector

COAX®, a patented technology, is a new and improved design on PIAB's innovative multistage concept for creating vacuum with compressed air. COAX® integrates the internal components of a multistage vacuum pump into a vacuum cartridge. The result is a smaller, more efficient, more reliable and highly flexible technology that allows you to design a modular system.

Energy is put to maximum use with the COAX® technology. The vacuum pump/cartridge consumes less air than conventional ejectors. COAX® vacuum cartridges are up to twice as fast and provide 3 times more flow than a typical conventional ejector with the same air consumption. COAX® is also designed for low and fluctuating feed pressures (25-87 psi) with sustained vacuum performance for maximum reliability.

Choose the right COAX® *cartridge* for your application

PIAB has developed two main types of COAX® *cartridges*, Pi and Si, for different applications.



Pi

Pi cartridges have been developed to achieve a high vacuum level at low feed pressures. They are ideal when pressures in compressed air lines fluctuate. Pi cartridges are recommended in situations such as handling sheet metal or glass or other non-porous products, where you need good vacuum flow and a high-level vacuum. Pi can deliver high vacuum levels down to 27-inHg.

Si

Si cartridges are designed to provide extra vacuum flow. They are highly recommended for handling porous materials such as corrugated board and for high-volume evacuation in, for example, a fast-cycling system where it is necessary to compensate for leakage in order to maintain the vacuum level. Si cartridges can deliver moderate vacuum levels down to 22-inHg.

Vacuum efficiency

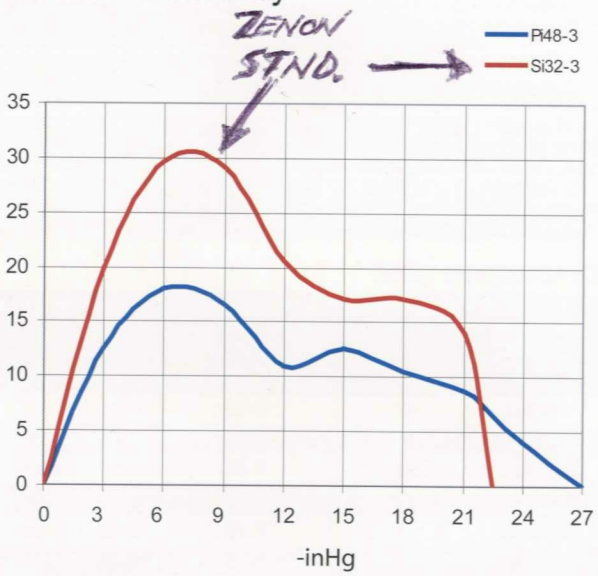

Vacuum Efficiency =
Vacuum flow/air consumption x vacuum level

P6010 SI32-3



- COAX® patented technology
- Substantially lower air-consumption as compared to conventional ejectors
- Modular design
- High flow - suitable for handling of porous objects and in case of leakage
- Short evacuation time
- "Classic" mounting style option available
- Supplied with a vacuum gauge and optional vacuum filter

TECHNICAL DATA

Description	Unit	Value
Feed pressure, max	psi	101.5
Noise level	dBA	65-70 (Classic style = 50-65)
Temperature range	°F	14-176
Weight	lb	3.74-3.96
Material		Al, PA, NBR, SS, TPE

VACUUM FLOW

P6010 Cartridge Type	Feed pressure	Air consumption	Vacuum flow (scfm) at different vacuum levels										Max vacuum
	psi	scfm	0	3	6	9	12	15	18	21	24	27	-inHg
Si32-3x1	58	2.65	10.6	6.14	4.03	2.54	1.70	0.85	0.21	—	—	—	18.0
Si32-3x1	72.5	3.18	12.1	6.99	4.66	2.97	1.80	1.27	0.74	0.38	—	—	21.0
Si32-3x1	87	3.71	12.7	7.42	5.51	3.60	1.91	1.27	1.06	0.74	—	—	22.2
Si32-3x2	58	5.30	21.2	12.3	8.05	5.09	3.39	1.70	0.42	—	—	—	18.0
Si32-3x2	72.5	6.36	24.2	14.0	9.32	5.93	3.60	2.54	1.48	0.76	—	—	21.0
Si32-3x2	87	7.42	25.4	14.8	11.0	7.20	3.81	2.54	2.12	1.48	—	—	22.2
Si32-3x3*	58	7.95	31.8	18.4	12.1	7.63	5.09	2.54	0.64	—	—	—	18.0
Si32-3x3*	72.5	9.54	36.2	21.0	14.0	8.90	5.51	3.81	2.33	1.14	—	—	21.0
Si32-3x3*	87	11.1	38.1	22.2	16.5	10.8	5.72	3.81	3.18	2.33	—	—	22.2
Si32-3x4*	58	10.6	42.4	24.6	16.1	10.2	6.78	3.39	0.85	—	—	—	18.0
Si32-3x4*	72.5	12.7	48.3	28.0	18.6	11.9	7.20	5.09	2.97	1.53	—	—	21.0
Si32-3x4*	87	14.8	50.9	29.7	22.0	14.4	7.63	5.09	4.24	2.97	—	—	22.2

Specifications subject to change without notice.

EVACUATION TIME

P6010 Cartridge Type	Feed pressure	Air consumption	Evacuation time (s/cf) to reach different vacuum levels (-inHg)									Max vacuum
	psi	scfm	3	6	9	12	15	18	21	24	27	-inHg
Si32-3x1	58	2.65	0.85	1.98	3.97	6.80	11.9	28.3	—	—	—	18.0
Si32-3x1	72.5	3.18	0.57	1.70	3.12	5.95	9.90	17.0	28.3	—	—	21.0
Si32-3x1	87	3.71	0.57	1.42	2.83	5.10	9.35	15.0	22.7	—	—	22.2
Si32-3x2	58	5.30	0.42	0.99	1.98	3.40	5.95	14.2	—	—	—	18.0
Si32-3x2	72.5	6.36	0.28	0.85	1.56	3.12	5.10	8.50	14.2	—	—	21.0
Si32-3x2	87	7.42	0.28	0.71	1.42	2.55	4.82	7.65	11.3	—	—	22.2
Si32-3x3*	58	7.95	0.28	0.65	1.33	2.27	3.97	9.35	—	—	—	18.0
Si32-3x3*	72.5	9.54	0.20	0.57	1.05	1.98	3.40	5.67	9.35	—	—	21.0
Si32-3x3*	87	11.1	0.20	0.48	0.93	1.70	3.12	5.10	7.65	—	—	22.2
Si32-3x4*	58	10.6	0.23	0.51	0.99	1.70	3.12	7.08	—	—	—	18.0
Si32-3x4*	72.5	12.7	0.14	0.42	0.79	1.50	2.49	4.25	7.08	—	—	21.0
Si32-3x4*	87	14.8	0.14	0.37	0.71	1.27	2.35	3.68	5.67	—	—	22.2

** Vacuum performance is reduced by 20-30% when using the 3/4" NPSF "Classic" style cover plate (code LK) between 0-9 -inHg.*

ORDERING INFORMATION

	1. Vacuum Cartridge Module	P6010 Code
a	Si32-3 x1	AB
b	Si32-3 x1 with non-return valve	AF
a	Si32-3 x2	AC
b	Si32-3 x2 with non-return valve	AG
a	Si32-3 x3	AD
b	Si32-3 x3 with non-return valve	AH
a	Si32-3 x4	AE
b	Si32-3 x4 with non-return valve	AI

2. Mounting and cover plate	P6010 Code
Mounting T-slot	01

3. Function and cover plate	P6010 Code
Cover plates Standard style NPSF threads (No function)	LJ
Cover plates Classic style NPSF threads (No function)	LK

4. Connections for vacuum and exhaust	P6010 Code
2 x 1" NPSF with silencer 1" Standard style	56
2 x 3/4" NPSF with silencer 3/4" Classic style	58

5. Vacuum filter	P6010 Code
None	XX
Vacuum filter, 1" NPT (Standard size)	FA
Vacuum filter, 3/4" NPT (Classic size)	FB

Example	Ordering number
P6010, Si32-3 x1, mounting T-slot, cover plates (Standard-no function), 2 x 1" NPSF with silencer 1" & vacuum filter 1"	P6010.AB.01.LJ.56.FA
P6010, Si32-3 x1, mounting T-slot, cover plates (Classic-no function), 2 x 3/4" NPSF with silencer 3/4" & vacuum filter 3/4"	P6010.AB.01.LK.58.FB

Specifications subject to change without notice.

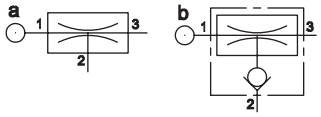

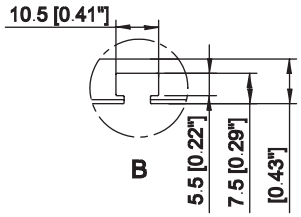

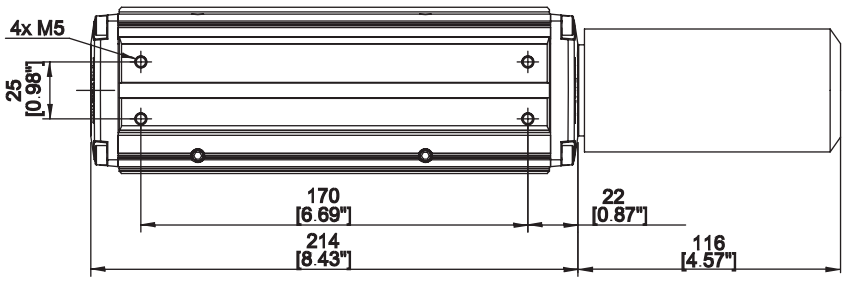

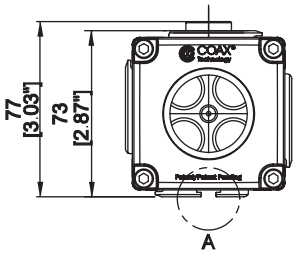



DETAIL A

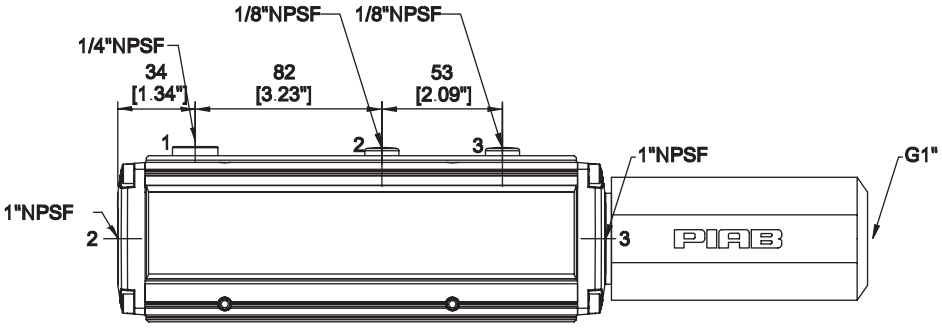



DETAIL B

Standard style

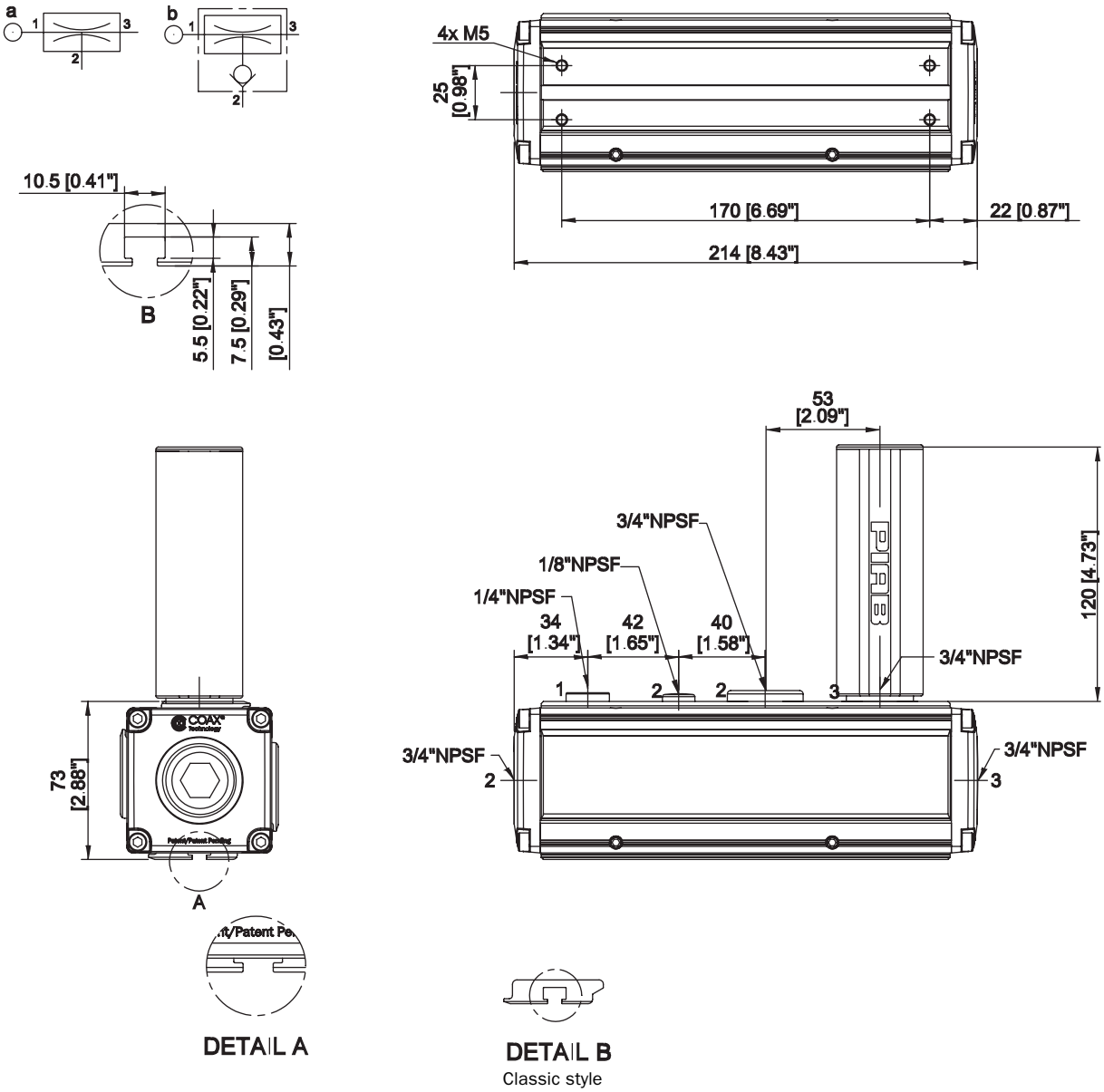

ORDERING INFORMATION, ACCESSORIES

Description	PartNo
Silencer G3/4"	32.16.002
Silencer G1"	01.12.499
Manometer 250 kPa	01.12.533
Manometer 1 Mpa	01.12.532
Vacuum gauge 30 -inHg/100 -kPa	31.01.613
Vacuum filter, 3/4" NPT	PPSF.75-X35
Vacuum filter 1" NPT	PPSF1.0-X50
Seal kit P6010, NBR seals	01.12.495
Seal for vacuum & exhaust end connections, P6010, NBR seals	01.12.497

Specifications subject to change without notice.

VACUUM GAUGE AND MANOMETERS

BAAN NUMBERS
1030394



- Analog indicator, spring joint – lever system
- The instruments include nut for installation on a panel

TECHNICAL DATA

Description	Unit	Value
Accuracy, of full scale	%	2.5
Material		CuZn, ABS, PMMA

TECHNICAL DATA, SPECIFIC

		31.01.613		
Description	Unit	31.01.602	31.01.603	31.01.626
Weight	oz	3.17	1.94	1.76
Signal range		0–30 -inHg	0–145 psi	0–36.25 psi
Medium		Vacuum	Postive pressure	

ORDERING INFORMATION

	Description		Part No.
B	Vacuum gauge 30 -inHg/100 -kPa	(Without panel mount nut)	31.01.602 (31.01.613)
A	Manometer 150 psi/1 MPa		31.01.603
A	Manometer 36.25 psi/250 -kPa		31.01.626

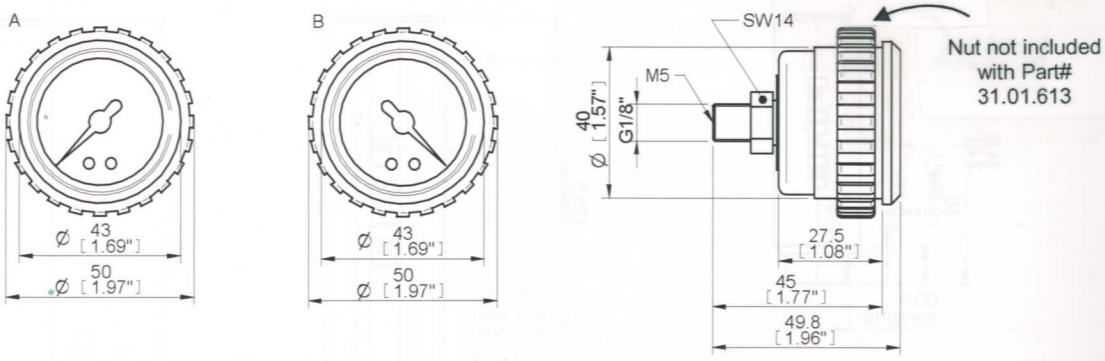

Specifications subject to change without notice.

TAGS:
90-AC-001-A/B
90-PSV-001-A/B
90-HV-001-A/B
90-PSL-001-A/B
90-PI-001-A/B
90-F-001-A/B
90-FV-001-A/B
90-TK-001-A/B



CR Series

Cast Iron Piston Air Compressors

The CR Cast Iron Piston Compressor Series

Newly designed, lasting reliability

More dependable than ever with tailored options for all contractor, professional and industrial applications, Atlas Copco is pleased to introduce the newly designed CR cast iron piston compressor series. The CR range delivers a champion combination of outstanding reliability matched with robust performance, even in the most demanding conditions for a dependable piston you can count on.

Capitalizing on heavy-duty cast iron construction and a combination of computer-aided design with controlled machining processes, the new CR single stage and two-stage compressors deliver up to 175 psig with 24/7 reliability. We back this up with our bumper to bumper warranty packages, and have options for a 5 year extended warranty, depending on the model chosen.



A complete and tailored range of premium compressors at affordable prices

Count on Atlas Copco's cast iron piston technology to drive your production reliably and support your application demand. We can meet your exact requirements with a broad piston compressor line, whether you work in a small workshop or on a large onsite project.

A range of series with available options:



CR Series

A 60 second guide to the piston that sets the bar high

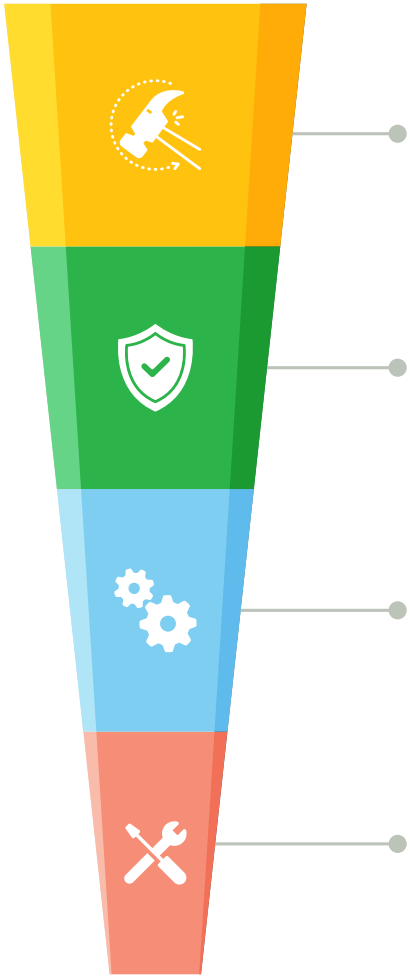

Heavy-Duty Cast Iron Construction

Ensures durability and reliability for the most demanding applications

Reliability

Engineered using the most state-of-the-art manufacturing techniques for a product of design excellence. The compressed air you need to keep your operations running efficiently with maximum uptime.

Tailored

Custom your piston to your needs. Options available include:

- Auto drain
- After cooler
- Low oil level switch
- TEFC motor
- NEMA4 control panel
- Pressure lubricated pump
- Simplex and duplex configurations
- And more...

Easy Maintenance

Every component is easily accessible allowing minimum downtime and requires only limited maintenance.



TEFC Motor



NEMA4 control panel

The CR - Contractor Series

A premium compressor at the lowest capital cost for point of use applications.

2-5.5HP/135 psi

The Contractor Series provides affordable compressed air in a small, lightweight package. The low-profile cast iron design, semi-pneumatic wheel, heavy gauge wire belt guard and rugged pump design provide the ideal solution for small, portable applications.

Features and Benefits:

- Standard 2-year Bumper to Bumper Warranty
  – No start-up kit required
- Single stage units
  – Electric or gas powered
- Fully enclosed belt guard and ASME safety valves
- Pilot valve control on gas drive units to reduce engine peed on low demand





Technical Specifications

*Voltage available from 115-230

Model	Horsepower	Tank	ACFM		LxWxH	Weight
		Gallons	@ 100psi	@ 175psi	inches	lbs.
CR C2-SS-24GV	2	24	4.9	4.1	20x21x46	150
CR C2-SS-2x4G	2	2x4	4.9	4.1	43x18x23	145
CR C2-SS-23GH	2	23	4.9	4.1	22x33x33	150
CR C3-SS-2x4G	3	2x4	9.1	7.6	43x18x25	174
CR C3-SS-60GV	3	60	9.1	7.6	28x23x67	260
CR C5-SS-60GV	5	60	11.4	9.5	28x23x67	271
CR C5.5-SS-2x4G-Honda Gas	6	2x4	11.4	9.5	43x18x26	179

The - CR Professional Series

A reliable electric compressor for rugged, stationary use.

5-20HP/135-175 psi

The Professional Series provides high pressure at the lowest cost in a small, lightweight package. The balanced counter weighed crankshaft and cast iron design provide smooth, easy operation with a range of unit options supplying an ideal solution for demanding applications.

Features and Benefits:

- 1 year bumper to bumper with 5 year extended warranty on the pump*
  – *With purchase of minor and major maintenance kits
- Duplex, Simplex or Base Mounted

- Two-stage
  - Best for high demands needing up to 175 psi
- Oversized oil reservoir for low oil temperatures, industrial class bearings and one-piece aluminum head for heat dissipation providing longevity
- Low Maintenance with 2-piece connecting rods and oil pressure gauge
- High efficiency intercooler with stainless steel valve design for highest volumetric efficiency



Technical Specifications

Standard Models

*Voltages available from 200-575 volt

Description	Horsepower	Tank	ACFM		LxWxH	Weight
		Gallons	@ 100psi	@ 175psi	inches	lbs.
CR5-OTS-80GV - Vertical	5	80V	15.1	14.5	32x26x75	554
CR5-TS-80GV - Vertical	5	80V	17.9	17.2	32x26x75	554
CR7.5-TS-80GV - Vertical	7.5	80V	23.8	22.6	32x26x75	599
CR10-TS-120GV - Vertical	10	120V	35.9	35	40x30x77	845
CR10-TS-120GH - Horizontal	10	120H	35.9	35	72x28x54	845
CR-TS-30GH-13HG - 13 HP Honda Gas Unit	13	30	23.5	22.6**	41x23x42	465
CR-TS-30GH-14KG - 14 HP Kohler Gas Unit	14	30	23.5	22.6**	42x24x41	465
CR15-TS-120GH - Horizontal	15	120H	54.4	51	70x28x54	870

Standard and Packaged TEFC Motor Upgrade/NEMA4 Control Panel Models

Description	Horsepower	Tank	ACFM		LxWxH	Weight
		Gallons	@ 100psi	@ 175psi	inches	lbs.
CR5-TS-80GV-3PH-PS,TN4 - Vertical	5	80V	17.9	17.2	32x26x75	554
CR7.5-TS-80GV-3PH-PS,TN4 - Vertical	7.5	80V	23.8	22.6	32x26x75	599
CR10-TS-120GV-3PH-PS,TN4 - Vertical	10	120V	35.9	35	40x30x77	845
CR10-TS-120GV-3PH-PS,TN4 - Horizontal	10	120H	35.9	35	72x28x54	845
CR15-TS-120GV-3PH-PS,TN4 - Horizontal	15	120H	54.4	51	70x28x54	870

Packaged Duplex Models

Description	Horsepower	Tank	ACFM		LxWxH	Weight
		Gallons	@ 100psi	@ 175psi	inches	lbs.
CR5-TS-120GH-3PH-PPS-D - Horizontal	5*2 = 10 HP	120H	35.9	35	77x30x52	1000
CR7.5-TS-120GH-3PH-PPS-D - Horizontal	7.5*2 = 15 HP	120H	54.4	51	77x30x52	1300
CR10-TS-200GH-3PH-PPS-D - Horizontal	10*2 = 20 HP	200H	71.8	70	78x46x63	2200

** - Single phase units stop at 7.5HP

The CR - Industrial Series

The most reliable piston air compressor customizable to you.

5-20HP/135-175 psi

The Industrial Series provides high pressure at low cost in a newly designed, cast iron package. The balanced counter weighed crankshaft provide a smooth, easy operation with a range of unit options supplying an ideal solution for the most robust applications.

Features and Benefits:

- 1 year bumper to bumper with 5 year extended warranty on the pump*
  - *With purchase of minor and major maintenance kits
- Duplex, simplex or base mounted
- Two-stage
  - Best for high demands needing up to 175 psi
- Oversized oil reservoir for low oil temperatures, industrial class bearings and one-piece aluminum head for heat dissipation providing longevity
- Low maintenance with 2-piece connecting rods and oil pressure gauge
- High efficiency intercooler with stainless steel valve design for highest volumetric efficiency





Technical Specifications

CR Industrial Series

The CR Series piston compressor is a cast-iron, splash lubricated, 2 stage, 175psi product. All models are equipped with magnetic starters as standard. The industrial series comes equipped with an electric drain, belt guard aftercooler, and low oil level switch on all models. The 10 and 15HP models also come equipped with head unloaders.

CR Industrial Series - Standard and TEFC motor and NEMA4 controller upgrade

Model	Horsepower	Tank	ACFM		LxWxH	Weight
		Gallons	@ 100psi	@ 175psi	inches	lbs.
CR5-TS-80GV-IS, Standard or TN4	5	80V	17.9	17.2	32x26x75	554
CR7.5-TS-80GV-IS, Standard or TN4	7.5	80V	23.8	22.6	32x26x75	599
CR10-TS-120GV-IS, Standard or TN4	10	120V	35.9	35	40x30x77	845
CR10-TS-120GH-IS, Standard or TN4	10	120H	35.9	35	72x28x54	845
CR15-TS-120GH-IS, Standard or TN4	15	120H	54.4	51	40x30x77	845

CR Industrial Series - Duplex TEFC motor and NEMA4 controller upgrade

Duplex units offer twin motors and twin pumps for additional output and redundancy.

Model	Horsepower	Tank	ACFM		LxWxH	Weight
		Gallons	@ 100psi	@ 175psi	inches	lbs.
CR5-TS-120GH-IS-D, Standard or TN4	5	120H	35.9	35	77x30x52	1000
CR7.5-TS-120GH-IS-D, Standard or TN4	7.5	120H	54.4	51	77x30x52	1300
CR10-TS-200GH-IS-D, Standard or TN4	10	200H	71.8	70	78x46x63	2200

** - Single phase units stop at 7.5HP

Buyers Guide

Looking to customize your unit?

Series	Magnetic Starter	Low oil level switch	Electronic Drain	Belt guard Aftercooler	TEFC Motor	NEMA 4 Control Panel	Pressure Lubricated Pump	Head Unloaders
Standard	✓							
Professional Package	✓		✓	✓	i	i	i	
Industrial	✓	✓	✓	✓	i	i	i	✓ *10 and 15HP

Looking to complete your package?



Optional add-ons:

In-line Filters

- Protect your tools and end-products, investments and processes
- Meet requirements for cleaner, dryer air
- Reduce your service and maintenance costs

General purpose, high efficiency and odor removal line filters to meet high quality air needs.

Dryers: Avoid condensation and chance of corrosion by removing water from your compressed air.

Model	SCFM
FXHT-1	25
FXHT-2	50
FXHT-3	75
FXHT-4	100
FXHT-5	125



AIRnet Aluminum or Stainless Steel Piping: Easy to install, modular piping system for air and inert gases.



1119 0001 02– EN © Atlas Copco AB, Stockholm, Sweden. Production: Atlas Copco Brand Studio. Print: BrandFactory, November 2019

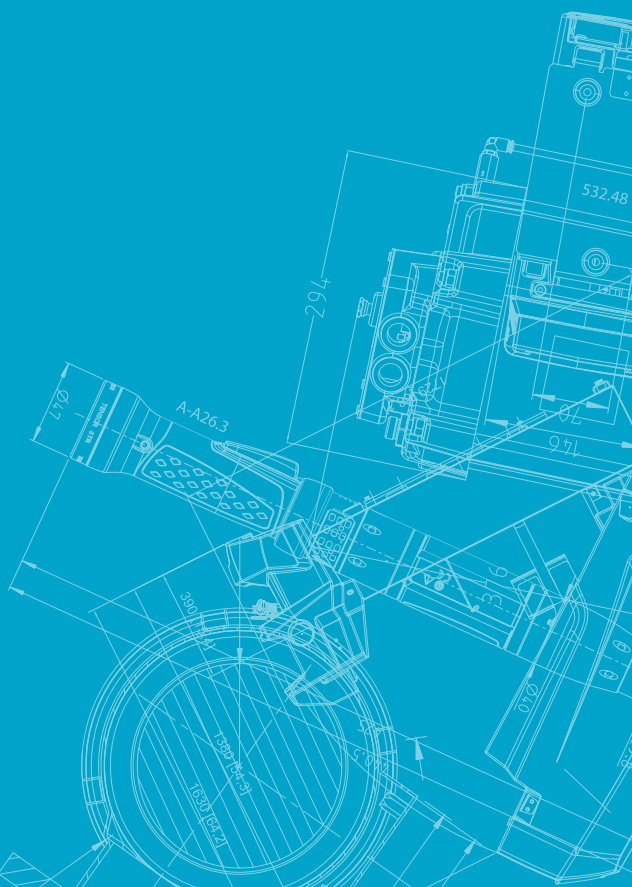

Atlas Copco

Atlas Copco Compressors

300 Technology Center Drive Ste 550
Rock Hill, South Carolina 29730
atlascopco.com

Atlas Copco

Industrial cast iron piston compressors



CR Range

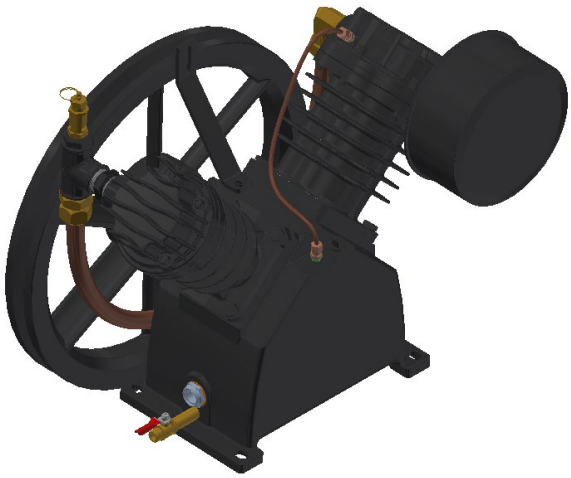

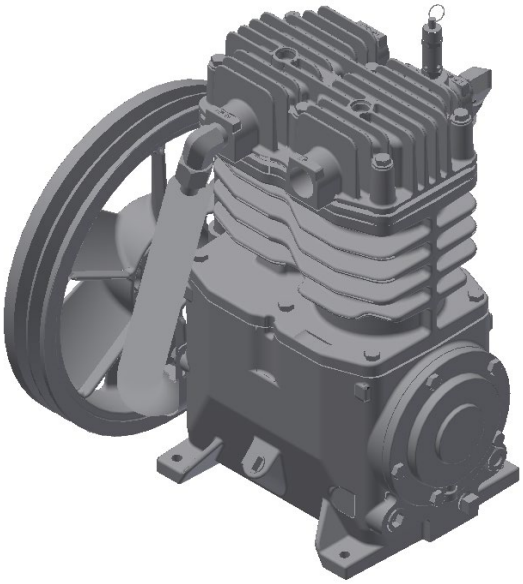

Instruction book

Atlas Copco

Industrial cast iron piston compressors

CR Range

Instruction book

Original instructions

Copyright Notice

Any unauthorized use or copying of the contents or any part thereof is prohibited.

This applies in particular to trademarks, model denominations, part numbers and drawings.

2019 - 02

No. 2022 2096 26

www.atlascopco.com

Table of contents

Table of contents 2

1 Safety precautions 4

1.1 Safety icons 4

1.2 Safety precautions, general 4

1.3 Safety precautions during installation 4

1.4 Safety precautions during operation 6

1.5 Safety precautions during maintenance or repair 7

2 General description 9

2.1 General description 9

2.2 Hour meter option 12

2.3 Control piping 14

2.4 Regulating system 19

3 Installation 20

3.1 Installation instruction 20

3.2 Electrical connections 22

3.3 Fuses and wire sizes 34

4 Operating instructions 35

4.1 Initial start-up 35

4.2 Starting 35

4.3 Stopping 37

4.4 Taking out of operation 37

4.5 Storage after installation 37

5 Maintenance 38

5.1 Gas engine maintenance 38

5.2 Preventive maintenance schedule 38

5.3 Lubrication of compressors....39
5.4 Service kits....39
5.5 Disposal of used material....39
6 Servicing and adjustment procedures....40
6.1 Air filter....40
6.2 Adjustment of MDR4 pressure switch....40
6.3 Adjustment of MDR3 pressure switch....41
6.4 Adjustment of pilot valve....42
6.5 Pressure relief valve....43
7 Problem solving....44
8 Technical data....47
8.1 Reference conditions....47
8.2 Limitations....47
8.3 Compressor data....47
9 Instructions for use....48

1 Safety precautions

1.1 Safety icons

Explanation

	Danger for life
	Warning
	Important note

1.2 Safety precautions, general

General precautions

1. The operator must employ safe working practices and observe all related work safety requirements and regulations.
2. If any of the following statements does not comply with the applicable legislation, the stricter of the two shall apply.
3. Installation, operation, maintenance and repair work must only be performed by authorized, trained, specialized personnel.
4. The compressor is not considered capable of producing air of breathing quality. For air of breathing quality, the compressed air must be adequately purified according to the applicable legislation and standards.
5. Before any maintenance, repair work, adjustment or any other non-routine checks, stop the compressor, press the emergency stop button, switch off the voltage and depressurize the compressor. In addition, the power isolating switch must be opened and locked.
6. Never play with compressed air. Do not apply the air to your skin or direct an air stream at people. Never use the air to clean dirt from your clothes. When using the air to clean equipment, do so with extreme caution and wear eye protection.
7. The owner is responsible for maintaining the unit in safe operating condition. Parts and accessories shall be replaced if unsuitable for safe operation.
8. It is not allowed to walk or stand on the roof of the compressor canopy.

1.3 Safety precautions during installation

	All responsibility for any damage or injury resulting from neglecting these precautions, or non-observance of the normal caution and care required for installation, operation, maintenance and repair, even if not expressly stated, will be disclaimed by the manufacturer.

Precautions during installation

1. The machine must only be lifted using suitable equipment in accordance with the applicable safety regulations. Loose or pivoting parts must be securely fastened before lifting. It is strictly forbidden to dwell or stay in the risk zone under a lifted load. Lifting acceleration and deceleration must be kept within safe limits. Wear a safety helmet when working in the area of overhead or lifting equipment.
2. Place the machine where the ambient air is as cool and clean as possible. If necessary, install a suction duct. Never obstruct the air inlet. Care must be taken to minimize the entry of moisture at the inlet air.
3. Any blanking flanges, plugs, caps and desiccant bags must be removed before connecting the pipes.
4. Air hoses must be of correct size and suitable for the working pressure. Never use frayed, damaged or worn hoses. Distribution pipes and connections must be of the correct size and suitable for the working pressure.
5. The aspirated air must be free of flammable fumes, vapors and particles, e.g. paint solvents, that can lead to internal fire or explosion.
6. Arrange the air intake so that loose clothing cannot be sucked in.
7. Ensure that the discharge pipe from the compressor to the aftercooler or air net is free to expand under heat and that it is not in contact with or close to flammable materials.
8. No external force may be exerted on the air outlet valve; the connected pipe must be free of strain.
9. If remote control is installed, the machine must bear a clear sign stating: DANGER: This machine is remotely controlled and may start without warning. The operator has to make sure that the machine is stopped and that the isolating switch is open and locked before any maintenance or repair. As a further safeguard, persons switching on remotely controlled machines shall take adequate precautions to ensure that there is no one checking or working on the machine. To this end, a suitable notice shall be affixed to the start equipment.
10. The machines must be installed in such a way that an adequate flow of cooling air is available and that the air from the exhaust does not recirculate to the compressor air inlet or cooling air inlet.
11. The electrical connections must correspond to the applicable codes. The machines must be earthed and protected against short circuits by fuses in all phases. A lockable power isolating switch must be installed near the compressor.
12. On machines with automatic start-stop system or if the automatic restart function after voltage failure is activated, a sign stating “This machine may start without warning” must be affixed near the instrument panel.
13. In multiple compressor systems, manual valves must be installed to isolate each compressor. Non-return valves (check valves) must not be relied upon for isolating pressure systems.
14. Never remove or tamper with the safety devices, guards or insulation fitted on the machine. Every pressure vessel or auxiliary installed outside the machine to contain air above atmospheric pressure must be protected by a pressure-relieving device or devices as required.
15. Pipework or other parts with a temperature in excess of 176˚F and which may be accidentally touched by personnel in normal operation must be guarded or insulated. Other high-temperature pipework must be clearly marked.
16. If the ground is not level or can be subject to variable inclinations, consult the manufacturer.

	Also consult following safety precautions: Safety precautions during operation and Safety precautions during maintenance. These precautions apply to machinery processing or consuming air or inert gas. Processing of any other gas requires additional safety precautions typical to the application which are not included herein. Some precautions are general and cover several machine types and equipment; hence some statements may not apply to your machine.

1.4 Safety precautions during operation

	All responsibility for any damage or injury resulting from neglecting these precautions, or non-observance of the normal precautions and care required for installation, operation, maintenance and repair, even if not expressly stated, will be disclaimed by the manufacturer.

Precautions during operation

1. Use only the correct type and size of hose end fittings and connections. When blowing through a hose or air line, ensure that the open end is held securely. A free end will whip and may cause injury. Make sure that a hose is fully depressurized before disconnecting it.
2. Persons switching on remotely controlled machines shall take adequate precautions to ensure that there is no one checking or working on the machine. To this end, a suitable notice shall be affixed to the remote start equipment.
3. Never operate the machine when there is a possibility of taking in flammable or toxic fumes, vapors or particles.
4. Never operate the machine below or in excess of its limit ratings.
5. People staying in environments or rooms where the sound pressure level reaches or exceeds 90 dB(A) shall wear ear protectors.
6. Periodically check that:
   - All guards are in place and securely fastened
   - All hoses and/or pipes inside the machine are in good condition, secure and not rubbing
   - There are no leaks
   - All fasteners are tight
   - All electrical leads are secure and in good order
   - Pressure relief valves and other pressure-relief devices are not obstructed by dirt or paint
   - Air outlet valve and air net, i.e. pipes, couplings, manifolds, valves, hoses etc. are in good repair, free of wear or abuse
7. If warm cooling air from compressors is used in air heating systems, e.g. to warm up a workroom, take precautions against air pollution and possible contamination of the breathing air.
8. If available, do not remove any of, or tamper with, the sound-damping material.
9. Never remove or tamper with the safety devices, guards or insulations fitted on the machine. Every pressure vessel or auxiliary installed outside the machine to contain air above atmospheric pressure shall be protected by a pressure-relieving device or devices as required.

	Also consult following safety precautions: Safety precautions during installation and Safety precautions during maintenance. These precautions apply to machinery processing or consuming air or inert gas. Processing of any other gas requires additional safety precautions typical to the application which are not included herein. Some precautions are general and cover several machine types and equipment; hence some statements may not apply to your machine.

1.5 Safety precautions during maintenance or repair

	All responsibility for any damage or injury resulting from neglecting these precautions, or non-observance of the normal precautions and care required for installation, operation, maintenance and repair, even if not expressly stated, will be disclaimed by the manufacturer.

Precautions during maintenance or repair

1. Always wear safety glasses.
2. Use only the correct tools for maintenance and repair work.
3. Use only genuine spare parts.
4. All maintenance work shall only be undertaken when the machine has cooled down.
5. A warning sign stating “work in progress; do not start” shall be attached to the starting equipment.
6. Persons switching on remotely controlled machines shall take adequate precautions to ensure that there is no one checking or working on the machine. To this end, a suitable notice shall be affixed to the remote start equipment.
7. Close the compressor air outlet valve before connecting or disconnecting a pipe.
8. Before removing any pressurized component, effectively isolate the machine from all sources of pressure and relieve the entire system of pressure.
9. Never use flammable solvents or carbon tetrachloride for cleaning parts. Take safety precautions against toxic vapors of cleaning liquids.
10. Scrupulously observe cleanliness during maintenance and repair. Keep dirt away by covering the parts and exposed openings with a clean cloth, paper or tape.
11. Never weld or perform any operation involving heat near the oil system. Oil tanks must be completely purged, e.g. by steam-cleaning, before carrying out such operations. Never weld on, or in any way modify, pressure vessels.
12. Whenever there is an indication or any suspicion that an internal part of a machine is overheated, the machine shall be stopped but no inspection covers shall be opened before sufficient cooling time has elapsed; this to avoid the risk of spontaneous ignition of the oil vapor when air is admitted.
13. Never use a light source with open flame for inspecting the interior of a machine, pressure vessel etc.
14. Make sure that no tools, loose parts or rags are left in or on the machine.
15. All regulating and safety devices shall be maintained with due care to ensure that they function properly. They may not be put out of action.
16. Protect the motor, air filter, electrical and regulating components etc. to prevent moisture from entering them, e.g. when steam-cleaning.
17. Make sure that all sound-damping material and vibration dampers, e.g. damping material on the bodywork and in the air inlet and outlet systems of the compressor, are in good condition. If damaged, replace it by genuine material from the manufacturer to prevent the sound pressure level from increasing.
18. Never use caustic solvents which can damage materials of the air net, e.g. polycarbonate bowls.
19. **The following safety precautions are stressed when handling refrigerant**:
    - Never inhale refrigerant vapors. Check that the working area is adequately ventilated; if required, use breathing protection.
    - Always wear special gloves. In case of refrigerant contact with the skin, rinse the skin with water. If liquid refrigerant contacts the skin through clothing, never tear off or remove the latter; flush abundantly with fresh water over the clothing until all refrigerant is flushed away; then seek medical first aid.
20. Protect hands to avoid injury from hot machine parts, e.g. during draining of oil.

	Also consult the following safety precautions: Safety precautions during installation and Safety precautions during operation. These precautions apply to machinery processing or consuming air or inert gas. Processing of any other gas requires additional safety precautions typical to the application which are not included herein. Some precautions are general and cover several machine types and equipment; hence some statements may not apply to your machine.

2 General description

2.1 General description

Introduction

CR Range Compressors are air-cooled, two cylinder, single-stage and double-stage, lubricated piston compressors, built for effective working pressures up to 145-175 psi.

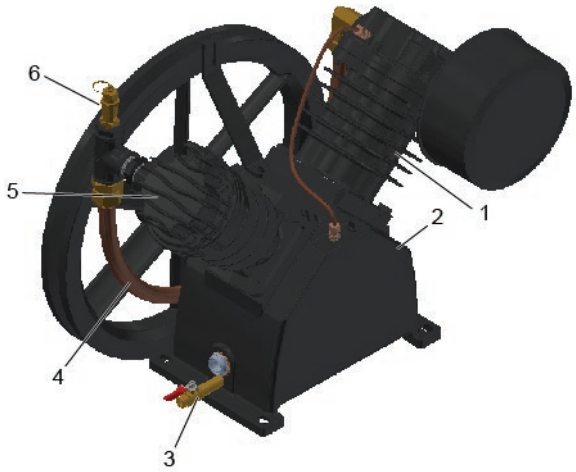

Compressor block

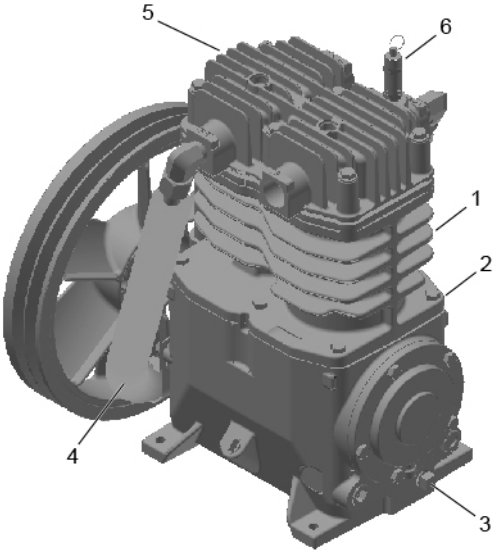

Compressor block

Reference	Description
1	Cylinder
2	Crankcase
3	Oil drain
4	Intercooler
5	Cylinder head
6	Pressure relief valve

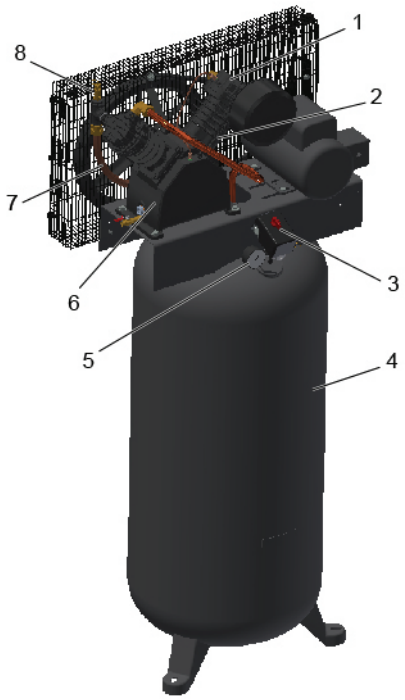

Tank-mounted, vertical receiver

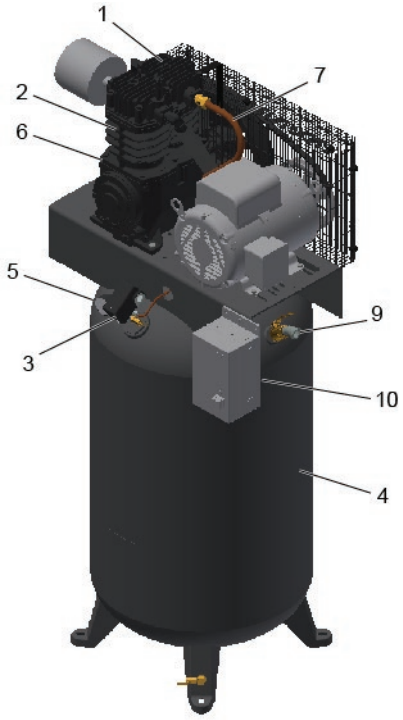

Tank-mounted, vertical receiver

Reference	Description
1	Compressor
2	Filter
3	Air pressure switch
4	Air receiver
5	Air pressure gauge
6	Crankcase
7	Intercooler
8	Pressure relief valve
9	Air outlet valve
10	Control panel

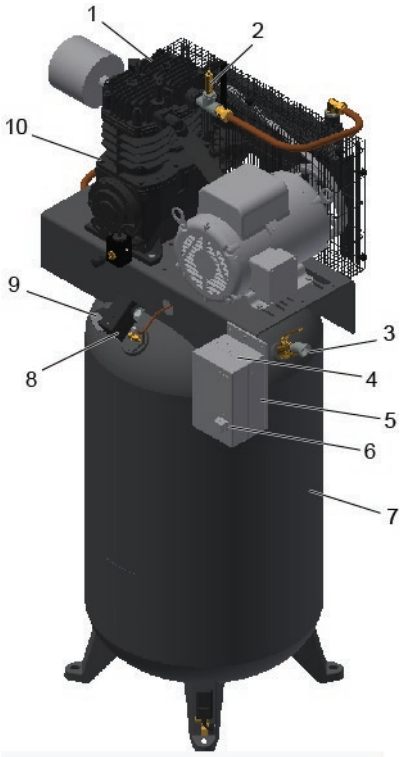

Tank-mounted, vertical receiver

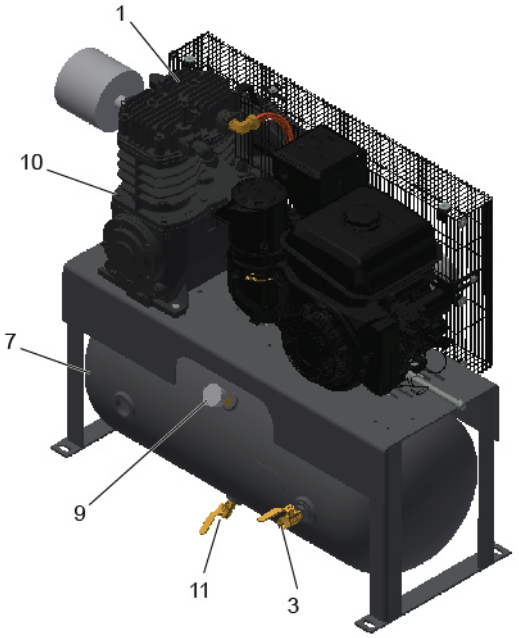

Tank-mounted, horizontal receiver

Reference	Description
1	Compressor
2	Pressure relief valve
3	Air outlet valve
4	Hour meter (option)
5	Electric cabinet
6	On/off switch
7	Air receiver
8	Air pressure switch
9	Air pressure gauge
10	Compressor
11	Condensate drain valve

Compressor variants

The **compressor block** includes:

- Crankcase and cylinders
- Air cooler piping
- Check valve
- Pressure relief valve

The unit comprises:

- **Tank-mounted CR with electric motor:** The compressor on a horizontal or vertical air receiver with air outlet valve, pressure gauge, pressure relief valve, air pressure switch with an on/off button (MDR), and condensate drain valve.
- **Tank-mounted CR with gas engine:** The compressor on an air receiver with air outlet valve, pressure gauge, pressure relief valve, and condensate drain valve.
- **CR base-mounted unit** is a fully operational unit with air pressure switch and on/off switches mounted on a frame (no air receiver).
- **CR Contractor units** are mobile compressors. They are equipped with a gas engine. The compressors have two outlet connections:
  - A connection for compressed air at working pressure.
  - A connection for compressed air at reduced pressure via a pressure regulator.

2.2 Hour meter option

The hour meter is triggered by the motor's magnetic field, so the hours display actual operation. When the motor is on, the hours icon will blink on/off indicating the hour meter is active.

With solid-state technology the hour meter is built with a custom chip and with solid construction for maximum durability for harsh environments and rugged applications.



Hour meter

Features

- Large 5 segment LCD display
- Low cost and small size
- No external power required
- No shunt required
- Solid-state electronics
- Quartz crystal
- Wide operating temperature range
- High reliability
- Easy to install
- Made in the U.S.A.

Specifications

Display Reading:	9999.9 Hour meter
Digit Height:	5-digits [8MM] LCD
Operating Voltage:	Internal lithium battery 15,000 hours continuous running
Temperature:	Standard -40°C to +85°C (-40°F to +185°F)
Vibration Resistance:	Withstands 10 to 75Hz @ 1 to 8 g's
Mounting Configuration:	Two hole base mount

2.3 Control piping

CR 2 to 15 hp

Air drawn through the air filter and inlet silencer into cylinders is compressed, then discharged through the cooler piping and “and check valve / unloader valve” into the air receiver.

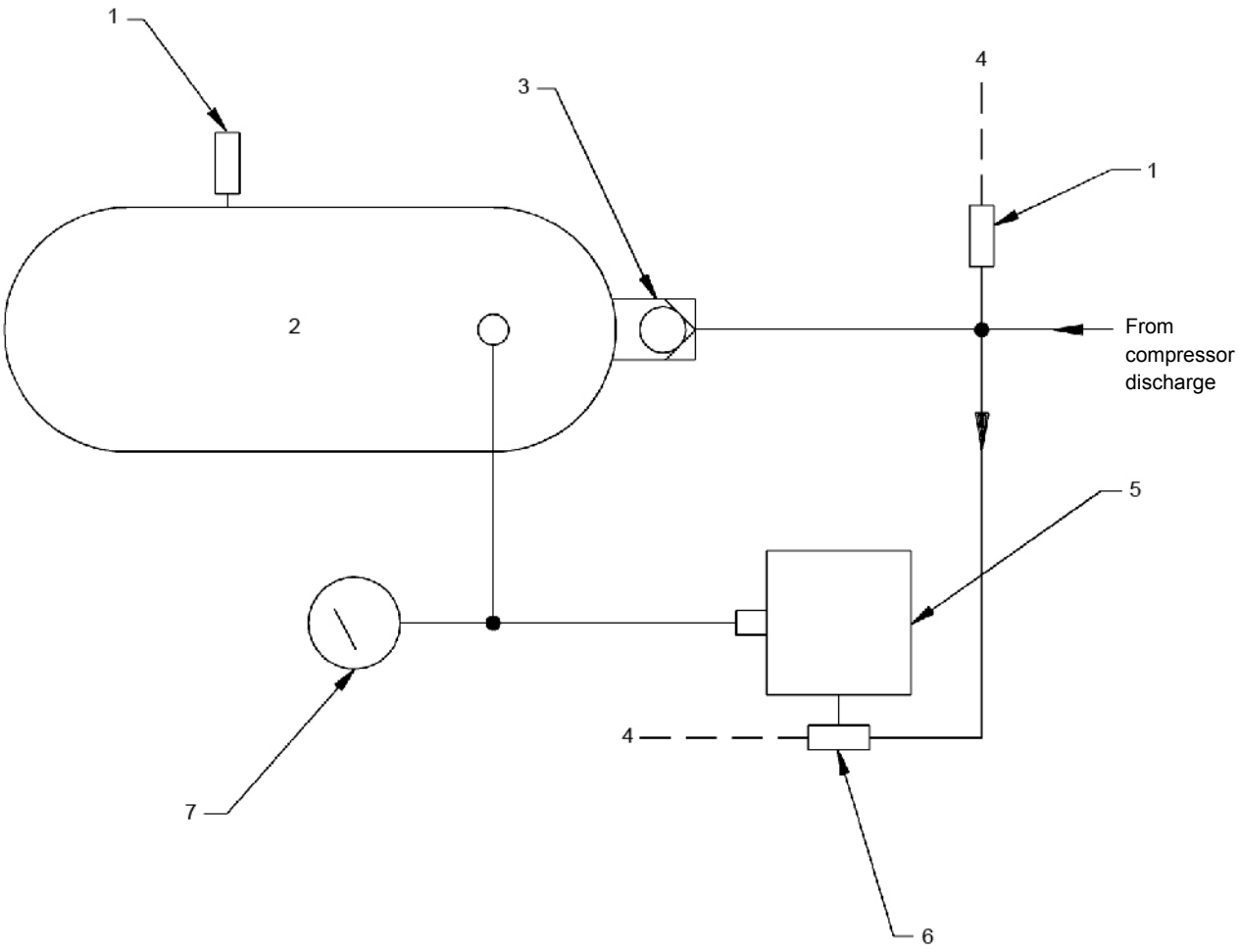

Control piping and regulating system with automatic start/stop

Reference	Description
1	Pressure relief valve
2	Air receiver
3	Discharge line check valve
4	Vent
5	Pressure switch
6	Pressure release valve on pressure switch
7	Pressure gauge

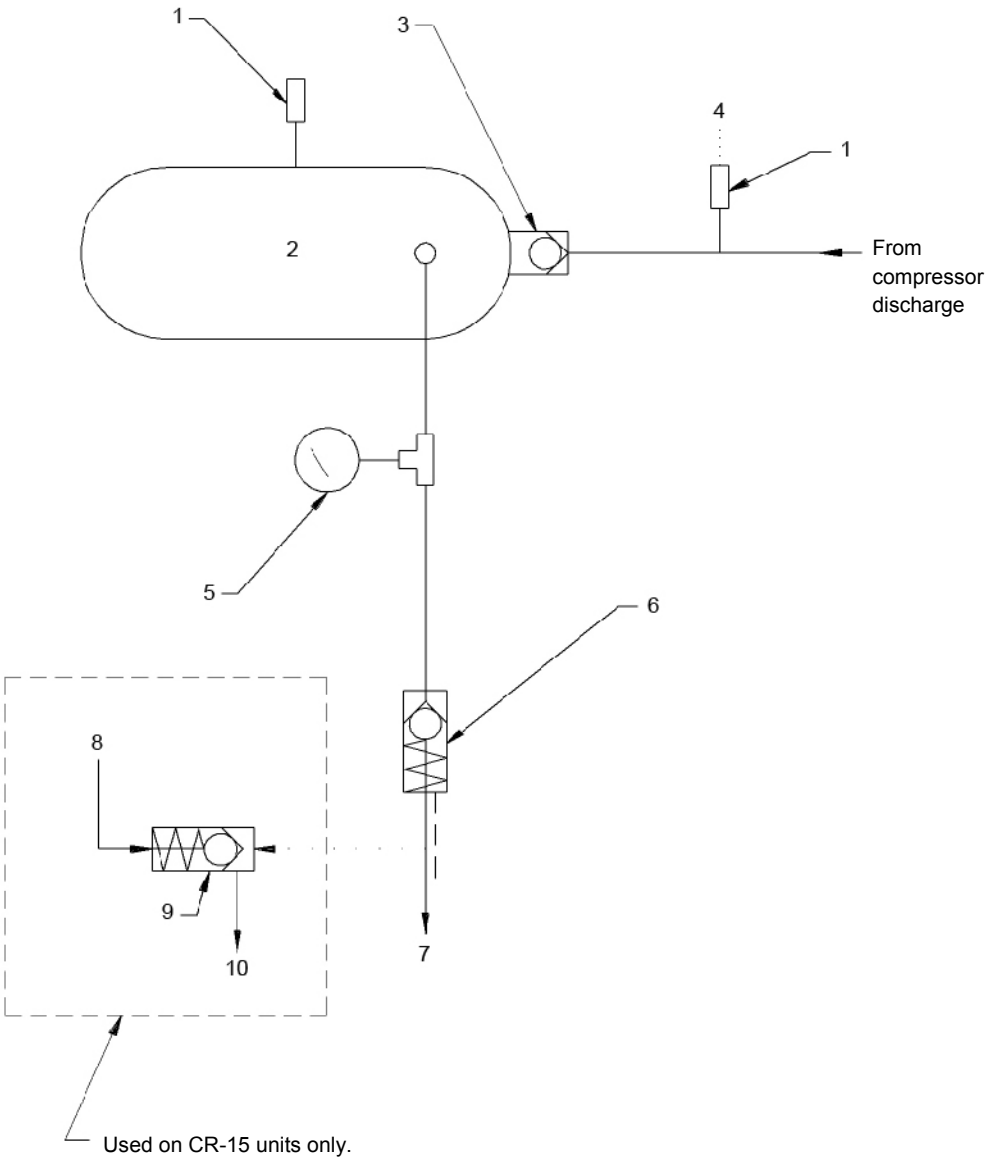

Control piping and regulating system with load/unload

Reference	Description
1	Pressure relief valve
2	Air receiver
3	Discharge line check valve
4	Vent
5	Pressure gauge
6	Pilot valve
7	Flow to head unloaders
8	Flow from compressor interstage
9	Electronic drain
10	Vent to atmosphere

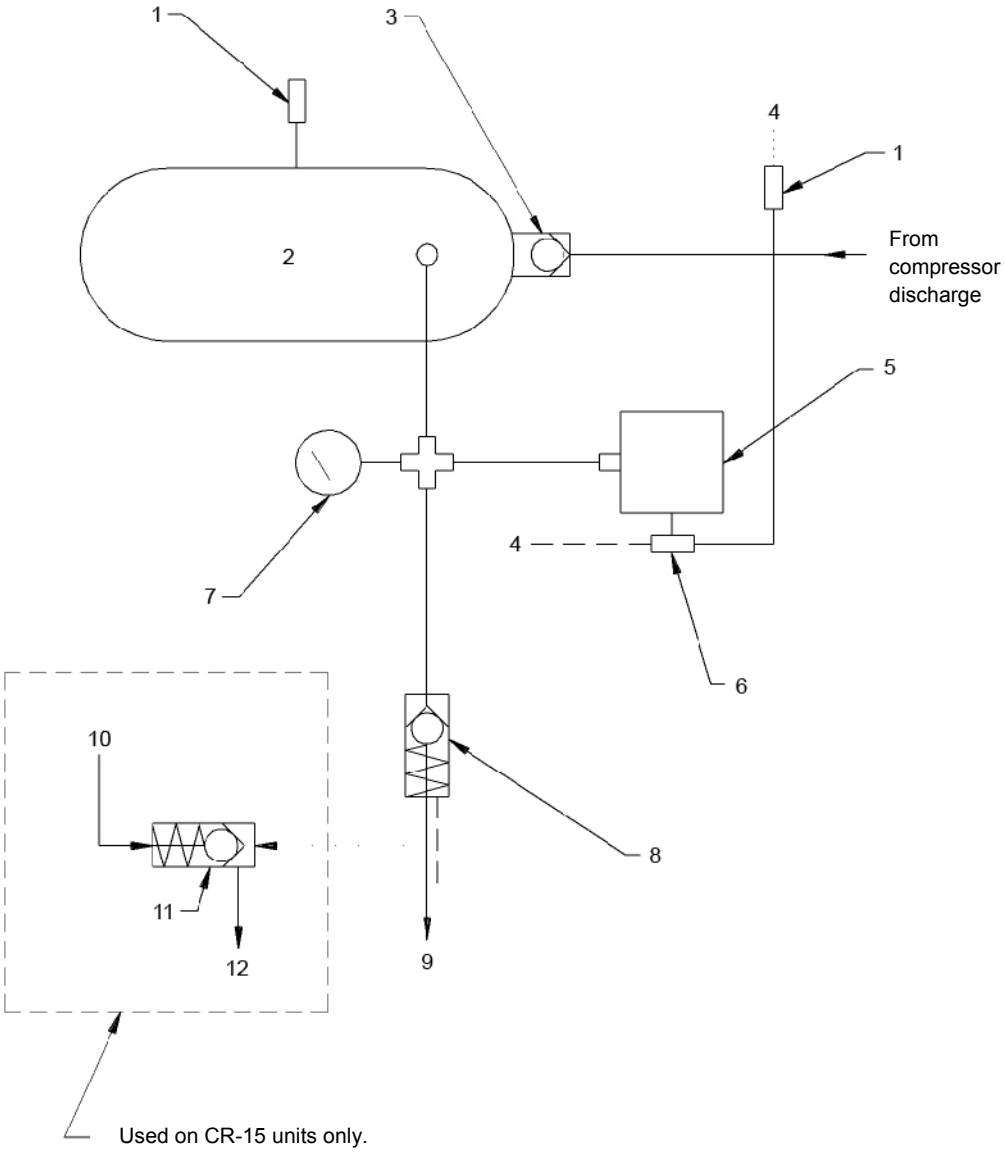

Control piping and regulating system with dual control and pilot

Reference	Description
1	Pressure relief valve
2	Air receiver
3	Discharge line check valve
4	Vent
5	Pressure switch
6	Pressure release valve on pressure switch
7	Pressure gauge
8	Pilot valve
9	Flow to head unloaders
10	Flow from compressor interstage
11	Electronic drain
12	Vent to atmosphere

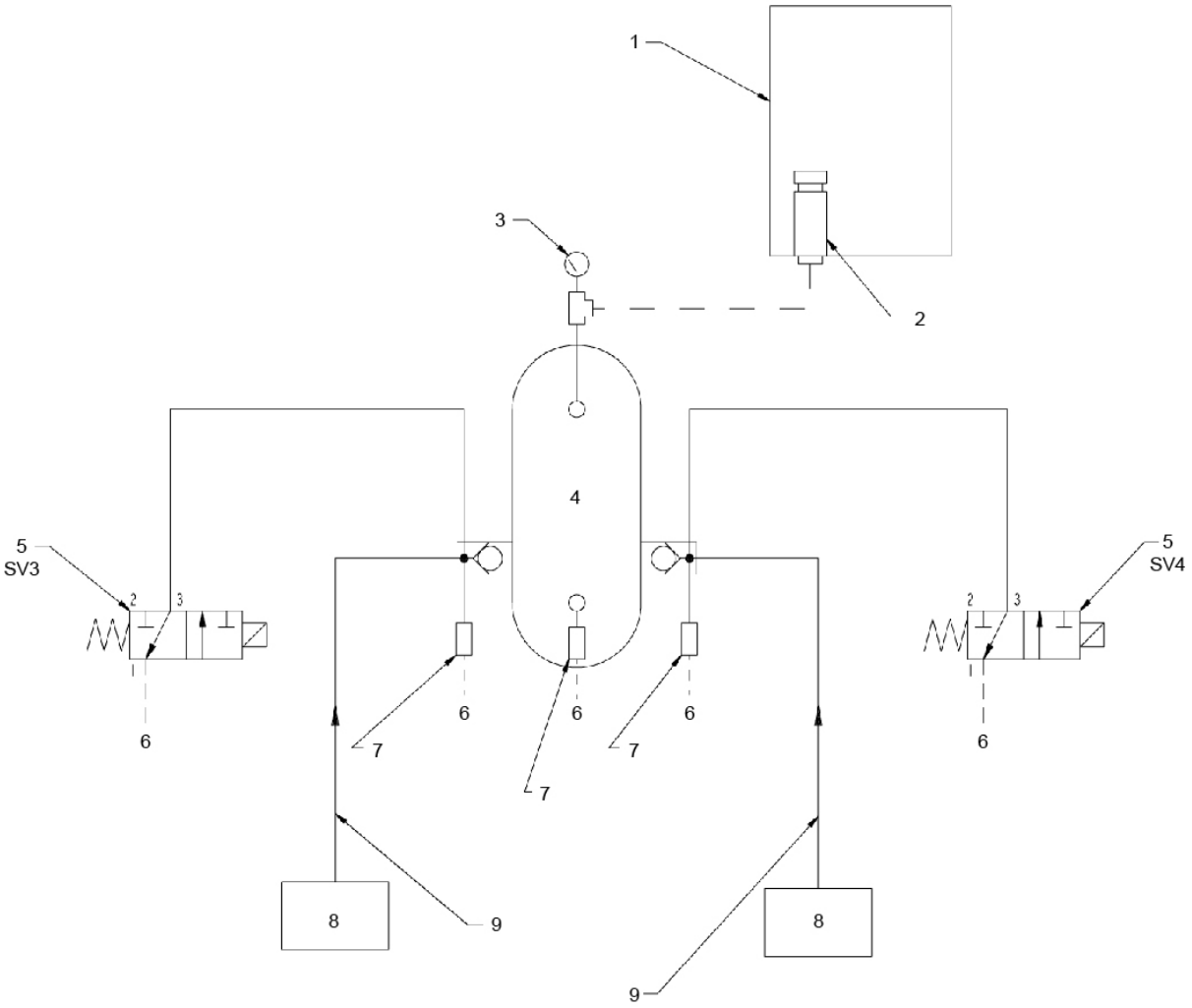

Control piping and regulating system, duplex tank mount with automatic start/stop

Reference	Description
1	Control panel
2	Pressure transducer
3	Pressure gauge
4	Air receiver
5	3-way normally-open solenoid valve
6	Vent
7	Pressure relief valve
8	Compressor
9	Discharge line

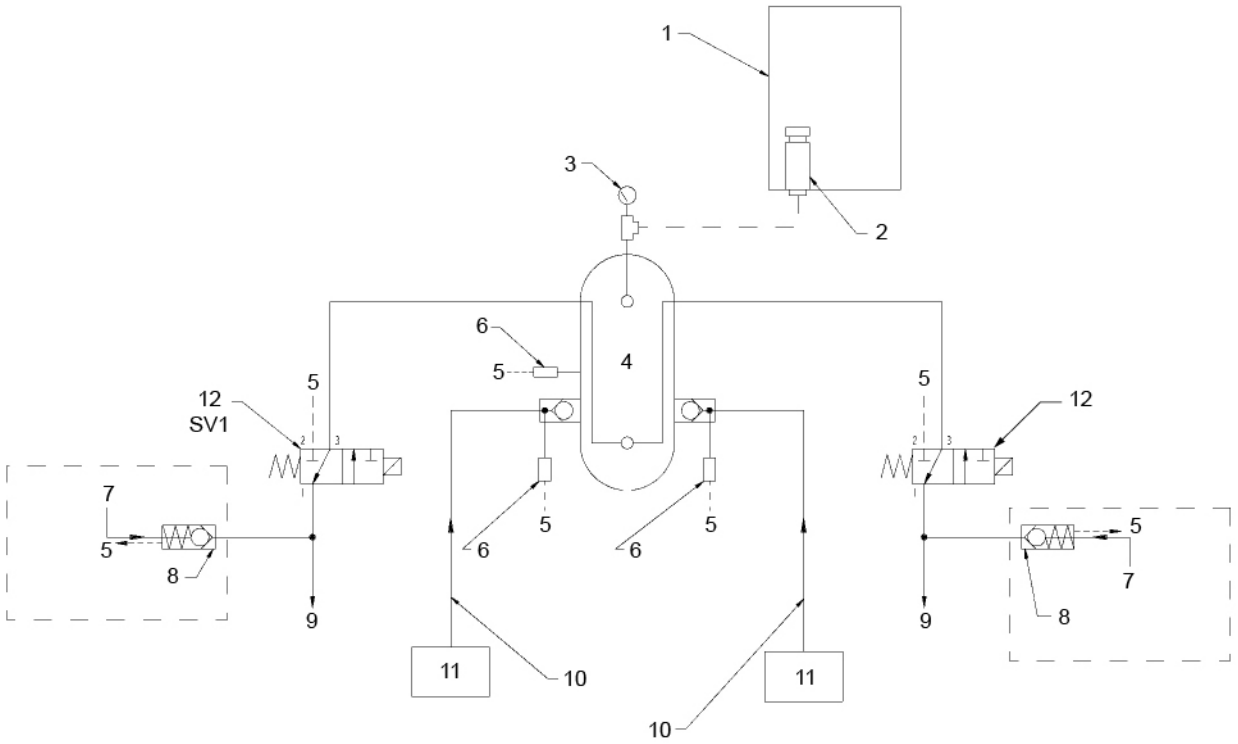

Control piping and regulating system, duplex tank mount with dual control and solenoid valve

Reference	Description
1	Control panel
2	Pressure transducer
3	Pressure gauge
4	Air receiver
5	Vent
6	Pressure relief valve
7	Flow from interstage
8	Interstage dump valve (Used on CR-15 units only.)
9	Flow to compressor head unloaders
10	Discharge line
11	Compressor
12	3-way normally-open solenoid valve

2.4 Regulating system

Automatic Start/Stop

The regulating system includes:

- Check valve
- Air pressure switch (MDR) with pressure release valve and on/off button (S1).

Operation

The air pressure switch opens and closes its contacts at pre-set pressures. During loaded operation, the contacts are closed: the motor is running.

When the pressure in the air receiver reaches the pre-set maximum pressure, the contacts as well as pressure release valve are opened. The motor stops, the air at the delivery side of the compressor is vented to atmosphere and the check valve closes to prevent venting of the receiver.

When the pressure in the air receiver decreases to the pre-set minimum pressure, the contacts of the air pressure switch close and the pressure release valve closes. The motor restarts and compressed air is supplied to the receiver again.

CR Contractor

The regulating system includes:

- Pilot valve
- Unloader with integrated check valve

Operation

The pilot valve opens and closes at pre-set pressures. During loaded operation, the pilot valve is closed, preventing the compressed air from flowing to the unloader.

When the pressure in the pulsation dampers reaches the pre-set maximum pressure, the pilot valve will open. Compressed air from the pulsation dampers will flow to the plunger which causes the unloading valve to open. The air at the delivery side of the compressor is blown through the silencer to the atmosphere and the check valve closes to prevent venting of the pulsation dampers. The compressor runs unloaded.

When the pressure in the pulsation dampers decreases to the pre-set minimum pressure, the pilot valve closes. Control air from the unloader plunger chamber is vented to the atmosphere. The unloading valve closes and compressed air is supplied to the pulsation dampers again.

3 Installation

3.1 Installation instruction

Install the unit in an area where the noise levels do not cause inconvenience and adequate ventilation is available for cooling purposes.

⚠	Before commencing installation, check that the electrical data on the compressor specification plate/s are compatible with the local power supply. Before connecting the electricity, ensure that the power supply is off and correctly isolated. The electrical power supplied to the compressor unit must be connected by a qualified electrician in accordance with the wiring diagram supplied with the plant. All wiring must be in accordance with UL regulations. Cable sizes given in section. Electric data are recommendations only.

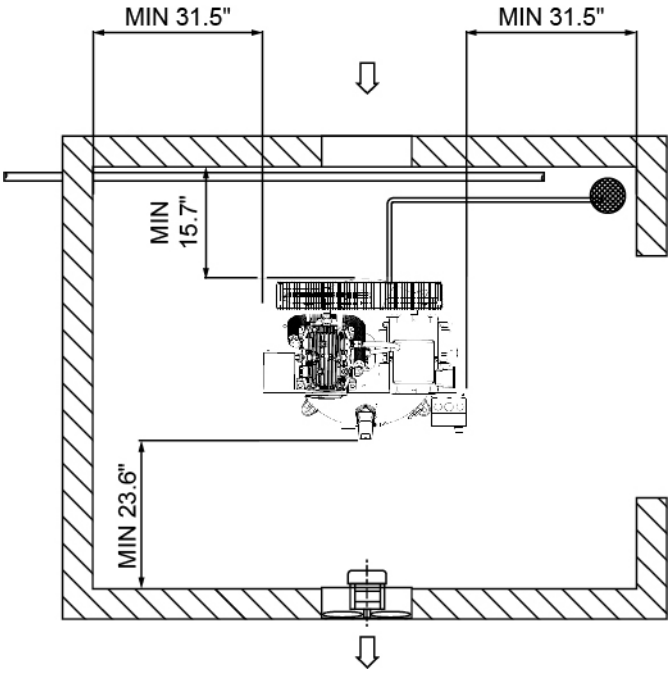

Installation proposal for CR with vertical receiver

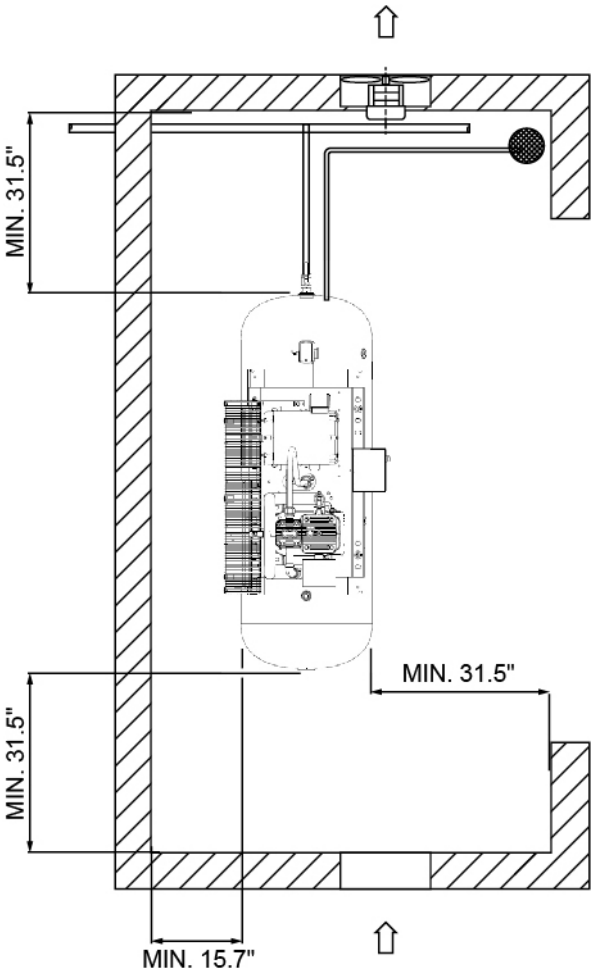

Installation proposal for CR with horizontal receiver

CR

Install the compressor horizontally, in a cool but frost-free and well-ventilated room. Place the compressor as level as possible; however, CR can be operated with a maximum inclination of 40% (22.5 degrees) in any direction. The air should be clean.

It is recommended to install an automatic condensate drain (available as an option) on the air receiver to ensure continuous condensate removal.

CR Contractor

The compressors are equipped with a lifting eye or yoke. When running, the compressor must be installed as level as possible; however, it can be operated temporarily in an inclined plane of maximum 25% (or 20 degrees). Keep the compressor in a frost-free and well-ventilated place.

3.2 Electrical connections

Warning

	The electrical connection must be carried out by an electrician and must correspond to the local codes. The indications on the motor data plate must correspond to the power supply voltage and frequency. The installation must include an isolating switch in the power line near the unit and be protected against short-circuits by fuses for each phase. Refer to Fuses and wire sizes. The power supply and grounding lines must be of suitable size. Refer to Fuses and wire sizes in Section 3.3. For Automatic Start/Stop, connect the power supply cables as shown in the electrical diagrams. Check the setting of the overload relay.

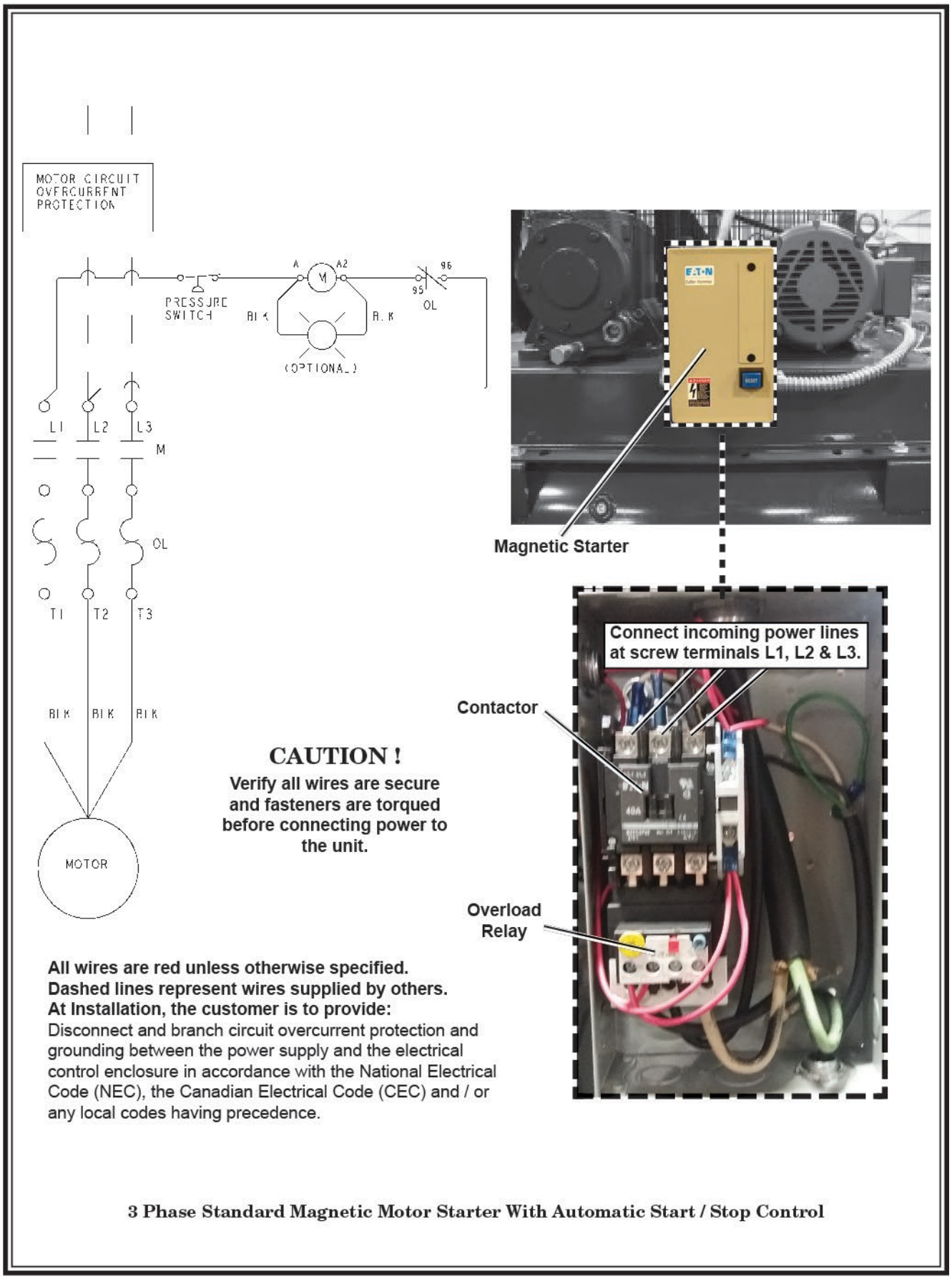
MOTOR CIRCUIT
OVERCURRENT
PROTECTION
PRESSURE
SWITCH
A
A2
96
95
OL
BLK
BLK
(OPTIONAL)
L1
L2
L3
M
OL
T1
T2
T3
BLK
BLK
BLK
MOTOR
Magnetic Starter
Connect incoming power lines
at screw terminals L1, L2 & L3.
Contactor
Overload
Relay
CAUTION !
Verify all wires are secure
and fasteners are torqued
before connecting power to
the unit.
All wires are red unless otherwise specified.
Dashed lines represent wires supplied by others.
At Installation, the customer is to provide:
Disconnect and branch circuit overcurrent protection and
grounding between the power supply and the electrical
control enclosure in accordance with the National Electrical
Code (NEC), the Canadian Electrical Code (CEC) and / or
any local codes having precedence.
3 Phase Standard Magnetic Motor Starter With Automatic Start / Stop Control

Fig. 3-1

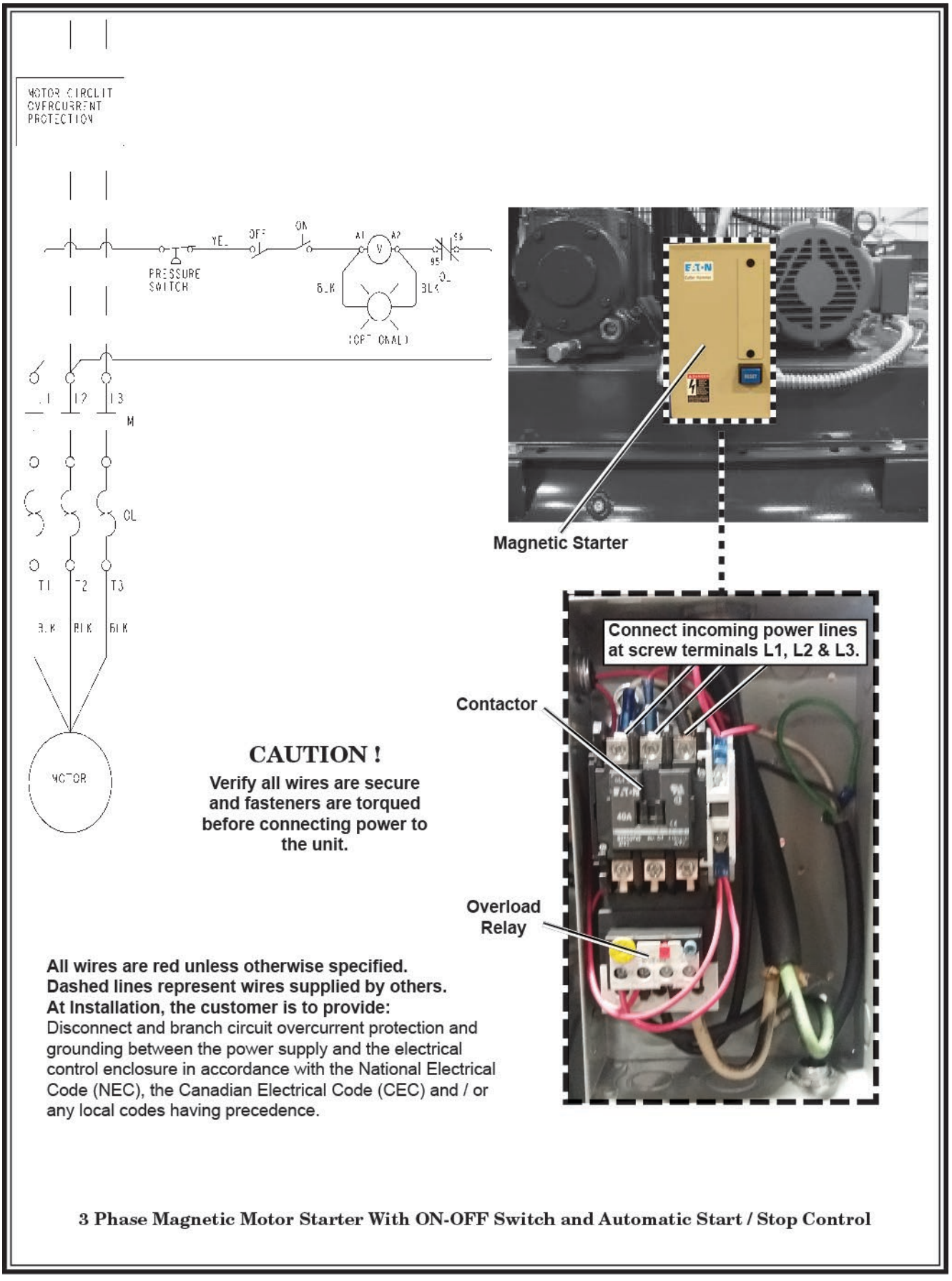
MOTOR CIRCUIT
OVERCURRENT
PROTECTION
PRESSURE
SWITCH
OFF
ON
A1
A2
95
96
L1
L2
L3
M
OL
T1
T2
T3
BLK
BLK
BLK
MOTOR
Magnetic Starter
Connect incoming power lines
at screw terminals L1, L2 & L3.
Contactor
Overload
Relay
CAUTION !
Verify all wires are secure
and fasteners are torqued
before connecting power to
the unit.
All wires are red unless otherwise specified.
Dashed lines represent wires supplied by others.
At Installation, the customer is to provide:
Disconnect and branch circuit overcurrent protection and
grounding between the power supply and the electrical
control enclosure in accordance with the National Electrical
Code (NEC), the Canadian Electrical Code (CEC) and / or
any local codes having precedence.
3 Phase Magnetic Motor Starter With ON-OFF Switch and Automatic Start / Stop Control

Fig. 3-2

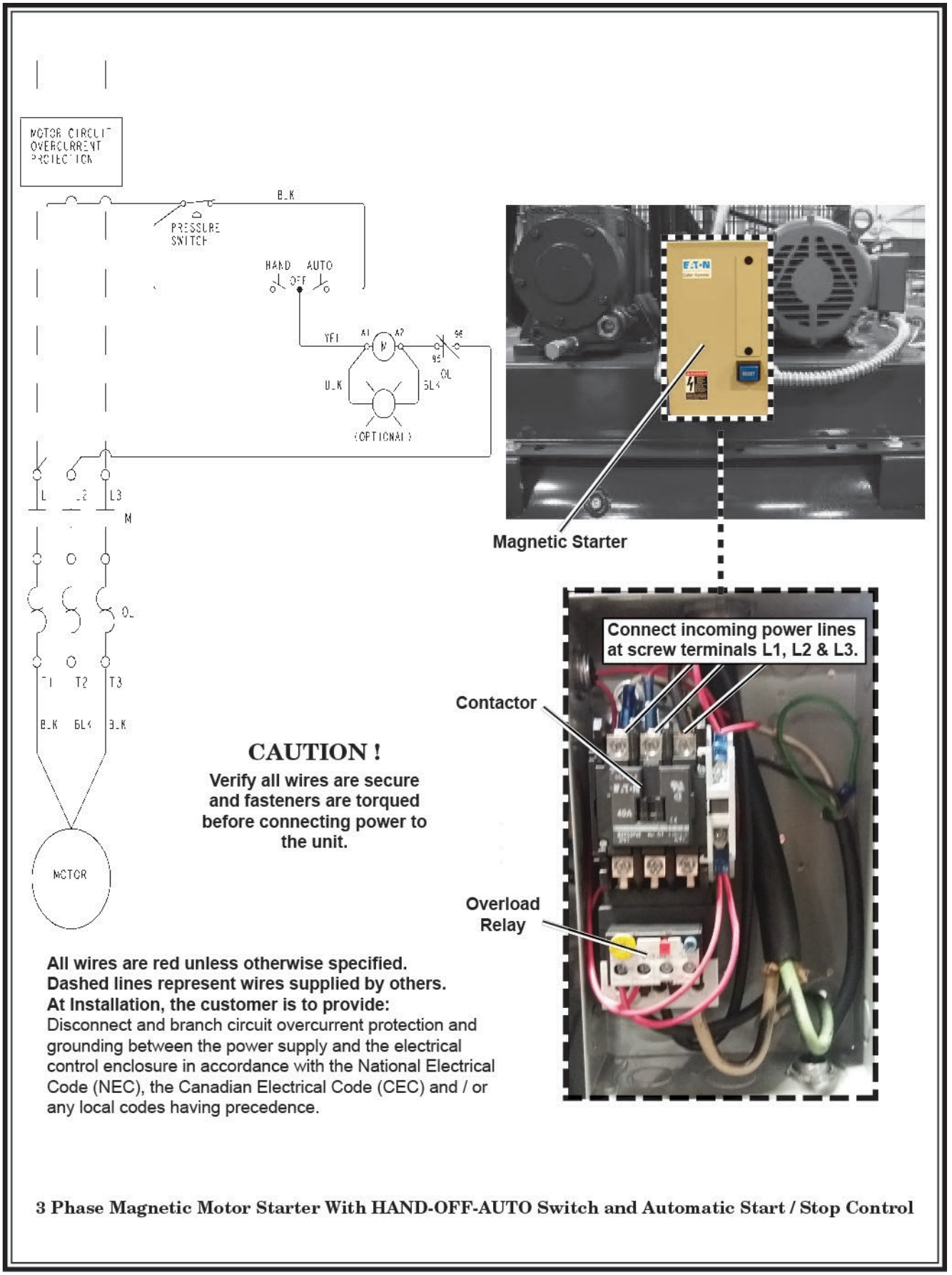
MOTOR CIRCUIT OVERCURRENT PROTECTION
BLK
PRESSURE SWITCH
HAND AUTO
OFF
YEL
A1
A2
96
95
OL
BLK
BLK
(OPTIONAL)
L1
L2
L3
M
OL
T1
T2
T3
BLK
BLK
BLK
MOTOR
Magnetic Starter
Connect incoming power lines at screw terminals L1, L2 & L3.
Contactor
Overload Relay
CAUTION !
Verify all wires are secure and fasteners are torqued before connecting power to the unit.
All wires are red unless otherwise specified.
Dashed lines represent wires supplied by others.
At Installation, the customer is to provide:
Disconnect and branch circuit overcurrent protection and grounding between the power supply and the electrical control enclosure in accordance with the National Electrical Code (NEC), the Canadian Electrical Code (CEC) and / or any local codes having precedence.
3 Phase Magnetic Motor Starter With HAND-OFF-AUTO Switch and Automatic Start / Stop Control

Fig. 3-3

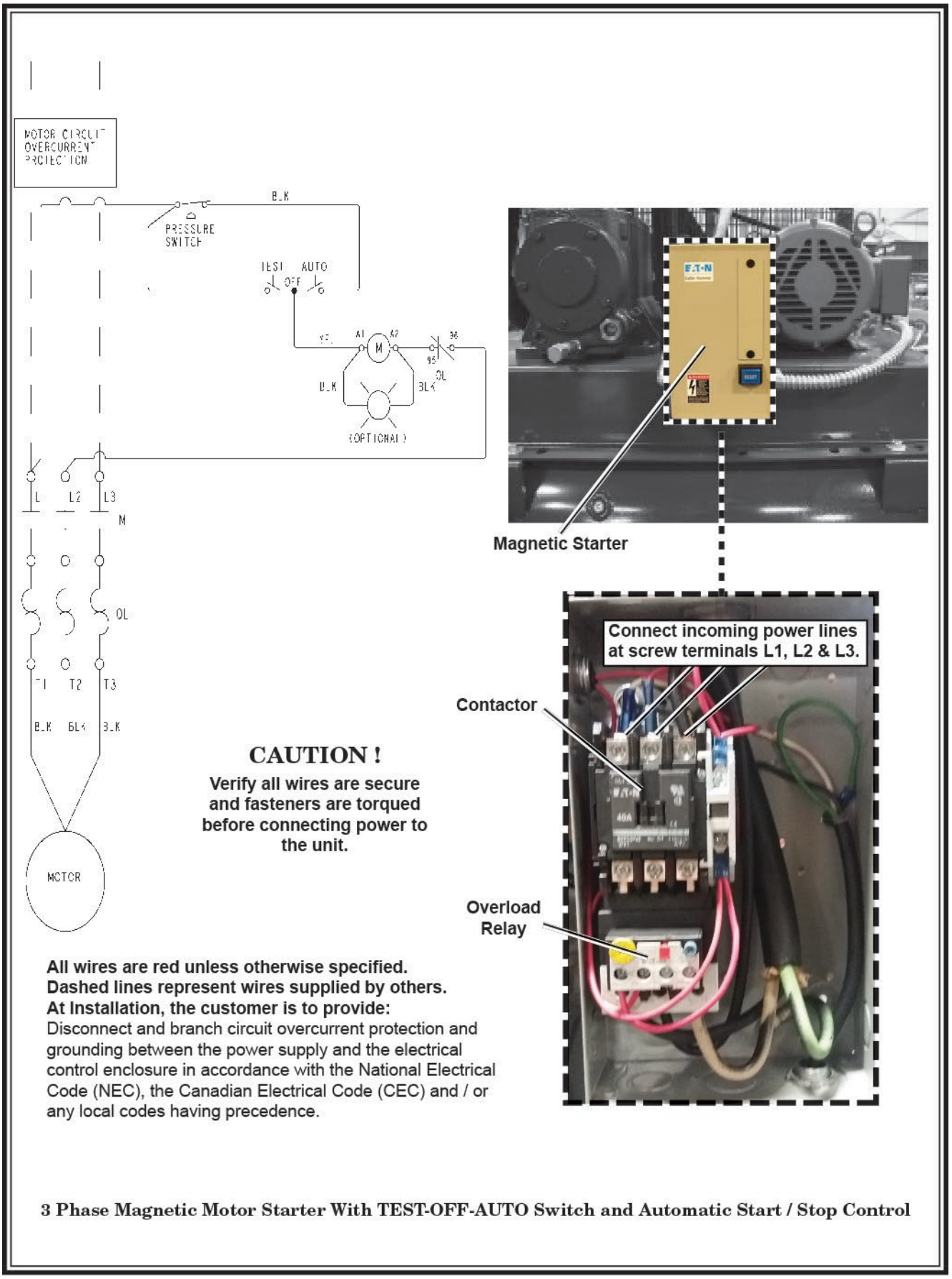
MOTOR CIRCUIT OVERCURRENT PROTECTION
PRESSURE SWITCH
TEST AUTO
OFF
A1
A2
M
96
95
OL
BLK
BLK
(OPTIONAL)
L1
L2
L3
M
OL
T1
T2
T3
BLK
BLK
BLK
MOTOR
Magnetic Starter
Connect incoming power lines at screw terminals L1, L2 & L3.
Contactor
Overload Relay
CAUTION !
Verify all wires are secure and fasteners are torqued before connecting power to the unit.
All wires are red unless otherwise specified.
Dashed lines represent wires supplied by others.
At Installation, the customer is to provide:
Disconnect and branch circuit overcurrent protection and grounding between the power supply and the electrical control enclosure in accordance with the National Electrical Code (NEC), the Canadian Electrical Code (CEC) and / or any local codes having precedence.
3 Phase Magnetic Motor Starter With TEST-OFF-AUTO Switch and Automatic Start / Stop Control

Fig. 3-4

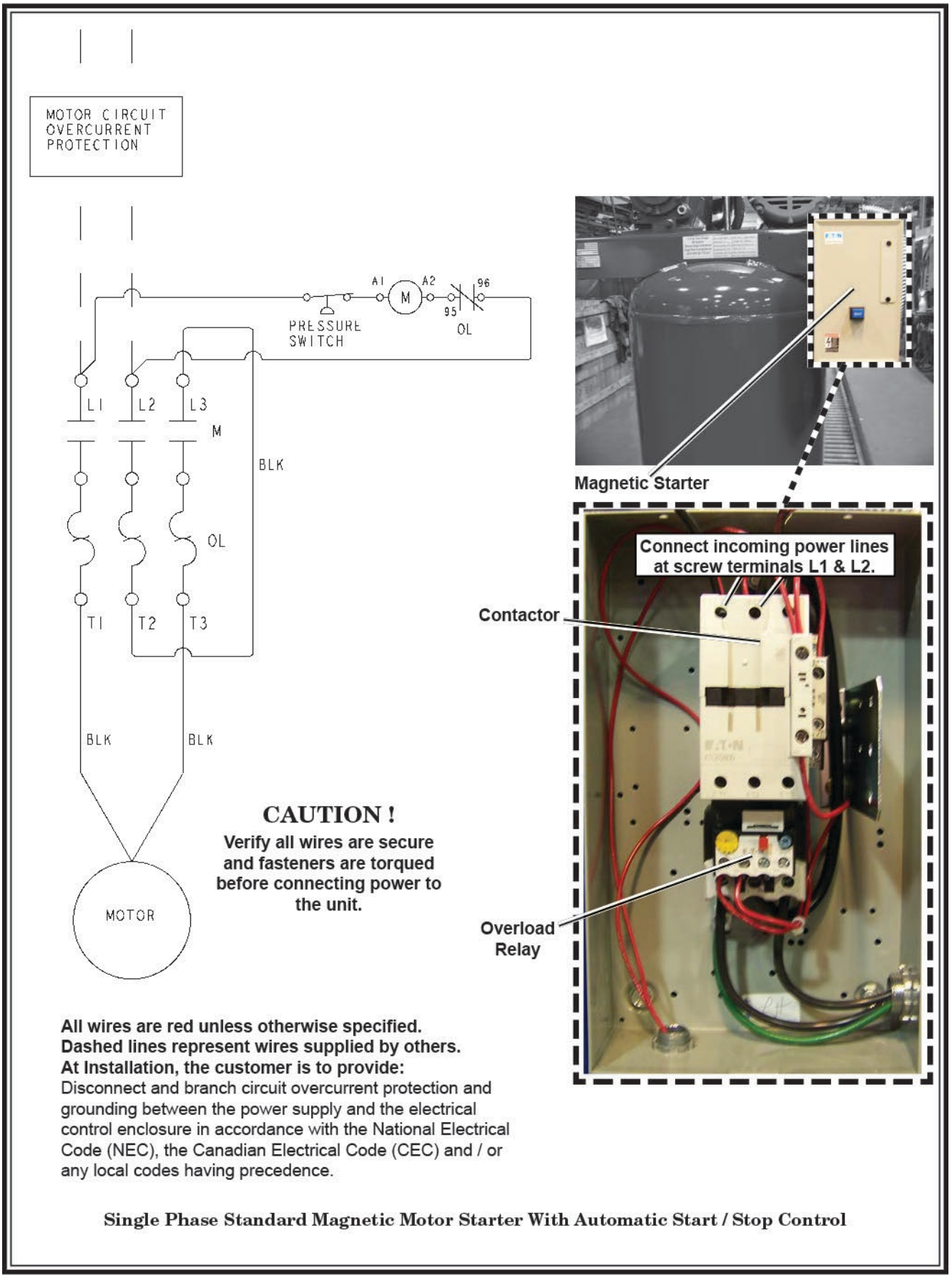
MOTOR CIRCUIT
OVERCURRENT
PROTECTION
A1
A2
M
96
95
PRESSURE
SWITCH
OL
L1
L2
L3
M
BLK
OL
T1
T2
T3
BLK
BLK
MOTOR
CAUTION !
Verify all wires are secure
and fasteners are torqued
before connecting power to
the unit.
Magnetic Starter
Connect incoming power lines
at screw terminals L1 & L2.
Contactor
Overload
Relay
All wires are red unless otherwise specified.
Dashed lines represent wires supplied by others.
At Installation, the customer is to provide:
Disconnect and branch circuit overcurrent protection and
grounding between the power supply and the electrical
control enclosure in accordance with the National Electrical
Code (NEC), the Canadian Electrical Code (CEC) and / or
any local codes having precedence.
Single Phase Standard Magnetic Motor Starter With Automatic Start / Stop Control

Fig. 3-5

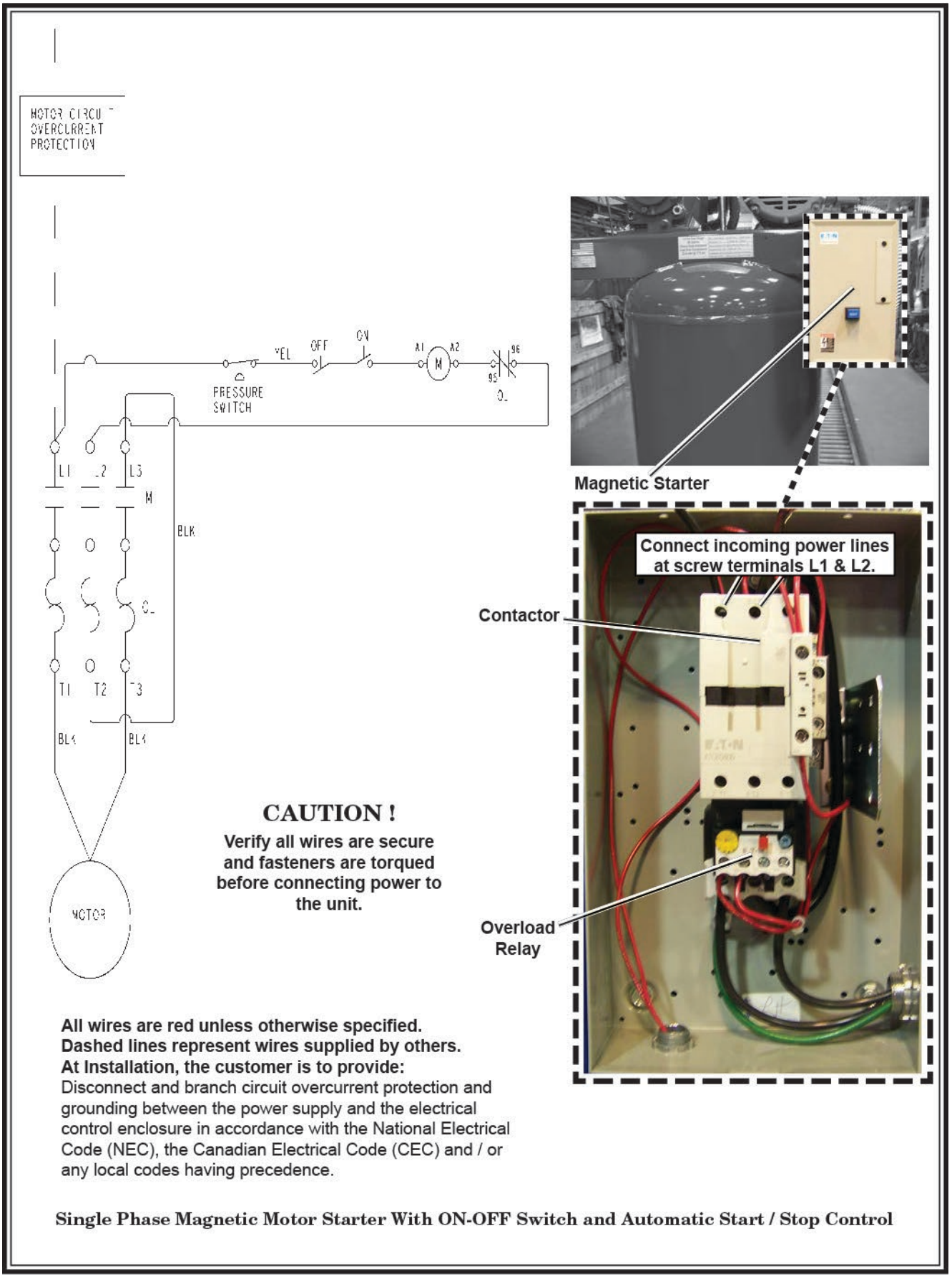
MOTOR CIRCU
OVERCURRENT
PROTECTION
PRESSURE
SWITCH
OFF
ON
A1
A2
M
95
96
L1
L2
L3
M
BLK
T1
T2
T3
MOTOR
Magnetic Starter
Connect incoming power lines
at screw terminals L1 & L2.
Contactor
Overload
Relay
CAUTION !
Verify all wires are secure
and fasteners are torqued
before connecting power to
the unit.
All wires are red unless otherwise specified.
Dashed lines represent wires supplied by others.
At Installation, the customer is to provide:
Disconnect and branch circuit overcurrent protection and
grounding between the power supply and the electrical
control enclosure in accordance with the National Electrical
Code (NEC), the Canadian Electrical Code (CEC) and / or
any local codes having precedence.
Single Phase Magnetic Motor Starter With ON-OFF Switch and Automatic Start / Stop Control

Fig. 3-6

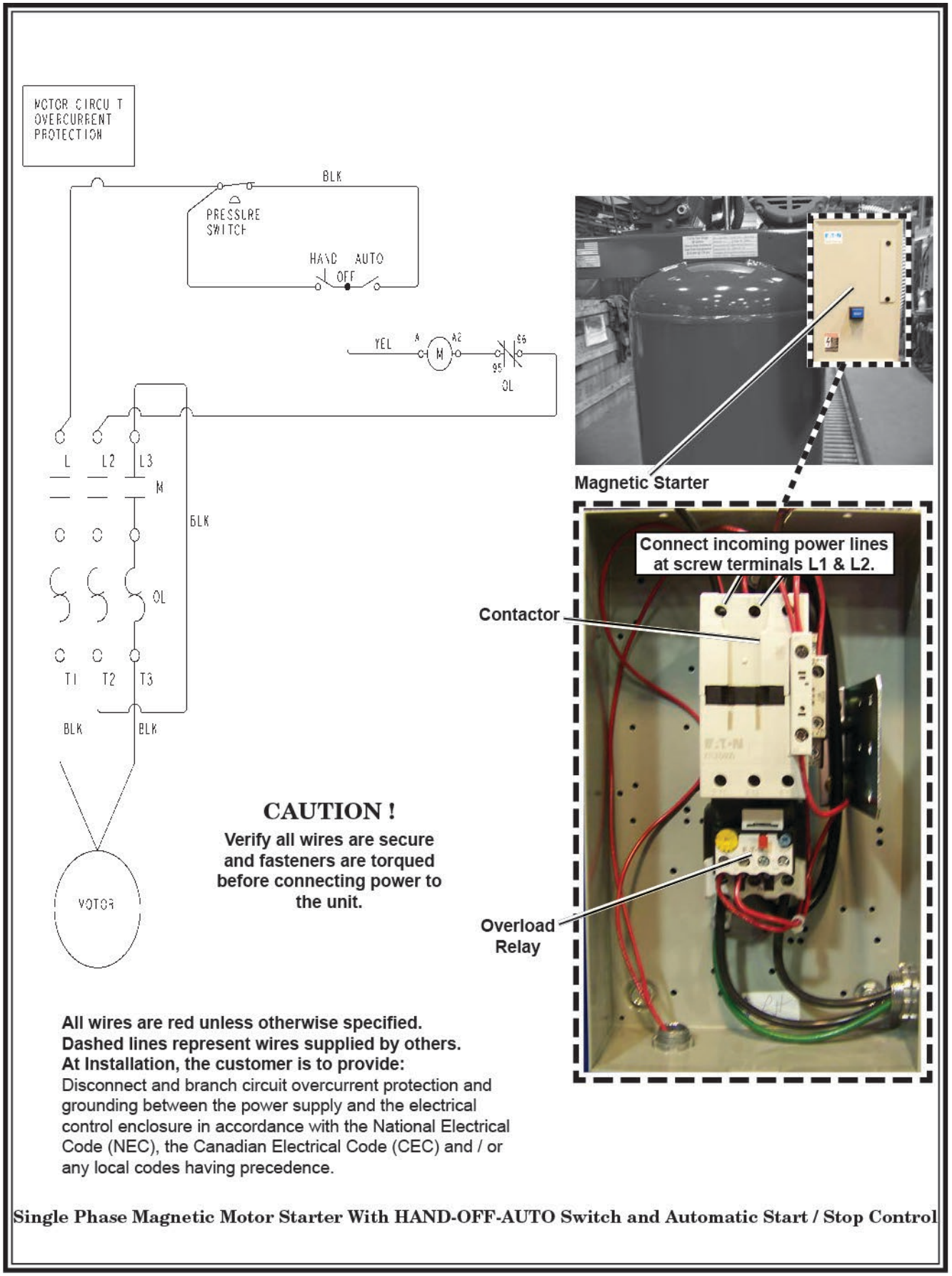
MOTOR CIRCUIT OVERCURRENT PROTECTION
BLK
PRESSURE SWITCH
HAND AUTO OFF
YEL
A
A2
M
95
96
OL
L
L2
L3
M
BLK
OL
T1
T2
T3
BLK
BLK
MOTOR
CAUTION !
Verify all wires are secure and fasteners are torqued before connecting power to the unit.
Magnetic Starter
Connect incoming power lines at screw terminals L1 & L2.
Contactor
Overload Relay
All wires are red unless otherwise specified.
Dashed lines represent wires supplied by others.
At Installation, the customer is to provide:
Disconnect and branch circuit overcurrent protection and grounding between the power supply and the electrical control enclosure in accordance with the National Electrical Code (NEC), the Canadian Electrical Code (CEC) and / or any local codes having precedence.
Single Phase Magnetic Motor Starter With HAND-OFF-AUTO Switch and Automatic Start / Stop Control

Fig. 3-7

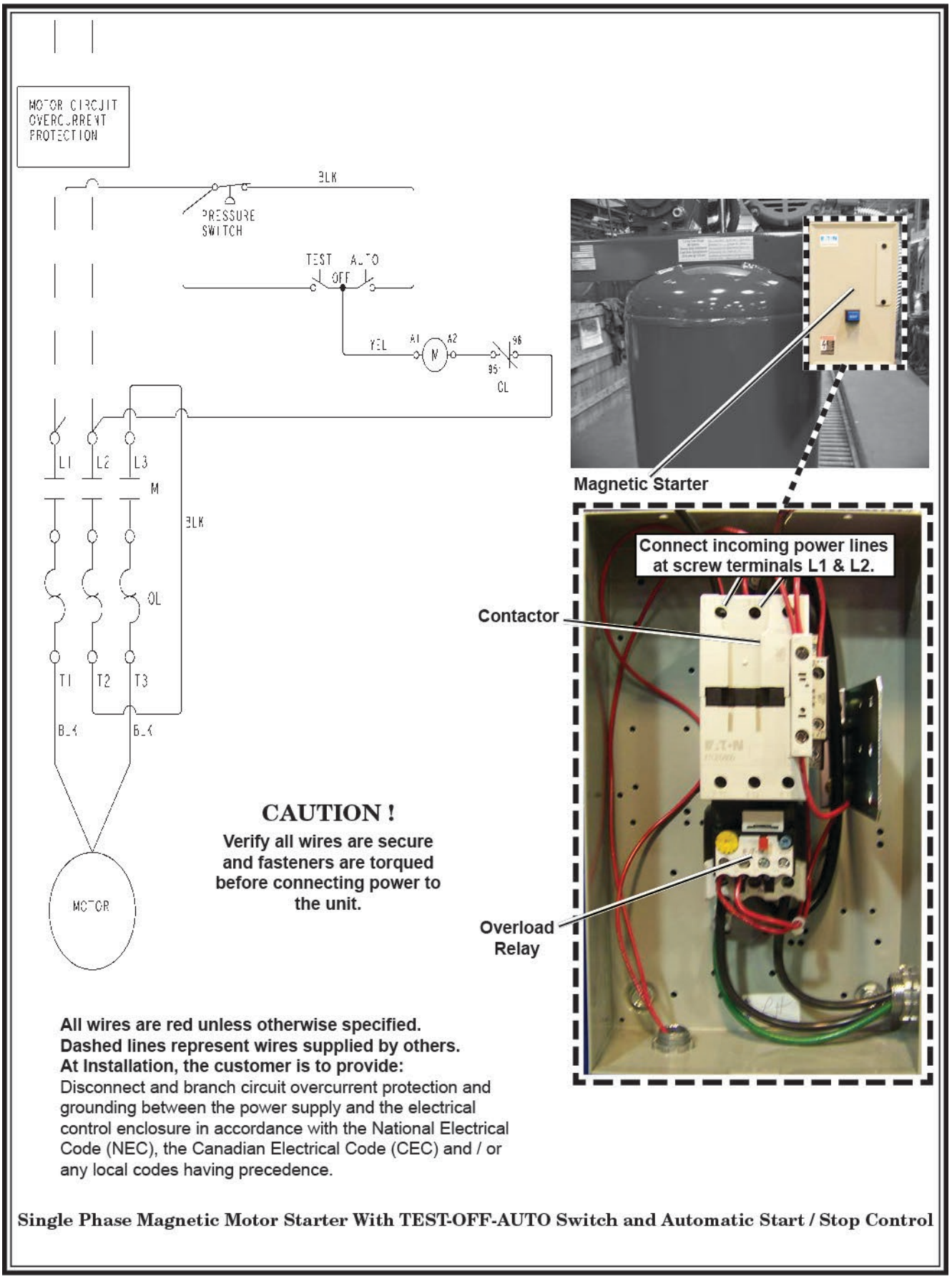
MOTOR CIRCUIT
OVERCURRENT
PROTECTION
BLK
PRESSURE
SWITCH
TEST
AUTO
OFF
YEL
A1
A2
M
96
95
OL
L1
L2
L3
M
BLK
OL
T1
T2
T3
MOTOR
Magnetic Starter
Connect incoming power lines
at screw terminals L1 & L2.
Contactor
Overload
Relay
CAUTION !
Verify all wires are secure
and fasteners are torqued
before connecting power to
the unit.
All wires are red unless otherwise specified.
Dashed lines represent wires supplied by others.
At Installation, the customer is to provide:
Disconnect and branch circuit overcurrent protection and
grounding between the power supply and the electrical
control enclosure in accordance with the National Electrical
Code (NEC), the Canadian Electrical Code (CEC) and / or
any local codes having precedence.
Single Phase Magnetic Motor Starter With TEST-OFF-AUTO Switch and Automatic Start / Stop Control

Fig. 3-8

Pressure Switch

To Remove the Cover:

1. Turn the switch handle to "OFF" position.
2. Remove small screws on side of the cover.
3. Pull the cover away from the pressure switch.

To Re-install the Cover:

1. Make sure the switch handle is in the "OFF" position (as shown).
2. Carefully slide the cover over the pressure switch.

DO NOT FORCE!

3. Re-install the small cover screws and tighten.

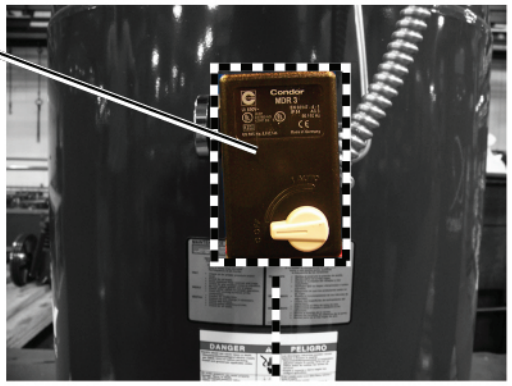

CAUTION !

Verify all wires are secure and fasteners are torqued before connecting power to the unit.

Use wire lugs on incoming power wires. Do not attempt to twist bare wire end under the screw heads.

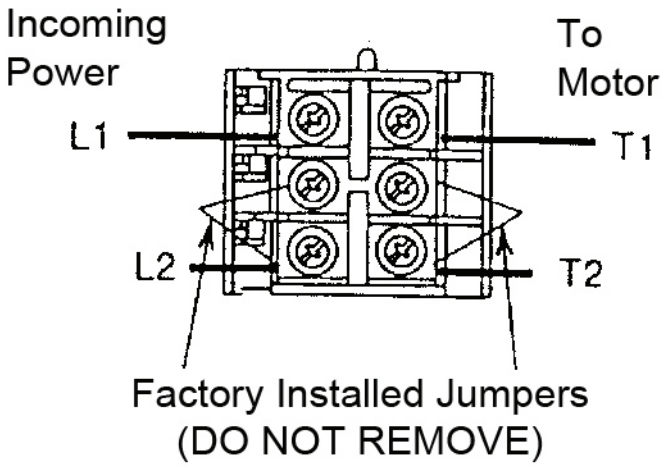

Connect incoming power lines at screw terminals L1 & L2.

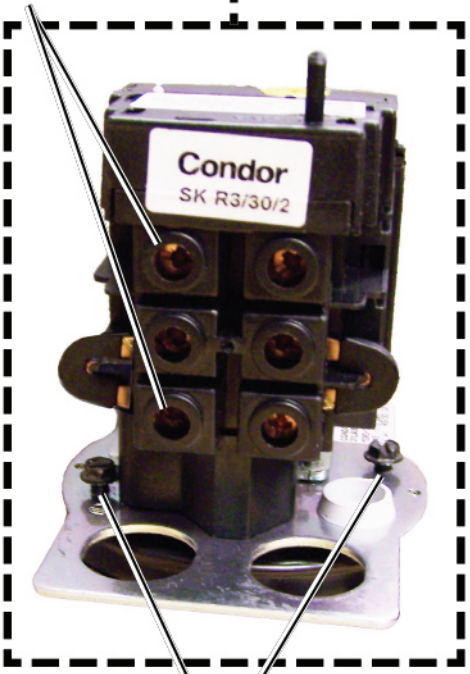

Connect ground wires.

At Installation, the customer is to provide:
Disconnect and branch circuit overcurrent protection and grounding between the power supply and the electrical control enclosure in accordance with the National Electrical Code (NEC), the Canadian Electrical Code (CEC) and / or any local codes having precedence.

Single Phase Condor Combination Pressure Switch / Overload Relay Wired to an 1800 RPM Motor Connection Diagram

Fig. 3-9

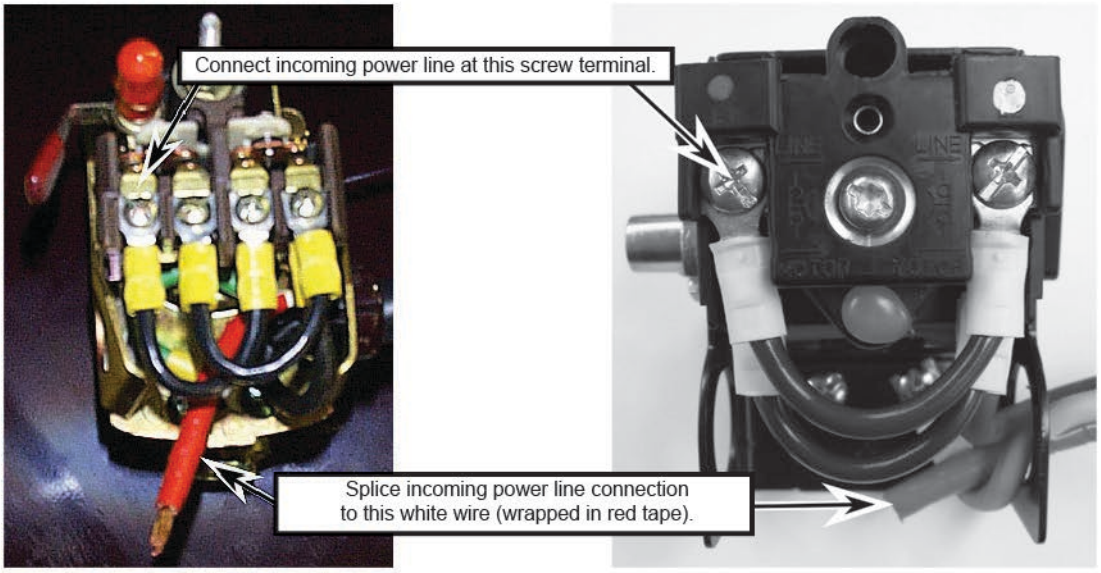

SQUARE D PRESSURE SWITCH

FURNAS / HUBBELL PRESSURE SWITCH

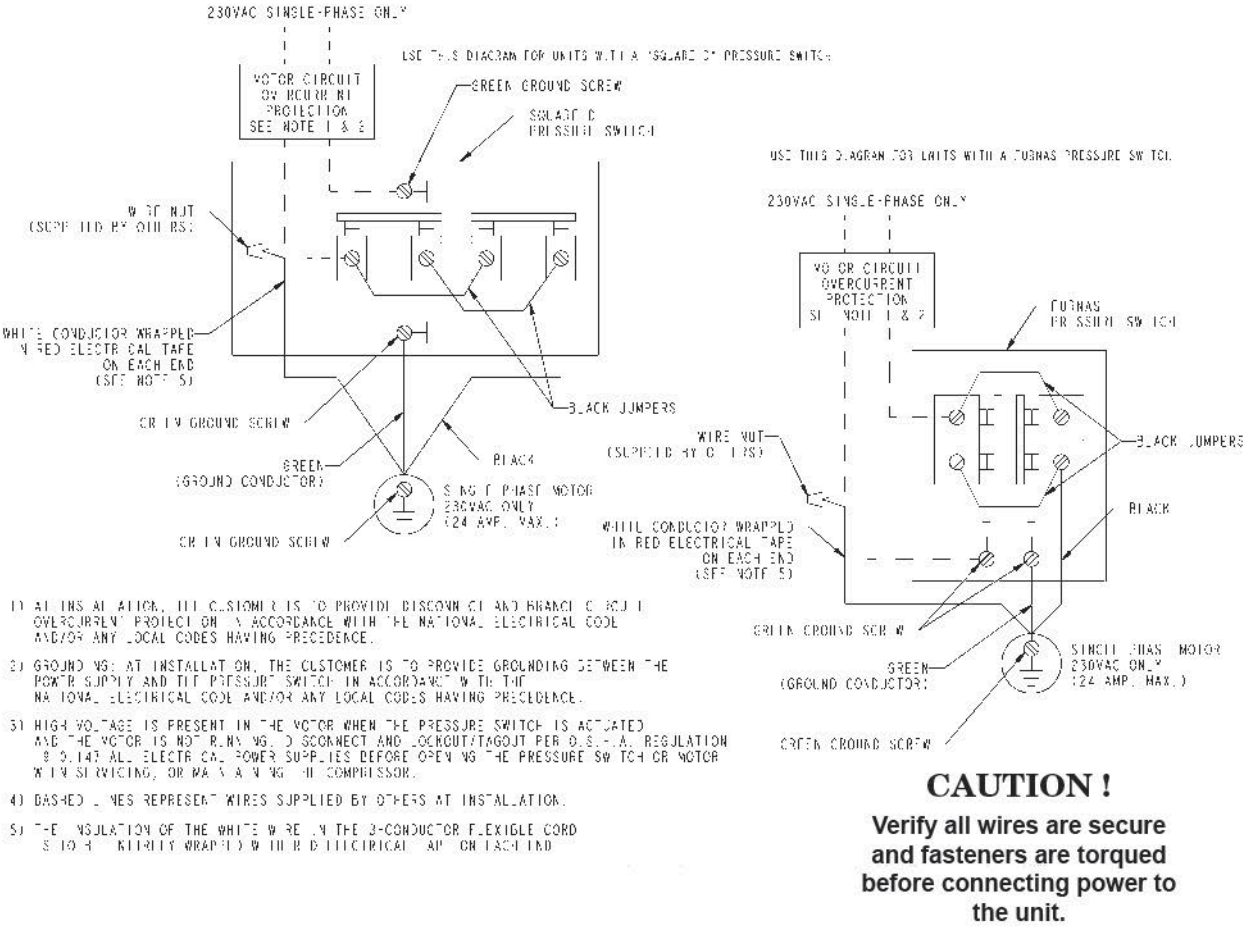

Start / Stop - Pressure Switch / Motor

Fig. 3-10

Pressure Switch

To Remove the Cover:

1. Turn the switch handle to "OFF" position.
2. Remove small screws on side of the cover.
3. Pull the cover away from the pressure switch.

To Re-install the Cover:

1. Make sure the switch handle is in the "OFF" position (as shown).
2. Carefully slide the cover over the pressure switch.

DO NOT FORCE!

3. Re-install the small cover screws and tighten.



Use wire lugs on incoming power wires. Do not attempt to twist bare wire end under the screw heads.

Connect incoming power lines at screw terminals labeled "LINE".

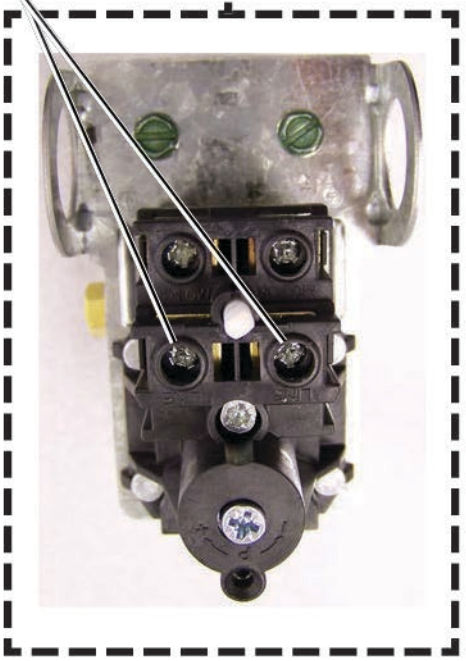

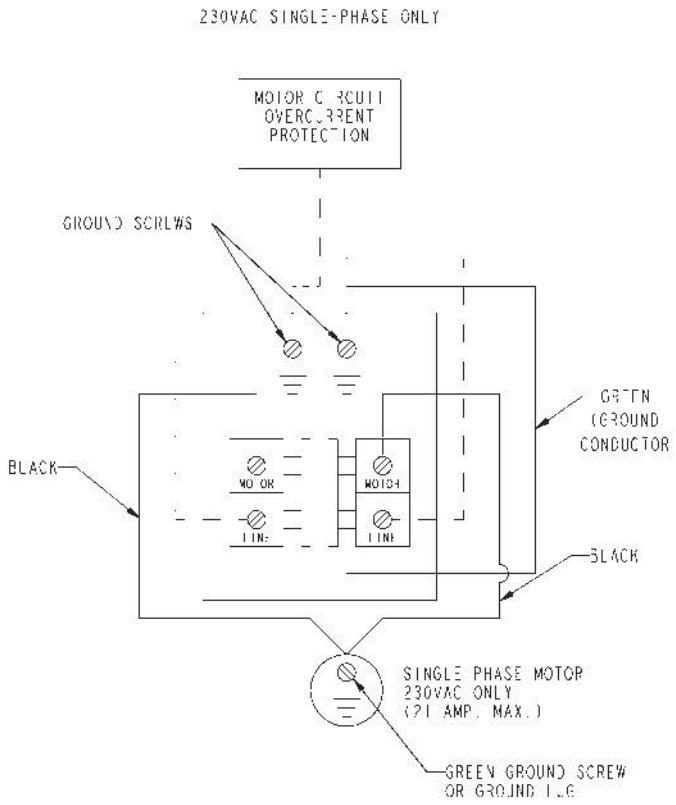

CAUTION !

Verify all wires are secure and fasteners are torqued before connecting power to the unit.

At Installation, the customer is to provide:
Disconnect and branch circuit overcurrent protection and grounding between the power supply and the electrical control enclosure in accordance with the National Electrical Code (NEC), the Canadian Electrical Code (CEC) and / or any local codes having precedence.

Single Phase Condor Pressure Switch Wired to a 3600 RPM Motor Connection Diagram

Fig. 3-11

3.3 Fuses and wire sizes

Values shown here have been determined using National Electrical Code (NFPA 70). Local electrical code requirements my differ. Refer to your local electrical code.

	Volts Single Phase (V)	Volts Three Phase (V)	Fuses (Dual Element Time-Delay) (A)	Wire Size (minimum)
CR_5	230	-	50	10
CR_5	-	200	35	14
	-	230	30	14
	-	460	15	14
	-	575	15	14
CR_7.5	230	-	70	8
CR_7.5	-	200	45	10
	-	230	40	12
	-	460	20	14
	-	575	20	14
CR_10	-	200	60	10
	-	230	50	10
	-	460	25	14
	-	575	20	14
CR_15	-	200	90	6
	-	230	80	8
	-	460	40	12
	-	575	30	14

Motor Amperage
This is the maximum Full-Load Three Phase Standard Motors, 1.15 SF.
NEC Table 430.250
Single Phase Full-Load Motor Amps are from NEC Table 430-248

NEC Table 430.52 used for calculating Fuse size.

NEC 240.6 Used to select Standard Fuse Sizes
15, 20, 25, 30, 35, 40, 45, 50, 60, 70, 80, 90, 100, 110, 125, 150, 175, 200, 225, 250, 300, 350, 400, 450, 500, 600, 700, 800, 1000, 1200, 1600, 2000, 2500, 3000, 4000, 5000, and 6000 amperes.

NEC 430.24 used to determine minimum wire size needed.

4 Operating instructions

4.1 Initial start-up

If the compressor has not run for the past 6 months (at initial start-up check the date on the data plate), it is strongly recommended to improve the lubrication of the compressor element: drain the oil, refill the compressor with the same oil while turning the crankshaft.

1. For tank-mounted and base mounted units, remove the RED transport brackets from underneath the compressor.
2. Check the electrical installation, which must be in accordance with the instructions given in Electrical connections.
3. CR units are filled with Piston Fluid compressor oil. Check that the oil level is still at the top of the red circle of sight-glass.
4. Switch on the voltage. Start the motor.
5. Check the operation of the air pressure switch. Refer to Adjustment of pressure switch. Check the operation of the pilot valve when equipped. Refer to Adjustment of pilot valve.
6. On CR 15 compressors, check for correct direction of rotation, as indicated by the arrow on the fan housing.

4.2 Starting

CR

1. Check the oil level, which must be at the top of the red circle of the sight-glass. The minimum level is the lower part of the red circle.
2. Switch on the voltage.
3. Turn the switch to position I (Auto), or turn switch (S1) to position I.

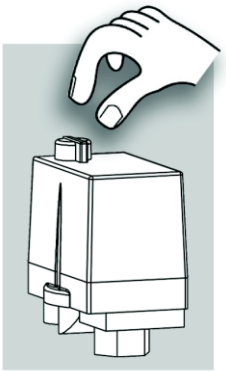



CR Contractor with electrical motor

1. Check the oil level, which must be near the top of the red circle of the sight-glass. The minimum level is the lower part of the red circle.
2. Set the pilot valve in the unload position by turning the red handle 90 degrees. Refer to Adjustment of pilot valve.
3. Attach the air lines to the air outlets.
4. Plug in and switch on the voltage at the main circuit breaker.

	**Warning:** Never move the compressor after plugging it in.

5. Move the switch to position I or turn switch (S1) to position I.
6. Open the outlet valves (AV1 and AV2).
7. Set the pilot valve in the load position by turning the red handle 90 degrees. Refer to Adjustment of pilot valve.
8. Turn the regulating knob of the pressure regulator clockwise or counter-clockwise to increase or decrease the pressure at the outlet of the pressure regulator.

	Regularly drain condensate.

CR Contractor with gas engine

1. On CR check the oil level, which must be near the top of the red circle of the sight-glass. The minimum level is the lower part of the red circle.
2. Check the engine oil level as follows:
   - Remove the oil filler cap and wipe the dipstick clean.
   - Insert the dipstick into the filler neck, but do not screw it in.
   - The oil level must show between the minimum and maximum marks on the dipstick.
3. Fill the fuel tank with unleaded or low-leaded gasoline.
4. Start the engine. Refer to the engine “Owner’s manual”.
5. Attach the air lines to the air outlets.
6. Open the outlet valves (AV1/2).
7. Set the pilot valve in the load position by turning the red handle 90 degrees. Refer to Adjustment of pilot valve.
8. Turn the regulating knob of the pressure regulator clockwise or counter-clockwise to increase or decrease the pressure at the outlet of the pressure regulator.

	Regularly drain condensate.

4.3 Stopping

CR

1. Turn the switch to position 0 (Off), or push switch (S1) to position 0.
2. Close air outlet valve.
3. Switch off the voltage.

If a compressor with pressure switch stops during operation because of a power failure, the pressure from the air outlet pipe must be released by moving the switch on top of the air pressure switch to 0 to prevent the compressor from restarting against back-pressure when the power becomes live again.

CR Contractor with Pilot Valve

1. Set the pilot valve in the unload position by turning the red handle 90 degrees. Refer to Adjustment of pilot valve.
2. On CR Contractor units with electrical motor, move switch to position 0 or push switch (S1) to position 0. If the compressor is not required for immediate further use, switch off the voltage at the main circuit breaker and unplug.
3. On CR Contractor units with gas engine, stop the engine. Refer to the engine “Owner’s manual”.
4. Close the air outlet valves (AV1 and AV2). Depressurize and disconnect the air lines from the outlet valves.

4.4 Taking out of operation

At the end of the service life of the compressor, proceed as follows:

1. Stop the compressor and close the air outlet valve(s).
2. Switch off the voltage and disconnect the compressor from the mains.
3. Depressurize the compressor.
4. Shut off and depressurize the part of the air net which is connected to the outlet valve. Disconnect the compressor from the air net.
5. Drain the oil.

4.5 Storage after installation

Procedure

	If the compressor is going to be stored without running from time to time, protective measures must be taken.

- Protect the machine against dust and moisture, if possible in a clean, cool, dry and well ventilated area.
- Make sure that the machine is not subject to vibration.
- If the machine is stored in packing, put some vapor corrosion inhibitor (VCI) paper into the packing.
- Store the machine in its normal position, not upside down or on its side.
- If the machine is stored for 1 year or more, rotate the bearings once a month to change the position of the roller balls in the bearings. Consult Atlas Copco Service.

5 Maintenance

5.1 Gas engine maintenance

Consult the engine “Owner’s manual”.

5.2 Preventive maintenance schedule

	The schedule contains a summary of the maintenance instructions. Read the respective section before taking maintenance measures. When servicing, replace all disengaged packing components, e.g. gaskets, O-rings, washers. **The “longer interval” checks must also include the “shorter interval” checks.**

Interval	Operation
Daily/8 Hours	Check lubricant levels several minutes after stopping. Drain and replace contaminated lubricant.
	Drain moisture from the receiver tank, drop legs, and air traps. (If subject to freezing, store in heated area first to remove ice.)
	Visually inspect the compressor and safety guards.
	Check for unusual noise or vibration.
	Check for lubricant leaks.
	Check pressurized components for rust, cracks, or leaks.
Weekly/40 Hours	Manually operate the pressure relief valves.
	Clean cooling surfaces of the intercooler, aftercooler, and compressor.
	Check for air leaks in the compressor and air distribution system.
	Clean or replace the air intake filter. (Use a shorter interval in humid/dirty conditions.)
Initial 100 Hours	Completely drain lubricant from the crankcase and replace.
Monthly/160 Hours	Check the belt tension.
3 Months/500 Hours	Change the lubricant. (Use a shorter interval in harsh conditions.)
	Torque the pulley clamp screws or jamnut.
6 Months/1000 Hours	Retorque the cylinder to the head capscrews.
	Inspect the compressor valves for leakage or carbon build-up. If necessary, clean with a safety solvent.
12 Months/2000 Hours	Inspect the pressure switch diaphragm and contacts.
	Inspect the contact points in the motor/starter.

5.3 Lubrication of compressors

It is strongly recommended to use the Piston Fluid compressor oil to keep the compressor in excellent operating condition.

Traditional lubricants cannot cope with the extreme conditions of piston compressors, resulting in fast oil degradation, overheating and potentially irreversible damage and high repair costs. Therefore, high performing lubricants increase the equipment lifetime.

Considering the low oil content in piston compressors, the economy of lesser quality oils simply is not worth the risk.

Piston Fluid oil can be ordered in different quantities.

5.4 Service kits

Kit	CR 5	CR 7.5	CR 10	CR 15
1 Year Maintenance Kit	2022101700	2022101700	2022101800	—
Overhaul Kit	2022100300	2022100500	2022100700	2022155201 (w/head unloaders)
Gasket Set	2022106702	2022106800	2022106900	2022104800
Intercooler Repair Kit	—	—	2023501682	—
Head Kit	—	—	—	2022154601 2022154801 (w/head unloaders)

Notes:



1. Use only authorized parts. Any damage or malfunction caused by the use of unauthorized parts is not covered by Warranty or Product Liability.
2. Whichever interval comes first. The local Sales Company may overrule the maintenance schedule, especially the service intervals, depending upon the environmental and working conditions of the compressor.
3. For the contents of all kits, consult the Parts list.

5.5 Disposal of used material

Used filters or any other used material (e.g. desiccant, lubricants, cleaning rags, machine parts, etc.) must be disposed of in an environmentally friendly and safe manner, and in line with the local recommendations and environmental legislation.

6 Servicing and adjustment procedures

Warning

⚠	Release the pressure from the compressor before starting repair or maintenance works. Switch off the voltage and isolate the compressor from the mains.

6.1 Air filter

To replace the air filter, follow these steps:

1. Stop the compressor.
2. Unscrew the cap on top of the cover. Lift off the cover and the filter element. Take care that no dirt drops inside the suction silencer.
3. Using a damp cloth, clean the filter chamber and cover. Discard damaged elements.
4. Install the new element, cover and cap.

6.2 Adjustment of MDR4 pressure switch

Views of air pressure switch MDR4

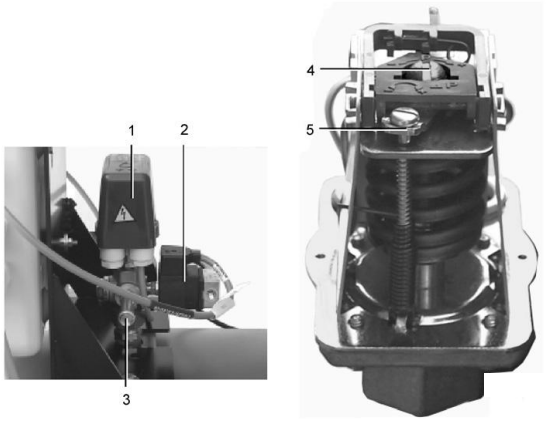

Ref	Name
1	Air pressure switch
2	Solenoid valve
3	Pressure release valve
4	Adjusting screw, stopping pressure
5	Adjusting screw, pressure difference

Function

The adjustment of the maximum or stopping pressure of the compressor is effected by means of the air pressure switch. The switch also controls the pressure difference between the maximum pressure (stopping pressure) and the pressure at which compression is resumed (starting pressure).

Adjustment

	• Adjust the air pressure switch while it is pressurized. • Switch off the voltage before removing the cover of the switch; reinstall it after an adjustment has been made and before the voltage is switched on again.

The **maximum pressure** is controlled by adjusting screw (4). Turn the screw clockwise to raise the maximum or stopping pressure, counter-clockwise to lower it.

The **pressure difference** is adjusted by means of screw (5). To reduce the difference between the stopping and starting pressures, i.e. to increase the starting pressure, turn the screw counter-clockwise. To increase the pressure difference, turn the screw clockwise.

6.3 Adjustment of MDR3 pressure switch

Views of air pressure switch MDR3 with ON/OFF switch

This pressure switch has a cover with rotary knob (4) for manual On/Off (Auto/Off).

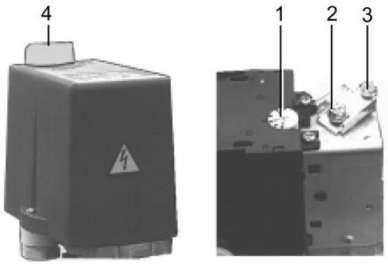

Reference	Description
1	Dial, overload relay
2	Adjusting screw, stopping pressure
3	Adjusting screw, pressure difference
4	On/off switch (Auto/Off)

Function

The switch allows the operator to select the stopping pressure and the pressure difference between stopping and starting pressures. The stopping and starting pressures are the opening and closing pressures of the switch.

Adjustment

	• Adjust the air pressure switch while it is pressurized. • Switch off the voltage before removing the cover of the switch; reinstall it after an adjustment has been made and before the voltage is switched on again.

The stopping pressure is controlled by adjusting screw (2). Turn the screw clockwise to raise the stopping pressure, counter-clockwise to lower it.

The pressure difference between starting and stopping is adjusted by means of adjusting screw (3). The adjustment range is shown in the graph below. Turn the screw counter-clockwise to reduce the pressure difference, clockwise to increase it.

6.4 Adjustment of pilot valve

The adjustment of the maximum or unloading pressure of the compressor is effected by means of pilot valve. The valve also controls the difference between the preset maximum pressure and that at which compression is resumed.

Pilot valve

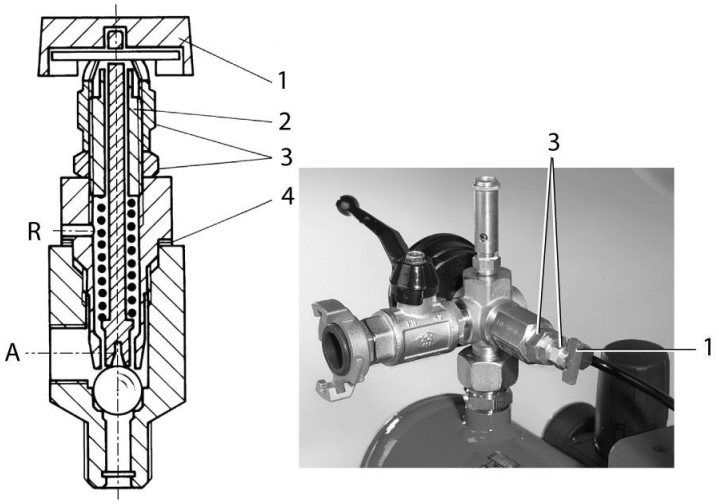

Reference	Description
A	Control air to unloader
R	Vent hole
1	Unloading handle
2	Pressure adjusting screw
3	Nuts
4	Shims

Unload mechanism

The pilot valve is equipped with a hand-operated unload mechanism: by turning the red handle (1) 90 degrees, the plunger of the valve will be lifted, releasing the spring force. The air pressure from the pulsation dampers will force down unloader plunger (8) and the compressor will run unloaded. By turning handle (1) 90 degrees further, the plunger returns to its original position so that the pilot valve will again unload and load the compressor at the pre-set pressures.

Setting of the pilot valve

The maximum pressure is controlled by adjusting screw (2):
1. Loosen handle (1) and the two nuts (3).
2. Turn the adjusting screw (2) clockwise to increase the maximum pressure.
3. The pressure difference can be increased by removing one or more shims (4).
4. Fit the two nuts (3) and handle (1) in their original position.

6.5 Pressure relief valve

	Replace the valve if it does not open at the correct pressure. No adjustment is allowed. **Testing:** Testing as described below shall only be carried out by competent personnel.
	If pressure relief valve is not used for longer than 6 months, pressurize for 4h to have working pressure.

Testing

1. Close the air outlet valve, depressurize and disconnect the hose or pipe from the valve.
2. Start the compressor and run it until it stops automatically.
3. Switch off the voltage.
   Remove the cover from the air pressure switch and, with the air receiver now under pressure, turn the adjusting screw one turn clockwise to increase the stopping pressure Adjustment of MDR4S pressure switch and Adjustment of MRD3 pressure switch. Reinstall the cover.
4. Switch on the voltage, slightly open the outlet valve and start the compressor.
5. Gradually close the outlet valve while checking the air pressure gauge. If the pressure relief valve has not opened at the pressure specified in Compressor data, it must be replaced by a new one. If the compressor unloads before the specified opening pressure is reached, repeat the procedure as mentioned from step 3.
6. Readjust the unloading pressure as described in sections Adjustment of MDR4S pressure switch and Adjustment of MRD3 pressure switch.
7. Reconnect the hose or pipe to the closed air outlet valve.

Testing on Contractor units

1. Close the air outlet valves, depressurize and disconnect the hoses from the valves.
2. Loosen the red handle of the pilot valve (1) and the two nuts (3).
3. Open outlet valve a fraction. Start the compressor.
4. Gradually turn adjusting screw (2) clockwise while checking pressure gauge. If the pressure relief valve has not opened at the pressure specified in Compressor data, it must be replaced by a new one.
5. Readjust the normal working pressure after testing. Consult section Adjustment of pilot valve.
6. Fit nuts (3) and handle (1) in their original positions.

7 Problem solving

Condition	Fault
Low discharge pressure	Restricted inlet
	Defective compressor valves or valve unloading mechanism
	Leaks in the compressed air distribution system at fittings, connections, etc.
	Unloader pilot valve defective or set wrong
	Pressure switch defective or set wrong
	Drive belt slipping
	Incorrect speed
	Worn piston rings or loose piston
	Leaking head gasket
	Drain valve open
	Defective pressure gauge
	Pressure relief valve leaking
	Clogged intercooler
	Compressor incorrectly sized for the altitude it is operating at
	Piston rings not seated; allow 100 hours at full pressure
Water in the crankcase (lubricant appears milky)	Compressor does not run long enough to get hot and vaporize the liquids squeezed out of the air during compression (compressor may be too large for application)
	Incorrect or inferior grade of lubricant
	System pressure leaking back through discharge valve
Rusty valves and/or cylinders	Compressor operated too infrequently
	Compressor does not run long enough to get hot and vaporize the liquids squeezed out of the air during compression (compressor may be too large for application)
	Compressor not properly prepared for storage
	Discharge line from compressor head is pointed upward allowing condensation to drain back at shutdown
Excessive vibration	Incorrect speed
	Compressor valves not functioning properly
	Loose pulley/sheave
	Compressor, motor or engine not secured tightly, or tightened into a bind
	Foundation or frame inadequate
	Piping inadequately supported or tightened into a bind
	Excessive discharge pressure
	Compressor feet may need to be leveled with shims
Excessive drive belt wear	Pulley/sheave out of alignment
	Belt too loose or too tight
	Belt slipping
	Pulley/sheave wobbling
	Pulley/sheave groove damaged or rough
	Incorrect belts

Condition	Fault
Low oil pressure	Oil sump strainer plugged
	Excessive leakage at crankshaft seals
	Low oil level
	Oil pump incorrectly assembled to the bearing carrier (“o” ring not properly located between oil pump body & bearing carrier)
	Oil pressure adjusting screw not set properly
	Defective oil pressure gauge
Compressor loads and unloads excessively	Air receiver too small
	Compressor valves or unloaders defective
	Excessive system leakage
	Compressor operating at incorrect speed
	Unloader pilot differential set too close
	Pressure switch defective
Defective pressure switch	Moisture and/or oil build-up on the pressure switch diaphragm
	Ruptured diaphragm
	Burned contact points
	Plugged air passage from the receiver to the pressure switch
	Loose electrical connection
Excessive air pressure in air receiver	Air pressure gauge inaccurate
	Leaks in unloader piping system
	Defective compressor head unloader
	Pilot valve or pressure switch set incorrectly or defective
	Pressure switch wired incorrectly
	Tube to compressor head unloader plugged
Excessive intercooler pressure	Intercooler restricted or plugged
	Compressor valves in second stage broken or not functioning properly
	Pilot valve or pressure switch set incorrectly or defective
Intercooler pressure	Compressor valves or head unloaders in first stage not functioning abnormally low properly or defective
	Restricted air inlet filter or suction line
	Pilot valve or pressure switch set incorrectly or defective
	Pressurized air at head unloader not venting properly when demand for air is required
	Compressor valve or head gasket leaking
	Worn piston rings
	Leaking air at intercooler or intercooler connections
Compressor overheats	Clogged intake system
	Defective compressor valves
	Pressure setting too high
	Clogged intercooler, internally or externally
	Inadequate ventilation, or recirculation of hot air
	Pulley/sheave rotation wrong
	Incorrect speed
	Lubrication inadequate
	Compressor incorrectly sized

Condition	Fault
High discharge temperature	Compressor valve assemblies defective
	Discharge pressure too high
	Inadequate ventilation or hot air recirculating
	Cooling surfaces of compressor or intercooler excessively dirty
	Ambient temperature too high
	Scored or excessively worn cylinder walls
Compressor knocks	Head clearance insufficient
	Piston loose in cylinder bore, cylinder bore worn, piston or piston rings worn
	Worn rods or main bearing
	Wrong pressure setting, discharge pressure excessive
	Crankcase lubrication inadequate
	Loose pulley/sheave
Excessive oil consumption	Compressor runs unloaded too long
	Worn piston rings
	Restricted intake system
	Compressor running too hot
	Breather valve not functioning properly
	Oil level in crankcase too high
	Oil viscosity wrong for the application
	Connecting rod out of alignment, bent or twisted
	Leaking oil seal
	Piston rings not seated (allow 100 hours for seating)
	Wrong oil (may be a detergent oil with a tendency to foam)
	Inferior grade of oil
Excessive current draw *(To determine maximum amperage allowed, multiply the FLA on the motor nameplate by the service factor.)* **CAUTION ! Motor surface temperature normally exceeds 170° F.**	Low voltage (must be within 10% of nameplate voltage)
	Loose electrical connection
	Wire size too small
	Incorrect oil
	Discharge pressure too high
	Intercooler plugging
	Bearings tight or seizing
	No crankshaft endplay
	Motor sized incorrectly
	Motor defective
	Drive belts too tight
Failure to start **CAUTION! Overload relays are designed to protect the motor from damage due to motor overload. If the overload relay trips persistently, DO NOT CONTINUE TO PUSH THE RESET BUTTON! Contact your local Quincy distributor for assistance.**	Power not on
	Blown circuit fuse
	Overload relay tripped
	Low voltage
	Faulty start switch
	Power failure
	Pressure switch incorrectly adjusted or faulty
	Loose or broken wire
	Motor defective
	Compressor seized
Motor stalls	Motor overloaded

8 Technical data

8.1 Reference conditions

Inlet pressure (absolute)	psi	14.5
Relative air humidity	%	0
Air inlet temperature	ºF	68
Working pressure:	psi	145-175*

* 145 psi for single stage units, 175 for two-stage units

8.2 Limitations

Minimum inlet temperature	°F	32
Maximum inlet temperature	ºF	104
Maximum working pressure	psi	See below
Only applicable for Full Feature variants. (with refrigerant dryer)		
Minimum ambient air temperature	°F	41

8.3 Compressor data

Compressor Data		**CRC10**	**CRC15**	**CRC20**	**CRP20**	**CRI5**	**CRI7.5**	**CRI10**	**CRI15**
Compressor shaft speed	RPM	1425	1117	941	1028	942	1026	968	923
Motor HP	HP	2	3	5	5	5	7.5	10	15
Motor shaft speed	RPM	3450	3450	3450	3450	1750	1750	1750	1750
Max working pressure	Psig	145	145	145	175	175	175	175	175
FAD @MWP	CFM	4.1	7.6	9.5	14.5	17.2	22.6	35	51
FAD @90psig	CFM	4.9	9.1	11.4	15.1	17.9	23.5	36.4	53
Power input @MWP	HP	2.4	3.9	5.3	6.8	6.6	8.6	12.1	18.8
Oil capacity	Gal	0.06	0.12	0.17	0.211	0.475	0.475	0.625	1
Noise level @MWP	dBA	84	86	87	83	81	82	83	83

9 Instructions for use

Air receiver (tank-mounted units)

1	**Corrosion must be prevented: depending on the conditions of use, condensate may accumulate inside the tank and must be drained every day.** This may be done manually, by opening the drain valve, or by means of the automatic drain, if fitted to the tank. Nevertheless, a weekly check of correct functioning of the automatic valve is needed. This has to be done by opening the manual drain valve and checking for condensate.
2	Periodical service inspection of the air receiver is needed, as internal corrosion can reduce the steel wall thickness with the consequent risk of bursting. Local rules need to be respected, if applicable. The use of the air receiver is forbidden once the wall thickness reaches the minimum value as indicated in the service manual of the air receiver (part of the documentation delivered with the unit).
3	Lifetime of the air receiver mainly depends on the working environment. Avoid installing the compressor in a dirty and corrosive environment, as this can reduce the vessel lifetime dramatically.
4	Do not anchor the vessel or attached components directly to the ground or fixed structures. Fit the pressure vessel with vibration dampers to avoid possible fatigue failure caused by vibration of the vessel during use.
5	Use the vessel within the pressure and temperature limits stated on the nameplate and the testing report.
6	No alterations must be made to this vessel by welding, drilling or other mechanical methods.

ATLAS COPCO
STANDARD TERMS AND CONDITIONS

LEGAL EFFECT: Except as expressly otherwise agreed to in writing by an authorized representative of Seller, the following terms and conditions shall apply to and form a part of this order and any additional and/or different terms of Buyer's purchase order or other form of acceptance are rejected in advance and shall not become a part of this order.

The rights of Buyer hereunder shall be neither assignable nor transferable except with the written consent of Seller.

This order may not be canceled or altered except with the written consent of Seller and upon terms which will indemnify Seller against all loss occasioned thereby. All additional costs incurred by Seller due to changes in design or specifications, modification of this order or revision of product must be paid for by Buyer.

In addition to the rights and remedies conferred upon Seller by this order, Seller shall have all rights and remedies conferred at law and in equity and shall not be required to proceed with the performance of this order if Buyer is in default in the performance of such order or of any other contract or order with seller.

TERMS OF PAYMENT: Unless otherwise specified in the order acknowledgment, the terms of payment shall be 1% 15, net forty-five (45) days after shipment. These terms shall apply to partial as well as complete shipments. If any proceeding be initiated by or against Buyer under any bankruptcy or insolvency law, or in the judgment of Seller the financial condition of Buyer, at the time the equipment is ready for shipment, does not justify the terms of payment specified, Seller reserves the right to require full payment in cash prior to making shipment. If such payment is not received within fifteen (15) days after notification of readiness for shipment, Seller may cancel the order as to any unshipped item and require payment of its reasonable cancellation charges.

If Buyer delays shipment, payments based on date of shipment shall become due as of the date when ready for shipment. If Buyer delays completion of manufacture, Seller may elect to require payment according to percentage of completion. Equipment held for Buyer shall be at Buyer's risk and storage charges may be applied at the discretion of Seller.

Accounts past due shall bear interest at the highest rate lawful to contract for but if there is no limit set by law, such interest shall be eighteen percent (18%). Buyer shall pay all cost and expenses, including reasonable attorney's fees, incurred in collecting the same, and no claim, except claims within Seller's warranty of material or workmanship, as stated below, will be recognized unless delivered in writing to Seller within thirty (30) days after date of shipment.

TAXES: All prices exclude present and future sales, use, occupation, license, excise, and other taxes in respect of manufacture, sales or delivery, all of which shall be paid by Buyer unless included in the purchase price at the proper rate or a proper exemption certificate is furnished.

ACCEPTANCE: All offers to purchase, quotations and contracts of sales are subject to final acceptance by an authorized representative at Seller's plant.

DELIVERY: Except as otherwise specified in this quotation, delivery will be F. O. B. point of shipment. In the absence of exact shipping instruction, Seller will use its discretion regarding best means of insured shipment. No liability will be accepted by Seller for so doing. All transportation charges are at Buyer's expense. Time of delivery is an estimate only and is based upon the receipt of all information and necessary approvals. The shipping schedule shall not be construed to limit seller in making commitments for materials or in fabricating articles under this order in accordance with Seller's normal and reasonable production schedules.

Seller shall in no event be liable for delays caused by fires, acts of God, strikes, labor difficulties, acts of governmental or military authorities, delays in transportation or procuring materials, or causes of any kind beyond Seller's control. No provision for liquidated damages for any cause shall apply under this order. Buyer shall accept delivery within thirty (30) days after receipt of notification of readiness for shipment. Claims for shortages will be deemed to have been waived if not made in writing with ten (10) days after the receipt of the material in respect of which any such shortage is claimed. Seller is not responsible for loss or damage in transit after having received "In Good Order" receipt from the carrier. All claims for loss or damage in transit should be made to the carrier.

TITLE & LIEN RIGHTS: The equipment shall remain personal property, regardless of how affixed to any realty or structure. Until the price (including any notes given therefore) of the equipment has been fully paid in cash, Seller shall, in the event of Buyer's default, have the right to repossess such equipment.

PATENT INFRINGEMENT: If properly notified and given an opportunity to do so with friendly assistance, Seller will defend Buyer and the ultimate user of the equipment from any actual or alleged infringement of any published United States patent by the equipment or any part thereof furnished pursuant hereto (other than parts of special design, construction, or manufacture specified by and originating with Buyer), and will pay all damages and costs awarded by competent court in any suit thus defended or of which it may have had notice and opportunity to defend as aforesaid.

STANDARD WARRANTY: Seller warrants that products of its own manufacture will be free from defects in workmanship and materials under normal use and service for the period specified in the product instruction manual. Warranty for service parts will be Ninety (90) days from date of factory shipment. Electric Motors, gasoline and diesel engines, electrical apparatus and all other accessories, components and parts not manufactured by Seller are warranted only to the extent of the original manufacturer's warranty.

Notice of the alleged defect must be given to the Seller, in writing with all identifying details including serial number, type of equipment and date of purchase within thirty (30) days of the discovery of the same during the warranty period.

Seller's sole obligation on this warranty shall be, at its option, to repair or replace or refund the purchase price of any product or part thereof which proves to be defective. If requested by Seller, such product or part thereof must be promptly returned to seller, freight prepaid, for inspection.

Seller warrants repaired or replaced parts of its own manufacture against defects in materials and workmanship under normal use and service for ninety (90) days or for the remainder of the warranty on the product being repaired.

This warranty shall not apply and Seller shall not be responsible or liable for:

(a) Consequential, collateral or special losses or damages;

(b) Equipment conditions caused by fair wear and tear, abnormal conditions of use, accident, neglect or misuse of equipment, improper storage or damage resulting during shipping;

(c) Deviation from operating instructions, specifications or other special terms of sale;

(d) Labor charges, loss or damage resulting from improper operation, maintenance or repairs made by person(s) other than Seller or Seller's authorized service station.

In no event shall Seller be liable for any claims whether arising from breach of contract or warranty or claims of negligence or negligent manufacture in excess of the purchase price.

THIS WARRANTY IS THE SOLE WARRANTY OF SELLER AND ANY OTHER WARRANTIES, WHETHER EXPRESS OR IMPLIED IN LAW OR IMPLIED IN FACT, INCLUDING ANY WARRANTIES OF MERCHANTABILITY AND FITNESS FOR PARTICULAR USE ARE HEREBY SPECIFICALLY EXCLUDED.

LIABILITY LIMITATIONS: Under no circumstances shall the Seller have any liability for liquidated damages or for collateral, consequential or special damages or for loss of profits, or for actual losses or for loss of production or progress of construction, whether resulting from delays in delivery or performance, breach of warranty, negligent manufacture or otherwise.

ENVIRONMENTAL AND OSHA REQUIREMENTS: At the time of shipment of the equipment from the factory, Atlas Copco will comply with the various Federal, State and local laws and regulations concerning occupational health and safety and pollution. However, in the installation and operation of the equipment and other matters over which the seller has no control, the Seller assumes no responsibility for compliance with those laws and regulations, whether by the way of indemnity, warranty or otherwise.

June 30, 2003



In order to be First in Mind-First in Choice® for all your quality compressed air needs, Atlas Copco delivers the products and services that help to increase your business' efficiency and profitability.

Atlas Copco's pursuit of innovation never ceases, driven by our need for reliability and efficiency. Always working with you, we are committed to providing you the customized quality air solution that is the driving force behind your business.

No. 2022 2096 26 / 2019 - 02 - Printed in U.S.A.

Atlas Copco

www.atlascopco.com

Ed	Position	Description	Date	Intr./Appd.
01		DRAWING RELEASED	08/18	BJW

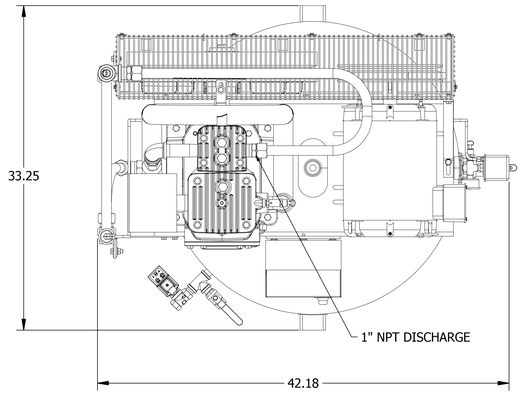

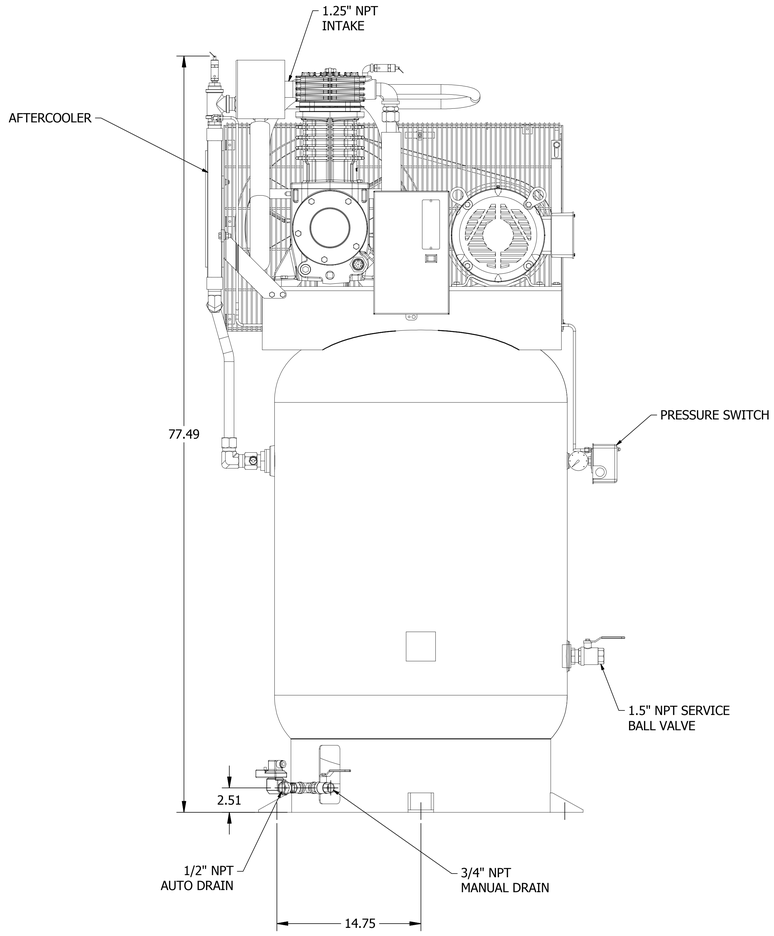

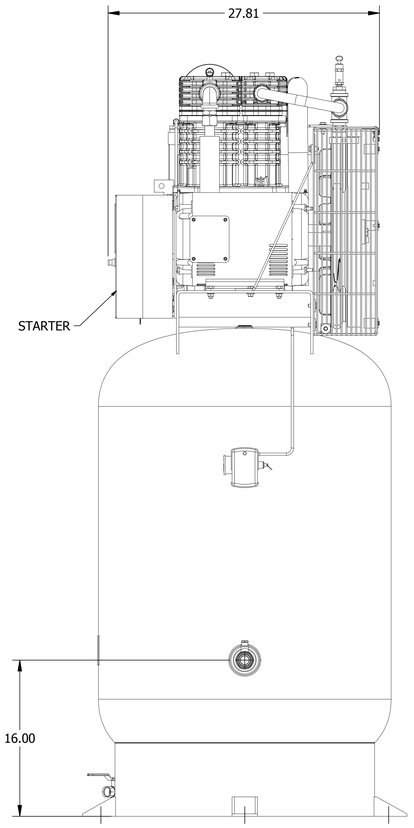

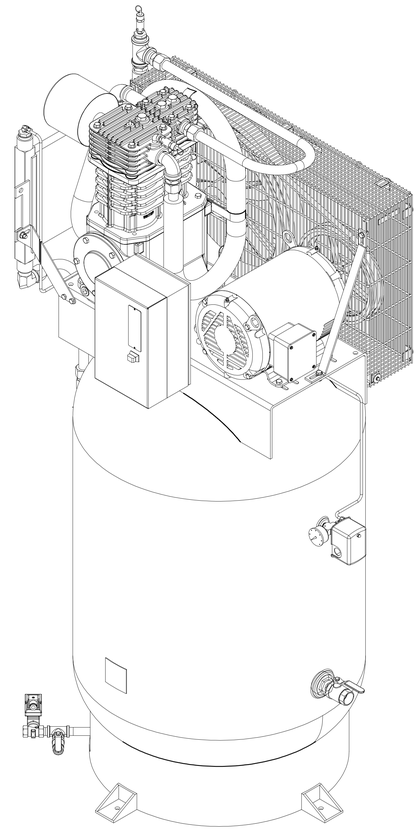

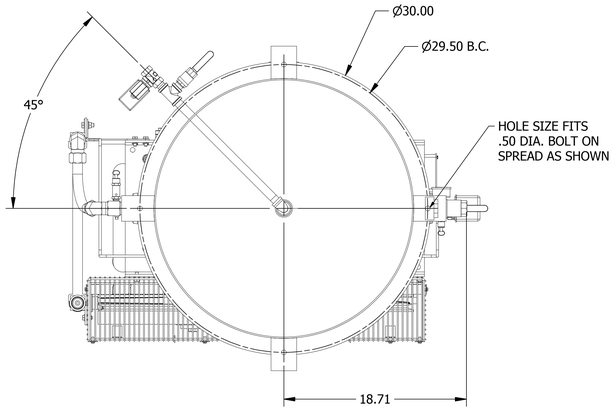

NOTES:

1) ALL DIMENSIONS GIVEN IN INCHES.
2) ALLOW A MINIMUM OF 12 INCHES ON ALL SIDES FOR SERVICE AND COOLING.
3) NEMA 4 STARTER SHIPPED LOOSE.

Name	DRAWING,DIM,CR10-TS-120V-PPS				Confidentiality Class acc. to 2012203718
Material	Not Applicable				Internal
Finish	Not Applicable				INV
Scale 1/6		Family	E	Similar to	Drawing owner UTY
Drawn by utymcobar		Make From		Replaces	
Version Drwg	Blank wt lb	Fini wt. 0 lb		Designation	Sheet 1 / 1
Date checked.	Prod checked.	Approved.	Date 8/14/2018		2022035041

Dimensions and tolerances in accordance with ASME Y14.5M-1994
Unless otherwise specified all dimensions are in inches primary, mm secondary.

TOLERANCES ON ANGLES	±
TOLERANCES ON 2 PLANES DIM'S	±
TOLERANCES ON 3 PLANES DIM'S	±
FINISH ON MACHINED SURFACES	√

Atlas Copco

STATUS: Approved Internal

Parent 3D model	Ed . Version 3D
2022035040	

All materials supplied are in compliance with the requirements of the List of Prohibited Substances

CONFIDENTIAL:
This document is our property and shall not without our permission be altered, copied, used for manufacturing or communicated to any other person or company.



Refrigerant air dryers

FD VSD 100-300, FD 5-95 and FX 5-300
(5-300 l/s/11-636 cfm)



Why dry your compressed air?

Compressed air contains oil, solid particles and water vapors. It is the inherent result of the compression process, which concentrates the natural water vapors and particles in the air that surrounds us. This untreated compressed air poses a substantial risk to your air system and end products. Its moisture content alone can cause corrosion in pipe work, premature failure of pneumatic equipment, product spoilage and more. An air dryer is therefore essential to protect your systems and processes.

Refrigerant dryers by Atlas Copco

Atlas Copco's refrigerant dryers provide the clean, dry air you need to expand the life of your equipment and ensure the quality of your products. Our FD and FX dryers are designed in-house and tested using the most stringent methods. They meet or exceed the international standards for compressed air purity and are tested according to ISO 7183:2007.

FX 5-300
Quality Performance

- Available in 16 sizes from 6 to 300 l/s/15 to 636 cfm.
- Pressure dew point as low as +3°C/+37.4°F.
- Electronic no-loss drain with safety function.
- Controller with pressure dew point display.
- Easy installation.
- Minimal maintenance.

FD 5-95
First-Rate Efficiency

- Available in 11 sizes from 6 to 95 l/s/13 to 201 cfm.
- Pressure dew point as low as +3°C/+37.4°F.
- Electronic no loss drain with safety function.
- Controller with pressure dew point display, energy saving option, alarm contacts, …
- Quiet operation.
- Constant purity class -;4 - according ISO 8573-1:2010.

FD VSD 100-300
Unrivalled Energy Savings

- Available in 6 sizes from 100 to 300 l/s/212 to 636 cfm.
- Supreme energy savings: up to 50% on indirect energy costs and up to 70% on direct energy costs.
- Low pressure drop, typically below 0.2 bar/2.9 psi.
- Pressure dew point as low as +3°C/+37.4°F.
- Advanced touchscreen controller: visualization, alarm history, remote control,…
- All-in-one design with very small footprint.
- Delivered ready for use.
- Quiet operation.
- Constant purity class -;4;- according ISO 8573-1:2010.

VSD

Extending your VSD energy savings to your quality air

The introduction of Atlas Copco's VSD (and later VSD+) compressor technology was an industry milestone. By automatically adjusting its motor speed as air demand fluctuates depending on production flow or time, a VSD compressor offers double digit reductions in energy use and in lifecycle costs. With the FD VSD, Atlas Copco is extending this energy-saving principle to your quality air equipment.

FD VSD 100-300:
Unrivalled Energy Savings



1

VSD inverter

Controls the speed of the compressor to match your air demand and ensure the highest possible energy savings.

2

High-efficiency heat exchanger

Counter-flow compact brazed plate or aluminum heat exchanger, with air-to-air side for optimum cooling efficiency and the lowest possible pressure drop.

3

Integrated water separator

Low velocity with high separation efficiency, even in low flow conditions.

4

Electronic no-loss condensate drain

Opens the drain only when needed to eliminate unnecessary loss of compressed air during timed draining.

5

Elektronikon® Touch controller

Provides advanced control and allows for remote monitoring.

6

Single electrical connection

Ensures plug-and-play installation.



VSD for superior energy savings

Atlas Copco's in-house developed VSD technology matches your FD dryer's power consumption to your production's actual air flow. While a traditional refrigerant dryer can only be turned on or off, Atlas Copco's FD VSD mirrors your production's demand for compressed air as it fluctuates during the day, week or year. This ensures supreme energy savings as well as a stable dew point.

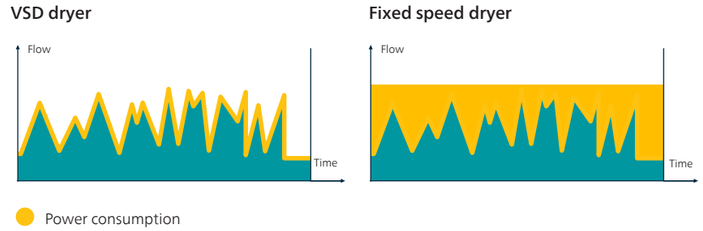

Minimal environmental impact

FD VSD dryers use the CFC-free R410A refrigerant, which has an ozone depletion potential (ODP) of zero. The refrigerant meets the strict F-Gas regulations and, due to its low power consumption, has an an outstanding TEWI (Total Equivalent Warming Impact) performance.

Optimum performance and safety in all conditions

- Hot gas bypass valve prevents freezing at lower loads.
- The extremely reliable R410A rotary compressor provides the best performance with minimum environmental impact. Capillary tubes cope with all conditions – no moving parts for extra reliability.
- Condenser with louvered fin technology for improved performance in dusty environments.

Advanced remote monitoring and control

- High-tech Elektronikon® Touch controller with warning indications, dryer shutdown and maintenance scheduling.
- Standard SMARTLINK remote monitoring to maximize air system performance and energy savings.

Robust and compact design

- Forklift opening for smooth transport.
- Easy front and side panel access.
- No bulky thermal mass heat exchanger needed to save on energy.

Filters

If your production requires higher levels of air quality and filtration, UD+ filters can be added on to your FD VSD dryer.

FD 5-95:
First-Rate Efficiency





1

Low-noise compressor with liquid separator

Lasts longer thanks to limited vibrations, minimal moving parts, and reduced risk of leakage.

2

High-efficiency heat exchanger

Counter-flow compact brazed plate or aluminum heat exchanger, with air-to-air side for optimum cooling efficiency and the lowest possible pressure drop.

3

Integrated water separator

Low velocity with high separation efficiency even in low flow conditions.

4

Electronic no-loss condensate drain

With level sensor, backup manual drain and drain alarm.

6

Hot gas bypass valve

Ensures stable pressure dew point and prevents freezing at lower loads.

5

Fan switch

Reduces energy consumption and optimizes the pressure dew point at very low temperatures.

7

Refrigerant separator

Eliminates the chance of moisture entering the compressed air system.

8

Single electrical connection

Allows for plug-and-play installation.

Supreme energy efficiency

- The FD offers a low pressure drop – typically below 0.2 bar/2.9 psi – and minimal energy consumption.
- The compact brazed plate or aluminum heat exchanger was designed specifically to provide optimal pre-cooling and the lowest possible pressure drop.
- The electronic no-loss condensate drain comes with a level sensor to open the drain only when needed, preventing unnecessary loss of compressed air.

Comprehensive control and monitoring options

- The Elektronikon® Alpha controller displays the pressure dew point and relative humidity.
- Remote alarm and start/stop control through voltage-free contact.
- Additional features such as alarm history and standard remote visualization.

Easy installation and long maintenance intervals

- Small footprint thanks to an innovative all-in-one design.
- Delivered ready for use, minimizing costly production downtime.

Low environmental impact

FD dryers use CFC-free refrigerants (R134A and R410A) with an ozone depletion potential (ODP) of zero.

Reliable performance in tough conditions

- Hot gas bypass valve prevents freezing at lower loads.
- R134A piston compressor with high coefficient of performance (extremely reliable R410A rotary compressor for models FD 60-FD 95) provides the best performance with minimum environmental impact. Capillary tubes cope with all conditions – no moving parts for extra reliability.
- Condenser with louvered fin technology for improved performance in dusty environments.

FX 5-300: Quality Performance



1

Refrigerant separator

No chance of moisture entering the compressed air system.

2

Hot gas bypass

Ensures stable pressure dew point and eliminates the possibility of condensate freezing.

3

Digital display

Provides peace of mind through precise monitoring of pressure dew point.



4

Single electrical connection

Allows for plug-and-play installation.

6

Water separator

Offers high efficiency for better pressure dew point.

5

Easy access to key components

For straightforward servicing.

7

Compact design

For a small footprint.

8

Low-noise rotary compressor with integrated liquid separator

Lasts longer thanks to limited vibrations, minimal moving parts, and reduced risk of leakage.



Pressure dew point precision

The FX comes in a wide range of sizes (6-300 l/s or 13 -636 cfm) to offer a steady pressure dew point as low as +3°C/+37.4°F. Its easy to use digital display precision-measures and monitors the pressure dew point and dryer performance.

Digital display

- Pressure dew point: exact measurement and visual monitoring.
- Status: refrigerant compressor and fan.
- Alarms: high/low pressure dew point and probe failure.
- Service warning.

Reliable

Built according to the stringent Atlas Copco standards, the FX is made of high quality, generously sized components.

Hot environments

High ambient temperatures can put your equipment to the test. The FX range offers several high temperature models that ensure dependable performance in conditions up to 46°C/115°F.

Significant cost savings

- Increased reliability and lifetime of tools and equipment.
- Reduced pipe work leaks and thus a lower energy bill.
- Less equipment breakdowns and operational interruptions.
- Minimal chance of product damage as a result of moisture carryover.

Sustainable refrigerant

The FX range comes with refrigerant that is compliant with F-Gas regulations to ensure the lowest possible carbon footprint and energy consumption.

VSD:
a game-changer in energy savings

When purchasing a refrigerant dryer, the main focus is usually on the initial cost. However, this only represents approximately 10% of the lifecycle cost of the dryer. Energy, maintenance and installation make up the bulk of your actual dryer costs. Direct and indirect (pressure drop) energy costs are the most important.

Indirect energy costs

Indirect energy costs are related to the extra energy your air compressor must consume to overcome the pressure drop that takes place in the air dryer. By design, Atlas Copco FD VSD dryers offer a low pressure drop and efficient heat transfer – both of which contribute to a reduction of the indirect energy costs.

Low pressure drop

If a refrigerant dryer has a high internal pressure drop, the compressor needs to run at a higher pressure. This wastes energy and increases operating costs. Atlas Copco has designed our refrigerant dryers to minimize pressure drop. A pressure drop typically below 0.2 bar/2.9 psi at full flow is ensured by the heat exchanger technology, an integrated low velocity water separator, and generously sized components.

Efficient heat exchanger technology

Atlas Copco's refrigerant dryers use a counter flow heat exchanger on both the air-to-air and air-to-refrigerant side. Compared to a cross flow heat exchanger, the counter flow design results in a more efficient heat transfer and stable temperatures. This significantly lowers energy consumption.

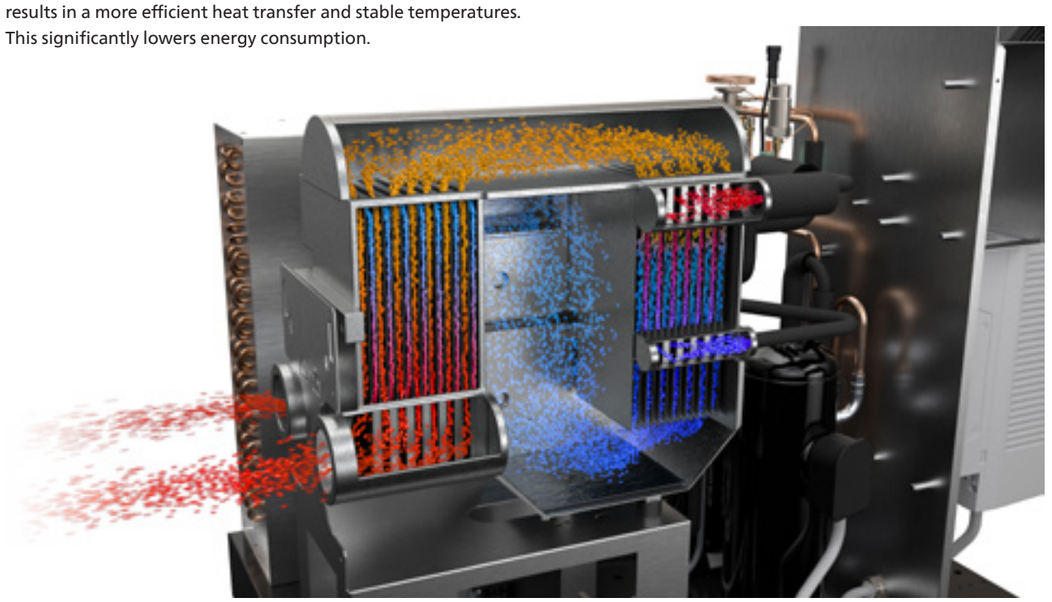

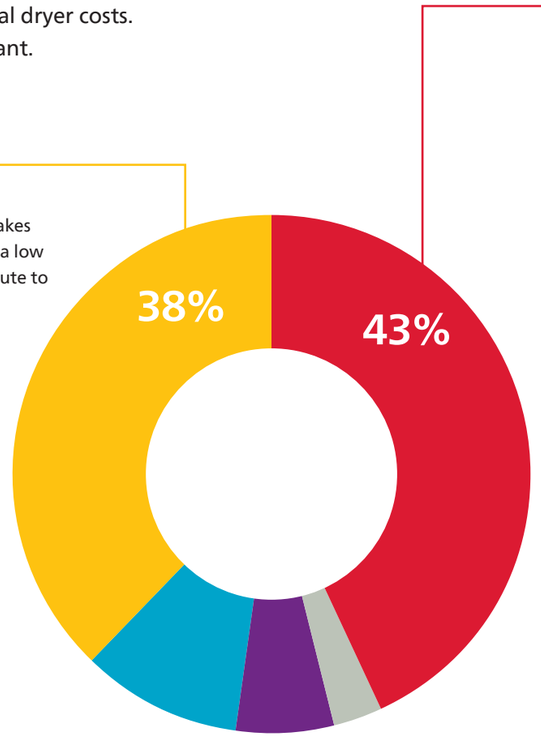

Lifecycle cost

- Direct energy costs
- Indirect energy costs
- Investment
- Maintenance
- Installation

Direct energy costs

Direct energy costs are related to the power that the dryer consumes. Atlas Copco's FD VSD dryers match their energy usage to the actual compressed air demand. This reduces energy consumption by as much as 70% compared to conventional dryers.

Reduce your total lifecycle cost by up to 50% with Atlas Copco's VSD dryers

- Up to 50% savings on indirect energy costs
- Up to 70% savings on direct energy costs

VSD outperforms thermal mass technology

Many conventional dryers rely on thermal mass technology to reduce energy costs. Also called cycling dryers, these units come with thermal mass storage which can be used to dry the air with the dryer's compressor temporarily switched off. While thermal mass technology certainly generates energy savings, these are offset by the additional energy these dryers require to cool the thermal mass. In addition, as the refrigerant compressor's operation is controlled by the thermal mass, the compressed air dew point rises and falls significantly. This can compromise your air quality by up to 2 purity classes. Finally, thermal mass dryers offer only limited or no energy savings in environments with high ambient temperatures. VSD technology has proven to deliver superior results in terms of energy use, dew point stability and service costs.

**Thermal mass:
some energy savings and unstable dew point**

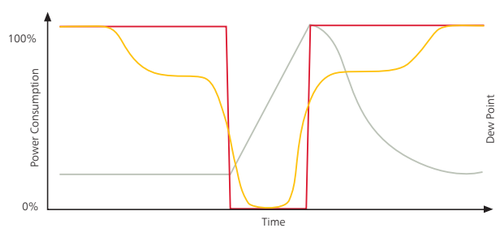

**VSD:
superior energy savings and stable dew point**

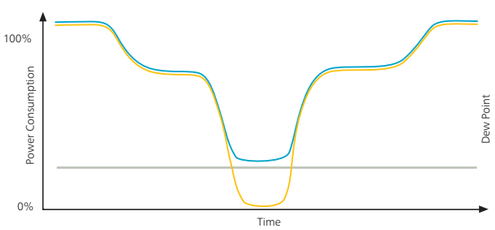

Flow · Power Consumption thermal mass · Power Consumption VSD · Dew point

Advanced control

Atlas Copco's refrigerant dryers are built to reliably and efficiently deliver quality air. But in the end, it's all about how they perform on your work floor, meeting your individual needs and responding to your specific conditions. That is why the FD VSD, FD and FX come with comprehensive control options to allow you to get the best performance from your Atlas Copco dryer.



FD VSD 100-300: Elektronikon® Touch controller

- 4.3-inch high-definition color display with clear pictograms and service indicator.
- Internet-based dryer visualization using a simple Ethernet connection.
- Automatic restart after voltage failure.
- Built-in SMARTLINK online monitoring.
- More flexibility: four different week schedules.
- Graphical service plan indication.
- Remote control and connectivity functions.

FD 5-95: Elektronikon® Alpha controller

- Exact measurement and visual monitoring of pressure dew point and ambient temperature.
- High/low pressure dew point alarm.
- Relative humidity indicator.
- Energy saving mode.
- Switch off at freezing alarm.
- Alarm history and standard remote visualization.





FX 5-300: Digital display

- Pressure dew point: exact measurement and visual monitoring.
- Energy saving mode.
- Alarms: high/low pressure dew point and probe failure.
- Service warnings.

Remote monitoring



SMARTLINK: Data Monitoring Program

SMARTLINK captures live data from your compressed air equipment and translates it in clear insights. At a glance, you can check uptime, energy efficiency and machine health.

- Remote monitoring that helps you optimize your compressed air system and save energy and costs.
- Provides a complete insight in your compressed air network.
- Anticipates potential problems by warning you upfront.
- Efficient service planning and parts handling to give you improved uptime.

SMARTLINK & Total Responsibility

Get the most out of SMARTLINK as part of a Total Responsibility Plan. Step back, relax, and let our service engineers monitor your compressed air system. We know exactly when to service your machines, diagnose any issues and be there on time to fix them.

Technical specifications FD VSD 100-300

Model	Maximum inlet conditions at full flow (ambient/ inlet)	Inlet flow with a pressure dew point of 3°C/37.4°F		Pressure drop at full flow		Power consumption		Max. working pressure		Compressed air connections	Dimensions						Weight	
											Length		Width		Height			
	°C	l/s	cfm	bar	psi	kW	hp	bar	psi		mm	in	mm	in	mm	in	kg	lb
FD 100 VSD	60	100	212	0.16	2.3	0.66	0.90	14.5	210	G 1 1/2 F (NPT for UL version)	805	31.69	962	37.87	1040	41	130	287
FD 140 VSD	60	140	297	0.11	1.6	1.04	1.41	14.5	210	G 2 F (NPT for UL version)	805	31.69	962	37.87	1040	41	130	287
FD 180 VSD	60	180	381	0.18	2.6	1.54	2.09	14.5	210	G 2 F (NPT for UL version)	805	31.69	962	37.87	1040	41	134	295
FD 220 VSD	60	220	466	0.14	2	1.77	2.41	14.5	210	G 2 1/2 F (NPT for UL version)	805	31.69	962	37.87	1040	41	143	315
FD 260 VSD	60	260	551	0.1	1.5	1.9	2.58	14.5	210	G 2 1/2 F (NPT for UL version)	805	31.69	962	37.87	1040	41	150	331
FD 300 VSD	60	300	636	0.18	2.6	2.64	3.59	14.5	210	G 2 1/2 F (NPT for UL version)	805	31.69	962	37.87	1040	41	165	364

Technical specifications FD 5-95 50 Hz & 60 Hz

Model	Maximum inlet conditions at full flow (ambient/ inlet)	Inlet flow with a pressure dew point of 3°C/37.4°F		Pressure drop at full flow		Power consumption		Max. working pressure		Compressed air connections	Dimensions						Weight	
											Length		Width		Height			
	°C	l/s	cfm	bar	psi	kW	hp	bar	psi		mm	in	mm	in	mm	in	kg	lb
FD 5	60	6	13	0.07	1.02	0.2	0.27	16 (1)	233 (1)	R 3/4	525.5	20.7	390	15.4	530	20.9	27	60
FD 10	60	10	21	0.11	1.6	0.2	0.27	16 (1)	233 (1)	R 3/4	525.5	20.7	390	15.4	530	20.9	27	60
FD 15	60	15	32	0.12	1.75	0.33	0.45	16 (1)	233 (1)	R 3/4	525.5	20.7	390	15.4	530	20.9	32	70
FD 20	60	20	42	0.12	1.75	0.41	0.56	16 (1)	233 (1)	R 3/4	525.5	20.7	390	15.4	530	20.9	34	75
FD 25	60	25	53	0.17	2.47	0.41	0.56	16 (1)	233 (1)	R 3/4	525.5	20.7	390	15.4	530	20.9	34	75
FD 30	60	30	64	0.25	3.64	0.41	0.56	16 (1)	233 (1)	R 3/4	525.5	20.7	390	15.4	530	20.9	34	75
FD 40	60	40	85	0.2	2.91	0.57	0.76	16 (1)	233 (1)	R 1	716	28.2	389	15.3	679	26.8	57	125
FD 50	60	50	106	0.2	2.91	0.54	0.72	16 (1)	233 (1)	R 1	716	28.2	389	15.3	679	26.8	58	128
FD 60	60	60	127	0.22	3.2	0.63	0.84	13	189	R 1	795	31.3	482	19.0	804	31.7	80	176
FD 70	60	70	148	0.22	3.2	0.87	1.17	13	189	R 1	795	31.3	482	19.0	804	31.7	81	178
FD 95	60	95	201	0.22	3.2	1.18	1.58	13	189	R 1	795	31.3	482	19.0	804	31.7	87	192

How refrigerant dryers work

A refrigerant dryer uses a refrigerant circuit and heat exchanger(s) to pre-cool air, refrigerate it to condense out moisture vapor, and then re-heat the air to prevent pipe sweating downstream.

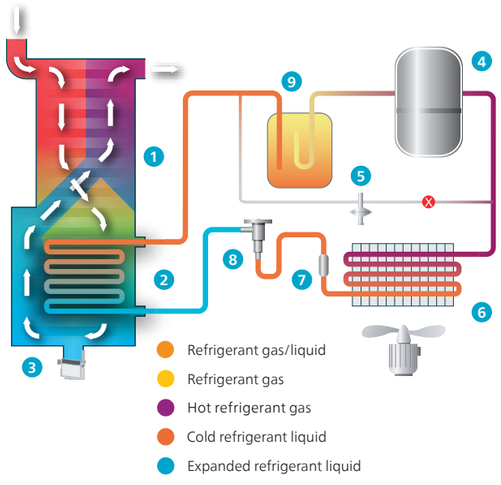

Air circuit

1. Air-to-air heat exchanger: Incoming air is cooled down by the outgoing dry, cold air
2. Air-to-refrigerant heat exchanger: The air is cooled to the required dew point by the refrigerant circuit. The water vapor condenses into water droplets
3. Integrated water separator: The moisture is collected and evacuated by the electronic drain

Refrigerant circuit

4. Refrigerant compressor: Compresses the gaseous refrigerant to a higher pressure
5. Regulation device: The hot gas bypass valve regulates the dryer to prevent freezing at lower load conditions
6. Refrigerant condenser: Cools the refrigerant so that it changes from a gas to a liquid
7. Refrigerant filter: Protects the expansion device from harmful particles
8. Thermostatic expansion valve: The expansion process reduces the pressure and cools the refrigerant further
9. Liquid separator: Ensures that only refrigerant gas enters the compressor

Technical specifications FX 5-300 50& 60Hz

Model	Inlet capacity		Pressure drop		Maximum working pressure		Electrical supply		Dimensions						Weight		Compressed air connections
							voltage/phase/frequency		Length		Width		Height				
	l/s	cfm	bar	psi	bar	psi			mm	inch	mm	inch	mm	inch	kg	lb	
FX5	6	13	0.15	2.18	16	232	230/1/50Hz	115-230/1/60Hz	493	19.41	350	13.78	450	17.72	19	42	3/4" M
FX10	10	21	0.25	3.63	16	232	230/1/50Hz	115-230/1/60Hz	493	19.41	350	13.78	450	17.72	19	42	3/4" M
FX15	14	30	0.25	3.63	16	232	230/1/50Hz	115-230/1/60Hz	493	19.41	350	13.78	450	17.72	20	44	3/4" M
FX20	20	42	0.25	3.63	16	232	230/1/50Hz	115-230/1/60Hz	493	19.41	350	13.78	450	17.72	25	55	3/4" M
FX30	30	64	0.3	4.35	16	232	230/1/50Hz	115-230/1/60Hz	493	19.41	350	13.78	450	17.72	27	60	3/4" M
FX40	39	83	0.14	2.03	14	203	230/1/50Hz	115-230/1/60Hz	497	19.57	370	14.57	764	30.08	51	112	1" F
FX50	50	106	0.2	2.90	14	203	230/1/50Hz	115-230/1/60Hz	497	19.57	370	14.57	764	30.08	51	112	1" F
FX60	60	127	0.18	2.61	14	203	230/1/50Hz	115-230/1/60Hz	557	21.93	460	18.11	789	31.06	62	137	1 1/2" F
FX70	68	144	0.18	2.61	14	203	230/1/50Hz	115-230/1/60Hz	557	21.93	460	18.11	789	31.06	62	137	1 1/2" F
FX90	87	184	0.25	3.63	14	203	230/1/50Hz	115-230/1/60Hz	557	21.93	460	18.11	789	31.06	62	137	1 1/2" F
FX110	108	229	0.2	2.90	14	203	230/1/50Hz	230/1/60Hz	557	21.93	580	22.83	899	35.39	82	181	1 1/2" F
FX130	128	271	0.26	3.77	14	203	230/1/50Hz	230/1/60Hz	557	21.93	580	22.83	899	35.39	82	181	1 1/2" F
FX170	167	354	0.16	2.32	14	203	400/3/50Hz	460/3/60Hz	1040	40.94	805	31.69	962	37.87	145	320	2" F
FX200	200	424	0.23	3.34	14	203	400/3/50Hz	460/3/60Hz	1040	40.94	805	31.69	962	37.87	158	348	2" F
FX250	250	530	0.18	2.61	14	203	400/3/50Hz	460/3/60Hz	1040	40.94	805	31.69	962	37.87	165	364	2 1/2" F
FX300	300	636	0.18	2.61	14	203	400/3/50Hz	460/3/60Hz	1040	40.94	805	31.69	962	37.87	164	362	2 1/2" F

Reference conditions Limitations

		Reference conditions		Limitations	
		Standard	UL-approved	Standard	UL-approved
FX 5-300	Ambient temperature	25°C	100°F	5°C-43°C (1)	41°F-109°F (1)
	Inlet temperature	35°C	100°F	5°C-55°C	41°F-131°F
	Operating pressure	7 bar	100 psi	6-14 bar (2)	87-203 psi (2)
FD 5-95	Ambient temperature	25°C	100°F	1°C-46°C	34°F-131°F
	Inlet temperature	35°C	100°F	5°C-60°C	41°F-115°F
	Operating pressure	7 bar	100 psi	6-14 bar (3)	87-203 psi (3)
FD VSD 100-300	Ambient temperature	25°C	100°F	5°C-46°C	41°F-131°F
	Inlet temperature	35°C	100°F	5°C-60°C	41°F-140°F
	Operating pressure	7 bar	100 psi	6-14 bar	87-203 psi

Tested according to ISO 7183:2007 (1) FX 170-300: 46°C/131°F (2) FX 5-30: 16 bar/232 psi (3) FD 5-50:16 bar/232 psi

Notes

Refrigerant types:	R513A for FX 5-50, FD 5-50
	R410A for FX 60-300, FD 60-95, FD VSD

2935 0868 42 © 2020, Atlas Copco Airpower NV, Belgium. All rights reserved. Designs and specifications are subject to change without notice or obligation. Read all safety instructions in the manual before usage.

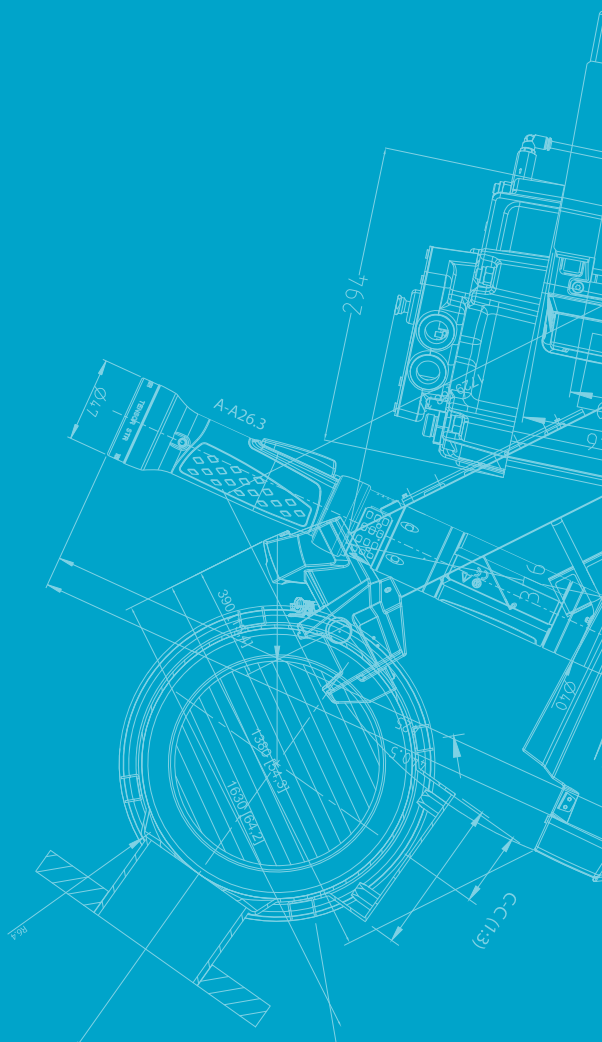

LLOYD'S REGISTER · LRQA
ISO 9001 • ISO 14001
OHSAS 18001

Atlas Copco

atlascopco.com

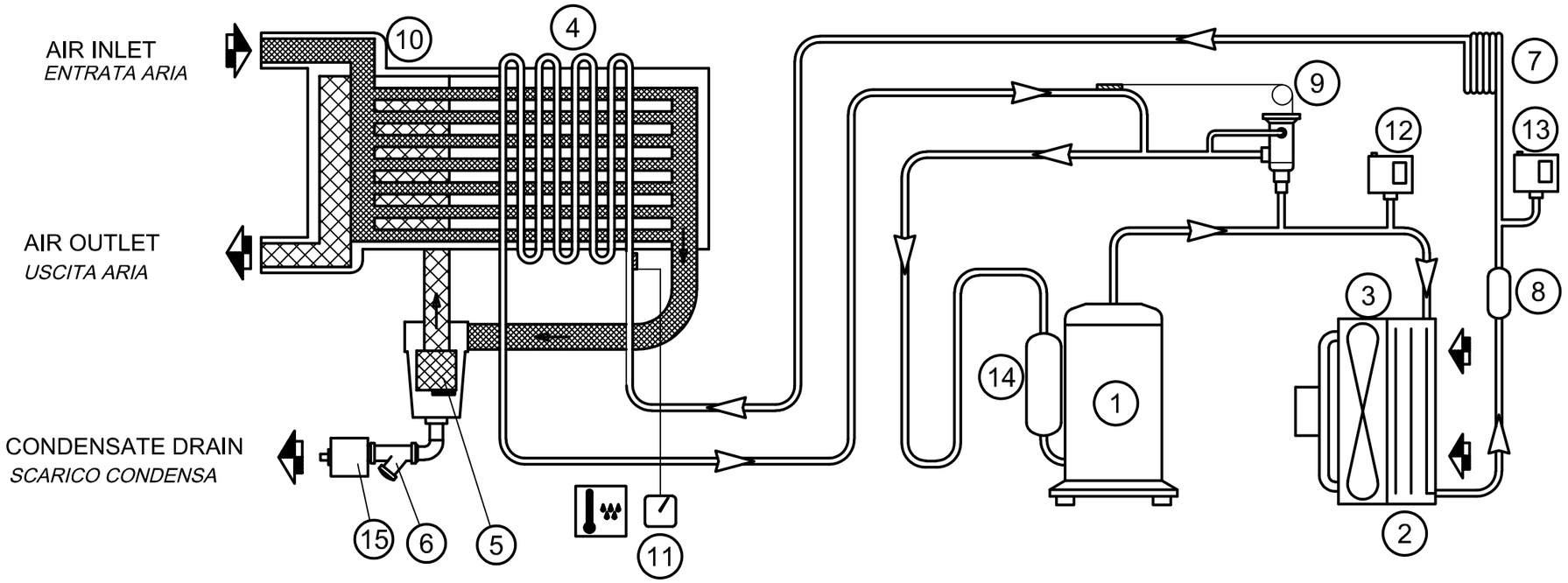

		15	CONDENSATE DISCHARGE *SCARICO CONDENSA*
7	EXSPANSION CAPILLARY *CAPILLARE*	14	LIQUID SEPARATOR (if included) *SEPARATORE DI LIQUIDO (se incluso)*
6	IMPURITY TRAP *RACCOGLITORE DI IMPURITA'*	13	FAN PRESSUE SWITCH (if included) *PRESSOSTATO VENTILATORE (se incluso)*
5	SEPARATOR *SEPARATORE*	12	MAX PRESSURE SWITCH (if included) *PRESSOSTATO MASSIMA (se incluso)*
4	EVAPORATOR *EVAPORATORE*	11	*DEW POINT THERMOMETER (if included)* *MISURATORE PUNTO DI RUGIADA (se incluso)*
3	FAN MOTOR *MOTOVENTILATORE*	10	AIR-AIR EXCHANGER *SCAMBIATORE ARIA-ARIA*
2	CONDENSER *CONDENSATORE*	9	HOT GAS VALVE *VALVOLA BY-PASS GAS CALDO*
1	COMPRESSOR *COMPRESSORE*	8	FREON FILTER *FILTRO FREON*

TAGS:

90-DR-001-A/B

CONFIDENTIAL:
This document is property of Atlas Copco AB and shall not without our permission be altered, copied, used for manufacturing or communicated to any other person or company.

Note	Position	Modified from	Date	Intr./Appd.		
00		Table updated. CID.27644, DN20054153	21-07-20	asavio	Parent 3D Model	Ed.Version 3D

Tolerances,if not indicated,according to:

Name	FLOW DIAGRAM	ATLAS COPCO DRYERS	Confidentiality class acc. to 1102 K: Confidential
Material	Not applicable		
Treatment	Not Applicable		ACDE

Atlas Copco

STATUS: APPROVED

Scale -:-	Family Dryers	Compare 9828490240	Drawing owner CAI	Transferred from
Drawn by Administrator	Blank nr.	Replaces		
Drawing format A3	Blank wt. Kg	Fini wt. Kg	Designation	Sheet ( ) 01 01
Des checked.	Prod checked.	Approved.	Date 16/11/2015	9828490250

TAGS:

90-DR-001-A/B

FX 5-300

ATLAS COPCO QUALITY AIR SOLUTIONS

General Description

The FX range of refrigerant dryers offers a reliable, cost effective and simple solution to those who need quality compressed air for their manufacturing processes. To avoid condensation, and therefore all chance of equipment and end-product corrosion and damage, compressed air needs to be dry — exactly what FX dryers are designed to do.

The FX dryer range is simple, yet robust and reliable. It is a no-frills range that relies on proven technology, solid components and uncomplicated design; these features combined deliver a constant dew point and reliable performance at any flow — in almost every manufacturing application.



Working Principle

Refrigerant drying means that the compressed air is cooled, which allows a large amount of the water condense and be separated. After cooling and condensing, the compressed air is reheated to around room temperature so that condensation does not form on the outside of the pipe system. This heat exchange between ingoing and outgoing compressed air, and as such reduces the required cooling capacity of the refrigerant circuit.

Cooling takes place via closed refrigerant system. FX refrigerant dryer, a freestanding machine that is used for dew points between +4°C and +3°C.

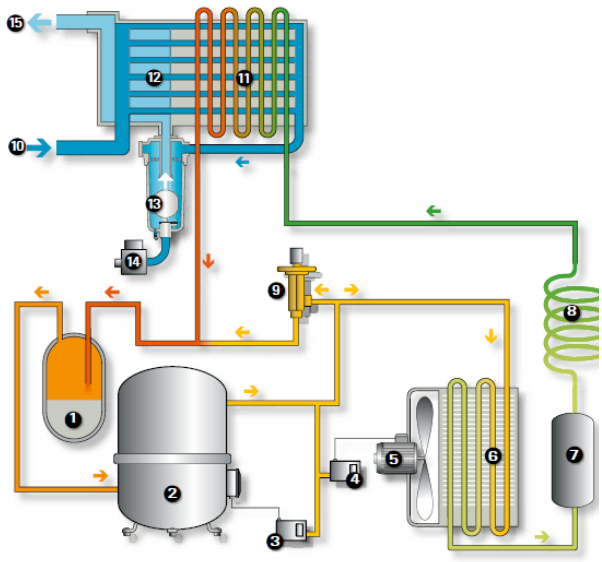

1. Refrigerant separator
2. Refrigerant compressor
3. Maximum pressure switch
4. Fan control pressure switch
5. Condensed fan
6. Condenser
7. Capillary filter
8. Capillary tube
9. Hot gas bypass
10 Air inlet
11. Air-refrigerant heat exchanger
12. Air-air heat exchanger
13. Water separator
14. Automatic drain
15. Air outlet

Scope of supply

1. Reliable Refrigerant Circuit

A closed circuit where the refrigerant flow is. Refrigerant compressor brings gaseous refrigerant to high pressure and high temperature. To ensure that only gaseous refrigerant only enters the compressor, a refrigerant separator is installed before it. It also includes the condenser that cools slightly the refrigerant, thus changes the refrigerant from gas to liquid state. The refrigerant's pressure should be reduced, thus lowering its temperature and increasing its cooling capacity. The capillary tube does this, and to protect from harmful particles, a Capillary filter is designed for the FX. Finally, to regulate the amount of refrigerant passing through the air-refrigerant heat exchanger, ensuring a stable pressure dew point, and eliminating the chance of the condensate freezing.



Energy efficient Air Circuit





Hot saturated air enters the dryer and is cooled down by the outgoing air via air-air heat exchanger. Reducing the temperature of the inlet air reduces the load on the refrigerant circuit. The air-refrigerant heat exchanger transfers the heat from compressed air to the cold refrigerant, forcing water vapour in the compressed air to condense. These condensates are separated in the water separator, equipped with electronic drain. On the air outlet, the cooled compressed air is reheated to prevent condensation into the pipe works, and now equipped with a pressure dew point sensor

Features & Benefits

Energy Savings

Low energy consumption

- Improved heat exchanger, lowering the overall pressure drop
- Air-air heat exchanger lowers the load in the refrigerant circuit
- High efficiency refrigerant compressor

Reliable operation

No condensation in the factory pipe work

- Air-air heat exchanger, pre heats the cold compressed air
- Hot gas bypass, to prevent freezing at partial load
- Efficient water separator and automatic drain
- Pressure dew point sensor for an accurate pressure dew point measurement

Easy connectivity

Potential free contact, to allow remote monitoring on customer’s data control system

All materials supplied are in compliance with the requirements of the List of Prohibited Substances

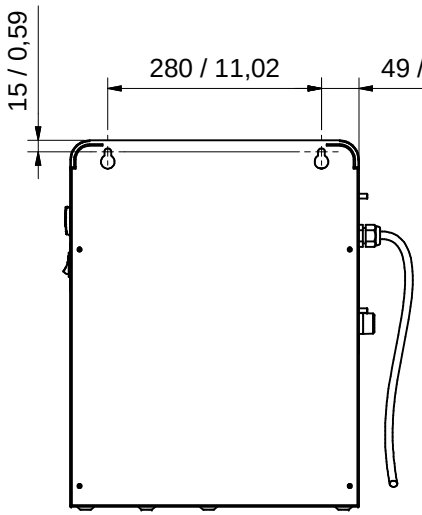

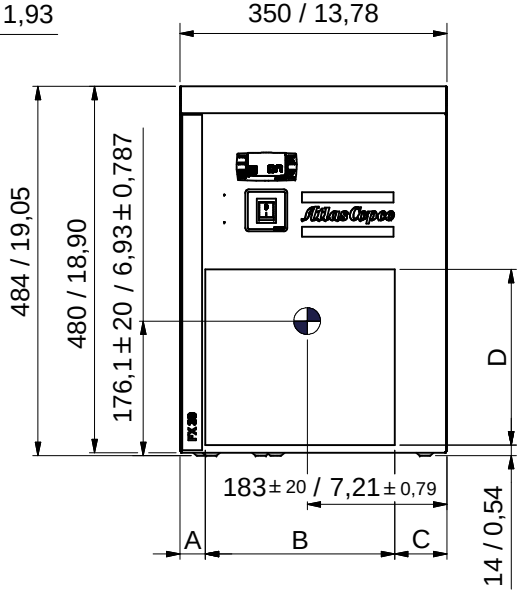

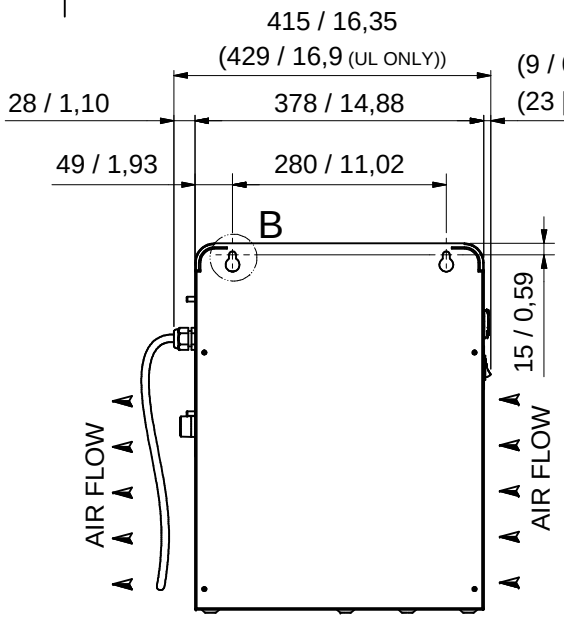

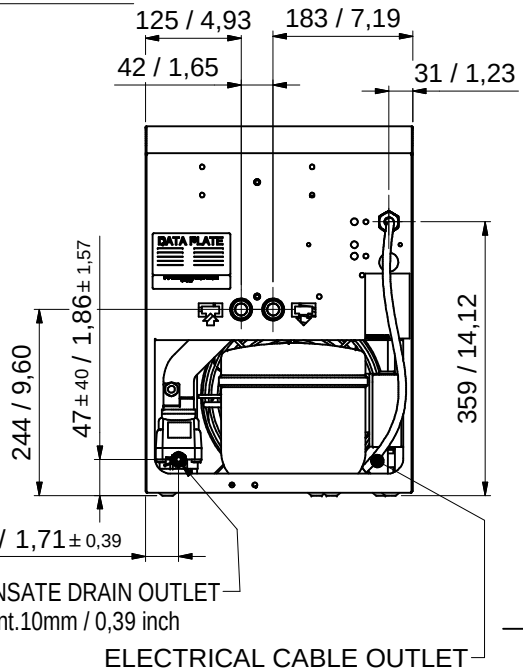

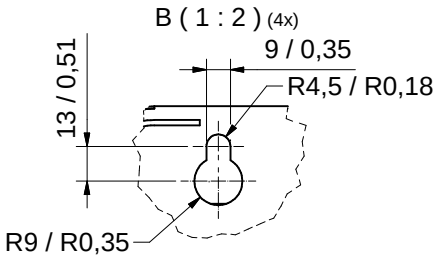

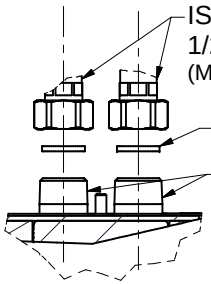

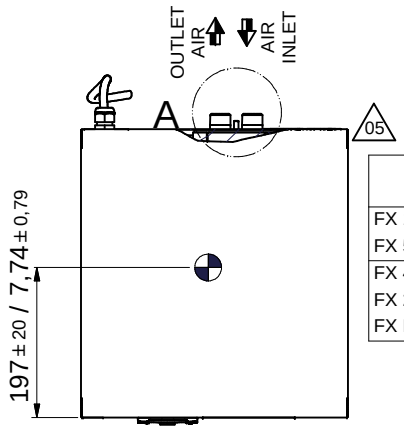

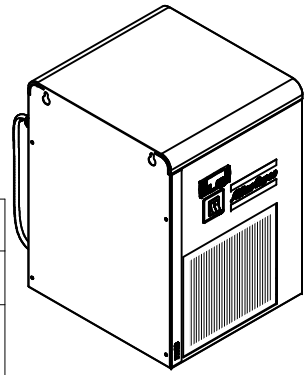

CENTER OF GRAVITY

TAGS:

90-DR-001-A/B

DRYER VERSION	A (mm / inch)	B (mm / inch)	C (mm / inch)	D (mm / inch)
FX 1-2-3 MODEL (R134a) FX 5-10-15 MODEL (R513A)	81 / 3,19	188 / 7,4	81 / 3,19	175 / 6,89
FX 4-5 MODEL (R134a) FX 20-30 MODEL (R513A) FX HT1 (R134a) + HT6 MODEL (R513A)	34 / 1,34	248 / 9,76	68 / 2,68	230 / 9,06

ALL DIMENSIONS: mm [inch]

Tolerances, if not indicated, according to:
ATLAS COPCO STANDARD CLASS

Name: DIMENS. DRAWING — FX1-5+FX5-30+FXHT1+6
Material: Not applicable
Treatment: Not Applicable
Confidentiality Class acc. to 1102 K: Confidential
INV

Atlas Copco
STATUS: Approved

Scale 1:5 | Family DRYERS FX | Compare
Drawn by sgraser | Blank nr. | Replaces
Drawing Owner: CAI | Transferred from
Drawing format A3 | Blank wt. 0 Kg | Fini wt. N/A | Designation | Sheet 1 / 1
Des checked. | Prod checked. | Approved. | Date 14/04/2005

2202754900

Ed	Position	Modified from	Date	Intr./Appd.	Parent 3D model	Ed . Version 3D
05		Added FX5-30 versions. CID.27573, DN20054129	23-06-20	asavio	2202754800	04.00

CONFIDENTIAL:
This document is property of Atlas Copco AB and shall not without our permission be altered, copied, used for manufacturing or communicated to any other person or company.

CABLE BILL OF MATERIALS				SIDE A		SIDE B		
CABLE FOR	ID	LENGTH L [mm]	CABLE TYPE	L1 [mm]	TERMINAL TYPE	L2 [mm]	TERMINAL TYPE	NOTES
MAIN SUPPLY (LINE)	L1 L2 GND	4000	AWG14 3G2,5	-	NEMA5-15P	80 150GND	2xBF-P10 + S2,5-M6	LISTED SJ, SJT, SJTO, SJOOW, SJTOW
MOTOR (M1)*		850	AWG14 3G2,5	100	2xBF-F 608 + 160831-3(GND)	80 150GND	2xGF-P10 + S2,5-M6	Style 2587 or 2550 or 21098 or 21216 or equivalent
FAN MOTOR (M2)		-	-	-	-	-	-	
DIGITAL CONTROLLER (DC)		450	AWG18 2x1	100	2xRF-F 608P + BF-F 608P	80	-	
SOLENOID VALVE (SOL)		1250	AWG18 2x1	-	43650/B **	80	-	
FREE CONTACT (FC)		300	AWG18 2x1	80	2xRF-F 608P	80	2x221-412	Style 1015 t≥90°C

2205042801 WIRE HARN. FX5/1-15/3(E/A0-2) 115/60 UL rev01

ID	DESCRIPTION	TYPE	MANUFACT.	CODE	QUANT.	POSITION
DSC	SWITCH	OT25FT3	ABB	1089949849	1	
	HANDLE	OHBS3RH	ABB	1089949850	1	
	Plastic cable tie	5203				
		320-30				
	CABLE GLAND	M20X1,5		0698514121	1	
	NUT	M20x1,5		0697980953	1	
	SERV. DIAGR	A4 FORMAT		2205042809	1	

* cable Φext ≤ 9.5mm

COMPULSORY INSTALLATION AT CUSTOMER CARE.
FUSES (FU) + DISCONNECTOR SWITCH (SU)
SU size ≥ FLA x 1.25

Model	FLA	CC type fuses	J or RK type fuses
FX5(E0)	2.4A	7	4
FX1(A0)	2.4A	7	4
FX10(E1)	2.7A	8	4.5
FX2(A1)	2.7A	8	4.5
FX15(E2)	3.4A	10	5.6
FX3(A2)	3.4A	10	5.6

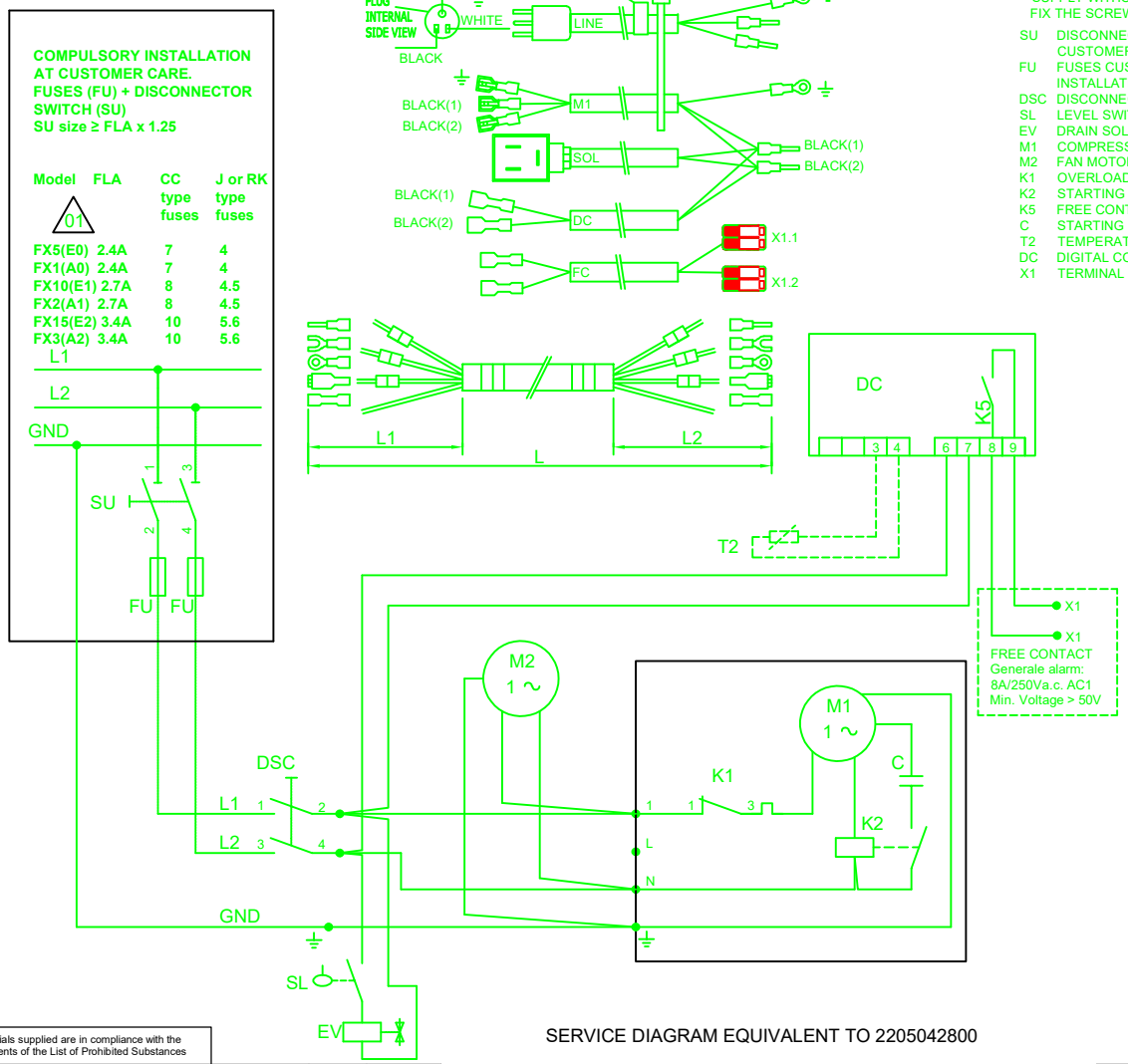

** SUPPLY WITHOUT GASKET
FIX THE SCREW WITH ADHESIVE TAPE

SU	DISCONNECTOR SWITCH CUSTOMER CARE INSTALLATION
FU	FUSES CUSTOMER CARE INSTALLATION
DSC	DISCONNECTOR SWITCH
SL	LEVEL SWITCH
EV	DRAIN SOLENOID VALVE
M1	COMPRESSOR MOTOR
M2	FAN MOTOR
K1	OVERLOAD RELAY
K2	STARTING RELAY
K5	FREE CONTACT
C	STARTING CAPACITOR
T2	TEMPERATURE SENSOR NTC (P2)
DC	DIGITAL CONTROLLER
X1	TERMINAL FREE CONTACT

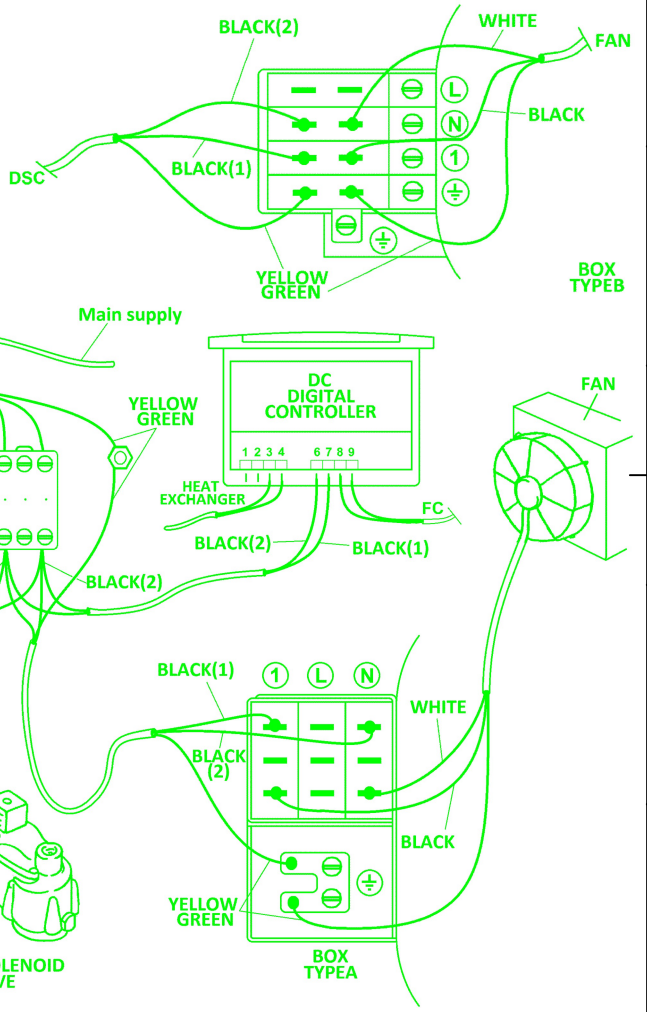

All materials supplied are in compliance with the requirements of the List of Prohibited Substances

Note	Position	Modified from	Date	Intr./Appd.
00.00		Upgraded model name. DN20054137 CID27606	10/06/2020	

SERVICE DIAGRAM EQUIVALENT TO 2205042800

Parent 3D Model	Ed.Version 3D

Tolerances,if not indicated,according to:	General tolerances				
ATLAS COPCO STANDARD CLASS	1350K - V				
Name: SERVICE DIAG. FX5-15(E0-2), FX1-3(A0-2) 115/60 FREE CONTACT UL				Confidentiality class acc. to 1102 K: Confidential	
Material: See Drawing					
Treatment: Not Applicable				ACDE	
Scale: -:-	Family: A2	Compare		Drawing owner: CAI	Transferred from
Drawn by: ATLASCOPCO\caibmaric	Blank nr.	Replaces			
Drawing format	Blank wt. Kg	Fini wt. Kg	Designation	Sheet ( ) 01 01	
STATUS: For Approval	Des checked.	Prod checked.	Approved.	Date: 27/09/2018	2205042809

CONFIDENTIAL:
This document is property of Atlas Copco AB and shall not without our permission be altered, copied, used for manufacturing or communicated to any other person or company.

PN: 1122685

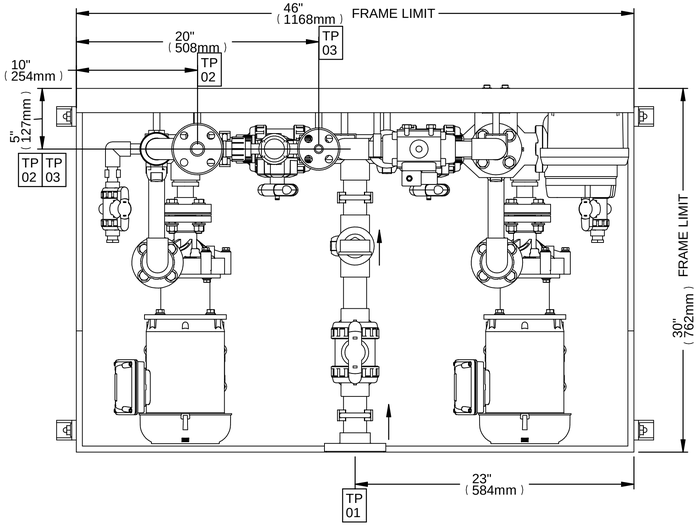

TERMINATION POINT SCHEDULE		
NOZZLE(TP)	SERVICE	CONNECTION
01	SUCTION / INLET	1-1/2" FF FLANGE, 150#, PVC
02	DISCHARGE / OUTLET	1" FF FLANGE, 150#, PVC
03	PSV RELIEF OUTLET	1/2" FF FLANGE, 150#, PVC

MAG DRIVE CENTRIFUGAL PUMP
MODEL: DB9V-R-E-FF-M219
MAXIMUM FLOW: 46 USGPM @ HEAD 11FT
MINMUM FLOW: 0.5 USPGM @ HEAD 67FT
CONSTRUCTION MATERIALS: PVDF/EPDM O-RING
MOTOR: 3435 RPM,1 HP (0.75 kW), 230/460V,60 Hz, 3 Ph
TYP: x2 (DUTY / STANDBY)

NOTE:SYSTEM OPERATING CONDITIONS ARE DIFFERENT FROM PUMP PERFORMANCE CURVE.
PLEASE REFER TO DRAWING NOTES ON SECOND PAGE FOR SYSTEM OPERATING & DESIGN CONDITIONS

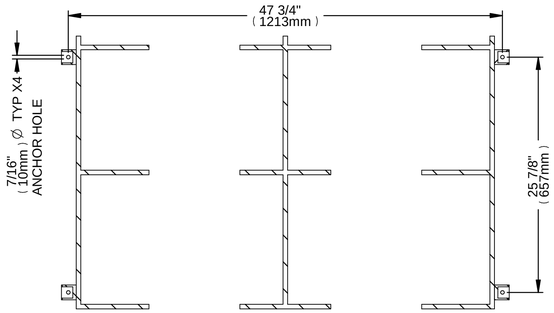

SECTION B-B
FOOTPRINT
USE QTY:4, 3/8" BOLTS
(ANCHOR BOLTS NOT IN PROMINENT SCOPE)

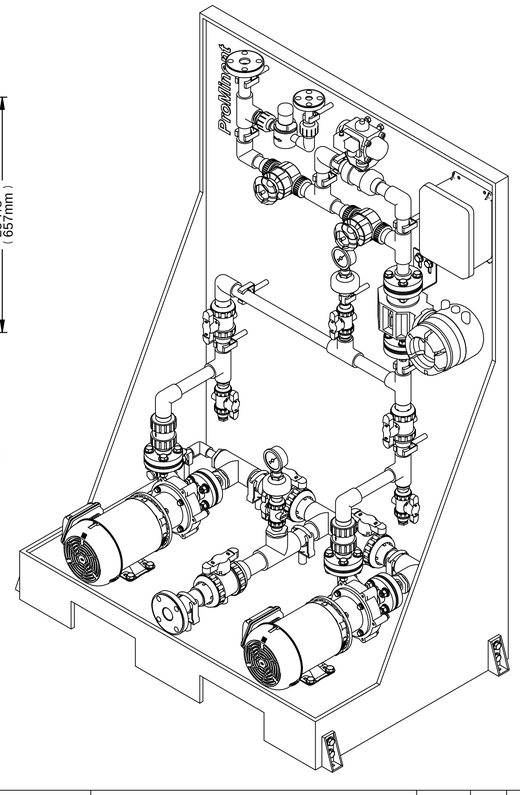

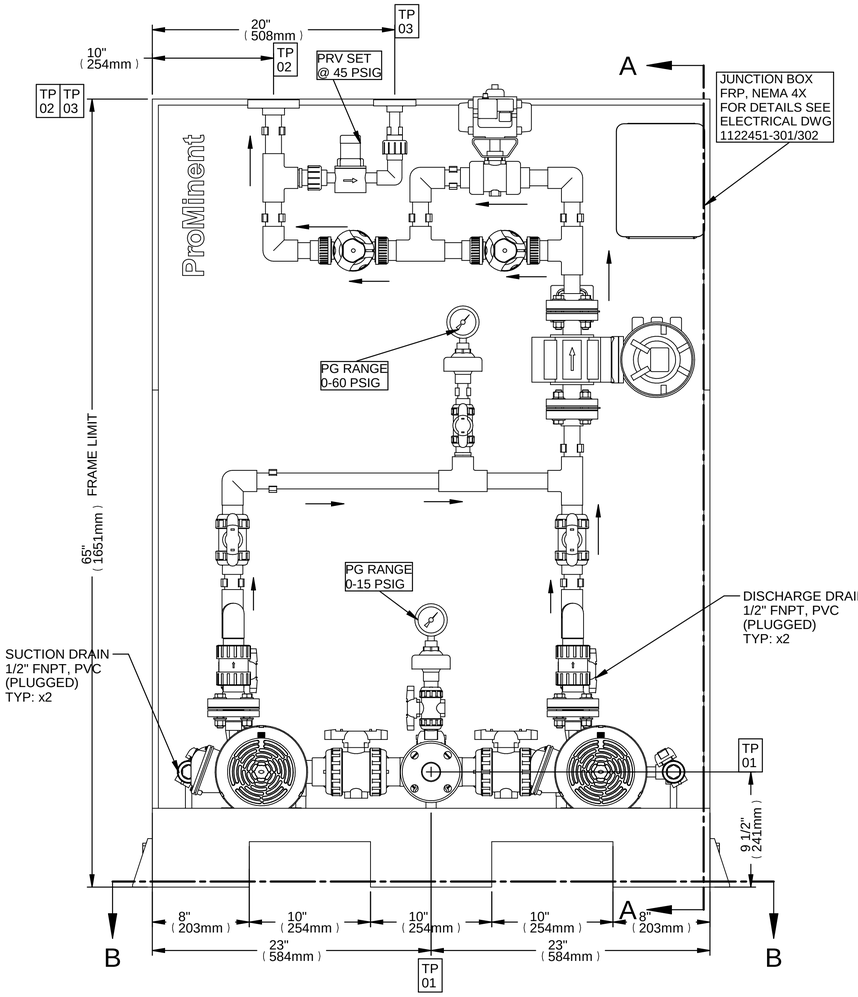

TAG:
23-P-301-A/B
23-CV-305-A/B
23-HCV-305
23-HCV-306
23-PSV-301
23-STR-303
23-HV-301
23-HV-302
23-HV-303-A/B
23-HV-304-A/B
23-HV-307-A/B
23-HV-306-A/B
23-HV-308
23-PI-301
23-PI-302
23-FIT-301
23-FV-305

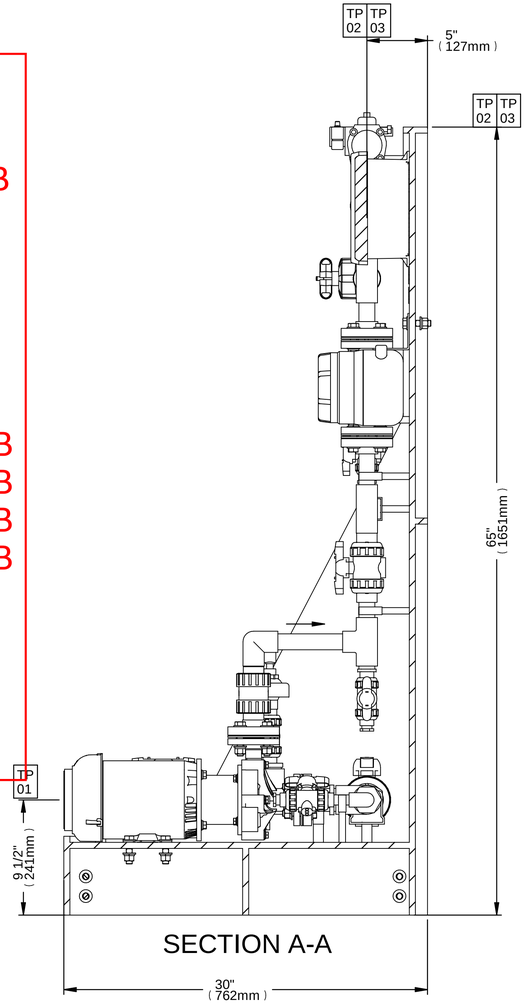

SECTION A-A

REV	DATE (YYYY-MM-DD)	DESCRIPTION	BY	APPD	REVD
1	2022-08-19	REVISED NOTE 7	GB	RJ	
0	2022-03-15	INITIAL RELEASE	GB	RJ	

REVISIONS

CUSTOMER
SUEZ WATER TECHNOLOGIES & SOLUTIONS

SUBJECT

PFC PROSIP No
1122685

PURCHASE ORDER No
--

PURCHASER'S EQUIP. No

TITLE
SUEZ MAGDRIVE-F PVC-EPDM, 2P 460V
- GENERAL ARRANGEMENT DRAWING -

THIS DRAWING IS THE PROPERTY OF PROMINENT FLUID CONTROLS LTD. AND SHALL NOT BE COPIED OR TRANSFERRED WITHOUT THE WRITTEN CONSENT OF PROMINENT FLUID CONTROLS LTD.

ENGINEERS SEAL

ProMinent®
THE PROMINENT GROUP OF COMPANIES

GUELPH - ONTARIO - CANADA

PROMINENT FLUID CONTROLS LTD.
490 SOUTHGATE DRIVE.
GUELPH, ONTARIO, CANADA
N1G 4P5
TEL. 519 836 5692 FAX. 519 836 5226

PROMINENT FLUID CONTROLS INC.
136 INDUSTRY DRIVE,
PITTSBURGH P.A., USA.
15275
TEL. 412 787 2484 FAX. 412 787 0704

DESIGNED	GB	APPROVED	
DRAWN	GB	SCALE	NTS
CHECKED	RJ	DATE (YYYY-MM-DD)	2022-03-15

SHEET No: 1/2

CUSTOMER DWG No

PFC DWG No
1122685-200- 1

REV
1

PN: 1122685

COMPONENT LIST

*PART IS HIDDEN FROM VIEW

ITEM	PART #	DESCRIPTION	QTY
1	7740695	FITTING: 1" SW FLANGE, 1PC, 150#, SCH80, PVC, ASTM D 1784	7
2	7900948	FITTING: 1-1/2" SW FLANGE, 1PC, 150#, SCH80, PVC, ASTM D 1784	1
3	7741396	FITTING: 1/2" SW FLANGE, 1PC, 150#, SCH80, PVC, ASTM D 1784	1
4	7741327	FITTING: ELBOW, 1" SWxSW, PVC, SCH 80	6
5	7260006	FITTING: ELBOW, 1/2" SWxSW, PVC, SCH 80	3
6	7000325	FITTING: PLUG 1/2" MNPT PVC SCH 80	4
7	7741358	FITTING: REDUCER BUSHING, 1" SPIG x 1/2" SW, PVC SCH80	4
8	7900952	FITTING: REDUCER BUSHING, 1-1/2" SPIG x 1" SW, PVC SCH80	2
9	7900950	FITTING: REDUCER BUSHING, 1-1/2" SPIG x 1/2" SW, PVC SCH80	3
10	7741333	FITTING: TEE, 1" SWxSWxSW, PVC, SCH80	7
11	7741442	FITTING: TEE, 1-1/2" SWxSWxSW, PVC, SCH 80	4
12	7260035	FITTING: UNION, 1/2" SWxSW, PVC, EPDM, SCH80	2
13	1122575	FRAME: MAG DRIVE 2 PUMP, 65" x 46" x 30", BLACK PE	1
14	7904559	GASKET: 1", FULL FACE, 150#, 1/8" THICK, EPDM	8
15	7902194	HARDWARE: FLAT WASHER, 1/2", 1.060" OD, 316 SS	48
16	7900011	HARDWARE: FLAT WASHER, 1/2", 316 SS	36
17	7902724	HARDWARE: HEX CAP SCREW, 1/2"-13, 2" LG, 18-8 SS, 1-1/4" THREAD LG	18
18	7900847	HARDWARE: HEX CAP SCREW, 1/2"-13, 2.5"LG, 18-8 SS, 1" THREAD LG	24
19	7900015	HARDWARE: HEX NUT, 1/2"-13, 18-8 SS	42
20	7900012	HARDWARE: LOCK WASHER, 1/2", 18-8 SS	42
21	1121677	INSTRUMENT: 2 -1/2" PRESSURE GAUGE, 0-15 PSIG, 304SS CASE, 316SS INTERNALS, REMOVEABLE BEZZEL 1/4" MNPT BOTTOM MOUNT, SILICONE OIL FILL WITH PVC ISOLATOR, 1/2" SOCKETWELD PROCESS CONNECTION, 1/4" FNPT GAUGE CONNECTION, GLYCERINE FILL, WIKA	1
22	1121678	INSTRUMENT: 2 -1/2" PRESSURE GAUGE, 0-60 PSIG, 304SS CASE, 316SS INTERNALS, 1/4" MNPT BOTTOM MOUNT, SILICONE OIL FILL WITH PVC ISOLATOR, 1/2" SOCKETWELD PROCESS CONNECTION, 1/4" FNPT GAUGE CONNECTION, GLYCERINE FILL, WIKA	1
23	1122666+1122667+1122667	INSTRUMENT: MAGNETIC FLOW METER, PROMAG 10P25, DN25, INTEGRAL UNIT, 1" FLANGE 150# CONNECTIONS-SS(NON WETTED, PTFE LINER ANSI B16.5, CONNECTIONS, INTEGRAL MOUNTED NEMA-4X ENCLOSURE WITH LCD DISPLAY, 4-20mA OUTPUT, HART PROTOCOL, WITH TWO ALLOY C22 GROUND DISKS. 24VDC - ENDRESS-HAUSER	1
24	7900315	LABEL: PROMINENT LOGO, WHITE & ORANGE x 1-7/8"H, VINYL	1
25	1122453	MAG DRIVE CENTRIFUGAL PUMP, 1" 150# RFSO, PVDF IMPELLER, EPDM, 230/460V, 3 Ph, 60 Hz, FINISH THOMPSON INC	2
26	7741324	PIPE: 1", PVC, SCH80	8FT
27	7741447	PIPE: 1-1/2", PVC, SCH80	4FT
28	7741400	PIPE: 1/2", PVC, SCH80	2FT
29	7741318	SUPPORT: 1" (32mm) PIPE CLIP WITH 1/4" x 2-1/4" PVC PIPE STANDOFF	9
30	1122577	SUPPORT: 1"FLANGE SUPPORT BRACKET, TYPE 1, 304 SS	1
31	7741590	SUPPORT: 1-1/2" (50mm) PIPE CLIP WITH 1/2" x 1-1/2" PVC PIPE STANDOFF	4
32	7260010	SUPPORT: 1/2" (20mm) PIPE CLIP WITH 1/4" x 2-1/2" PVC PIPE STANDOFF	4
33	7900388	SUPPORT: FRP INSIDE CORNER GUSSET 1-5/8" x4", 3 HOLE	4
34*	1122519	VALVE: 1" ACTUATOR PNEUMATIC, PA SERIES, PAS00, ON 1" PVC/EPDM, TYPE 21 UNION BALL VALVE, WITH PAD MOUNTED SOLENOID VALVE. 24 VDC - CHEMLINE,	1
35	1116853	VALVE: 1" DIAPHRAGM VALVE, PVC/EPDM, TYPE 514 PVC-U, SOCKET WELD ASTM, TRUE UNION. - GEORG FISCHER	2
36	1019883	VALVE: BACK PRESSURE VALVE, 1/2" SW CONNECTION, BODY MATERIAL PVC, PRESSURE RANGE 0-150PSI, PROMINENT	1
37	7903817	VALVE: BALL CHECK VALVE, 1" SW, TRUE UNION, BODY MATERIAL PVC, SEALS EPDM, CHEMLINE	2
38	7152157	VALVE: BALL VALVE, 1" SW, BODY MATERIAL PVC, SEALS EPDM, (COMES WITH SOCKET & FNPT ENDS), TYPE 21, CHEMLINE	2
39	7904867	VALVE: BALL VALVE, 1-1/2" SW, BODY MATERIAL PVC, SEALS EPDM, (COMES WITH SOCKET & FNPT ENDS), TYPE 21, CHEMLINE	3
40	7901183	VALVE: BALL VALVE, 1/2" SW, BODY MATERIAL PVC, SEALS EPDM, (COMES WITH SOCKET & FNPT ENDS), TYPE 21, CHEMLINE	6

SHIPPED LOOSE ITEMS

ITEM	PART #	DESCRIPTION	QTY
SL	1062205	DEVICE: 1-1/2" TRUE UNION Y SEDIMENT STRAINER, PVC/EPDM SW	1

MAG DRIVE CENTRIFUGAL PUMP
MODEL: DB9V-R-E-FF-M219
MAXIMUM FLOW: 46 USGPM @ HEAD 11FT
MINMUM FLOW: 0.5 USPGM @ HEAD 67FT
CONSTRUCTION MATERIALS: PVDF/EPDM O-RING
MOTOR: 3435 RPM,1 HP (0.75 kW), 230/460V,60 Hz, 3 Ph
TYP: x2 (DUTY / STANDBY)

1/2 TOP SIDE = CHART NUMBER
BOTTOM SIDE = QUANTITY NUMBER

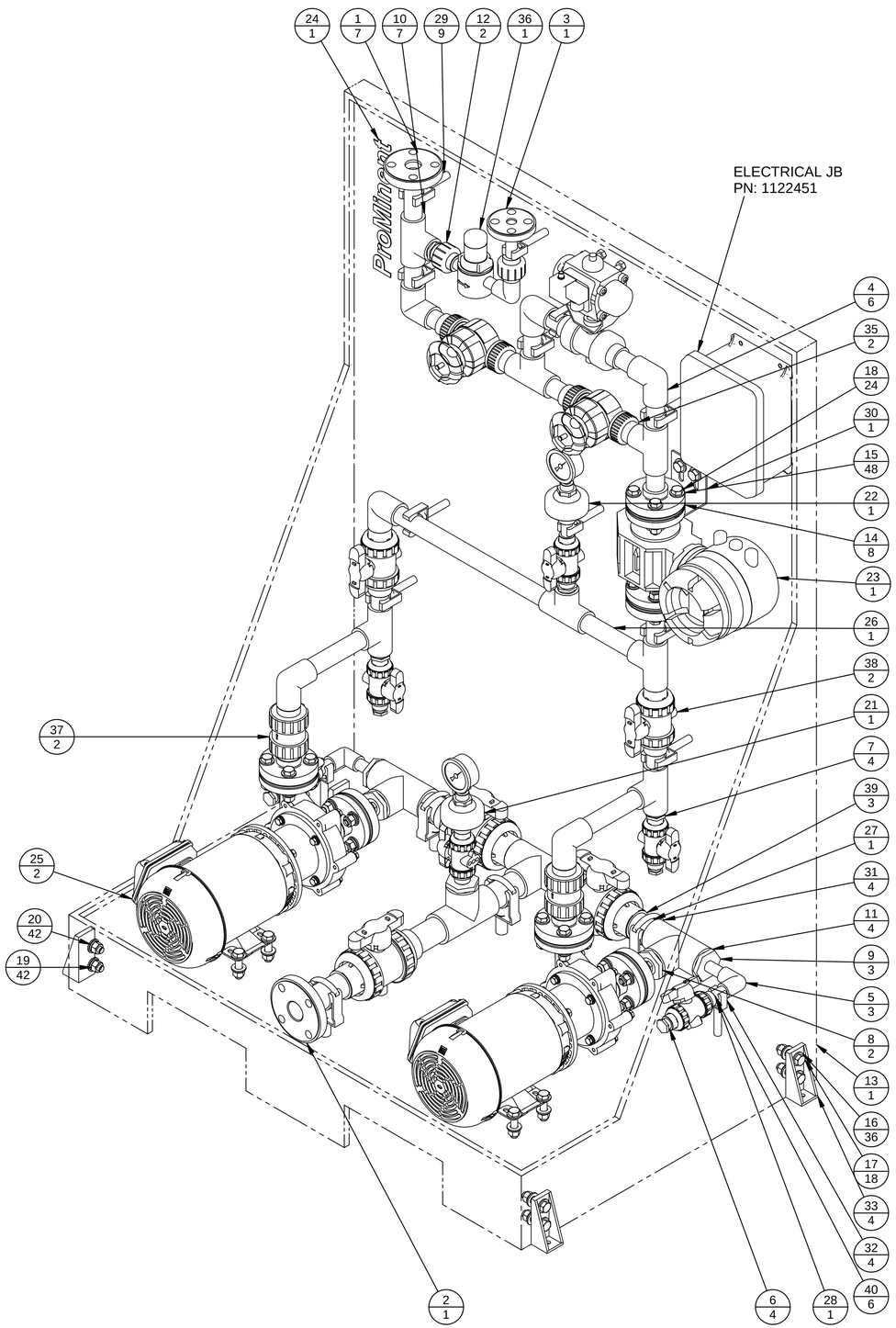

NOTES:

1. SYSTEM IS DESIGNED, FABRICATED, TESTED AND INSPECTED AS PER PROMINENT STANDARD

2. PIPING MATERIAL IS PVC SCH 80 IN CONFORMANCE WITH ASTM D 1785 (FOR PHYSICAL DIMENSIONS, TEST REQUIREMENTS AND MAXIMUM OPERATING PRESSURE) IN SIZES1-1/2",1" & 1/2" PIPE.
ALL CONNECTIONS ARE 1-1/2", 1" & 1/2" SCH 80 PVC SOCKET WELD UNLESS OTHERWISE REQUIRED BY PIPELINE DEVICES.UNIONS ARE TRUE UNION STYLE, SCH80 PVC WITH EPDM O-RING SEAL RATED FOR 150 PSIG. FLANGES ARE PVC, FULL FACE, CLASS 150, ASME/ANSI B16.5.

3.GASKETS ARE FULL FACE TYPE, CLASS 150, EPDM, 1/8" THK FOR FLANGE CONNECTION, ASME B16.20.

4. BOLTING ARE 18-8 SS HEX CAP SCREW WITH FLAT WASHER, LOCK WASHER AND 18-8 SS HEX NUT.

5. PUMP AND PIPING SUPPORT FRAME IS CONSTRUCTED OF BLACK POLYETHYLENE. MATERIAL THICKNESS: 1/2" [13MM].AND IS FABRICATED BY WELD CONSTRUCTION.

6. ALL INTERCONNECTING PIPE & FITTINGS AND WIRING BY OTHERS.

7. ALL SEAL MATERIAL IS PTFE/EPDM UNLESS OTHERWISE SPECIFIED BY CUSTOMER.

8. TOLERANCE ON ALL TERMINATION POINTS: +/-10mm (+/-3/8").

APPROX.SHIPPING WEIGHT: 285 LB (129 Kg).
APPROX.OPERATING WEIGHT: 310LB (140 Kg).

DESIGN NOTES:
SYSTEM OPERATING CONDITIONS ARE DIFFERENT FROM PUMP PERFORMANCE CURVE
MAXIMUM SYSTEM OPERATING FLOW: 30 USGPM @ 14 PSIG
MINIMUM SYSTEM OPERATING FLOW: 0.5 USGPM @ 29 PSIG

UPSTREAM INJECTION PUMP-SUCTION:

- DESIGN TEMPERATURE: MIN. 15ºC TO MAX. 25ºC
- DESIGN PRESSURE: 14.7 PSIG
- MIN. TEST PRESSURE: 25 PSIG

DOWNSTREAM INJECTION PUMP-DISCHARGE:

- DESIGN TEMPERATURE: MIN. 15ºC TO MAX. 25ºC
- DESIGN PRESSURE: 45 PSIG
- MIN. TEST PRESSURE: 55 PSIG

TESTING CONDITION:

- TEST TYPE: HYDROSTATIC
- TEST MEDIUM: WATER
- TEST TEMPERATURE: AMBIENT 68ºF (20ºC)
- TEST DURATION: 10 MIN. (MINIMUM)

CORROSION ALLOWANCE: 0.0" (0.0mm).

REV	DATE (YYYY-MM-DD)	DESCRIPTION	BY	APPD	REVD
1	2022-08-19	REVISED NOTE 7	GB	RJ	
0	2022-03-15	INITIAL RELEASE	GB	RJ	

REVISIONS

CUSTOMER
SUEZ WATER TECHNOLOGIES & SOLUTIONS

SUBJECT

PFC PROSIP No
1122685

PURCHASE ORDER No
--

PURCHASER'S EQUIP. No

TITLE
SUEZ MAGDRIVE-F PVC-EPDM, 2P 460V
- BILL OF MATERIALS -

THIS DRAWING IS THE PROPERTY OF PROMINENT FLUID CONTROLS LTD. AND SHALL NOT BE COPIED OR TRANSFERRED WITHOUT THE WRITTEN CONSENT OF PROMINENT FLUID CONTROLS LTD.

ENGINEERS SEAL

ProMinent®
THE PROMINENT GROUP OF COMPANIES
GUELPH - ONTARIO - CANADA
PROMINENT FLUID CONTROLS LTD.
490 SOUTHGATE DRIVE.
GUELPH, ONTARIO, CANADA
N1G 4P5
TEL. 519 836 5692 FAX. 519 836 5226
PROMINENT FLUID CONTROLS INC.
136 INDUSTRY DRIVE,
PITTSBURGH P.A., USA.
15275
TEL. 412 787 2484 FAX. 412 787 0704

DESIGNED	GB	APPROVED	
DRAWN	GB	SCALE	NTS
CHECKED	RJ	DATE (YYYY-MM-DD)	2022-03-15

SHEET No: 2/2

CUSTOMER DWG No

PFC DWG No
1122685-200- 2

REV
1

PumpCatalog.com
Questions? Call 1-800-810-1053

DB SERIES
MODEL DB9

For Citric Acid
Tag: 23-P-301-A/B



5 YEAR WARRANTY

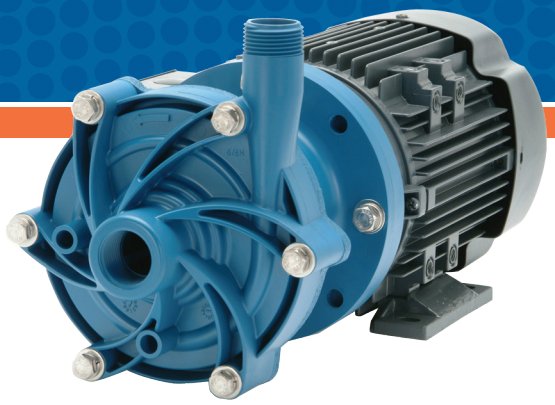

DB9 PERFORMANCE 3450 RPM

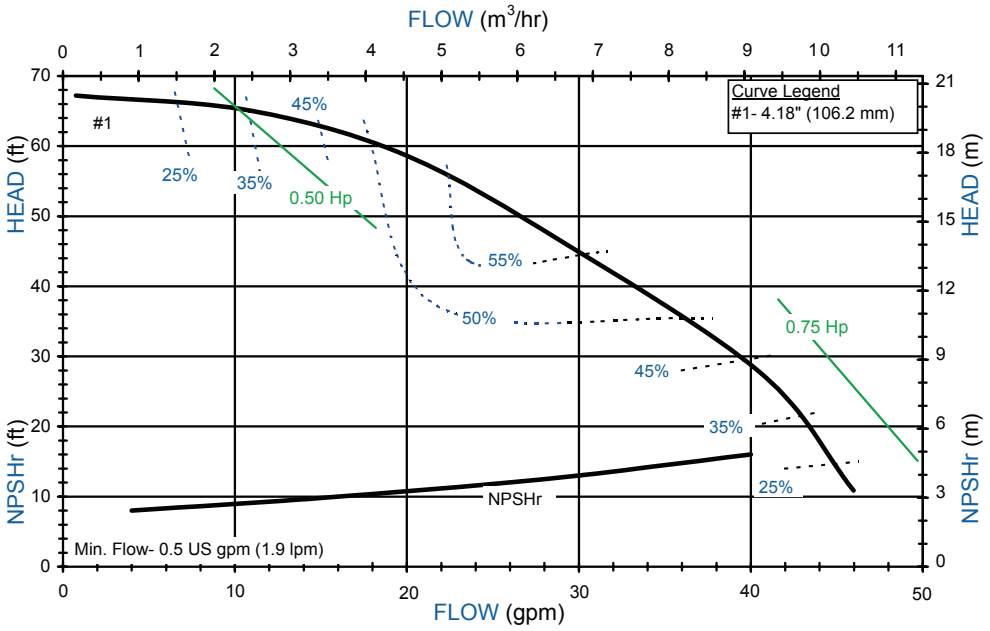

DB9 PERFORMANCE 1725 RPM

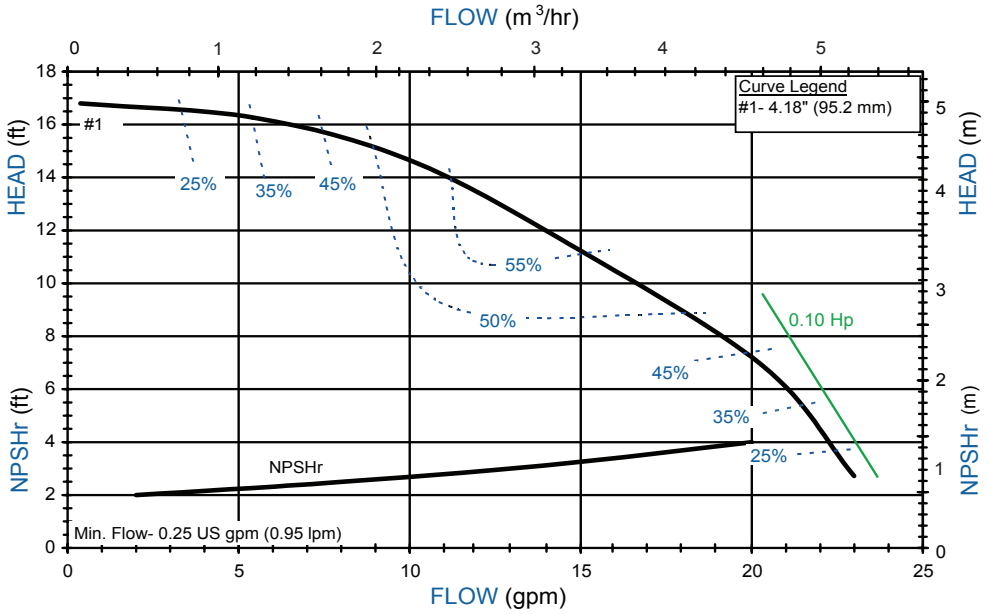

FEATURES & CAPABILITIES

+ *Five-year warranty*
+ *Extended run dry ability (with carbon bushing)*
+ *High operating efficiency*
+ *Polypropylene or PVDF construction*
+ *Powerful neodymium magnets*
+ *Close-coupled design*
+ *Threaded (NPT or BSP), flanged, or union connections*
+ *Horizontal or vertical installation with IEC motor*
+ *Back pullout design*
+ *Mounts to NEMA and IEC (B5 & B14) motor frames*
+ *Easy set measurement free drive*
+ *ISO 1940 G2.5 balancing*
+ *CE certified/ATEX available*
+ *Working pressure to 80 psi (5.5 bar)*
+ *Specific gravity over 1.8*
+ *Viscosity up to 150 cP*
+ *Polypropylene—180° F (82° C)*
+ *PVDF—220° F (104° C)*

APPLICATIONS

+ *Chemical processing*
+ *Plating*
+ *Water and wastewater*
+ *Electronics*
+ *Pharmaceuticals*
+ *Wet scrubber*
+ *Pulp and paper*
+ *Heat exchanger*
+ *and many more!*

FINISH THOMPSON PUMPING SOLUTIONS AROUND THE WORLD
finishthompson.com
Order Online: www.PumpCatalog.com

Specifications

Description		Polypropylene	PVDF
1	Impeller housing	Glass-fiber reinforced polypropylene (GF PP)	Carbon-fiber reinforced PVDF (CF PVDF)
1A	Impeller housing thrust ring	High purity alumina ceramic or silicon carbide (SiC)	
2	O-ring	FKM, EPDM, Simriz®, or Kalrez	
3	Impeller	GF PP	CF PVDF
3A	Impeller thrust ring	GF molybdenum disulfide filled PTFE, or SiC	
4	Inner drive	Neodymium iron boron magnets encapsulated in unfilled polypropylene	Neodymium iron boron magnets encapsulated in unfilled PVDF
5	Bushing	Carbon, PTFE, high purity alumina ceramic, or SiC	
6	Shaft	High purity alumina ceramic, Hastelloy® C, or SiC	
7	Barrier	GF PP	CF PVDF
7A	Barrier thrust ring	Silicon carbide	
8	Clamp ring	Ductile iron	
9	Motor adapter	GF PP	
10	Outer drive magnet	Nickel-plated neodymium iron boron magnets/ steel	
11A 11B 11C	Motor adapter sealing kit (NEMA only)	Buna N	

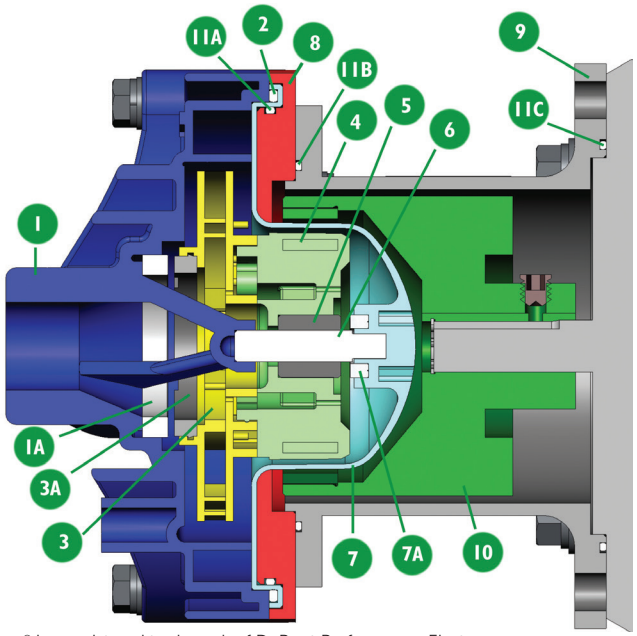

Kalrez® is a registered trademark of DuPont Performance Elastomers
Simriz® Perfluoroelastomer is a registered trademark of the Simrit® division of Freudenberg-NOK
Hastelloy® C is a registered trademark of Haynes International, Inc.

Dimensions

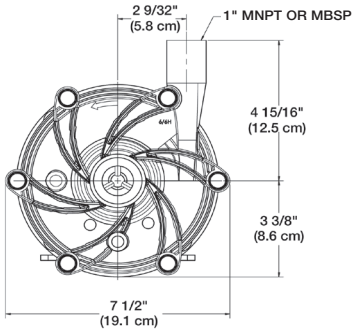

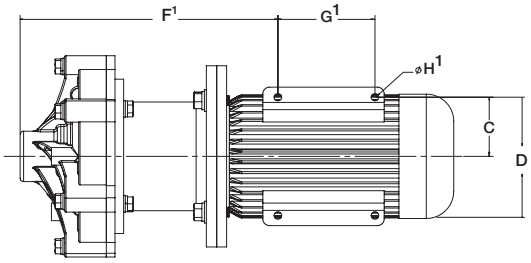

[1]Dimensions for F, G, and H can be found in the Outline Dimensions booklet in the Downloads section of www.finishthompson.com.

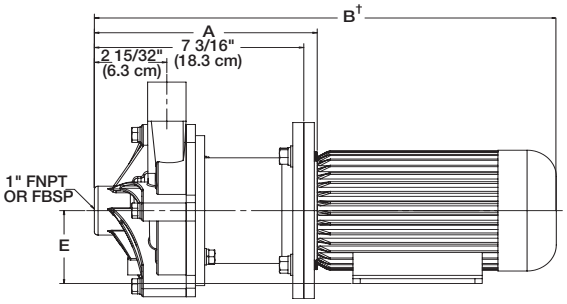

Also available 1" x 1" 150 lb. ANSI/ISO PN20/PN40/JIS 10K or 32mm x 32mm union connection. Flanges are in compliance with bolting dimensions only.

Motor Frame	A	B†	C	D	E	lbs. [kg] PP	lbs. [kg] PVDF
NEMA 56C	7-3/16" [18.3 cm]	17-7/16" [44.3 cm]	2-7/16" [6.2 cm]	4-7/8" [12.4 cm]	3-1/2" [8.9 cm]	10.5 [4.8]	11.1 [5.0]
NEMA 145TC	7-3/16" [18.3 cm]	17 15/16" [45.6 cm]	2-3/4" [7.0 cm]	5-1/2" [14.0 cm]	3-1/2" [8.9cm]	10.5 [4.8]	11.1 [5.0]
IEC 63 w/B14 or B5	7-5/8" [19.4 cm]	14-7/8" [37.8 cm]	1-31/32" [5.0 cm]	3-15/16" [10.0 cm]	2-15/32" [6.3 cm]	14.0 [6.4]	15.0 [6.8]
IEC 71 w/B14 or B5	7-5/8" [19.4 cm]	15-13/16" [40.2 cm]	2-7/32" [5.6 cm]	4-13/32" [11.2 cm]	2-25/32" [7.1 cm]	14.0 [6.4]	15.0 [6.8]

Dimensions and weights are for reference only. Weights listed are for pump only; motor not included.
†Varies with motor manufacturer.

finishthompson.com

FINISH THOMPSON INC. - HEADQUARTERS
921 Greengarden Road | Erie, PA 16501
800.934.9384 | ph 814.455.4478 | fx 814.455.8518
email fti@finishthompson.com

FINISH THOMPSON INC. - EUROPE CENTER
Otto-Hahn-Strasse 16 | Maintal, D-63477 Germany
49 (0)6181-90878-0 | fx 49 (0)6181-90878-18
email fti@finishthompson.com

TAG: 20-P-321-1/2/3/4

ProMinent® Sigma/1 Motor-Driven Metering Pumps

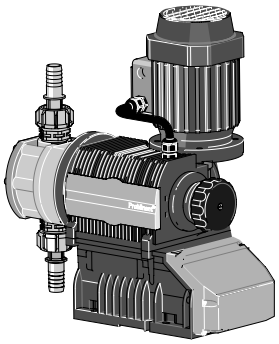

Basic Version (S1Ba HM)

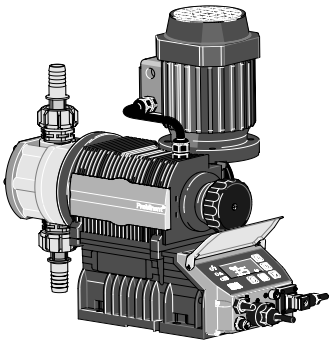

Control Version (S1Ca HM)

Sigma/1 Metering Pumps

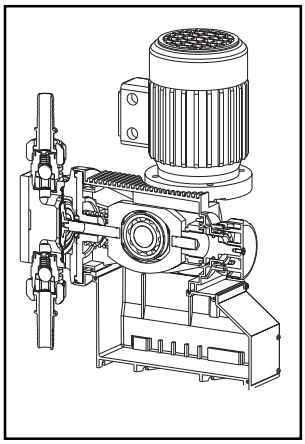

The ProMinent Sigma/1 series pumps are motor driven metering pumps with a mechanically actuated diaphragm-type liquid end (Sigma HM). It is constructed of a corrosion resistant plastic outer housing. The standard materials for the liquid end are PVDF or 316 stainless steel, both with PTFE seals.

Sigma/1 HM pumps are designed with a convex DEVELOPAN diaphragm which seals to a concave curve in the liquid end. This allows for precise metering of media with various viscosities and reduces stress for long diaphragm life. Three gear ratios and two liquid end sizes provide maximum capacities ranging from 5.2 to 38 gph (20 to 144 l/h) (basic) and 5.2 to 31.7 gph (20 to 120 l/h) (control) at maximum backpressures of 174 to 58 psig (12 to 4 bar). The capacity can be infinitely varied in steps of 1% by adjustment of the self-locking stroke length adjusting knob or via an optional stroke positioning motor. Maximum stroke length is 0.16 (4mm). Under defined conditions and with correct installation, the repeatability is better than ± 2% in the stroke length range of between 30 - 100%.

Control Versions

Basic type The Sigma basic version (S1Ba) is suitable for simple metering pump applications. The pump may be operated manually by adjusting the stroke length knob (displacement per stroke). Automatic control of displacement per stroke via a 4-20 mA analog or 3P signal is possible with an optional servomotor. See identity code for motor options.

Control type The Sigma/1 microprocessor controlled metering pump (S1Ca) is supplied with an integral TEFC motor. Pump settings are programmable and viewed on an illuminated LCD. Functions include stroke frequency, batch delivery and external control by pulse or analog signal.

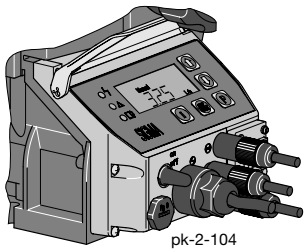

pk-2-104

CE Approved

CSA® Available (standard in Canada)

The Sigma/1 control version features information displays for flow rate (in gph or l/h) and totalized flow (gallons or litres); accumulative stroke count with clear/reset capabilities; and stroke length adjustment displayed in increments of 1%. Three LED lights indicate operating status. Options include a programmable access code, flow monitoring, fault and pacing relays, calibration, timer and 4-20 mA output.

Technical Data: Sigma/1 HM Diaphragm Pumps

Sigma/1 Basic Version

Technical data:	60 Hz (1750 RPM) operation Capacity at Maximum Pressure				Max. Stroke Rate	Output per Stroke	Max. Suction Lift	Max. Suction Pressure		Suction/ Discharge Connector		Shipping Weight w/Motor
Pump Version S1Ba HM	psig	(bar)	U.S. GPH	(L/h)	Stroke/ min.	mL/ stroke	(water) ft. (m)	psig	(bar)	DN	in.	(approx.) lbs. (kg)
12017 PVT	145	(10)	5.2	(20)	88	4	23 (7)	14.5	(1)	10	1/2 MNPT	19.8 (9)
12017 SST	174	(12)	5.2	(20)	88	4	23 (7)	14.5	(1)	10	3/8 FNPT	26.5 (12)
12035 PVT	145	(10)	11.1	(42)	172	4	23 (7)	14.5	(1)	10	1/2 MNPT	19.8 (9)
12035 SST	174	(12)	11.1	(42)	172	4	23 (7)	14.5	(1)	10	3/8 FNPT	26.5 (12)
10050 PVT	145	(10)	15.8	(60)	240	4	23 (7)	14.5	(1)	10	1/2 MNPT	19.8 (9)
10050 SST	145	(10)	15.8	(60)	240	4	23 (7)	14.5	(1)	10	3/8 FNPT	26.5 (12)
10022 PVT	145	(10)	6.8	(26)	88	5.1	19.6 (6)	14.5	(1)	10	1/2 MNPT	19.8 (9)
10022 SST	145	(10)	6.8	(26)	88	5.1	19.6 (6)	14.5	(1)	10	3/8 FNPT	26.5 (12)
10044 PVT	145	(10)	14	(53)	172	5.1	19.6 (6)	14.5	(1)	10	1/2 MNPT	19.8 (9)
10044 SST	145	(10)	14	(53)	172	5.1	19.6 (6)	14.5	(1)	10	3/8 FNPT	26.5 (12)
07065 PVT	102	(7)	20.6	(78)	240	5.1	19.6 (6)	14.5	(1)	10	1/2 MNPT	19.8 (9)
07065 SST	102	(7)	20.6	(78)	240	5.1	19.6 (6)	14.5	(1)	10	3/8 FNPT	26.5 (12)
07042 PVT	102	(7)	13.2	(50)	88	9.7	9.8 (3)	14.5	(1)	15	3/4 MNPT	21 (9.5)
07042 SST	102	(7)	13.2	(50)	88	9.7	9.8 (3)	14.5	(1)	15	1/2 FNPT	29.8(13.5)
04084 PVT	58	(4)	26.7	(101)	172	9.7	9.8 (3)	14.5	(1)	15	3/4 MNPT	21 (9.5)
04084 SST	58	(4)	26.7	(101)	172	9.7	9.8 (3)	14.5	(1)	15	1/2 FNPT	29.8(13.5)
04120 PVT	58	(4)	38	(144)	240	9.7	9.8 (3)	14.5	(1)	15	3/4 MNPT	21 (9.5)
04120 SST	58	(4)	38	(144)	240	9.7	9.8 (3)	14.5	(1)	15	1/2 FNPT	29.8 (13.5)

Sigma/1 Control Version

Technical data:	60 Hz operation Capacity at Maximum Pressure				Max. Stroke Rate	Output per Stroke	Max. Suction Lift	Max. Suction Pressure		Suction/ Discharge Connector		Shipping Weight w/Motor
Pump Version S1Ca HM	psig	(bar)	U.S. GPH	(L/h)	Stroke/ min.	mL/ stroke	(water) ft. (m)	psig	(bar)	DN	in.	(approx.) lbs. (kg)
12017 PVT	145	(10)	5.2	(20)	90	4	23 (7)	14.5	(1)	10	1/2 MNPT	19.8 (9)
12017 SST	174	(12)	5.2	(20)	90	4	23 (7)	14.5	(1)	10	3/8 FNPT	26.5 (12)
12035 PVT	145	(10)	11.1	(42)	170	4	23 (7)	14.5	(1)	10	1/2 MNPT	19.8 (9)
12035 SST	174	(12)	11.1	(42)	170	4	23 (7)	14.5	(1)	10	3/8 FNPT	26.5 (12)
10050 PVT	145	(10)	13.2	(50)	200	4	23 (7)	14.5	(1)	10	1/2 MNPT	19.8 (9)
10050 SST	145	(10)	13.2	(50)	200	4	23 (7)	14.5	(1)	10	3/8 FNPT	26.5 (12)
10022 PVT	145	(10)	6.8	(26)	90	5.1	19.6 (6)	14.5	(1)	10	1/2 MNPT	19.8 (9)
10022 SST	145	(10)	6.8	(26)	90	5.1	19.6 (6)	14.5	(1)	10	3/8 FNPT	26.5 (12)
10044 PVT	145	(10)	14	(53)	170	5.1	19.6 (6)	14.5	(1)	10	1/2 MNPT	19.8 (9)
10044 SST	145	(10)	14	(53)	170	5.1	19.6 (6)	14.5	(1)	10	3/8 FNPT	26.5 (12)
07065 PVT	102	(7)	17.2	(65)	200	5.1	19.6 (6)	14.5	(1)	10	1/2 MNPT	19.8 (9)
07065 SST	102	(7)	17.2	(65)	200	5.1	19.6 (6)	14.5	(1)	10	3/8 FNPT	26.5 (12)
07042 PVT	102	(7)	13.2	(50)	90	9.7	9.8 (3)	14.5	(1)	15	3/4 MNPT	21 (9.5)
07042 SST	102	(7)	13.2	(50)	90	9.7	9.8 (3)	14.5	(1)	15	1/2 FNPT	29.8(13.5)
04084 PVT	58	(4)	26.7	(101)	170	9.7	9.8 (3)	14.5	(1)	15	3/4 MNPT	21 (9.5)
04084 SST	58	(4)	26.7	(101)	170	9.7	9.8 (3)	14.5	(1)	15	1/2 FNPT	29.8(13.5)
04120 PVT	58	(4)	31.7	(120)	200	9.7	9.8 (3)	14.5	(1)	15	3/4 MNPT	21 (9.5)
04120 SST	58	(4)	31.7	(120)	200	9.7	9.8 (3)	14.5	(1)	15	1/2 FNPT	29.8 (13.5)

Wetted Materials of Contruction

Material Code	Liquid end	Suction/Discharge Connectors	Seals	Balls
PVT	PVDF (Polyvinylidene fluoride)	PVDF (Polyvinylidene fluoride)	PTFE/ Viton®	Ceramic
SST	316 Stainless steel	316 Stainless steel	PTFE/ Viton®	SS

Technical Data: Sigma/1 HM Diaphragm Pumps

Diaphragm Failure Indicators

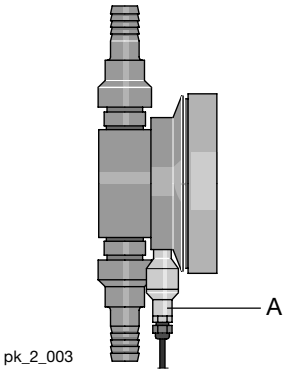

Note: All diaphragm-type motor-driven metering pumps should be installed with a pressure relief valve on the discharge line. See the High-Flow Accessories section of the catalog for pressure relief valves.

Diaphragm Failure Monitor (A)

As an option, the liquid end can be equipped with diaphragm failure monitor. This consists of a PVDF spacer with leak detector positioned between the primary (fluid side) diaphragm and a hermetically sealed backer diaphragm. A normally closed diaphragm-isolated pressure switch (A) opens upon the increase of pressure resulting from main diaphragm failure, based on minimum backpressure of 21 psig (1.5 bar). This offers the distinct advantage that the metered fluid cannot flow uncontrolled out of the pump. The diaphragm failure is signalled on an LCD display and the pump is stopped on S1Ca models, and triggers the optional fault indicating relay. A contact is opened on S1Ba HM models to allow fault annunciation or to stop the pump.

Diaphragm Failure Kits

For conversion of a standard Sigma pump to one with diaphragm failure indication. Includes safety diaphragm, backplate, secondary containment diaphragm and hub, leak detection spacer, leak detection pressure switch assembly, diaphragm, pump head bolts.

50	S1Ba (version 12017, 12035, 10050)	1019846
50	S1Ca (version 12017, 12035, 10050)	1019847
65	S1Ba (version 10022, 10044, 07065)	1019848
65	S1Ca (version 10022, 10044, 07065)	1019849
120	S1Ba (version 07042, 04084, 04120)	1019850
120	S1Ca (version 07042, 04084, 04120)	1019851

ProMinent®

Specifications: Sigma/1

General:

Maximum stroke length:	0.16" (4.0 mm)
Power cord:	6 foot (2 m) 2 wire + ground (supplied on control versions)
Stroke frequency control:	S1Ba: Constant speed or optional DC/SCR drive or AC inverter S1Ca: Microprocessor control version with innovative start/stop and variable speed control proportional to set frequency or external control signal.
Stroke counting:	Standard on S1Ca
Materials of construction *Housing:*	Glass-filled Luranyl™ (PPE)

Wetted materials of construction:

Liquid End:	**PVDF**	**316 SS**
Suct./Dis. Connectors:	PVDF	316 SS
Seals:	PTFE/Viton®	PTFE/Viton®
Check Balls:	Ceramic	SS
Pressure Relief Valves:	PVDF/Viton® O-rings	SS/Viton® O-rings

Drive:	Cam and spring-follower (lost motion)
Lubrication:	Sealed grease lubricated bearings and gearing
Warranty:	Two years on drive, one year on liquid end.
Factory testing:	**Each pump is tested for rated flow at maximum pressure.**
Industry Standard:	CE approved, CSA available (standard in Canada)
Diaphragm materials:	PTFE faced EPDM with Nylon reinforcement and steel core
Liquid end options:	Polyvinylidene Fluoride (PVDF) or 316 SS, with PTFE faced Viton® seals
Check valves:	Single ball check, PVDF and SS versions. Optional springs available (Hastelloy C4)
Repeatability:	When used according to the operating instructions, better than ±2%

Max. fluid operating temperatures:

Material	Constant (Max. Backpressure)	Short Term (15 min. @ max.30 psi)
PVDF	149˚F (65˚C)	212˚F (100˚C)
316 SS	194˚F (90˚C)	248˚F (120˚C)

Diaphragm failure indication:	Optional, see accessories. Switch is N.C., opens to indicate failure. Switch rated 250 VAC, 0.3 A inductive or 0.5 A resistive; 30 VDC,1.0 A resistive. Requires minimum 21 psig (1.5 bar) backpressure on pump. N.O. switch available upon request. Includes double diaphragm leak prevention.
Max. solids size in fluid:	0.3 mm
Stroke length adjustment:	Manual, in increments of 1%. Motorized stroke length adjustment available.

Sigma/1 Basic Version

Motor:	See available motors in identity code

Sigma/1 Control Version

Control Function:	At stroke frequencies equal to or greater than 33%, the integral AC variable frequency drive continuously varies the motor speed in a linear response to the incoming signal. At stroke frequencies less than 33%, the motor starts and stops according to a control algorithm to provide the desired stroke frequency. In the start-stop mode the motor speed is constant at approximately 580 RPM.
Enclosure rating:	NEMA 3 (IP 55)
Motor data:	Totally enclosed, fan cooled (IP55); class F insulation; IEC frame; 1/8 HP (0.09 kW) 230 V, 3 phase (0.7 A)

Specifications cont.

Sigma/1 Control Version (cont)

Relay load	
Fault relay only (options 1 & 3):	Contact load: 250 VAC, 2 A, 50/60 Hz Operating life: > 200,000 switch functions
Fault and pacing relay (options 4 & 5):	Contact load: max. 24 V, AC/DC, max. 100 mA max. $50x10^6$ switch cycles @ 10 V, 10 mA Contact closure: 100 ms (for pacing relay)
Analog output signal:	max. impedance 300 Ω Isolated 4-20 mA output signal
Profibus - DP fieldbus options:	Transfer: RS - 485 Wiring: 2-wired, twisted, shielded Length: 3637 ft. (1200 m)/328 ft. (100 m) Baudrate: 9600 bits/s; 12 Mbits/s No. of participants: 32 with 127 repeaters Topology: Line Access procedure: Master/master with token ring
Relay cable (optional):	6 foot (2 m) 3 wire (SPDT) 250 VAC, 2 A
Pulse contact/remote pause contact:	With voltage-free contact, or semiconductor sink logic control (not source logic) with a residual voltage of <700 mV. The contact load is approximately 0.5 mA at + 5 VDC. (*Note*: Semiconductor contacts that require >700 mV across a closed contact should not be used).
Max. pulse frequency:	25 pulses/sec
Contact impedance:	10 kOhm
Max. pulse memory:	65,535 pulses
Necessary contact duration:	20ms
Analog - current input burden:	Approximately 120 Ohm
Max. allowable input current:	50 mA
Power requirements:	Single phase, 115-230 VAC ± 10%, 50/60 Hz

ProMinent®

Data required to size metering pumps and accessories

Complete this data sheet and fax it to ProMinent Pittsburgh at (412) 787-0704 or ProMinent Canada at (519) 836-5226 for a review of the system hydraulics and recommendations on pump and accessory selection.

Desired capacity min./max.	GPH (l/h)_____
Available power supply	_____V, _____ Hz, _____ phase
Working temperature min./max.	°F (°C)_____
Description of process fluid	_____
Concentration %	_____
Solids content %	_____
Absolute viscosity, cP	_____
Vapor pressure at working temperature	psig (bar) _____
Remarks (e.g. abrasive, developing gases and fumes, flammable, corrosive)	_____ _____

Suction conditions:

Suction lift min./max., or	ft. (m) _____
Positive suction head min./max., or	ft. (m)_____
Pressure in chemical tank	psig (bar)_____
Length of suction line	ft. (m) _____
Size (I.D.) of suction line	in. (mm)_____
Number of valves and fittings in suction line	_____

Discharge conditions:

Back-pressure min./max.	psig (bar) _____
Discharge head min./max.	ft. (m) _____
Negative discharge head min./max.	ft. (m) _____
Length of discharge line	ft. (m) _____
Size (I.D.) of discharge line	in. (mm)_____
Number of valves and fittings in discharge line	_____

System sketch

Identity code: Basic Version Sigma/1 HM (S1Ba)

Series:
S1Ba Sigma/1 Basic Version a

H Main Drive, Diaphragm

Pump version:

12017*	07042
12035*	04084
10050	04120
10022	
10044	
07065	

* For PVDF versions. Max. 145 psig
Note: Refer to technical data for capacities and stroke rates

Liquid end material:
PV PVDF
SS 316 Stainless steel

Seal material:
T PTFE/Viton® seal
Viton® is a registered trademark of DuPont Dow Elastomers

Diaphragm type:
0 Standard diaphragm
1 With double diaphragm and failure monitor (NC contact opens on fault)

Liquid end version:
0 Without valve springs
1 With 2 valve springs (Hastelloy C4, 1 psig)

Connectors:
7 PVDF clamping nut & insert
8 SS clamping nut & insert

Labeling:
0 Standard with logo

Motor mount:
S 3 ph, 230 V/400 V, 50/60 Hz
M 1 ph, AC, 230 V, 50/60 Hz
N 1 ph, AC, 115 V, 60 Hz
K 90 VDC Permanent magnet

Enclosure rating:
0 Standard

Stroke sensor:
0 Without stroke sensor (Standard)
2 With Pacing relay (Consult Factory)

Stroke length adjustment:
0 Manual (Standard)
1 With 3P stroke positioning motor, 230 V 50/60 Hz
2 With 3P stroke positioning motor, 115 V 50/60 Hz
4 W/ stroke positioning motor 4 - 20 mA, 230 V 50/60 Hz
6 W/ stroke positioning motor 4 - 20 mA, 115 V 50/60 Hz

S1Ba	**H**	**10044**	**PV**	**T**	**0**	**0**	**7**	**0**	**2**	**0**	**0**	**0**

Dimensions: Sigma/1 HM Basic (S1Ba)

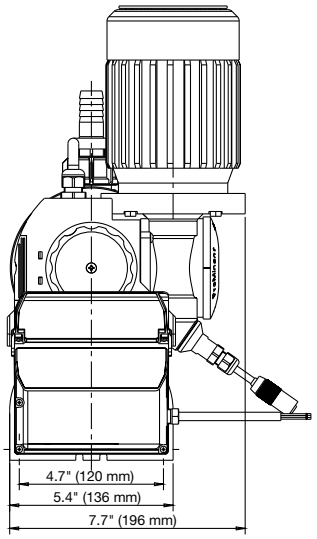

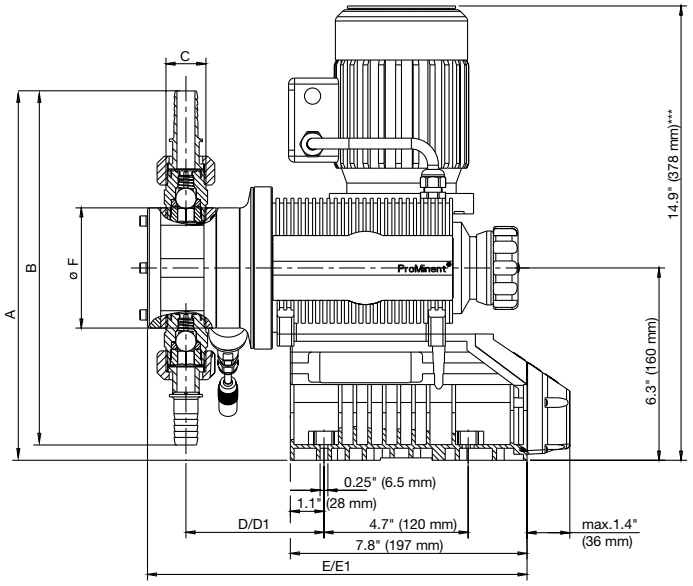

Dimensions in inches (mm)

Type Sigma/1	A	B	Suction/ Discharge Valve Thread C*	D	D1**	E	E1**	F
12017, 12035, 10050, 10022, 10044, 07065 PVT	11 (279)	9.38 (238)	1/2" MNPT	3.54 (90)	4.33 (110)	10.8 (275)	11.6 (295)	3.8 (96)
SST	9.75 (248)	7.13 (181)	3/8" FNPT	3.5 (89)	4.29 (109)	10.8 (275)	11.6 (295)	3.8 (96)
07042, 04084, 04120 PVT	11.38 (289)	10 (254)	3/4" MNPT	3.74 (95)	4.52 (115)	11.2 (285)	12 (305)	4.8 (122)
SST	10.25 (260)	8.13 (206)	1/2" FNPT	3.7 (94)	4.48 (114)	11.2 (285)	12 (305)	4 .8 (122)

* Piping adapters provided according to technical data.
** Dimensions with diaphragm failure detector.
*** Dimension may vary depending on motor installed.

ProMinent® Sigma/1 Motor-Driven Metering Pumps Control Version S1Ca

Sigma/1 Control Version



The microprocessor-based electronics for the Sigma/1 control version are the same as the Sigma/2 and Sigma/3 metering pumps. Programming functions enable the user to set and retrieve pertinent information easily.

- flow can be set and displayed in either U.S. gph or l/h
- totalized flow is displayed in gallons or litres
- accumulative stroke counter is displayed
- optional access code can be programmed to prevent unauthorized adjustment to settings
- three LED lights indicate operational status

The S1Ca pump is available with contact and 4-20 mA analog signal control.

Optional monitoring indicators include

- fault annunciating relay for low tank level, loss of flow, system faults and fuse/power supply failure, loss of analog signal, diaphragm rupture
- pacing relay to pace a second pump or totalize flow with an external stroke counter
- Profibus field bus connection for remote monitor and control

Pumps can also be ordered with a diaphragm failure monitor.

ProMinent®

Sigma/1 Microprocessor Control Standard Control Modes and Functions

Feed rate is determined by stroke length and stroke rate. Stroke length is manually adjustable from 1 to 100% in increments of 1% via the stroke length knob.

Stroke rate can be set to a maximum of 90, 170 or 200 strokes per minute (pump dependent). An illuminated LCD displays stroke length, stroke rate and an accumulative stroke counter, which can be cleared and reset.

Pump capacity output is displayed in either U.S. gph or l/h, set by the operator. Output is accumulated and totalized capacity is also displayed in either U.S. gallons or litres.

The “i” key is used to scroll information screens for stroke rate, stroke length, stroke counter, capacity and totalized capacity. Other information is available depending on control mode.

Control Modes

The control modes available with the Sigma/1 include manual, external contact with pulse control (multiplier/divider), batch, or analog control. The Profibus option includes all control modes, plus fieldbus connection.

In the “Manual” mode, stroke rate is controlled manually. The “Contact” external mode allows adjustments to be made externally (e.g. by means of a pulse-type water meter for proportional chemical feed). Pulse signals are fed into the contact input of the pump by an optional control cable. Each pulse from a water meter or pulse-type controller provides the pump an input to pump at the selected pulse ratio, up to the pump's maximum stroke rate. Over-stroking the pump is not possible.

Standard Functions

“Calibrate”

The pump can be directly calibrated in-line to actual flow. Calibration is maintained within the stroke frequency range of 90/170/200 spm (model dependent). A warning indicator flashes when adjustments to the stroke volume are made outside the calibrated range of +/- 10%.

“Auxiliary Frequency”

An auxiliary frequency can be programmed. This default stroking rate can be enabled via the optional control cable.

“Flow”

The Sigma/1 series metering pumps will monitor their own output, with an optional adjustable flow monitor. Every fluid discharge is sensed and fed back to the electronic control circuit of the pump. If insufficient fluid is discharged for a predetermined number of strokes (up to 125), the pump automatically stops and the red LED lights. The optional fault relay changes state to issue an alarm or activate a standby pump. Call for availability.

“Float Switch”

An optional two-stage ProMinent float switch can be plugged into the pump to monitor chemical tank levels. An early warning is issued when the allowable minimum level is reached. The pump continues to operate while the display flashes, the yellow LED lights and an optional collective fault relay changes state to issue an alarm. If the liquid level in the supply tank drops another 3/4" (20 mm), the pump automatically shuts down, the LCD displays “Minim” and the red LED lights. The optional fault relay remains activated.

“Pause”

The Sigma/1 series can be remotely started and stopped via a dry contact through the optional control cable.

“Stop”

The Sigma/1 can be stopped by pressing the STOP/START key without disconnecting from the power supply.

“Prime”

Priming is activated by pressing both arrow keys at the same time while the frequency display is showing.

Function and Error Indicators

Three LED lights on the pump faceplate signal operational status. The green light flashes during normal operation, and the yellow light warns of a situation that could lead to a fault (e.g. low chemical). If a fault occurs “error” will appear on the LCD screen and the red LED light appears.

Sigma/1
Optional Control Modes and Features

Optional Control Modes

"Analog" Mode

With this option, the stroking rate of the Sigma/1 is directly proportional to the analog signal. For a custom range setting, the curve feature of the analog input can be selected. With this, the pump response to the analog input can be easily programmed.

"Contact" Mode with Pulse Control

This feature is used to "tune" the pump to contact generators of any kind (e.g. pulse-type water meter or process controller), and eliminate the need for a costly external control unit. The following functions can be selected by means of the keypad.

Pulse step-up (multiply) and step-down (divide)

By simply entering a factor in the 0.01-99.99 range, the step-up or step-down ratio is set.

For example:

Step-up Factor:
99.99 1 pulse = 99.99 pump strokes
10 1 pulse = 10 pump strokes

Step-down Factor:
0.25 4 pulses = 1 pump stroke
0.01 100 pulses = 1 pump stroke

"Batch" Mode

The Batch mode is a variation of the contact operating mode. A number of strokes can be predetermined up to 65,535 strokes (whole numbers) or the feed quantity can be predetermined. The batch is then initiated by either pressing the "P" key on the pump face or providing a contact to the external control cable.

Access Code

A programmable access code to prevent unauthorized changes to settings is available as an option.

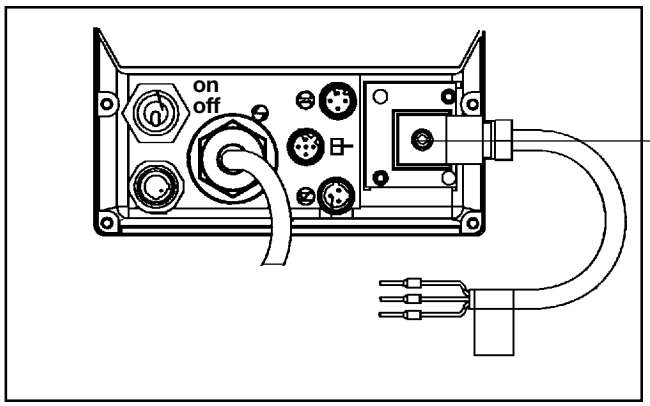

An external panel enables optional relays to be installed on-site.

Relay outputs. . .

Fault annunciating relay

For low tank level (flow switch), loss of flow (flow monitor), loss of analog signal and diaphragm rupture monitor, system faults and fuse/power supply failure.

Fault annunciating and Pacing relay

In addition to the fault annunciating relay, a contact closure is issued with every pump stroke (contact duration 150 ms). This allows a second ProMinent metering pump to be paced synchronously, or to totalize flow with an external stroke counter.

4-20 mA Analog Output

A 4-20 mA analog output option is available for use with pumps that operate in the manual mode or by a remote 4-20 mA analog reference signal. The 4-20 mA analog output signal is linear to pump frequency multiplied by the percentage of stroke length. The output signal is isloated and can drive up to 300 Ohms impedance. Analog output can be used for status feedback to higher level control systems for closed loop control or for monitoring chemical usage. This option is available in combination with either the fault annunciating or pacing relay.

Timer Relay

The optional integrated 2-week timer offers 81 programmable events. It can be set to hourly, daily, work days, weekend, weekly or two-week periods with switch-on times from 1 second to two weeks. The timer can be programmed to change operation mode, frequency and the function of two relays. All the functions can be programmed independently of one another. Up to 13 delay times can be programmed into the timer function.

The range of applications exceeds that of a "standard timer". Typical application is disinfection in cooling towers, process water, etc. with the ability to automatically program shock dosages or increase the concentration at a certain interval.

Fieldbus connection

Monitor and control remotely via a SCADA/PLC system using the profibus-DP system.

Note: Relay options not available with profibus. Profibus is not field retrofittable.

Identity code: Control Version Sigma/1 HM (S1Ca)

ProMinent®

Series:

S1Ca — Sigma/1 Control Version a

Main drive

H — Main drive/Diaphragm

Pump version:

12017*	10022	07042
12035*	10044	04084
10050	07065	04120

*For PVDF versions, max. 145 psig

Note: Refer to technical data for capacities and stroke rates

Liquid end materials:

PVT — PVDF with PTFE/Viton® seal

SST — 316 Stainless steel with PTFE/Viton® seal

Viton® is a registered trademark of DuPont Dow

Diaphragm type:

0 — Standard diaphragm, PTFE

1 — With double diaphragm and failure monitor (NC contact opens on fault)

2 — With double diaphragm and failure monitor (alarm & continues to operate)

Liquid end version:

0 — Without valve springs

1 — With 2 valve springs (Hastelloy C4, 1.45 psig)

Connectors:

7 — PVDF clamping nut & insert

8 — SS clamping nut & insert

Labeling:

0 — Standard with logo

Voltage supply:

U — 1 ph, 115-230 V ± 10%, 50/60 Hz

Cable and plug with 6 ft (2 m) power cord, single phase:

A — European plug, 230 V

D — N. American plug, 115 V

U — N. American plug, 230 V

Relay:

0 — Without relay

1 — Fault annunciating relay, drops out

3 — Fault annunciating relay, pulls in

4 — Option 1 + pacing relay

5 — Option 3 + pacing relay

C — 4-20 mA output, drops out

D — 4-20 mA output, pulls in

E — 4-20 mA output, pacing relay

Control variants:

0 — Manual + External with pulse control (multiplier/divider)

1 — Manual + External with pulse control & analog control

4 — Option 0 + timer

5 — Option 1 + timer

P — Option 1 + Profibus (Relay must be 0)

Access code:

0 — No access code

1 — Access code

Flow monitor:

0 — Input for metering monitor signal (pulse)

1 — Input for maintained flow switch signal

Stroke length adjustment:

C — Manual + Calibration

S1Ca	H	07042	PVT	0	0	7	0	U	D	0	0	0	0	C

Dimensions: Sigma/1 HM Control (S1Ca)

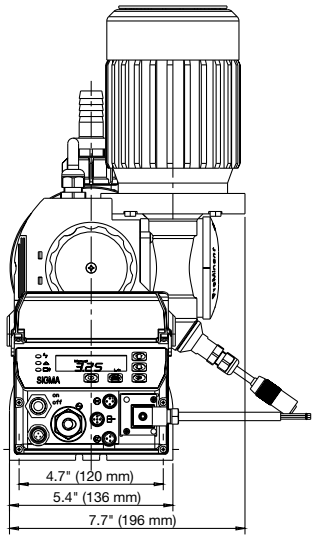

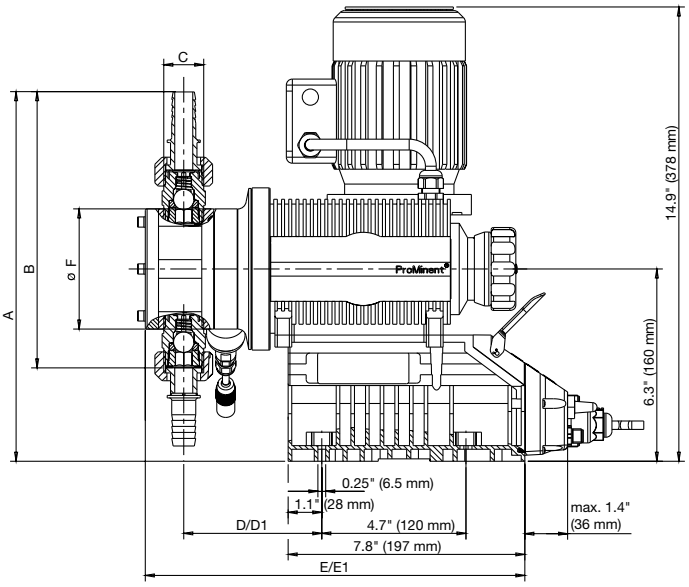

Dimensions in inches (mm)

Type Sigma/1	A	B	Suction/ Discharge Valve Thread C*	D	D1**	E	E1**	F
12017, 12035, 10050, 10022, 10044, 07065 PVT	11 (279)	9.38 (238)	1/2" MNPT	3.54 (90)	4.33 (110)	10.8 (275)	11.6 (295)	3.8 (96)
SST	9.75 (248)	7.13 (181)	3/8" FNPT	3.5 (89)	4.29 (109)	10.8 (275)	11.6 (295)	3.8 (96)
07042, 04084, 04120 PVT	11.38 (289)	10 (254)	3/4" MNPT	3.74 (95)	4.52 (115)	11.2 (285)	12 (305)	4.8 (122)
SST	10.25 (260)	8.13 (206)	1/2" FNPT	3.7 (94)	4.48 (114)	11.2 (285)	12 (305)	4 .8 (122)

* Piping adapters provided according to technical data.
** Dimensions with diaphragm failure detector.

ProMinent® Sigma/1
Metering monitor

Description	Part No.

Metering monitor

Adjustable metering monitor “Flow Control”

For S1Ca HM with connection cable for assembly directly to liquid end.

Monitors individual strokes according to the float and orifice principle. The partial quantity of chemical flowing past the float is adjusted from the total stroke volume via the adjusting screw so that an alarm is actuated if there is no pump flow. The user can select the number of incomplete strokes permitted (between 1 and 125) in accordance with the actual process requirements.

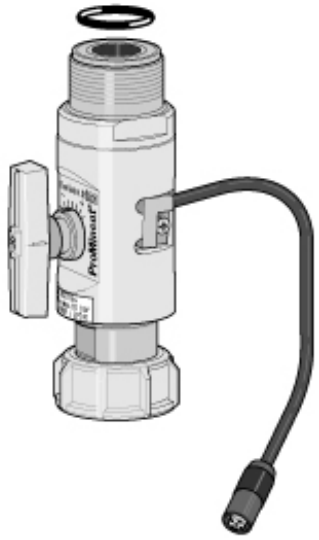

Materials:

Flow meter:	PVDF
Float:	PTFE-coated
Seals:	Viton® B/EPDM

Call for details.

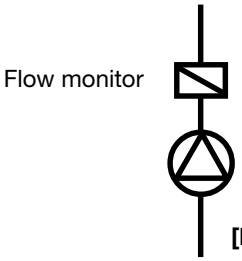

[For use with low-viscosity (water-like) fluids only].

ProMinent® Sigma/1
Control cables

Description	Part No.

External control cables

Universal control cable

For metering pump control via contact closure (pulse), standard process signal (analog), and voltage-free contact for remote pause control and auxiliary frequency.

For Sigma pumps with 5-pole round plastic connector and 5-wire cable with loose end.

Universal control cable, 5-pole round connector, 5-wire, 6 ft. (2 m)	1001300
Universal control cable, 5-pole round connector, 5-wire, 16.4 ft. (5 m)	1001301
Universal control cable, 5-pole round connector, 5-wire, 32.8 ft. (10 m)	1001302

ON/OFF Control (Pause)

BROWN and BLACK wires must be connected together via an ON/OFF contact or shorted together. When the contact is closed between the BLACK & BROWN wires, the pump will run. When the contact is open, the pump will stop.

Note: If ON/OFF control is the only control feature being used, WHITE, BLUE & GREY wires are not used and should be cut back.

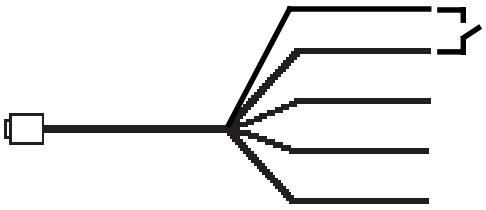

BROWN: Remote On/Off (+) (Pause)

BLACK: Common

GREY: Auxiliary Frequency

WHITE: Pulse (+)

BLUE: Analog (+)

Pulse Control

Pulse control will allow the pump to run in proportion to a pulsing potential free contact closure.

Note: BROWN and BLACK wires have to be connected together via an ON/OFF contact or shorted together. GREY wire is not used and should be cut back.

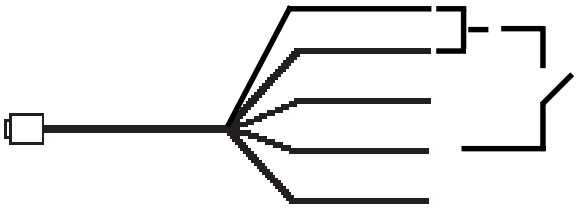

BROWN: Remote On/Off (+) (Pause)

BLACK: Common

GREY: Auxiliary Frequency

WHITE: Pulse (+)

BLUE: Analog (+)

ProMinent® Sigma/1
Control cables

Description	Part No.

External control cables

Analog Control

Analog control runs in proportion to an analog signal (4- 20 mA).

Note: BROWN and BLACK wires must be connected together via an ON/OFF contact or shorted together. The BLACK wire is negative and the BLUE wire is positive. GREY wire is not used and should be cut back.

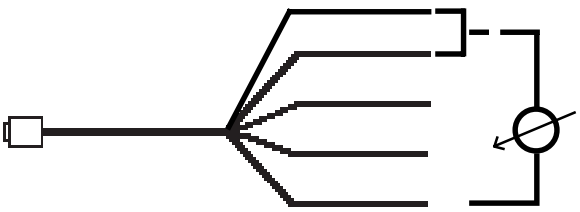

BROWN: Remote On/Off (+) (Pause)

BLACK: Common

GREY: Auxiliary Frequency

WHITE: Pulse (+)

BLUE: Analog (+)

Auxiliary Frequency

Auxiliary frequency will allow the pump to default to a predetermined stroking frequency regardless of which operating mode the pump is in. The pump defaults to this stroking frequency as long as a contact is closed between the black and grey wires of the universal control cable.

Note: BROWN and BLACK wires must be connected together via an ON/OFF contact or shorted together.

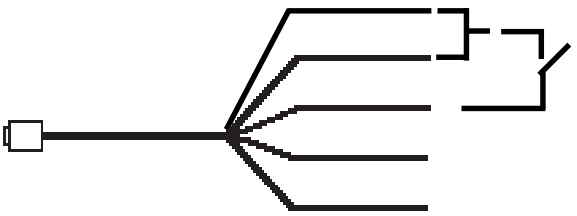

BROWN: Remote On/Off (+) (Pause)

BLACK: Common

GREY: Auxiliary Frequency

WHITE: Pulse (+)

BLUE: Analog (+)

ProMinent Sigma/1
Spare Parts

Spare Parts and Liquid Ends

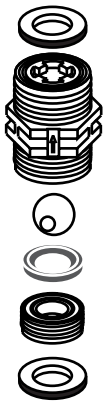

Valve Complete

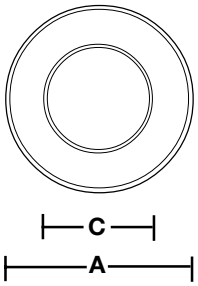

Liquid End	Dim A (mm)	Dim C (mm)
FM 50	70	32
FM 65	70	37
FM 120	86.5	51

Complete liquid ends include pump head, valves, mounting screws, diaphragm and backplate. Clamping nuts and inserts are not included with complete liquid ends, complete valves or spare parts kits (see the High Flow Accessories section for these parts). Spare parts kits include:

PVT Liquid ends
1 Diaphragm
1 Suction valve
1 Discharge valve
2 Valve balls
1 Set of seals

SST Liquid ends
1 Diaphragm
2 Valve balls
1 Set of seals

Material Code	Liquid End Complete	Spare Parts Kit	Valve Complete	Diaphragm
12017, 12035, 10050 with Liquid end FM 50				
PVT	1010560	1010541	1002267	1010279
SST	1010561	1010555	809459	1010279
SST*		1010554		1010279
10022, 10044, 07065 with Liquid end FM 65				
PVT	1010562	1010542	1002267	1010282
SST	1010563	1010557	809459	1010282
SST*		1010556		1010282
07042, 04084, 04120 with Liquid end FM 120				
PVT	1010565	1010543	792517	1010285
SST	1010566	1010559	809404	1010285
SST*		1010558		1010285

* Without valves

((THIS IS A MASTER, EDIT FOR SPECIFIC APPLICATION))
PROMINENT FLUID CONTROLS, INC. - SIGMA/1 HM (for flow rates from 5 to 38 gph)

PART 1 - GENERAL

1.1 GENERAL

A. This specification covers the supply, installation, and testing of a complete functional metering pump system including all accessories and appurtenances as shown on the drawings and described herein. A single chemical metering pump manufacturer shall be responsible for supplying all components of the metering feed system.

1.2 QUALITY ASSURANCE

A. For the purpose of establishing quality assurance, experience, and system reliability, the products described herein are based on those metering pumps manufactured by ProMinent Fluid Controls, Inc. All pumps shall be shop-tested for capacity at rated pressure prior to shipment, with documented results provided.

1.3 WARRANTY

A. The chemical metering pump manufacturer shall provide a two year warranty on the metering pump mechanical drive and one year on the liquid end.

PART 2 - PRODUCTS

2.1 GENERAL

A. Manufacturers:
   1. ProMinent Fluid Controls, Inc.
   2. Pre-approved equal.

2.2 DESCRIPTION

A. The chemical metering pump shall be a simplex, motor-driven, reciprocating, mechanically-actuated diaphragm type. The pump shall include integral motor, permanently lubricated gear reducer, cam-and-spring drive mounted and sealed in a non-corrosive plastic outer, with heat sinks for cooling.
B. The power supply shall be ___VAC, ___Hz, ___Phase.
C. The liquid end shall be physically separated from the drive unit by a back plate with weep hole creating air gap separation. An elastomer shaft wiper seal shall prevent contamination of the gear box by confining chemical within the back plate if the primary diaphragm fails. The primary diaphragm shall have a steel core, vulcanized into a nylon-reinforced EPDM backing, with PTFE-faced fluid contact surface.
D. ((OPTIONAL)) The liquid end shall also feature a secondary diaphragm separated from the primary diaphragm by a spacer plate with diaphragm-isolated pressure switch to close a contact for alarm annunciation and to prevent chemical spill or intrusion into pump drive upon failure of the primary diaphragm.

2.3 LIQUID END

A. The diaphragm shall be of a convex design fitting into a concave liquid end to minimize diaphragm wear, liquid end dead volume, and to promote flow of solids in suspension.

((SELECT ONE))

- The liquid end shall be virgin PVDF. The suction and discharge valve shall be PVDF with PTFE faced Viton gasket seals and ceramic valve balls.

Or

- The liquid end shall be 316 stainless steel. The suction and discharge valves shall be 316 stainless steel with PTFE-faced Viton gasket seals and stainless steel valve balls.

2.4 CONTROL ((BASIC VERSION PUMP))

A. Stroke length control of the basic version pump
((SELECT ONE))

- shall be adjustable manually by means of a stroke length knob, in increments of 1.0%, from 0% to 100% of stroke length.

Or

- shall be adjustable by means of a stroke positioning motor from 0% to 100% of stroke length. The stroke positioning motor shall feature visual stroke length indication and manual/ external selector switch for local control via toggle switch or external control in proportion to a 4-20 mA signal.

B. Stroke frequency control of the basic version pump
((SELECT ONE))

- shall be fixed at the pump's maximum stroke rate. Pump shall include a 1/8 HP, TEFC, four-pole AC motor.

Or

- shall be controlled by DC SCR drive system for stroke frequency control. The SCR shall include a wall mountable NEMA 4 enclosure with on/off switch, manual/external switch and speed potentiometer. The DC voltage output to the motor shall be proportional to the potentiometer setting in manual mode, or proportional to an external 4-20 mA signal in external mode. Pump shall include a 1/8 HP, TENV, permanent magnet 90V DC motor.

Or

- shall be controlled by an AC inverter system for stroke frequency control. The inverter shall include a wall mountable NEMA 4/12 enclosure with keypad and display of % load or output voltage. Selectable for local or remote operation via 4-20 mA signal. Pump shall include a 1/8 HP, inverter duty, 3-phase, 208-230 VAC motor. Minimum speed 3-30 Hz.

2.5 PROGRAMMING AND CONTROL ((CONTROL VERSION PUMP))

A. The metering pump shall be microprocessor-controlled. All pumping functions shall be set by membrane-switch keypad and status shall be displayed on an illuminated LCD, which is readable at an offset of 45 degrees. Keypad will allow for simple scrolling of programmed parameters.

B. Stroke length control shall be adjustable manually by means of a stroke length, in increments of 1.0%, from 0 to 100% of stroke length. The LCD shall digitally display stroke length in 1% increments in the full range between 100% and 0%.

C. Programming shall allow pump to be calibrated so as to display pump output in gallons/hour or liters/hour. Calibration shall be maintained when stroke length is altered up to plus or minus 10% on the stroke length knob. If stroke length is altered by more than +/-10%, a yellow warning light will light and a flashing message "calib" will appear.

D. The pump shall be equipped with the programmable function of electronic interlocking of the keypad by access code to prevent unauthorized adjustments to the pump.

E. Keypad shall allow for scrolling and display on LCD such parameters as stroke frequency, stroke length, stroke counter, pump output in gals/hr or l/hr, dosing quantity, mA input being received by pump, and indication of external mode.

F. An AC inverter shall be integral to the microprocessor control and function of the pump. While 115VAC or 230VAC, 1 phase may be used to power the pump, the inverter shall drive a 1/8 HP, 230VAC, 3 phase motor. Stroke frequency shall be accomplished through microprocessor control with proportional start/stop of the motor, from 0% to 33% of stroke rate. Stroke rate shall be accomplished through variable speed of the motor from 34% to 100% of stroke rate. Stroke frequency control shall be manually adjusted by touch keypads, with the set stroke rate displayed on the LCD. The pump shall be capable of receiving a pulse input via optional external control cable such that one pulse gives one pump stroke rate. The pump shall be capable of remote ON-OFF operation using the pause function via a voltage free contact relay through an optional control cable. In addition, the pump shall be configured with;

((OPTIONAL SELECTIONS))

- pulse multiplier/divider functionality. The pump shall allow factoring to issue from 1 to 99.99 strokes per pulse input or to issue 1 stroke per 1 to 100 input pulses.

Or

- analog input functionality. The pump shall accept an analog signal such that stroke frequency is proportional to 0/4-20mA or 20-4/0mA, the choice of which is programmed at the pump. The pump shall allow the setting of a maximum stroke rate, which corresponds to the maximum analog signal, with stroke rate proportional to signal strength below that rate. Programming for curve processing shall also be possible, in which any stroke frequency ratio in proportion to the electrical signal can be configured. Analog to digital converters external to the pump shall not be acceptable.

Or

- pulse multiplier/divider and analog input functionality. The pump shall allow factoring to issue from 1 to 99.99 strokes per pulse input or to issue 1 stroke per 1 to 100 input pulses. The pump shall also accept an analog signal such that stroke frequency is proportional to 0/4-20mA or 20-4/0mA, the choice of which is programmed at the pump. The pump shall allow the setting of a maximum stroke rate, which corresponds to the maximum analog signal, with stroke rate proportional to signal strength below that rate. Programming for curve processing shall also be possible, in which any stroke frequency ratio in proportion to the electrical signal can be configured. Analog to digital converters external to the pump shall not be acceptable.

Or

- programmable timer functionality. The pump shall be configured with an integral, programmable 2-week, 81 event timer to change operational state of the pump. Timers external to the metering pump are not acceptable.

Or

- pulse multiplier/divider, analog input, and programmable timer functionality (as described above).

G. The pump shall be equipped with the programmable function of auxiliary frequency control, allowing for quick priming of the pump or for slug feed of process during initial start up after shutdown. Stroke frequency shall be programmable to the maximum for the pump, and the auxiliary frequency function shall be capable of interfacing with a contact closure relay for control purposes.

2.6 FLOW ASSURANCE ((OPTIONAL))

A. Low Level Control - A 2-stage Float Switch shall be supplied to stop the pump prior to losing prime and annunciate low level on the pump LED.

B. Relay Output - An SPDT relay shall be installed on the pump for:

((SELECT ONE))

- fault indication. ((OPTIONAL)) The metering pump shall have an integral relay to allow remote annunciation of a fault condition (i.e. low supply solution early warning/lack of supply solution shut down, loss of chemical output, system faults, and fuse/power supply failure). Configure as ((N/O//N/C)) contact closure relay.

Or

- both fault indication and pacing relay. ((OPTIONAL)) The metering pump shall have an integral relay to allow remote annunciation of a fault condition (i.e. low supply solution early warning/lack of supply solution shut down, loss of chemical output, system faults, and fuse/power supply failure). Configure as ((N/O//N/C)) contact closure relay. The pump shall also have an integral relay to issue a contact closure with every pump stroke to pace a second metering pump. The pacing relay shall be electrically isolated via an optical coupler with a semiconductor switch.

Or

- both 4-20mA output and fault indication. ((OPTIONAL)) The analog output function shall be a multiplicative factor of both stroke length % and stroke frequency %, reflecting the real time output capacity of the metering pump. The metering pump shall also have an integral relay to allow remote annunciation of a fault condition (i.e. low supply solution early warning/lack of supply solution shut down, loss of chemical output, system faults, and fuse/power supply failure). Configure as ((N/O//N/C)) contact closure relay.

Or

- both 4-20mA output and pacing relay. ((OPTIONAL)) The analog output function shall be a multiplicative factor of both stroke length % and stroke frequency %, reflecting the real time output capacity of the metering pump. The pump shall also have an integral relay to issue a contact closure with every pump stroke to pace a second metering pump. The pacing relay shall be electrically isolated via an optical coupler with a semiconductor switch.

2.7 ACCESSORIES ((ALL ARE OPTIONAL AND MAY BE INCLUDED AS SEPARATE ITEMS OR AS COMPONENTS OF A PUMP STAND))

A. The pump shall be mounted on a ((CHOOSE ONE: black, UV-protected polypropylene// 304 stainless steel//FRP grating)) support stand suitable for wall, floor or top-of-tank mounting. A single chemical metering pump manufacturer shall be responsible for supplying and assembling all components of the skid, in addition to testing the skid-mounted metering system under conditions of maximum rated pump pressure, prior to shipment. The stand shall include the following accessories, pre-piped;

B. A foot valve and strainer shall be provided with each pump.

C. An injection check valve shall be provided with each pump.

D. A universal control cable with 5-pole round plastic connector and 5-wire cable with loose ends shall be provided with each pump.

E. A two stage float switch compatible with the chemical metering pump shall be provided for monitoring tank level.

F. An adjustable discharge flow monitoring device mounted on a valved bypass shall be provided. The flow monitor shall be capable of signaling a fault condition to the metering pump.

G. A diaphragm failure detector shall be provided to ((open/close)) a contact in the event of diaphragm failure.
H. An adjustable-pressure, diaphragm-type back pressure/antisiphon valve shall be provided with each metering pump.
I. An in-line, adjustable-pressure, diaphragm-type pressure relief valve shall be provided with each metering pump.
J. An air-charged, bladder-type pulsation dampener shall be provided with each metering pump.
K. A clear PVC calibration column with FNPT fittings top and bottom shall be provided with each pump//skid.

2.8 APPLICATION

A. Quantity:
B. Chemical Service:
C. Capacity (U.S. gph):
D. Back Pressure (psig):

END OF SECTION

PN: 1061538

PROMINENT METERING PUMP:

MODEL: _____

CAPACITY RATED: _____L/h (_____USGPH) @ _____kPag (_____ PSI);

MAX PROCESS FLOW REQUIRED: _____ L/h (_____ USGPH) @ _____ kPag (_____ PSI)

LIQUID END MATERIAL: _____

TERMINATION POINT SCHEDULE		
TP	SERVICE	CONNECTION
01	SUCTION	1-1/2" SW OR FNPT, PVC
02	DISCHARGE	1-1/2" SW OR FNPT, PVC
03	CALIBRATION COLUMN VENT BACK TO TANK	1-1/2" SW OR FNPT, PVC
04	P.R.V. VENT BACK TO TANK	1-1/2" SW OR FNPT, PVC

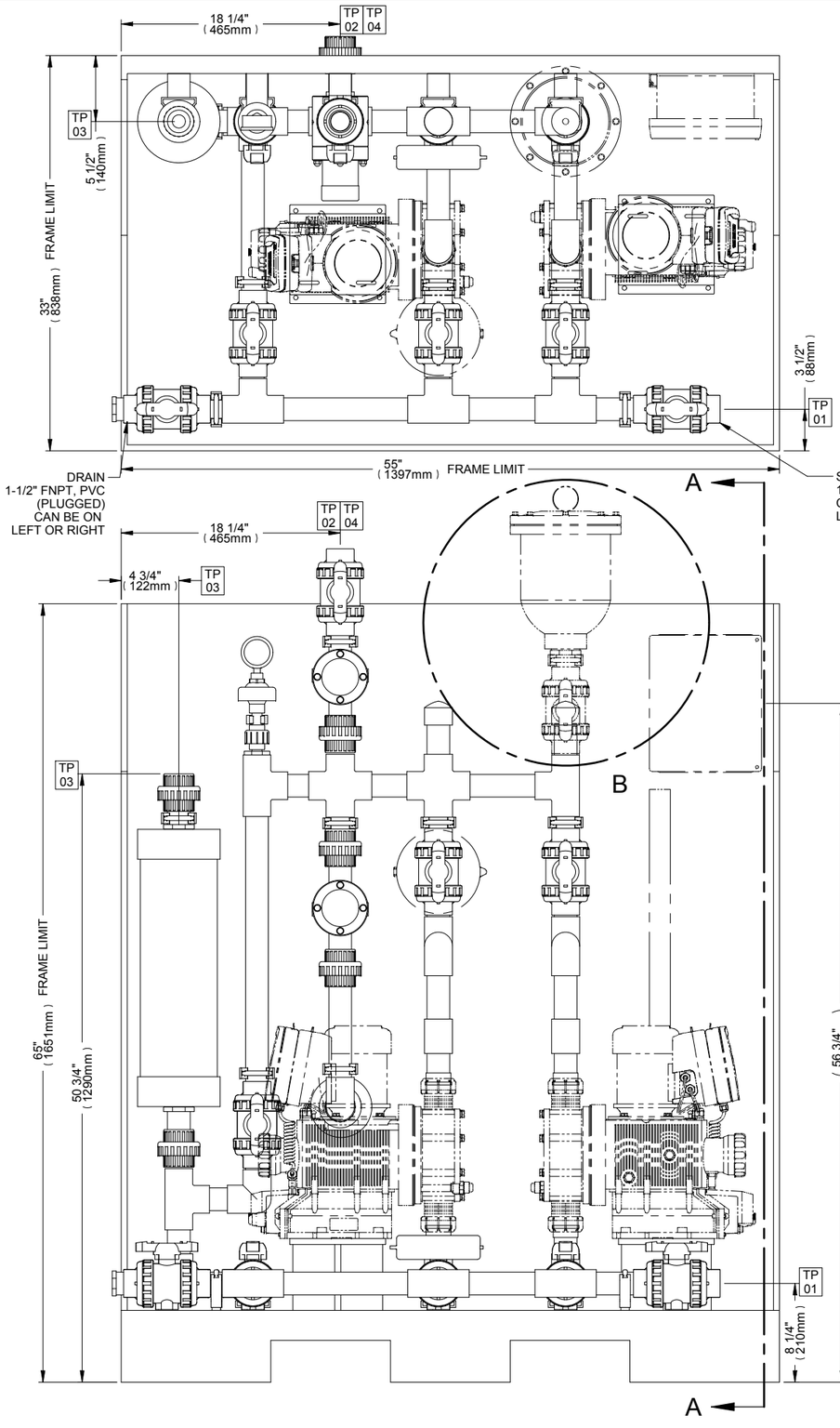

TAG:
15-P-301-A/B
15-FQI-301
15-HV-300
15-HV-313
15-HV-312
15-HV-322
15-HV-323
15-HV-311
15-HV-321
15-PSV-310-1
15-PSV-320
15-HV-302
15-HV-320
15-HV-301
15-PCV-301

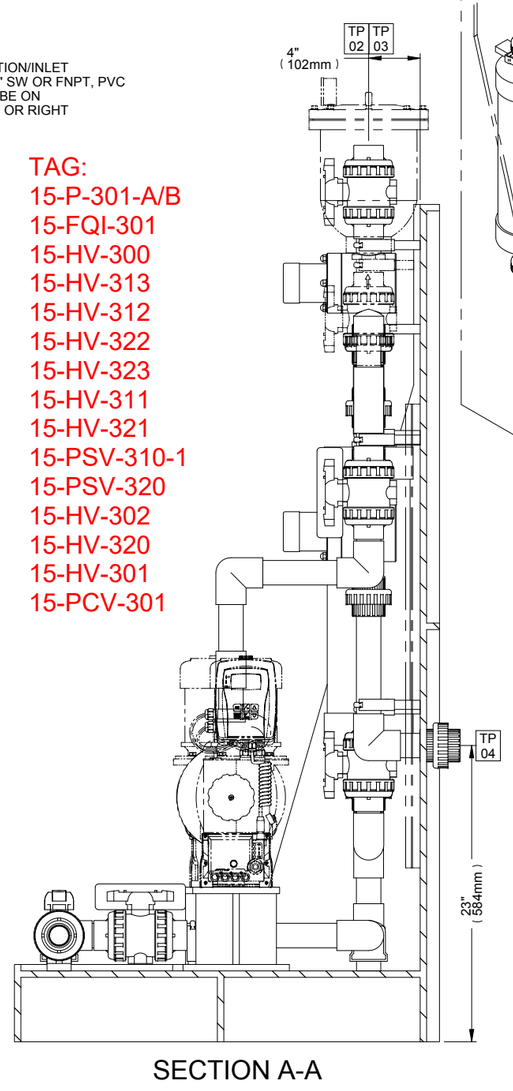

SECTION A-A

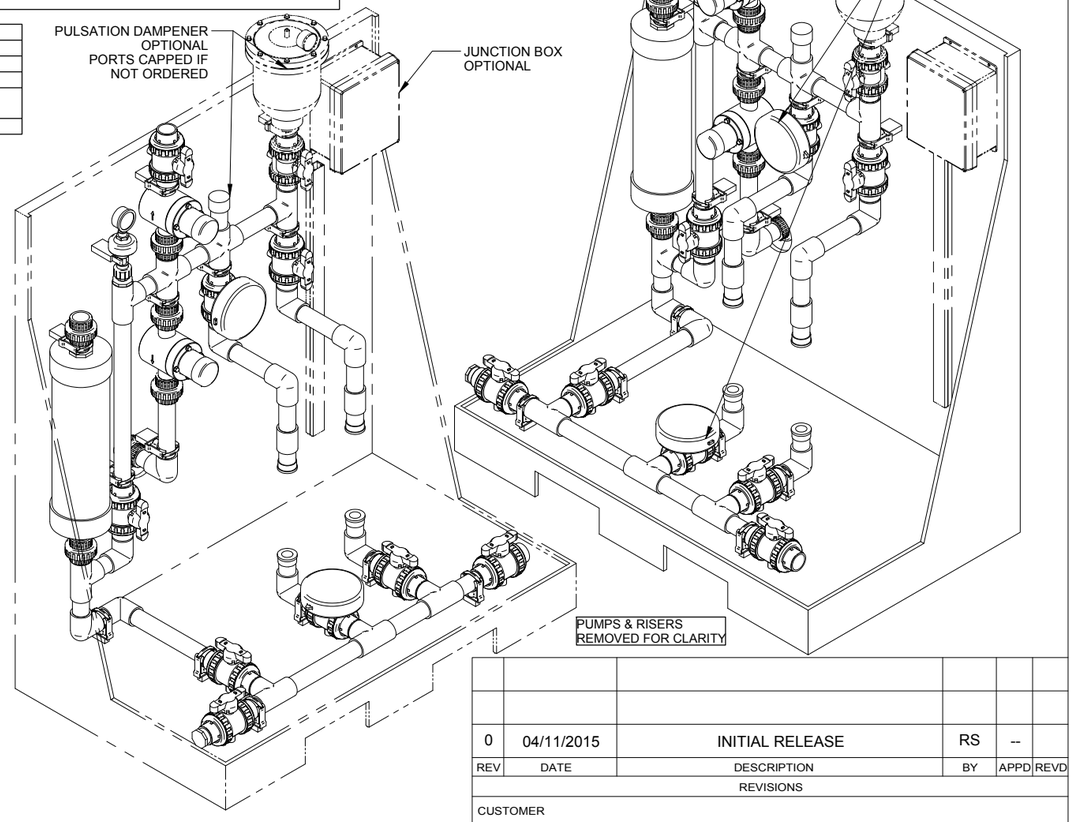

SHIP LOOSE MATERIALS

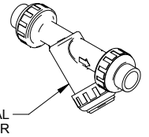

OPTIONAL
SEDIMENT Y-STRAINER
1-1/2" SOCKETWELD-PVC/EPDM
PN: 1062205, QTY: 1PC
INSTALLED ON SITE BY OTHERS

REV	DATE	DESCRIPTION	BY	APPD	REVD
0	04/11/2015	INITIAL RELEASE	RS	--	

REVISIONS

CUSTOMER: --

SUBJECT

JOB No: --

PURCHASE ORDER No: --

PURCHASER'S EQUIP. No: --

TITLE: PROSIP FMB-S TWO PUMP 1-1/2" PVC-EPDM DN32 - GENERAL ARRANGEMENT -

THIS DRAWING IS THE PROPERTY OF PROMINENT FLUID CONTROLS LTD. AND SHALL NOT BE COPIED OR TRANSFERRED WITHOUT THE WRITTEN CONSENT OF PROMINENT FLUID CONTROLS LTD.

ENGINEERS SEAL

ProMinent®
THE PROMINENT GROUP OF COMPANIES

GUELPH - ONTARIO - CANADA

PROMINENT FLUID CONTROLS LTD.
490 SOUTHGATE DRIVE.
GUELPH, ONTARIO, CANADA
N1H 6J3
TEL. 519 836 5692 FAX. 519 836 5226

PROMINENT FLUID CONTROLS LTD.
RIDC PARK WEST
136 INDUSTRY DRIVE,
PITTSBURGH P.A., USA. 15275
TEL. 412 787 2484 FAX. 412 787 0704

DESIGNED	RS	APPROVED	
DRAWN	RS	SCALE	NTS
CHECKED	--	DATE	16/09/2015

Scale based on: SHEET SIZE D

SHEET: 1/2

DWG No: 1061538-200

REV: 0

Item Number	Document Number	Title	Quantity
1	1061921	DEVICE: LOCKOUT FOR BALL VALVE HANDLE 5" - 6.5", RED	2
2	7904859	FITIING: CAP 1-1/2" SW, PVC, SCH 80	2
3	7904862	FITTING: COUPLING, 1-1/2" SW, PVC-SCH80	2
4	7904188	FITTING: CROSS, 1-1/2" SxSxSxS, PVC, SCH 80	2
5	7741440	FITTING: ELBOW-90, 1-1/2" SxS, PVC, SCH 80	10
6	7741447	FITTING: PIPE 1-1/2" PVC, SCH 80	20
7	7741400	FITTING: PIPE 1/2" PVC, SCH 80	1
8	1059919	FITTING: PLUG, 1-1/2" MNPT, PVC-SCH80	1
9	7904865	FITTING: PUMP ADAPTER, DN32 x 1-1/2" SPIG, PVC	4
10	7900963	FITTING: REDUCER BUSHING, 2" SPIG x 1-1/2" SW, PVC, SCH80	2
11	7740815	FITTING: REDUCER BUSHING, 2" SPIG x 1/2" SW, PVC, SCH80	1
12	7741442	FITTING: TEE 1-1/2" SxSxS, PVC, SCH 80	6
13	7904864	FITTING: UNION 1-1/2" SxS, PVC, EPDM, SCH 80	6
14	7260035	FITTING: UNION, 1/2" SxS, PVC, EPDM, SCH80	1
15	7903819	INSTRUMENT: 2 -1/2" PRESSURE GAUGE,0-160 PSIG, 316SS CASE, BRASS INTERNALS, BOTTOM MOUNT, GLYCERINE FILL WITH PVC ISOLATOR, 1/2" SW PROCEES CONNECTION, 1/4" FNPT GAUGE CONNECTION, GLYCERINE FILL, SG SERIES, CHEMLINE	1
16	7904854	INSTRUMENT: CALIBRATION COLUMN 10000ml, 2" SW, PVC	1
17	7741590 7901683	SUPPORT: 1-1/2" (50mm) PIPE CLIP WITH 2" STANDOFF	7
18	7741590 7900312	SUPPORT: 1-1/2" (50mm) PIPE CLIP WITH 3/4" STANDOFF	6
19	7260010 7900310 7901683	SUPPORT: 1/2" (20mm) PIPE CLIP WITH 1" & 2" STANDOFFS	1
20	1061561	SUPPORT: FRAME BLACK PE, 33" x 55" x 65"	1
21	1028759	SUPPORT: RISER, MS, 6.5", BLACK PP	2
22	1019889	VALVE: BACK PRESSURE/PRESSURE RELIEF VALVE, 1-1/2" SOCKETWELD CONNECTION, PVC WITH PRESSURE ADJUSTMENT SPRING 10-150PSI	2
23	7904867	VALVE: BALL VALVE, 1-1/2" PVC/EPDM, TYPE 21 (SOCKET & THREADED ENDS) CHEMLINE	9

SHIP LOOSE PARTS:
1-1/2" UNION FNPT x FNPT, PVC/EPDM - 1061942- 1PC
(FOR CAL. COLUMN & P.R.V. VENTS)
1-1/2" x 1-1/2" HOSE BARB ELBOW - 7904861 - 1PC
1-1/2" ID PVC BRAIDED TUBE - 7904105 - 10FT
GEAR CLAMP - 1059974 - 1PC
(FOR CAL. COLUMN VENT)
1-1/2"x1-1/2" MNPT, DN32 INJECTION VALVE, PVDF/PTFE - 1002783 - 1PC
1-1/2" SW/FNPT ENDS FOR BALL VALVES - 1PC Ea

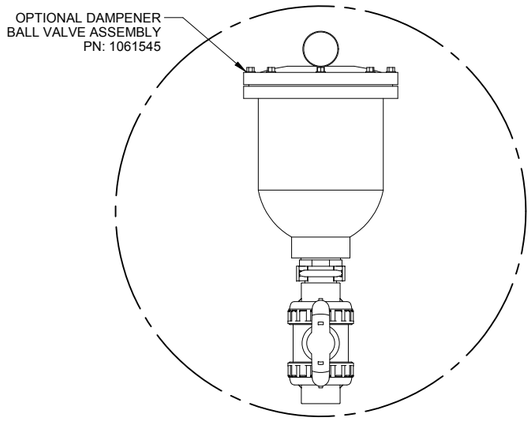

DETAIL B

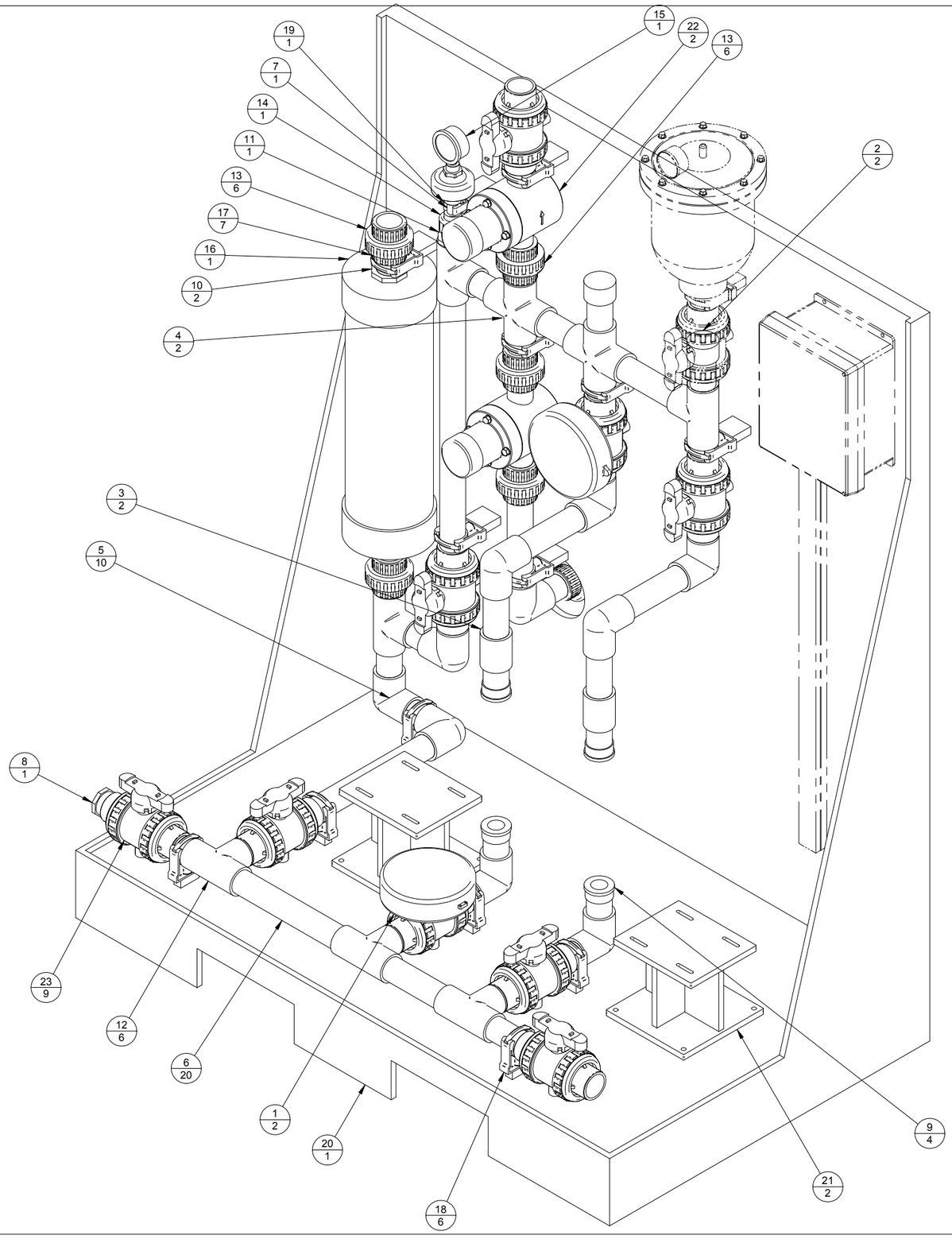

PN: 1061538

NOTES:

1. ALL PIPING MATERIAL IS SCHEDULE 80 PVC, SIZE 1/2" & 1-1/2". CONNECTIONS ARE SOCKETWELD UNLESS OTHERWISE REQUIRED BY PIPELINE DEVICES. PVC PRIMER IS IPS P70 PRIMER WITH 724 CEMENT.

2. ALL SEAL MATERIAL IS PTFE & EPDM UNLESS OTHERWISE SPECIFIED BY PIPELINE DEVICES.

3. PIPE SUPPORT IS MADE FROM 1/2" THICK POLYEHYLENE SHEET AND IS MADE FROM WELDED CONSTRUCTION.

4. ALL HARDWARE IS 18-8SS. ALL PIPE CLIPS/SUPPORTS ARE PLASTIC.

5. ALL INTERCONNECTING PIPE & FITTINGS, HARDWARE, GASKETS, SEALS AND WIRING ARE DONE ON SITE BY OTHERS.

6. AREA CLASSIFICATION: NON HAZARDOUS.

7. TOLERANCE ON ALL TERMINATION POINTS IS +/- 3/8" (10mm) UNLESS SPECIFIED BY CUSTOMER.

8. APPROX. SHIPPING WEIGHT: 91Kg (200 Lb)
APPROX. OPERATING WEIGHT: 100Kg (220 Lb)

9. SYSTEM IS FOR INDOOR INSTALLATION ONLY.

DESIGN NOTES:

CHEMICAL SERVICE: _____

- DESIGN TEMPERATURE: MAX: 86ºF (30ºC), MIN: 41ºF (5ºC)

UPSTREAM INJECTION PUMP-SUCTION:

- DESIGN PRESSURE: 14.5 PSIG (100kPa)
- MIN. TEST PRESSURE: 25 PSIG (172kPa)

DOWNSTREAM INJECTION PUMP-DISCHARGE:

- DESING PRESSURE: 150 PSIG (1034 kPa)
- MIN. TEST PRESSURE: 150 PSIG (1034 kPa)

TESTING CONDITION:

- TEST TYPE: HYDORSTATIC
- TEST MEDIUM: WATER
- TEST TEMPERATURE: AMBIENT 68ºF (20ºC)
- TEST DURATION: 10 MIN. (MINIMUM)

CORROSION ALLOWANCE: 0.0" (0.0mm).

REV	DATE	DESCRIPTION	BY	APPD	REVD
0	04/11/2015	INITIAL RELEASE	RS	--	

REVISIONS

CUSTOMER: --

SUBJECT

JOB No: --
PURCHASE ORDER No: --
PURCHASER'S EQUIP. No: --

TITLE PROSIP FMB-S TWO PUMP 1-1/2" PVC-EPDM DN32 - BILL OF MATERIALS-

THIS DRAWING IS THE PROPERTY OF PROMINENT FLUID CONTROLS LTD. AND SHALL NOT BE COPIED OR TRANSFERRED WITHOUT THE WRITTEN CONSENT OF PROMINENT FLUID CONTROLS LTD.

ENGINEERS SEAL

ProMinent®
THE PROMINENT GROUP OF COMPANIES

GUELPH - ONTARIO - CANADA

PROMINENT FLUID CONTROLS LTD.
490 SOUTHGATE DRIVE.
GUELPH, ONTARIO, CANADA
N1H 6J3
TEL. 519 836 5692 FAX. 519 836 5226

PROMINENT FLUID CONTROLS LTD.
RIDC PARK WEST
136 INDUSTRY DRIVE,
PITTSBURGH P.A., USA. 15275
TEL. 412 787 2484 FAX. 412 787 0704

DESIGNED	RS
DRAWN	RS
CHECKED	--
APPROVED	
SCALE	NTS
DATE	16/09/2015

Scale based on: SHEET SIZE D

SHEET: 2/2

DWG No: 1061538-200

REV: 0

Tag No. : 15-P-301-A/B

Motor-Driven Metering Pump Sigma X Control Type – Sigma/ 3 - S3Cb

The new Sigma X range – reliable, smart and connectible

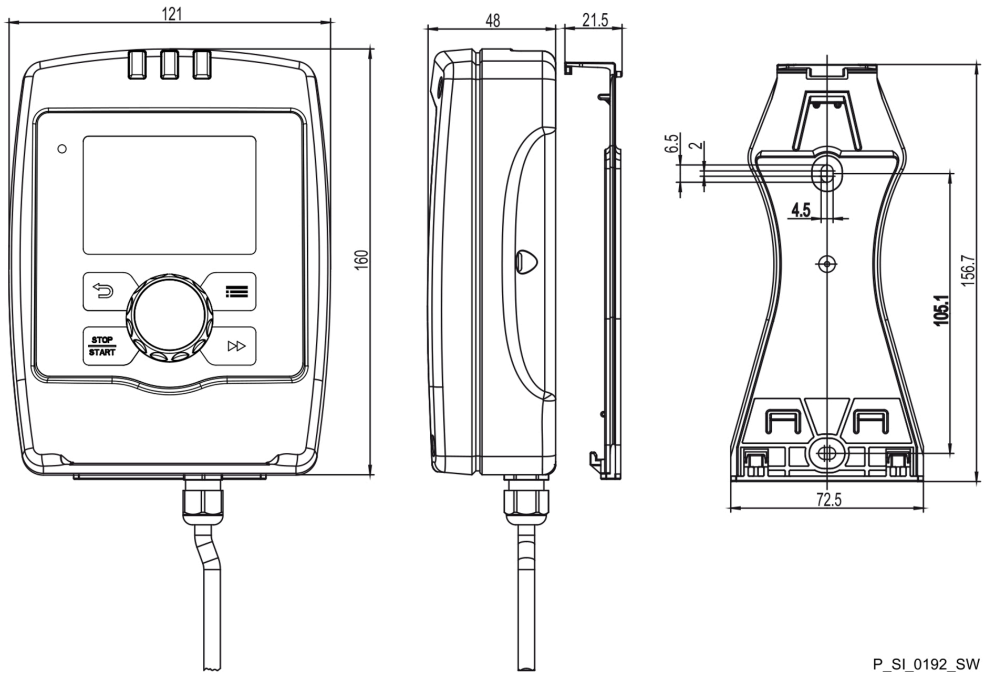

Exemplary representation. The dimensions depend on the configuration chosen.

The Sigma control type is a smart motor-driven metering pump that is setting new standards in terms of productivity, reliability and safety.

Technical Details

- Stroke length: 6 mm
- Stroke length adjustment range: 0 – 100%
- Stroke length adjustment: manually using self-locking rotary dial in 1 % increments
- With the right, constant conditions, correct installation and calibration, precision exceeds ±1 %, based on maximum stroke volume.
- Power supply: 1-phase, 100 – 230 V ±10%, 240 V ±6%, 50/60 Hz (420 W)
- IP 65 degree of protection
- Fibreglass-reinforced plastic housing
- Manual or external contact mode can be set, factor with external contact control 99:1 – 1:99; batch mode with max. 99,999 strokes/start pulse.
- Metering profiles for optimum metering results.
- Display of wear parts in the Service menu.
- Connector for 2-stage level switch.
- Connection to PROFINET using the ProMinent DULCOnvert PROFIBUS®-PROFINET converter
- Various relay modules can be selected.
- The Sigma product range is available in a 'Physiologically safe in respect of wetted materials' design.
- Wetted materials: PVDF, stainless steel 1.4571/1.4404, special materials on request.
- Dosing heads with electro-polished stainless steel for aqueous media are available on request for applications with strict hygiene requirements.
- We are happy to supply alternative material versions to comply with export conditions for pump capacities of >600 l/h and PVDF.
- Customised designs are available on request.

For reasons of safety, provide suitable overflow devices during installation for all mechanically deflected diaphragm metering pumps.



ProMinent Webshop

Technical changes reserved. Printed in Germany, 20-2-2023.

Motor-Driven Metering Pump Sigma X Control Type – Sigma/ 3 - S3Cb

The new Sigma X range – reliable, smart and connectible

Technical Data

Type	Capacity at max. back pressure			Max. stroke rate	Pump capacity at max. back pressure		Suction lift	Perm. pre-pressure suction side	Connector Suction/ Discharge Side	Shipping weight
S3Cb	l/h	bar	ml/stroke	Strokes/min	gph (US)	psi	m WC	bar	G-DN	kg
120145 PVT	182	10	33.7	90	48.0	145	5	2	1 1/2–25	22
120145 SST	182	12	33.7	90	48.0	174	5	2	1 1/2–25	26
120190 PVT	243	10	33.7	120	64.1	145	5	2	1 1/2–25	22
120190 SST	243	12	33.7	120	64.1	174	5	2	1 1/2–25	26
120270 PVT	365	10	33.8	180	96.4	145	5	2	1 1/2–25	22
120270 SST	365	12	33.8	180	96.4	174	5	2	1 1/2–25	26
070410 PVT	500	7	95.1	90	132.0	102	4	1	2–32 *	24
070410 SST	500	7	95.1	90	132.0	102	4	1	2–32 *	29
070580 PVT	670	7	95.1	120	176.9	102	4	1	2–32 *	24
070580 SST	670	7	95.1	120	176.9	102	4	1	2–32 *	29
040830 PVT	1,040	4	95.1	180	274.7	58	3	1	2–32 *	24
040830 SST	1,040	4	95.1	180	274.7	58	3	1	2–32 *	29

* DN32 plate valves with valve spring

Materials in Contact with the Medium

		DN 25 ball valves			DN 32 plate valves			
Identity code of material	Seals	Suction / discharge connection on dosing head DN 25	Valve balls	Valve seats	Suction / discharge connection on dosing head DN 32	Valve plates/ valve springs	Valve seats	Integral relief valve
PVT	PTFE	PVDF	Glass	PTFE *	PVDF	Ceramic/ Hastelloy C + CTFE **	PTFE	PVDF/FKM or EPDM
SST	PTFE	Stainless steel 1.4581	Stainless steel 1.4404	PTFE *	Stainless steel 1.4581	Stainless steel 1.4404/Hastelloy C	PTFE	Stainless steel/FKM or EPDM
TTT ***	PTFE	PTFE + 25% carbon	Stainless steel 1.4404	PTFE *	PVDF	Ceramic/ Hastelloy C + CTFE **	PTFE	-
PVF	PTFE	PVDF	Glass	PVDF	-	-	-	-
SSF	PTFE	Stainless steel 1.4581/1.4404	Stainless steel 1.4404	PVDF	-	-	-	-
SSG	PTFE	Stainless steel 1.4581/1.4404	Stainless steel 1.4404	Stainless steel 1.4404	-	-	-	-
SSH ****	EPDM or FKM	Stainless steel 1.4435	Stainless steel 1.4404	Stainless steel 1.4404	Stainless steel 1.4581	Ceramic/E-CTFE	Stainless steel 1.4404	-

* With design 'F', the ball seat is made of PVDF, only for DN 25 ball valves

** The valve spring is coated with CTFE (resistance similar to PTFE)

*** Specifically for areas at risk from explosion

**** DN 25 and DN 32 designed as ball non-return valve

Motor Data

Identity code specification		Power supply			Remarks
U	1-phase, IP 65	100 – 230 V ±10 % / 240 V ±6 %	50/60 Hz	420 W	Wide-range voltage power unit

Motors less than 0.75 kW and motors designed for speed-controllable operation are not subject to the IE3 standard in compliance with the Ecodesign Directive 2009/125/EC.

Technical changes reserved. Printed in Germany, 20-2-2023.

ProMinent Group
info@prominent.com

PN: 1122683

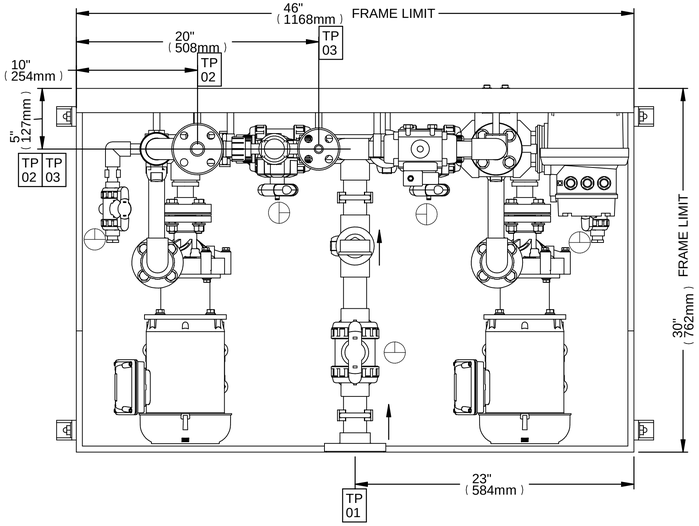

TERMINATION POINT SCHEDULE		
NOZZLE(TP)	SERVICE	CONNECTION
01	SUCTION / INLET	1-1/2" FF FLANGE, 150#, PVC
02	DISCHARGE / OUTLET	1" FF FLANGE, 150#, PVC
03	PSV RELIEF OUTLET	1/2" FF FLANGE, 150#, PVC

MAG DRIVE CENTRIFUGAL PUMP
MODEL: DB9V-R-FF-M219
MAXIMUM FLOW: 46 USGPM @ HEAD 11FT
MINMUM FLOW: 0.5 USPGM @ HEAD 67FT
CONSTRUCTION MATERIALS: PVDF/FKM O-RING
MOTOR: 3435 RPM,1 HP (0.75 kW), 230/460V,60 Hz, 3 Ph
TYP: x2 (DUTY / STANDBY)

NOTE:SYSTEM OPERATING CONDITIONS ARE DIFFERENT FROM PUMP PERFORMANCE CURVE. PLEASE REFER TO DRAWING NOTES ON SECOND PAGE FOR SYSTEM OPERATING & DESIGN CONDITIONS

VENTED BALL VALVES REQUIRED

⊕-THIS SYMBOL INDICATES SIDE OF THE VALVE THAT THE BALL IS TO BE VENTED TO. DRILL Ø1/8" HOLE.

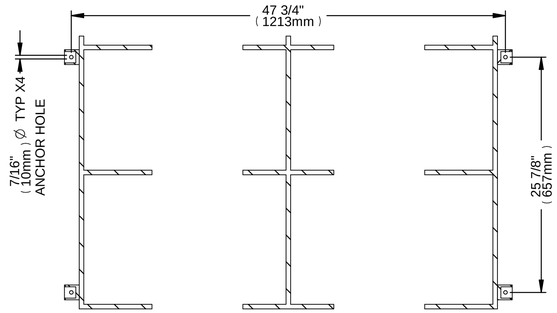

SECTION B-B
FOOTPRINT
USE QTY:4, 3/8" BOLTS
(ANCHOR BOLTS NOT IN PROMINENT SCOPE)

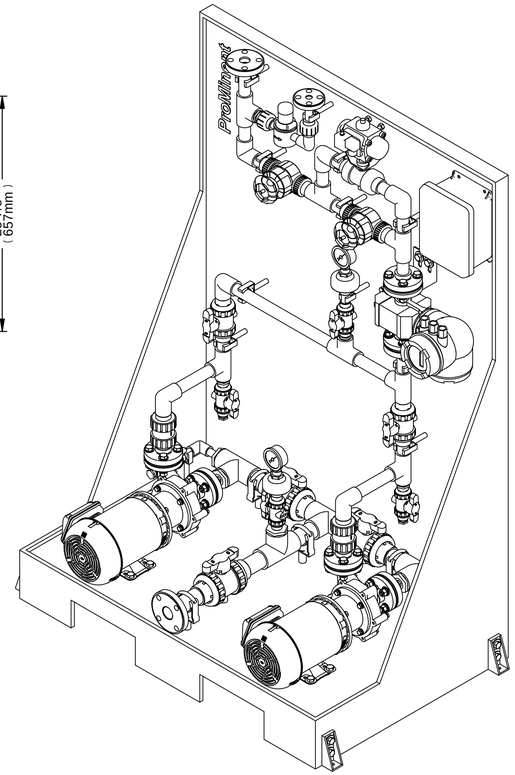

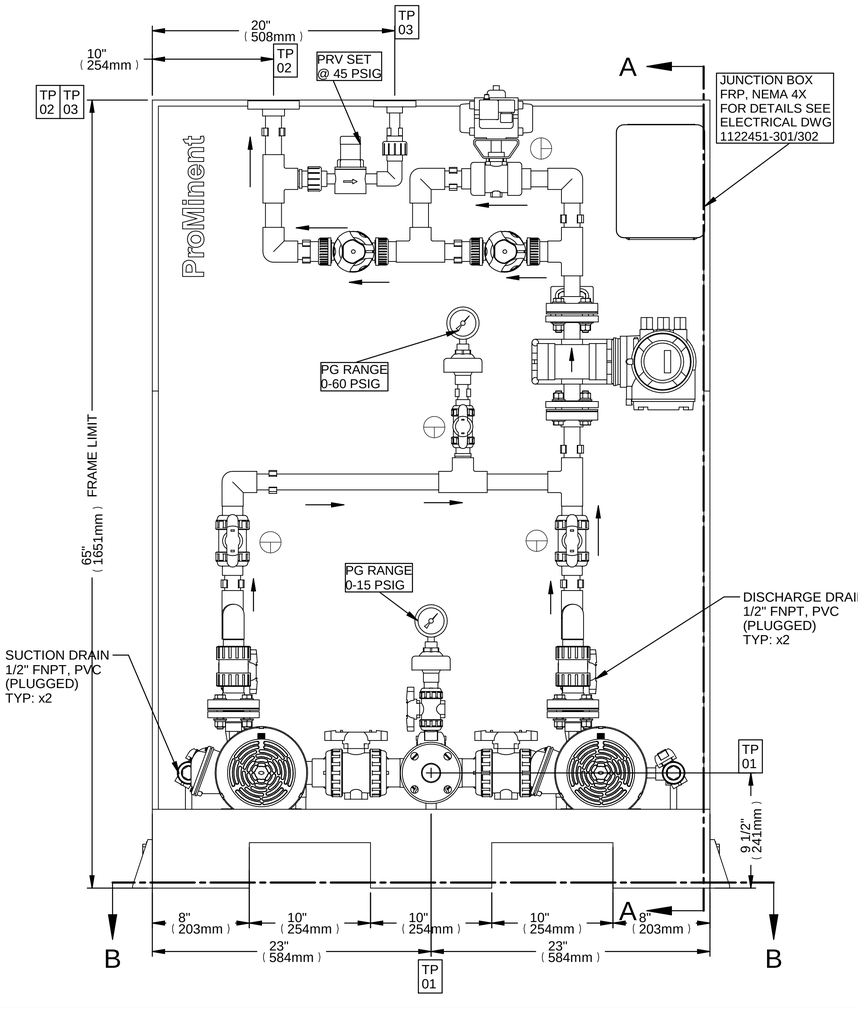

TAGS:
23-P-301-A/B
23-HCV-305
23-HCV-306
23-PSV-301
23-STR-303
23-HV-301
23-HV-302
23-HV-303-A/B
23-HV-304-A/B
23-HV-307-A/B
23-HV-306-A/B
23-CV-305-A/B
23-HV-308
23-PI-301
23-PI-302
23-FIT-301
23-FV-305

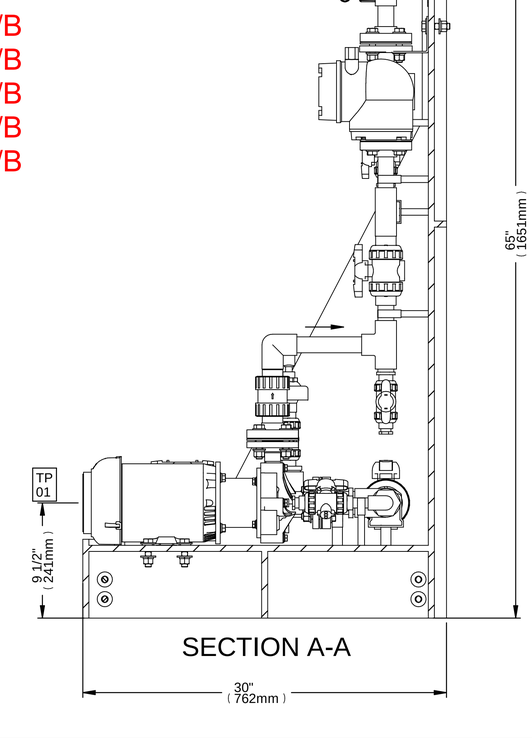

SECTION A-A

REV	DATE (YYYY-MM-DD)	DESCRIPTION	BY	APPD	REVD
1	2023-07-25	UPDATED MAGNETIC FLOW METER	GB	AG	
0	2022-03-14	INITIAL RELEASE	GB	RJ	

REVISIONS

CUSTOMER
VEOLIA WATER TECHNOLOGIES & SOLUTIONS

SUBJECT

PFC PROSIP No
1122683

PURCHASE ORDER No
--

PURCHASER'S EQUIP. No

TITLE
VEOLIA MAGDRIVE-F PVC-VITON, 2P 460V
- GENERAL ARRANGEMENT DRAWING -

THIS DRAWING IS THE PROPERTY OF PROMINENT FLUID CONTROLS LTD. AND SHALL NOT BE COPIED OR TRANSFERRED WITHOUT THE WRITTEN CONSENT OF PROMINENT FLUID CONTROLS LTD.

ENGINEERS SEAL

ProMinent®
THE PROMINENT GROUP OF COMPANIES

GUELPH - ONTARIO - CANADA

PROMINENT FLUID CONTROLS LTD.
490 SOUTHGATE DRIVE.
GUELPH, ONTARIO, CANADA
N1G 4P5
TEL. 519 836 5692 FAX. 519 836 5226

PROMINENT FLUID CONTROLS INC.
136 INDUSTRY DRIVE,
PITTSBURGH P.A., USA.
15275
TEL. 412 787 2484 FAX. 412 787 0704

DESIGNED	GB	APPROVED	
DRAWN	GB	SCALE	NTS
CHECKED	RJ	DATE (YYYY-MM-DD)	2022-03-14

SHEET No: 1/2

CUSTOMER DWG No

PFC DWG No
1122683-200- 1

REV
1

PN: 1122683

COMPONENT LIST *PART IS HIDDEN FROM VIEW

ITEM	PART #	DESCRIPTION	QTY
1	7740695	FITTING: 1" SW FLANGE, 1PC, 150#, SCH80, PVC, ASTM D 1784	7
2	7900948	FITTING: 1-1/2" SW FLANGE, 1PC, 150#, SCH80, PVC, ASTM D 1784	1
3	7741396	FITTING: 1/2" SW FLANGE, 1PC, 150#, SCH80, PVC, ASTM D 1784	1
4	7741327	FITTING: ELBOW, 1" SWxSW, PVC, SCH 80	6
5	7260006	FITTING: ELBOW, 1/2" SWxSW, PVC, SCH 80	3
6	7000325	FITTING: PLUG 1/2" MNPT PVC SCH 80	4
7	7741358	FITTING: REDUCER BUSHING, 1" SPIG x 1/2" SW, PVC SCH80	4
8	7900952	FITTING: REDUCER BUSHING, 1-1/2" SPIG x 1" SW, PVC SCH80	2
9	7900950	FITTING: REDUCER BUSHING, 1-1/2" SPIG x 1/2" SW, PVC SCH80	3
10	7741333	FITTING: TEE, 1" SWxSWxSW, PVC, SCH80	7
11	7741442	FITTING: TEE, 1-1/2" SWxSWxSW, PVC, SCH 80	4
12	7740551	FITTING: UNION, 1/2" SWxSW, PVC, VITON, SCH80	2
13	1122575	FRAME: MAG DRIVE 2 PUMP, 65" x 46" x 30", BLACK PE	1
14	7901609	GASKET: 1", FULL FACE, 150#, 1/8" THICK, FPM (VITON)	6
15	7902194	HARDWARE: FLAT WASHER, 1/2", 1.060" OD, 316 SS	48
16	7900011	HARDWARE: FLAT WASHER, 1/2", 316 SS	36
17	7902724	HARDWARE: HEX CAP SCREW, 1/2"-13, 2" LG, 18-8 SS, 1-1/4" THREAD LG	18
18	7900847	HARDWARE: HEX CAP SCREW, 1/2"-13, 2.5"LG, 18-8 SS, 1" THREAD LG	24
19	7900015	HARDWARE: HEX NUT, 1/2"-13, 18-8 SS	42
20	7900012	HARDWARE: LOCK WASHER, 1/2", 18-8 SS	42
21	1121677	INSTRUMENT: 2 -1/2" PRESSURE GAUGE, 0-15 PSIG, 304SS CASE, 316SS INTERNALS, REMOVEABLE BEZZEL 1/4" MNPT BOTTOM MOUNT, SILICONE OIL FILL WITH PVC ISOLATOR, 1/2" SOCKETWELD PROCESS CONNECTION, 1/4" FNPT GAUGE CONNECTION, GLYCERINE FILL, WIKA	1
22	1121678	INSTRUMENT: 2 -1/2" PRESSURE GAUGE, 0-60 PSIG, 304SS CASE, 316SS INTERNALS, 1/4" MNPT BOTTOM MOUNT, SILICONE OIL FILL WITH PVC ISOLATOR, 1/2" SOCKETWELD PROCESS CONNECTION, 1/4" FNPT GAUGE CONNECTION, GLYCERINE FILL, WIKA	1
23	1130776 + 1122667 + 1122667	INSTRUMENT: MAGNETIC FLOW METER, PROMAG P 300, 5P3B25, DN25, INTEGRAL UNIT, 1" FLANGE 150# CONNECTIONS-SS(NON WETTED, PTFE LINER ANSI B16.5, CONNECTIONS, INTEGRAL MOUNTED NEMA-4X ENCLOSURE WITH LCD DISPLAY, 4-20mA OUTPUT, HART PROTOCOL, WITH TWO ALLOY C22 GROUND DISKS. 24VDC - ENDRESS-HAUSER PN: 5P3B25-CSIBAEAFADEA1SHAA1+AAZ1 + DK5GD-25BEL	1
24	7900315	LABEL: PROMINENT LOGO, WHITE & ORANGE x 1-7/8"H, VINYL	1
25	1122452	MAG DRIVE CENTRIFUGAL PUMP, 1" 150# RFSO, PVDF IMPELLER, VITON, 230/460V, 3 Ph, 60 Hz, FINISH THOMPSON INC.	2
26	7741324	PIPE: 1", PVC, SCH80	8FT
27	7741447	PIPE: 1-1/2", PVC, SCH80	4FT
28	7741400	PIPE: 1/2", PVC, SCH80	2FT
29	7741318	SUPPORT: 1" (32mm) PIPE CLIP WITH 1/4" x 2-1/4" PVC PIPE STANDOFF	9
30	1122577	SUPPORT: 1"FLANGE SUPPORT BRACKET, TYPE 1, 304 SS	1
31	7741590	SUPPORT: 1-1/2" (50mm) PIPE CLIP WITH 1/2" x 1-1/2" PVC PIPE STANDOFF	4
32	7260010	SUPPORT: 1/2" (20mm) PIPE CLIP WITH 1/4" x 2-1/2" PVC PIPE STANDOFF	4
33	7900388	SUPPORT: FRP INSIDE CORNER GUSSET 1-5/8" x4", 3 HOLE	4
34	1122518	VALVE: 1" ACTUATOR PNEUMATIC, PA SERIES, PAS00, ON 1" PVC/VITON, TYPE 21 UNION BALL VALVE, VENTED BALL WITH PAD MOUNTED SOLENOID VALVE. 24 VDC - CHEMLINE	1
35	1116851	VALVE: 1" DIAPHRAGM VALVE, PVC/VITON, TYPE 514 PVC-U, SOCKET WELD ASTM, TRUE UNION. - GEORG FISCHER	2
36	1019883	VALVE: BACK PRESSURE VALVE, 1/2" SW CONNECTION, BODY MATERIAL PVC, PRESSURE RANGE 0-150PSI, PROMINENT	1
37	7901155	VALVE: BALL CHECK VALVE, 1" SW, TRUE UNION, BODY MATERIAL PVC, SEALS VITON, CHEMLINE	2
38	7745145	VALVE: BALL VALVE, 1" SW, BODY MATERIAL PVC, SEALS VITON (FKM), VENTED BALL, (COMES WITH SOCKET & FNPT ENDS), TYPE 21, CHEMLINE	2
39	7745146	VALVE: BALL VALVE, 1-1/2" SW, BODY MATERIAL PVC, SEALS VITON (FKM), VENTED BALL, (COMES WITH SOCKET & FNPT ENDS), TYPE 21, CHEMLINE	3
40	7745143	VALVE: BALL VALVE, 1/2" SW, BODY MATERIAL PVC, SEALS VITON (FKM), VENTED BALL, (COMES WITH SOCKET & FNPT ENDS), TYPE 21, CHEMLINE	6

SHIPPED LOOSE ITEMS			
ITEM	PART #	DESCRIPTION	QTY
SL	1049960	DEVICE: 1-1/2" TRUE UNION Y SEDIMENT STRAINER, PVC/VITON SW	1

MAG DRIVE CENTRIFUGAL PUMP
MODEL: DB9V-R-FF-M219
MAXIMUM FLOW: 46 USGPM @ HEAD 11FT
MINMUM FLOW: 0.5 USPGM @ HEAD 67FT
CONSTRUCTION MATERIALS: PVDF/FKM O-RING
MOTOR: 3435 RPM,1 HP (0.75 kW), 230/460V,60 Hz, 3 Ph
TYP: x2 (DUTY / STANDBY)

1/2 TOP SIDE = CHART NUMBER
BOTTOM SIDE = QUANTITY NUMBER

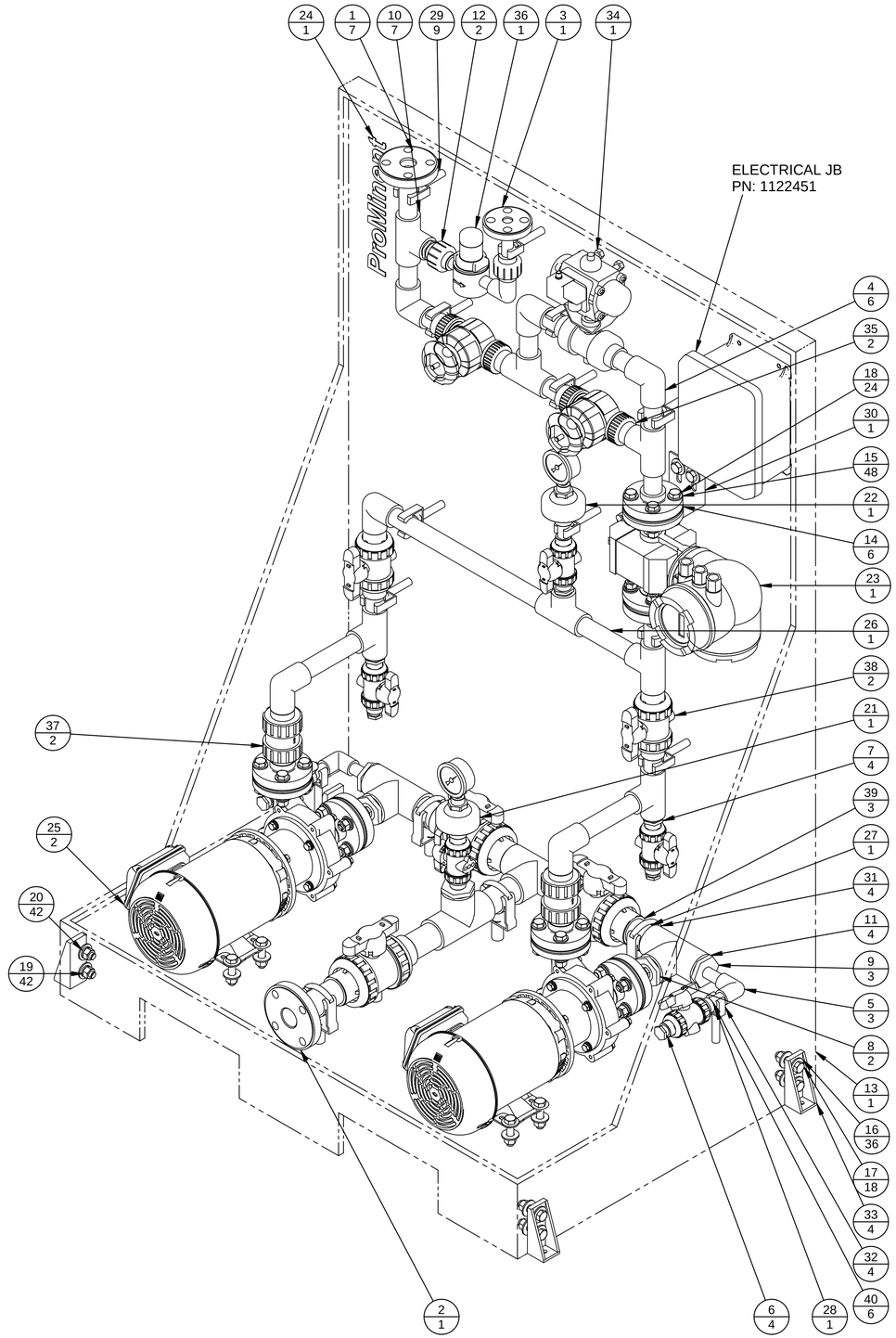

NOTES:

1. SYSTEM IS DESIGNED, FABRICATED, TESTED AND INSPECTED AS PER PROMINENT STANDARD

2. PIPING MATERIAL IS PVC SCH 80 IN CONFORMANCE WITH ASTM D 1785 (FOR PHYSICAL DIMENSIONS, TEST REQUIREMENTS AND MAXIMUM OPERATING PRESSURE) IN SIZES1-1/2",1" & 1/2" PIPE.
ALL CONNECTIONS ARE 1-1/2", 1" & 1/2" SCH 80 PVC SOCKET WELD UNLESS OTHERWISE REQUIRED BY PIPELINE DEVICES.UNIONS ARE TRUE UNION STYLE, SCH80 PVC WITH VITON O-RING SEAL RATED FOR 150 PSIG. FLANGES ARE PVC, FULL FACE, CLASS 150, ASME/ANSI B16.5.

3.GASKETS ARE FULL FACE TYPE, CLASS 150, VITON, 1/8" THK FOR FLANGE CONNECTION, ASME B16.20.

4. BOLTING ARE 18-8 SS HEX CAP SCREW WITH FLAT WASHER, LOCK WASHER AND 18-8 SS HEX NUT.

5. PUMP AND PIPING SUPPORT FRAME IS CONSTRUCTED OF BLACK POLYETHYLENE. MATERIAL THICKNESS: 1/2" [13MM].AND IS FABRICATED BY WELD CONSTRUCTION.

6. ALL INTERCONNECTING PIPE & FITTINGS AND WIRING BY OTHERS.

7. ALL SEAL MATERIAL IS PTFE/VITON OTHERWISE SPECIFIED BY CUSTOMER.

8. TOLERANCE ON ALL TERMINATION POINTS: +/-10mm (+/-3/8").

APPROX.SHIPPING WEIGHT: 285 LB (129 Kg).
APPROX.OPERATING WEIGHT: 310LB (140 Kg).

DESIGN NOTES:
SYSTEM OPERATING CONDITIONS ARE DIFFERENT FROM PUMP PERFORMANCE CURVE
MAXIMUM SYSTEM OPERATING FLOW: 30 USGPM @ 14 PSIG
MINIMUM SYSTEM OPERATING FLOW: 0.5 USGPM @ 29 PSIG

UPSTREAM INJECTION PUMP-SUCTION:

- DESIGN TEMPERATURE: MIN. 15ºC TO MAX. 25ºC
- DESIGN PRESSURE: 14.7 PSIG
- MIN. TEST PRESSURE: 25 PSIG

DOWNSTREAM INJECTION PUMP-DISCHARGE:

- DESIGN TEMPERATURE: MIN. 15ºC TO MAX. 25ºC
- DESIGN PRESSURE: 45 PSIG
- MIN. TEST PRESSURE: 55 PSIG

TESTING CONDITION:

- TEST TYPE: HYDROSTATIC
- TEST MEDIUM: WATER
- TEST TEMPERATURE: AMBIENT 68ºF (20ºC)
- TEST DURATION: 10 MIN. (MINIMUM)

CORROSION ALLOWANCE: 0.0" (0.0mm).

REV	DATE (YYYY-MM-DD)	DESCRIPTION	BY	APPD	REVD
1	2023-07-25	UPDATED MAGNETIC FLOW METER	GB	AG	
0	2022-03-14	INITIAL RELEASE	GB	RJ	

REVISIONS

CUSTOMER
VEOLIA WATER TECHNOLOGIES & SOLUTIONS

SUBJECT

PFC PROSIP No
1122683

PURCHASE ORDER No
--

PURCHASER'S EQUIP. No

TITLE
VEOLIA MAGDRIVE-F PVC-VITON, 2P 460V
- BILL OF MATERIALS -

THIS DRAWING IS THE PROPERTY OF PROMINENT FLUID CONTROLS LTD. AND SHALL NOT BE COPIED OR TRANSFERRED WITHOUT THE WRITTEN CONSENT OF PROMINENT FLUID CONTROLS LTD.

ENGINEERS SEAL

ProMinent®
THE PROMINENT GROUP OF COMPANIES
GUELPH - ONTARIO - CANADA
PROMINENT FLUID CONTROLS LTD.
490 SOUTHGATE DRIVE.
GUELPH, ONTARIO, CANADA
N1G 4P5
TEL. 519 836 5692 FAX. 519 836 5226
PROMINENT FLUID CONTROLS INC.
136 INDUSTRY DRIVE,
PITTSBURGH P.A., USA.
15275
TEL. 412 787 2484 FAX. 412 787 0704

DESIGNED	GB	APPROVED	
DRAWN	GB	SCALE	NTS
CHECKED	RJ	DATE (YYYY-MM-DD)	2022-03-14

SHEET No: 2/2

CUSTOMER DWG No

PFC DWG No
1122683-200- 2

REV
1

PumpCatalog.com

DB SERIES
MODEL DB9

For Sodium Hypo

TAGS:
23-P-101-A/B

ns? Call 1-800-810-1053



5 YEAR WARRANTY

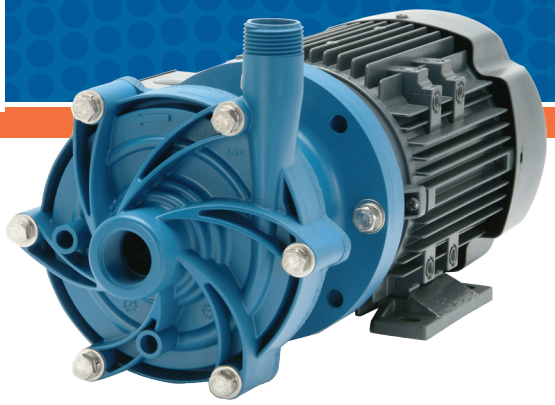

DB9 PERFORMANCE 3450 RPM

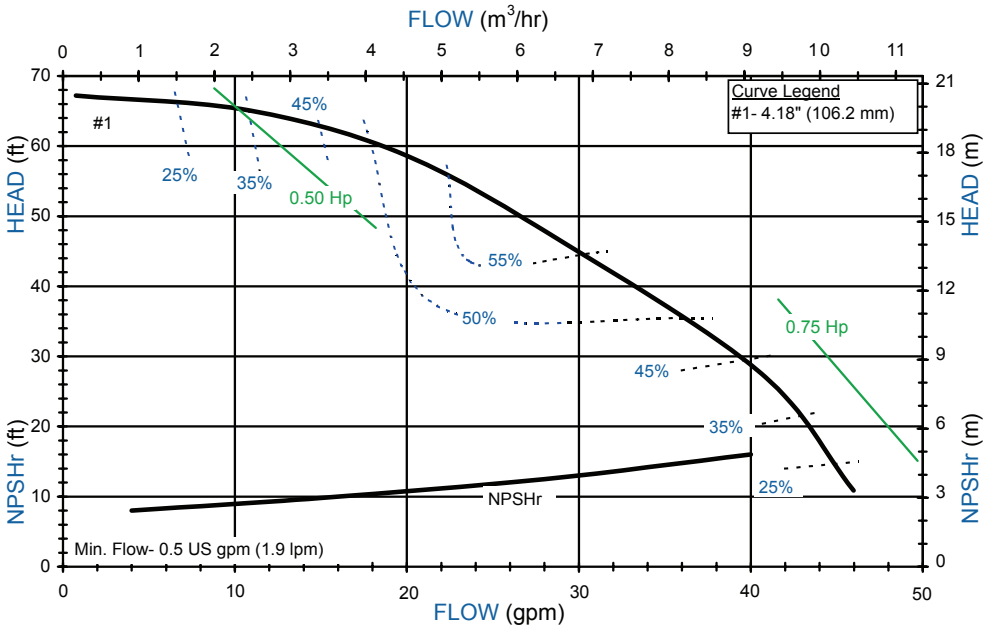

DB9 PERFORMANCE 1725 RPM

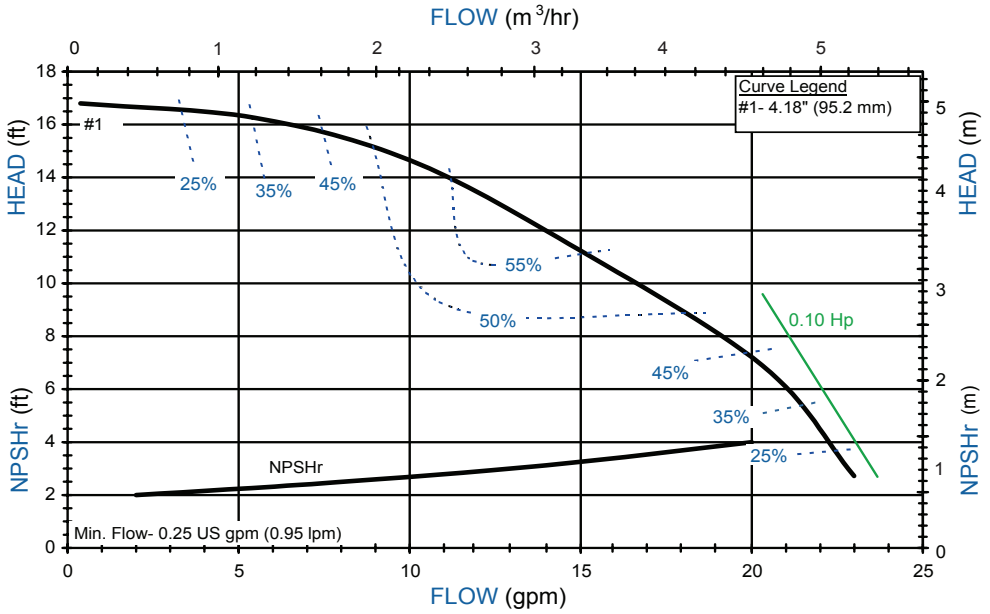

FEATURES & CAPABILITIES

+ *Five-year warranty*
+ *Extended run dry ability (with carbon bushing)*
+ *High operating efficiency*
+ *Polypropylene or PVDF construction*
+ *Powerful neodymium magnets*
+ *Close-coupled design*
+ *Threaded (NPT or BSP), flanged, or union connections*
+ *Horizontal or vertical installation with IEC motor*
+ *Back pullout design*
+ *Mounts to NEMA and IEC (B5 & B14) motor frames*
+ *Easy set measurement free drive*
+ *ISO 1940 G2.5 balancing*
+ *CE certified/ATEX available*
+ *Working pressure to 80 psi (5.5 bar)*
+ *Specific gravity over 1.8*
+ *Viscosity up to 150 cP*
+ *Polypropylene—180° F (82° C)*
+ *PVDF—220° F (104° C)*

APPLICATIONS

+ *Chemical processing*
+ *Plating*
+ *Water and wastewater*
+ *Electronics*
+ *Pharmaceuticals*
+ *Wet scrubber*
+ *Pulp and paper*
+ *Heat exchanger*
+ *and many more!*

For Sodium Hypo
Tag: 23-P-101-A/B

MPSON PUMPING SOLUTIONS AROUND THE WORLD finishthompson.com
rder Online: www.PumpCatalog.com

Specifications

Description		Polypropylene	PVDF
1	Impeller housing	Glass-fiber reinforced polypropylene (GF PP)	Carbon-fiber reinforced PVDF (CF PVDF)
1A	Impeller housing thrust ring	High purity alumina ceramic or silicon carbide (SiC)	
2	O-ring	FKM, EPDM, Simriz®, or Kalrez	
3	Impeller	GF PP	CF PVDF
3A	Impeller thrust ring	GF molybdenum disulfide filled PTFE, or SiC	
4	Inner drive	Neodymium iron boron magnets encapsulated in unfilled polypropylene	Neodymium iron boron magnets encapsulated in unfilled PVDF
5	Bushing	Carbon, PTFE, high purity alumina ceramic, or SiC	
6	Shaft	High purity alumina ceramic, Hastelloy® C, or SiC	
7	Barrier	GF PP	CF PVDF
7A	Barrier thrust ring	Silicon carbide	
8	Clamp ring	Ductile iron	
9	Motor adapter	GF PP	
10	Outer drive magnet	Nickel-plated neodymium iron boron magnets/ steel	
11A 11B 11C	Motor adapter sealing kit (NEMA only)	Buna N	

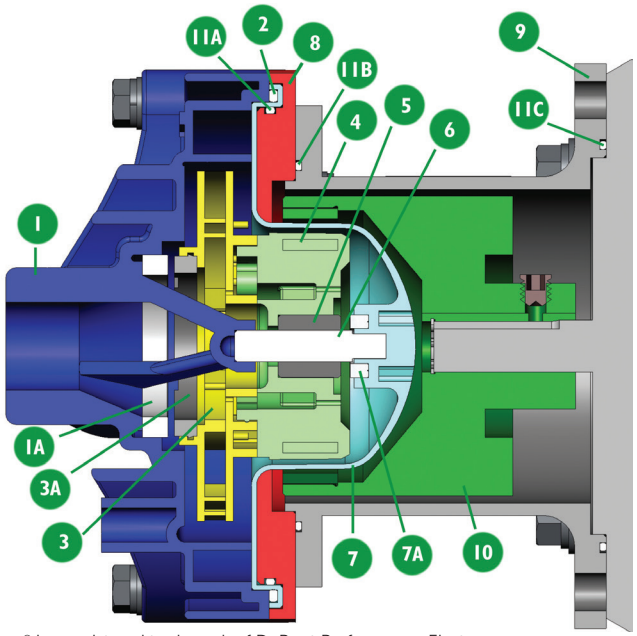

Kalrez® is a registered trademark of DuPont Performance Elastomers
Simriz® Perfluoroelastomer is a registered trademark of the Simrit® division of Freudenberg-NOK
Hastelloy® C is a registered trademark of Haynes International, Inc.

Dimensions

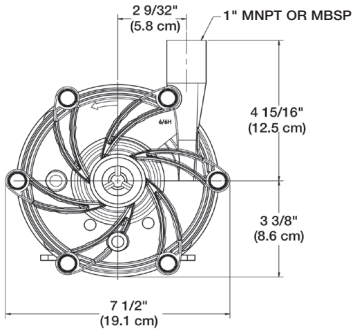

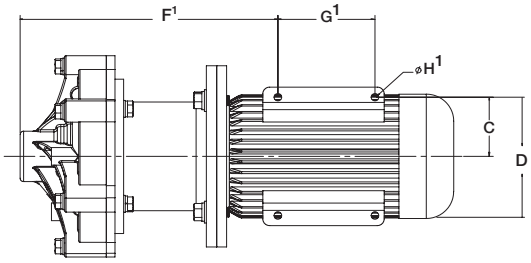

[1]Dimensions for F, G, and H can be found in the Outline Dimensions booklet in the Downloads section of www.finishthompson.com.

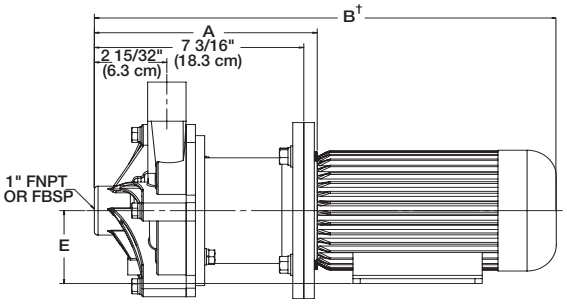

Also available 1" x 1" 150 lb. ANSI/ISO PN20/PN40/JIS 10K or 32mm x 32mm union connection. Flanges are in compliance with bolting dimensions only.

Motor Frame	A	B†	C	D	E	lbs. [kg] PP	lbs. [kg] PVDF
NEMA 56C	7-3/16" [18.3 cm]	17-7/16" [44.3 cm]	2-7/16" [6.2 cm]	4-7/8" [12.4 cm]	3-1/2" [8.9 cm]	10.5 [4.8]	11.1 [5.0]
NEMA 145TC	7-3/16" [18.3 cm]	17 15/16" [45.6 cm]	2-3/4" [7.0 cm]	5-1/2" [14.0 cm]	3-1/2" [8.9cm]	10.5 [4.8]	11.1 [5.0]
IEC 63 w/B14 or B5	7-5/8" [19.4 cm]	14-7/8" [37.8 cm]	1-31/32" [5.0 cm]	3-15/16" [10.0 cm]	2-15/32" [6.3 cm]	14.0 [6.4]	15.0 [6.8]
IEC 71 w/B14 or B5	7-5/8" [19.4 cm]	15-13/16" [40.2 cm]	2-7/32" [5.6 cm]	4-13/32" [11.2 cm]	2-25/32" [7.1 cm]	14.0 [6.4]	15.0 [6.8]

Dimensions and weights are for reference only. Weights listed are for pump only; motor not included.
†Varies with motor manufacturer.

finishthompson.com

FINISH THOMPSON INC. - HEADQUARTERS
921 Greengarden Road | Erie, PA 16501
800.934.9384 | ph 814.455.4478 | fx 814.455.8518
email fti@finishthompson.com

FINISH THOMPSON INC. - EUROPE CENTER
Otto-Hahn-Strasse 16 | Maintal, D-63477 Germany
49 (0)6181-90878-0 | fx 49 (0)6181-90878-18
email fti@finishthompson.com

SULZER

Submersible Mixer Type ABS RW

RW 650 | 25.6" Propeller, Direct Drive, 12 Pole, 3-Phase, 60 Hz

Anoxic Tank Mixers:
Tag : 16-MX-211-1/2/3

Submersible Motor Specifications

Motor Design		NEMA design B, squirrel cage induction
Motor Type		Fully enclosed submersible, IP68 protection rating
Motor Efficiency Standard and Rating		IEC 60034-30
Motor Efficiency Test Protocol		IEC 60034-2-1
Insulation Material	**STD**	Class F, 155ºC (311ºF), copper windings
	OPT	Class H, 180ºC (356ºF), copper windings [3,4]
Motor Filling Medium		Air
Temperature Rise		Class B
Maximum Fluid Temperature		40ºC (104ºF) continuous
Motor Protection	**Thermal**	Normally closed bimetallic switch in each phase, connected in series, 140ºC (284ºF) +/- 5ºC (41ºF) opening temperature [4]
	Leakage	Moisture detection probe in seal sensing chamber, motor housing, and junction chamber (for use with appropriate relay)
Seal Sensing Chamber Filling Medium		Non-toxic, white mineral oil
Bearings	**Inner**	1 x Single row deep groove ball bearing, permanently lubricated, preloaded
	Outer	1 x Single row deep groove ball bearing, permanently lubricated
	L_{10} Life	>100,000 hours
Motor Starter Types		Suitable for use with direct-on-line (DOL), electronic soft starters, and PWM type Variable Frequency Drives [1]
Maximum Starts per Hour		10 evenly spaced w/ DOL and soft starters; N/A with PWM type VFDs
Inverter Duty Rating		Motors meet NEMA MG1, part 31 requirements
Maximum Submergence		20 meters (65 feet)
Available Voltages		208, 230, 460, 575
Voltage Tolerance from Rated		+/-10%
Agency Approvals	**STD**	CSA
	OPT	Factory Mutual (FM)
Explosion Proof Rating	**OPT**	NEC 500 Class 1, Division 1, Group C & D, Class T3C max surface temp



The picture above may differ from the actual product.
For illustrative purposes only.

[1] Output filters may be required on VFDs. See document **DS-E00-001** for details.
[3] Not applicable with optional FM version.
[4] Thermals are set to 160ºC (320ºC) when configured with the optional Class H insulation (for standard, non-explosion-proof version only).

Motor Ratings

Motor Model	Input Power (P1)	Rated Power Output (P2)	Nominal RPM	Rated Voltage	Full Load Amps	Locked Rotor Amps	NEMA Code Letter	NEMA Service Factor	Motor Efficiency at % Load			Power Factor at % Load		
									100	75	50	100	75	50
A 60/12	8.0 kW	6.0 kW 8.1 HP	580	208 230 460 575	38.7 35.0 17.5 14.0	110 100 50 40	E	1.0	76.5	73.0	76.6	.735	.651	.515
A 90/12	11.6 kW	9.0 kW 12.1 HP	580	208 230 460 575	53.0 48.0 24.0 19.2	115 104 52 42	B	1.0	77.6	77.8	74.7	.607	.519	.399
A 120/12	15.3 kW	12.0 kW 16.1 HP	580	208 230 460 575	69.5 62.8 31.4 25.1	194 175 88 70	D	1.0	78.3	78.0	75.2	.612	.531	.414

DS-M06-031 REV: 1 DATE: 10/21 | © Sulzer | Specifications Subject to Change Without Notice

Submersible Mixer Type ABS RW

RW 650 | 25.6” Propeller, Direct Drive, 12 Pole, 3-Phase, 60 Hz

Cable Data

	Motor	Motor Voltage	Cable Qty	Cable Type	Cable Nominal Outside Diameter +/- .5mm (.02”)	
					Power	Ground
Power Cable	A 60/12	208	1	SOOW 8/4+16/3	24.4mm (0.96”)	Integrated w/ Power
		230	1	SOOW 8/4+16/3	24.4mm (0.96”)	Integrated w/ Power
		460	1	SOOW 10/7	20.7mm (0.82”)	Integrated w/ Power
		575	1	SOOW 10/7	20.7mm (0.82”)	Integrated w/ Power
	A 90/12	208	1	G-GC 6-3	26.7mm (1.05”)	Integrated w/ Power
		230	1	G-GC 6-3	26.7mm (1.05”)	Integrated w/ Power
		460	1	SOOW 8/4+16/3	24.4mm (0.96”)	Integrated w/ Power
		575	1	SOOW 10/7	20.7mm (0.82”)	Integrated w/ Power
	A 120/12	208	1	G-GC 6-3	26.7mm (1.05”)	Integrated w/ Power
		230	1	G-GC 6-3	26.7mm (1.05”)	Integrated w/ Power
		460	1	SOOW 8/4+16/3	24.4mm (0.96”)	Integrated w/ Power
		575	1	SOOW 8/4+16/3	24.4mm (0.96”)	Integrated w/ Power

	Motor Monitoring Type [5]	Cable Qty	Cable Type	Cable Nominal Outside Diameter +/- .5mm (.02”)
Control Cable	Std monitoring w/ SOOW Power Cable	N/A	Integrated w/ Power	Integrated w/ Power
	Std monitoring w/ G-GC Power Cable	1	SOOW 16/4	10.6mm (0.42”)
Cable Length	Standard: 10m (32 feet)	Optional: 15m (49 feet), 20m (65 feet), 30m (98 feet), Consult Factory for longer lengths		

[5] See motor protection on page 1.

Hydraulic Data

Type	Propeller, backswept design, 2 or 3-vane, w/ Seal Protection System													
Model	w/o Flow Ring							w/ Flow Ring						
	6521	6522	6531	6532	6533	6534	6535	6541	6542	6551	6552	6553	6554	6555
Propeller Diameter, mm (in.)	650 (25.6)	650 (25.6)	650 (25.6)	650 (25.6)	650 (25.6)	650 (25.6)	650 (25.6)	650 (25.6)	650 (25.6)	650 (25.6)	650 (25.6)	650 (25.6)	650 (25.6)	650 (25.6)
Propeller Nominal Speed, RPM	580	580	580	580	580	580	580	580	580	580	580	580	580	580
Propeller Vane Quantity	2	2	3	3	3	3	3	2	2	3	3	3	3	3
Propeller Pitch, degrees	10.8	12.8	10.8	12.8	13.5	15	19	10.8	12.8	10.8	12.8	13.5	15.0	19.0
Capacity, m³/s (GPM) [6]	0.49 (7,800)	0.52 (8,300)	0.72 (11,500)	0.77 (12,200)	0.79 (12,500)	0.85 (13,500)	0.92 (14,600)	0.48 (7,600)	0.51 (8,000)	0.70 (11,100)	0.75 (11,800)	0.77 (12,100)	0.82 (13,100)	0.90 (14,200)
Power, Pp, kW (HP) [7]	2.8 (2.1)	3.4 (2.5)	6.7 (5.0)	8.6 (6.4)	10.7 (8.0)	12.1 (9.0)	15.4 (11.5)	3.6 (2.7)	4.4 (3.3)	5.5 (4.1)	6.7 5.0)	7.4 (5.5)	12.1 (9.0)	11.5 (8.6)

[6] Flow rate in clean water at 20°C (68°F). [7] Power in clean water at 20°C (68°F).

Materials of Construction

		EC (Standard Construction)	CR (Stainless Steel Construction)
Power Cable		Chlorinated Polyethylene (CPE)	
Lifting Band		Stainless Steel 1.4401 (ASTM A276, Type 316)	
Lifting Shackle		Stainless Steel 1.4571 (ASTM A276, Type 316Ti)	
Guide Bracket Liner		Nylon (PA)	
Guide Bracket Rollers		Acetal (POM)	
Guide Bracket / Cable Connection Chamber		Cast Iron EN-GJL-250 (ASTM A48, Class 35B)	Stainless Steel 1.4408 (ASTM A743, Grade CF8M)
Motor Housing		Cast Iron EN-GJL-250 (ASTM A48, Class 35B)	Stainless Steel 1.4571 (ASTM A276, Type 316Ti)
Seal Housing		Cast Iron EN-GJL-250 (ASTM A48, Class 35B)	Stainless Steel 1.4408 (ASTM A743, Grade CF8M)
Motor Shaft		Stainless Steel 1.4021 (ASTM A276, Type 420)	Stainless Steel 1.4404 (ASTM A276, Type 316L)
Propeller Shaft		Integrated with Motor Shaft	
Propeller		Stainless Steel 1.4571 (ASTM A276, Type 316Ti)	
Flow Ring [8]		Stainless Steel 1.4571 (ASTM A276, Type 316Ti)	
Seal Protection System		Stainless Steel 1.4581 (ASTM A351, Grade CF8M)	
Solids Deflection Ring		Nitrile Rubber (NBR / Buna-N) *Optional: Fluorocarbon Rubber (FKM / Viton®)*	
External Hardware		Stainless Steel 1.4401 (ASTM A276, Type 316)	
O-Rings and Cable Glands		Nitrile Rubber (NBR / Buna-N) *Optional: Fluorocarbon Rubber (FKM / Viton®)*	
Mechanical Seals	Outer	Silicon Carbide / Silicon Carbide, Nitrile, 316 SS *Optional: Silicon Carbide / Silicon Carbide, Viton®, 316 SS*	
	Inner	Carbon / Chrome Steel, Nitrile, 316 SS	
Outer Bearing Lip Seal		Nitrile Rubber (NBR / Buna-N)	
Coating/Protection		Two-part epoxy, blue, 120µm (4.7 mil) DFT *Optional: Two-part epoxy, blue, 400 µm (15.7 mil)*	N/A

[8] Only applicable to “w/ Flow Ring” models.

DS-M06-031 REV: 1 DATE: 10/21 | © Sulzer | Specifications Subject to Change Without Notice

Submersible Mixer Type ABS RW

RW 650 | 25.6” Propeller, Direct Drive, 12 Pole, 3-Phase, 60 Hz

General Data (Standard Materials of Construction & Cable Length)

	w/o Flow Ring			w/ Flow Ring		
	A 60/12	A 90/12	A 120/12	A 60/12	A 90/12	A 120/12
≈ Mixer Weight, kg (lbs)	155 (342)	182 (401)	214 (472)	173 (381)	200 (441)	232 (512)
Guide Bracket Mast Size	4” square					

DS-M06-031 REV: 1 DATE: 10/21 | © Sulzer | Specifications Subject to Change Without Notice

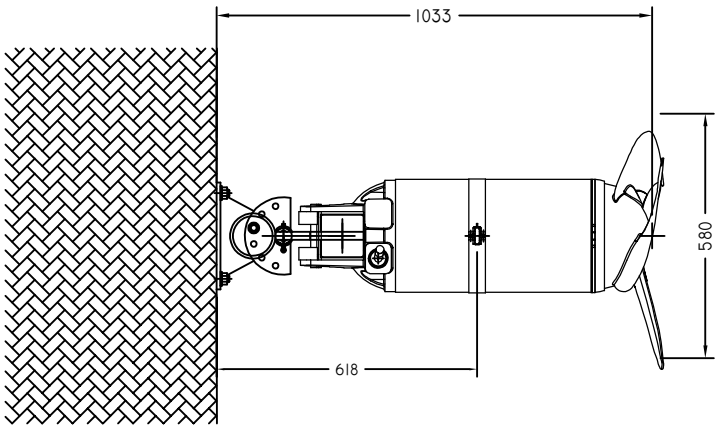

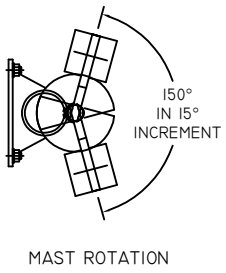

MAST ROTATION

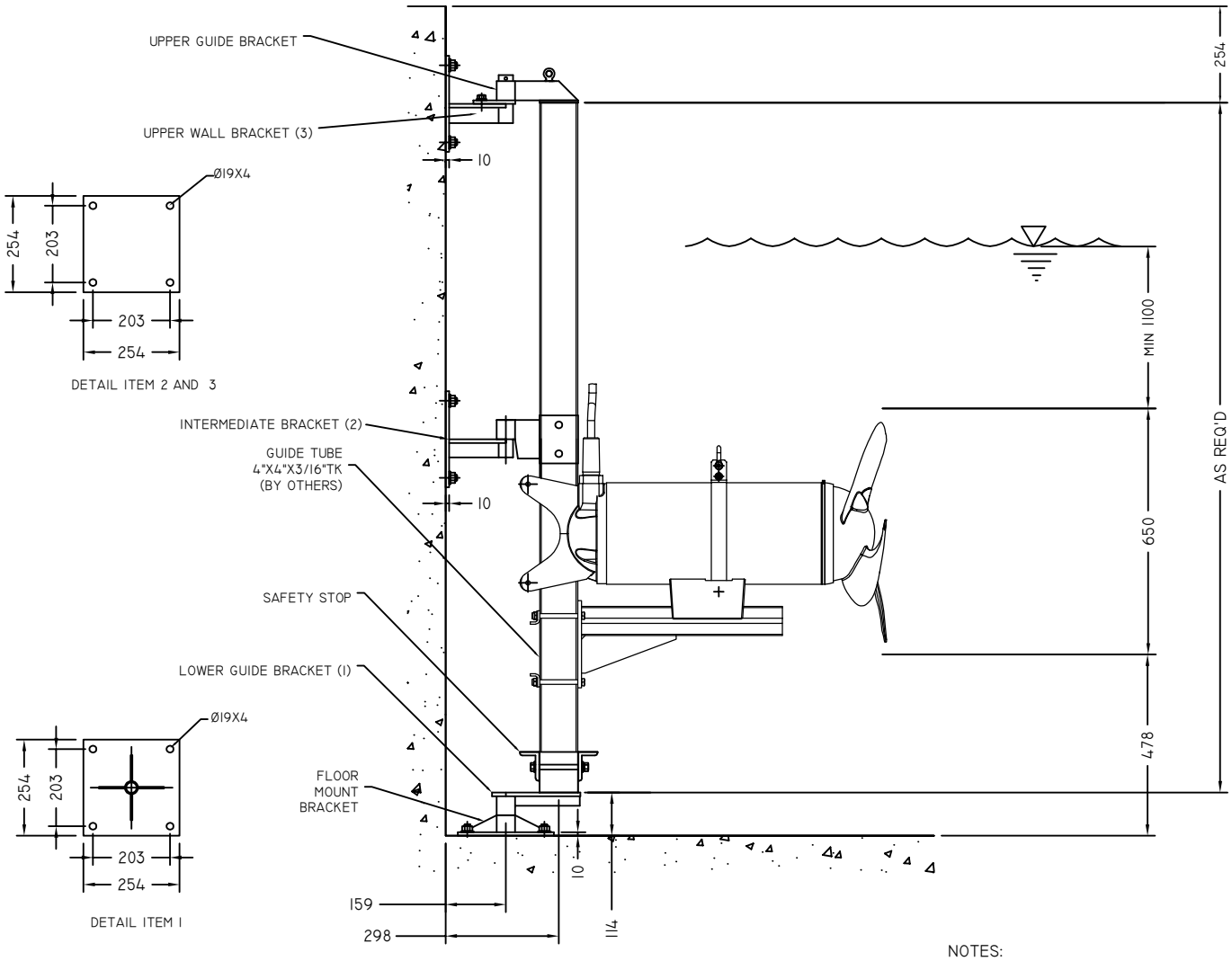

NOTES:
I. ANCHOR BOLTS BY OTHERS
II. GUIDE TUBE BY OTHERS
III.LIFTING ACCESSORIES BY OTHERS

WEIGHT 209KG

SULZER

DESCRIPTION:
INSTALLATION DRAWING
RW652I-A60/12 W/O FR W/O VR
4" SQ GUIDE RAIL /W INTER BRKT,304SS

DRAWN BY:	CC
DATE:	MAY 30,2022
REV:	0
DWG NO.	CA000583

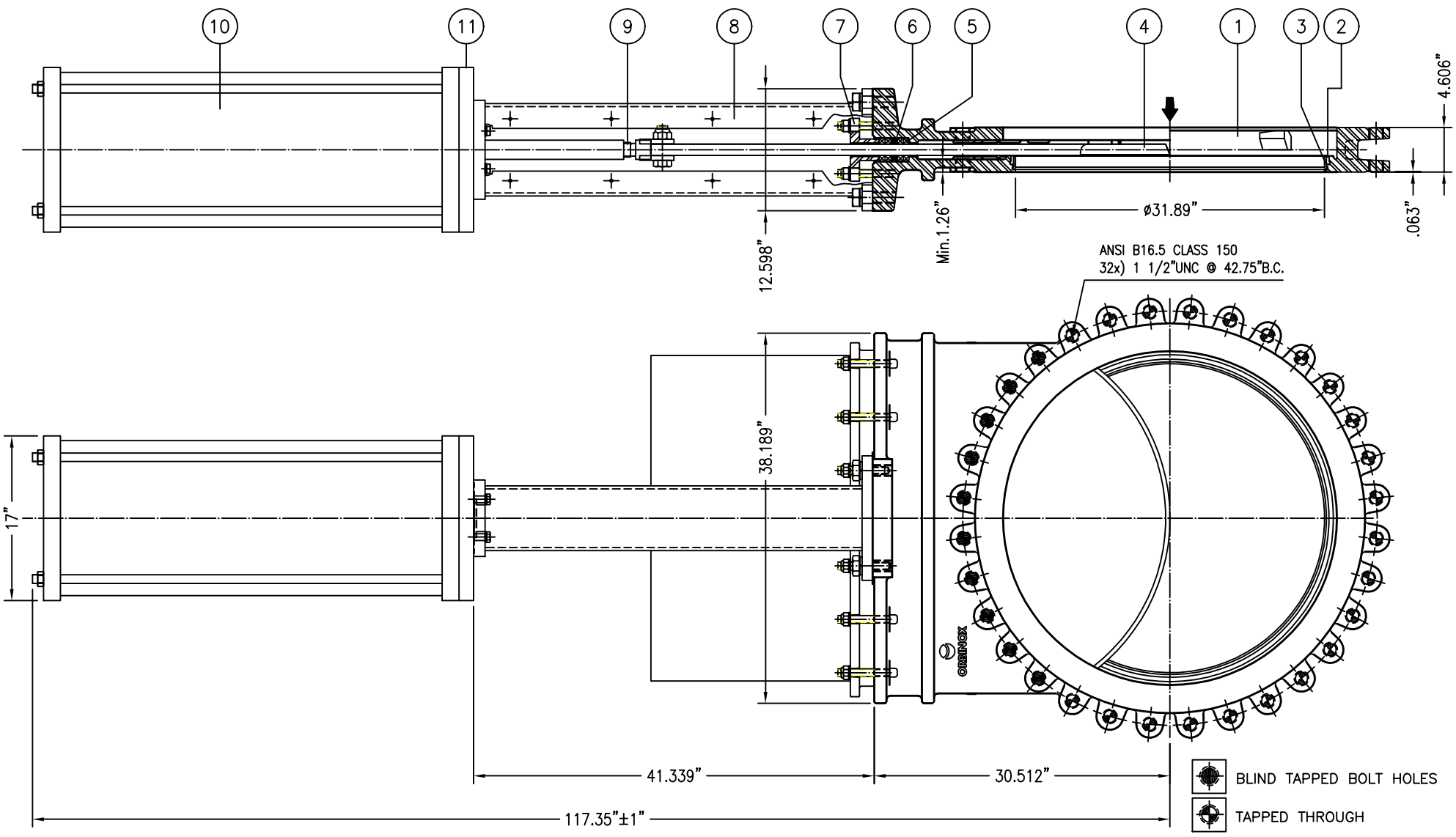

				8	YOKE	1	CARBON STEEL DIN-1.0044 (ASTM A570Gr.40)
				7	PACKING GLAND	1	CF8
				6	O-RING	–	EPDM (max. 120°C)
–	BOLTS&NUTS	–	ST.ST. A2	5	PACKING	–	SYNTHETIC+PTFE (pH 2-13 max.240°C)
11	ADAPTER	1	CARBON STEEL DIN-1.0044 (ASTM A570Gr.40)	4	GATE	1	AISI304
10	CYLINDER	1	CYLRDC 16"x 37"	3	SEAT RING	1	AISI304
9	COUPLER	1	AISI303	2	SEAT	1	EPDM (max. 120°C)
NUMBER	PART NAME	QUANTITY	MATERIAL	NUMBER	PART NAME	QUANTITY	MATERIAL

NUMBER	PART NAME	QUANTITY	MATERIAL
1	BODY	1	CF8

Rev.	Modification	Date	Name
B			
C			
D			
E			
F			
G			

36"Ser 20-3434R-Cyl

	DATE	NAME
DRAWN BY	12/05/10	MOMO
CHECKED BY	12/05/10	PM.
APPROVED BY	12/05/10	PM.

SCALE:

Designation: 36" SER. 20 KNIFE GATE VALVE ET WITH DA PNEUMATIC ACTUATOR

ORBINOX

SERIES PA

PNEUMATIC CYLINDERS FOR VALVE ACTUATION

BORE SIZE: 3 1/4″ TO 20″ • RATING: 150 PSIG (1000 KPA)

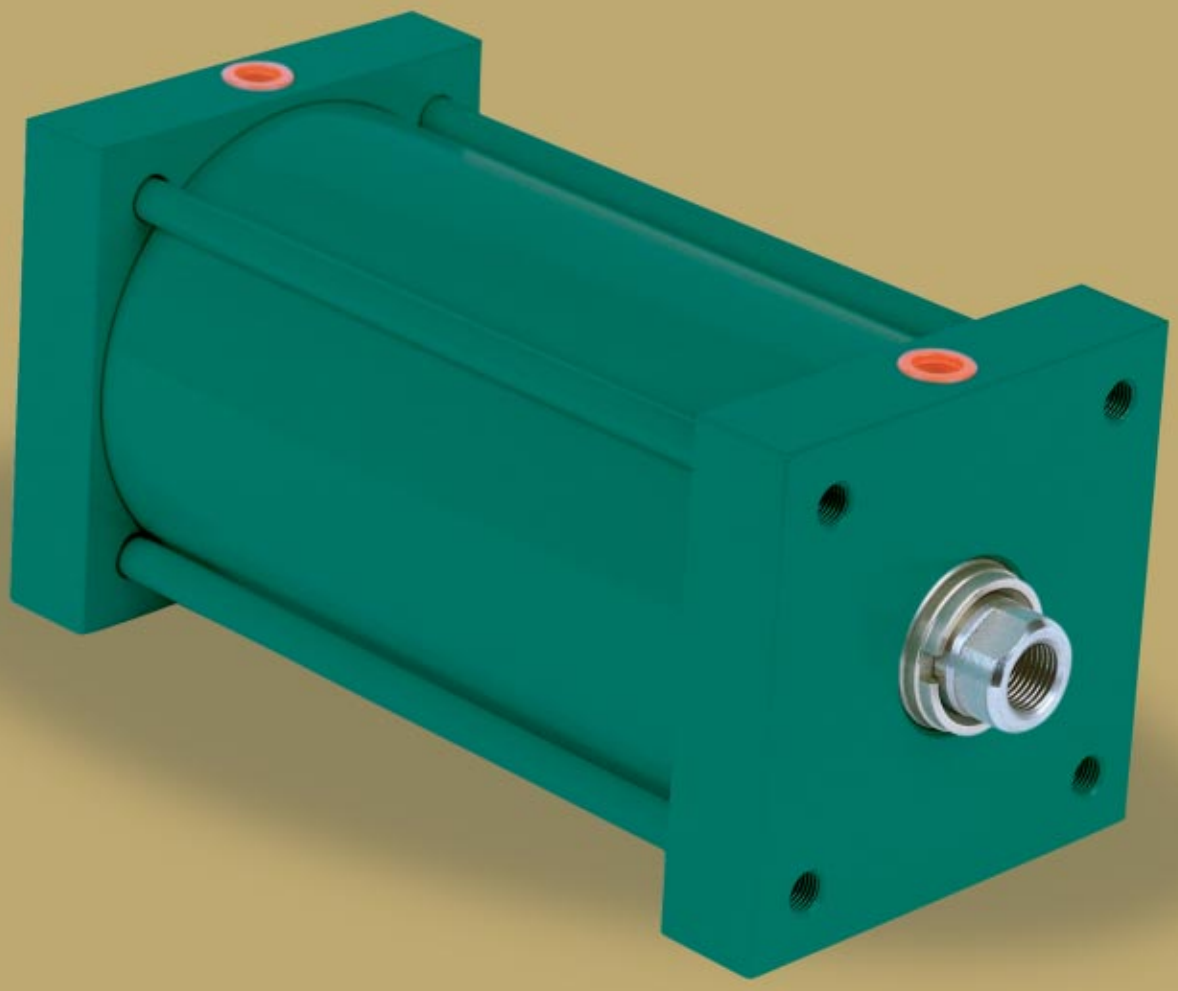

RDC CONTRÔLE

PNEUMATIC CYLINDERS FOR VALVE ACTUATION FEATURES

The PA Series of valve actuators are designed to automate valve operation. These actuators can be adapted for many applications,including special needs. Their compact design allows for easy installation. In addition, RDC Controle fabricates them under strict quality conditions.

HEAD & CAP
Numerically controlled machined from hot rolled steel plates ASTM A36 or better.

PISTON PACKING
2 pressure sensitive "U" cups for better sealing and durability.

CYLINDER BARREL
Bore size from 3 1/4 to 12": Heavy wall steel tubing with a polished chrome plated interior for better durability.

Bore size from 14" to 20": Thermoset fiber reinforced composite, specially designed for cylinder tubing for weight reduction and corrosion resistance.

TIE RODS AND NUTS
Bore size from 3 1/4 to 12": Made from STAINLESS STEEL to limit corrosion.

Bore size from 14" to 20": High strength steel barstock along with zinc plated steel nuts (Grade 5).

GLAND BUSHING
Cartridge type, made from Bronze SAE 660. Seals can be replaced without dismantling the cylinder.

PISTON ROD
High carbon content steel SAE 1045, ground, polished and chrome plated. (Chrome plated #316 stainless steel available on request).

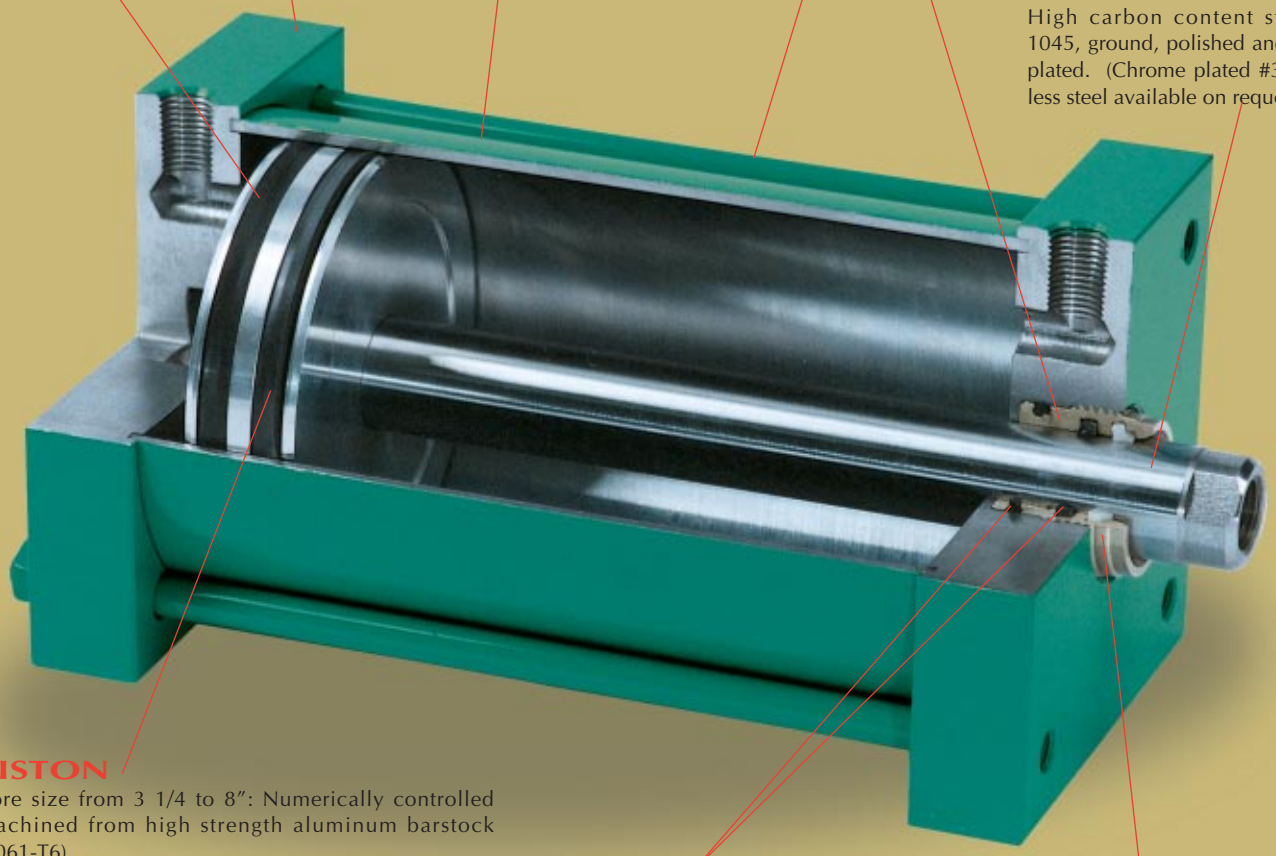

PISTON
Bore size from 3 1/4 to 8": Numerically controlled machined from high strength aluminum barstock (6061-T6).
Bore size from 10" to 20": Made from mild steel. A wear strip is added on the outside diameter to protect the tube and assure a perfect fit.

PISTON WEAR STRIP
Bore size from 10" to 20": It consists of a teflon tape filled with particles of bronze and glass, for smoother piston operation.

SEALS AND PACKING
"U" CUP AND "O" RING used for added security. A high durometer nitrile material is offered as a standard for a temperature rating from -34°C to 120°C (-30°F to 250°F). For temperature range up to 250°C (450°F), fluorocarbon (viton) seals and packings are available

ROD WIPER
Stops dust and other particles from entering into the cylinder. Standard material is polyurethane. It can be replaced by fluorocarbon (viton) for higher temperature applications.

SERIES PA

PNEUMATIC CYLINDERS FOR VALVE ACTUATION
A0 - BASE MOUNTING

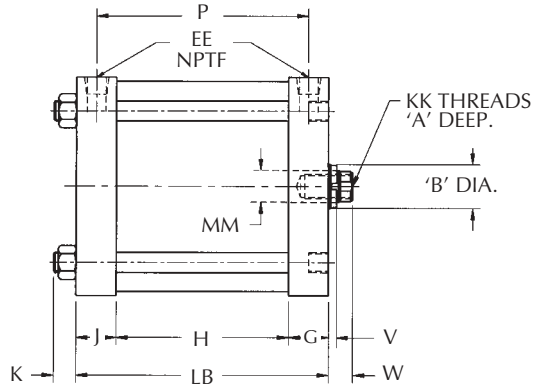

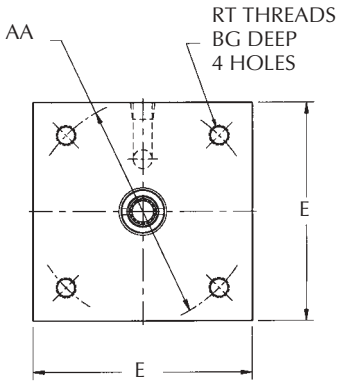

DIMENSIONS (IN.)

BORE	MM ROD SIZE	KK UNF	A	AA	B	BG	E	EE NPTF	G	J	K	RT UNF	V	W	ADD STROKE		
															LB	H	P
31/4	1	5/8 - 18	11/2	3.900	1.375	5/8	3 3/4	1/4	1	1	3/8	3/8 - 24	1/4	3/4	3	1	2
4	1	5/8 - 18	11/2	4.700	1.375	5/8	4 1/2	1/4	1	1	3/8	3/8 - 24	1/4	3/4	3	1	2
5	1	5/8 - 18	11/2	5.800	1.375	1/2	5 1/2	1/4	1	1	1/2	1/2 - 20	1/4	3/4	3 1/8	1 1/8	2 1/8
6	1	5/8 - 18	11/2	6.900	1.375	1/2	6 1/2	1/4	1	1	1/2	1/2 - 20	1/4	3/4	3 1/8	1 1/8	2 1/8
7	1	5/8 - 18	11/2	8.100	1.375	5/8	7 1/2	3/8	11/4	11/4	5/8	5/8 - 18	1/4	3/4	3 3/4	1 1/4	2 1/2
8	1	5/8 - 18	11/2	9.100	1.375	5/8	8 1/2	3/8	11/4	11/4	5/8	5/8 - 18	1/4	3/4	3 3/4	1 1/4	2 1/2
10	13/8	1 - 14	2	11.200	1.875	3/4	10 5/8	3/8	11/2	11/2	3/4	3/4 - 16	5/16	1	4 3/4	1 3/4	3 1/4
12	13/8	1 - 14	2	13.300	1.875	3/4	12 3/4	1/2	11/2	11/2	3/4	3/4 - 16	5/16	1	4 3/4	1 3/4	3 1/4
14	13/8	1 - 14	2	15.400	1.875	7/8	14 3/4	1/2	13/41	13/41	7/8	7/8 - 14	5/16	1	5 1/2	2	3 3/4
16	2	1 1/2-12	21/2	17.800	2.500	-	17	1/2	3/4	3/4	1	-	3/8	11/2	5 5/8	2 1/8	3 7/8
18	2	1 1/2 -12	21/2	20.000	2.500	-	19	3/4	13/4	13/4	1 1/8	-	3/8	11/2	5 7/8	2 3/8	4 1/8
20	2	1 1/2 -12	21/2	22.300	2.500	-	21	3/4	13/4	13/4	11/4	-	3/8	11/2	6 1/8	2 5/8	4 3/8

ROD THREADS

TYPE -4-
Female threads (standard)

TYPE -1-
Male threads (optionnal)

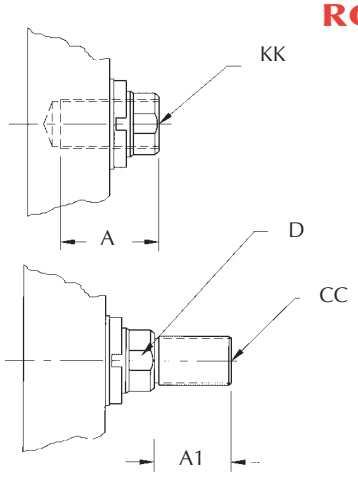

DIMENSIONS (IN.)

ROD SIZE	A1	CC UNF-2A	D	A	KK UNF-2B
1	1 1/8	3/4 - 16	7/8	1 1/2	5/8- 18
1 3/8	15/8	1 - 14	1 1/8	2	1 - 14
2	21/4	1 1/2 - 12	1 11/16	2 1/2	11/2 - 12

RDC Contrôle can also manufacture special rod ends to answer your specific needs.
Use thread type –9– in model number and specify required dimensions

SERIES PA

PNEUMATIC CYLINDERS FOR VALVE ACTUATION
OPTIONAL MOUNTINGS

E3 – SQUARE HEAD MOUNTING
BORE SIZE: 7" TO 20" ONLY

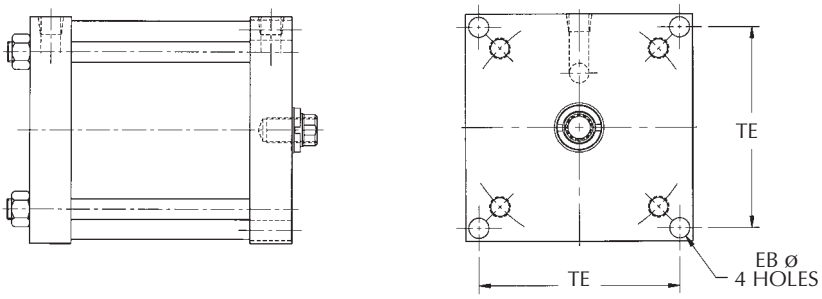

X3 – EXTENDED TIE RODS MOUNTING

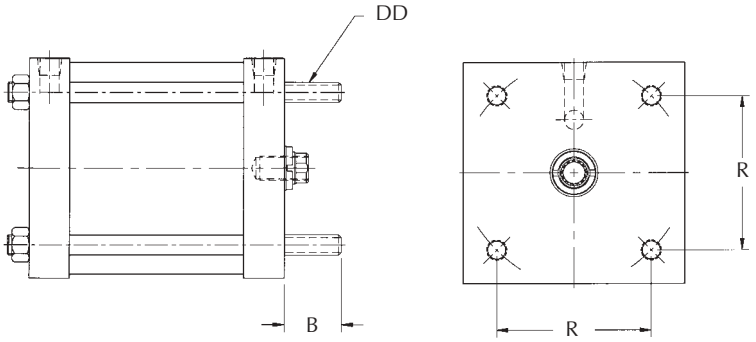

BORE	EB	TE	BB	DD UNF	R
3 1/4	–	–	1 3/8	3/8 – 24	2.76
4	–	–	1 3/8	3/8 – 24	3.32
5	–	–	1 3/4	1/2 – 20	4.10
6	–	–	1 3/4	1/2 – 20	4.88
7	9/16	6.75	2	5/8 – 18	5.73
8	11/16	7.57	2	5/8 – 18	6.44
10	13/16	9.40	2 1/4	3/4 – 16	7.92
12	13/16	11.10	2 1/4	3/4 – 16	9.40
14	15/16	12.87	2 1/2	7/8 – 14	10.90
16	1 1/16	14.85	2 3/4	1 – 14	12.59
18	1 3/16	16.69	3 1/4	1 1/8 – 12	14.14
20	1 5/16	18.46	3 1/4	1 1/4 – 12	15.77

RDC Contrôle can also adapt any special mounting to your needs. Consult our engineering department.

VALVE MOUNTINGS, OPTIONS AND ACCESSORIES

RDC Contrôle can also design and fabricate your valve mountings. In addition, we can also add a complete range of accessories to answer your automation requirements.

CYLINDER OPTIONS
- Stainless steel piston rod
- Double ended cylinder
- Viton seals (450°F)
- Piston rod scrapper
- Special exterior finish
- Water operation (AWWA)
- Spring return (fail safe)
- Multiple stage cylinder

VALVE TYPES
- Knife gate
- Wedge gate
- Globe
- Pinch
- Sluice

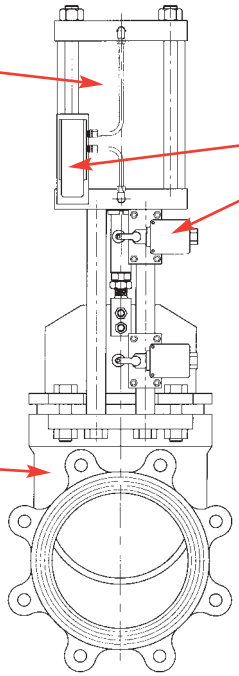

AUTOMATION ACCESSORIES
- Control valve:
  - Manual
  - Solenoid
- Limit switches
- Positioners
- Position transmiters

OTHER OPTIONS
- Stroke adjustment
- Manual overide
- Stainless steel mounting
- Air fail safe system

SERIES PA

PNEUMATIC CYLINDERS FOR VALVE ACTUATION
MODEL NUMBERING

Series	Bore	Rod size	Rod threads	Cushions	Mounting	Option suffix	Stroke
PA	G - 3 1/4 H - 4 K - 5 L - 6 M - 7 N - 8 P - 10 R - 12 S - 14 T - 16 V - 18 W - 20 Z -OTHERS	E - 1 G - 1 3/8 J - 2 K - 2 1/2 Z - OTHERS	1 - Male (opt.) 4 - Female (STD) 5 - Added stud 9 - Special	N - none	AO - Base E3 - Square head X3 - Extended tie rods Z9 - Special or Valve mounting State: - Make - Type - Size	(Blank if none) A - Stroke adjustment D - Double-rod E - Special exterior finish J - Rod extention S - Stainless steel piston rod T - Stop tube V - Viton seals for temp. up to 250°C (450°F) W -Water operation specs. AWWA C-504 X - Spring to extend Y - Spring to retract Z - Others	
PA	L	E	4	N	AO	V	11
Series PA	6″Bore	1″ Rod	Female threads	No cushions	Base mount	Viton seals	11″ stroke

REPLACEMENT PARTS

Spare parts and seal kits can be ordered, using the part number prefix, followed by the cylinder model number
EXAMPLE: 20–PALE4NAO-11 (piston).
It is recommended to provide the cylinder serial number to facilitate inquiries for part replacement.

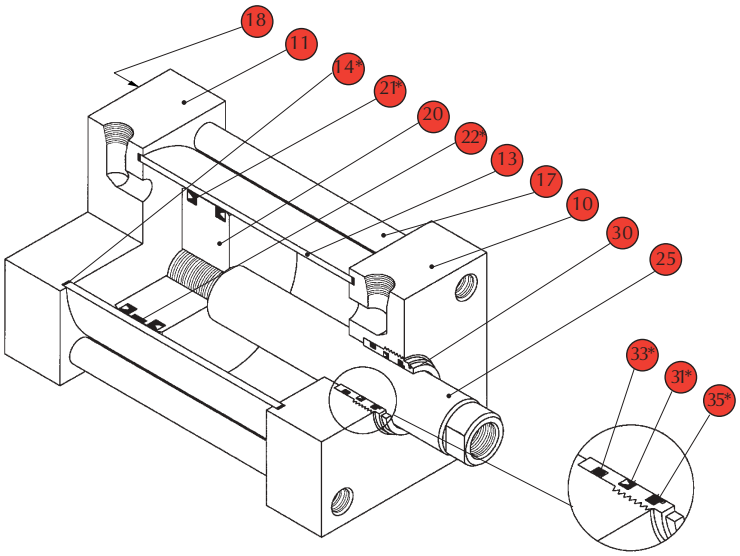

Pieces	Description	Qty
10	Head	1
11	Cap	1
13	Barrel	1
14*	Barrel seals	2
17	Tie rods	4
18	Tie rod nuts	4
20	Piston	1
21*	Piston packings	2
22*	Wear strip (10″ and up)	1
25	Piston rod	1
30	Gland bushing	1
31*	Gland packing	1
33*	Gland seal	1
35*	Piston rod wiper	1

Seal kit	
29	for piston (parts #21 and #22)
39	for bushing (parts #31, #33 and #35)
99	Complete (parts indicated with an *)

A Maintenance & Operation Manual (#8 - PA) is available for more detailled maintenance instructions of Series PA actuators.

Torque chart (minimum & maximum)

Bore size	Tie rods		Gland bushing	
	Dia.	Torque (ft-lbs)	Rod dia.	Torque (ft-lbs)
3 1/4 - 4	3/8	6-15	1″	30 - 50
5 - 6	1/2	15-30	1″	30 - 50
7	5/8	20-70	1″	30 - 50
8	5/8	30-70	1″	30 - 50
10	3/4	55-110	1 3/8	40 - 60
12	3/4	70-110	1 3/8	40 - 60
14	7/8	100-180	1 3/8	40 - 60
16	1	150-350	2″	55 - 75
18	1 1/8	220-500	2″	55 - 75
20	1 1/4	300-720	2″	55 - 75

CONTRÔLE

MANUFACTURER
THERMOCOUPLES - RTD'S
CYLINDERS

1100 Michele-Bohec, Blainville (Quebec) J7C 5N5
Tel.: (450) 434-0216 - Fax: (450) 434-0219 - Toll free: 1-800-363-2264
Internet: www.rdccontrol.com

MRK-101 Rev : 1

ET SERIES 20 KNIFE GATE VALVE

ORBINOX
VALVE SOLUTIONS IN MORE THAN 70 COUNTRIES

The SERIES 20 (ET) model knife gate valve is a lug type valve designed according to MSS SP-81 and TAPPI TIS 405-8 for general industrial service applications. The design of the body and seat assures nonclogging shut off on suspended solids in industries such as Pulp & Paper, Power Plants, Mining, Chemical Plants, Wastewater Treatment Plants, Food & Beverage, etc

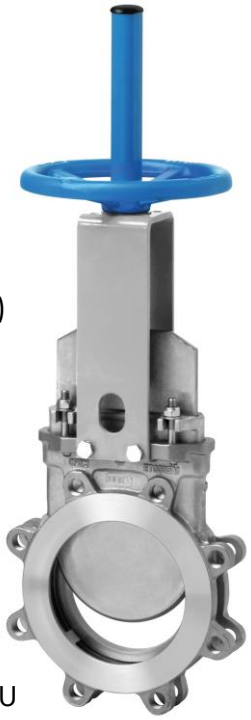

Product description:

- Uni-directional lug type knife gate valve destined for open/close or control installations
- Size range of DN 2"-36" (larger sizes upon request). See Dimension Charts for pressure rating
- Rising stem as standard. Non-rising stem also available
- Standard flange connection: DIN PN10 (EN 1092-2) and ANSI B16.5 (class 150) Others available upon request
- Manual (handwheel, chainwheel, lever and bevel gear), pneumatic (single and double-acting), electric and hydraulic actuation options available
- Directives: 2006/42/EC (MACHINES), 2014/68/EU (PED) Fluid: Group 1(b), 2 (Cat. I. mod. A) and 2014/34/EU (ATEX)

Features:

- Lug type one piece cast stainless steel body with internal cast-in gate wedges and guides
- Port design as per the MSS SP-81 and TAPPI TIS 405-8 standards
- Stainless steel gate polished both sides to avoid jamming and seat damage
- Standard EPDM resilient seat. Metal-to-metal seat, other seat materials, as well as high performance rings and deflection cones available
- Long life PTFE impregnated synthetic fibre plus EPDM o-ring packing with easy access and adjustable gland follower. Wide range of packing materials available
- RAL-5015 blue epoxy-coating on all cast iron/carbon steel components
- Automated valves provided with gate guards in accordance with EU Safety Standards. Only in EU
- Other options: bonnets, V-ports, flush ports, special materials, fabricated valves, etc.
- Actuation accessories: limit & proximity switches, mechanical stops, positioners, solenoid valves, manual overrides, locking devices, fail safe systems, stem extensions and floor stands

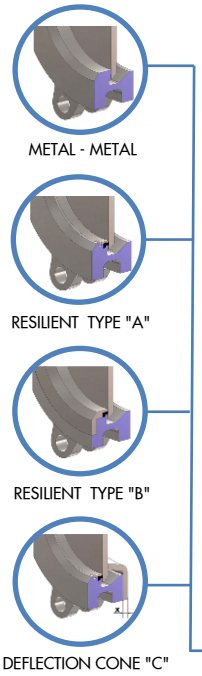

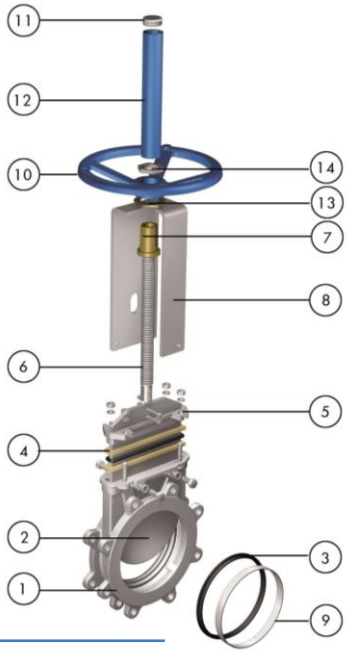

STANDARD PARTS LIST

	Part	Stainless Steel:
1	Body	CF8M
2	Gate	AISI 316
3	Seat	Metal/Metal, EPDM
4	Packing	PTFE impreg. synth. fibre and EPDM o-ring
5	Gland Follower	CF8M
6	Stem	Stainless Steel
7	Stem Nut	Brass
8	Yoke	AISI 304 / Epoxy-coated carbon steel
9	Seat Retainer Ring	AISI 316
10	Handwheel	GJS400 (GGG40)
11	Cap	Plastic
12	Stem Protector	Epoxy-coated carbon steel
13	Friction Washer	Brass
14	Nut	Zinc-plated carbon steel

* Refer to full catalogue for complete details

ET SERIES 20 KNIFE GATE VALVE

ORBINOX
VALVE SOLUTIONS IN MORE THAN 70 COUNTRIES

DIMENSIONS Handwheel Rising Stem

DN(")	Pressure	N	A	B	C	D	E	F	ØG	H	Weight (lbs.)
2"	150 psi	1,96	1,89	4,88	4	3,85	5,35	1,85	8,86	16,53	18
3"	150 psi	3,14	2	5,87	4	4,68	6,38	1,85	8,86	18,50	22
4"	150 psi	3,81	2	6,65	4	5,47	7,36	1,85	8,86	20,43	28
5"	150 psi	4,6	2,24	6,65	4	5,90	8,78	1,8	8,86	24,13	35
6"	150 psi	5,51	2,24	7,75	4	6,50	9,33	1,85	8,86	25,27	44
8"	150 psi	7,24	2,75	9,72	4,80	7,99	12,16	2,64	12,20	32,28	70
10"	150 psi	9,05	2,75	11,73	4,80	9,17	13,58	2,64	12,20	38,81	103
12"	150 psi	10,82	2,99	13,74	4,80	10,74	15,35	2,72	16,14	42,16	143
14"	150 psi	12	2,99	15,39	7,60	12,28	17,04	2,60	16,14	49,01	209
16"	150 psi	13,84	3,50	17,28	7,60	13,66	18,81	2,60	16,14	52,16	268
18"	150 psi	15,35	3,50	19,01	7,75	16,33	21,73	2,64	21,65	59,49	352
20"	150 psi	17,12	4,49	21,33	7,75	17,71	24,05	2,64	21,65	63,66	444
24"	150 psi	20,55	4,49	25,08	7,75	19,72	27,44	2,64	21,65	74,13	638

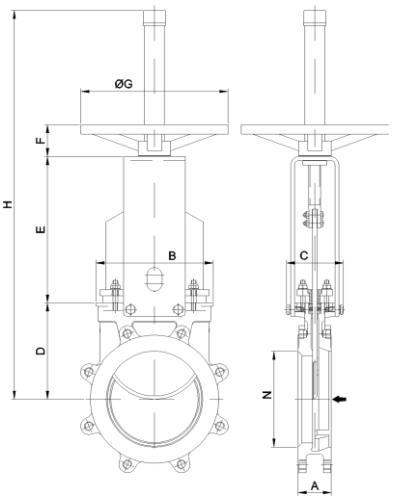

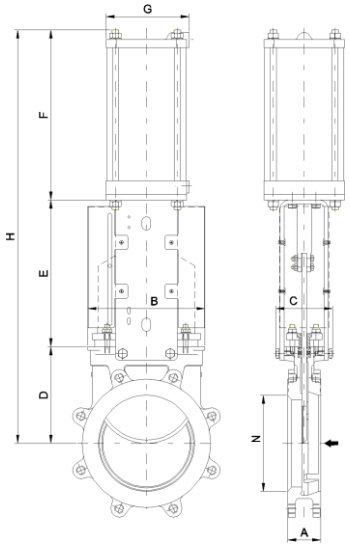

DIMENSIONS Pneumatic Actuator (D/A)

DN(")	Pressure	N	A	B	C	D	E	F	G	H	Weight (lbs.)	Standard Cyl.	Connect.
2"	150 psi	1,96	1,89	4,88	4	3,85	5,35	7,00	4,53	16,22	22	C4"-2.44"	¼"G
3"	150 psi	3,14	2	5,87	4	4,68	6,38	8,30	4,53	19,37	26	C4"-3.74"	¼"G
4"	150 psi	3,81	2	6,65	4	5,47	7,36	9,09	4,53	21,93	33	C4"-4.52"	¼"G
5"	150 psi	4,6	2,24	6,65	4	5,90	8,78	10,66	5,51	25,35	46	C5"-5.52"	¼"G
6"	150 psi	5,51	2,24	7,75	4	6,50	9,33	11,65	5,51	27,48	59	C5"-6.61"	¼"G
8"	150 psi	7,24	2,75	9,72	4,80	7,99	12,16	14,09	6,89	34,25	101	C6.30"-8.66"	¼"G
10"	150 psi	9,05	2,75	11,73	4,80	9,17	13,58	16,85	8,66	39,60	154	C8"-10.62"	3/8"G
12"	150 psi	10,82	2,99	13,74	4,80	10,74	15,35	18,81	8,66	44,93	195	C8"-12.60"	3/8"G
14"	150 psi	12	2,99	15,39	7,60	12,28	18,07	21,61	10,90	51,96	297	C10"-14.76"	3/8"G
16"	150 psi	13,84	3,50	17,28	7,60	13,66	18,81	23,58	10,90	56,06	356	C10"-16.73"	3/8"G
18"	150 psi	15,35	3,50	19,01	7,75	16,33	21,73	26,77	15,03	64,84	466	C12"-18.70"	1/2"G
20"	150 psi	17,12	4,49	21,33	7,75	17,71	24,05	28,74	15,03	70,51	638	C12"-20.67"	1/2"G
24"	150 psi	20,55	4,49	25,08	7,75	19,72	27,44	32,68	15,03	79,84	825	C12"-24.60"	1/2"G
30"	100 psi	26,37	4,60	33,15	12,60	24,57	37,00	38,77	17,48	100,35	1419	C14"-30.70"	3/4"G
36"	100 psi	31,88	4,60	38,19	12,60	30,51	43,30	47,32	20,27	121,14	1716	C16"-36.61"	3/4"G

DIMENSIONS Electric Actuator Rising Stem

DN(")	Pressure	N	A	B	C	D	E	F	ØG	H	I	J	L	M	Stem Ø X pich	Torque (ft.LBS)
2"	150 psi	1,96	1,89	4,88	4	3,86	5,35	14,84	6,30	17,87	10,43	9,80	2,44	9,37	0.79 x 0.16	7.4
3"	150 psi	3,14	2/51	5,87	4	4,68	6,38	16,69	6,30	19,72	10,43	9,80	2,44	9,37	0.79 x 0.16	7.4
4"	150 psi	3,81	2/51	6,65	4	5,47	7,36	18,46	6,30	21,49	10,43	9,80	2,44	9,37	0.79 x 0.16	7.4
5"	150 psi	4,6	2,24	6,65	4	5,90	8,78	20,31	6,30	23,34	10,43	9,80	2,44	9,37	0.79 x 0.16	11.1
6"	150 psi	5,51	2,24	7,75	4	6,50	9,33	21,45	6,30	44,17	10,43	9,80	2,44	9,37	0.79 x 0.16	14.8
8"	150 psi	7,24	2,75	9,72	4,80	7,99	12,16	26,25	6,30	49,40	10,43	9,80	2,44	9,37	0.98 x 0.2	22.2
10"	150 psi	9,05	2,75	11,73	4,80	9,17	13,58	28,85	6,30	52,00	10,43	9,80	2,44	9,37	0.98 x 0.2	33.3
12"	150 psi	10,82	2,99	13,74	4,80	10,74	15,35	31,22	7,87	54,37	11,14	10	2,55	9,76	0.98 x 0.2	51.8
14"	150 psi	12	2,99	15,39	7,60	12,28	17,04	34,44	7,87	57,59	11,14	10	2,55	9,76	1.38 x 0.24	81.4
16"	150 psi	13,84	3,50	17,28	7,60	13,66	18,81	37,60	12,40	60,75	15,31	13,22	3,58	11,25	1.38 x 0.24	118.4
18"	150 psi	15,35	3,50	19,01	7,75	16,33	21,73	44,96	12,40	73,63	15,31	13,22	3,58	11,25	1.38 x 0.24	140.6
20"	150 psi	17,12	4,49	21,33	7,75	17,71	24,05	48,11	15,74	76,77	15,31	13,34	3,58	11,25	1.38 x 0.24	199.8
24"	150 psi	20,55	4,49	25,08	7,75	19,71	27,44	56,85	15,74	85,51	15,31	13,34	3,58	11,25	1.57 x 0.27	333
30"	100 psi	26,37	4,60	33,15	12,60	24,57	34,76	70,03	19,68	111,49	16,92	14,37	4,61	11,93	1.97 x 0.31	407
36"	100 psi	31,88	4,60	38,19	12,60	30,67	41,18	80,11	19,68	121,26	16,92	14,37	4,61	11,93	2.36 x 0.35	627

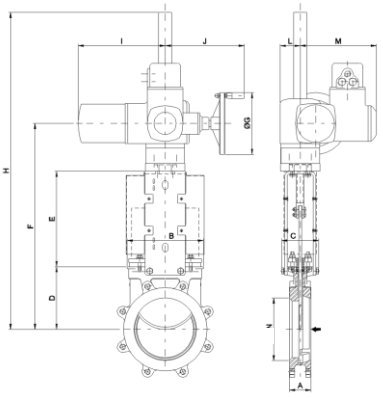

Technical Data of Ball Valves

Pressure-temperature diagram

For PVC ball valve type 546

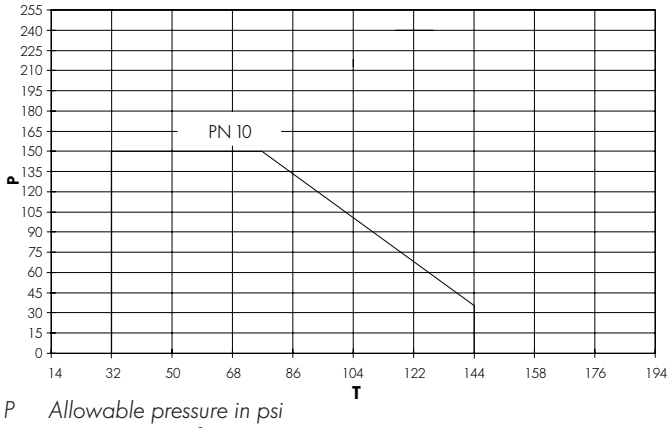

P Allowable pressure in psi
T Temperature in °F

For CPVC ball valve type 546

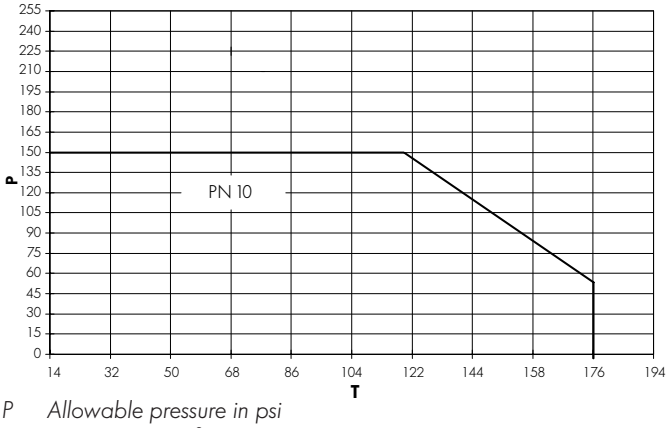

P Allowable pressure in psi
T Temperature in °F

Pressure loss for ball valve type 546

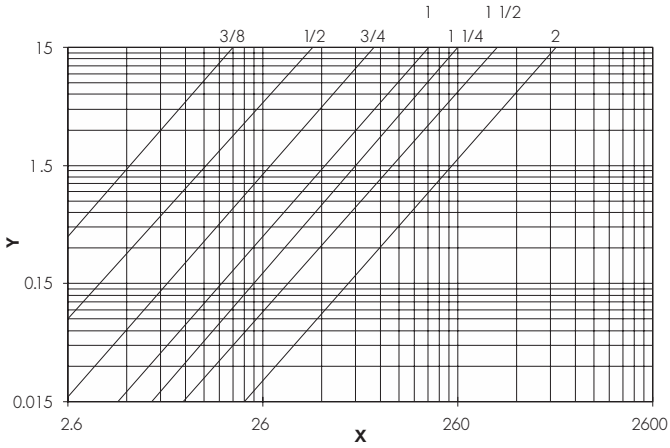

Medium: water, 68°F
X Flow volume (gpm)
Y Pressure loss Δp (psi)

Flow characteristics for ball valve type 546

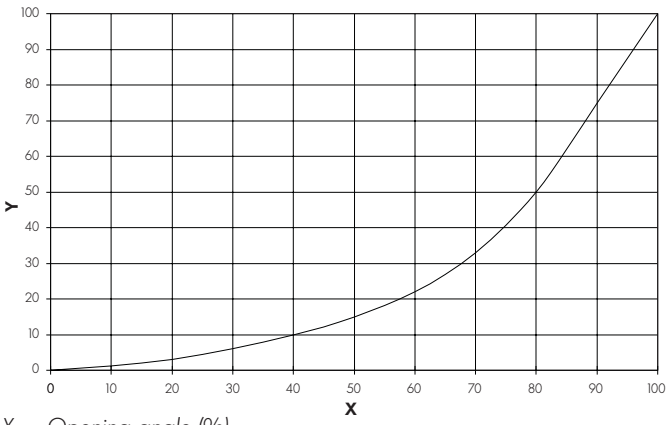

X Opening angle (%)
Y C_V-value (%)

Torque for ball valve type 546 (reference values)

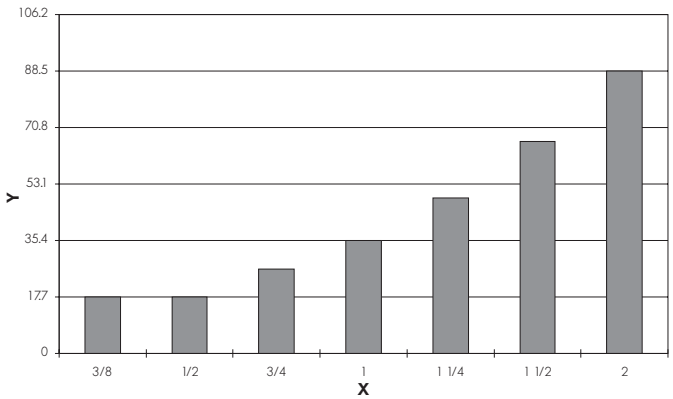

X Nominal diameter (inch)
Y Torque (in-lbf)

TAGS:
23-HV-130
23-HV-330

Fundamentals for Ball Valves, hand operated

Ball Valve Type 546

Pressure-Temperature Diagram Ball Valve in PP-H (service life 25 years, medium water or similar media)

For applications with temperatures in the range of the dotted lines, please contact your George Fischer representative.

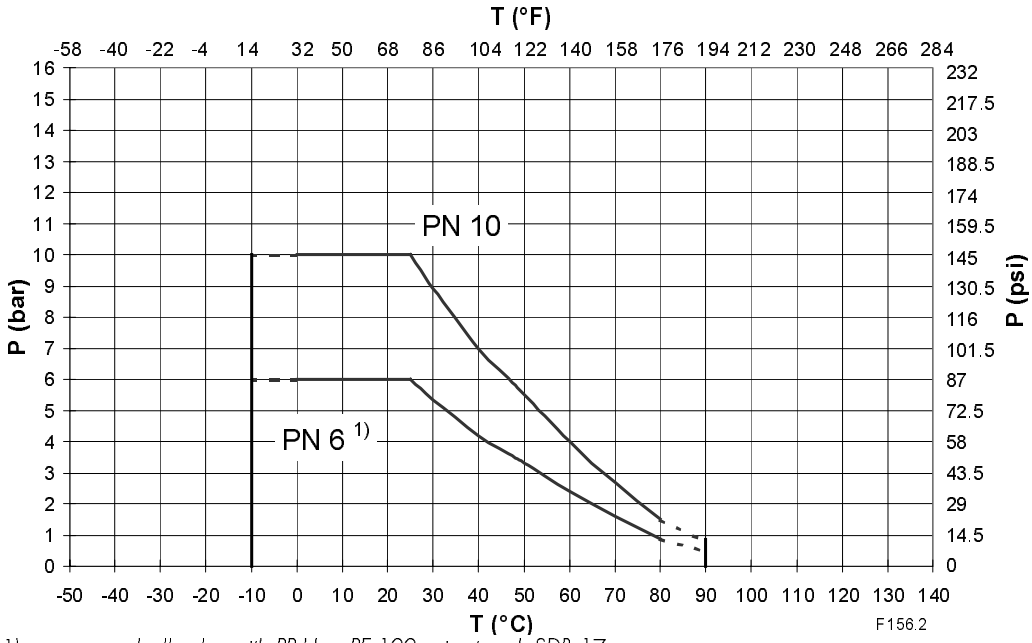

1) *e.g. ball valve with PP-H or PE 100 spigot end SDR 17*
T *Temperature in °C / °F*
p *permissible pressure in bar / psi*

Pressure-Temperature Diagram Ball Valve Type 546 in PVDF (service life 25 years, medium water or similar media)

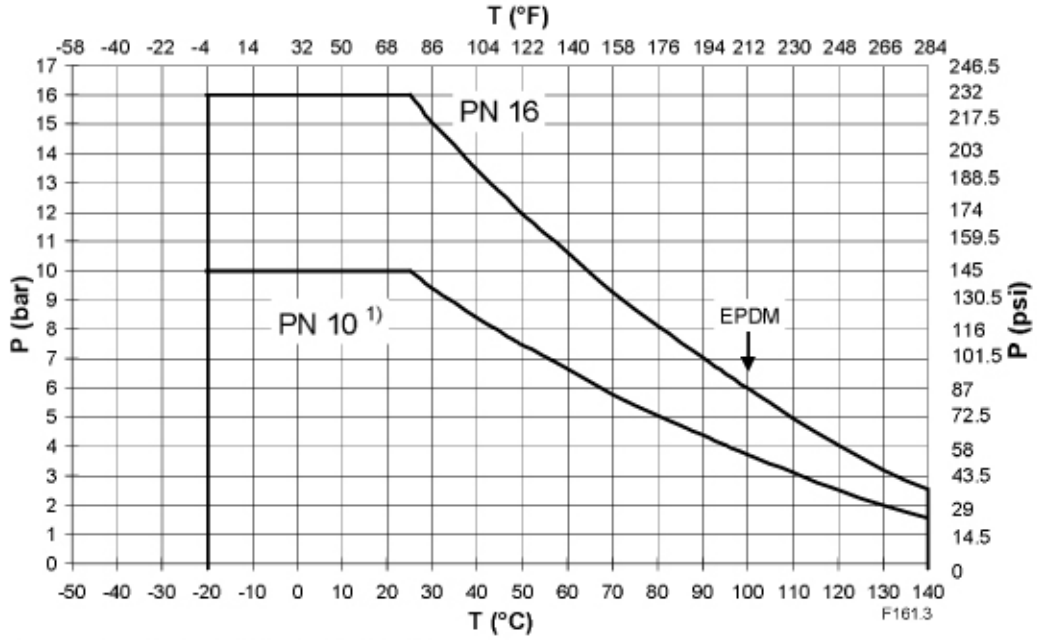

1)	*e.g. ball valve with threaded sockets*
EPDM	*EPDM-seal max. 100°C*
T	*Temperature in °C / °F*
p	*permissible pressure in bar / psi*

Operating Torque for Ball Valve Type 546 (Average Values)

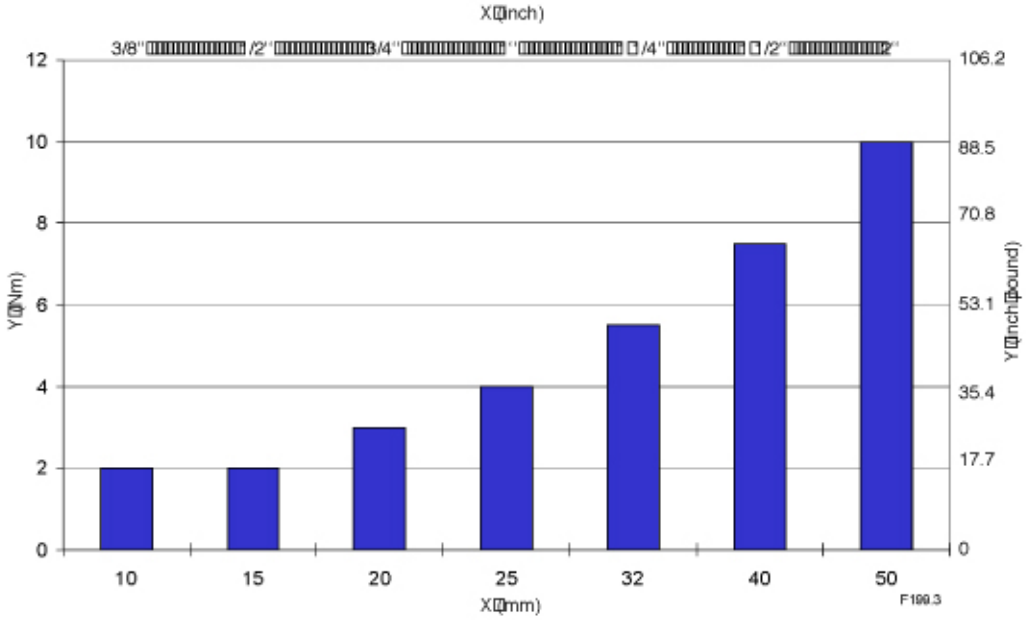

X *Size DN (mm / inch)*
Y *Torque (Nm / inch pound)*

Depending on the application (e.g. operating speed, fluid, temperature, etc.). about 2 times the operating torque should be taken for sizing actuators.

Pressure Loss for Ball Valve Type 546

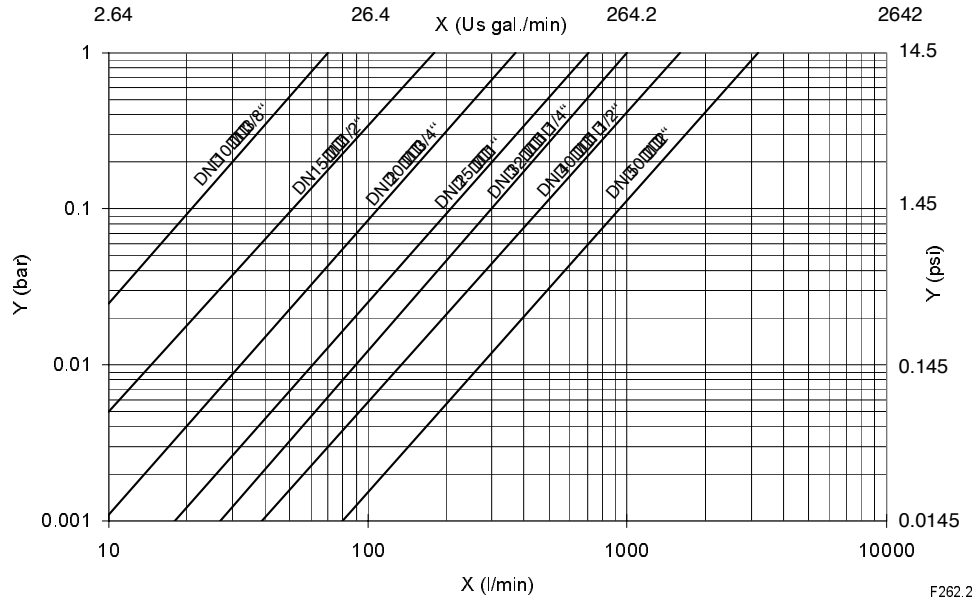

Medium: water, 20 °C

X *Flow rate (l/min), (US gal./min)*

Y *Pressure loss Δp (bar), (psi)*

Flow Characteristics for Ball Valve Type 546

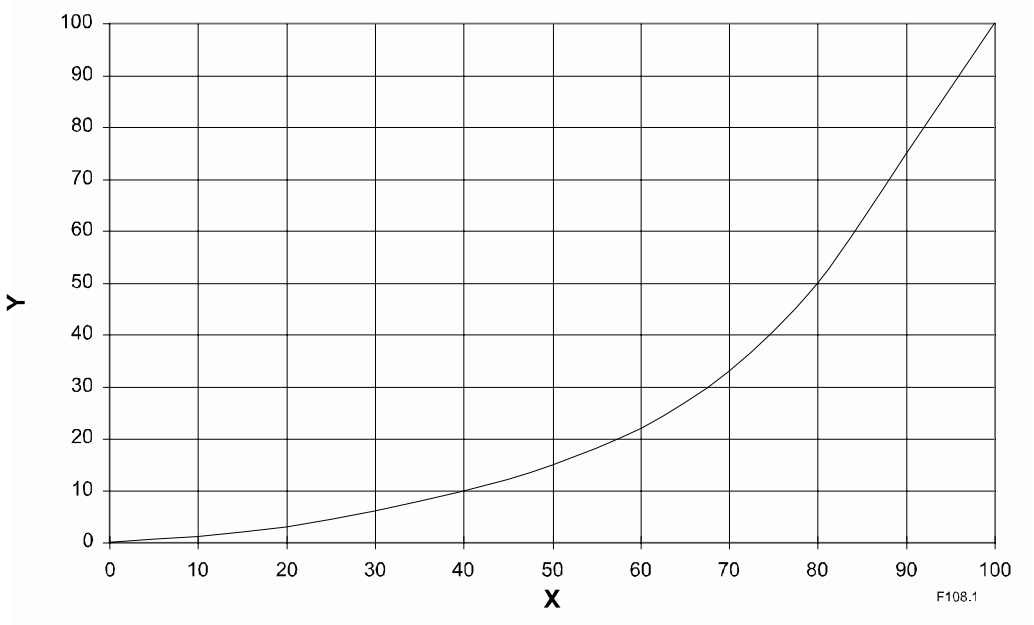

X *Open angle (%)*

Y *Flow factor kv, cv (%)*

kv 100 Values for Ball Valve Type 546

The k_v values for each intermediate valve position can be determined using the flow value characteristic and the k_v 100 values.

DN mm	DN inch	d mm	k_v 100 l/min (Δp = 1 bar)	C_v 100 US gal. / min (Δp = 1 psi)	k_v 100 m^3/h (Δp = 1 bar)
10	3/8	16	70	4.9	4.2
15	1/2	20	185	12.9	11.1
20	3/4	25	350	24.5	21
25	1	32	700	49.0	42
32	1¼	40	1000	70.0	60
40	1½	50	1600	112.0	96
50	2	63	3100	217.1	186

Tightening torque values for bolts type 546

Flanged joints with flange gaskets or flat gaskets

d mm	DN mm	DN Zoll	Total number of screws (for 2 flanged joints) standard nut (height 0.8 x d) [1]	Torque (average values) Flange gasket [2]		Torque (average values) Flat gasket	
				in Nm	in In lbf	in Nm	in In lbf
20	15	½	8 x M12 x 50	15	133	15	133
25	20	¾	8 x M12 x 55	15	133	15	133
32	25	1	8 x M12 x 60	15	133	15	133
40	32	1¼	8 x M16 x 70	15	133	20	177
50	40	1½	8 x M16 x 70	15	133	30	266
63	50	2	8 x M16 x 80	20	177	35	310

1) for valve ends Type 546 in PP-H in combination with backing flanges, use half of the standard nut height
2) preferred (plastics-oriented) gasket type

Attention: For more information on the use of the different gasket types, see Chapter: Jointing Technology => Separable Connections

Technical Features of the Ball Valve Type 546

a) Valve ends parts for the Type 546 are available as:
- Solvent cement/fusion socket (short installation length)
- Solvent cement/fusion spigot (for standard installation length)
- Threaded socket (on request with stainless steel outer reinforcement ring)
- Butt fusion spigot
- electrofusion spigot
- Fixed flange (for standard installation length)
- Backing flange (for standard installation length)
- Solvent cement and threaded connections for other standards.

b) Newly designed valve nuts with buttress thread. These enable fast and safe radial mounting and dismounting of the valve during installation or maintenance work, without tools.
Attention: Only hand tighten valve nuts.

c) Union bush with fine buttress thread makes it easier to adjust the operating torque. **Attention:** Please observe the operating torque guidelines!

d) Ball with fully circular cross-section for optimal flow characteristics. The system with the floating ball permits a tight seal.

e) Two spigot seals with o-rings guarantee a long service life and high reliability.

f) The stem features a predetermined breaking point, which is located outside of the housing. In case of damage, the medium cannot therefore leak to the outside along the spigot.

g) Sturdy ball seals made of pure PTFE demonstrate high abrasion resistance, good sliding properties, chemical resistance (see the special list of "Chemical Resistance") and a long working life.

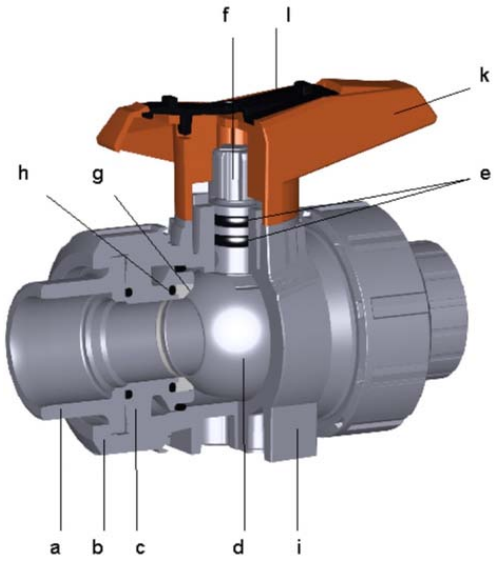

h) The backing seal effectuates continuous readjustment of the ball seal and this means that under normal working conditions maintenance-free operation and a constant torque can be warranted.

The special geometry of the o-ring chamber prevents the o-rings from being flushed out.

i) Compact housing, designed especially for plastics, with short installation length. The basic model has pick-up points for threaded inserts so that they can be attached directly on the valve. A multifunctional module with limit switches, which simultaneously serves as an interface for adding actuators, can be mounted quickly and simply on the valve body.

k) Ergonomic polypropylene handle with double stops and coding for clear positioning on the stem. Multifunctional handle, lockable and with grid positioning at 0° and 90°, available as an option.

l) Integrated handle clip of reinforced polypropylene with two cams, enabling the handle to be used as a tool for assembly and disassembly of the union bush (Attention: The union bush has left-handed thread)

TAG:20-HV-320-1/2/3/4

Polypropylene Ball Valves

For proven leak-free performance, specify **Polypropylene Ball Valves**. Their corrosion-resistant, all-plastic design makes them ideal for water filtration units, coffee and beverage machines and a wide variety of other fluid applications. Polypropylene material meets all FDA and NSF-51 requirements for food contact.

Features/Benefits:

- Precision molded, all-plastic design is leak free and corrosion resistant.
- Polypropylene material offers a wider chemical acceptance range, as well as a wide temperature range.
- Bi-directional flow maximizes productivity.
- Full flow design reduces pressure drop across the valve.
- Special o-ring seal ensures a reliable leak-tight connection.
- TrueSeal™ connection reduces potential leaks.

Specifications:

- Temperature range: 0°F to 225°F (-18°C to 107°C).
- O-ring seal material: Nitrile.
- NSF-51 listed.
- Pressure rated to 150 PSI with a 600 PSI burst pressure. Actual working pressures with be lower at elevated temperatures

Advantages:

- Reduce costs—Built-in TrueSeal™ connection eliminates the need for a secondary fitting.
- Save space—Low-profile design allows for easy assembly and access where space is at a premium.

D

Assembly Instructions:

1. Inspect the mating threads for debris or damage. Remove any old fluoropolymer tape or sealant on previously used threads. If threads are damaged, replace with new adapter before proceeding.
2. Apply 2 to 3 wraps of fluoropolymer tape, Parker TrueSealant™ or an NSF/FDA approved silicon sealant. Do not user Plumbers Putty or Pipe Dope. These chemically react with plastic materials and could cause a failure.
3. Align ball valve to mating thread to ensure cross threading does not occur.
4. Screw ball valve onto mating thread 3 to 5 turns. This should be sufficient to properly seal the threads.
5. Pressurize system and check for leaks.

VME - Valve Male Elbow



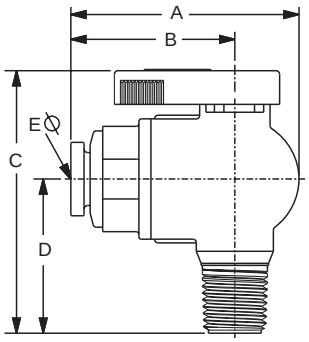

PART NUMBER	NOM. TUBE O.D.	NPTF THREAD SIZE	A	B	C	D	ØE THRU HOLE MIN.
PP4VME2-MG (+)	1/4	1/8	1.74	1.21	2.00	1.10	.19
PP4VME4-MG	1/4	1/4	1.74	1.21	2.18	1.28	.19
PP4VME6-MG	1/4	3/8	1.74	1.21	2.18	1.28	.19
PP4VME8-MG (+)	1/4	1/2	1.74	1.21	2.37	1.47	.19
PP6VME2-MG (+)	3/8	1/8	1.85	1.32	2.00	1.10	.25
PP6VME4-MG	3/8	1/4	1.85	1.32	2.18	1.28	.25
PP6VME6-MG	3/8	3/8	1.85	1.32	2.18	1.28	.25
PP6VME8-MG	3/8	1/2	1.85	1.32	2.37	1.47	.25

VFE - Valve Female Elbow



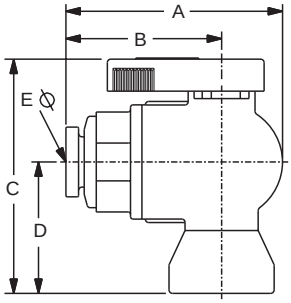

PART NUMBER	NOM. TUBE O.D.	NPTF THREAD SIZE	A	B	C	D	ØE THRU HOLE MIN.
PP4VFE2-MG (+)	1/4	1/8	1.74	1.21	1.82	0.92	.19
PP4VFE4-MG	1/4	1/4	1.74	1.21	2.05	1.15	.19
PP4VFE6-MG	1/4	3/8	1.74	1.21	2.18	1.28	.19
PP6VFE2-MG (+)	3/8	1/8	1.85	1.32	1.82	0.92	.25
PP6VFE4-MG	3/8	1/4	1.85	1.32	2.05	1.15	.25
PP6VFE6-MG	3/8	3/8	1.85	1.32	2.18	1.28	.25

(+) Non Standard.

NOTE: PPL refers to Polypropylene. FCB refers to Fluorocarbon.

Parker Hannifin Corporation
Fluid System Connectors
Otsego, Michigan

D

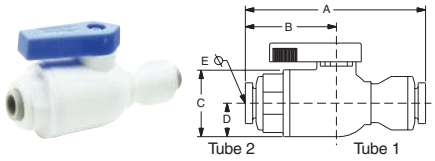

VUC - Valve Union Connector

PART NUMBER	1 TUBE SIZE	2 TUBE SIZE	A	B	C	D	ØE THRU HOLE MIN.
PP4VUC4-MG	1/4	1/4	2.55	1.22	1.0	0.5	.19
PP4VUC6-MG	1/4	3/8	2.55	1.22	1.0	0.5	.19
PP6VUC4-MG	3/8	1/4	2.57	1.30	1.0	0.5	.19
PP6VUC6-MG	3/8	3/8	2.67	1.32	1.4	0.5	.25

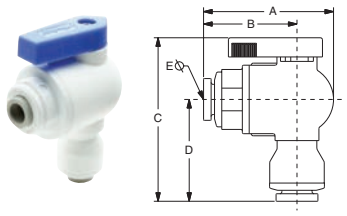

VEU - Valve Elbow Union

PART NUMBER	1 TUBE SIZE	2 TUBE SIZE	A	B	C	D	ØE THRU HOLE MIN.
PP4VEU4-MG	1/4	1/4	1.75	1.22	2.33	1.42	.19
PP4VEU6-MG	1/4	3/8	1.75	1.22	2.33	1.42	.11
PP6VEU4-MG	3/8	1/4	1.83	1.30	2.32	1.40	.19
PP6VEU6-MG	3/8	3/8	1.85	1.32	2.34	1.44	.25

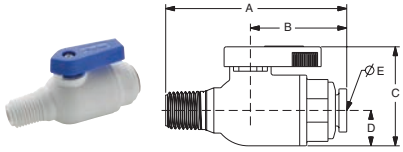

VMC - Valve Male Connector

PART NUMBER	NOM. TUBE O.D.	NPTF THREAD SIZE	A	B	C	D	ØE THRU HOLE MIN.
PP4VMC2-MG (+)	1/4	1/8	2.22	1.21	1.4	0.5	.19
PP4VMC4-MG	1/4	1/4	2.40	1.21	1.4	0.5	.19
PP4VMC6-MG	1/4	3/8	2.40	1.21	1.4	0.5	.19
PP4VMC8-MG (+)	1/4	1/2	2.59	1.21	1.4	0.5	.19
PP6VMC2-MG (+)	3/8	1/8	2.33	1.32	1.4	0.5	.25
PP6VMC4-MG	3/8	1/4	2.51	1.32	1.4	0.5	.25
PP6VMC6-MG	3/8	3/8	2.51	1.32	1.4	0.5	.25
PP6VMC8-MG (+)	3/8	1/2	2.70	1.32	1.4	0.5	.25

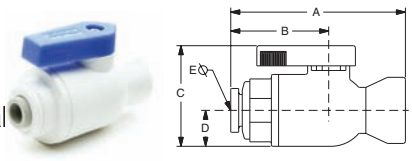

VFC - Valve Femal Connector

PART NUMBER	NOM. TUBE O.D.	NPTF THREAD SIZE	A	B	C	D	ØE THRU HOLE MIN.
PP4VFC2-MG	1/4	1/8	2.04	1.21	1.4	0.5	.19
PP4VFC4-MG	1/4	1/4	2.27	1.21	1.4	0.5	.19
PP4VFC6-MG	1/4	3/8	2.40	1.21	1.4	0.5	.19
PP6VFC2-MG	3/8	1/8	2.15	1.32	1.4	0.5	.25
PP6VFC4-MG	3/8	1/4	2.38	1.32	1.4	0.5	.25
PP6VFC6-MG	3/8	3/8	2.51	1.32	1.4	0.5	.25

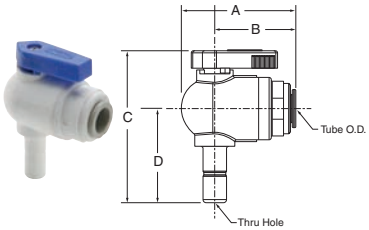

VTEU - Valve Tube Elbow Union

PART NUMBER	NOM. TUBE O.D.	STEM	A	B	C	D	ØE THRU HOLE MIN.
PP4VTEU6-MG	1/4	3/8	1.75	1.22	2.43	1.50	.17
PP6VTEU6-MG	3/8	3/8	1.83	1.30	2.43	1.50	.25

NOTE: PPL refers to Polypropylene. FCB refers to Fluorocarbon.

Parker Hannifin Corporation
Fluid System Connectors
Otsego, Michigan

Cold Water Supply Valve

(Patent No. 6,213,149)

Parker's water supply valve is intended for use with Point Of Use water appliances requiring a cold water supply such as POU faucets, instant hot water faucets, reverse osmosis systems and water filtration systems. The Parker TrueSeal™ Cold Water Supply Valve is designed for temporary cold water shut-off to a POU appliance to change filters, tanks or when servicing the appliance — all while maintaining full water flow to the sink or water basin above. When the POU system is removed from service, the Parker TrueSeal™ Cold Water Supply Valve is to be removed also.

TrueSeal™ Cold Water Supply Valves are for cold water service at temperatures above freezing to 125°F ambient. Not for use in hot water service applications.

Features/Benefits:

- Fast, easy installation.
- No pierced lines or saddle hookups.
- Optimum flow to the faucet - full flow porting.
- No need to pierce the supply line.
- Connects 3/8" OD tubing directly to valve.
- 1/2" NPT connections available.
- Excellent resistance to chlorine and other chemicals.
- Integrated handle for easy on/off operation.
- Visual indicator shows open/closed position.

Specifications:

- NSF Standard 51 listed.
- Pressure rating: 150 PSI with a 600 PSI burst pressure.
- Design factor: 4:1
- O-ring seal material: EPDM.
- Meets the pressure integrity test of NSF-53 and NSF-58.

Applications:

- Reverse osmosis systems.
- Under sink filtration systems.
- POU faucets.
- Water supply valves are intended for cold water service at temperatures from above freezing to 125°F ambient.
- NOT for use in hot water service applications.

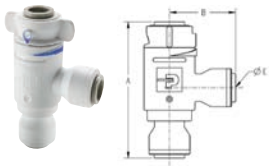

VTU - Water Supply Valve

WHITE POLYPROPYLENE	NOM. TUBE O.D.	A	B	D THRU HOLE MIN.
PP6VTU6-MG	3/8	2.92	1.3	.30

(+) Non Standard.

NOTE: PPL refers to Polypropylene. FCB refers to Fluorocarbon.

TrueSeal™ Cold Water Supply Valve Assembly Instructions

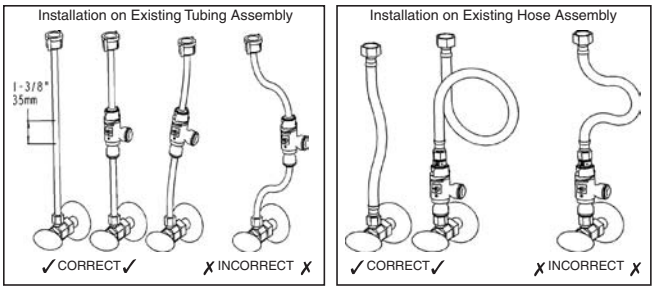

For Installation with 3/8" Plastic Tubing:

1. Shut off water at the chrome or brass valve.
2. Disconnect existing tube assembly.
3. Cut out a 1-3/8" (35 mm) section near the center of the existing tubing. Cut the tube squarely and remove any burrs.
4. Place an insertion depth mark 3/4" (19 mm) from the end of each cut on the tubing to be reused. Refer to "TrueSeal Assembly Instructions," Steps 2 and 3, for tubing assembly (reverse side).
5. Reconnect tube assembly with new valve.
6. Make sure new valve is closed before opening water valve. Open valve in Step 1 and check for leaks.
7. Insert 3/8" tubing from water appliance into side port.
8. Open new valve by turning pointer to large end of flow indicator.

For Installation with Flexible Hose:

1. Shut off water at the chrome or brass valve.
2. Disconnect one end of existing hose assembly.
3. Place the appropriate adapters on the chrome or brass valve and the hose end.
4. Tighten adapter on chrome or brass valve finger tight plus 1/2 turn. Do not over tighten.
5. Push tube portion of adapters into top and bottom of valve until bottomed out. Hose should not be kinked. A longer hose assembly might be required if a gently loop cannot be made.
6. Make sure new valve is closed before opening water valve. Pointer will be at the small end of triangle flow indicator. Open valve in Step 1 and check for leaks.
7. Insert 3/8" tubing form water appliance into side port.
8. Open new valve by turning pointer to large end of flow indicator.



Water Supply Valve Kits

PART NO.	CONNECTS TO:	KIT CONTAINS
WSV4-KIT	1/4" COMPRESSION VALVE	AW6TAF7-MG, AW6TFA7-MG, PP6VTU6-MG
WSV6-KIT	3/8" COMPRESSION VALVE	AW6TAF9-MG, AW6TFA9-MG, PP6VTU6-MG
WSV8-KIT	1/2" NPSM FAUCET STEM	AW6TAF8-MG, AW6TFA8-MG, PP6VTU6-MG

Parker Hannifin Corporation
Fluid System Connectors
Otsego, Michigan

D

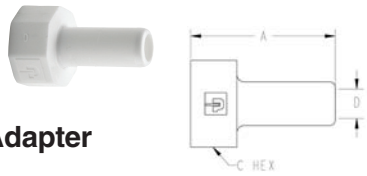

TFA - Tube Faucet Adapter

(Female Thread)

WHITE ACETAL	TUBE STEM O.D.	THREAD SIZE	A	C HEX	D MIN.
AW6TFA7-MG	3/8	7/16-24	1.25	.69	.17
AW6TFA8-MG	3/8	1/2-14 NPSM	1.45	1.06	.22
AW6TFA9-MG	3/8	9/16-24	1.25	.75	.22

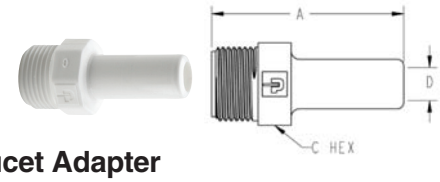

TAF - Tube Faucet Adapter

(Male Thread)

WHITE ACETAL	TUBE STEM O.D.	THREAD SIZE	A	C HEX	D MIN.
AW6TAF7-MG	3/8	7/16-24	1.41	.50	.22
AW6TAF8-MG	3/8	1/2-14 NPSM	1.65	.88	.22
AW6TAF9-MG	3/8	9/16-24	1.45	.63	.22



SC - Safety Clip

(Patent No. 6,065,779)

PART NUMBER	PART NUMBER	FOR NOMINAL TUBE O.D.
SC-4	SC-4-B	1/4
SC-5	SC-5-B	5/16
SC-6	SC-6-B	3/8
SC-8	SC-8-B	1/2



TS - Tube Supports

NYLON PART NUMBER	POLYPROPYLENE PART NUMBER
N4TS3	P4TS3
N5TS3	P5TS3
N6TS4	P6TS4
N8TS6	P8TS6

To be used with soft durometer tubing.

AQRT - Quick Release Tool



Makes disconnection of tube adapters and tubing a breeze.

NOTE: PPL refers to Polypropylene. FCB refers to Fluorocarbon.

Parker Hannifin Corporation
Fluid System Connectors
Otsego, Michigan

TAG:
20-HV-302-1/2/3/4
20-HV-301-1/2/3/4
20-HV-602
20-HV-503-1/2/3/4
20-HV-504-1/2/3/4
20-HV-506-1/2/3/4
20-HV-505-1/2/3/4
90-HV-002-A/B
90-HV-003-A/B
90-HV-005
90-HV-006
20-HV-321-1/2/3/4
20-HV-305-1/2/3/4
20-HV-600

D

Valves



PINACLE
STAINLESS STEEL INC.

INDEX

VALVES

SPECIFICATION D1

1 PC Reduced Port *800 WOG Ball Valve, Threaded* ***D2***

2 PC Full Port *1000 WOG Ball Valve, Threaded* ***D4***

2 PC Full Port *2000/1500 WOG Ball Valve, Threaded* ***D6***

3 PC Full Port *1000 WOG Ball Valve, Buttweld* ***D8***

3 PC Full Port *1000 WOG Ball Valve, Threaded* ***D10***

3 PC Full Port *1000 WOG Ball Valve, Socketweld* ***D12***

1 PC Class 150 Regular Port *Ball Valve, Flanged* ***D14***

2 PC Class 150 Full Port *Ball Valve Flanged* ***D16***

2 PC Class 300 Full Port *Ball Valve Flanged* ***D18***

2 PC Class 150 Full Port "FS" *Ball Valve, Flanged* ***D20***

Full Port *200 WOG Swing Check Valve, Threaded* ***D22***

800 WOG *Y-Check Valve ,Threaded, Socketweld* ***D24***

Full Port *200 WOG Globe Valve, Threaded* ***D26***

Full Port *200 WOG Gate Valve, Threaded* ***D28***

3 Way Reduced Port *1000 WOG Ball Valve, Threaded "L" Port* ***D30***

3 Way Reduced Port *1000 WOG Ball Valve, Threaded "T" Port* ***D32***

INDEX (cont'd)

800 WOG *Y Strainer Valve, Threaded, Socketweld*..... ***D34***

6000 PSI Stainless Steel *Needle Valve*..... ***D36***

Class 150 Flange End *Swing Check Valve* ***D38***

Class 150 Flange End *Gate Valve*..... ***D40***

Class 150 Flange End *Globe Valve*..... ***D42***

FLOW PATTERNS D44

TUBE VALVES - SEE OUR SECTION "F"



VALVES

THREADED / SOCKETWELD / FLANGED / BUTTWELD

- BALL / GATE / GLOBE / CHECK
- NEEDLE
- STRAINER

PINACLE



DESIGN FEATURES

- Pressure rating: 800 PSI WOG (NON-SHOCK)
- Steam rating: 125 PSI WSP
- Investment cast body
- Bottom-loaded, Blow-out-proof stem
- Adjustable stem packing
- Stainless Steel handle with vinyl grip
- Locking device

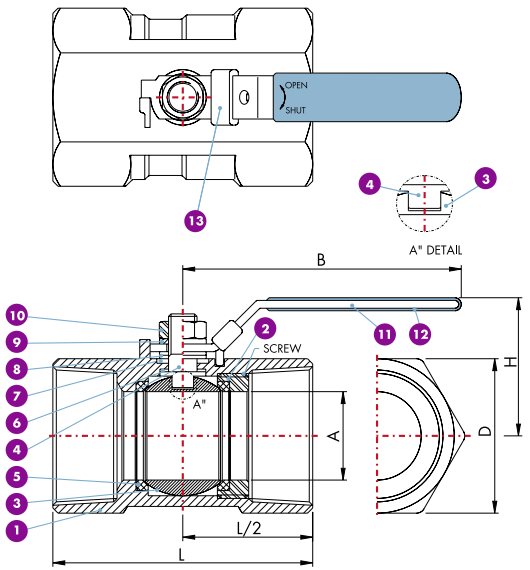

DIMENSIONS

CODES	SIZE		A		B		D		L		H		Cv Factor	Weight lb
	inch	mm	inch	mm	inch	mm	inch	mm	inch	mm	inch	mm		
13TBV1025	1/4"	8	0.20	5.0	2.36	60	0.67	17.0	1.54	39.0	1.22	31	1.0	0.17
13TBV10375	3/8"	10	0.28	7.0	2.76	70	0.83	21.0	1.73	44.0	1.38	35	2.5	0.24
13TBV105	1/2"	15	0.36	9.2	3.39	86	0.98	25.0	2.22	56.0	1.69	43	5.5	0.38
13TBV1075	3/4"	20	0.49	12.5	3.39	86	1.26	32.0	2.32	59.0	1.81	46	10.0	0.55
13TBV11	1"	25	0.63	16.0	4.09	104	1.50	38.0	2.80	71.0	1.97	50	15.5	0.99
13TBV1125	11/4"	32	0.79	20.0	4.09	104	1.93	49.0	3.11	79.0	2.13	54	20.0	1.63
13TBV115	11/2"	40	0.96	24.5	4.96	126	2.09	53.0	3.27	83.0	2.56	65	37.0	1.83
13TBV12	2"	50	1.26	32.0	4.96	126	2.56	65.0	3.94	100.0	2.83	72	60.0	2.76

PRESSURE TEMPERATURE RATINGS (BODY)

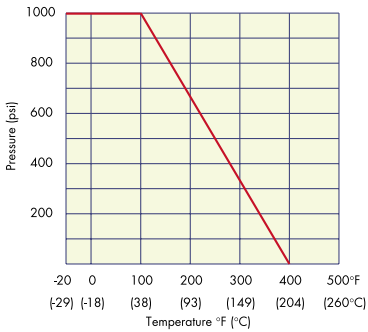

MATERIALS LIST

NO.	PART NAME	MATERIAL	QTY
1	BODY	ASTM A351 Gr. CF8M	1
2	CAP	ASTM A351 Gr. CF8M	1
3	BALL	ASTM A351 Gr. CF8M	1
4	STEM	ASTM A276 Gr. 316	1
5	SEAT	PTFE	2
6	THRUST WASHER	PTFE	1
7	GLAND PACKING	PTFE	1
8	WASHER	SS304	2
9	SPRING WASHER	SS304	1
10	STEM NUT	SS304	1
11	HANDLE	SS304	1
12	HANDLE SLEEVE	VINYL GRIP	1
13	LOCKING PLATE	SS304	1

**** SIZES SHOWN ARE APPROXIMATE AND MAY VARY***



DESIGN FEATURES

- Blow-out-proof stem design
- Steam Rating: 125 PSI WSP
- Temperature range: -50°F to 450°F
- Locking device
- Threaded type:
  ANSI B1.20.1 (NPT)

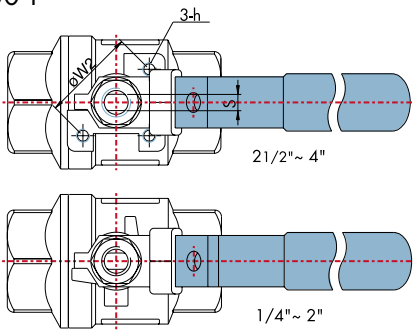

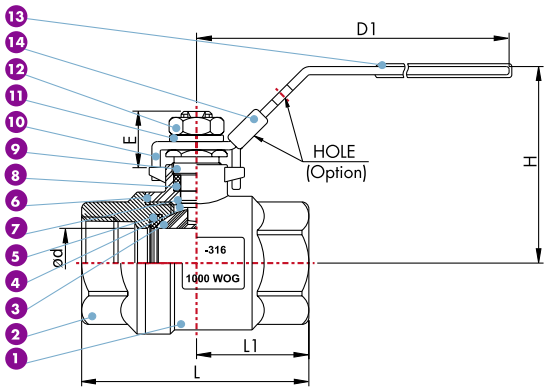

DIMENSIONS

CODES	SIZE		d		E		L		L1		H		S		D1		h	Cv	Weight
	inch	mm	inch	mm	inch	mm	inch	mm	inch	mm	inch	mm	inch	mm	inch	mm	(Option)	Factor	Lb
13TBV2025	1/4"	8	0.43	11.0	0.61	15.5	2.28	57.8	1.13	28.8	2.25	57.2	0.21	5.45	4.06	103		16	0.57
13TBV20375	3/8"	10	0.49	12.5	0.61	15.5	2.28	57.8	1.13	28.8	2.25	57.2	0.21	5.45	4.06	103		16	0.53
13TBV205	1/2"	15	0.59	15.0	0.57	14.5	2.43	61.7	1.21	30.7	2.33	59.1	0.21	5.45	4.06	103		26	0.66
13TBV2075	3/4"	20	0.79	20.0	0.83	21.0	2.76	70.1	1.38	35.0	2.46	62.6	0.21	5.45	4.06	103		55	0.93
13TBV21	1"	25	0.98	25.0	0.77	19.5	3.20	81.3	1.58	40.2	2.78	70.7	0.24	6.20	5.00	127		110	1.53
13TBV2125	11/4"	32	1.26	32.0	1.09	27.9	3.78	96.0	1.86	47.2	3.00	76.2	0.24	6.20	5.00	127		180	2.23
13TBV215	11/2"	40	1.50	38.0	1.50	27.5	4.43	112.5	2.19	55.6	3.51	89.1	0.37	9.40	6.02	153		270	4.10
13TBV22	2"	50	2.00	50.8	1.08	26.7	4.96	126.0	2.46	62.4	3.87	98.2	0.37	9.40	7.60	193		500	6.27
13TBV225	21/2"	65	2.56	65.0	1.02	26.0	6.63	168.5	3.35	85.0	4.35	110.6	0.37	9.40	7.60	193	M8xP1.25	800	13.77
13TBV23	3"	80	3.15	80.0	1.50	38.0	7.54	191.4	3.78	95.9	4.88	124.0	0.47	12.00	10.98	279	M10xP1.5	1150	22.03
13TBV24	4"	100	3.94	100.0	1.89	48.0	8.52	216.5	4.26	108.3	6.63	168.5	0.47	16.00	13.19	335	M10xP1.5	2120	37.89

PRESSURE TEMPERATURE RATINGS
(PTFE SEATS)

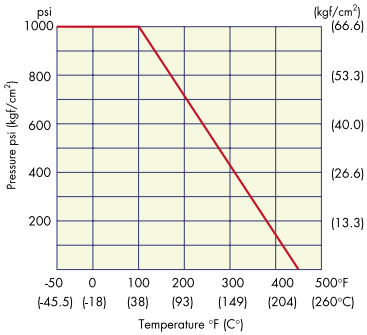

MATERIALS LIST

NO.	PART NAME	MATERIAL	QTY
1	BODY	ASTM A351 Gr. CF8M	1
2	CAP	ASTM A351 Gr. CF8M	1
3	BALL	ASTM A351 Gr. CF8M	1
4	STEM	ASTM A276 Gr. 316	1
5	SEAT	PTFE+15% G/F	2
6	GASKET	PTFE	1
7	THRUST WASHER	PTFE	1
8	PACKING	PTFE	1
9	GLAND	SS304	1
10	HANDLE	SS304	1
11	SPRING WASHER	SS304	1
12	HANDLE NUT	SS304	1
13	HANDLE SLEEVE	VINYL GRIP	1
14	LOCKING PLATE*	SS304	1

* OPTION

SIZES SHOWN ARE APPROXIMATE AND MAY VARY



DESIGN FEATURES

- Working pressure: 1/4"~1" 2000 PSI
  11/4"~2" 1500 PSI
- Steam Rating: 150 PSI WSP
- Investment casting body & cap
- ME-PTFE Seal Kits: Replaces PTFE, RPTFE and FPA
  Low deformation under load
  Low permeation
- Temperature rating:
  -45.5°C (-50°F) to
  246°C (475°F)
- Long cycle life
- Adjustable stem packing
- Blow-out proof stem
- Locking device
- Design specification:
  ANSI B16.34
  CLASS 900
- Test standard: API 598
- Option:
  Seal weld cap to body

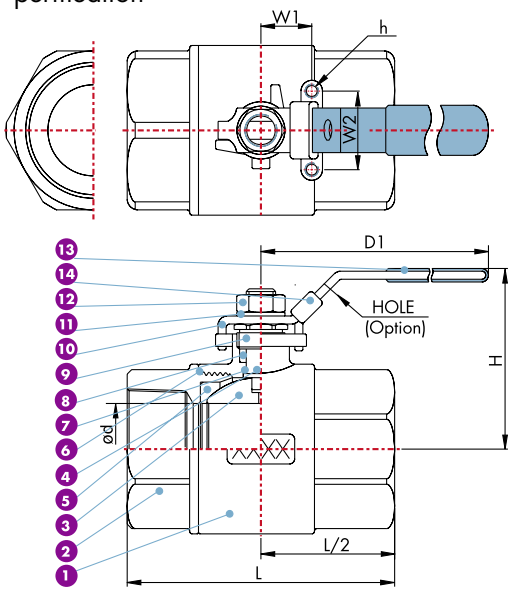

DIMENSIONS

CODES	SIZE		d		L		H	D1		W1		W2		h	Cv Factor	Weight Lb
	inch	mm	inch	mm	inch	mm	inch	inch	mm	inch	mm	inch	mm	(Option)		
13TBVMM025	1/4"	8	0.43	11.0	2.34	59.5	2.24	4.06	103	0.50	12.7	1.12	28.5	M5 x P0.8	16	0.81
13TBVMM0375	3/8"	10	0.49	12.5	2.34	59.5	2.24	4.06	103	0.50	12.7	1.12	28.5	M5 x P0.8	16	0.79
13TBVMM05	1/2"	15	0.59	15.0	2.52	64.5	2.27	4.06	103	0.50	12.7	1.12	28.5	M5 x P0.8	26	0.93
13TBVMM075	3/4"	20	0.79	20.0	3.03	77.0	2.70	5.00	127	0.88	22.4	1.38	35.0	M6 x P1.0	55	1.76
13TBVMM1	1"	25	0.98	25.0	3.56	90.5	2.86	5.00	127	0.88	22.4	1.38	35.0	M6 x P1.0	110	2.73
13TBVMM125	11/4"	32	1.26	32.0	3.92	99.5	3.45	6.14	156	1.00	25.4	1.50	38.1	M6 x P1.0	180	4.52
13TBVMM15	11/2"	40	1.50	38.0	4.65	118.0	3.66	7.60	193	1.00	25.4	1.50	38.1	M6 x P1.0	270	5.68
13TBVMM2	2"	50	2.00	50.8	5.37	136.5	4.11	7.60	193	1.00	25.4	1.50	38.1	M6 x P1.0	500	9.76

PRESSURE TEMPERATURE RATINGS (ME-PTFE SEATS)

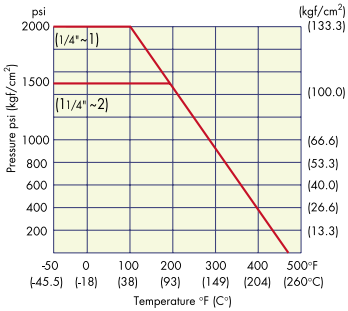

MATERIALS LIST

NO.	PART NAME	MATERIAL	QTY
1	BODY	ASTM A351 Gr. CF8M	1
2	CAP	ASTM A351 Gr. CF8M	1
3	BALL	ASTM A351 Gr. CF8M	1
4	STEM	ASTM A276 Gr. 316	1
5	SEAT	ME-PTFE*	2
6	GASKET	ME-PTFE*	1
7	THRUST WASHER	ME-PTFE*	1
8	PACKING	ME-PTFE*	1
9	GLAND	SS304	1
10	HANDLE	SS304	1
11	SPRING WASHER	SS304	1
12	HANDLE NUT	SS304	1
13	HANDLE SLEEVE	VINYL GRIP	1
14	LOCKING PLATE	SS304	1

*ME-PTFE IS MOLECULARLY ENHANCED PTFE

SIZES SHOWN ARE APPROXIMATE AND MAY VARY

PINACLE



DESIGN FEATURES

- Pressure rating: 1000 PSI WOG (NON-SHOCK)
- Steam Rating: 150 PSI WSP
- Investment cast body & cap
- Anti-static blow-out-proof stem
- Adjustable stem packing
- Stainless Steel handle with vinyl grip

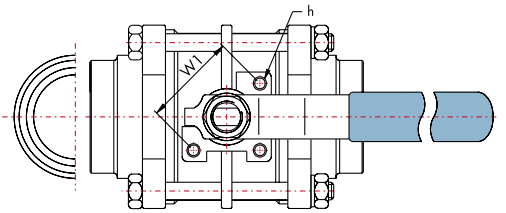

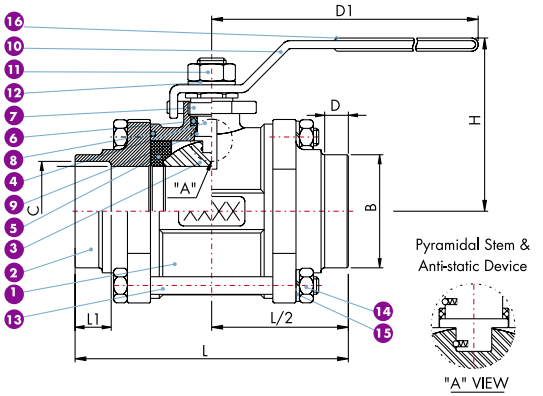

DIMENSIONS

SIZE		B		C		D		L		L1		H	D1		W1		h	Cv Factor	Weight Lb
inch	mm	inch	mm	inch	mm	inch	mm	inch	mm	inch	mm	inch	inch	mm	inch	mm			
1/4"	8							2.56	65			4.02	4.02	102	1.42	36	M5 x P0.8	6	1.06
3/8"	10							2.56	65			4.02	4.02	102	1.42	36	M5 x P0.8	12	1.01
1/2"	15	0.67	17.0	0.55	14.0	0.24	6.0	2.80	71	0.35	9.0	4.02	4.02	102	1.42	36	M5 x P0.8	19	1.28
3/4"	20	0.94	24.0	0.83	21.0	0.24	6.0	3.35	85	0.35	9.0	4.96	4.96	126	1.42	36	M5 x P0.8	37	2.02
1"	25	1.18	30.0	1.06	27.0	0.28	7.0	3.74	95	0.41	10.5	4.96	4.96	126	1.42	36	M5 x P0.8	64	2.62
11/4"	32	1.46	37.0	1.34	34.0	0.28	7.0	4.41	112	0.41	10.5	5.91	5.91	150	1.97	50	M6 x P1.0	103	4.57
11/2"	40	1.73	44.0	1.61	41.0	0.31	8.0	4.84	123	0.47	12.0	5.91	5.91	150	1.97	50	M6 x P1.0	143	6.06
2"	50	2.20	56.0	2.09	53.0	0.31	8.0	5.55	141	0.47	12.0	7.32	7.32	186	1.97	50	M6 x P1.0	360	8.98
21/2"	65	3.00	76.1	2.84	72.1	0.31	8.0	6.81	173	0.47	12.0	10.71	10.71	272	2.76	70	M8 x P1.25	440	17.9
3"	80	3.50	89.0	3.35	85.0	0.31	8.0	7.56	192	0.47	12.0	10.71	10.71	272	4.02	102	M10 x P1.5	520	28.03
4"	100	4.25	108.0	4.09	104.0	0.31	8.0	8.86	225	0.47	12.0	13.19	13.19	335	4.02	102	M10 x P1.5	820	46.57

PRESSURE TEMPERATURE RATINGS (BODY)

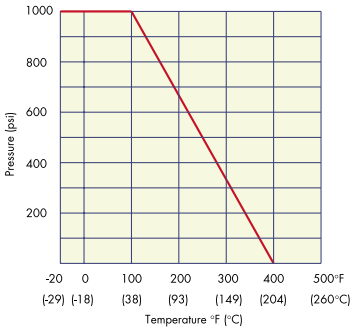

MATERIALS LIST

NO.	PART NAME	MATERIAL	QTY
1	BODY	ASTM A351 Gr. CF8M	1
2	CAP	ASTM A351 Gr. CF8M	2
3	BALL	ASTM A351 Gr. CF8M	1
4	STEM	ASTM A276 Gr. 316	1
5	SEAT	PTFE	2
6	PACKING	GRAFOIL	1
7	GLAND	SS304	1
8	GASKET	GRAFOIL	2
9	THRUST WASHER	PTFE	1
10	HANDLE	SS304	1
11	HANDLE NUT	SS304	1
12	SPRING WASHER	SS304	1
13	BOLTS	ASTM A193 Gr. B8	4-6
14	BOLT NUTS	ASTM A194 Gr. 8	4-6
15	BOLT WASHERS	SS304	4-6
16	HANDLE SLEEVE	VINYL GRIP	1

**** SIZES SHOWN ARE APPROXIMATE AND MAY VARY***

PINACLE



DESIGN FEATURES

- Pressure rating: 1000 PSI WOG (NON-SHOCK)
- Steam Rating: 150 PSI WSP
- Investment cast body & cap
- Blow-out-proof stem
- Adjustable stem packing
- Stainless Steel handle with vinyl grip
- Locking device

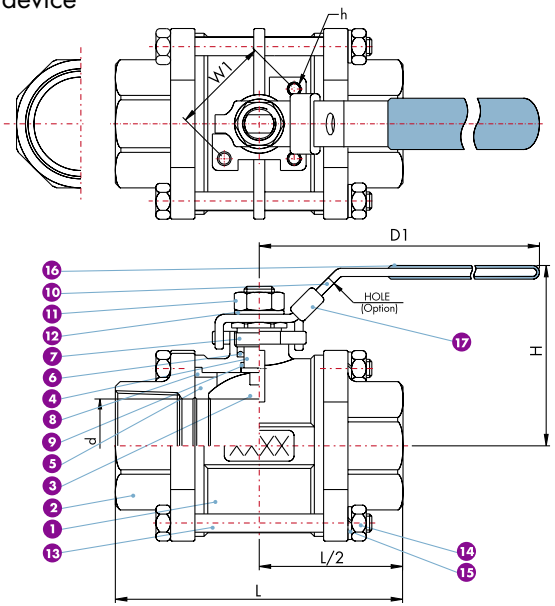

DIMENSIONS

CODES	SIZE		d		L		D1		H		W1		h	Cv Factor	Weight Lb
	inch	mm	inch	mm	inch	mm	inch	mm	inch	mm	inch	mm			
13TBV3025	1/4"	8	0.43	11.0	2.56	65	4.02	102	4.02	54	1.42	36	M5 x P0.8	6	1.06
13TBV30375	3/8"	10	0.49	12.5	2.56	65	4.02	102	4.02	54	1.42	36	M5 x P0.8	12	1.01
13TBV305	1/2"	15	0.59	15.0	2.80	71	4.02	102	4.02	55	1.42	36	M5 x P0.8	19	1.28
13TBV3075	3/4"	20	0.79	20.0	3.35	85	4.96	126	4.96	65	1.42	36	M5 x P0.8	37	2.02
13TBV31	1"	25	1.00	25.4	3.74	95	4.96	126	4.96	71	1.42	36	M5 x P0.8	64	2.62
13TBV3125	11/4"	32	1.26	32.0	4.37	111	5.91	150	5.91	89	1.97	50	M6 x P1.0	103	4.57
13TBV315	11/2"	40	1.57	40.0	4.76	121	5.91	150	5.91	94	1.97	50	M6 x P1.0	143	6.06
13TBV32	2"	50	2.00	50.8	5.51	140	7.32	186	7.32	100	1.97	50	M6 x P1.0	360	8.98
13TBV325	21/2"	65	2.56	65.0	6.81	173	10.71	272	10.71	121	2.76	70	M8 x P1.25	440	17.9
13TBV33	3"	80	3.15	80.0	7.56	192	10.71	272	10.71	134	4.02	102	M10 x P1.5	520	28.03
13TBV34	4"	100	3.94	100.0	8.86	225	13.19	335	13.19	172	4.02	102	M10 x P1.5	820	46.57

PRESSURE TEMPERATURE RATINGS (BODY)

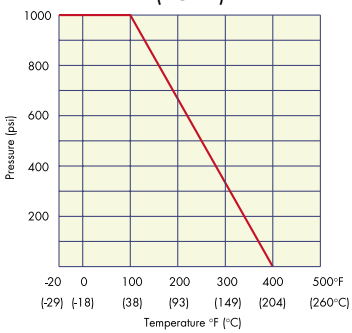

MATERIALS LIST

NO.	PART NAME	MATERIAL	QTY
1	BODY	ASTM A351 Gr. CF8M	1
2	CAP	ASTM A351 Gr. CF8M	2
3	BALL	ASTM A351 Gr. CF8M	1
4	STEM	ASTM A276 Gr. 316	1
5	SEAT	PTFE+15% G/F	2
6	PACKING	PTFE	1
7	GLAND	SS304	1
8	END SEALS	PTFE	2
9	THRUST WASHER	PTFE	1
10	HANDLE	SS304	1
11	HANDLE NUT	SS304	1
12	SPRING WASHER	SS304	1
13	BOLTS	ASTM A193 Gr. B8	4-6
14	BOLT NUTS	ASTM A194 Gr. 8	4-6
15	BOLT WASHERS	SS304	4-6
16	HANDLE SLEEVE	VINYL GRIP	1
17	LOCKING PLATE*	SS304	1

*OPTION

**** SIZES SHOWN ARE APPROXIMATE AND MAY VARY***

PINACLE



DESIGN FEATURES

- Pressure rating: 1000 PSI WOG (NON-SHOCK)
- Steam Rating: 150 PSI WSP
- Investment cast body & cap
- Blow-out-proof stem
- Adjustable stem packing
- Stainless Steel handle with vinyl grip
- Locking device

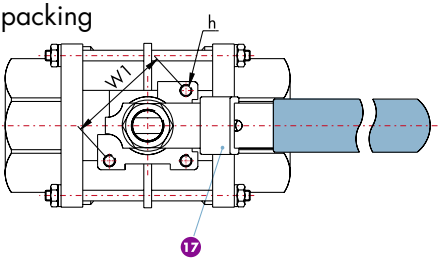

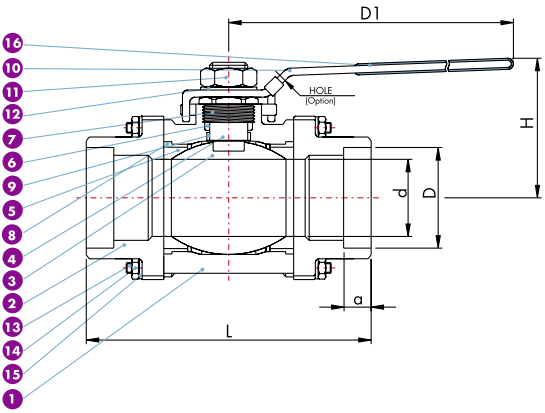

DIMENSIONS

CODES	SIZE		a		d		D		D1	H	L		W1	h	Cv Factor	Weight Lb
	inch	mm	inch	mm	inch	mm	inch	mm	inch	inch	inch	mm	inch			
13WBV3025	1/4"	8	0.39	10	0.43	11.0	0.56	14.1	4.02	2.13	2.56	65	1.42	M5 x P0.8	6	1.06
13WBV30375	3/8"	10	0.39	10	0.49	12.5	0.69	17.5	4.02	2.13	2.56	65	1.42	M5 x P0.8	12	1.01
13WBV305	1/2"	15	0.39	10	0.59	15.0	0.85	21.7	4.02	2.24	2.80	71	1.42	M5 x P0.8	19	1.28
13WBV3075	3/4"	20	0.51	13	0.79	20.0	1.07	27.1	4.96	2.64	3.35	85	1.42	M5 x P0.8	37	2.02
13WBV31	1"	25	0.51	13	1.00	25.4	1.33	33.8	5.00	2.76	3.74	95	1.42	M5 x P0.8	64	2.62
13WBV3125	11/4"	32	0.51	13	1.26	32.0	1.67	42.5	6.14	3.59	4.41	111	1.97	M6 x P1.0	103	4.57
13WBV315	11/2"	40	0.51	13	1.57	40.0	1.91	48.6	6.14	3.74	4.84	121	1.97	M6 x P1.0	143	6.06
13WBV32	2"	50	0.63	16	2.00	50.8	2.41	61.1	7.52	4.02	5.55	141	1.97	M6 x P1.0	360	8.98
13WBV325	21/2"	65	0.63	16	2.56	65.0	2.91	73.8	10.71	4.76	6.81	173	2.76	M8 x P1.25	440	17.9
13WBV33	3"	80	0.63	16	3.15	80.0	3.54	89.8	10.98	5.08	7.56	192	4.02	M10 x P1.5	520	28.03
13WBV34	4"	100	0.75	19	3.94	100.0	4.55	115.5	13.19	6.84	8.86	225	4.02	M10 x P1.5	820	46.57

PRESSURE TEMPERATURE RATINGS (BODY)

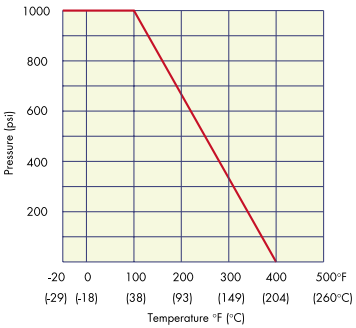

MATERIALS LIST

NO.	PART NAME	MATERIAL	QTY
1	BODY	ASTM A351 Gr. CF8M	1
2	CAP	ASTM A351 Gr. CF8M	2
3	BALL	ASTM A351 Gr. CF8M	1
4	STEM	ASTM A276 Gr. 316	1
5	SEAT	PTFE+15% G/F	2
6	PACKING	PTFE	1
7	GLAND	SS304	1
8	END SEALS	PTFE	2
9	THRUST WASHER	PTFE	1
10	HANDLE	SS304	1
11	HANDLE NUT	SS304	1
12	SPRING WASHER	SS304	1
13	BOLTS	ASTM A193 Gr. B8	4-6
14	BOLT NUTS	ASTM A194 Gr. 8	4-6
15	BOLT WASHER	SS304	4-6
16	HANDLE SLEEVE	VINYL GRIP	1
17	LOCKING PLATE	SS304	1

*OPTION

**** SIZES SHOWN ARE APPROXIMATE AND MAY VARY***



DESIGN FEATURES

- 1 PC 150# Regular Port
- ISO 5211 actuator mounting pad
- Blow-out-proof stem design
- Anti-static device
- Adjustable stem packing
- Locking device
- Body: ASTM A351 Gr.CF8M for TC-6000
- ME-PTFE Seal Kits: Replaces PTFE, RPTFE and FPA
  Low deformation under load
  Low permeation
- Temperature rating: -45.5°C (-50°F) to 246°C (475°F)
- Long cycle life
- ANSI B16.5, B16.10 and B16.34 full compliance
- Test standard: API 598

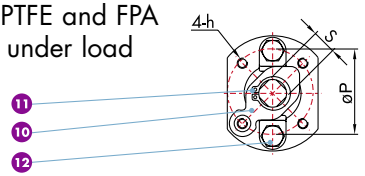

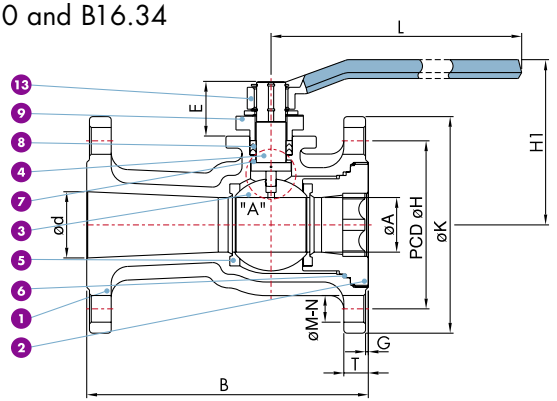



DIMENSIONS

CODES	SIZE		A	B	E	d		G	H	K	T	M	N	P	S	L	H1	h	Cv Factor	Weight Lb
	inch	mm	inch	inch	inch	inch	mm	inch	inch	inch	inch	inch		inch	inch	inch	inch			
13FVAI1	1"	25	0.79	5.0	0.98	0.98	25	0.06	3.12	4.25	0.44	0.62	4	1.65	0.43	5.18	2.95	M5xP0.8	52	5.07
13FVAI1.5	1 1/2"	40	1.26	6.5	1.24	1.57	40	0.06	3.88	5.00	0.56	0.62	4	1.97	0.55	6.42	3.81	M6xP1.0	120	9.92
13FVAI2	2"	50	1.50	7.0	1.65	1.97	50	0.06	4.75	6.00	0.62	0.75	4	2.76	0.67	9.13	4.96	M8xP1.25	170	15.66
13FVAI2.5	2 1/2"	65	1.97	7.5	1.65	2.64	67	0.06	5.50	7.00	0.69	0.75	4	2.76	0.67	9.13	5.32	M8xP1.25	255	24.00
13FVAI3	3"	80	2.56	8.0	2.20	3.15	80	0.06	6.00	7.50	0.75	0.75	4	4.02	0.87	12.87	5.98	M10xP1.5	430	31.31
13FVAI4	4"	100	3.15	9.0	2.20	3.94	100	0.06	7.50	9.00	0.94	0.75	8	4.02	0.87	12.87	6.30	M10xP1.5	565	52.00
13FVAI6	6"	150	3.94	10.5	2.20	5.91	150	0.06	9.50	11.00	1.00	0.88	8	4.02	0.87	12.87	7.01	M10xP1.5	600	78.06

PRESSURE TEMPERATURE RATINGS (ME-PTFE SEATS)

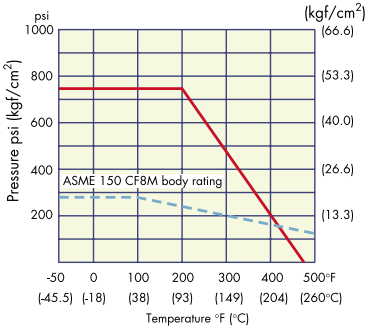

MATERIALS LIST

NO.	PART NAME	MATERIAL	QTY
1	BODY	ASTM A351 Gr. CF8M	1
2	CAP	ASTM A351 Gr. CF8M	1
3	BALL	ASTM A351 Gr. CF8M	1
4	STEM	ASTM A276 Gr. 316	1
5	SEAT	ME-PTFE*	2
6	GASKET	ME-PTFE*	1
7	THRUST WASHER	ME-PTFE*	1
8	PACKING	ME-PTFE*	1
9	GLAND	ASTM A351 Gr. CF8	1
10	STOPPER	SS304	1
11	SNAP RING	SS304	2
12	GLAND BOLT	ASTM A193 Gr. B8	2
13	HANDLE	ASTM A536 Gr. 65, 45 & 12	1

*ME-PTFE IS MOLECULARLY ENHANCED PTFE

SIZES SHOWN ARE APPROXIMATE AND MAY VARY



DESIGN FEATURES

- 2 PC 150# Full Port
- Face to face: ANSI B16.10
- Flange dimension: ANSI B16.5
- Wall thickness: ANSI B16.34
- Test standard: API 598
- Option: Anti-static

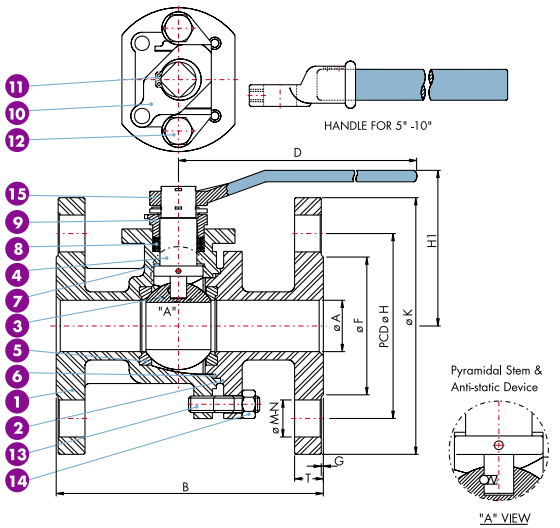

DIMENSIONS

CODES	A		B		F	G	H	K	T	M	N	D	H1	Cv Factor	Weight Lb
	inch	mm	inch	mm	inch	mm	inch	inch	inch	inch	inch	inch		inch	inch		
13FV205	1/2"	15	0.59	15.0	4.25	107.9	1.38	0.06	2.38	3.50	0.44	0.62	4	5.12	2.9	19	4.41
13FV2075	3/4"	20	0.79	20.0	4.62	117.3	1.69	0.06	2.75	3.88	0.44	0.62	4	5.12	3.0	37	5.51
13FV21	1"	25	0.98	25.0	5.00	127.0	2.00	0.06	3.12	4.25	0.44	0.62	4	6.46	3.7	54	6.62
13FV2125	11/4"	32	1.26	32.0	5.50	139.7	2.50	0.06	3.50	4.62	0.50	0.62	4	6.46	3.9	103	9.5
13FV215	11/2"	40	1.50	38.0	6.50	165.1	2.88	0.06	3.88	5.00	0.56	0.62	4	8.07	4.7	143	13.5
13FV22	2"	50	1.97	50.0	7.00	177.8	3.62	0.06	4.75	6.00	0.62	0.75	4	8.07	5.2	360	18.74
13FV225	21/2"	65	2.56	65.0	7.50	190.5	4.12	0.06	5.50	7.00	0.69	0.75	4	8.07	5.3	440	28.67
13FV23	3"	80	3.15	80.0	8.00	203.2	5.00	0.06	6.00	7.50	0.75	0.75	4	12.83	6.1	520	39.69
13FV24	4"	100	3.94	100.0	9.00	228.6	6.19	0.06	7.50	9.00	0.94	0.75	8	12.83	6.9	820	61.74
13FV25	5"	125	4.92	125.0	14.00	355.6	7.31	0.06	8.50	10.00	0.94	0.88	8	42.20	9.4	1500	–
13FV26	6"	150	5.91	150.0	15.50	393.7	8.50	0.06	9.50	11.00	1.00	0.88	8	42.20	9.8	1920	165.38
13FV28	8"	200	7.87	200.0	18.00	457.2	10.62	0.06	11.75	13.50	1.12	0.88	8	42.52	11.7	3600	286.65

PRESSURE TEMPERATURE RATINGS (BODY)

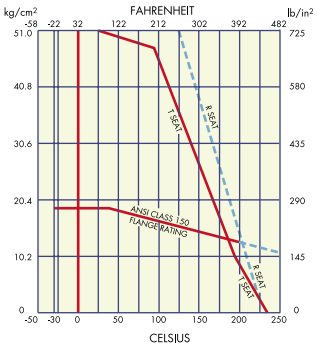

MATERIALS LIST

NO.	PART NAME	MATERIAL	QTY
1	BODY	ASTM A351 Gr. CF8M	1
2	CAP	ASTM A351 Gr. CF8M	1
3	BALL	ASTM A351 Gr. CF8M	1
4	STEM	ASTM A276 Gr. 316	1
5	SEAT	PTFE	2
6	GASKET	PTFE	1
7	THRUST WASHER	PTFE	1
8	PACKING	PTFE	1
9	GLAND	ASTM A351 Gr. CF8	1
10	STOPPER	SS304	1
11	SNAP RING	SS304	2
12	GLAND BOLT	ASTM A193 Gr. B8	2
13	STUD BOLT	ASTM A193 Gr. B8	4-12
14	SET NUT	ASTM A194 Gr. 8M	4-12
15	HANDLE	ASTM A536 Gr. 65, 45 & 12	1

**** SIZES SHOWN ARE APPROXIMATE AND MAY VARY***



DESIGN FEATURES

- 2 PC 300# Full Port
- Face to face: ANSI B16.10
- Flange dimension: ANSI B16.5
- Wall thickness: ANSI B16.34
- Test standard: API 598
- Option: Anti-static

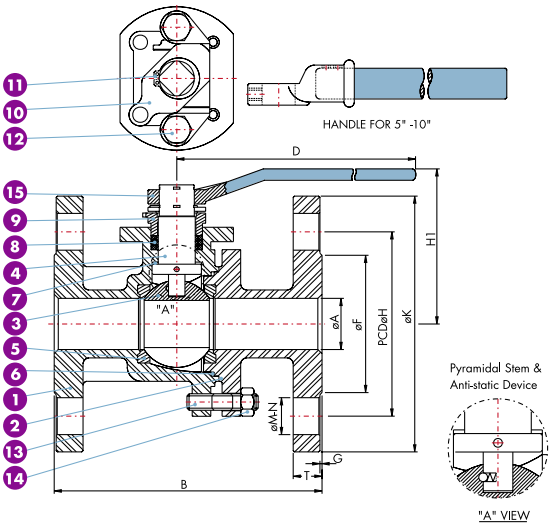

DIMENSIONS

CODES	SIZE		A		B		F	G	H	K	T	M	N	D	H1	Cv Factor	Weight Lb
	inch	mm	inch	mm	inch	mm	inch	inch	inch	inch	inch	inch		inch	inch		
13FVB205	1/2"	15	0.59	15.0	5.50	139.7	1.38	0.06	2.62	3.75	0.56	0.62	4	5.12	2.9	19	5.58
13FVB2075	3/4"	20	0.79	20.0	6.00	152.4	1.69	0.06	3.25	4.62	0.62	0.75	4	5.12	3.0	37	7.72
13FVB21	1"	25	0.98	25.0	6.50	165.1	2.00	0.06	3.50	4.88	0.69	0.75	4	6.46	3.7	54	10.1
13FVB2125	11/4"	32	1.26	32.0	7.00	177.8	2.50	0.06	3.88	5.25	0.75	0.75	4	6.46	3.9	103	13.58
13FVB215	11/2"	40	1.50	38.1	7.50	190.5	2.88	0.06	4.50	6.12	0.81	0.88	4	8.07	4.7	143	20.95
13FVB22	2"	50	1.97	50.0	8.50	215.9	3.62	0.06	5.00	6.50	0.88	0.75	8	8.07	5.2	360	24.92
13FVB225	21/2"	65	2.56	65.0	9.50	241.3	4.12	0.06	5.88	7.50	1.00	0.88	8	8.07	5.3	440	41.45
13FVB23	3"	80	3.15	80.0	11.12	282.4	5.00	0.06	6.62	8.25	1.12	0.88	8	12.83	6.1	520	58.65
13FVB24	4"	100	3.94	100.0	12.00	304.8	6.19	0.06	7.88	10.00	1.25	0.88	8	12.83	6.9	820	91.29
13FVB25	5"	125	4.92	125.0	15.00	381.0	7.31	0.06	9.25	11.00	1.38	0.88	8	42.20	9.4	1500	–
13FVB26	6"	150	5.91	150.0	15.88	403.3	8.50	0.06	10.62	12.50	1.44	0.88	12	42.20	9.8	1920	202.86
13FVB28	8"	200	7.87	200.0	19.75	501.6	10.62	0.06	13.00	15.00	1.62	1.00	12	42.52	11.73	3600	384.33

PRESSURE TEMPERATURE RATINGS (BODY)

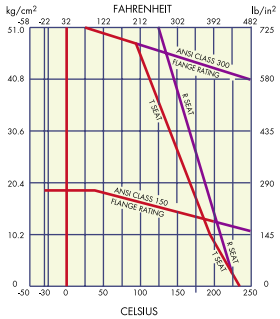

MATERIALS LIST

NO.	PART NAME	MATERIAL	QTY
1	BODY	ASTM A351 Gr. CF8M	1
2	CAP	ASTM A351 Gr. CF8M	1
3	BALL	ASTM A351 Gr. CF8M	1
4	STEM	ASTM A276 Gr. 316	1
5	SEAT	PTFE+15% G/F	2
6	GASKET	PTFE	1
7	THRUST WASHER	PTFE	1
8	PACKING	PTFE	1
9	GLAND	ASTM A351 Gr. CF8	1
10	STOPPER	SS304	1
11	SNAP RING	SS304	2
12	GLAND BOLT	ASTM A193 Gr. B8	2
13	STUD BOLT	ASTM A193 Gr. B8	4-12
14	SET NUT	ASTM A194 Gr. 8M	4-12
15	HANDLE	ASTM A536 Gr. 65, 45 & 12	1

**** SIZES SHOWN ARE APPROXIMATE AND MAY VARY***

PINACLE



DESIGN FEATURES

- 2 PC 150# Full Port FS
- Steam rating: 150 PSI WSP
- ISO 5211 actuator mounting pad
- Blow-out-proof stem design
- Anti-static device
- Adjustable stem packing
- Locking device
- Body: ASTM A351 Gr.CF8M for TC-5000
  ASTM A216 Gr.WCB for TC-5100
- ME-PTFE Seal Kits: Replaces PTFE, RPTFE and FPA
  Low deformation under load
  Low permeation
- Temperature rating: -45.5°C (-50°F) to 246°C (475°F)
- Long cycle life
- ANSI B16.5, B16.10 and B16.34 full compliance
- Test standard: API 598
- API 607 approval



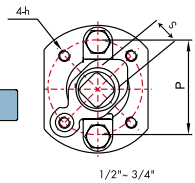

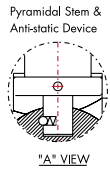

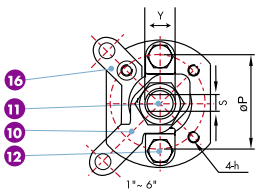

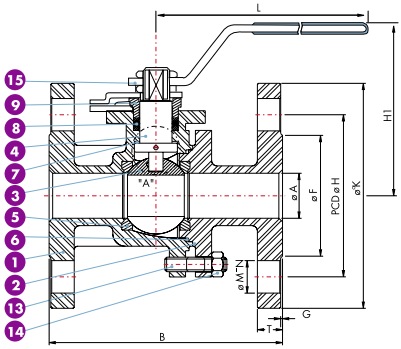

DIMENSIONS

SIZE		A	B	F	G	H	K	T	M	N	P		L	H1	h	Cv Factor	Weight Lb
inch	mm	inch	inch	inch	inch	inch	inch	inch	inch		inch	mm	inch	inch			
1/2"	15	0.59	4.25	1.38	0.06	2.38	3.50	0.44	0.62	4	1.65	42	5.18	2.91	M5xP0.8	26	4.41
3/4"	20	0.79	4.62	1.69	0.06	2.75	3.88	0.44	0.62	4	1.65	42	5.18	2.94	M5xP0.8	55	5.51
1"	25	0.98	5.00	2.00	0.06	3.12	4.25	0.44	0.62	4	1.97	50	6.42	3.44	M6xP1.0	110	6.62
11/4"	32	1.26	5.50	2.50	0.06	3.50	4.62	0.50	0.62	4	1.97	50	6.42	3.63	M6xP1.0	180	9.92
11/2"	40	1.50	6.50	2.88	0.06	3.88	5.00	0.56	0.62	4	2.76	70	9.13	4.76	M8xP1.25	270	13.23
2"	50	1.97	7.00	3.62	0.06	4.75	6.00	0.62	0.75	4	2.76	70	9.13	5.08	M8xP1.25	500	18.74
21/2"	65	2.56	7.50	4.12	0.06	5.50	7.00	0.69	0.75	4	2.76	70	9.13	5.55	M8xP1.25	800	28.67
3"	80	3.15	8.00	5.00	0.06	6.00	7.50	0.75	0.75	4	4.02	102	12.87	6.52	M10xP1.5	1150	39.69
4"	100	3.94	9.00	6.19	0.06	7.50	9.00	0.94	0.75	8	4.02	102	12.87	7.11	M10xP1.5	2120	61.74
6"	150	5.91	15.50	8.50	0.06	9.50	11.00	1.00	0.88	8	4.92	125	42.26	9.95	M12xP1.75	5100	165.38

PRESSURE TEMPERATURE RATINGS
(ME-PTFE SEATS)

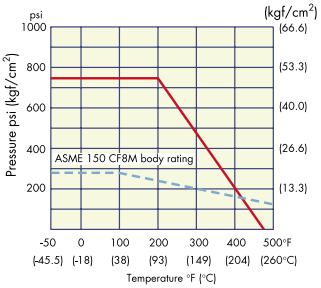

MATERIALS LIST

NO.	PART NAME	MATERIAL	QTY
1	BODY	ASTM A351 Gr. CF8M	1
2	CAP	ASTM A351 Gr. CF8M	1
3	BALL	ASTM A351 Gr. CF8M	1
4	STEM	ASTM A276 Gr. 316	1
5	SEAT	ME-PTFE*	2
6	GASKET	SPIRAL-WOUND GASKET	1
7	THRUST WASHER	ME-PTFE*	1
8	PACKING	ME-PTFE*	1
9	GLAND	ASTM A351 Gr. CF8	1
10	STOPPER	SS304	1
11	SNAP RING	SS304	2
12	GLAND BOLT	ASTM A193 Gr. B8	2
13	STUD BOLT	ASTM A193 Gr. B8	4~10
14	SET NUT	ASTM A194 Gr. 8	4~10
15	HANDLE	SS304	1
16	LOCKING PLATE	SS304	1

*ME-PTFE IS MOLECULARLY ENHANCED PTFE

**** SIZES SHOWN ARE APPROXIMATE AND MAY VARY***



DESIGN FEATURES

- Pressure rating: 200 PSI WOG (NON-SHOCK)
- Steam Rating: 150 PSI WSP
- Investment cast body & cap
- Screwed cap
- Swing type disc

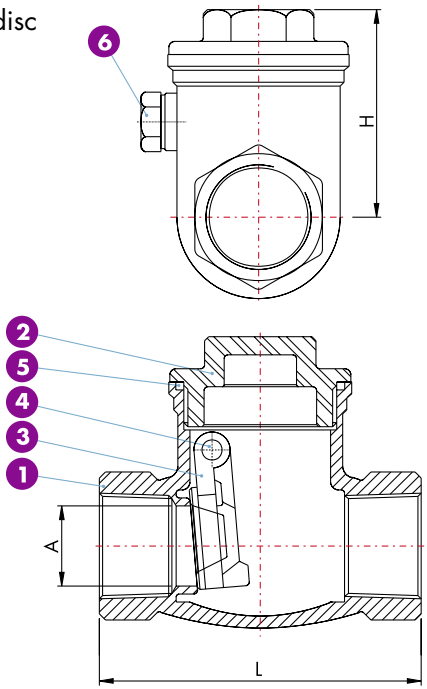

DIMENSIONS

CODES	SIZE		A		L		H		Cv Factor	Weight Lb
	inch	mm	inch	mm	inch	mm	inch	mm		
13TCV025	1/4"	8	0.39	10	2.56	65.0	1.77	45	–	0.73
13TCV0375	3/8"	10	0.47	12	2.56	65.0	1.77	45	4	0.68
13TCV05	1/2"	15	0.59	15	2.60	66.0	1.81	46	6.5	0.64
13TCV075	3/4"	20	0.79	20	3.19	81.0	2.13	54	15	1.08
13TCV1	1"	25	0.98	25	3.58	91.0	2.36	60	28	1.52
13TCV125	11/4"	32	1.26	32	4.19	106.5	2.83	72	45	2.32
13TCV15	11/2"	40	1.57	40	4.76	121.0	2.95	75	65	3.48
13TCV2	2"	50	1.97	50	5.59	142.0	3.23	82	120	5.16
13TCV25	21/2"	65	2.56	65	6.26	159.0	3.54	90	180	8.38
13TCV3	3"	80	3.15	80	7.48	190.0	4.09	104	280	13.01

PRESSURE TEMPERATURE RATINGS (BODY)

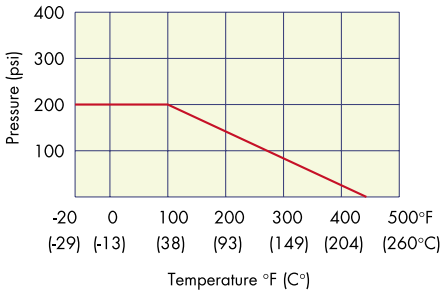

MATERIALS LIST

NO.	PART NAME	MATERIAL	QTY
1	BODY	ASTM A351 Gr. CF8M	1
2	CAP	ASTM A351 Gr. CF8M	1
3	DISC	ASTM A351 Gr. CF8M	1
4	HINGE PIN	SS316	1
5	GASKET	PTFE	1
6	PLUG	SS316	1

**** SIZES SHOWN ARE APPROXIMATE AND MAY VARY***



DESIGN FEATURES

- Investment cast body & cap
- Screwed-in cap
- Connecting threads: ANSI B2.1/BS21

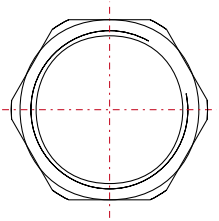

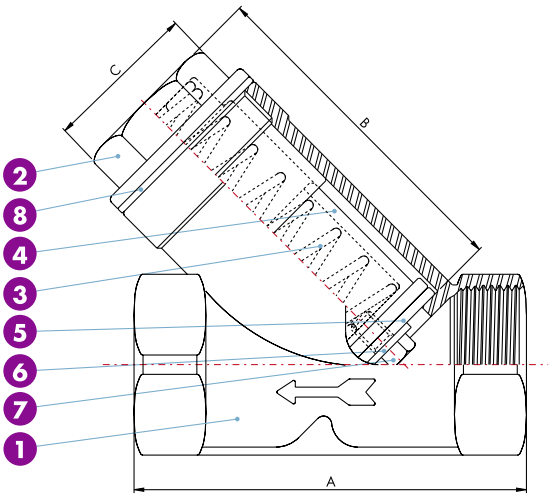

DIMENSIONS

CODES	SIZE		A		B		C		Cv Factor	Weight Lb	Cracking Pressure
	inch	mm	inch	mm	inch	mm	inch	mm			
13TYC025	1/4"	8	2.56	65	1.81	46	0.75	19	2	0.62	0.435
13TYC0375	3/8"	10	2.56	65	1.81	46	0.75	19	3.8	0.54	0.435
13TYC05	1/2"	15	2.56	65	1.81	46	0.75	19	6.3	0.71	0.435
13TYC075	3/4"	20	3.15	80	2.28	58	0.91	23	14	0.95	0.464
13TYC1	1"	25	3.54	90	2.72	69	1.06	27	27	1.62	0.464
13TYC125	11/4"	32	4.13	105	2.95	75	1.26	32	43	2.15	0.508
13TYC15	11/2"	40	4.72	120	3.35	85	1.61	41	64	3.15	0.508
13TYC2	2"	50	5.51	140	3.86	98	1.97	50	116	4.85	0.580
13TYC25	21/2"	65	6.69	170	4.62	117	2.56	65	185	9.75	0.653
13TYC3	3"	80	7.87	200	5.35	136	3.15	80	270	14.35	-

PRESSURE TEMPERATURE RATINGS (BODY)

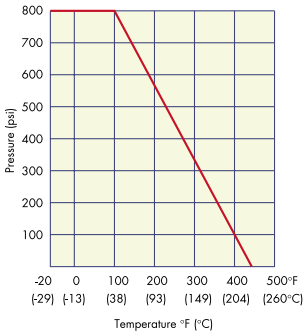

MATERIALS LIST

NO.	PART NAME	MATERIAL	QTY
1	BODY	ASTM A351 Gr. CF8M	1
2	CAP	ASTM A351 Gr. CF8M	1
3	SPRING	SS304	1
4	DISC	SS316	1
5	SEAT	TEFLON	1
6	WASHER	SS304	1
7	BOLT	SS304	1
8	GASKET PACKING	TEFLON	1

**** SIZES SHOWN ARE APPROXIMATE AND MAY VARY***



DESIGN FEATURES

- Pressure rating: 200 PSI WOG (NON-SHOCK)
- Investment cast body & bonnet
- Screwed bonnet
- Rising stem and wheel

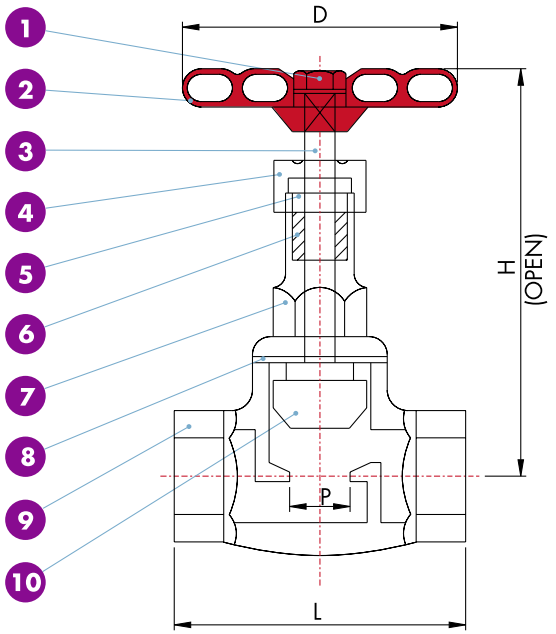

DIMENSIONS

CODES	SIZE		P		L		H (OPEN)		D		Cv Factor	Weight Lb
	inch	mm	inch	mm	inch	mm	inch	mm	inch	mm		
13TGLV025	1/4"	8	0.39	10	2.05	52.0	4.02	102	2.36	60.0	1	1.04
13TGLV0375	3/8"	10	0.47	12	2.05	52.0	4.02	102	2.36	60.0	1.5	1.01
13TGLV05	1/2"	15	0.47	12	2.60	66.0	3.74	95	2.76	70.0	2.5	1.46
13TGLV075	3/4"	20	0.59	15	2.70	68.5	3.90	99	2.76	70.0	5.6	1.46
13TGLV1	1"	25	0.79	20	3.08	78.3	4.02	102	3.01	76.5	10.5	2.1
13TGLV125	11/4"	32	0.98	25	3.39	86.0	4.96	126	4.07	103.5	17	3.11
13TGLV15	11/2"	40	1.30	33	3.86	98.0	5.35	136	4.07	103.5	25	4.83
13TGLV2	2"	50	1.57	40	4.35	110.5	6.14	156	4.76	121.0	46	6.09

PRESSURE TEMPERATURE RATINGS (BODY)

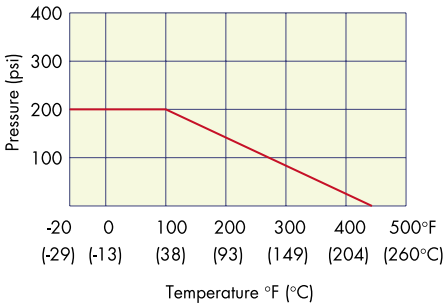

MATERIALS LIST

NO.	PART NAME	MATERIAL	QTY
1	NUT	SS304	1
2	HANDWHEEL	SS400	1
3	STEM	ASTM A276 Gr. 316	1
4	GLAND NUT	ASTM A351 Gr. CF8M	1
5	GLAND	ASTM A351 Gr. CF8M	1
6	GLAND PACKING	PTFE	1
7	BONNET	ASTM A351 Gr. CF8M	1
8	GASKET	PTFE	1
9	BODY	ASTM A351 Gr. CF8M	1
10	DISC	ASTM A351 Gr. CF8M	1

**** SIZES SHOWN ARE APPROXIMATE AND MAY VARY***



DESIGN FEATURES

- Pressure rating: 200 PSI WOG (NON-SHOCK)
- Investment cast body & bonnet
- Non-rising stem
- Solid wedge disc

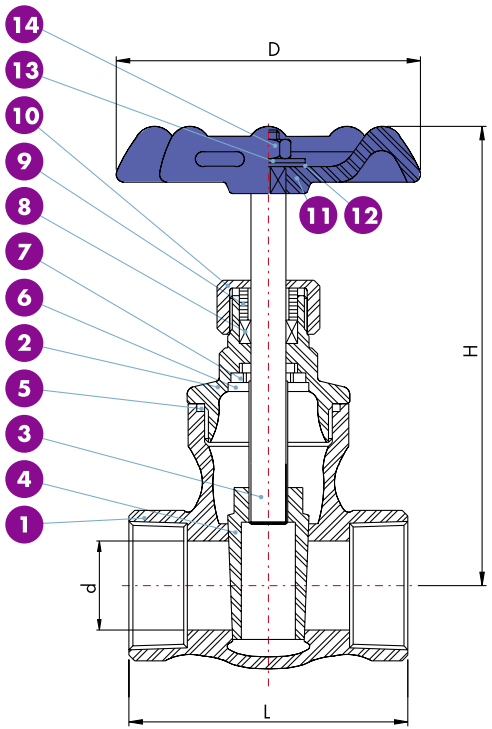

DIMENSIONS

CODES	SIZE		d		L		H		D		Cv Factor	Weight Lb
	inch	mm	inch	mm	inch	mm	inch	mm	inch	mm		
13TGAV05	1/2"	15	0.63	16.1	2.24	57.0	3.88	98.6	2.76	70.0	15	0.93
13TGAV075	3/4"	20	0.80	20.3	2.38	60.5	4.06	103.0	2.76	70.0	37	1.24
13TGAV1	1"	25	1.02	26.0	2.64	67.0	4.53	115.0	3.01	76.5	72	1.61
13TGAV125	11/4"	32	1.25	31.8	2.99	76.0	5.04	128.0	3.01	76.5	110	2.14
13TGAV15	11/2"	40	1.57	40.0	3.43	87.0	6.81	173.0	4.07	103.5	165	2.96
13TGAV2	2"	50	1.98	50.3	3.74	95.0	7.44	189.0	4.76	121.0	320	4.26

PRESSURE TEMPERATURE RATINGS (BODY)

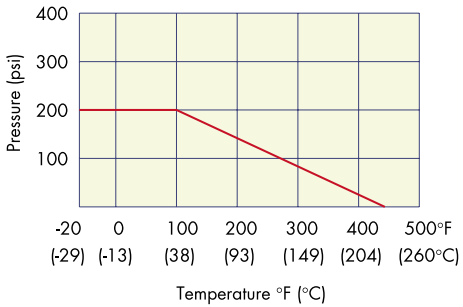

MATERIALS LIST

NO.	PART NAME	MATERIAL	QTY
1	BODY	ASTM A351 Gr. CF8M	1
2	BONNET	ASTM A351 Gr. CF8M	1
3	STEM	ASTM A276 Gr. 316	1
4	DISC	ASTM A351 Gr. CF8M	1
5	GASKET	PTFE	1
6	STOP RING	SS304	1
7	STEM HOLDER	SS316	1
8	STEM PACKING	PTFE	1
9	GLAND	SS304	1
10	GLAND NUT	SS316	1
11	HANDLEWHEEL	SS400	1
12	NAME PLATE	ALUMINUM	1
13	HANDLEWHEEL WASHER	SS304	1
14	HANDLEWHEEL NUT	SS304	1

**** SIZES SHOWN ARE APPROXIMATE AND MAY VARY***



DESIGN FEATURES

- "L" Port
- Pressure rating: 1000 PSI WOG (NON-SHOCK)
- Steam Rating: 150 PSI WSP
- Investment cast body & cap
- Bottom-loaded, Blow-out-proof stem
- Adjustable stem packing
- Stainless Steel handle with vinyl grip
- Locking device

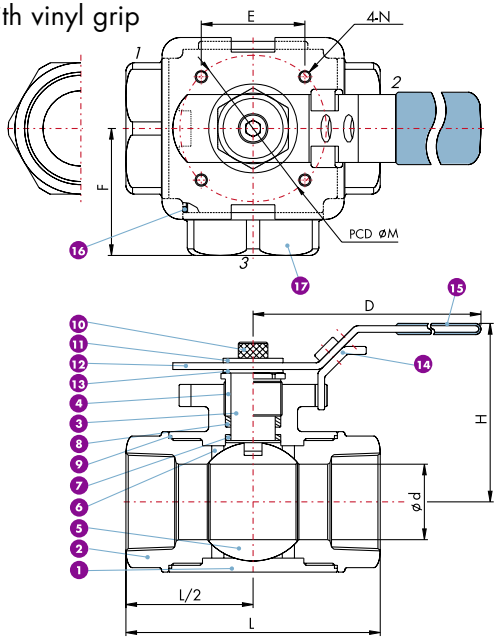

DIMENSIONS

CODES	SIZE		d		L		H	D	E		F		M		N	Cv Factor	Weight Lb
	inch	mm	inch	mm	inch	mm	inch	inch	inch	mm	inch	mm	inch	mm			
13TBVL025	1/4"	8	0.43	11.0	2.68	68	2.28	4.17	1.17	29.7	1.34	34.0	1.65	42	M5 x P0.8	6.0	1.32
13TBVL0375	3/8"	10	0.43	11.0	2.68	68	2.28	4.17	1.17	29.7	1.34	34.0	1.65	42	M5 x P0.8	6.0	1.32
13TBVL05	1/2"	15	0.50	12.7	2.95	75	2.40	5.43	1.17	29.7	1.48	37.5	1.65	42	M5 x P0.8	12.0	1.47
13TBVL075	3/4"	20	0.63	16.0	3.39	86	2.91	5.43	1.39	35.4	1.69	43.0	1.97	50	M6 x P1.0	15.5	2.62
13TBVL1	1"	25	0.79	20.0	4.06	103	3.19	6.38	1.39	35.4	2.03	51.5	1.97	50	M6 x P1.0	20.0	3.75
13TBVL125	11/4"	32	0.98	25.0	4.53	115	3.46	6.38	1.39	35.4	2.26	57.5	1.97	50	M6 x P1.0	37.0	5.27
13TBVL15	11/2"	40	1.26	32.0	4.92	125	4.09	8.66	1.95	49.5	2.46	62.5	2.76	70	M8 x P1.25	103.0	7.5
13TBVL2	2"	50	1.50	38.1	5.75	146	4.33	8.66	1.95	49.5	2.87	73.0	2.76	70	M8 x P1.25	143.0	12.13

PRESSURE TEMPERATURE RATINGS (BODY)

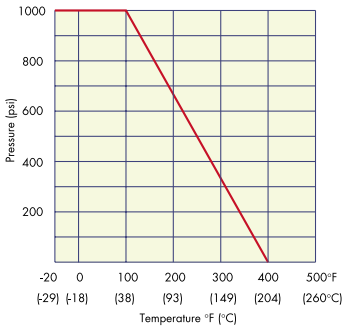

MATERIALS LIST

NO.	PART NAME	MATERIAL	QTY
1	BODY	ASTM A351 Gr. CF8M	1
2	CAP2	ASTM A351 Gr. CF8M	2
3	STEM	ASTM A276 Gr. 316	1
4	GLAND NUT	SS304	1
5	BALL	ASTM A351 Gr. CF8M	1
6	SEAT	PTFE+15% G/F	4
7	THRUST WASHER	PTFE	1
8	PACKINGS	PTFE	1
9	JOINT GASKET1	PTFE	2
10	STEM BOLT	SS304	1
11	WASHER	SS304	1
12	HANDLE	SS304	1
13	STEM WASHER	SS304	1
14	LOCATING LOCK*	SS304	1
15	HANDLE SLEEVE	VINYL GRIP	1
16	JOINT GASKET	PTFE	1
17	CAP1	ASTM A351 Gr. CF8M	1

* OPTION

**** SIZES SHOWN ARE APPROXIMATE AND MAY VARY***



DESIGN FEATURES

- "T" Port
- Pressure rating: 1000 PSI WOG (NON-SHOCK)
- Steam Rating: 150 PSI WSP
- Investment cast body & cap
- Bottom-loaded, Blow-out-proof stem
- Adjustable stem packing
- Actuator mounting pad
- Stainless Steel handle with vinyl grip
- Locking device

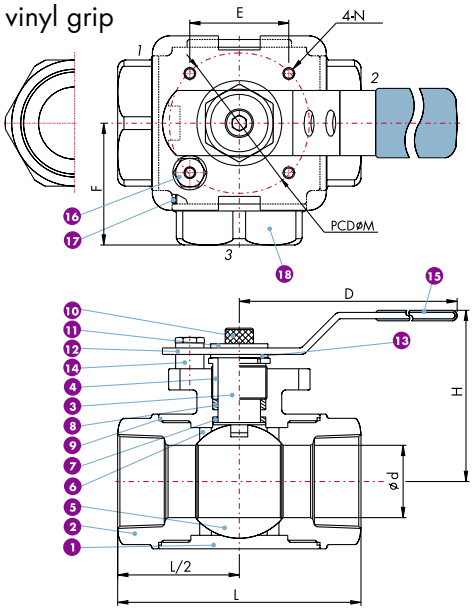

DIMENSIONS

CODES	SIZE		d		L		H	D	E		F		M		N	Cv Factor	Weight Lb
	inch	mm	inch	mm	inch	mm	inch	inch	inch	mm	inch	mm	inch	mm			
13TBVT025	1/4"	8	0.43	11.0	2.68	68	2.28	4.17	1.17	29.7	1.34	34.0	1.65	42	M5 x P0.8	6.0	1.32
13TBVT0375	3/8"	10	0.43	11.0	2.68	68	2.28	4.17	1.17	29.7	1.34	34.0	1.65	42	M5 x P0.8	6.0	1.32
13TBVT05	1/2"	15	0.50	12.7	2.95	75	2.40	5.43	1.17	29.7	1.48	37.5	1.65	42	M5 x P0.8	12.0	1.47
13TBVT075	3/4"	20	0.63	16.0	3.39	86	2.91	5.43	1.39	35.4	1.69	43.0	1.97	50	M6 x P1.0	15.5	2.62
13TBVT1	1"	25	0.79	20.0	4.06	103	3.19	6.38	1.39	35.4	2.03	51.5	1.97	50	M6 x P1.0	20.0	3.75
13TBVT125	11/4"	32	0.98	25.0	4.53	115	3.46	6.38	1.39	35.4	2.26	57.5	1.97	50	M6 x P1.0	37.0	5.27
13TBVT15	11/2"	40	1.26	32.0	4.92	125	4.09	8.66	1.95	49.5	2.46	62.5	2.76	70	M8 x P1.25	103.0	7.5
13TBVT2	2"	50	1.50	38.1	5.75	146	4.33	8.66	1.95	49.5	2.87	73.0	2.76	70	M8 x P1.25	143.0	12.13

PRESSURE TEMPERATURE RATINGS (BODY)

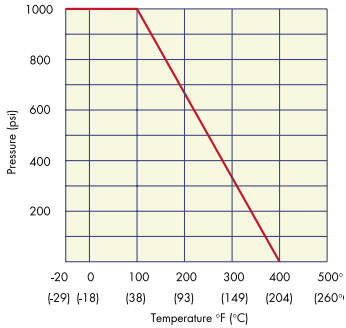

MATERIALS LIST

NO.	PART NAME	MATERIAL	QTY
1	BODY	ASTM A351 Gr. CF8M	1
2	CAP2	ASTM A351 Gr. CF8M	2
3	STEM	ASTM A276 Gr. 316	1
4	GLAND NUT	SS304	1
5	BALL	ASTM A351 Gr. CF8M	1
6	SEAT	PTFE+15% G/F	4
7	THRUST WASHER	PTFE	1
8	PACKINGS	PTFE	1
9	JOINT GASKET1	PTFE	2
10	STEM BOLT	SS304	1
11	WASHER	SS304	1
12	HANDLE	SS304	1
13	STEM WASHER	SS304	1
14	SET SCREW	SS304	1
15	HANDLE SLEEVE	VINYL GRIP	1
16	SET BOLT	SS304	1
17	JOINT GASKET	PTFE	1
18	CAP1	ASTM A351 Gr. CF8M	1

**** SIZES SHOWN ARE APPROXIMATE AND MAY VARY***



DESIGN FEATURES

- 800 WOG
- Investment cast body & cap
- SS316 screen. 4 mm thick perforated, 1.0 mm hole with 2.0 mm staggering
- Screwed-in cap
- Connecting threads: ANSI B2.1/BS21

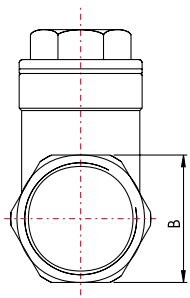

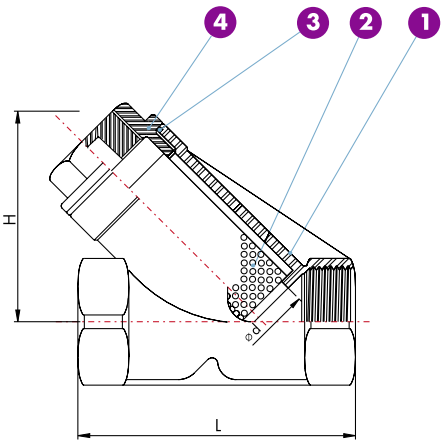

DIMENSIONS

CODES	SIZE		d		B		H		L		Weight	
	inch	mm	inch	mm	inch	mm	inch	mm	inch	mm	Kg	Lb
13TYS025	1/4"	8	0.31	8	1.02	26	2.01	51	2.56	65	0.26	0.57
13TYS0375	3/8"	10	0.39	10	1.02	26	2.01	51	2.56	65	0.23	0.50
13TYS05	1/2"	15	0.59	15	1.02	26	2.01	51	2.56	65	0.30	0.66
13TYS075	3/4"	20	0.79	20	1.30	33	2.36	60	3.15	80	0.40	0.88
13TYS1	1"	25	0.98	25	1.61	41	2.83	72	3.54	90	0.70	1.54
13TYS125	11/4"	32	1.26	32	1.93	49	3.03	77	4.13	105	0.90	1.99
13TYS15	11/2"	40	1.57	40	2.20	56	3.43	87	4.72	120	1.30	2.87
13TYS2	2"	50	1.97	50	2.72	69	4.06	103	5.51	140	2.10	4.63
13TYS25	21/2"	65	2.56	65	3.43	87	4.72	120	6.69	170	4.30	9.47
13TYS3	3"	80	3.15	80	4.02	102	5.51	140	7.87	200	6.30	13.88

PRESSURE TEMPERATURE RATINGS

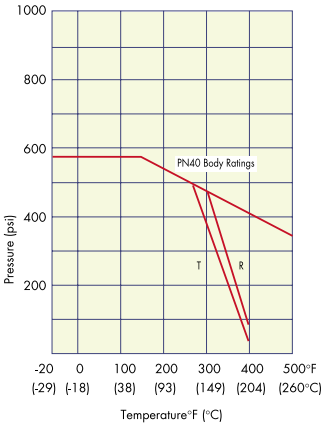

MATERIALS LIST

NO.	PART NAME	MATERIAL	QTY
1	BODY	ASTM A351 Gr. CF8M	1
2	SCREEN	SS316 SCREEN	1
3	GASKET	TEFLON	1
4	CAP	ASTM A351 Gr. CF8M	1

**** SIZES SHOWN ARE APPROXIMATE AND MAY VARY***



DESIGN FEATURES

- Investment casting
- Screwed-in bonnet
- Rising stem
- T handle operation
- Connecting threads ANSI B2.1, BS21 and DIN
- Working pressure: 6000 lb/IN^2

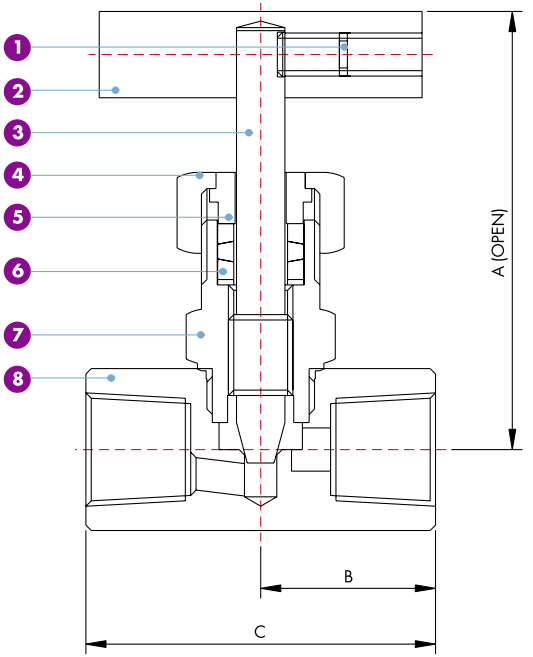

DIMENSIONS

CODES	SIZE		A		B		C		Weight
	inch	mm	inch	mm	inch	mm	inch	mm	Lb
13TNV0125	1/8"	6	2.95	75	1.15	29.0	2.28	58	0.65
13TNV025	1/4"	8	2.95	75	1.15	29.0	2.28	58	0.61
13TNV0375	3/8"	10	2.95	75	1.15	29.0	2.28	58	0.73
13TNV05	1/2"	15	3.45	87	1.28	32.5	2.56	65	1.22
13TNV075	3/4"	20	3.55	90	1.38	35.0	2.76	70	1.44
13TNV1	1"	25	4.05	103	1.58	40.0	3.15	80	3.09

MATERIALS LIST

NO.	PART NAME	SPECIFICATION	QTY
1	SET SCREW	SS304	1
2	HANDLE	SS410	1
3	STEM	SS316	1
4	GLAND NUT	SS304	1
5	GLAND	SS304	1
6	PACKING	TEFLON	1
7	BONNET	ASTM A351 Gr. CF8M	1
8	BODY	ASTM A351 Gr. CF8M	1

Please refer to our Section "F" from page F-12 for more needle valves.

** SIZES SHOWN ARE APPROXIMATE AND MAY VARY*



DESIGN FEATURES

- Swing type
- Body: ASTM A351 Gr. CF8M
- Disc: ASTM A351 Gr. CF8M
- End Type: Flange end
- Face to Face: ANSI B16.10
- Flange Dimensions: ANSI B16.5 Class 150
- Wall thickness: ANSI B16.34

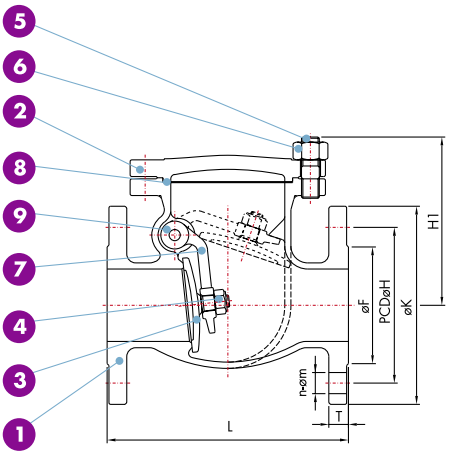

DIMENSIONS

CODES	SIZE		L		H1		K		H	F		T		M	N	Cv	Weight
	inch	mm	inch	mm	inch	mm	inch	mm	inch	inch	mm	inch	mm	inch		Factor	Lb
13FCV05	1/2"	15	4.25	108	2.87	73	3.50	89	2.38	1.38	35	0.44	11.1	0.62	4	9.5	5.05
13FCV075	3/4"	20	4.61	117	2.95	75	3.86	98	2.76	1.69	43	0.44	11.1	0.62	4	16	6.24
13FCV1	1	25	5.00	127	3.15	80	4.25	108	3.13	2.01	51	0.44	11.1	0.62	4	27	8.47
13FCV15	11/2"	40	6.50	165	4.37	111	5.00	127	3.88	2.87	73	0.56	14.3	0.62	4	70	10.23
13FCV2	2"	50	7.99	203	4.84	123	5.98	152	4.74	3.62	92	0.63	15.9	0.75	4	120	13.36
13FCV25	21/2"	65	8.50	216	5.28	134	7.01	178	5.49	4.13	105	0.69	17.5	0.75	4	170	27.10
13FCV3	3"	80	9.49	241	5.83	148	7.48	190	6.00	5.00	127	0.75	19.1	0.75	4	250	48.36
13FCV4	4"	100	11.50	292	6.22	158	9.02	229	7.50	6.18	157	0.94	23.9	0.75	8	470	72.81
13FCV5	5"	125	12.99	330	7.56	192	10.00	254	8.50	7.32	186	0.94	23.9	0.88	8	–	92.61
13FCV6	6"	150	14.02	356	8.78	223	10.98	279	9.51	8.50	216	1.00	25.4	0.88	8	1100	136.71
13FCV8	8"	200	19.49	495	11.14	283	13.50	343	11.75	10.63	270	1.13	28.6	0.88	8	2000	233.73
13FCV10	10"	250	24.49	622	12.52	318	15.98	406	14.25	12.76	324	1.19	30.2	1.00	12	–	359.42
13FCV12	12"	300	27.48	698	14.06	357	19.02	483	17.01	15.00	381	1.25	31.8	1.00	12	–	551.25

MATERIALS LIST

NO.	PART NAME	MATERIAL SS316	QTY
1	BODY	ASTM A351 Gr. CF8M	1
2	COVER	ASTM A351 Gr. CF8M	1
3	DISC	ASTM A351 Gr. CF8M	1
4	DISC NUT	ASTM A194 Gr. 8	1
5	COVER BOLT	ASTM A193 Gr. B8	4-12
6	COVER NUT	ASTM A194 Gr. 8	4-12
7	ARM	ASTM A351 Gr. CF8M	1
8	GASKET	PTFE	1
9	PLUG	SS316	1

Also available in Class 300

** SIZES SHOWN ARE APPROXIMATE AND MAY VARY*



DESIGN FEATURES

- Rising stem
- Body: ASTM A351 Gr. CF8M
- Disc: ASTM A351 Gr. CF8M
- Stem: SS316
- End Type: Flange end
- Face to Face: ANSI B16.10
- Flange Dimensions: ANSI B16.5 150 lbs
- Wall thickness: ANSI B16.34

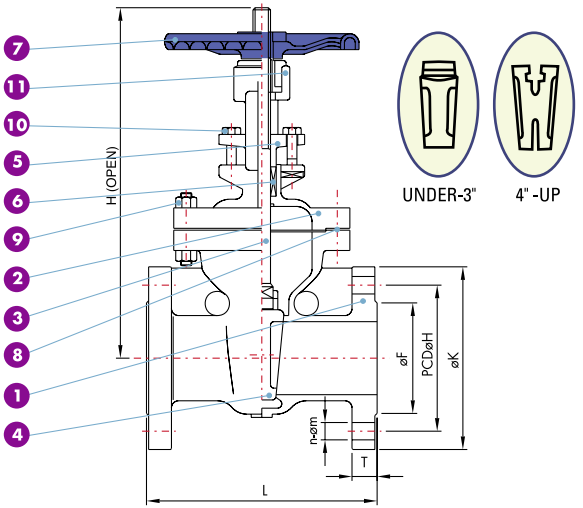

DIMENSIONS

CODES	SIZE		L		H1		K		H	F		T		M	N	Cv Factor	Weight Lb
	inch	mm	inch	mm	inch	mm	inch	mm	inch	inch	mm	inch	mm	inch			
13FGAV05	1/2"	15	4.25	108	8.03	204	3.94	100	2.38	1.38	35	0.44	11.1	0.62	4	19	7.28
13FGAV075	3/4"	20	4.61	117	8.23	209	3.94	100	2.76	1.69	43	0.44	11.1	0.62	4	36	9.70
13FGAV1	1	25	5.00	127	9.02	229	3.94	100	3.13	2.01	51	0.44	11.1	0.62	4	57	11.31
13FGAV15	11/2"	40	6.50	165	11.14	283	5.51	140	3.88	2.87	73	0.56	14.3	0.62	4	140	17.09
13FGAV2	2"	50	7.01	178	13.07	332	6.30	160	4.74	3.62	92	0.63	15.9	0.75	4	240	25.09
13FGAV25	21/2"	65	7.48	190	15.63	397	7.09	180	5.49	4.13	105	0.69	17.5	0.75	4	360	46.31
13FGAV3	3"	80	7.99	203	17.28	439	7.87	200	6.00	5.00	127	0.75	19.1	0.75	4	580	56.56
13FGAV4	4"	100	9.02	229	20.39	518	8.82	224	7.50	6.18	157	0.94	23.9	0.75	8	950	82.42
13FGAV5	5"	125	10.00	254	24.45	621	9.84	250	8.52	7.32	186	0.94	23.9	0.88	8	NA	110.25
13FGAV6	6"	150	10.51	267	28.11	714	11.02	280	9.51	8.50	216	1.00	25.4	0.88	8	2400	119.07
13FGAV8	8"	200	11.50	292	35.98	914	11.81	300	11.75	10.63	270	1.13	28.6	0.88	8	4200	198.45
13FGAV10	10"	250	12.99	330	43.62	1108	13.98	355	14.25	12.76	324	1.19	30.2	1.00	12	6800	343.98
13FGAV12	12"	300	14.02	356	61.14	1553	23.62	600	17.01	15.00	381	1.25	31.8	1.00	12	9900	534.71

MATERIALS LIST

NO.	PART NAME	MATERIAL SS316	QTY
1	BODY	ASTM A351 Gr. CF8M	1
2	BONNET	ASTM A351 Gr. CF8M	1
3	STEM	ASTM A276 Gr. 316	1
4	DISC	ASTM A351 Gr. CF8M	1
5	GLAND	ASTM A351 Gr. CF8	1
6	GLAND PACKING	PTFE	1
7	HAND WHEEL	ASTM A536 Gr. B65, 45 & 12	1
8	GASKET	PTFE (OR NON ASBESTOS)	1
9	BONNET BOLT/NUT	ASTM A193 Gr. B8/ASTM A194 Gr. 8	4-16
10	GLAND BOLT/NUT	ASTM A193 Gr. B8/ASTM A194 Gr. 8	2
11	YOKE SLEEVE	BRONZE (OR DUCTILENI-RESIST)	1

Also available in Class 300

** SIZES SHOWN ARE APPROXIMATE AND MAY VARY*



DESIGN FEATURES

- Rising stem
- O.S. & Yoke, Flexible Wedge
- Body: ASTM A351 Gr. CF8M
- Disc: ASTM A351 Gr. CF8M
- Stem: SS316
- Packing: PTFE
- End Type: Flange end
- Face to Face: ANSI B16.10
- Flange Dimensions: ANSI B16.5 150 lbs
- Wall thickness: ANSI B16.34

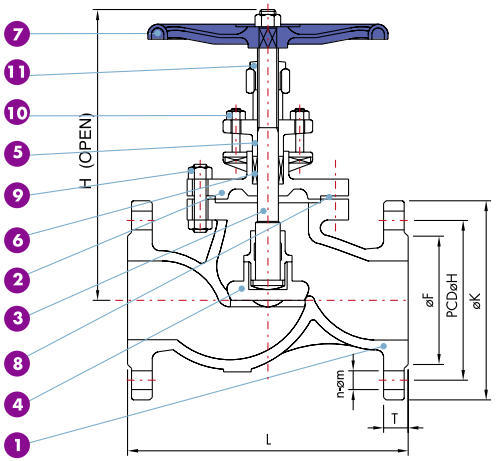

DIMENSIONS

CODES	SIZE		L		H1		K		H	F		T		M	N	Cv Factor	Weight Lb
	inch	mm	inch	mm	inch	mm	inch	mm	inch	inch	mm	inch	mm	inch			
13FGLV05	1/2"	15	4.25	108	6.77	172	3.94	100	2.38	1.38	35	0.44	11.1	0.62	4	5	7.67
13FGLV075	3/4"	20	4.61	117	6.77	172	3.94	100	2.76	1.69	43	0.44	11.1	0.62	4	8.5	9.31
13FGLV1	1	25	5.00	127	6.89	175	3.94	100	3.13	2.01	51	0.44	11.1	0.62	4	11	11.66
13FGLV15	11/2"	40	6.50	165	8.15	207	5.51	140	3.88	2.87	73	0.56	14.3	0.62	4	32	18.43
13FGLV2	2"	50	7.99	203	9.13	232	6.30	160	4.74	3.62	92	0.63	15.9	0.75	4	48	28.44
13FGLV25	21/2"	65	8.50	216	10.75	273	7.09	180	5.49	4.13	105	0.69	17.5	0.75	4	80	44.10
13FGLV3	3"	80	9.49	241	11.93	303	7.87	200	6.00	5.00	127	0.75	19.1	0.75	4	110	56.91
13FGLV4	4"	100	11.50	229	13.39	340	8.82	224	7.50	6.18	157	0.94	23.9	0.75	8	190	87.16
13FGLV5	5"	125	14.02	356	15.16	385	9.84	250	8.50	7.32	186	0.94	23.9	0.88	8	–	117.97
13FGLV6	6"	150	15.98	406	17.64	448	11.81	300	9.51	8.50	216	1.00	25.4	0.88	8	450	154.35
13FGLV8	8"	200	19.49	495	21.46	545	13.98	355	11.75	10.63	270	1.13	28.6	0.88	8	800	294.37
13FGLV10	10"	250	24.49	622	26.22	666	17.72	450	14.25	12.76	324	1.19	30.2	1.00	12	–	433.28

MATERIALS LIST

NO.	PART NAME	MATERIAL SS316	QTY
1	BODY	ASTM A351 Gr. CF8M	1
2	BONNET	ASTM A351 Gr. CF8M	1
3	STEM	ASTM A276 Gr. 316	1
4	DISC	ASTM A351 Gr. CF8M	1
5	GLAND	ASTM A351 Gr. CF8	1
6	GLAND PACKING	PTFE	1
7	HAND WHEEL	ASTM A536 Gr. B65, 45 & 12	1
8	GASKET	PTFE (OR NON ASBESTOS)	1
9	BONNET BOLT/NUT	ASTM A193 Gr. B8/ASTM A194 Gr. 8	4-16
10	GLAND BOLT/NUT	ASTM A193 Gr. B8/ASTM A194 Gr. 8	2
11	YOKE SLEEVE	BRONZE (OR DUCTILENI-RESIST)	1

Also available in Class 300

** SIZES SHOWN ARE APPROXIMATE AND MAY VARY*

SPECIFICATIONS FLOW PATTERNS FOR 3-WAY VALVES

All flow patterns can be changed in the field without disassembling valve

L-PORT:

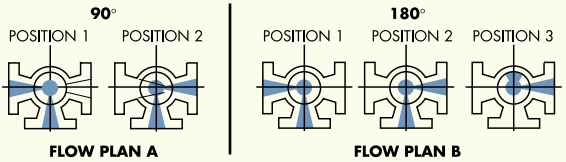

FLOW PLAN A

FLOW PLAN B

T-PORT: 90°

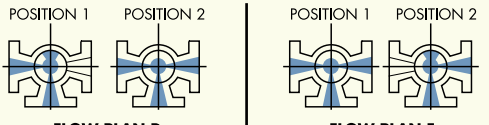

FLOW PLAN D

FLOW PLAN E

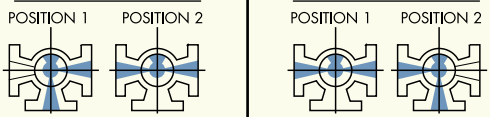

FLOW PLAN F

FLOW PLAN G

T-PORT: 180°

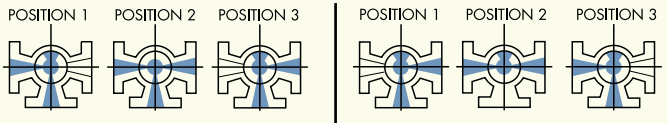

FLOW PLAN H

FLOW PLAN I

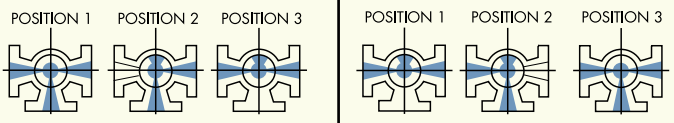

FLOW PLAN J

FLOW PLAN K

CASTING DESIGNATION

CF8 = 304
CF8M = 316
CF3 = 304-L
CF3M = 316-L

PINACLE

Type 231, 232, 233 Pneumatically Actuated Ball Valve

TAGS:
20-FV-803-1/2/3/4
23-FV-130
23-FV-330
20-FV-803-6



Standard Features

- **Size**
  3/8"-4"
- **Material**
  PVC, CPVC, PROGEF® Standard, Polypropylene, SYGEF® PVDF
- **Connection Ends**
  Socket, Flanged, Spigot (PVDF and PP only), Threaded to 2" (up to 4" in PVC)
- **Seat**
  PTFE
- **Seals**
  EPDM or FPM
- **Mounting**
  Stainless steel threaded inserts for easy and secure mounting
- **Movement**
  Fail open, fail closed, and double acting
- **Mechanical**
  Namur compliant air connection and mounting console for accessories such as positioner and feed back switches
- **Visual position indicator**

Optional Features

- **Solenoid air control valve**
- **Stroke limiter**
- **Limit switches**
- **Declutchable Manual Override**
- **Electro-pneumatic positioner**

General

The Type 230 series pneumatically actuated ball valve from Georg Fischer is the ultimate choice for the high demands of the industrial world. It is available in PVC, CPVC, Polypropylene, and PVDF material. The valve can be configured for throttling or for simple open/close functionality. The optional declutchable manual override is ideal for applications where emergency operation of the valve is required. Additionally, the electro-pneumatic positioner, stroke limiter, and feed back switches give flexibility for integration into a wide variety of applications.

+GF+

GEORG FISCHER
PIPING SYSTEMS

Technical specifications Pneumatic Actuators 11/21 and 30-45

	PA 11/21	PA 30-45
	PA11/PA21	**PA30 - PA45**
Control Medium	neutral, non aggressive gases (max. 104°F)	neutral, non aggressive gases (max. 104°F)
Operating pressure	60 psi	see table below
Max. allowable operating pressure	100 psi	100 psi
Air connection	1/8" BSP (optional NPT adapter) Namur compliant	1/8" BSP (optional NPT adapter) Namur compliant
Actuation time	1-2 seconds	1-2 seconds
Actuation angle	90° F	90° F
Mode of operation	– Fail-safe close (FC) – Fail-safe open (FO) – Double acting (DA)	– Fail-safe close (FC) – Fail-safe open (FO) – Double acting (DA)
Operating temperature	14°F - 122°F	14°F - 176°F
Permissible humidity	0-100%	0-100%
Position indicator	visual	visual
Housing material	PP - glass filled	Aluminium hard anodized

Actuator size

	3/8	½	¾	1	1¼	1½	2	2½	3	4
Fail-safe close (FC)	PA 11	PA 11	PA 11	PA 11	PA 21	PA 21	PA 21	PA 30	PA 35	PA 40
Fail-safe open (FO)	PA 11	PA 11	PA 11	PA 11	PA 21	PA 21	PA 21	PA 30	PA 35	PA 40
Double acting (DA)	PA 11	PA 11	PA 11	PA 11	PA 21	PA 21	PA 21	PA 35	PA 40	PA 45

Operating air pressure

[psi]	3/8	½	¾	1	1¼	1½	2	2½	3	4
Fail-safe close (FC)	60	60	60	60	60	60	60	43	60	60
Fail-safe open (FO)	60	60	60	60	60	60	60	43	60	60
Double acting (DA)	60	60	60	60	60	60	60	43	43	72

Ideal for Virtually any application

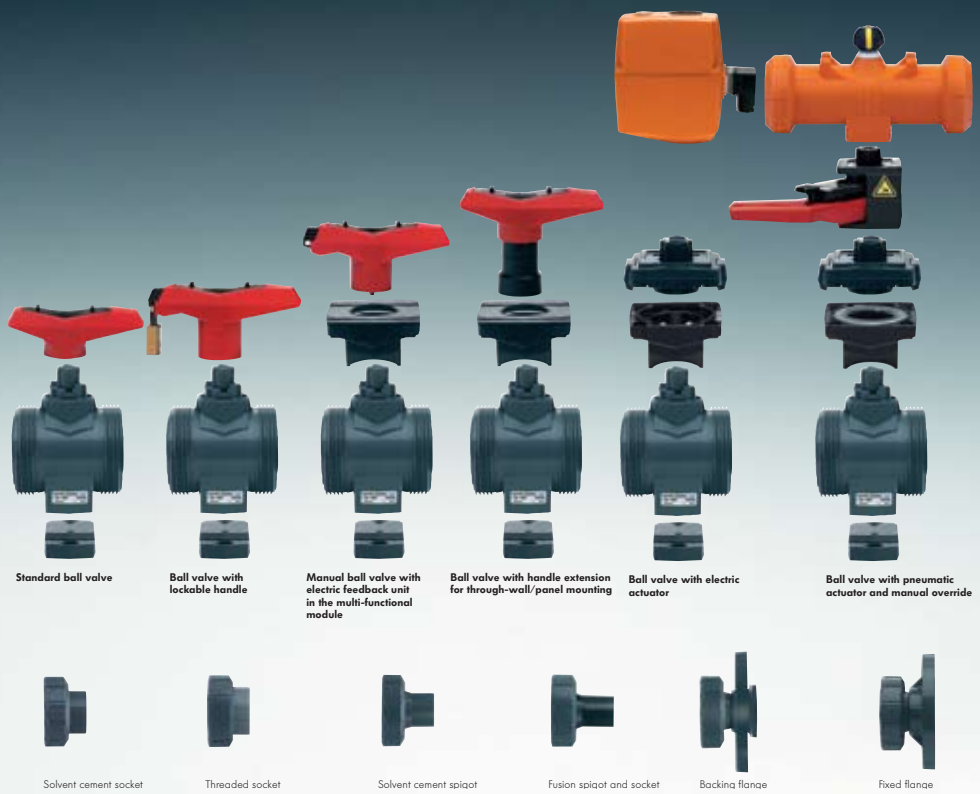

Technical Data

Pressure-Temperature Diagrams Technical data for Type 231, 232, 233 Ball Valves 3/8"-4"

The following pressure temperature diagrams are based on a lifetime of 25 years and the medium water or similar media

PVC

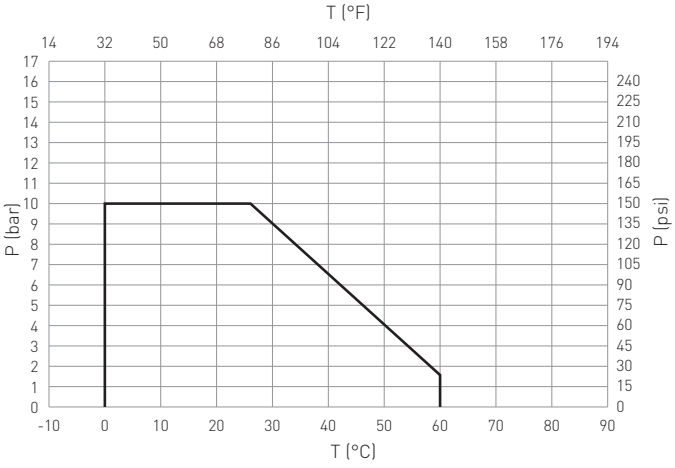

CPVC

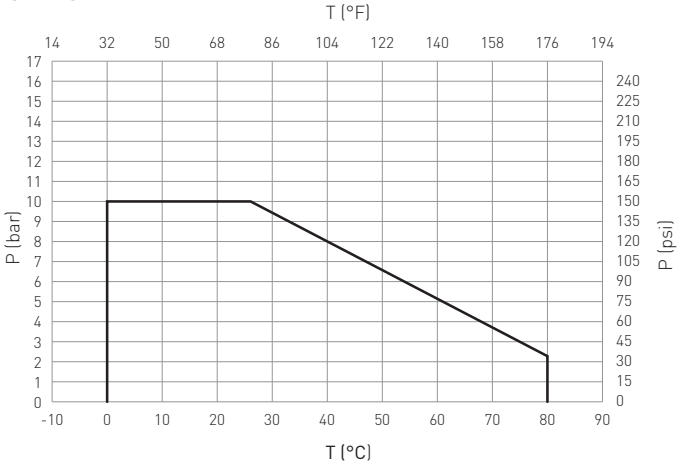

PP

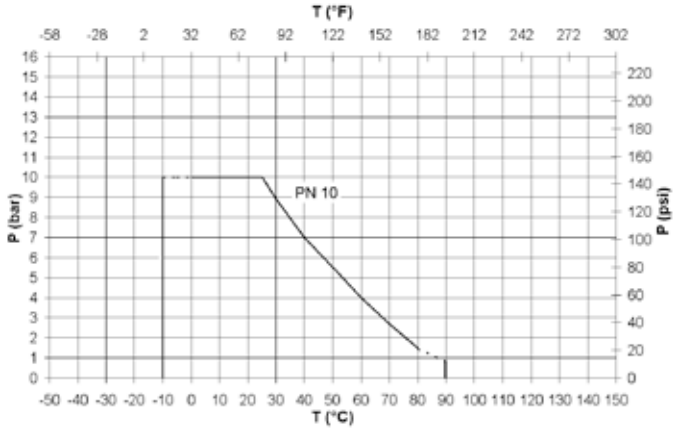

PVDF

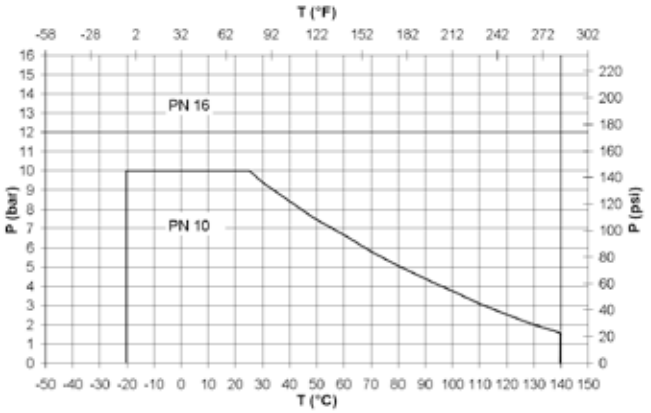

Operating Torque

Average values at nominal pressure

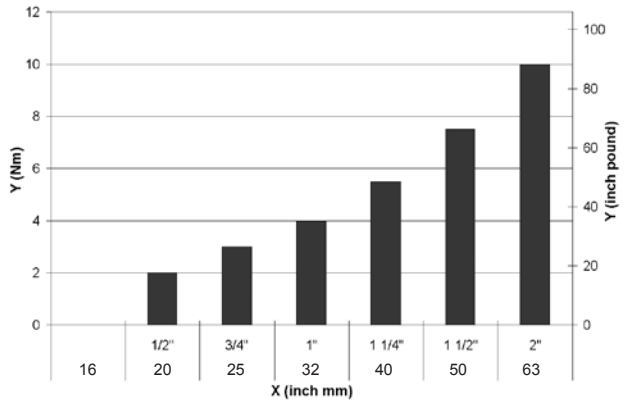

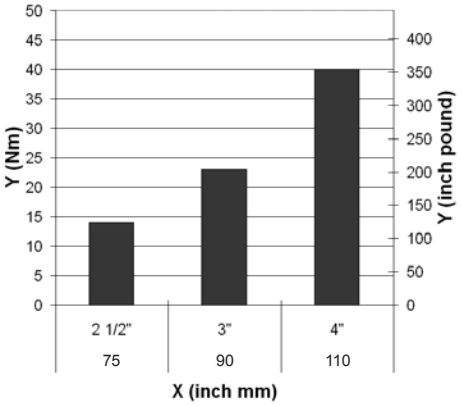

X Size (mm, inch)

Y Torque (Nm, inch pound)

Pressure loss

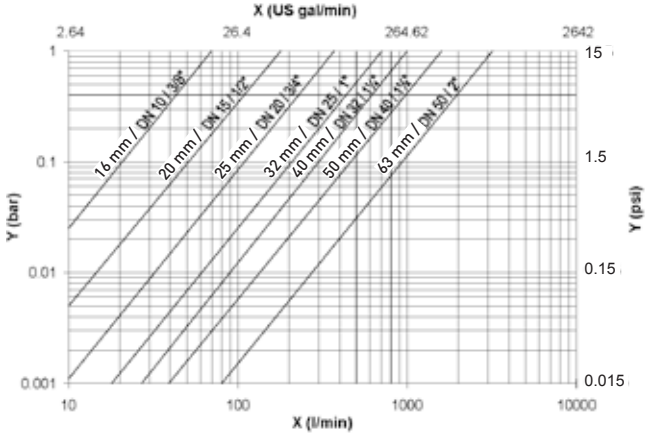

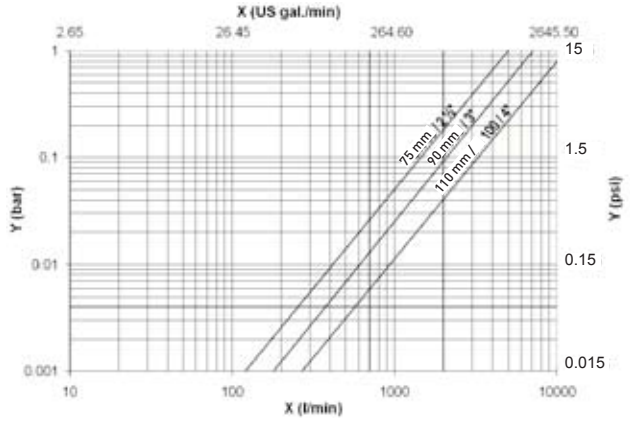

Medium: water, 20°C

X Flow rate (l/min / U.S. gal/min)

Y Pressure loss Δp (bar / psi)

PVC/CPVC
Type 233 Pneumatically Actuated Ball Valve

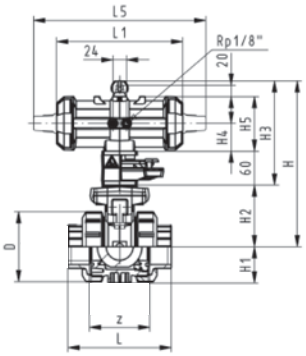

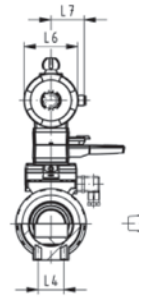

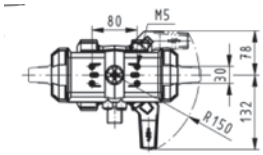

With manual override

With solvent cement sockets/threaded NPT

Inch	Cv-value [gal/min]	psi		D [mm]	H [mm]	H1 [mm]	H2 [mm]	H3 [mm]	H4 [mm]
		socket	NPT						
3/8	4.9	150	150	50	230	27	62	168	40
½	12.9	150	150	50	230	27	62	168	40
¾	24.5	150	150	58	239	30	71	168	40
1	49.0	150	150	68	239	36	71	168	40
1¼	70.0	150	150	84	271	44	84	187	51
1½	112.0	150	150	97	271	51	84	187	51
2	217.1	150	150	124	293	64	106	187	51

H5 [mm]	L (mm)		L1 [mm]	L4 [mm]	L5 [mm]	L6 [mm]	L7 [mm]	L8 [mm]	z [mm]
	Sockets	NPT							
97	105	98	194	25	261	76	48	76	64
97	105	98	194	25	261	76	48	76	64
97	121	111	194	25	261	76	48	76	72
97	133	127	194	25	261	76	48	76	79
115	154	147	224	45	305	95	59	95	94
115	164	157	224	45	305	95	59	95	95
115	183	183	224	45	305	95	59	95	107

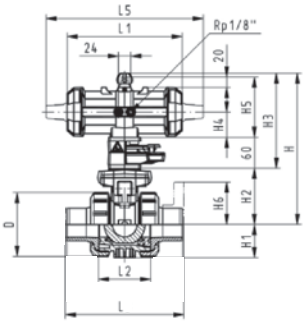

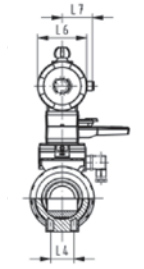

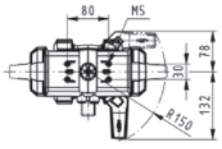

With flanges, ANSI

Inch	psi	Cv-value [gal/min]	D [mm]	H [mm]	H1 [mm]	H2 [mm]	H3 [mm]	H5 [mm]	L [mm]
½	150	12.9	50	230	27	62	168	97	149
¾	150	24.5	58	239	30	71	168	97	165
1	150	49.0	68	239	36	71	168	97	184
1¼	150	70.0	84	271	44	84	187	115	206
1½	150	112.0	97	271	51	84	187	115	221
2	150	217.0	124	293	64	106	187	115	251

L1 [mm]	L2 [mm]	L4 [mm]	L5 [mm]	L6 [mm]	L7 [mm]
194	56	25	261	76	48
194	65	25	261	76	48
194	71	25	261	76	48
224	85	45	305	95	59
224	89	45	305	95	59
224	101	45	305	95	59

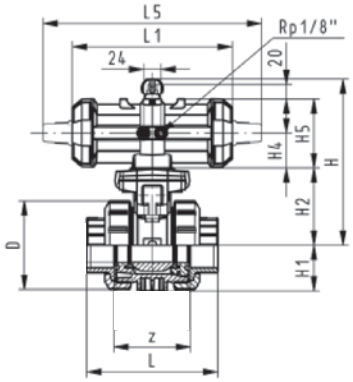

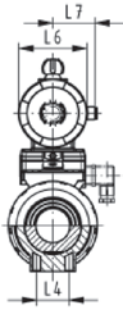

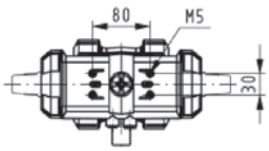

Without manual override

With solvent cement sockets/threaded NPT

Inch	Cv-value [gal/min]	psi		D [mm]	H [mm]	H1 [mm]	H2 [mm]	H4 [mm]	H5 [mm]
		Socket	NPT						
3/8	4.9	150	150	50	167	27	62	40	97
½	12.9	150	150	50	167	27	62	40	97
¾	24.5	150	150	58	176	30	71	40	97
1	49.0	150	150	68	176	36	71	40	97
1¼	70.0	150	150	84	210	44	84	51	115
1½	112.0	150	150	97	210	51	84	51	115
2	217.0	150	150	124	232	64	106	51	115
2½	350.0	150	150	166	262	85	156		70
3	490.0	150	150	200	281	105	168		78
4	770.0	150	150	238	292	123	175		86

L [mm]		L1 [mm]	L4 [mm]	L5 [mm]	L6 [mm]	L7 [mm]	z [mm]
Socket	NPT						
105	98	194	25	261	76	48	64
105	98	194	25	261	76	48	64
121	111	194	25	261	76	48	72
133	127	194	25	261	76	48	79
154	147	224	45	305	95	59	94
164	157	224	45	305	95	59	95
183	183	224	45	305	95	59	107
233	234	218	70	276	65		144
254	255	259	70	341	72		151
301	302	287	120	369	80		174

Without manual override

With flanges, ANSI

Inch	Cv-value [gal/min]	psi	D [mm]	H [mm]	H1 [mm]	H2 [mm]	H4 [mm]	H5 [mm]
½	12.9	150	50	167	27	62	40	97
¾	24.5	150	58	176	30	71	40	97
1	49.0	150	68	176	36	71	40	97
1¼	70.0	150	84	210	44	84	51	115
1½	112.0	150	97	210	51	84	51	115
2	217.0	150	124	232	64	106	51	115
2½	350.0	150	166	262	85	156		70
3	490.0	150	200	281	105	168		78
4	770.0	150	238	292	123	175		86

L [mm]	L1 [mm]	L2 [mm]	L4 [mm]	L5 [mm]	L6 [mm]	L7 [mm]	z [mm]
149	194	56	25	261	76	48	60
165	194	65	25	261	76	48	60
184	194	71	25	261	76	48	69
206	224	85	45	305	95	59	75
221	224	89	45	305	95	59	89
251	224	101	45	305	95	59	110
311	218	136	70	276	65		144
343	259	141	70	341	72		151
397	287	164	120	369	80		174

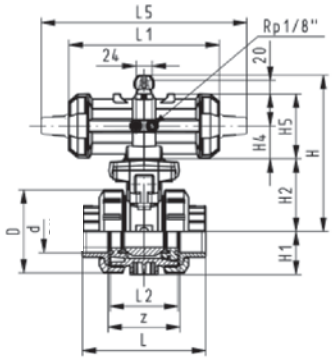

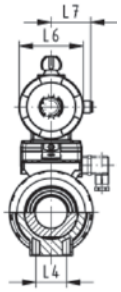

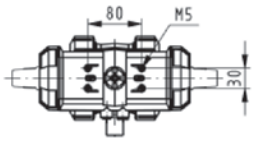

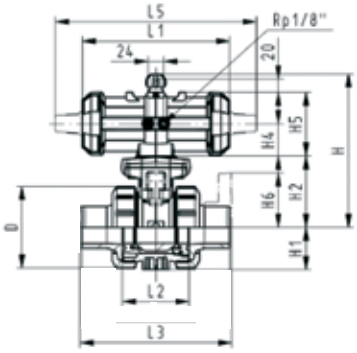

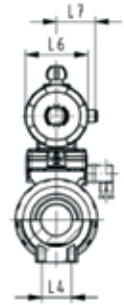

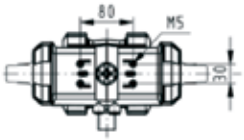

PROGEF® Standard Polypropylene Type 231 Pneumatically Actuated Ball Valve

Without manual override

With fusion sockets metric

d	Cv-value [gal/min]	psi	D [mm]	H [mm]	H1 [mm]	H2 [mm]	H4 [mm]	H5 [mm]	L [mm]
16	4.9	150	50	167	27	62	40	97	93
20	12.9	150	50	167	27	62	40	97	95
25	24.5	150	58	176	30	71	40	97	108
32	49.0	150	68	176	36	71	40	97	118
40	70.0	150	84	210	44	84	51	115	137
50	112.0	150	97	210	51	84	51	115	147
63	217.0	150	124	232	64	106	51	115	168
75	350.00	150	166	262	85	156		70	233
90	490.00	150	200	281	105	168		78	254
110	770.00	150	238	292	123	175		86	301

L1 [mm]	L4 [mm]	L5 [mm]	L6 [mm]	L7 [mm]	z [mm]
194	25	261	76	48	67
194	25	261	76	48	66
194	25	261	76	48	77
194	25	261	76	48	83
224	45	305	95	59	99
224	45	305	95	59	105
224	45	305	95	59	117
218	70	276	65		167
259	70	341	72		180
287	120	369	80		215

With flanges ANSI

Inch	Cv-value [gal/min]	psi	D [mm]	H [mm]	H1 [mm]	H2 [mm]	H4 [mm]	H5 [mm]	L [mm]
½	12.9	150	50	167	27	62	40	97	149
¾	24.5	150	58	176	30	71	40	97	165
1	49.0	150	68	176	36	71	40	97	184
1¼	70.0	150	84	210	44	84	51	115	206
1½	112.0	150	97	210	51	84	51	115	221
2	217.0	150	124	232	64	106	51	115	251
2½	350.0	150	166	262	85	156		70	311
3	490.0	150	200	281	105	168		78	343
4	770.0	150	238	292	123	175		86	397

L2 [mm]	L4 [mm]	L5 [mm]	L6 [mm]	L7 [mm]
56	25	261	76	48
65	25	261	76	48
71	25	261	76	48
85	45	305	95	59
89	45	305	95	59
101	45	305	95	59
136	70	276	65	
141	70	341	72	
164	120	369	80	

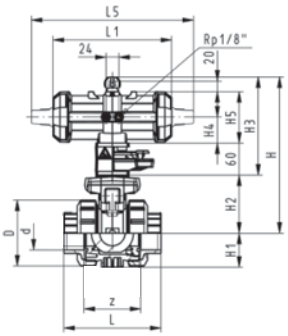

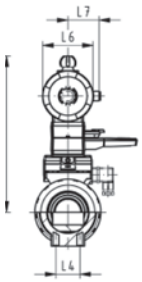

With manual override

With fusion sockets metric

d	Cv-value [gal/min]	psi	D [mm]	H [mm]	H1 [mm]	H2 [mm]	H3 [mm]	H4 [mm]	H5 [mm]
20	12.9	150	50	230	27	62	168	40	97
25	24.5	150	58	239	30	71	168	40	97
32	49.0	150	68	239	36	71	168	40	97
40	70.0	150	84	271	44	84	187	51	115
50	112.0	150	97	271	51	84	187	51	115
63	217.0	150	124	293	64	106	187	51	115

L [mm]	L1 [mm]	L4 [mm]	L5 [mm]	L6 [mm]	L7 [mm]	z [mm]
95	194	25	261	76	48	66
108	194	25	261	76	48	77
118	194	25	261	76	48	83
137	224	45	305	95	59	99
147	224	45	305	95	59	105
168	224	45	305	95	59	117

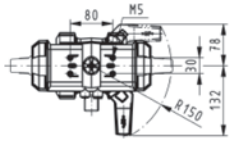

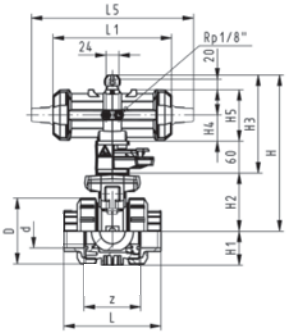

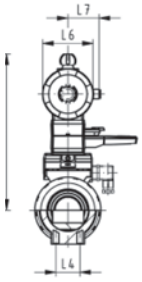

With threaded NPT

inch	Cv-value [gal/min]	psi	D [mm]	H [mm]	H1 [mm]	H2 [mm]	H3 [mm]	H4 [mm]	H5 [mm]
3/8	4.9	150	50	230	27	62	168	40	97
½	12.9	150	50	230	27	62	168	40	97
¼	24.5	150	58	239	30	71	168	40	97
1	49.0	150	68	239	36	71	168	40	97
1¼	70.0	150	84	271	44	84	187	51	115
1½	112.0	150	97	271	51	84	187	51	115
2	217.0	150	124	293	64	106	187	51	115

L [mm]	L1 [mm]	L4 [mm]	L5 [mm]	L6 [mm]	L7 [mm]	z [mm]
93	194	25	261	76	48	67
99	194	25	261	76	48	64
111	194	25	261	76	48	76
127	194	25	261	76	48	83
146	224	45	305	95	59	100
157	224	45	305	95	59	111
183	224	45	305	95	59	134

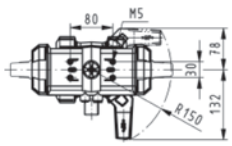

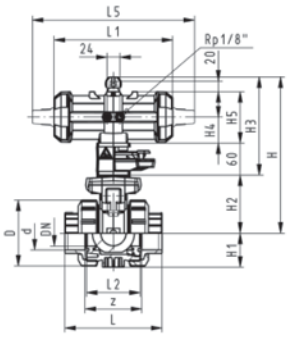

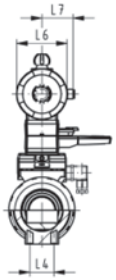

With flanges ANSI

d	Cv-value [gal/min]	psi	D [mm]	H [mm]	H1 [mm]	H2 [mm]	H3 [mm]	H4 [mm]	H5 [mm]
½	12.9	150	50	230	27	62	168	40	97
¾	24.5	150	58	239	30	71	168	40	97
1	49.0	150	68	239	36	71	168	40	97
1¼	70.0	150	84	271	44	84	187	51	115
1½	112.0	150	97	271	51	84	187	51	115
2	217.0	150	124	293	64	106	187	51	115

L [mm]	L1 [mm]	L2 [mm]	L3 [mm]	L4 [mm]	L5 [mm]	L6 [mm]	L7 [mm]
166	194	56	130	25	261	76	48
177	194	65	150	25	261	76	48
191	194	71	160	25	261	76	48
209	224	85	180	45	305	95	59
229	224	89	200	45	305	95	59
253	224	101	230	45	305	95	59

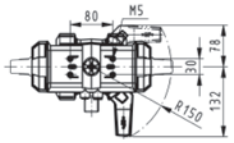

With threaded NPT

inch	Cv-value [gal/min]	psi	D [mm]	H [mm]	H1 [mm]	H2 [mm]	H4 [mm]	H5 [mm]
3/8	4.9	150	50	167	27	62	40	97
½	12.9	150	50	167	27	62	40	97
¼	24.5	150	58	176	30	71	40	97
1	49.0	150	68	176	36	71	40	97
1¼	70.0	150	84	210	44	84	51	115
1½	112.0	150	97	210	51	84	51	115
2	217.0	150	124	232	64	106	51	115

L [mm]	L1 [mm]	L4 [mm]	L5 [mm]	L6 [mm]	L7 [mm]	z [mm]
96	194	25	261	76	48	67
99	194	25	261	76	48	66
111	194	25	261	76	48	77
127	194	25	261	76	48	83
146	224	45	305	95	59	99
157	224	45	305	95	59	105
183	224	45	305	95	59	117

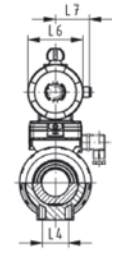

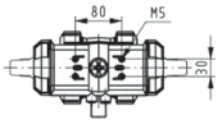

With flanges ANSI

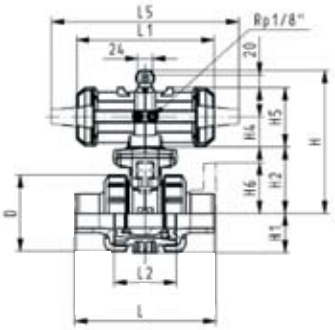



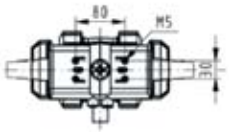

d	Cv-value [gal/min]	psi	D [mm]	H [mm]	H1 [mm]	H2 [mm]	H4 [mm]	H5 [mm]	H5 [mm]
½	12.9	150	50	167	27	62	40	97	48
¾	24.5	150	58	176	30	71	40	97	53
1	49.0	150	68	176	36	71	40	97	58
1¼	70.0	150	84	210	44	84	51	115	70
1½	112.0	150	97	210	51	84	51	115	75
2	217.0	150	124	232	64	106	51	115	83

L [mm]	L1 [mm]	L2 [mm]	L4 [mm]	L5 [mm]	L6 [mm]	L7 [mm]
166	194	56	25	261	76	48
177	194	65	25	261	76	48
191	194	71	25	261	76	48
209	224	85	45	305	95	59
229	224	89	45	305	95	59
253	224	101	45	305	95	59

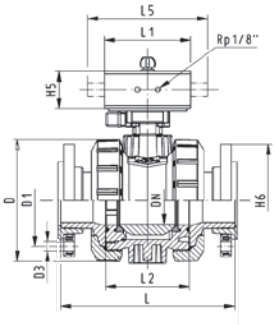

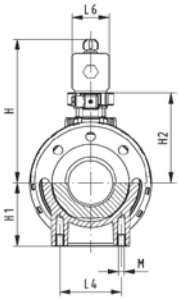

d	Cv-value [gal/min]	psi	D [mm]	H [mm]	H1 [mm]	H2 [mm]	H5 [mm]	H6 [mm]	L [mm]
2½	350	150	166	262	85	156	70	93	416
3	490	150	200	281	105	168	78	100	414
4	770	150	238	292	123	178	86	115	451

L1 [mm]	L2 [mm]	L4 [mm]	L5 [mm]	L6 [mm]
218	136	70	276	65
259	141	70	341	72
287	164	120	369	80

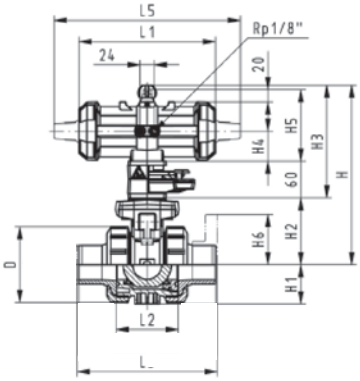

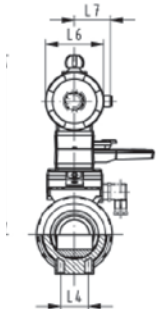

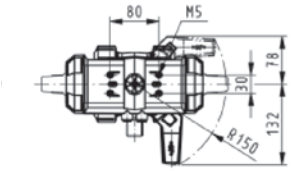

SYGEF® Standard PVDF
Type 232 Pneumatically Actuated Ball Valve

With manual override
With butt fusion spigots

Inch	Cv-value [gal/min]	psi	D [mm]	H [mm]	H1 [mm]	H2 [mm]	H4 [mm]	H5 [mm]	L [mm]
20	12.9	150	50	167	27	62	40	97	95
25	24.5	150	58	176	30	71	40	97	110
32	49.0	150	68	176	36	71	40	97	123
40	70.0	150	84	210	44	84	51	115	146
50	112.0	150	97	210	51	84	51	115	157
63	217.0	150	124	232	64	106	51	115	183

L1 [mm]	L2 [mm]	L4 [mm]	L5 [mm]	L6 [mm]	L7 [mm]
194	56	25	261	76	48
194	65	25	261	76	48
194	71	25	261	76	48
224	85	45	305	95	59
224	89	45	305	95	59
224	101	45	305	95	59

With fusion sockets metric

Inch	Cv-value [gal/min]	psi	D [mm]	H [mm]	H1 [mm]	H2 [mm]	H4 [mm]	H5 [mm]	L [mm]
16	4.9	150	50	230	27	62	40	97	92
20	12.9	150	50	230	27	62	40	97	95
25	24.5	150	58	239	30	71	40	97	110
32	49.0	150	68	239	36	71	40	97	123
40	70.0	150	84	271	44	84	51	115	146
50	112.0	150	97	271	51	84	51	115	157
63	217.0	150	124	293	64	106	51	115	183

L1 [mm]	L4 [mm]	L5 [mm]	L6 [mm]	L7 [mm]	z [mm]
194	25	261	76	48	64
194	25	261	76	48	64
194	25	261	76	48	72
194	25	261	76	48	79
224	45	305	95	59	94
224	45	305	95	59	95
224	45	305	95	59	107

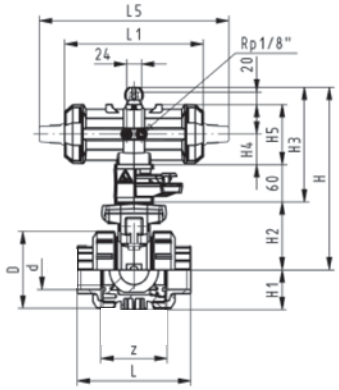

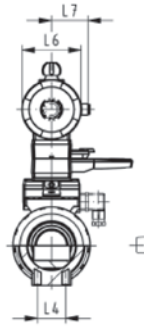

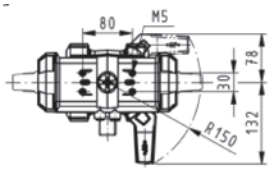

With threaded NPT

Inch	Cv-value [gal/min]	psi	D [mm]	H [mm]	H1 [mm]	H2 [mm]	H3 [mm]	H4 [mm]	H5 [mm]
16	4.9	150	50	230	27	62	168	40	97
20	12.9	150	50	230	27	62	168	40	97
25	24.5	150	58	239	30	71	168	40	97
32	49.0	150	68	239	36	71	168	40	97
40	70.0	150	84	271	44	84	187	51	115
50	112.0	150	97	271	51	84	187	51	115
63	217.0	150	124	293	64	106	187	51	115

L [mm]	L1 [mm]	L4 [mm]	L5 [mm]	L6 [mm]	L7 [mm]	z [mm]
96	194	25	261	76	48	69
99	194	25	261	76	48	64
111	194	25	261	76	48	76
127	194	25	261	76	48	83
146	224	45	305	95	59	101
157	224	45	305	95	59	111
183	224	45	305	95	59	135

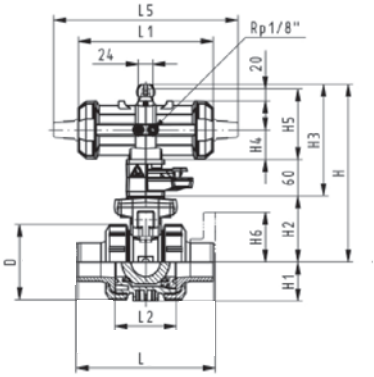

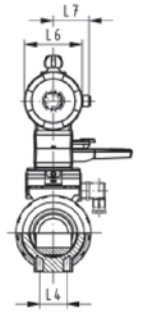

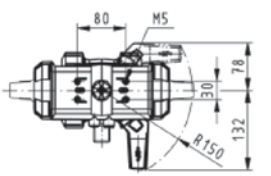

With flanges ANSI

Inch	Cv-value [gal/min]	psi	D [mm]	H [mm]	H1 [mm]	H2 [mm]	H3 [mm]	H4 [mm]	H5 [mm]
½	12.9	150	50	230	27	62	168	40	97
¾	24.5	150	58	239	30	71	168	40	97
1	49.0	150	68	239	36	71	168	40	97
1¼	70.0	150	84	271	44	84	187	51	115
1½	112.0	150	97	271	51	84	187	51	115
2	217.0	150	124	293	64	106	187	51	115

H6 [mm]	L [mm]	L1 [mm]	L2 [mm]	L4 [mm]	L5 [mm]	L6 [mm]	L7 [mm]
48	174	194	56	25	261	76	48
53	189	194	65	25	261	76	48
58	199	194	71	25	261	76	48
70	235	224	85	45	305	95	59
75	243	224	89	45	305	95	59
83	261	224	101	45	305	95	59

Without manual override
With butt fusion spigots

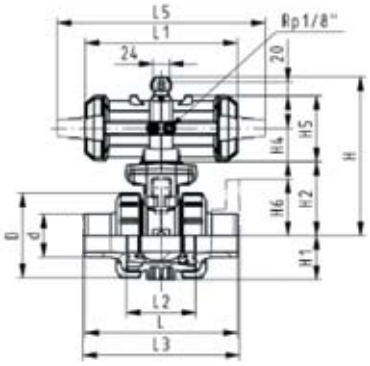

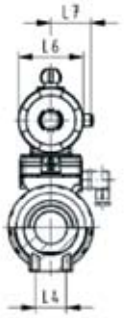

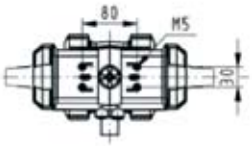

Inch	Cv-value [gal/min]	psi	D [mm]	H [mm]	H1 [mm]	H2 [mm]	H4 [mm]	H5 [mm]
20	12.9	150	50	167	27	62	40	97
25	24.5	150	58	176	30	71	40	97
32	49.0	150	68	176	36	71	40	97
40	70.0	150	84	210	44	84	51	115
50	112.0	150	97	210	51	84	51	115
63	217.0	150	124	232	64	106	51	115

L [mm]	L1 [mm]	L2 [mm]	L4 [mm]	L5 [mm]	L6 [mm]	L7 [mm]
174	194	56	25	261	76	48
189	194	65	25	261	76	48
199	194	71	25	261	76	48
235	224	85	45	305	95	59
243	224	89	45	305	95	59
261	224	101	45	305	95	59

With fusion sockets metric

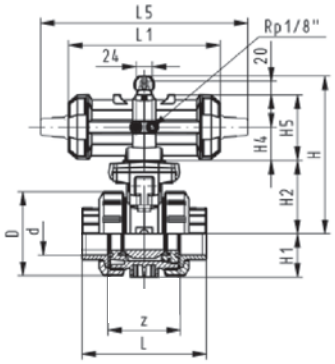

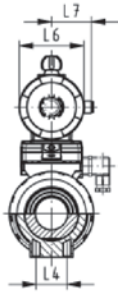

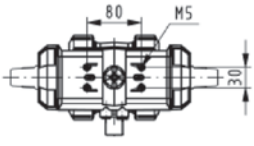

Inch	Cv-value [gal/min]	psi	D [mm]	H [mm]	H1 [mm]	H2 [mm]	H4 [mm]	H5 [mm]
16	4.9	150	50	167	27	62	40	97
20	12.9	150	50	167	27	62	40	97
25	24.5	150	58	176	30	71	40	97
32	49.0	150	68	176	36	71	40	97
40	70.0	150	84	210	44	84	51	115
50	112.0	150	97	210	51	84	51	115
63	217.0	150	124	232	64	106	51	115

L [mm]	L1 [mm]	L4 [mm]	L5 [mm]	L6 [mm]	L7 [mm]	z [mm]
92	194	25	261	76	48	64
95	194	25	261	76	48	64
110	194	25	261	76	48	72
123	194	25	261	76	48	79
164	224	45	305	95	59	94
157	224	45	305	95	59	95
183	224	45	305	95	59	107

With threaded NPT

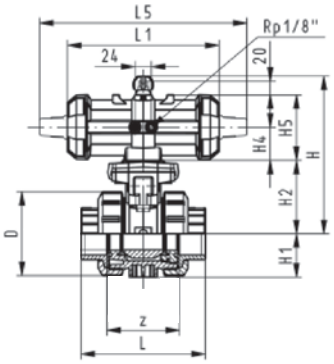

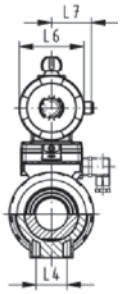

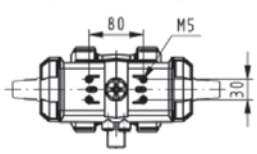

Inch	Cv-value [gal/min]	psi	D [mm]	H [mm]	H1 [mm]	H2 [mm]	H4 [mm]	H5 [mm]
3/8	4.9	150	50	167	27	62	40	97
½	12.9	150	50	167	27	62	40	97
¾	24.5	150	58	176	30	71	40	97
1	49.0	150	68	176	36	71	40	97
1¼	70.0	150	84	210	44	84	51	115
1½	112.0	150	97	210	51	84	51	115
2	217.0	150	124	232	64	106	51	115

L [mm]	L1 [mm]	L4 [mm]	L5 [mm]	L6 [mm]	L7 [mm]	z [mm]
96	194	25	261	76	48	64
99	194	25	261	76	48	64
111	194	25	261	76	48	72
127	194	25	261	76	48	79
146	224	45	305	95	59	94
157	224	45	305	95	59	95
183	224	45	305	95	59	107

With flanges ANSI

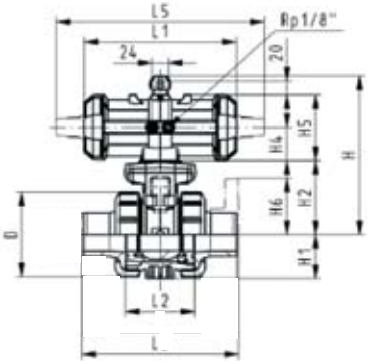

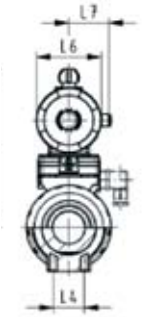

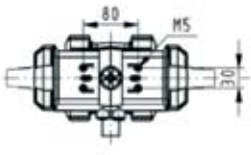

Inch	Cv-value [gal/min]	psi	D [mm]	H [mm]	H1 [mm]	H2 [mm]	H4 [mm]	H5 [mm]
½	12.9	150	50	167	27	62	40	97
¾	24.5	150	58	176	30	71	40	97
1	49.0	150	68	176	36	71	40	97
1¼	70.0	150	84	210	44	84	51	115
1½	112.0	150	97	210	51	84	51	115
2	217.0	150	124	232	64	106	51	115

L [mm]	L1 [mm]	L4 [mm]	L5 [mm]	L6 [mm]	L7 [mm]
174	194	25	261	76	48
189	194	25	261	76	48
199	1194	25	261	76	48
235	224	45	305	95	59
243	224	45	305	95	59
261	224	45	305	95	59

GF Piping Systems → worldwide at home

Our sales companies and representatives
ensure local customer support in over 100 countries.

www.piping.georgfischer.com



The technical data is not binding. They neither constitute expressly warranted characteristics nor guaranteed properties nor a guaranteed durability. They are subject to modification. Our General Terms of Sale apply.

Adding Quality to People's Lives

Australia
George Fischer Pty Ltd
Riverwood NSW 2210 Australia
Phone +61(0)2 9502 8000
australia.ps@georgfischer.com
www.georgefischer.com.au

Austria
Georg Fischer
Rohrleitungssysteme GmbH
3130 Herzogenburg
Phone +43(0)2782 856 43-0
austria.ps@georgfischer.com
www.georgfischer.at

Belgium / Luxembourg
Georg Fischer NV/SA
1070 Bruxelles/Brüssel
Phone +32(0)2 556 40 20
be.ps@georgfischer.com
www.georgfischer.be

Brazil
George Fischer Ltda
04795-100 São Paulo
Phone +55(0)11 5687 1311
br.ps@georgfischer.com

Canada
Georg Fischer Piping Systems Ltd
Brampton, ON L6T 4E3
Phone +(905) 792-8005
ca.ps@georgfischer.com
www.gfpiping.ca

China
Georg Fischer
Piping Systems Ltd Shanghai
Pudong, Shanghai 201319
Phone +86(0)21 58 13 33 33
china.ps@georgfischer.com
www.cn.piping.georgfischer.com

Denmark / Iceland
Georg Fischer A/S
2630 Taastrup
Phone +45 (0)70 22 19 75
info.dk.ps@georgfischer.com
www.georgfischer.dk

France
Georg Fischer SAS
95932 Roissy Charles de Gaulle Cedex
Phone +33(0)1 41 84 68 84
fr.ps@georgfischer.com
www.georgefischer.fr

Germany
Georg Fischer GmbH
73095 Albershausen
Phone +49(0)7161 302-0
info.de.ps@georgfischer.com
www.georgfischer.de

India
Georg Fischer Piping Systems Ltd
400 076 Mumbai
Phone +91 224007 2001
in.ps@georgfischer.com
www.georgfischer.in

Italy
Georg Fischer S.p.A.
20063 Cernusco S/N (MI)
Phone +3902 921 861
it.ps@georgfischer.com
www.georgfischer.it

Japan
Georg Fischer Ltd
556-0011 Osaka,
Phone +81(0)6 6635 2691
jp.ps@georgfischer.com
www.georgfischer.jp

Korea
Georg Fischer Piping Systems
Guro-3 dong, Guro-gu, Seoul, Korea
Phone +82(0)2 2081 1450
Fax +82(0)2 2081 1453
kor.ps@georgfischer.com

Malaysia
Georg Fischer (M) Sdn. Bhd.
40460 Shah Alam, Selangor
Phone +60 (0)3 5122 5585
conne.kong@georgfischer.com

Mexico
Georg Fischer S.A. de C.V.
Apodaca, Nuevo Leon
CP66636 Mexico
Phone +52 (81)1340 8586
Fax +52 (81)1522 8906

Middle East
George Fischer Piping Systems
Dubai, United Arab Emirates
Phone +971 4 289 49 60
info.export@georgfischer.com
www.export.georgfischer.com

Netherlands
Georg Fischer N.V.
8161 PA Epe
Phone +31(0)578 678 222
nl.ps@georgfischer.com
www.georgfischer.nl

Norway
Georg Fischer AS
1351 Rud
Phone +47(0)67 18 29 00
no.ps@georgfischer.com
www.georgfischer.no

Poland
Georg Fischer Sp. z o.o.
02-226 Warszawa
Phone +48(0)22 313 10 50
poland.ps@georgfischer.com
www.georgfischer.pl

Romania
Georg Fischer
Piping Systems Ltd
020257 Bucharest - Sector 2
Phone +40(0)21 230 53 80
ro.ps@georgfischer.com
www.export.georgfischer.com

Russia
Georg Fischer Piping Systems
Moscow 125047
Tel. +7 495 258 60 80
ru.ps@georgfischer.com
www.georgfischer.ru

Singapore
George Fischer Pte Ltd
528 872 Singapore
Phone +65(0)67 47 06 11
sgp.ps@georgfischer.com
www.georgefischer.com.sg

Spain / Portugal
Georg Fischer S.A.
28046 Madrid
Phone +34(0)91 781 98 90
es.ps@georgfischer.com
www.georgfischer.es

Sweden / Finland
Georg Fischer AB
12523 Älvsjö-Stockholm
Phone +46(0)8 506 775 00
info.se.ps@georgfischer.com
www.georgfischer.se

Switzerland
Georg Fischer
Rohrleitungssysteme (Schweiz) AG
8201 Schaffhausen
Phone +41(0)52 631 30 26
ch.ps@georgfischer.com
www.piping.georgfischer.ch

Taiwan
Georg Fischer Piping Systems
San Chung City, Taipei Hsien
Phone +886 2 8512 2822
Fax +886 2 8512 2823

United Kingdom / Ireland
George Fischer Sales Limited
Coventry, CV2 2ST
Phone +44(0)2476 535 535
uk.ps@georgfischer.com
www.georgefischer.co.uk

USA / Latin America / Caribbean
Georg Fischer LLC
Tustin, CA 92780-7258
Phone +1(714) 731 88 00
Toll Free 800 854 40 90
us.ps@georgfischer.com
www.us.piping.georgefischer.com

Item #M187 (7/08)

© 2008 Georg Fischer LLC

Printed in USA

+GF+

GEORG FISCHER
PIPING SYSTEMS

TAGS:
20-HV-201-A/B/C/D/E
16-HV-401-A/B/C
16-HV-400-A/B/C
20-HV-303-1/2/3/4
20-HV-304-1/2/3/4
20-HV-610-1/2
16-HV-405-1/2/3
16-HV-406-1/2/3



BUTTERFLY VALVES
RESILIENT SEATED

SERIES 30/31 Wafer/Lug
2”-20” (50mm-500mm)

The
High
Performance
Company

SERIES 30/31

2”-20” (50mm-500mm) Bray® Controls is proud to offer a high quality line of butterfly valves to meet the requirements of today’s market. Combining years of field experience, research and development, Bray has designed many unique features in the Series 30/31 not previously available. The results are longer service life, greater reliability, ease of parts replacement and interchangeability of components.

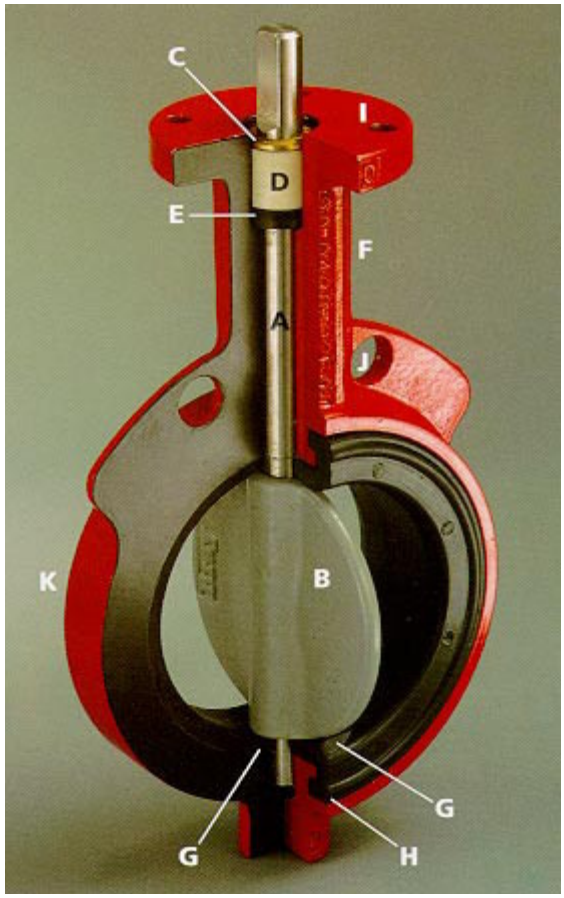

STEM SEAL (E)

Double "U" cup seal design is self-adjusting and gives positive sealing in both directions. Prevents external substances from entering stem bore.

NECK (F)

Extended neck length allows for 2" of piping insulation and is easily accessible for mounting actuators.

PRIMARY AND SECONDARY SEALS (G)

The Primary Seal is achieved by an interference fit of the molded seat flat with the disc hub. The Secondary Seal is created because the stem diameter is greater than the diameter of the seat stem hole. These seals prevent line media from coming in contact with the stem or body.

BRAY UNIQUE SEAT DESIGN (H)

One of the valve's key elements is Bray's unique "*Tongue-and-Groove*" seat design. This resilient seat features lower torque than many valves on the market today and provides complete isolation of flowing media from the body. The tongue-and-groove seat to body retention method is superior to traditional designs, making field replacement simple and fast. The seat is specifically designed to seal with slip-on or weld-neck flanges. The seat features a molded O-ring which eliminates the use of flange gaskets. An important maintenance feature is that all resilient seats for Bray butterfly valves Series 20, 21, 30, 31, 34 are completely interchangeable.

DISC AND STEM CONNECTION (A)

Features a high-strength through stem design. The close tolerance, double "D" connection that drives the valve disc is an exclusive feature of the Bray valve. It eliminates stem retention components being exposed to the line media, such as disc screws

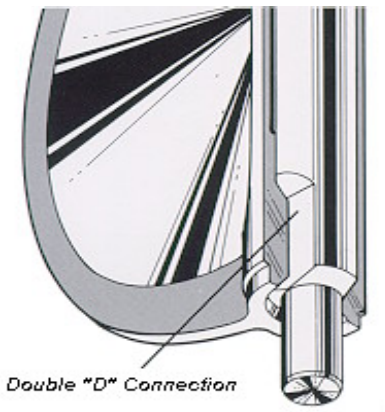

and taper pins, which commonly result in leak paths, corrosion, and vibration failures. Disc screws or taper pins, due to wear and corrosion, often require difficult machining for disassembly. Disassembly of the Bray stem is just a matter of pulling the stem out of the disc. Without fasteners obstructing the line flow, the Series 30/31 Cv values are higher than many other valves, turbulence is reduced, and pressure recovery is increased. The stem ends and top mounting flange are standardized for interchangeability with Bray actuators.

DISC (B)

Casting is spherically machined, hand polished to provide a bubble-tight shut off, minimum torque, and longer seat life. The disc O.D. clearance is designed to work with all standard piping.

"SPIROLOX*" RETAINING RING (C)

The stem is retained in the body by means of a unique Stainless Steel “Spirolox®” retaining ring, a thrust washer and two C-rings, manufactured from brass as standard, stainless steel upon request. The retaining ring may be easily removed with a standard hand tool. The stem retaining assembly prevents unintentional removal of the stem during field service.

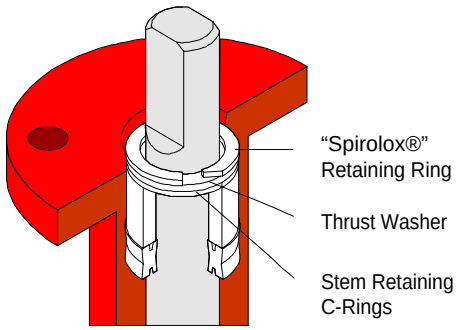

*"Spirolox®" designation is a registered trademark of TRW, Inc.

STEM BUSHING (D)

Non-Corrosive, heavy duty acetal bushing absorbs actuator side thrusts.

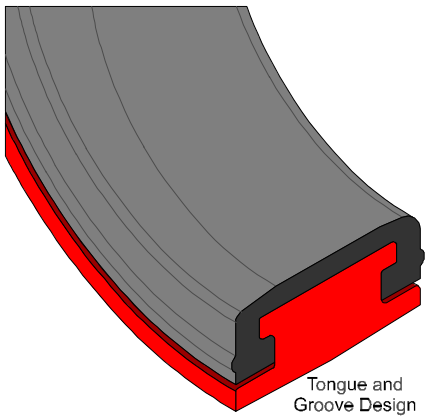

SERIES 30/31

ACTUATOR MOUNTING FLANGE AND STEM CONNECTION (I)

Universally designed to ISO 5211 for direct mounting of Bray® power actuators and manual operators.

FLANGE LOCATING HOLES (J)

Provides quick and proper alignment during installation.

BODY (K)

One-piece wafer or lug style. Epoxy coating for excellent corrosion resistance. Bray valve bodies meet ANSI 150 pressure ratings for hydrostatic shell test requirements.

DESIGN FEATURES

Bray's Series 30 valve is a wafer version with flange locating holes, and the Series 31 is the companion lug version for dead-end service and other flange requirements. All Bray valves are tested to 110% of full pressure rating before shipment.
A major design advantage of Bray valve product lines is international compatibility. The same valve is compatible with most world flange standards - ANSI Class 125/150, BS 10 Tables D&E, BS4504 NP 10/16, DIN ND10/16, AS 2129 and JIS 10. In addition, the valves are designed to comply with ISO 5752 face-to-face and ISO 5211 actuator mounting flanges. Therefore, one valve design can be used in many different world markets. Due to a modular concept of design, all Bray® handles, manual gear operators and pneumatic and electric actuators mount directly to Bray valves. No brackets or adapters are required. Bray interchangeability and compatibility offers you the best in uniformity of product line and low-cost performance in the industry today.

EPOXY COATING CORROSION PROTECTION

Bray's standard product offers valve bodies with an epoxy coating, providing excellent corrosion and wear resistance to the valve's surface. The Bray epoxy coating is a hard, high gloss red finish.

- Chemical Resistance - resists a broad range of chemicals including: dilute aqueous acids and alkalies, petroleum solvents, alcohols, greases and oils. Offers outstanding resistance to humidity and water.
- Weatherability - outdoor tested resistant to ultra-violet radiation.
- Abrasion Resistance - excellent resistance to abrasion.
- Impact Resistance - withstands impact without chipping or cracking.

NYLON 11 COATING

Optionally available for valve bodies where outstanding protection and performance is needed. A thermoplastic produced from a vegetable base, this coating is inert to fungus growth and molds. Nylon 11 is *USDA Approved*, as well as certified to ANSI/NSF 61 for water service.

- Corrosion Resistance - superior resistance to a broad range of chemical environments. Salt spray tested in excess of 2,000 hours and seawater immersion tested for over 10 years without corrosion to metal substrates. Nylon 11 features a very low coefficient of friction and excellent resistance to impact and ultra-violet radiation.



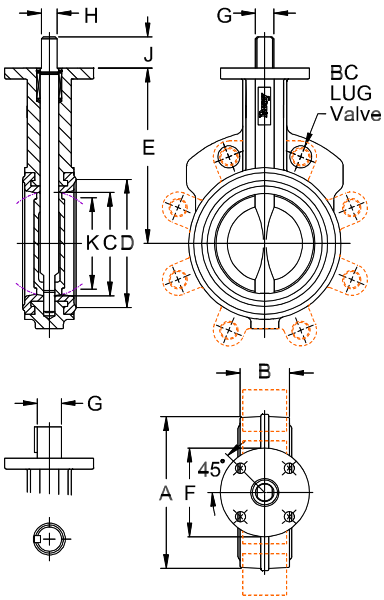

DIMENSIONS SERIES 30 WAFER

SERIES 31 LUG

Valve Size								Mtg Flange Drilling							Lug Bolting Data		
ins	mm	A	B	C	D	E	F	BC	No. Holes	Hole Dia.	G	H	J	K	BC	No. Holes	Thrds UNC-2B
2	50	3.69	1.62	2.00	2.84	5.50	3.54	2.76	4	.39	.55	.39	1.25	1.32	4.75	4	5/8-11
2½	65	4.19	1.75	2.50	3.34	6.00	3.54	2.76	4	.39	.55	.39	1.25	1.91	5.50	4	5/8-11
3	80	4.88	1.75	3.00	4.03	6.25	3.54	2.76	4	.39	.55	.39	1.25	2.55	6.00	4	5/8-11
4	100	6.06	2.00	4.00	5.16	7.00	3.54	2.76	4	.39	.63	.43	1.25	3.57	7.50	8	5/8-11
5	125	7.12	2.12	5.00	6.16	7.50	3.54	2.76	4	.39	.75	.51	1.25	4.63	8.50	8	3/4-10
6	150	8.12	2.12	5.75	7.02	8.00	3.54	2.76	4	.39	.75	.51	1.25	5.45	9.50	8	3/4-10
8	200	10.50	2.50	7.75	9.47	9.50	5.91	4.92	4	.57	.87	.63	1.25	7.45	11.75	8	3/4-10
10	250	12.75	2.50	9.75	11.47	10.75	5.91	4.92	4	.57	1.18	.87	2.00	9.53	14.25	12	7/8-9
12	300	14.88	3.00	11.75	13.47	12.25	5.91	4.92	4	.57	1.18	.87	2.00	11.47	17.00	12	7/8-9

Valve Size								Mtg Flange Drilling							Lug Bolting Data		
ins	mm	A	B	C	D	E	F	BC	No. Holes	Hole Dia.	G	H	KEY SIZE	K	BC	No. Holes	Thrds UNC-2B
14	350	17.05	3.00	13.25	15.28	13.62	5.91	4.92	4	.57	1.38	2.00	.39x.39	13.04	18.75	12	1-8
16	400	19.21	4.00	15.25	17.41	14.75	5.91	4.92	4	.57	1.38	2.00	.39x.39	14.85	21.25	16	1-8
18	450	21.12	4.25	17.25	19.47	16.00	8.27	6.50	4	.81	1.97	2.50	.39x.47	16.85	22.75	16	1⅛-7
20	500	23.25	5.00	19.25	21.59	17.25	8.27	6.50	4	.81	1.97	2.50	.39x.47	18.73	25.00	20	1⅛-7

SELECTION DATA

FLANGE REQUIREMENTS

Bray valves are designed for installation between ANSI Class 125/150 lb. weld-neck or slip-on flanges, BS 10 Tables D&E, BS 4504 NP 10/16, DIN ND 10/16, AS 2129 and JIS 10, either flat faced or raised faced. While weld-neck flanges are recommended, Bray has specifically designed its valve seat to work with slip-on flanges, thus eliminating common failures of other butterfly valve designs. When using raised face flanges be sure to properly align valve and flange. Type C stub-end flanges are not recommended.

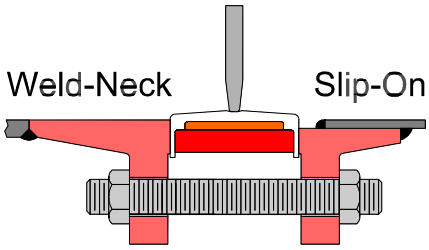

Note: Flanges on both sides of installed valve must be the same type

PRESSURE RATINGS*

For bi-directional bubble-tight shut off, disc in closed position:

Inches	mm	psig	bar
2-12	50-300	175	12
14-20	350-500	150	10

For Dead-end Service Applications: With *downstream flanges installed* or with *vulcanized seats,* the dead-end pressure ratings are equal to valve bi-directional ratings as stated above. With no downstream flanges or with seats that are not vulcanized, the dead-end pressure rating for 2"-12" valves is 75 psi (5 bar) for 14"-20" valves, 50 psi (3.5 bar.)

* Pressure Ratings are based on standard disc diameters. For low pressure application, Bray offers a standard reduced disc diameter to decrease seating torques and to extend seat life, thus increasing the valve's performance and reducing actuator costs for the customer.

VELOCITY LIMITS

For On/Off Services

Fluids - 30 ft/sec (9m/s)

Gases - 175 ft/sec (54m/s)

Cv VALUES-VALVE SIZING COEFFICIENT

Valve Size		Disc Position (degrees)								
ins	mm	90°	80°	70°	60°	50°	40°	30°	20°	10°
2	50	144	114	84	61	43	27	16	7	1
2 1/2	65	282	223	163	107	67	43	24	11	1.5
3	80	461	364	267	154	96	61	35	15	2
4	100	841	701	496	274	171	109	62	27	3
5	125	1376	1146	775	428	268	170	98	43	5
6	150	1850	1542	1025	567	354	225	129	56	6
8	200	3316	2842	1862	1081	680	421	241	102	12
10	250	5430	4525	2948	1710	1076	667	382	162	19
12	300	8077	6731	4393	2563	1594	1005	555	235	27
14	350	10538	8874	5939	3384	2149	1320	756	299	34
16	400	13966	11761	7867	4483	2847	1749	1001	397	45
18	450	17214	14496	10065	5736	3643	2237	1281	507	58
20	500	22339	18812	12535	7144	4536	2786	1595	632	72

Cv is defined as the volume of water in U.S.G.P.M. that will flow through a given restriction or valve opening with a pressure drop of one (1) p.s.i. at room temperature. Recommended control angles are between 25°-70° open. Preferred

EXPECTED SEATING/UNSEATING TORQUES (Lb.-Ins.)

		Full-Rated Pressure Valve				Reduced Disc
Valve Size		rP (PSI)				rP (PSI)
ins	mm	50	100	150	175	50
2	50	125	130	135	140	125
2 1/2	65	195	205	215	220	195
3	80	260	275	290	297	260
4	100	400	425	450	462	267
5	125	615	670	725	755	410
6	150	783	871	953	1003	537
8	200	1475	1650	1825	1915	983
10	250	2240	2520	2800	2940	1493
12	300	3420	3870	4320	4545	2280
14	350	4950	5700	6450	-	3300
16	400	6400	7700	9000	-	4267
18	450	7850	9850	11850	-	5267
20	500	10300	12900	15500	-	6867

Valve Torque Rating - Bray has classified valve torque ratings according to 3 types: non-corrosive lubricating service, general service, and severe service. Torques listed above are for general services.Consult Bray for torque information corresponding to specific application.

TO USE TORQUE CHART, NOTE THE FOLLOWING:

1) For Bray valves, Series 20, 21, 30, 31 and 34.
2) Review Technical Bulletin No. 1001, Expected Seating/Unseating Torque's, for explanation of the 3 service classes and their related seating/unseating torque values for given pressure differentials of Full-Rated and Reduced Disc Diameter valves.
3) Dynamic Torque values are not considered. See Technical Bulletin No. 1002 for evaluation of Dynamic Torque values vs. Seating/Unseating Torque values.
4) Do not apply a safety factor to above torque values when determining actuator output torque requirement.
5) For 3 way assemblies where on valve is opening and other is closing, multiply torque by 1.5 factor.

SELECTION DATA

RECOMMENDED SPECIFICATIONS FOR BRAY SERIES 30/31 SHALL BE:

• Epoxy coated, cast iron, wafer or lug bodies.
• With flange locating holes that meet ANSI 125/150 (or BS 10 tables D&E, BS 4504 NP 10/16, DIN ND 10/16, AS 2129 and JIS 10) drillings.
• Through-stem direct drive double "D" design requiring no disc screws or pins to connect stem to disc with no possible leak paths in disc/stem connection.
• Stem mechanically retained in body neck and no part of stem or body exposed to line media.
• Tongue-and-groove seat design with primary hub seal and a molded o-ring suitable for weld-neck and slip-on flanges. Seat totally encapsulates the body with no flange gaskets required.
• Spherically machined, hand polished disc edge and hub for minimum torque and maximum sealing capability.
• Equipped with non-corrosive bushing and self-adjusting stem seal.
• Bi-directional and tested to 110% of full rating.
• Bi-directional pressure ratings:
2"-12" valves: 175 PSI
14"-20" valves: 150 PSI
Lug bodies for dead end service
With downstream flanges or vulcanized seats, pressure ratings are equal to bi-directional ratings as stated above.
With no downstream flanges or non-vulcanized seats:
2"-12" valves: 75 psi.
14"-20" valves: 50 psi.
• No field adjustment necessary to maintain optimum field performance
• The valve shall be Bray Series 30 wafer / 31 lug or equal.

TEMP. RANGE OF SEATS

Type	Maximum	Minimum
EPDM	+250°F(121°C)	-40°F(-40°C)
Buna-N	+212°F(100°C)	0°F(-18°C)
FKM*	+400°F(204°C)	0°F(-18°C)

MATERIALS SELECTION

2"-20" (50mm-500mm)

BODY:
• Cast Iron ASTM A126 Class B
• Ductile Iron ASTM A536
• Cast Steel ASTM A216 WCB
• Aluminum ASTM B26

SEAT:
• Buna-N - Food Grade
• EPDM - Food Grade
• FKM*
• White Buna-N - Food Grade

STEM:
• Coated Carbon Steel
• 416 SS ASTM A582 Type 416
• 304 SS ASTM A276 Type 304
• 316 SS ASTM A276 Type 316
• Monel

DISC:
• Aluminum Bronze ASTM B148-954
• Coated Ductile Iron ASTM A536 Gr. 65-45-12
• Ductile Iron,Nylon 11 Coated, ASTM A536 Gr. 65-45-12
• Ductile Iron, Halar® Coated, ASTM A536 Gr. 65-45-12
• 316 SS ASTM A351 CF8M
• Hastelloy® C-276 ASTM B575 Alloy N10276

WEIGHTS

Valve Size		Series	Series
ins	mm	30	31
2	50	5.5	7.0
2 1/2	65	7.0	8.0
3	80	7.5	9.0
4	100	11.5	15.0
5	125	14.0	20.0
6	150	17.0	23.0
8	200	34.0	42.0
10	250	49.0	66.0
12	300	67.0	88.0
14	350	95.0	114.0
16	400	135.0	166.0
18	450	200.0	226.0
20	500	260.0	305.0

Weights are in lbs.

COMPONENTS

No.	Qty.	Description
1	1	Body
2	1	Seat
3	1	Disc
4	1	Stem
5	1	Stem Seal
6	1	Stem Bushing
7	2	Stem Retainer
8	1	Thrust Washer
9	1	Retaining Ring

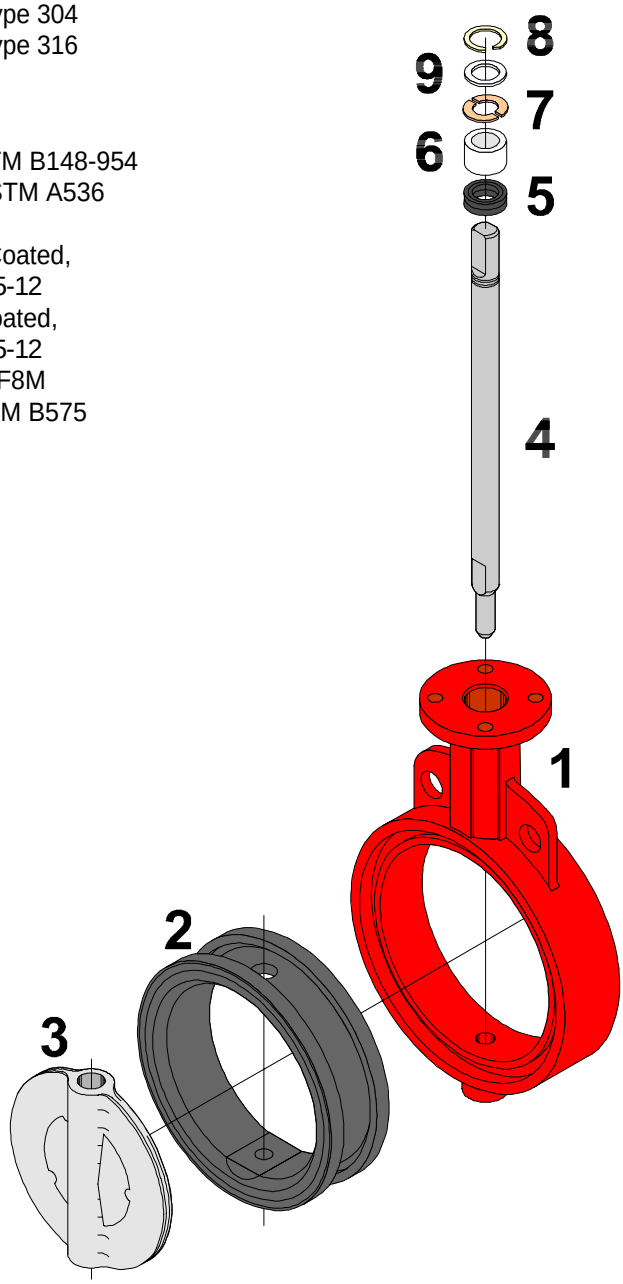

*FKM is the ASTM D1418 designation for Fluorinated Hydrocarbon Elastomers (also called Fluoroelastomers.)
Hastelloy® is a registered trademark of Haynes International, Inc.
Halar® is a registered trademark of Ausimont U.S.A., Inc.

INSTALLATION

Position the disc in the partially open position, maintaining the disc within body face-to-face. Place the body between flanges and install flange bolts. *Do not use flange gaskets.*
Before tightening flange bolts, carefully open the disc to the full open position to ensure proper alignment and clearance of the disc O.D. with the adjacent pipe I.D. Leave disc in the full open position and tighten flange bolts per required specification. Once bolts are tightened, carefully rotate disc to closed position to ensure disc O.D. clearance.

MAINTENANCE AND REPAIR

The many Bray features minimize wear and maintenance requirements. No routine lubrication is required. All components-stem, disc, seat, bushing, stem seal, etc., are field replaceable, no adjustment is needed. If components require replacement, remove the valve from the line by placing the disc near the closed position, spread the flanges, support the valve, then remove the flange bolts. No valve maintenance, including removal of manual or power actuators, should be performed until the piping system is completely depressurized.

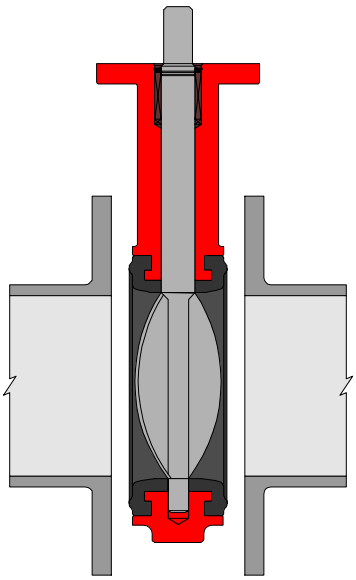

Disc in the Near Closed Position

DISASSEMBLY

Remove handle, gear operator , or actuator from actuator mounting flange. Remove “Spirolox®” retaining ring. Remove stem with its thrust washer and two C-ring stem retainers. Remove bushing and seal. Remove the disc from the seat, protecting disc edge at all times. Push the seat into an oval shape, then remove the seat from the body.

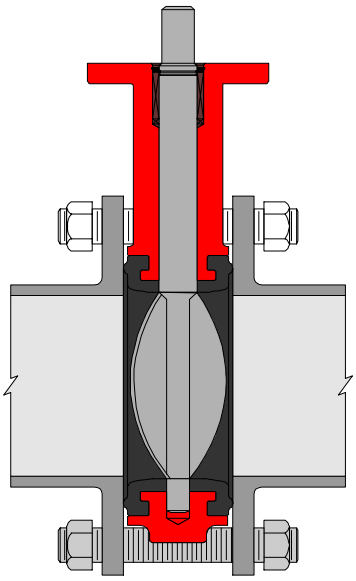

Disc in the Partially Open Position

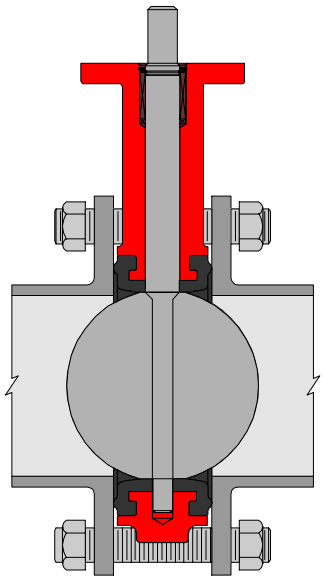

Disc in the Full Open Position

Assembly

Push the valve seat into an oval and push it into the body with seat stem holes aligned to body stem holes. Push stem into the stem hole of body. For aid in inserting disc, slightly protrude stem beyond the I.D. of the top of the seat. Install a light coating of food grade silicone oil (for silicone free applications use soap and water) on the I.D. of seat. Insert the disc into the seat by lining up the disc hole with the stem hole of the seat. Note: the broached double “D” flats in the disc must be toward the bottom of valve body. (Take special care when lining disc up with stem.) With a downward pressure and rotating the stem back and forth, push the stem until the stem touches the bottom of the body stem hole. Make certain that when pushing the stem through disc bottom, the broached flats of stem and disc are aligned. After the stem has engaged the disc, but before the stem is firmly seated in the body, replace the stem seal and bushing. Install the two C-ring stem retainers in the groove in the stem and thrust washer on top of the C-ring. Seat the stem firmly in the body and install the “Spirolox®” retaining ring back into position.

Bray CONTROLS

All statements, technical information, and recommendations in this bulletin are for general use only. Consult Bray representatives or factory for the specific requirements and material selection for your intended application. The right to change or modify product design or product without prior notice is reserved.
Patents applied for in u.S. and foreign countries.
Bray® is a registered trademark of BRAY INTERNATIONAL., Inc.

A Subsidiary of BRAY INTERNATIONAL, INC.
13333 Westland East Blvd., Houston, Texas 77041
Phone: 281. 894.5454 Fax: 281.894.9499
©1995 Bray International. All rights reserved

Bray CONTROLS CANADA CORPORATION

SERIES 30
CN–070101
Date: January 2007

Valve Size	A	B	C	D	E	F	Top Plate Drilling BC	No. of Holes	Hole Diameter	G	H	J	K	L	Adapter Code	Weight (lbs)
2"	3.69	1.62	2.00	2.84	5.50	3.54	2.76	4	.39	.55	.39	1.25	1.32	2.22	A	5.5
2.5"	4.19	1.75	2.50	3.34	6.00	3.54	2.76	4	.39	.55	.39	1.25	1.91	2.47	A	7.0
3"	4.88	1.75	3.00	4.03	6.25	3.54	2.76	4	.39	.55	.39	1.25	2.55	2.81	A	7.5
4"	6.06	2.00	4.00	5.16	7.00	3.54	2.76	4	.39	.63	.43	1.25	3.57	3.41	B	11.5
5"	7.06	2.12	5.00	6.16	7.50	3.54	2.76	4	.39	.75	.51	1.25	4.63	4.03	C	14.0
6"	8.12	2.12	5.75	7.02	8.00	3.54	2.76	4	.39	.75	.51	1.25	5.45	4.53	C	17.0
8"	10.50	2.50	7.75	9.47	9.50	5.91	4.92	4	.57	.87	.63	1.25	7.45	5.75	D	34.0
10"	12.75	2.50	9.75	11.47	10.75	5.91	4.92	4	.57	1.18	.87	2.00	9.53	7.12	E	49.0
12"	14.88	3.00	11.75	13.47	12.25	5.91	4.92	4	.57	1.18	.87	2.00	11.47	8.12	E	67.0

DRAWING NOT TO SCALE, GENERAL ARRANGEMENT DRAWING ONLY.
Note: K dim is disc chordal dimension at valve face.

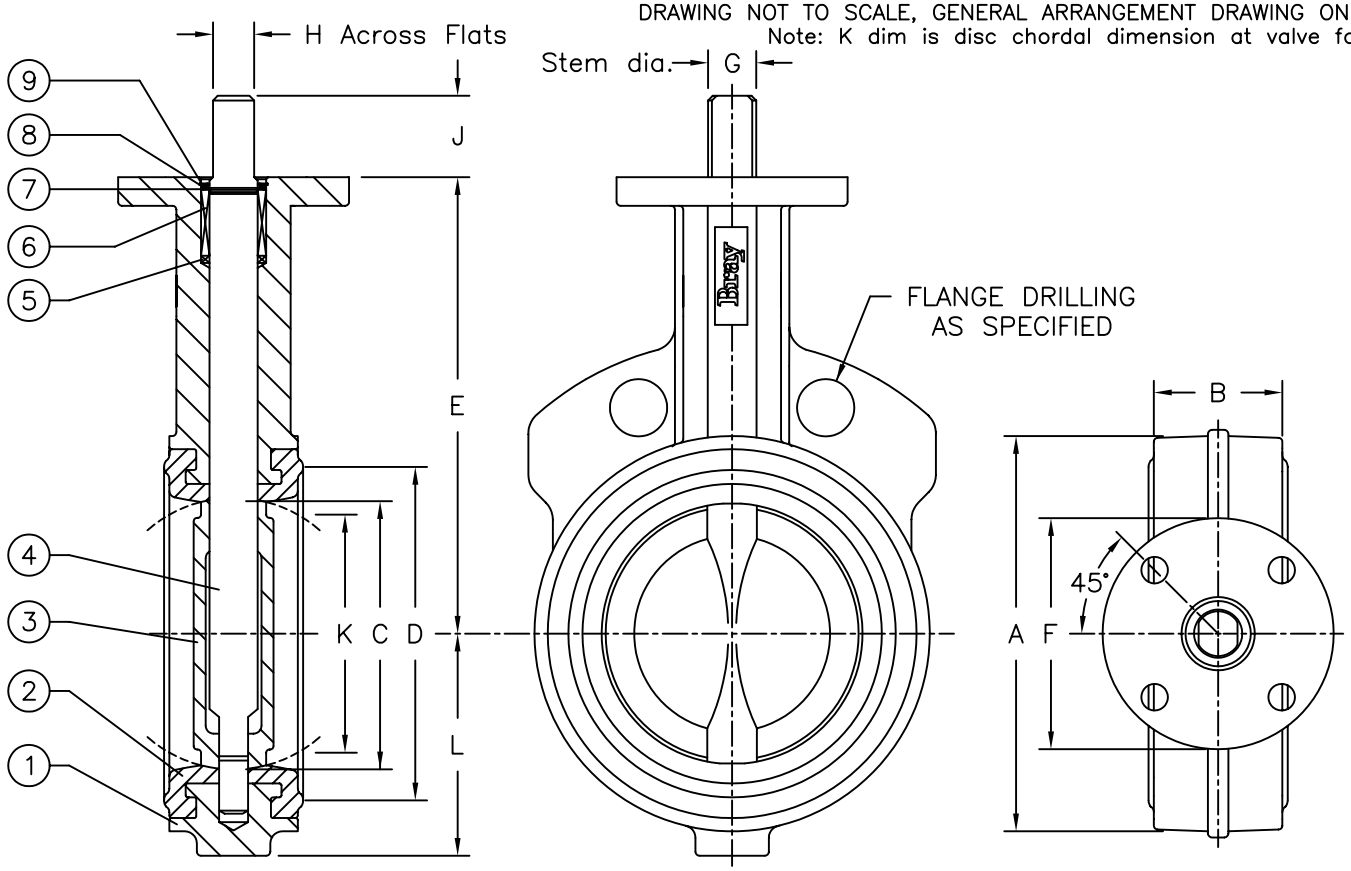

ITEM No.	NAME	No. REQUIRED	SERIES/PART No.	MATERIAL	SPECIFICATION/REMARKS
9	RETAINING RING	1		304SS	
8	THRUST WASHER	1		BRONZE	
7	STEM RETAINER	2		BRONZE	
6	BUSHING	1		ACETAL	
5	PACKING	1		BUNA–N	
4	STEM	1		416SS	ASTM A582 Type 416
3	DISC	1		316SS	ASTM A351 CF8M
2	SEAT	1		EPDM	FOOD GRADE
1	BODY	1		CAST IRON	ASTM A126 Class B

Valve Size _____ Flg. Drilling Ansi 150
Pressure Rating 175psi
Distributor _____
CUSTOMER G.E. ZENON
Project Number _____
Contractor _____
Bray Order _____
Certified Correct By S.S. Date Jan. 2007

The High Performance Company
BRAY CONTROLS CANADA
A Subsidiary of BRAY INTERNATIONAL, Inc.

PARTS LIST AND DIMENSIONS (inches)
SERIES 30 BUTTERFLY VALVE
SIZES 2" – 12"

Series	Size	Part No.	Material Trim Code	Drawing No.
30	XXXX	11010	169	CN–070101

Bray

Bray CONTROLS CANADA CORPORATION

SERIES 30
CN–070102
Date: January 2007

Valve Size	A	B	C	D	E	F	Top Plate Drilling BC	Top Plate Drilling No. of Holes	Top Plate Drilling Hole Diameter	G	J	Key Size	K	L	Adapter Code	Weight (lbs)
14"	17.05	3.00	13.25	15.28	13.62	5.91	4.92	4	.57	1.38	2.00	.39x.39	13.04	9.38	F	95
16"	19.21	4.00	15.25	17.41	14.75	5.91	4.92	4	.57	1.38	2.00	.39x.39	14.85	10.75	F	135
18"	21.12	4.25	17.25	19.47	16.00	8.27	6.50	4	.81	1.97	2.50	.47x.39	16.85	12.00	G	200
20"	23.25	5.00	19.25	21.59	17.25	8.27	6.50	4	.81	1.97	2.50	.47x.39	18.73	13.72	G	260

DRAWING NOT TO SCALE, GENERAL ARRANGEMENT DRAWING ONLY.
Note: K dim is disc chordal dimension at valve face.

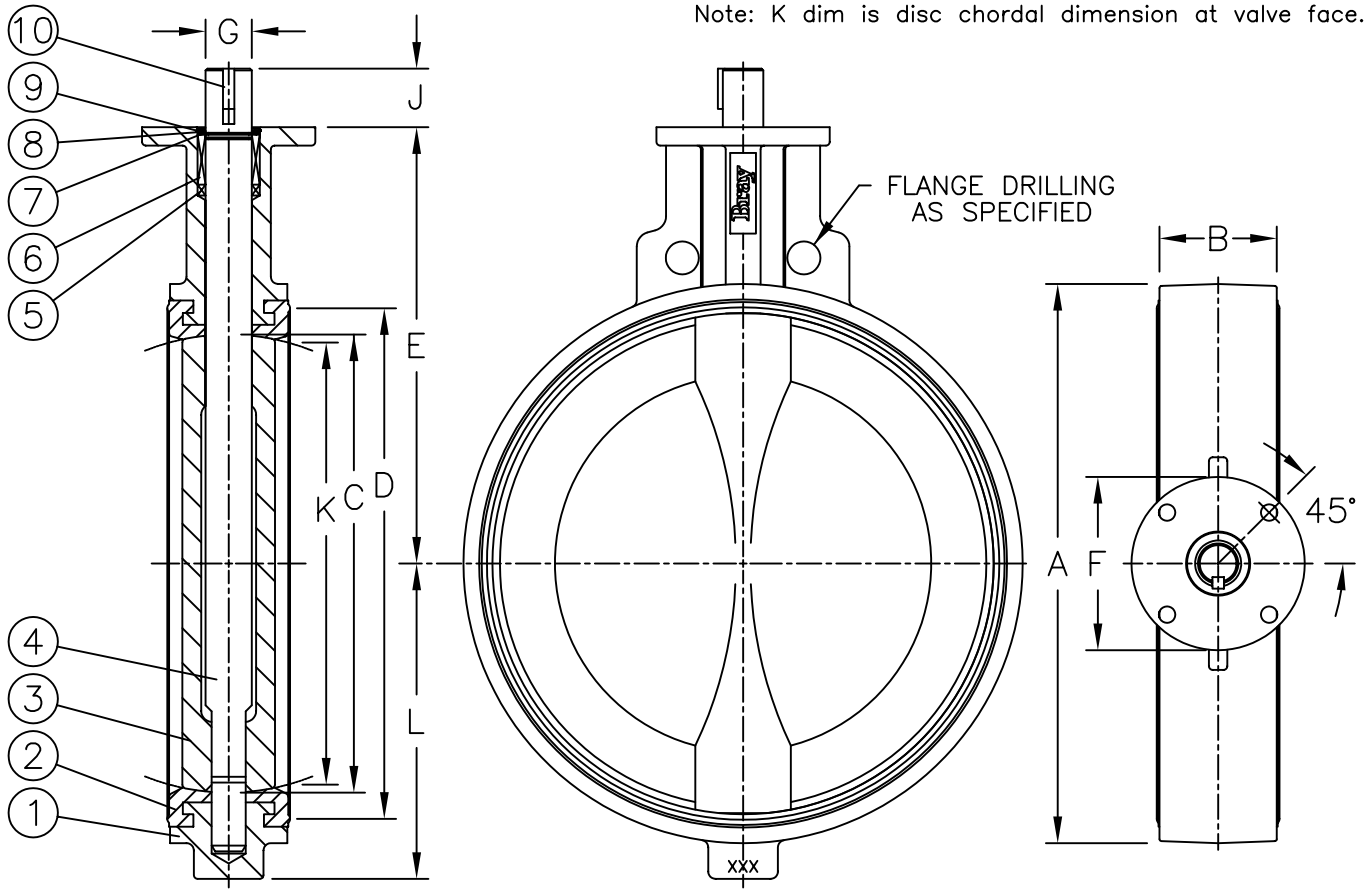

ITEM No.	NAME	No. REQUIRED	SERIES/PART No.	MATERIAL	SPECIFICATION/REMARKS
10	KEY	1		18–8SS	
9	RETAINING RING	1		304SS	
8	THRUST WASHER	1		BRONZE	
7	STEM RETAINER	2		BRONZE	
6	BUSHING	1		ACETAL	
5	PACKING	1		BUNA–N	
4	STEM	1		416SS	ASTM A582 Type 416
3	DISC	1		316SS	ASTM A351 CF8M
2	SEAT	1		EPDM	FOOD GRADE
1	BODY	1		CAST IRON	ASTM A126 Class B

Valve Size _____ Flg. Drilling Ansi 150
Pressure Rating 150psi
Distributor _____
CUSTOMER G.E. ZENON
Project Number _____
Contractor _____
Bray Order _____
Certified Correct By S.S. Date Jan. 2007

The High Performance Company

BRAY CONTROLS CANADA
A Subsidiary of BRAY INTERNATIONAL, Inc.

PARTS LIST AND DIMENSIONS
SERIES 30 BUTTERFLY VALVE
SIZES 16" thru 20"

Series	Size	Part No.	Material Trim Code	Drawing No.
30	XXXX	11010	169	CN–070102

Bray

Bray CONTROLS CANADA CORPORATION

SERIES 30
CN–070105
Date: January 2007

Valve Size	A	B	C	D	E	F	Top Plate Drilling BC	No. of Holes	Hole Diameter	G	H	J	K	L	Adapter Code	Weight (lbs)
2"	3.69	1.62	2.00	2.84	5.50	3.54	2.76	4	.39	.55	.39	1.25	1.32	2.22	A	5.5
2.5"	4.19	1.75	2.50	3.34	6.00	3.54	2.76	4	.39	.55	.39	1.25	1.91	2.47	A	7.0
3"	4.88	1.75	3.00	4.03	6.25	3.54	2.76	4	.39	.55	.39	1.25	2.55	2.81	A	7.5
4"	6.06	2.00	4.00	5.16	7.00	3.54	2.76	4	.39	.63	.43	1.25	3.57	3.41	B	11.5
5"	7.06	2.12	5.00	6.16	7.50	3.54	2.76	4	.39	.75	.51	1.25	4.63	4.03	C	14.0
6"	8.12	2.12	5.75	7.02	8.00	3.54	2.76	4	.39	.75	.51	1.25	5.45	4.53	C	17.0
8"	10.50	2.50	7.75	9.47	9.50	5.91	4.92	4	.57	.87	.63	1.25	7.45	5.75	D	34.0
10"	12.75	2.50	9.75	11.47	10.75	5.91	4.92	4	.57	1.18	.87	2.00	9.53	7.12	E	49.0
12"	14.88	3.00	11.75	13.47	12.25	5.91	4.92	4	.57	1.18	.87	2.00	11.47	8.12	E	67.0

DRAWING NOT TO SCALE, GENERAL ARRANGEMENT DRAWING ONLY.
Note: K dim is disc chordal dimension at valve face.

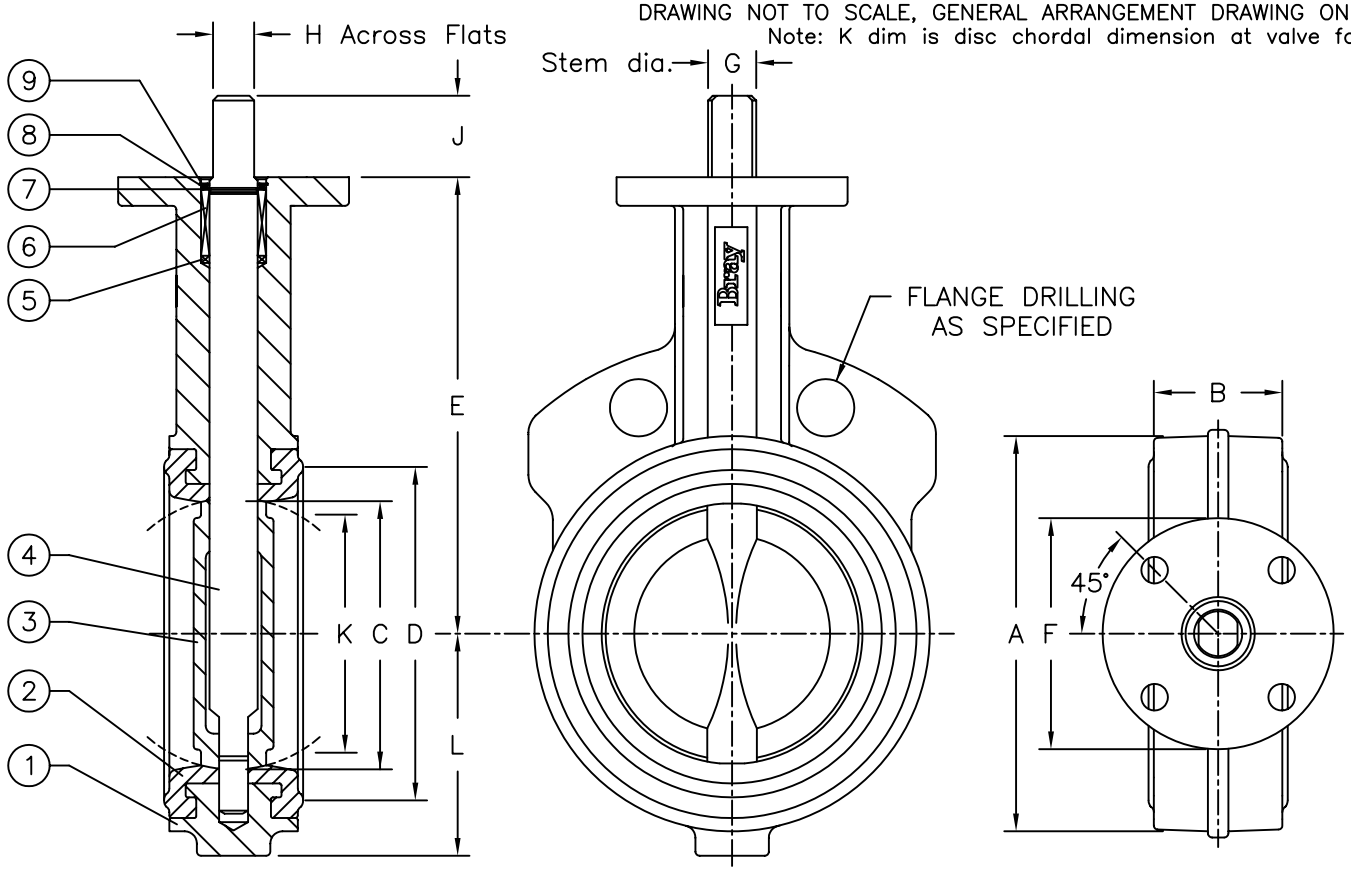

ITEM No.	NAME	No. REQUIRED	SERIES/PART No.	MATERIAL	SPECIFICATION/REMARKS
9	RETAINING RING	1		304SS	
8	THRUST WASHER	1		BRONZE	
7	STEM RETAINER	2		BRONZE	
6	BUSHING	1		ACETAL	
5	PACKING	1		BUNA–N	
4	STEM	1		416SS	ASTM A582 Type 416
3	DISC	1		NDI	Nylon 11 coated Ductile Iron
2	SEAT	1		EPDM	FOOD GRADE
1	BODY	1		CAST IRON	ASTM A126 Class B

Valve Size _____ Flg. Drilling Ansi 150
Pressure Rating 175psi
Distributor _____
CUSTOMER G.E. ZENON
Project Number _____
Contractor _____
Bray Order _____
Certified Correct By S.S. Date Jan. 2007

The High Performance Company
BRAY CONTROLS CANADA
A Subsidiary of BRAY INTERNATIONAL, Inc.

PARTS LIST AND DIMENSIONS (inches)
SERIES 30 BUTTERFLY VALVE
SIZES 2" – 12"

Series	Size	Part No.	Material Trim Code	Drawing No.
30	XXXX	11010	119	CN–070105

Bray

Bray CONTROLS CANADA CORPORATION

SERIES 30
CN–070106
Date: January 2007

Valve Size	A	B	C	D	E	F	Top Plate Drilling BC	Top Plate Drilling No. of Holes	Top Plate Drilling Hole Diameter	G	J	Key Size	K	L	Adapter Code	Weight (lbs)
14"	17.05	3.00	13.25	15.28	13.62	5.91	4.92	4	.57	1.38	2.00	.39x.39	13.04	9.38	F	95
16"	19.21	4.00	15.25	17.41	14.75	5.91	4.92	4	.57	1.38	2.00	.39x.39	14.85	10.75	F	135
18"	21.12	4.25	17.25	19.47	16.00	8.27	6.50	4	.81	1.97	2.50	.47x.39	16.85	12.00	G	200
20"	23.25	5.00	19.25	21.59	17.25	8.27	6.50	4	.81	1.97	2.50	.47x.39	18.73	13.72	G	260

DRAWING NOT TO SCALE, GENERAL ARRANGEMENT DRAWING ONLY.
Note: K dim is disc chordal dimension at valve face.

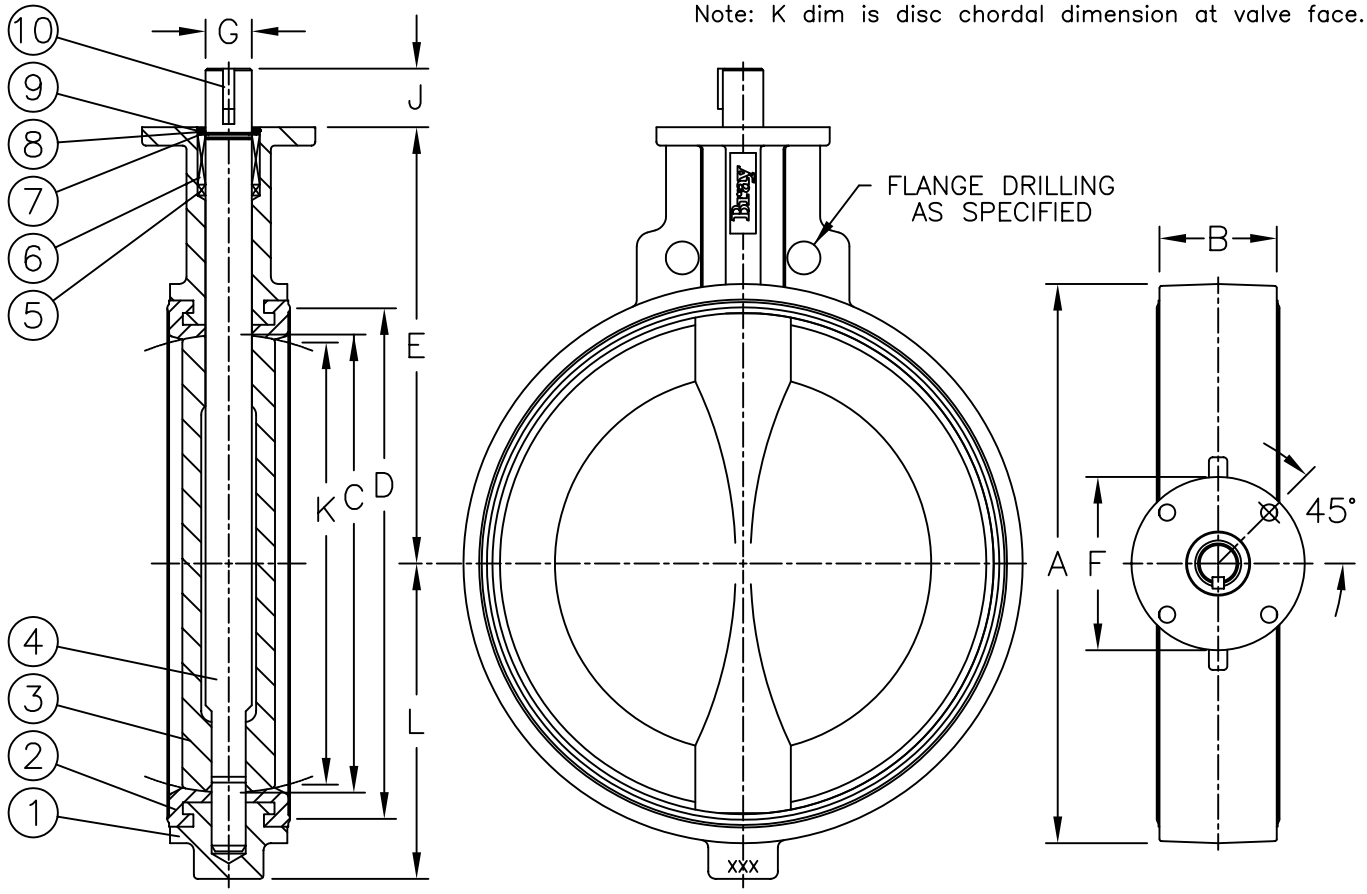

ITEM No.	NAME	No. REQUIRED	SERIES/PART No.	MATERIAL	SPECIFICATION/REMARKS
10	KEY	1		18–8SS	
9	RETAINING RING	1		304SS	
8	THRUST WASHER	1		BRONZE	
7	STEM RETAINER	2		BRONZE	
6	BUSHING	1		ACETAL	
5	PACKING	1		BUNA–N	
4	STEM	1		416SS	ASTM A582 Type 416
3	DISC	1		NDI	Nylon 11 coated Ductile Iron
2	SEAT	1		EPDM	FOOD GRADE
1	BODY	1		CAST IRON	ASTM A126 Class B

Valve Size _____ Flg. Drilling Ansi 150
Pressure Rating 150psi
Distributor _____
CUSTOMER G.E. ZENON
Project Number _____
Contractor _____
Bray Order _____
Certified Correct By S.S. Date Jan. 2007

The High Performance Company
BRAY CONTROLS CANADA
A Subsidiary of BRAY INTERNATIONAL, Inc.

PARTS LIST AND DIMENSIONS
SERIES 30 BUTTERFLY VALVE
SIZES 16" thru 20"

Series	Size	Part No.	Material Trim Code	Drawing No.
30	XXXX	11010	119	CN–070106

Bray

"ATTENTION"
THIS DOCUMENT IS VALID IF AND ONLY IF YOU PERSONALLY DOWNLOADED IT FROM WWW.BRAY.COM
IF YOU RECEIVED THIS DOCUMENT FROM ANY OTHER SOURCE, PLEASE TAKE INTO CONSIDERATION THAT ALTERATIONS COULD HAVE BEEN MADE. FOR AN ORIGINAL COPY, PLEASE CONTACT BRAY VALVE AT 281-894-5454

SERIES 30
ES11A-0254
Date: JULY 1996

Valve Size	A	B	C	D	E	F	G	J	K	L	M
2"	3.69	1.62	4.32	10.62	5.50	3.54	3.16	1.25	1.32	2.22	2.55
2½"	4.19	1.75	4.32	10.62	6.00	3.54	3.16	1.25	1.91	2.47	2.55
3"	4.88	1.75	4.32	10.62	6.25	3.54	3.16	1.25	2.55	2.81	2.55
4"	6.06	2.00	4.32	10.62	7.00	3.54	3.16	1.25	3.57	3.41	2.55
5"	7.12	2.12	4.32	10.62	7.50	3.54	3.16	1.25	4.63	4.03	2.55
6"	8.12	2.12	4.32	10.62	8.00	3.54	3.16	1.25	5.45	4.53	2.55
8"	10.50	2.50	6.66	11.75	9.50	5.91	3.16	1.25	7.45	5.75	3.70
10"	12.75	2.50	6.66	11.75	10.75	5.91	3.16	2.00	9.53	7.12	3.70
12"	14.88	3.00	6.66	11.75	12.25	5.91	3.16	2.00	11.47	8.12	3.70

Note: K dim is disc chordal dimension at valve face.

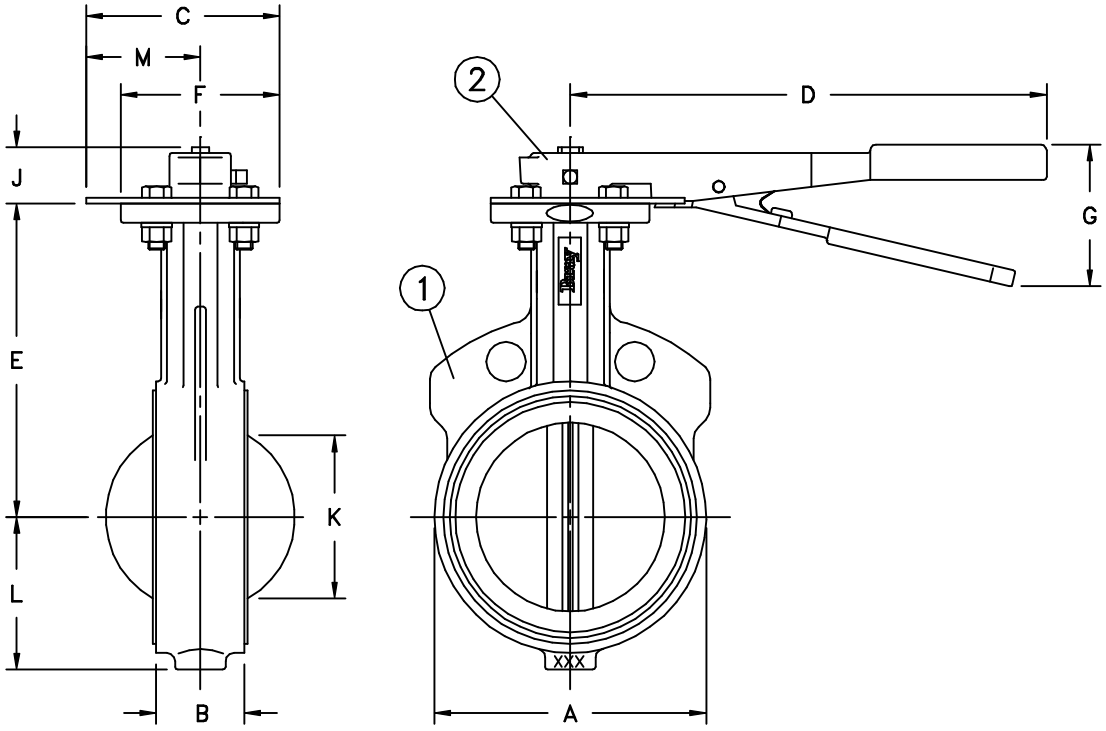

ITEM No.	NAME	No. REQUIRED	SERIES/PART No.	MATERIAL	SPECIFICATION/REMARKS
2	HANDLE KIT	1			
1	VALVE	1			

Valve Size _____ Flg. Drilling _____
Pressure Rating _____
Customer/Project _____
Inq./P.O. No. _____
Bray Order No. _____
Certified Correct By _____ Date _____

The High Performance Company

BRAY VALVE & CONTROLS
A Subsidiary of BRAY INTERNATIONAL, Inc.

DIMENSIONAL DRAWING (inches)
SERIES 30, SIZES 2" THRU 12" BUTTERFLY VALVES
WITH SERIES 01 HANDLE KITS

Series	Size	Part No.	Material Trim Code	Drawing No.
				ES11A-0254

Bray

REV. RFP / ERN-2442

ESNUMBER

"ATTENTION"
THIS DOCUMENT IS VALID IF AND ONLY IF YOU PERSONALLY DOWNLOADED IT FROM WWW.BRAY.COM
IF YOU RECEIVED THIS DOCUMENT FROM ANY OTHER SOURCE, PLEASE TAKE INTO CONSIDERATION THAT ALTERATIONS
COULD HAVE BEEN MADE. FOR AN ORIGINAL COPY, PLEASE CONTACT BRAY VALVE AT 281-894-5454

SERIES 30
ES11A-0255
Date: JULY 1996

Valve Size	Gear Operator	A	B	C	E	F	G	J	K	L	N	P
2"	20:1	3.69	1.62	4.00	5.50	1.77	1.62	1.44	1.32	2.22	5.34	8
2½"	20:1	4.19	1.75	4.00	6.00	1.77	1.62	1.44	1.91	2.47	5.34	8
3"	20:1	4.88	1.75	4.00	6.25	1.77	1.62	1.44	2.55	2.81	5.34	8
4"	20:1	6.06	2.00	4.00	7.00	1.77	1.62	1.44	3.57	3.41	5.34	8
5"	20:1	7.06	2.12	4.00	7.50	1.77	1.62	1.44	4.63	4.03	5.34	8
6"	20:1	8.12	2.12	4.00	8.00	1.77	1.62	1.44	5.45	4.53	5.34	8
8"	30:1	10.50	2.50	4.00	9.50	2.96	2.62	1.25	7.45	5.75	7.50	8
10"	30:1	12.75	2.50	4.00	10.75	2.96	2.62	1.25	9.53	7.12	7.50	8
12"	30:1	14.88	3.00	4.00	12.25	2.96	2.62	1.25	11.47	8.12	7.50	8
14"	30:1	17.05	3.00	4.00	13.62	2.96	2.62	1.25	13.04	9.38	7.50	8
14"	50:1	17.05	3.00	6.00	13.62	2.96	3.12	1.69	13.04	9.38	11.94	12
16"	30:1	19.21	4.00	4.00	14.75	2.96	2.62	1.25	14.85	10.75	7.50	8
16"	50:1	19.21	4.00	6.00	14.75	2.96	3.12	1.69	14.85	10.75	11.94	12
18"	80:1	21.12	4.25	6.00	16.00	4.14	4.56	2.38	16.85	12.00	14.94	12
20"	80:1	23.25	5.00	6.00	17.25	4.14	4.56	2.38	18.73	13.72	14.94	12

Note: K dim is disc chordal dimension at valve face.

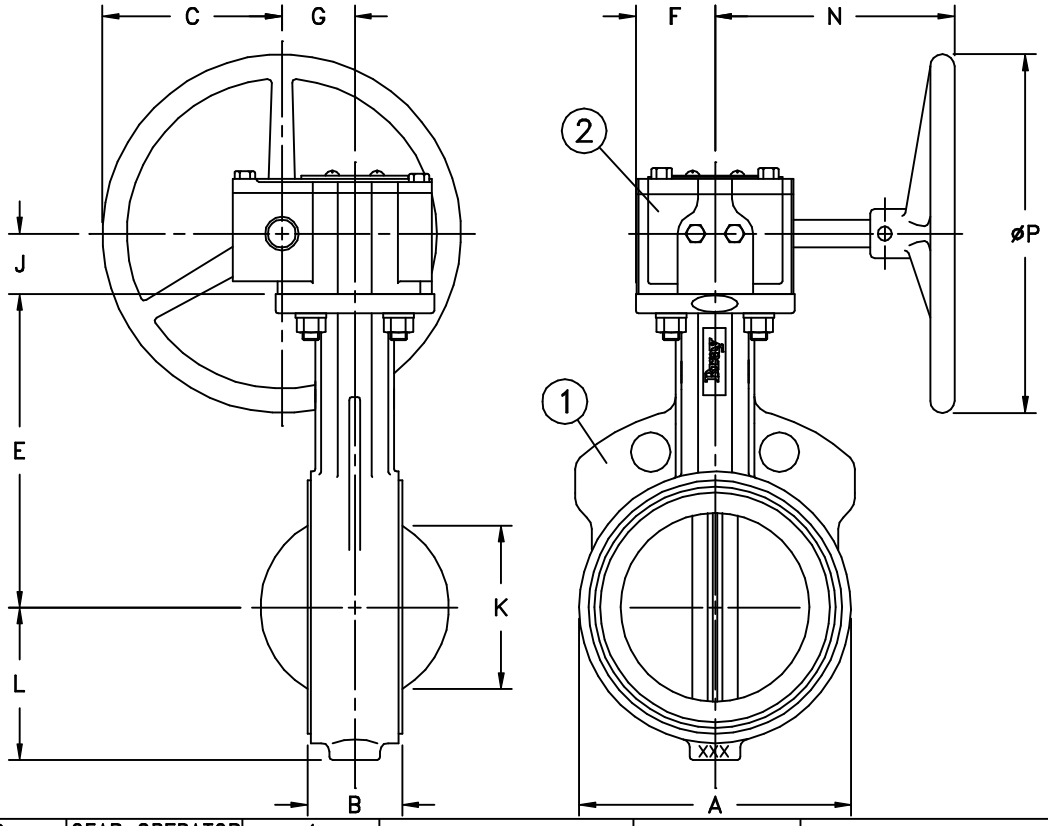

ITEM No.	NAME	No. REQUIRED	SERIES/PART No.	MATERIAL	SPECIFICATION/REMARKS
2	GEAR OPERATOR	1			
1	VALVE	1			

Valve Size _____ Flg. Drilling _____
Pressure Rating _____
Customer/Project _____
Inq./P.O. No. _____
Bray Order No. _____
Certified Correct By _____ Date _____

The High Performance Company

BRAY VALVE & CONTROLS
A Subsidiary of BRAY INTERNATIONAL, Inc.

DIMENSIONAL DRAWING (inches)
SERIES 30, SIZES 2" THRU 20" BUTTERFLY VALVES
WITH SERIES 04 GEAR OPERATORS

Series	Size	Part No.	Material Trim Code	Drawing No.
				ES11A-0255

Bray

REV. RFP / ERN-2442

ESNUMBER

Bray CONTROLS CANADA CORPORATION

SERIES 31
CN–070103
Date: January 2007

Valve Size	A	B	C	D	E	F	Top Plate Drilling BC	Top Plate Drilling No. of Holes	Top Plate Drilling Hole Diameter	G	H	J	K	L	Lug Bolting Data BC	Lug Bolting Data No. of Holes	Lug Bolting Data Threads UNC–2B	Adapter Code	Weight (lbs)
2"	3.69	1.62	2.00	2.84	5.50	3.54	2.76	4	.39	.55	.39	1.25	1.32	2.30	4.75	4	.62–11	A	7.0
2.5"	4.19	1.75	2.50	3.34	6.00	3.54	2.76	4	.39	.55	.39	1.25	1.91	2.57	5.50	4	.62–11	A	8.0
3"	4.88	1.75	3.00	4.03	6.25	3.54	2.76	4	.39	.55	.39	1.25	2.55	2.81	6.00	4	.62–11	A	9.0
4"	6.06	2.00	4.00	5.16	7.00	3.54	2.76	4	.39	.63	.43	1.25	3.57	4.09	7.50	8	.62–11	B	15.0
5"	7.12	2.12	5.00	6.16	7.50	3.54	2.76	4	.39	.75	.51	1.25	4.63	4.61	8.50	8	.75–10	C	20.0
6"	8.12	2.12	5.75	7.02	8.00	3.54	2.76	4	.39	.75	.51	1.25	5.45	5.06	9.50	8	.75–10	C	23.0
8"	10.50	2.50	7.75	9.47	9.50	5.91	4.92	4	.57	.87	.63	1.25	7.45	6.05	11.75	8	.75–10	D	42.0
10"	12.75	2.50	9.75	11.47	10.75	5.91	4.92	4	.57	1.18	.87	2.00	9.53	7.69	14.25	12	.88–9	E	66.0
12"	14.88	3.00	11.75	13.47	12.25	5.91	4.92	4	.57	1.18	.87	2.00	11.47	9.02	17.00	12	.88–9	E	88.0

DRAWING NOT TO SCALE, GENERAL ARRANGEMENT DRAWING ONLY.
Note: K dim is disc chordal dimension at valve face.

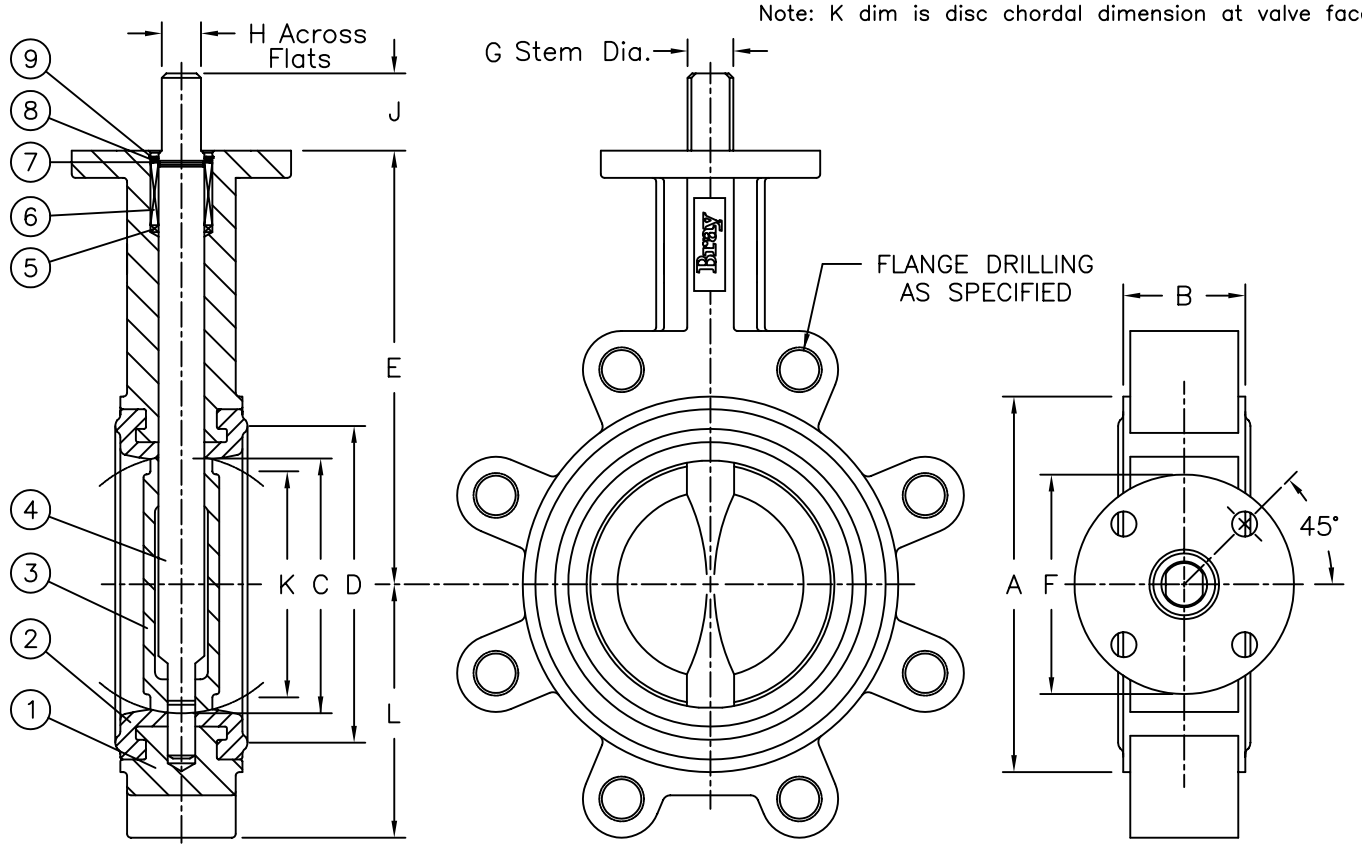

ITEM No.	NAME	No. REQUIRED	SERIES/PART No.	MATERIAL	SPECIFICATION/REMARKS
9	RETAINING RING	1		304SS	
8	THRUST WASHER	1		BRONZE	
7	STEM RETAINER	2		BRONZE	
6	BUSHING	1		ACETAL	
5	PACKING	1		BUNA–N	
4	STEM	1		416SS	ASTM A582 Type 416
3	DISC	1		316SS	ASTM A351 CF8M
2	SEAT	1		EPDM	FOOD GRADE
1	BODY	1		CAST IRON	ASTM A126 Class B

Valve Size _____ Flg. Drilling Ansi 150
Pressure Rating 175psi
Distributor _____
CUSTOMER G.E. ZENON
Project Number _____
Contractor _____
Bray Order _____
Certified Correct By S.S. Date Jan. 2007

The High Performance Company
BRAY CONTROLS CANADA
A Subsidiary of BRAY INTERNATIONAL, Inc.

PARTS LIST AND DIMENSIONS (inches)
SERIES 31 BUTTERFLY VALVE
SIZES 2" – 12"

Series	Size	Part No.	Material Trim Code	Drawing No.
31	XXXX	11010	169	CN–070103

Bray

Bray CONTROLS CANADA CORPORATION

SERIES 31
CN–070104
Date: January 2007

Valve Size	A	B	C	D	E	F	Top Plate Drilling BC	Top Plate Drilling No. of Holes	Top Plate Drilling Hole Diameter	G	J	Key Size	K	L	Lug Bolting Data BC	Lug Bolting Data No. of Holes	Lug Bolting Data Threads UNC–2B	Adapter Code	Weight (lbs)
14"	17.05	3.00	13.25	15.28	13.62	5.91	4.92	4	.57	1.38	2.00	.39x.39	13.04	9.93	18.75	12	1.00–8	F	114
16"	19.21	4.00	15.25	17.14	14.75	5.91	4.92	4	.57	1.38	2.00	.39x.39	14.85	11.30	21.25	16	1.00–8	F	166
18"	21.12	4.25	17.25	19.47	16.00	8.27	6.50	4	.81	1.97	2.50	.47x.39	16.85	12.16	22.75	16	1.12–7	G	226
20"	23.25	5.00	19.25	21.59	17.25	8.27	6.50	4	.81	1.97	2.50	.47x.39	18.73	14.00	25.00	20	1.12–7	G	305

DRAWING NOT TO SCALE, GENERAL ARRANGEMENT DRAWING ONLY.
Note: K dim is disc chordal dimension at valve face.

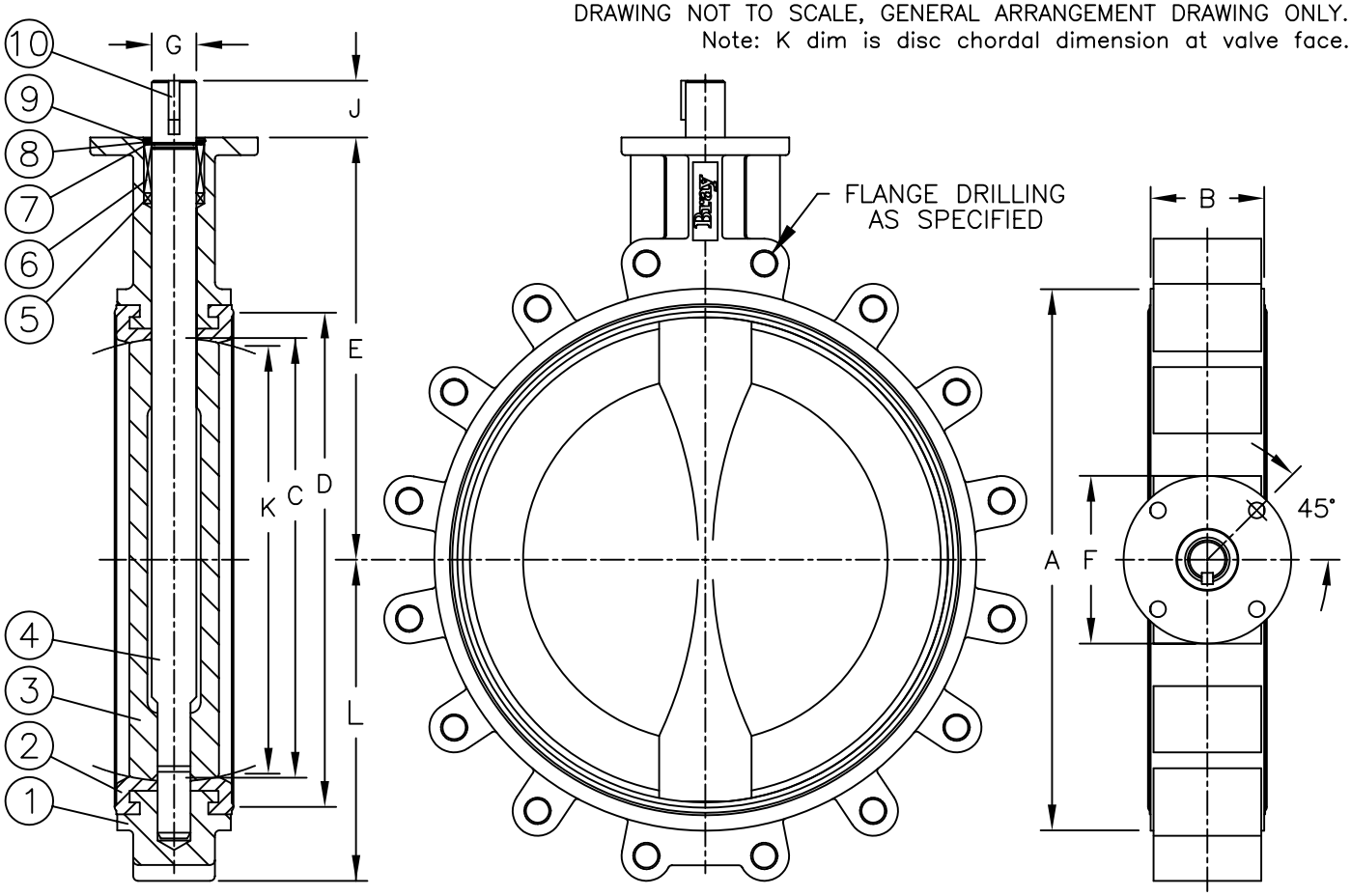

ITEM No.	NAME	No. REQUIRED	SERIES/PART No.	MATERIAL	SPECIFICATION/REMARKS
10	KEY	1		18–8SS	
9	RETAINING RING	1		304SS	
8	THRUST WASHER	1		BRONZE	
7	STEM RETAINER	2		BRONZE	
6	BUSHING	1		ACETAL	
5	PACKING	1		BUNA–N	
4	STEM	1		416SS	ASTM A582 Type 416
3	DISC	1		316SS	ASTM A351 CF8M
2	SEAT	1		EPDM	FOOD GRADE
1	BODY	1		CAST IRON	ASTM A126 Class B

Valve Size _____ Flg. Drilling Ansi 150
Pressure Rating 150psi
Distributor _____
CUSTOMER G.E. ZENON
Project Number _____
Contractor _____
Bray Order _____
Certified Correct By S.S. Date Jan. 2007

The High Performance Company

BRAY CONTROLS CANADA
A Subsidiary of BRAY INTERNATIONAL, Inc.

PARTS LIST AND DIMENSIONS
SERIES 31 BUTTERFLY VALVE
SIZES 16" thru 20"

Series	Size	Part No.	Material Trim Code	Drawing No.
31	XXXX	11010	169	CN–070104

Bray

Bray CONTROLS CANADA CORPORATION

SERIES 31
CN–070107
Date: January 2007

Valve Size	A	B	C	D	E	F	Top Plate Drilling BC	Top Plate Drilling No. of Holes	Top Plate Drilling Hole Diameter	G	H	J	K	L	Lug Bolting Data BC	Lug Bolting Data No. of Holes	Lug Bolting Data Threads UNC–2B	Adapter Code	Weight (lbs)
2"	3.69	1.62	2.00	2.84	5.50	3.54	2.76	4	.39	.55	.39	1.25	1.32	2.30	4.75	4	.62–11	A	7.0
2.5"	4.19	1.75	2.50	3.34	6.00	3.54	2.76	4	.39	.55	.39	1.25	1.91	2.57	5.50	4	.62–11	A	8.0
3"	4.88	1.75	3.00	4.03	6.25	3.54	2.76	4	.39	.55	.39	1.25	2.55	2.81	6.00	4	.62–11	A	9.0
4"	6.06	2.00	4.00	5.16	7.00	3.54	2.76	4	.39	.63	.43	1.25	3.57	4.09	7.50	8	.62–11	B	15.0
5"	7.12	2.12	5.00	6.16	7.50	3.54	2.76	4	.39	.75	.51	1.25	4.63	4.61	8.50	8	.75–10	C	20.0
6"	8.12	2.12	5.75	7.02	8.00	3.54	2.76	4	.39	.75	.51	1.25	5.45	5.06	9.50	8	.75–10	C	23.0
8"	10.50	2.50	7.75	9.47	9.50	5.91	4.92	4	.57	.87	.63	1.25	7.45	6.05	11.75	8	.75–10	D	42.0
10"	12.75	2.50	9.75	11.47	10.75	5.91	4.92	4	.57	1.18	.87	2.00	9.53	7.69	14.25	12	.88–9	E	66.0
12"	14.88	3.00	11.75	13.47	12.25	5.91	4.92	4	.57	1.18	.87	2.00	11.47	9.02	17.00	12	.88–9	E	88.0

DRAWING NOT TO SCALE, GENERAL ARRANGEMENT DRAWING ONLY.
Note: K dim is disc chordal dimension at valve face.

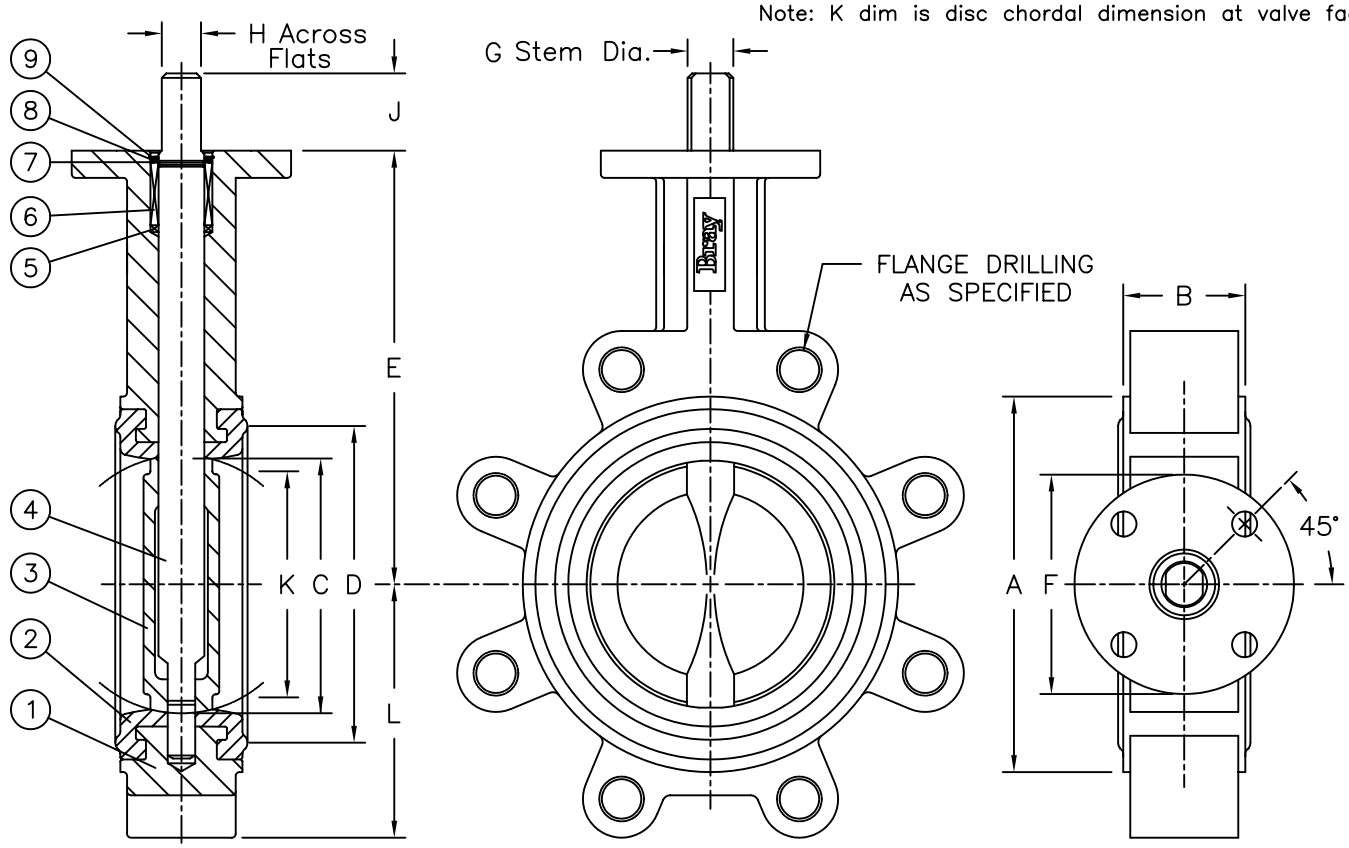

ITEM No.	NAME	No. REQUIRED	SERIES/PART No.	MATERIAL	SPECIFICATION/REMARKS
9	RETAINING RING	1		304SS	
8	THRUST WASHER	1		BRONZE	
7	STEM RETAINER	2		BRONZE	
6	BUSHING	1		ACETAL	
5	PACKING	1		BUNA–N	
4	STEM	1		416SS	ASTM A582 Type 416
3	DISC	1		NDI	Nylon 11 coated Ductile Iron
2	SEAT	1		EPDM	FOOD GRADE
1	BODY	1		CAST IRON	ASTM A126 Class B

Valve Size _____ Flg. Drilling Ansi 150
Pressure Rating 175psi
Distributor _____
CUSTOMER G.E. ZENON
Project Number _____
Contractor _____
Bray Order _____
Certified Correct By S.S. Date Jan. 2007

The High Performance Company
BRAY CONTROLS CANADA
A Subsidiary of BRAY INTERNATIONAL, Inc.

PARTS LIST AND DIMENSIONS (inches)
SERIES 31 BUTTERFLY VALVE
SIZES 2" – 12"

Series	Size	Part No.	Material Trim Code	Drawing No.
31	XXXX	11010	119	CN–070107

Bray

Bray CONTROLS CANADA CORPORATION

SERIES 31
CN–070108
Date: January 2007

Valve Size	A	B	C	D	E	F	Top Plate Drilling BC	Top Plate Drilling No. of Holes	Top Plate Drilling Hole Diameter	G	J	Key Size	K	L	Lug Bolting Data BC	Lug Bolting Data No. of Holes	Lug Bolting Data Threads UNC–2B	Adapter Code	Weight (lbs)
14"	17.05	3.00	13.25	15.28	13.62	5.91	4.92	4	.57	1.38	2.00	.39x.39	13.04	9.93	18.75	12	1.00–8	F	114
16"	19.21	4.00	15.25	17.14	14.75	5.91	4.92	4	.57	1.38	2.00	.39x.39	14.85	11.30	21.25	16	1.00–8	F	166
18"	21.12	4.25	17.25	19.47	16.00	8.27	6.50	4	.81	1.97	2.50	.47x.39	16.85	12.16	22.75	16	1.12–7	G	226
20"	23.25	5.00	19.25	21.59	17.25	8.27	6.50	4	.81	1.97	2.50	.47x.39	18.73	14.00	25.00	20	1.12–7	G	305

DRAWING NOT TO SCALE, GENERAL ARRANGEMENT DRAWING ONLY.
Note: K dim is disc chordal dimension at valve face.

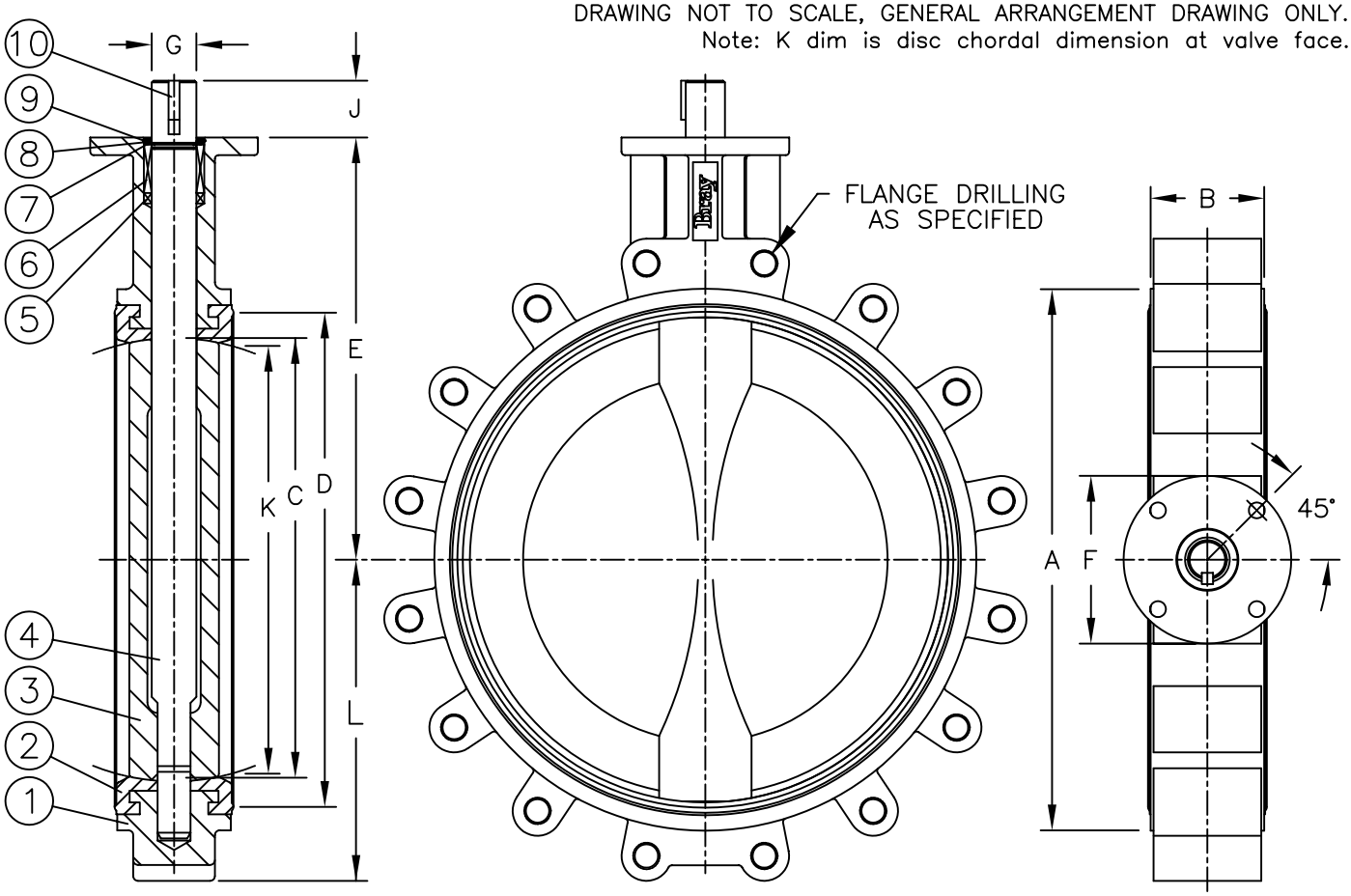

ITEM No.	NAME	No. REQUIRED	SERIES/PART No.	MATERIAL	SPECIFICATION/REMARKS
10	KEY	1		18–8SS	
9	RETAINING RING	1		304SS	
8	THRUST WASHER	1		BRONZE	
7	STEM RETAINER	2		BRONZE	
6	BUSHING	1		ACETAL	
5	PACKING	1		BUNA–N	
4	STEM	1		416SS	ASTM A582 Type 416
3	DISC	1		NDI	Nylon 11 coated Ductile Iron
2	SEAT	1		EPDM	FOOD GRADE
1	BODY	1		CAST IRON	ASTM A126 Class B

Valve Size _____ Flg. Drilling Ansi 150
Pressure Rating 150psi
Distributor _____
CUSTOMER G.E. ZENON
Project Number _____
Contractor _____
Bray Order _____
Certified Correct By S.S. Date Jan. 2007

The High Performance Company
BRAY CONTROLS CANADA
A Subsidiary of BRAY INTERNATIONAL, Inc.

PARTS LIST AND DIMENSIONS
SERIES 31 BUTTERFLY VALVE
SIZES 16" thru 20"

Series	Size	Part No.	Material Trim Code	Drawing No.
31	XXXX	11010	119	CN–070108

Bray

"ATTENTION"
THIS DOCUMENT IS VALID IF AND ONLY IF YOU PERSONALLY DOWNLOADED IT FROM WWW.BRAY.COM
IF YOU RECEIVED THIS DOCUMENT FROM ANY OTHER SOURCE, PLEASE TAKE INTO CONSIDERATION THAT ALTERATIONS
COULD HAVE BEEN MADE. FOR AN ORIGINAL COPY, PLEASE CONTACT BRAY VALVE AT 281-894-5454

SERIES 31
ES11A-0256
Date: JULY 1996

Valve Size	A	B	C	D	E	F	G	J	K	L	M
2"	3.69	1.62	4.32	10.62	5.50	3.54	3.16	1.25	1.32	2.30	2.55
2½"	4.19	1.75	4.32	10.62	6.00	3.54	3.16	1.25	1.91	2.57	2.55
3"	4.88	1.75	4.32	10.62	6.25	3.54	3.16	1.25	2.55	2.81	2.55
4"	6.06	2.00	4.32	10.62	7.00	3.54	3.16	1.25	3.57	4.09	2.55
5"	7.12	2.12	4.32	10.62	7.50	3.54	3.16	1.25	4.63	4.61	2.55
6"	8.12	2.12	4.32	10.62	8.00	3.54	3.16	1.25	5.45	5.06	2.55
8"	10.50	2.50	6.66	11.75	9.50	5.91	3.16	1.25	7.45	6.05	3.70
10"	12.75	2.50	6.66	11.75	10.75	5.91	3.16	2.00	9.53	7.69	3.70
12"	14.88	3.00	6.66	11.75	12.25	5.91	3.16	2.00	11.47	9.02	3.70

Note: K dim is disc chordal dimension at valve face.

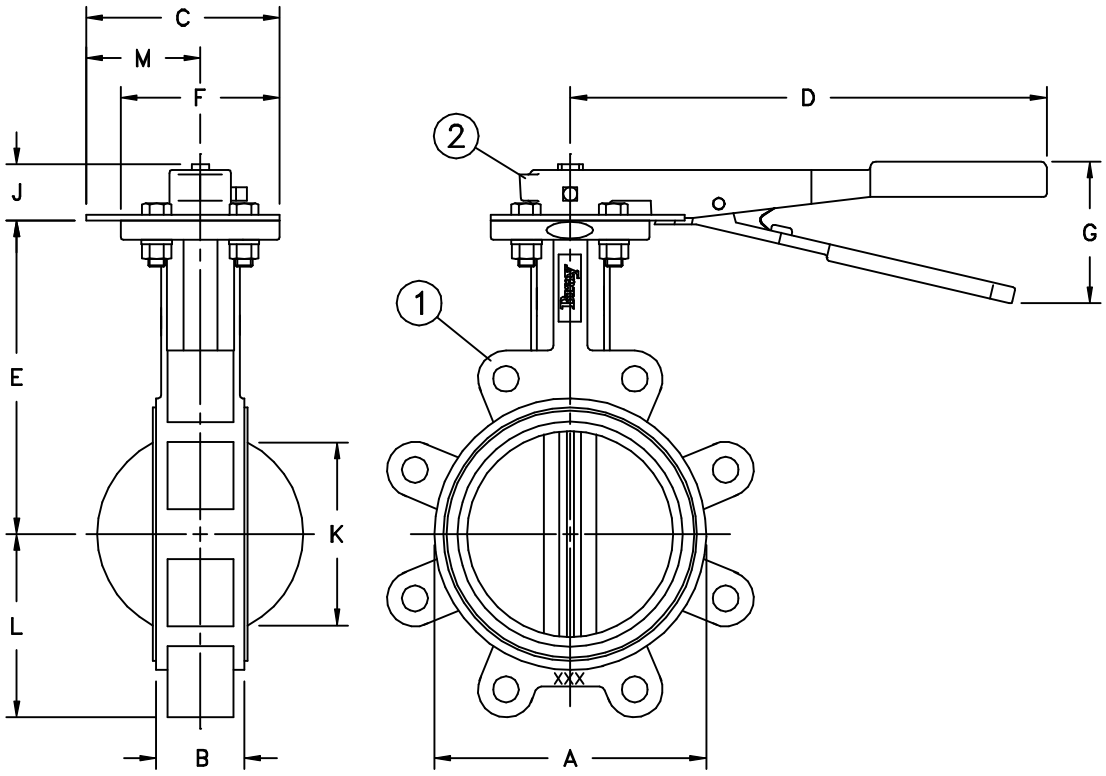

ITEM No.	NAME	No. REQUIRED	SERIES/PART No.	MATERIAL	SPECIFICATION/REMARKS
2	HANDLE KIT	1			
1	VALVE	1			

Valve Size _____ Flg. Drilling _____
Pressure Rating _____
Customer/Project _____
Inq./P.O. No. _____
Bray Order No. _____
Certified Correct By _____ Date _____

The High Performance Company

BRAY VALVE & CONTROLS
A Subsidiary of BRAY INTERNATIONAL, Inc.

DIMENSIONAL DRAWING (inches)
SERIES 31, SIZES 2" THRU 12" BUTTERFLY VALVES
WITH SERIES 01 HANDLE KIT

Series	Size	Part No.	Material Trim Code	Drawing No.
				ES11A-0256

Bray

REV. RFP / ERN-2442

ESNUMBER

ATTENTION
THIS DOCUMENT IS VALID IF AND ONLY IF YOU PERSONALLY DOWNLOADED IT FROM WWW.BRAY.COM
IF YOU RECEIVED THIS DOCUMENT FROM ANY OTHER SOURCE, PLEASE TAKE INTO CONSIDERATION THAT ALTERATIONS COULD HAVE BEEN MADE. FOR AN ORIGINAL COPY, PLEASE CONTACT BRAY VALVE AT 281-894-5454

SERIES 31
ES11A-0257
Date: JULY 1996

Valve Size	Gear Operator	A	B	C	E	F	G	J	K	L	N	P
2"	20:1	3.69	1.62	4.00	5.50	1.77	1.62	1.44	1.32	2.30	5.34	8
2½"	20:1	4.19	1.75	4.00	6.00	1.77	1.62	1.44	1.91	2.57	5.34	8
3"	20:1	4.88	1.75	4.00	6.25	1.77	1.62	1.44	2.55	2.81	5.34	8
4"	20:1	6.06	2.00	4.00	7.00	1.77	1.62	1.44	3.57	4.09	5.34	8
5"	20:1	7.06	2.12	4.00	7.50	1.77	1.62	1.44	4.63	4.61	5.34	8
6"	20:1	8.12	2.12	4.00	8.00	1.77	1.62	1.44	5.45	5.06	5.34	8
8"	30:1	10.50	2.50	4.00	9.50	2.96	2.62	1.25	7.45	6.05	7.50	8
10"	30:1	12.75	2.50	4.00	10.75	2.96	2.62	1.25	9.53	7.69	7.50	8
12"	30:1	14.88	3.00	4.00	12.25	2.96	2.62	1.25	11.47	9.02	7.50	8
14"	30:1	17.05	3.00	4.00	13.62	2.96	2.62	1.25	13.04	9.93	7.50	8
14"	50:1	17.05	3.00	6.00	13.62	2.96	3.12	1.69	13.04	9.93	11.94	12
16"	30:1	19.21	4.00	4.00	14.75	2.96	2.62	1.25	14.85	11.30	7.50	8
16"	50:1	19.21	4.00	6.00	14.75	2.96	3.12	1.69	14.85	11.30	11.94	12
18"	80:1	21.12	4.25	6.00	16.00	4.14	4.56	2.38	16.85	12.16	14.94	12
20"	80:1	23.25	5.00	6.00	17.25	4.14	4.56	2.38	18.73	14.00	14.94	12

Note: K dim is disc chordal dimension at valve face.

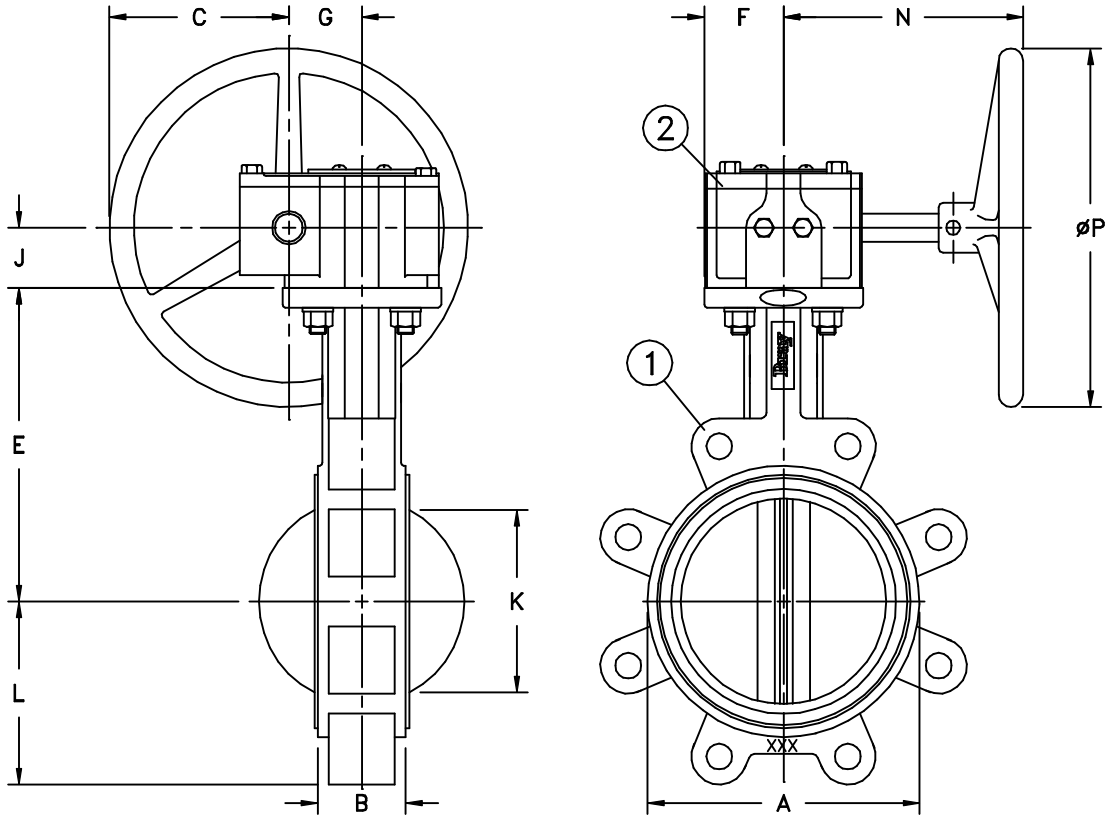

ITEM No.	NAME	No. REQUIRED	SERIES/PART No.	MATERIAL	SPECIFICATION/REMARKS
2	GEAR OPERATOR	1			
1	VALVE	1			

Valve Size _____ Flg. Drilling _____
Pressure Rating _____
Customer/Project _____
Inq./P.O. No. _____
Bray Order No. _____
Certified Correct By _____ Date _____

The High Performance Company

BRAY VALVE & CONTROLS
A Subsidiary of BRAY INTERNATIONAL, Inc.

DIMENSIONAL DRAWING (inches)
SERIES 31, SIZES 2" THRU 20" BUTTERFLY VALVES
WITH SERIES 04 GEAR OPERATORS

Series	Size	Part No.	Material Trim Code	Drawing No.
				ES11A-0257

Bray

REV. RFP / ERN-2442

ESNUMBER

VALVE DETAILS

> Series 30/31 Resilient Seated Butterfly Valve
> Wafer | Lug
> NPS 2 to 20 | DN 50 to 500

BODY

> Shall be one-piece wafer or lug design with extended neck to allow for 2" of piping insulation.
> Flange locating holes shall be provided on wafer bodies to allow for quick and precise alignment during valve installation.
> Flange hole drilling per international flange standard as specified.
> The only internal wetted parts of the valve should be the disc and seat.

DISC

> Disc edge and hub on metal discs shall be spherically machined and hand polished for torque and maximum sealing capability.

STEM

> Shall be one-piece design.
> Disc to stem connection shall be and internal double "D" design with no possible leak paths in the disc-to-stem connection. External disc-to stem connections such as disc screws or pins are not allowed.
> Stem shall be mechanically retained in the body neck and no part of the stem shall be exposed to the line media.
> Stem shall not be a wetted part.

SEAT

> Shall be tongue-and-groove seat with a primary hub seal and a molded flange O-ring for weld neck and slip-on flanges.
> The seat shall totally encapsulate the body isolating it from the line media and no flange gaskets shall be required.
> Seat shall be peroxide cured to prevent oxidation on seat surface to ensure low torques through life of the valve.

PACKING AND BEARINGS

> A non-corrosive bushing and a self-adjusting stem seal shall be provided.
> No field adjustment shall be necessary to maintain optimum field performance.

APPROVALS AND CERTIFICATIONS

> CE/PED Certification
> NSF/ANSI 61 and 372
> SIL
> ABS
> Bureau Veritas
> DNV



VALVE ACTUATOR MOUNTING PAD

> ISO 5211

TESTING

> Manufactured, assembled, and tested in compliance with a written ISO 9001 Quality Assurance Program.
> Valve shall be tested to 110% of the rated pressure.

PRESSURE RATINGS

> Valve shall be rated for bubble-tight shut-off at pressure rating shown below.

BI-DIRECTIONAL

Standard Disc

> NPS 2 to 12 | DN 50 to 300
  - 175 psi (12.0 bar)
> NPS 14 to 20 | DN 350 to 500
  - 150 psi (10.3 bar)

DEAD-END SERVICE (LUG BODY ONLY WITH DOWNSTREAM FLANGE REMOVED)

Standard Disc

> NPS 2 to 12 | DN 50 to 300
  - 75 psi (5.2 bar)
> NPS 14 to 20 | DN 350 to 500
  - 50 psi (3.4 bar)

© 2022 BRAY INTERNATIONAL. ALL RIGHTS RESERVED. BRAY.COM

TAG NUMBERS
20-FV-621-1/2/3/4
20-FV-622-1/2/3/4



BUTTERFLY VALVES
RESILIENT SEATED

SERIES 30/31 Wafer/Lug
2”-20” (50mm-500mm)

The
High
Performance
Company

SERIES 30/31

2”-20” (50mm-500mm) Bray® Controls is proud to offer a high quality line of butterfly valves to meet the requirements of today’s market. Combining years of field experience, research and development, Bray has designed many unique features in the Series 30/31 not previously available. The results are longer service life, greater reliability, ease of parts replacement and interchangeability of components.

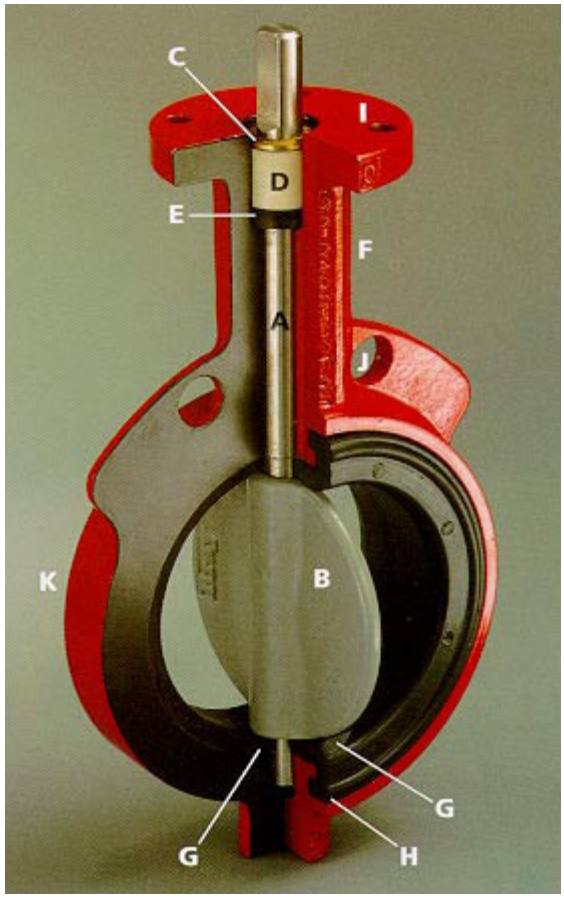

STEM SEAL (E)

Double "U" cup seal design is self-adjusting and gives positive sealing in both directions. Prevents external substances from entering stem bore.

NECK (F)

Extended neck length allows for 2" of piping insulation and is easily accessible for mounting actuators.

PRIMARY AND SECONDARY SEALS (G)

The Primary Seal is achieved by an interference fit of the molded seat flat with the disc hub. The Secondary Seal is created because the stem diameter is greater than the diameter of the seat stem hole. These seals prevent line media from coming in contact with the stem or body.

BRAY UNIQUE SEAT DESIGN (H)

One of the valve's key elements is Bray's unique "*Tongue-and-Groove*" seat design. This resilient seat features lower torque than many valves on the market today and provides complete isolation of flowing media from the body. The tongue-and-groove seat to body retention method is superior to traditional designs, making field replacement simple and fast. The seat is specifically designed to seal with slip-on or weld-neck flanges. The seat features a molded O-ring which eliminates the use of flange gaskets. An important maintenance feature is that all resilient seats for Bray butterfly valves Series 20, 21, 30, 31, 34 are completely interchangeable.

DISC AND STEM CONNECTION (A)

Features a high-strength through stem design. The close tolerance, double "D" connection that drives the valve disc is an exclusive feature of the Bray valve. It eliminates stem retention components being exposed to the line media, such as disc screws

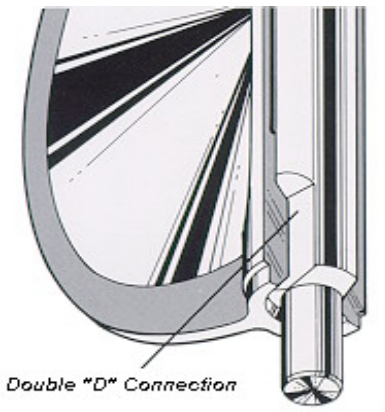

and taper pins, which commonly result in leak paths, corrosion, and vibration failures. Disc screws or taper pins, due to wear and corrosion, often require difficult machining for disassembly. Disassembly of the Bray stem is just a matter of pulling the stem out of the disc. Without fasteners obstructing the line flow, the Series 30/31 Cv values are higher than many other valves, turbulence is reduced, and pressure recovery is increased. The stem ends and top mounting flange are standardized for interchangeability with Bray actuators.

DISC (B)

Casting is spherically machined, hand polished to provide a bubble-tight shut off, minimum torque, and longer seat life. The disc O.D. clearance is designed to work with all standard piping.

"SPIROLOX*" RETAINING RING (C)

The stem is retained in the body by means of a unique Stainless Steel “Spirolox®” retaining ring, a thrust washer and two C-rings, manufactured from brass as standard, stainless steel upon request. The retaining ring may be easily removed with a standard hand tool. The stem retaining assembly prevents unintentional removal of the stem during field service.

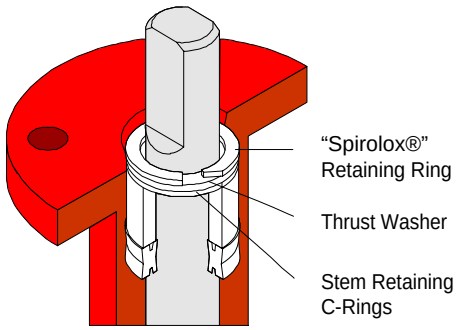

*"Spirolox®" designation is a registered trademark of TRW, Inc.

STEM BUSHING (D)

Non-Corrosive, heavy duty acetal bushing absorbs actuator side thrusts.

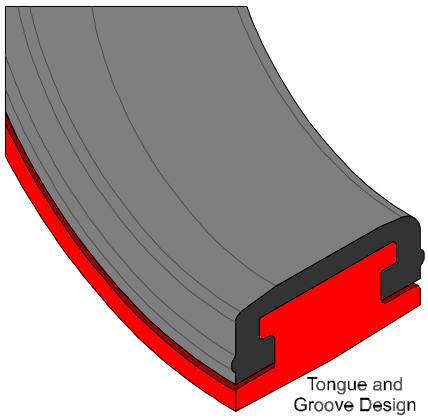

SERIES 30/31

ACTUATOR MOUNTING FLANGE AND STEM CONNECTION (I)

Universally designed to ISO 5211 for direct mounting of Bray® power actuators and manual operators.

FLANGE LOCATING HOLES (J)

Provides quick and proper alignment during installation.

BODY (K)

One-piece wafer or lug style. Epoxy coating for excellent corrosion resistance. Bray valve bodies meet ANSI 150 pressure ratings for hydrostatic shell test requirements.



DESIGN FEATURES

Bray's Series 30 valve is a wafer version with flange locating holes, and the Series 31 is the companion lug version for dead-end service and other flange requirements. All Bray valves are tested to 110% of full pressure rating before shipment.
A major design advantage of Bray valve product lines is international compatibility. The same valve is compatible with most world flange standards - ANSI Class 125/150, BS 10 Tables D&E, BS4504 NP 10/16, DIN ND10/16, AS 2129 and JIS 10. In addition, the valves are designed to comply with ISO 5752 face-to-face and ISO 5211 actuator mounting flanges. Therefore, one valve design can be used in many different world markets. Due to a modular concept of design, all Bray® handles, manual gear operators and pneumatic and electric actuators mount directly to Bray valves. No brackets or adapters are required. Bray interchangeability and compatibility offers you the best in uniformity of product line and low-cost performance in the industry today.

EPOXY COATING CORROSION PROTECTION

Bray's standard product offers valve bodies with an epoxy coating, providing excellent corrosion and wear resistance to the valve's surface. The Bray epoxy coating is a hard, high gloss red finish.

- Chemical Resistance - resists a broad range of chemicals including: dilute aqueous acids and alkalies, petroleum solvents, alcohols, greases and oils. Offers outstanding resistance to humidity and water.
- Weatherability - outdoor tested resistant to ultra-violet radiation.
- Abrasion Resistance - excellent resistance to abrasion.
- Impact Resistance - withstands impact without chipping or cracking.

NYLON 11 COATING

Optionally available for valve bodies where outstanding protection and performance is needed. A thermoplastic produced from a vegetable base, this coating is inert to fungus growth and molds. Nylon 11 is *USDA Approved*, as well as certified to ANSI/NSF 61 for water service.

- Corrosion Resistance - superior resistance to a broad range of chemical environments. Salt spray tested in excess of 2,000 hours and seawater immersion tested for over 10 years without corrosion to metal substrates. Nylon 11 features a very low coefficient of friction and excellent resistance to impact and ultra-violet radiation.

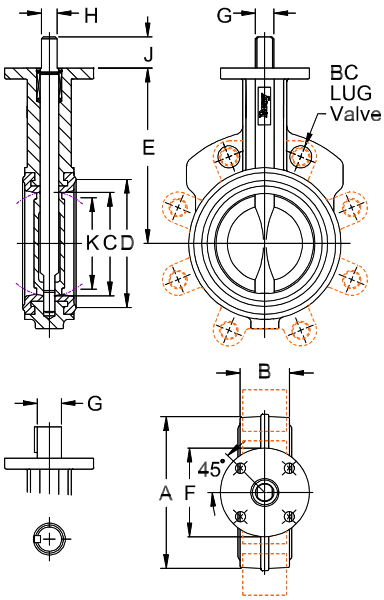

DIMENSIONS

SERIES 30 WAFER

SERIES 31 LUG

Valve Size								Mtg Flange Drilling						
ins	mm	A	B	C	D	E	F	BC	No. Holes	Hole Dia.	G	H	J	K
2	50	3.69	1.62	2.00	2.84	5.50	3.54	2.76	4	.39	.55	.39	1.25	1.32
2½	65	4.19	1.75	2.50	3.34	6.00	3.54	2.76	4	.39	.55	.39	1.25	1.91
3	80	4.88	1.75	3.00	4.03	6.25	3.54	2.76	4	.39	.55	.39	1.25	2.55
4	100	6.06	2.00	4.00	5.16	7.00	3.54	2.76	4	.39	.63	.43	1.25	3.57
5	125	7.12	2.12	5.00	6.16	7.50	3.54	2.76	4	.39	.75	.51	1.25	4.63
6	150	8.12	2.12	5.75	7.02	8.00	3.54	2.76	4	.39	.75	.51	1.25	5.45
8	200	10.50	2.50	7.75	9.47	9.50	5.91	4.92	4	.57	.87	.63	1.25	7.45
10	250	12.75	2.50	9.75	11.47	10.75	5.91	4.92	4	.57	1.18	.87	2.00	9.53
12	300	14.88	3.00	11.75	13.47	12.25	5.91	4.92	4	.57	1.18	.87	2.00	11.47

Lug Bolting Data		
BC	No. Holes	Thrds UNC-2B
4.75	4	5/8-11
5.50	4	5/8-11
6.00	4	5/8-11
7.50	8	5/8-11
8.50	8	3/4-10
9.50	8	3/4-10
11.75	8	3/4-10
14.25	12	7/8-9
17.00	12	7/8-9

Valve Size								Mtg Flange Drilling						
ins	mm	A	B	C	D	E	F	BC	No. Holes	Hole Dia.	G	H	KEY SIZE	K
14	350	17.05	3.00	13.25	15.28	13.62	5.91	4.92	4	.57	1.38	2.00	.39x.39	13.04
16	400	19.21	4.00	15.25	17.41	14.75	5.91	4.92	4	.57	1.38	2.00	.39x.39	14.85
18	450	21.12	4.25	17.25	19.47	16.00	8.27	6.50	4	.81	1.97	2.50	.39x.47	16.85
20	500	23.25	5.00	19.25	21.59	17.25	8.27	6.50	4	.81	1.97	2.50	.39x.47	18.73

Lug Bolting Data		
BC	No. Holes	Thrds UNC-2B
18.75	12	1-8
21.25	16	1-8
22.75	16	1⅛-7
25.00	20	1⅛-7

SELECTION DATA

FLANGE REQUIREMENTS

Bray valves are designed for installation between ANSI Class 125/150 lb. weld-neck or slip-on flanges, BS 10 Tables D&E, BS 4504 NP 10/16, DIN ND 10/16, AS 2129 and JIS 10, either flat faced or raised faced. While weld-neck flanges are recommended, Bray has specifically designed its valve seat to work with slip-on flanges, thus eliminating common failures of other butterfly valve designs. When using raised face flanges be sure to properly align valve and flange. Type C stub-end flanges are not recommended.

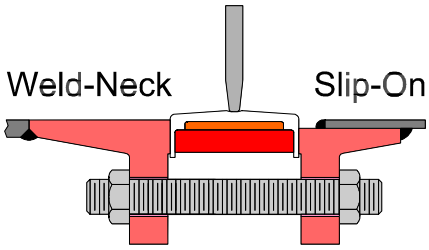

Note: Flanges on both sides of installed valve must be the same type

PRESSURE RATINGS*

For bi-directional bubble-tight shut off, disc in closed position:

Inches	mm	psig	bar
2-12	50-300	175	12
14-20	350-500	150	10

For Dead-end Service Applications: With *downstream flanges installed* or with *vulcanized seats,* the dead-end pressure ratings are equal to valve bi-directional ratings as stated above. With no downstream flanges or with seats that are not vulcanized, the dead-end pressure rating for 2"-12" valves is 75 psi (5 bar) for 14"-20" valves, 50 psi (3.5 bar.)

* Pressure Ratings are based on standard disc diameters. For low pressure application, Bray offers a standard reduced disc diameter to decrease seating torques and to extend seat life, thus increasing the valve's performance and reducing actuator costs for the customer.

VELOCITY LIMITS

For On/Off Services

Fluids - 30 ft/sec (9m/s)

Gases - 175 ft/sec (54m/s)

Cv VALUES-VALVE SIZING COEFFICIENT

Valve Size		Disc Position (degrees)								
ins	mm	90°	80°	70°	60°	50°	40°	30°	20°	10°
2	50	144	114	84	61	43	27	16	7	1
2 1/2	65	282	223	163	107	67	43	24	11	1.5
3	80	461	364	267	154	96	61	35	15	2
4	100	841	701	496	274	171	109	62	27	3
5	125	1376	1146	775	428	268	170	98	43	5
6	150	1850	1542	1025	567	354	225	129	56	6
8	200	3316	2842	1862	1081	680	421	241	102	12
10	250	5430	4525	2948	1710	1076	667	382	162	19
12	300	8077	6731	4393	2563	1594	1005	555	235	27
14	350	10538	8874	5939	3384	2149	1320	756	299	34
16	400	13966	11761	7867	4483	2847	1749	1001	397	45
18	450	17214	14496	10065	5736	3643	2237	1281	507	58
20	500	22339	18812	12535	7144	4536	2786	1595	632	72

Cv is defined as the volume of water in U.S.G.P.M. that will flow through a given restriction or valve opening with a pressure drop of one (1) p.s.i. at room temperature. Recommended control angles are between 25°-70° open. Preferred

EXPECTED SEATING/UNSEATING TORQUES (Lb.-Ins.)

		Full-Rated Pressure Valve				Reduced Disc
Valve Size		rP (PSI)				rP (PSI)
ins	mm	50	100	150	175	50
2	50	125	130	135	140	125
2 1/2	65	195	205	215	220	195
3	80	260	275	290	297	260
4	100	400	425	450	462	267
5	125	615	670	725	755	410
6	150	783	871	953	1003	537
8	200	1475	1650	1825	1915	983
10	250	2240	2520	2800	2940	1493
12	300	3420	3870	4320	4545	2280
14	350	4950	5700	6450	-	3300
16	400	6400	7700	9000	-	4267
18	450	7850	9850	11850	-	5267
20	500	10300	12900	15500	-	6867

Valve Torque Rating - Bray has classified valve torque ratings according to 3 types: non-corrosive lubricating service, general service, and severe service. Torques listed above are for general services.Consult Bray for torque information corresponding to specific application.

TO USE TORQUE CHART, NOTE THE FOLLOWING:

1) For Bray valves, Series 20, 21, 30, 31 and 34.
2) Review Technical Bulletin No. 1001, Expected Seating/Unseating Torque's, for explanation of the 3 service classes and their related seating/unseating torque values for given pressure differentials of Full-Rated and Reduced Disc Diameter valves.
3) Dynamic Torque values are not considered. See Technical Bulletin No. 1002 for evaluation of Dynamic Torque values vs. Seating/Unseating Torque values.
4) Do not apply a safety factor to above torque values when determining actuator output torque requirement.
5) For 3 way assemblies where on valve is opening and other is closing, multiply torque by 1.5 factor.

SELECTION DATA

RECOMMENDED SPECIFICATIONS FOR BRAY SERIES 30/31 SHALL BE:

• Epoxy coated, cast iron, wafer or lug bodies.
• With flange locating holes that meet ANSI 125/150 (or BS 10 tables D&E, BS 4504 NP 10/16, DIN ND 10/16, AS 2129 and JIS 10) drillings.
• Through-stem direct drive double "D" design requiring no disc screws or pins to connect stem to disc with no possible leak paths in disc/stem connection.
• Stem mechanically retained in body neck and no part of stem or body exposed to line media.
• Tongue-and-groove seat design with primary hub seal and a molded o-ring suitable for weld-neck and slip-on flanges. Seat totally encapsulates the body with no flange gaskets required.
• Spherically machined, hand polished disc edge and hub for minimum torque and maximum sealing capability.
• Equipped with non-corrosive bushing and self-adjusting stem seal.
• Bi-directional and tested to 110% of full rating.
• Bi-directional pressure ratings:
2"-12" valves: 175 PSI
14"-20" valves: 150 PSI
Lug bodies for dead end service
With downstream flanges or vulcanized seats, pressure ratings are equal to bi-directional ratings as stated above.
With no downstream flanges or non-vulcanized seats:
2"-12" valves: 75 psi.
14"-20" valves: 50 psi.
• No field adjustment necessary to maintain optimum field performance
• The valve shall be Bray Series 30 wafer / 31 lug or equal.

TEMP. RANGE OF SEATS

Type	Maximum	Minimum
EPDM	+250°F(121°C)	-40°F(-40°C)
Buna-N	+212°F(100°C)	0°F(-18°C)
FKM*	+400°F(204°C)	0°F(-18°C)

MATERIALS SELECTION

2"-20" (50mm-500mm)

BODY:
• Cast Iron ASTM A126 Class B
• Ductile Iron ASTM A536
• Cast Steel ASTM A216 WCB
• Aluminum ASTM B26

SEAT:
• Buna-N - Food Grade
• EPDM - Food Grade
• FKM*
• White Buna-N - Food Grade

STEM:
• Coated Carbon Steel
• 416 SS ASTM A582 Type 416
• 304 SS ASTM A276 Type 304
• 316 SS ASTM A276 Type 316
• Monel

DISC:
• Aluminum Bronze ASTM B148-954
• Coated Ductile Iron ASTM A536 Gr. 65-45-12
• Ductile Iron,Nylon 11 Coated, ASTM A536 Gr. 65-45-12
• Ductile Iron, Halar® Coated, ASTM A536 Gr. 65-45-12
• 316 SS ASTM A351 CF8M
• Hastelloy® C-276 ASTM B575 Alloy N10276

WEIGHTS

Valve Size		Series	Series
ins	mm	30	31
2	50	5.5	7.0
2 1/2	65	7.0	8.0
3	80	7.5	9.0
4	100	11.5	15.0
5	125	14.0	20.0
6	150	17.0	23.0
8	200	34.0	42.0
10	250	49.0	66.0
12	300	67.0	88.0
14	350	95.0	114.0
16	400	135.0	166.0
18	450	200.0	226.0
20	500	260.0	305.0

Weights are in lbs.

COMPONENTS

No.	Qty.	Description
1	1	Body
2	1	Seat
3	1	Disc
4	1	Stem
5	1	Stem Seal
6	1	Stem Bushing
7	2	Stem Retainer
8	1	Thrust Washer
9	1	Retaining Ring

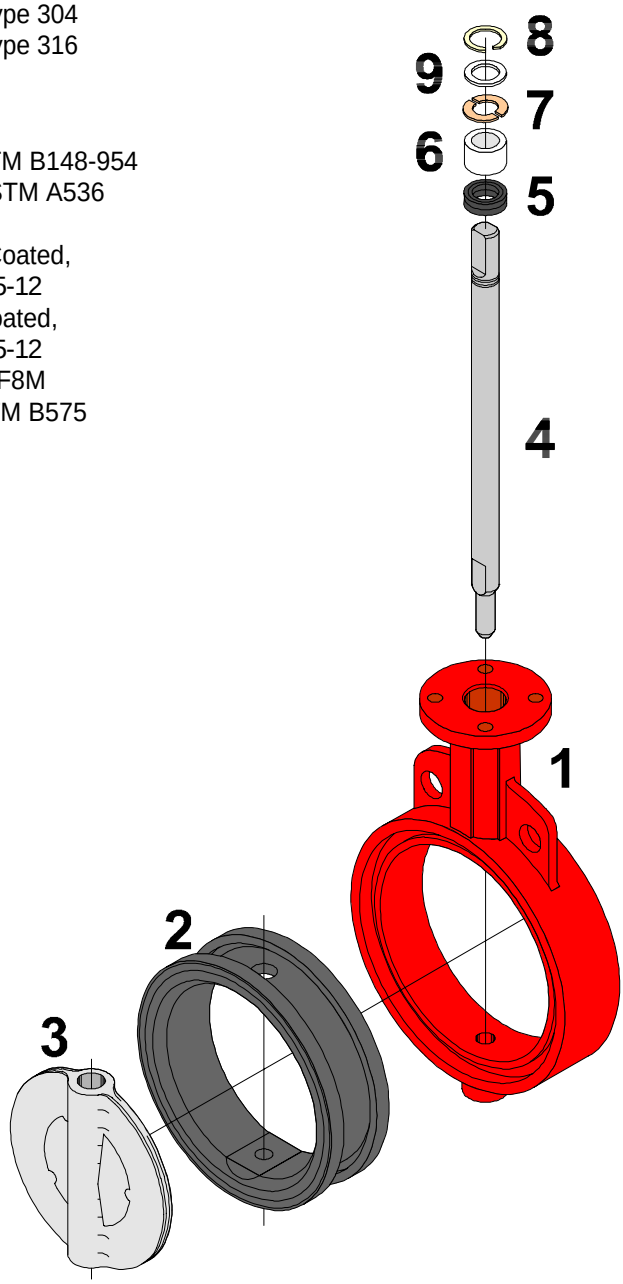

*FKM is the ASTM D1418 designation for Fluorinated Hydrocarbon Elastomers (also called Fluoroelastomers.)
Hastelloy® is a registered trademark of Haynes International, Inc.
Halar® is a registered trademark of Ausimont U.S.A., Inc.

INSTALLATION

Position the disc in the partially open position, maintaining the disc within body face-to-face. Place the body between flanges and install flange bolts. *Do not use flange gaskets.*
Before tightening flange bolts, carefully open the disc to the full open position to ensure proper alignment and clearance of the disc O.D. with the adjacent pipe I.D. Leave disc in the full open position and tighten flange bolts per required specification. Once bolts are tightened, carefully rotate disc to closed position to ensure disc O.D. clearance.

MAINTENANCE AND REPAIR

The many Bray features minimize wear and maintenance requirements. No routine lubrication is required. All components-stem, disc, seat, bushing, stem seal, etc., are field replaceable, no adjustment is needed. If components require replacement, remove the valve from the line by placing the disc near the closed position, spread the flanges, support the valve, then remove the flange bolts. No valve maintenance, including removal of manual or power actuators, should be performed until the piping system is completely depressurized.

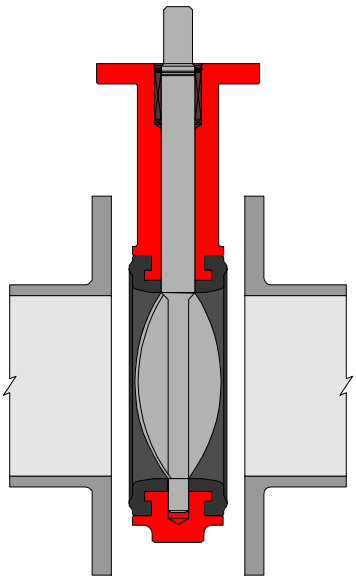

Disc in the Near Closed Position

DISASSEMBLY

Remove handle, gear operator , or actuator from actuator mounting flange. Remove “Spirolox®” retaining ring. Remove stem with its thrust washer and two C-ring stem retainers. Remove bushing and seal. Remove the disc from the seat, protecting disc edge at all times. Push the seat into an oval shape, then remove the seat from the body.

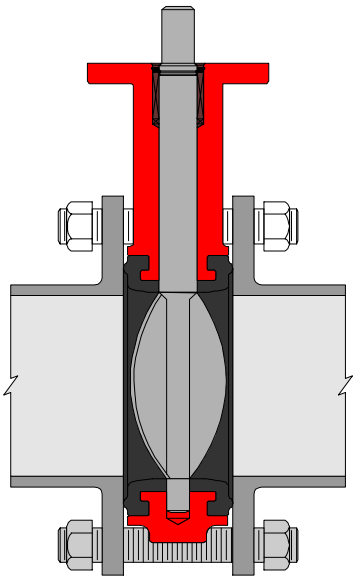

Disc in the Partially Open Position

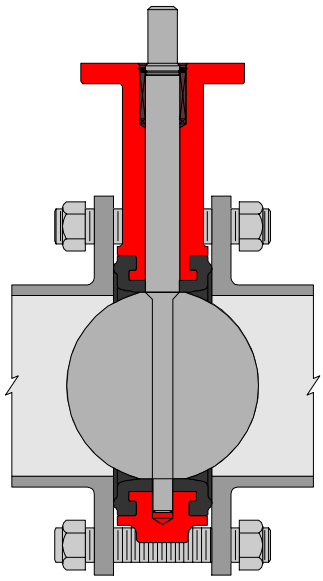

Disc in the Full Open Position

Assembly

Push the valve seat into an oval and push it into the body with seat stem holes aligned to body stem holes. Push stem into the stem hole of body. For aid in inserting disc, slightly protrude stem beyond the I.D. of the top of the seat. Install a light coating of food grade silicone oil (for silicone free applications use soap and water) on the I.D. of seat. Insert the disc into the seat by lining up the disc hole with the stem hole of the seat. Note: the broached double “D” flats in the disc must be toward the bottom of valve body. (Take special care when lining disc up with stem.) With a downward pressure and rotating the stem back and forth, push the stem until the stem touches the bottom of the body stem hole. Make certain that when pushing the stem through disc bottom, the broached flats of stem and disc are aligned. After the stem has engaged the disc, but before the stem is firmly seated in the body, replace the stem seal and bushing. Install the two C-ring stem retainers in the groove in the stem and thrust washer on top of the C-ring. Seat the stem firmly in the body and install the “Spirolox®” retaining ring back into position.

Bray CONTROLS

All statements, technical information, and recommendations in this bulletin are for general use only. Consult Bray representatives or factory for the specific requirements and material selection for your intended application. The right to change or modify product design or product without prior notice is reserved.
Patents applied for in u.S. and foreign countries.
Bray® is a registered trademark of BRAY INTERNATIONAL., Inc.

A Subsidiary of BRAY INTERNATIONAL, INC.
13333 Westland East Blvd., Houston, Texas 77041
Phone: 281. 894.5454 Fax: 281.894.9499
©1995 Bray International. All rights reserved

Bray®

The High Performance Company



Series 92/93 Pneumatic Actuators

Technical Manual

LLOYD'S REGISTER · LRQA
ISO 9001

CE

Bray Series 92/93
Pneumatic Actuators

Technical Manual - Table of Contents

Topic	Page(s)
Installation Notes	3
Mounting Codes	3
Pneumatic Actuator Data	4
Series 92 Torque Data	5
Series 93 Torque Data (Imperial)	6
Series 93 Torque Data (Metric)	7
Series 92/93 Dimensional Data (Imperial)	8
Series 92/93 Dimensional Data (Metric)	9



All statements, technical information, and recommendations in this bulletin are for general use only. Consult Bray representatives or factory for the specific requirements and material selection for your intended application. The right to change or modify product design or product without prior notice is reserved.

Actuator Installation Notes

These notes apply to the installation of Bray S92/93 pneumatic valve actuators.

- Verify that the valve and the actuator are both in the same position (both open or both closed) before mounting the actuator to the valve.
- Apply a light coating of grease to the inside of the actuator output bore before installing the actuator on the valve. This will allow the actuator to be more easily removed from the valve stem even after years of service.
- If stem adapters are required to match the actuator output bore to the valve stem, apply a light coating of grease to the inside of the stem adapter as well as the inside of the actuator output bore.
- Some stem adapters are kits consisting of multiple components. These kits may contain spacers that look like stem adapters, but are designed to keep the stem adapter in place during operation of the actuator. Verify that all stem adapters and spacers are installed in the proper position and sequence.

Refer to Series 92/93 Operations and Technical Manual (OM_S92-93)

- If keyed stem adapters are used, the key must be held in the keyway so that it will not work loose during operation of the actuator. The key may be retained by any one of several methods:

  If the valve stem height matches the depth of the actuator output bore, use a key that fits the full length of the keyway. Tack weld the key to the adapter before installation in the actuator.

  Upset the end of the keyway after the key has been installed in the shaft by using a punch or chisel.
- If mounting studs are used instead of bolts, thread the studs completely into the actuator before placing the actuator on the valve. This assures that the full strength of the connection is achieved.
- While the mounting bolts are only finger tight, cycle the actuator fully open and fully closed to verify proper alignment on the valve.
- Tighten the mounting bolts or nuts in a diagonal pattern to evenly distribute stress in the bolts.

Actuator Mounting Codes for S92/93 - Imperial (In)

Actuator Sizes	Valve Code	Inner Bolt Circle			Outer Bolt Circle			Stem Hole			
		Bolt Circle (+/- .005)	No. Holes	Bolt Size	Bolt Circle (+/- .005)	No. Holes	Bolt Size	Bore Diameter (+/- .004)	Across Flats (+ .002-.0)	Depth	Keyway Width (+ .002-.0)
48	AA	1.42	4	#10-32	1.97	4	1/4-20	0.4	0.32	1.3	NA
63	A	1.969	4	1/4-20	2.756	4	5/16-18	0.552	0.395	1.38	NA
83	C	1.969	4	1/4-20	2.756	4	5/16-18	0.749	0.513	1.46	NA
93	C	1.969	4	1/4-20	2.756	4	5/16-18	0.749	0.513	1.46	NA
119	E	2.756	4	5/16-18	4.921	4	1/2-13	1.182	0.867	2.2	NA
128	E	2.756	4	5/16-18	4.921	4	1/2-13	1.182	0.867	2.2	NA
160A	E	NA	NA	NA	4.921	4	1/2-13	1.182	0.867	2.2	NA
160B	F	NA	NA	NA	4.921	4	1/2-13	1.38	NA	2.38	0.394
210	G	4.921	4	1/2-13	6.496	4	5/8-11	1.97	NA	2.76	0.472
255A	H	6.496	4	M20 x 2.5P	4.724 X 7.874	4	M20 x 2.5P	2.505	NA	4.25	0.625
255B	K	6.496	4	M20 x 2.5P	4.724 X 7.874	4	M20 x 2.5P	3.006	NA	4.25	0.750

Actuator Mounting Codes for S92/93 - Metric (mm)

Actuator Sizes	Valve Code	Inner Bolt Circle			Outer Bolt Circle			Stem Hole			
		Bolt Circle (+/- .127)	No. Holes	Bolt Size	Bolt Circle (+/- .127)	No. Holes	Bolt Size	Bore Dia. (+/-.102)	Across Flats (+ .050-.0)	Depth	Keyway Width
48	AA	36	4	M5 x 0.8P	50	4	M6 x 1.0P	10	8	33	NA
63	A	50	4	M6 x 1.0P	70	4	M8 x 1.25P	14	10	35	NA
83	C	50	4	M6 x 1.0P	70	4	M8 x 1.25P	19	13	37	NA
93	C	50	4	M6 x 1.0P	70	4	M8 x 1.25P	19	13	37	NA
119	E	70	4	M8 x 1.25P	125	4	M12 x 1.75P	30	22	56	NA
128	E	70	4	M8 x 1.25P	125	4	M12 x 1.75P	30	22	56	NA
160A	E	NA	NA	NA	125	4	M12 x 1.75P	30	22	56	NA
160B	F	NA	NA	NA	125	4	M12 x 1.75P	35	NA	60	10
210	G	125	4	M12 x 1.75P	165	4	M20 x 2.5P	50	NA	70	12
255A	H	165	4	M20 x 2.5P	120 x 200	4	M20 x 2.5P	64	NA	108	16
255B	K	165	4	M20 x 2.5P	120 x 200	4	M20 x 2.5P	76	NA	108	19

All information herein is proprietary and confidential and may not be copied or reproduced without the expressed written consent of BRAY INTERNATIONAL, Inc. The technical data herein is for general information only. Product suitability should be based solely upon customer's detailed knowledge and experience with their application.

Pneumatic Actuator Data (Imperial)

Approximate Actuator Speeds (Seconds)									
Size	**48**	**63**	**83**	**93**	**119**	**128**	**160**	**210**	**255**
90° Travel	1/4	1/4	1/4	1/4	1/2	1/2	1	2	2 3/4

Note: Times shown are in seconds at 80 PSIG supply pressure with 6ft. tubing having an internal diameter of not less than approximately 1/4" using a Bray Series 62 or Series 63 solenoid. Bray S92/93 actuation times are very dependent on the flow capacity of their air supply. The use of smaller port solenoids, solenoid manifolds, smaller I.D. air supply tubing and/or extended lengths of tubing can significantly reduce the actuation time and/or initial response to the command signal.

Actuator Weights (lbs)									
Size	**48**	**63**	**83**	**93**	**119**	**128**	**160**	**210**	**255**
Double Acting	2.0	3.3	6.3	8.5	18.0	21.5	39.0	78.0	143.5
Spring Return	2.3	3.9	8.1	10.9	23.4	28.1	53.4	111.0	214.9

Weights are in lbs. Spring Return unit weights are with full set of springs on each piston.

Actuator Volumes (in^3)									
Size	**48**	**63**	**83**	**93**	**119**	**128**	**160**	**210**	**255**
Counter-Clockwise	5.7	9.6	24.8	39.0	81.0	106.5	187.5	360.0	750.0
Clockwise	4.8	13.4	32.6	50.1	102.7	140.6	259.6	450.0	900.0

Counter-clockwise: Air volume in cubic inches required to push pistons apart, full travel.
Clockwise: Air volume in cubic inches required to push pistons together, full travel.

Pneumatic Actuator Data (Metric)

Approximate Actuator Speeds (Seconds)									
Size	**48**	**63**	**83**	**93**	**119**	**128**	**160**	**210**	**255**
90° Travel	1/4	1/4	1/4	1/4	1/2	1/2	1	2	2 3/4

Note: Times shown are in seconds at 5.5 bar supply pressure with 1.8 meter tubing having an internal diameter of not less than approximately (6.35 mm)using a Bray Series 62 or Series 63 solenoid. Bray S92/93 actuation times are very dependent on the flow capacity of their air supply. The use of smaller port solenoids, solenoid manifolds, smaller I.D. air supply tubing and/or extended lengths of tubing can significantly reduce the actuation time and/or initial response to the command signal.

Actuator Weights (kg)									
Size	**48**	**63**	**83**	**93**	**119**	**128**	**160**	**210**	**255**
Double Acting	0.9	1.5	2.9	3.9	8.2	9.8	17.7	35.4	65.1
Spring Return	1.0	1.8	3.7	4.9	10.6	12.7	24.2	50.3	115.7

Weights are in kg Spring Return unit weights are with full set of springs on each piston.

Actuator Volumes (cm^3)									
Size	**48**	**63**	**83**	**93**	**119**	**128**	**160**	**210**	**255**
Counter-Clockwise	93.4	157.3	406.4	638.6	1327.5	1744.5	3072.6	5899.3	12290.3
Clockwise	78.7	219.6	534.2	820.5	1683.1	2303.3	4254.1	7374.2	14748.4

Counter-clockwise: Air volume in cubic millimeters required to push pistons apart, full travel.
Clockwise: Air volume in cubic millimeters required to push pistons together, full travel.

All information herein is proprietary and confidential and may not be copied or reproduced without the expressed written consent of BRAY INTERNATIONAL, Inc. The technical data herein is for general information only. Product suitability should be based solely upon customer's detailed knowledge and experience with their application.

STANDARD MATERIALS SELECTION	
Name	**Material**
Body	Extruded Aluminum Alloy, Anodized 316 Stainless Steel
End Caps	Die cast Aluminum Alloy with Corrosion Resistant Polyester Coating 316 Stainless Steel
Pistons	Die Cast Aluminum Alloy
Output Shaft/Pinion:	Carbon Steel, Zinc Plated
Travel Stop:	Alloy Steel
Shaft Bearings:	Acetal
Piston Guides:	Acetal
Fasteners:	Stainless Steel
Springs	Spring Steel, Protective Coating
Piston O-Ring Seals:	Buna-N
Options:	Polyester Coated Body Exterior Electroless Nickel Plated Body Exterior Hard Anodized Body Exterior Seacorr Coated Body Exterior Stainless Steel Pinion

OPERATING CONDITIONS	
Pressure Range	40 - 140 psi (2.8 - 10 bar)
Media	Dry Compressed Air/Inert Gas* **Contact Factory for other media.*
Temperature Range	Standard -4° F to 200° F (-20° C to 93° C)
	Low -40° F to 176° F (-40° to 80° C)
	High 0° F to 300° F (-18° C to 149° C)
Note: Cycle life on Low and High temperature seal kits reduced compared to Standard Buna N Seals	
Series 92 Double Acting	Available in 90°, 135°, 180° Rotation
Series 93 Spring Return	Available in 90° Rotation Operating Pressure 140 psig (10 bar) maximum

COMPLIANCES	
Torque Base	Mounting Dimensions as per ISO 5211: 2001(E)
Accessories	Shaft Driven Accessories Mounting per NAMUR-VDE
Performance Testing	EN 15714-3:2009
Ingress Protection	IP66/IP67M per IEC 60529
Safety	ATEX, SIL 3 suitable, PED

Series 92 Torque Data

Series 92 Actuator Torque Data (Lb-in)

Double Acting Pneumatic Operated, Torque Output

Actuator Size	Air Supply Pressure (PSIG)				
	40	60	80	100	120
48	75	113	150	188	225
63	145	221	297	373	449
83	351	536	721	906	1091
93	493	753	1013	1272	1532
119	1058	1615	2171	2728	3285
128	1410	2152	2894	3636	4378
160	2797	4270	5742	7214	8687
210	5783	8826	11870	14914	17957
255	14211	21691	29171	36650	44130

Series 92 Actuator Torque Data (N-m)

Double Acting Pneumatic Operated, Torque Output

Actuator Size	Air Supply Pressure (Bar)				
	2.8	4.1	5.5	6.9	8.3
48	9	13	17	21	25
63	16	25	34	42	51
83	40	61	82	102	123
93	56	85	115	144	173
119	120	183	245	308	371
128	159	243	327	411	495
160	316	482	649	815	982
210	653	997	1341	1685	2029
255	1606	2451	3296	4141	4986

All information herein is proprietary and confidential and may not be copied or reproduced without the expressed written consent of BRAY INTERNATIONAL, Inc. The technical data herein is for general information only. Product suitability should be based solely upon customer's detailed knowledge and experience with their application.

Series 93 Actuator Torque Data (Lb-In) Air Operated, With Spring Return, Torque Output

Actuator Size	No. Springs per Piston	Air Supply Pressure (PSIG)										Spring	
		40		60		80		100		120		Spring Start	Stroke End
		Start	End	Start	End	Start	End	Start	End	Start	End		
48	1	51	32	89	70	126	107	164	145	201	182	43	24
	2/1	39	10	77	48	114	85	152	123	189	160	65	36
	2			64	27	101	64	139	102	176	139	86	49
	3/2			52	5	89	42	127	80	164	117	108	61
	3					77	21	115	59	152	96	129	73
63	2	91	65	167	141	243	217	319	293	395	369	80	54
	3	64	27	140	103	216	179	292	255	368	331	118	81
	4			113	65	189	141	265	217	341	293	156	108
	5			86	27	162	103	238	179	314	255	194	135
	6					135	65	211	141	287	217	232	162
83	2	210	167	395	352	580	537	765	722	950	907	184	141
	3	156	76	341	261	526	446	711	631	896	816	275	195
	4			281	176	466	361	651	546	836	731	360	255
	5			220	97	405	282	590	467	775	652	439	316
	6					369	185	554	370	739	555	536	352
93	2	310	232	570	492	830	752	1089	1011	1349	1271	261	183
	3	218	101	478	361	738	621	997	880	1257	1140	392	275
	4			386	231	646	491	905	750	1165	1010	522	367
	5			294	94	554	354	813	613	1073	873	659	459
	6					462	229	721	488	981	748	784	551
119	2	692	469	1249	1026	1805	1582	2362	2139	2919	2696	589	366
	3	509	174	1066	731	1622	1287	2179	1844	2736	2401	884	549
	4			883	437	1439	993	1996	1550	2553	2107	1178	732
	5			700	142	1256	698	1813	1255	2370	1812	1473	915
	6					1073	404	1630	961	2187	1518	1767	1098
128	2	880	465	1622	1207	2364	1949	3106	2691	3848	3433	945	530
	3			1357	733	2099	1475	2841	2217	3583	2959	1419	795
	4			1094	261	1836	1003	2578	1745	3320	2487	1891	1058
	5					1568	529	2310	1271	3052	2013	2365	1326
	6					1302	57	2044	799	2786	1541	2837	1592
160	2	1819	1118	3292	2591	4764	4063	6236	5535	7709	7008	1679	978
	3	1399	349	2872	1822	4344	3294	5816	4766	7289	6239	2448	1398
	4			2452	1123	3924	2595	5396	4067	6869	5540	3147	1818
	5			2030	353	3502	1825	4974	3297	6447	4770	3917	2240
	6					3154	1196	4626	2668	6099	4141	4546	2588
210	2	3833	2508	6876	5551	9920	8595	12964	11639	16007	14682	3275	1950
	3	2859	868	5902	3911	8946	6955	11990	9999	15033	13042	4915	2924
	4			4930	2275	7974	5319	11018	8363	14061	11406	6551	3896
	5			3949	638	6993	3682	10037	6726	13080	9769	8188	4877
	6					6022	2031	9066	5075	12109	8118	9839	5848
255	2	9487	6747	16967	14227	24447	21707	31926	29186	39406	36666	7464	4724
	3	7125	3015	14605	10495	22085	17975	29564	25454	37044	32934	11196	7086
	4			12243	6762	19723	14242	27202	21721	34682	29201	14929	9448
	5			9880	3030	17360	10510	24839	17989	32319	25469	18661	11811
	6					14998	6778	22477	14257	29957	21737	22393	14173

All information herein is proprietary and confidential and may not be copied or reproduced without the expressed written consent of BRAY INTERNATIONAL, Inc. The technical data herein is for general information only. Product suitability should be based solely upon customer's detailed knowledge and experience with their application.

Series 93 Actuator Torque Data (N-m) Air Operated, With Spring Return, Torque Output

Actuator Size	No. Springs per Piston	Air Supply Pressure (Bar)										Spring	
		2.8		4.1		5.5		6.9		8.3		Spring Start	Stroke End
		Start	End	Start	End	Start	End	Start	End	Start	End		
48	1	6	4	10	8	14	12	19	16	23	21	5	3
	2/1	4	1	9	5	13	10	17	14	21	18	7	4
	2			7	3	11	7	16	12	20	16	10	6
	3/2			6	1	10	5	14	9	19	13	12	7
	3					9	2	13	7	17	11	15	8
63	2	10	7	19	16	28	25	36	33	45	42	9	6
	3	7	3	16	12	24	20	33	29	42	37	13	9
	4			13	7	21	16	30	25	39	33	18	12
	5			10	3	18	12	27	20	36	29	22	15
	6					15	7	24	16	32	25	26	18
83	2	24	19	45	40	66	61	86	82	107	103	21	16
	3	18	9	39	30	59	50	80	71	101	92	31	22
	4			32	20	53	41	74	62	95	83	41	29
	5			25	11	46	32	67	53	88	74	50	36
	6					42	21	63	42	84	63	61	40
93	2	35	26	64	56	94	85	123	114	152	144	30	21
	3	25	11	54	41	83	70	113	99	142	129	44	31
	4			44	26	73	56	102	85	132	114	59	42
	5			33	11	63	40	92	69	121	99	75	52
	6					52	26	82	55	111	85	89	62
119	2	78	53	141	116	204	179	267	242	330	305	67	41
	3	58	20	120	83	183	145	246	208	309	271	100	62
	4			100	49	163	112	226	175	289	238	133	83
	5			79	16	142	79	205	142	268	205	166	103
	6					121	46	184	109	247	172	200	124
128	2	99	53	183	136	267	220	351	304	435	388	107	60
	3			153	83	237	167	321	251	405	334	160	90
	4			124	30	207	113	291	197	375	281	214	120
	5					177	60	261	144	345	227	267	150
	6					147	6	231	90	315	174	321	180
160	2	206	126	372	293	538	459	705	625	871	792	190	111
	3	158	39	325	206	491	372	657	539	824	705	277	158
	4			277	127	443	293	610	460	776	626	356	205
	5			229	40	396	206	562	373	728	539	443	253
	6					356	135	523	301	689	468	514	292
210	2	433	283	777	627	1121	971	1465	1315	1809	1659	370	220
	3	323	98	667	442	1011	786	1355	1130	1699	1474	555	330
	4			557	257	901	601	1245	945	1589	1289	740	440
	5			446	72	790	416	1134	760	1478	1104	925	551
	6					680	230	1024	573	1368	917	1112	661
255	2	1072	762	1917	1607	2762	2453	3607	3298	4452	4143	843	534
	3	805	341	1650	1186	2495	2031	3340	2876	4185	3721	1265	801
	4			1383	764	2228	1609	3073	2454	3919	3299	1687	1068
	5			1116	342	1961	1188	2806	2033	3652	2878	2108	1335
	6					1695	766	2540	1611	3385	2456	2530	1601

All information herein is proprietary and confidential and may not be copied or reproduced without the expressed written consent of BRAY INTERNATIONAL, Inc. The technical data herein is for general information only. Product suitability should be based solely upon customer's detailed knowledge and experience with their application.

S92 Double Acting/S93 Spring Return

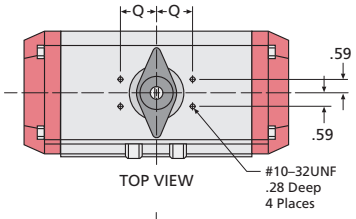

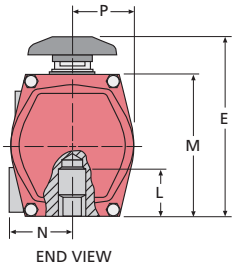

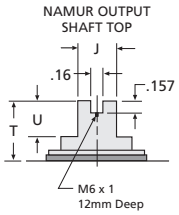

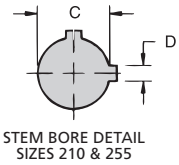

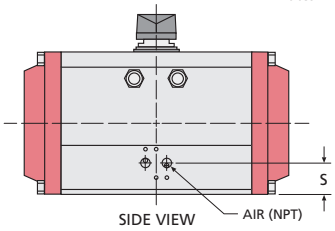

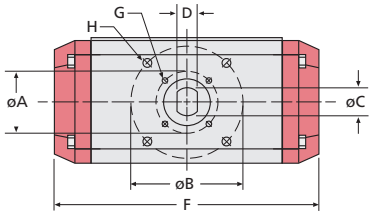

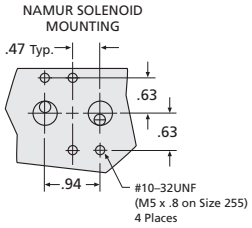

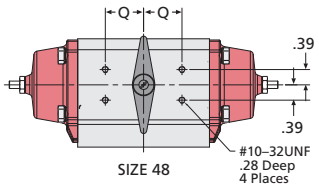

IMPERIAL DIMENSIONS - Inches

Size	48	63	83	93	119	128	160*	210	255‡
Air NPT	1/8	1/4	1/4	1/4	1/4	1/4	1/4	1/4	1/4
A ISO "F"†	1.42 - F 03	1.97-F 05	1.97 - F 05	1.97 - F 05	2.76 - F 07	2.76 - F 07	—	4.92 - F 12	6.50 - F 16
B ISO "F"†	1.97 - F 05	2.76 - F 07	2.76 - F 07	2.76 - F 07	4.92 - F 12	4.92 - F 12	4.92 - F 12	6.50 - F 16	7.87x4.72 Rect.
C	.55	.55	.75	.75	1.18	1.18	1.18	1.97	2.50
D	.40	.40	.51	.51	.87	.87	.87	.47	.62
E	3.88	4.53	5.43	5.78	7.28	8.09	9.36	11.62	13.49
F	4.38	5.58	7.40	9.10	12.40	12.81	15.54	19.57	28.78
G (UNC)	#10-32 x .23	1/4-20 x .32	1/4-20 x .32	1/4-20 x .32	5/16-18 x .46	5/16-18 x .46	—	1/2-13 x .78	M20 x 2.5 x 30mm
H (UNC)	1/4-20 x .25	5/16-18 x .40	5/16-18 x .40	5/16-18 x .40	1/2-13 x .69	1/2-13 x .69	1/2-13 x .75	5/8-11 x 1.11	M20 x2.5 x 30mm
J	.38	.38	.50	.50	1.12	1.12	1.12	1.12	1.12
L	1.38	1.38	1.46	1.46	2.20	2.20	2.20	4.72	6.50
M	2.50	3.46	4.27	4.61	5.52	6.32	7.80	10.16	12.06
N	1.60	1.72	2.28	2.47	2.78	2.88	3.78	4.56	5.40
P	1.18	1.38	1.79	1.97	2.37	2.70	3.39	4.41	5.39
Q	.98**	1.58	1.58	1.58	1.58	1.58	2.56	2.56	2.56
S	1.25	.89	1.26	1.32	1.64	1.64	2.26	2.45	2.48
T	1.10**	.79	.79	.79	.79	.79	1.18	1.18	1.18
U	.47	.47	.47	.47	.47	.47	.75	.75	.75

Note: Double Acting and Spring Return actuators have the same overall dimensions. The double acting unit of the size 48 actuator is optionally available with flat end caps with an F dimension of 4.00
† ISO "F" means mounting flange-drilling pattern.
* Dimensions for Size 160A in table. Size 160B (keyed stem version) has C dimension of 1.38 and D dimension of .39
‡ Dimensions for Size 255A in table. Size 255B actuator has a C dimension of 3.00 and D dimension of .75
** Size 48 has a Q dimension of 1.58 and a T dimension of .79 with use of NAMUR top plate.

WEIGHTS - lbs - Spring Return unit weights are with full set of springs on each piston.

Size	48	63	83	93	119	128	160	210	255
Double Acting	2.0	3.4	6.3	8.5	16.9	21.0	38.8	77.8	167.0
Spring Return	2.4	4.10	8.1	10.8	22.3	27.6	53.2	109.6	210.8

Drawings are for reference only. Please refer to Bray ES drawings on the Bray website, www.bray.com. Bray reserves the right to change product dimensions without notice.

All information herein is proprietary and confidential and may not be copied or reproduced without the expressed written consent of BRAY INTERNATIONAL, Inc. The technical data herein is for general information only. Product suitability should be based solely upon customer's detailed knowledge and experience with their application.

S92 Double Acting/S93 Spring Return

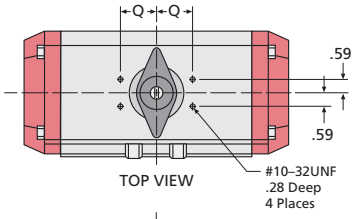

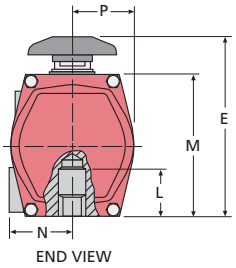

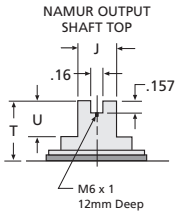

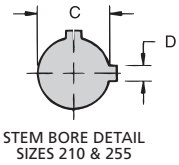

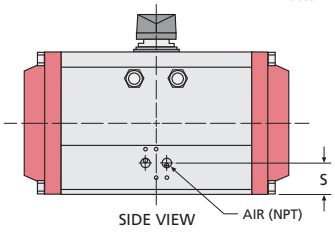

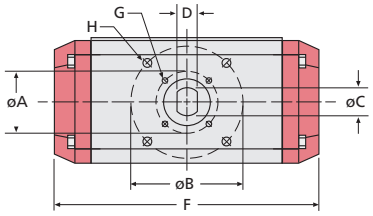

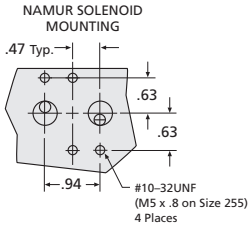

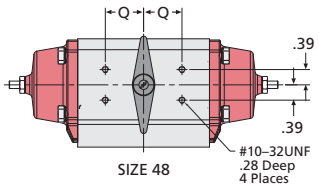

METRIC DIMENSIONS - Millimeters

Size	48	63	83	93	119	128	160*	210	255‡
Air NPT	1/8	1/4	1/4	1/4	1/4	1/4	1/4	1/4	1/4
A ISO "F"†	36 - F 03	50 - F 05	50 - F 05	50 - F 05	70 - F 07	70 - F 07	—	125 - F 12	165 - F 16
B ISO "F"†	50 - F 05	70 - F 07	70 - F 07	70 - F 07	125 - F 12	125 - F 12	125 - F 12	165 - F 16	200 x 120 Rect.
C	14	14	19	19	30	30	30	50	64
D	10	10	13	13	22	22	22	12	16
E	99	115	138	147	185	205	238	295	343
F	111	142	188	231	315	254	395	497	731
G	#10-32 x .23in	M6x1.0 x 8mm	M6x1.0 x 8mm	M6x1.0 x 8mm	M8x1.25P x 12 mm	M8x1.25P x 12 mm	N/A	M12x1.75P x 19m	M20x2.5P x 30mm
H	1/4-20 x .25in	M8x1.25P x 10mm	M8x1.25P x 10mm	M8x1.25P x 10mm	M12x1.75P x 18mm	M12x1.75P x 18mm	M12x1.75P x 18mm	M20x2.5P x 30mm	M20x2.5P x 30mm
J	10	10	13	13	28	28	28	28	28
L	35	35	37	37	56	56	56	120	165
M	64	88	108	117	140	161	198	258	306
N	41	44	58	63	71	73	96	116	137
P	30	35	45	50	60	69	86	112	137
Q	25**	40	40	40	40	40	65	65	65
S	32	23	32	34	42	42	57	62	63
T	28**	20	20	20	20	20	30	30	30
U	12	12	12	12	12	12	19	19	19

Note: Double Acting and Spring Return actuators have the same overall dimensions. The double acting unit of the size 48 actuator is optionally available with flat end caps with an F dimension of 102mm

† ISO "F" means mounting flange-drilling pattern.

* Dimensions for Size 160A in table. Size 160B (keyed stem version) has C dimension of 35mm and D dimension of 10mm

‡ Dimensions for Size 255A in table. Size 255B actuator has a C dimension of 76mm and D dimension of 19mm

** Size 48 has a Q dimensions of 40mm and a T dimension of 20mm with use of NAMUR top plate.

WEIGHTS - Kilograms - Spring Return unit weights are with full set of springs on each piston.

Size	48	63	83	93	119	128	160	210	255
Double Acting	0.9	1.5	3	4	8	10	18	35	76
Spring Return	1.1	1.9	4	5	10	13	24	50	96

Drawings are for reference only. Please refer to Bray ES drawings on the Bray website, www.bray.com. Bray reserves the right to change product dimensions without notice.

All information herein is proprietary and confidential and may not be copied or reproduced without the expressed written consent of BRAY INTERNATIONAL, Inc. The technical data herein is for general information only. Product suitability should be based solely upon customer's detailed knowledge and experience with their application.

Bray®

Bray® CONTROLS

Division of BRAY INTERNATIONAL, Inc.
13333 Westland East Blvd. Houston, Texas 77041
281.894.5454 FAX 281.894.9499 www.bray.com

Bray® is a registered trademark of BRAY INTERNATIONAL, Inc.
© 2019 Bray International. All rights reserved. TM-1056-EN-02-28-19

Series 63 Solenoid Valve

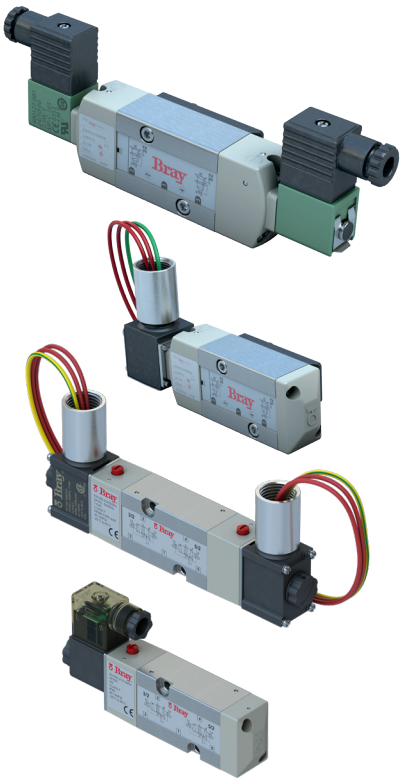

FEATURES

- Compact and modular design
- Pilot operated spool control valve
- Convertible from 3-way (3/2) to 4-way (5/2)
- Mechanical manual override

TECHNICAL DATA

Materials of Construction		
Body	Anodized Aluminum	
Spring	Phosphate treated black steel	
Shading Coil	Copper	
Seals	NBR + PUR	
Core / Tube	Stainless / Brass	
End Covers & Plate	6/6 glass filled polyamide (PA/FV)	
Spool	Aluminum	
Internal Parts	Zamak, Steel, Acetal	
General Specifications		
Mounting	NAMUR VDI/VDE 3845, hardware included	
Pneumatic Ports	1/4" NPT G1/4 available for DIN Models	
Media	Filtered Air or Inert Gas	
Connections	NPT flying leads or DIN Form B Type I connections offered, both available with single and dual coils	
Electrical Connections	NEMA Housings: 1/2" NPT connection and flying leads	
	DIN Housing: Cable Gland PG9 and M15 threaded connector	
Coil Temperature Rating	Insulation Class "F", Max. 311°F [155°C]	
General Purpose (watertight)	NEMA 4, 4X (Flying Leads)	
	IP65 (DIN coil)	
Model Specifications	**High-flow**	**UL-Recognized**
Hazardous Locations (Optional)	—	NEMA 7, 9 Class I, Division 1 (Groups A-D) Class II, Division 1 (Groups E-G)
Temperature Range	-13°F to +140°F [-25°C to +60°C]	AC: -13°F to +140°F [-25°C to +60°C]
		DC: -13°F to +77°F [-25°C to +25°C]
Coil Voltage	Flying Leads & DIN 24, 110, 220 VAC, 50-60 HZ; 12, 24 VDC	Flying Leads: 24, 120, 220 VAC, 50-60 HZ; 12, 24 VDC
		DIN: 24, 120, 240 VAC, 50-60 HZ; 24 VDC
Nominal Power	4.5VA (24VAC); 6VA (110VAC); 7.5VA (220VAC); 4.5W (12 VDC); 3W (24VDC)	Flying Leads: 7VA (AC); 6.9W (DC)
		DIN: 3.5VA (AC); 3.0W (DC)
Flow Coefficient (1/4" pipe)	Cv=1.4	Cv=0.7
Operating Pressure	Min. 22 psi [1.5 bar] Max. 130 psi [9 bar]	Min. 30 psi [2 bar] Max. 130 psi [9 bar]
Operating Speed	5 cycles per minute	10 cycles per minute
Certifications	cCSAus (Flying Leads), CE (DIN coil)	UL, CSA, CE (DIN coil)

DIMENSIONS

DIN Solenoid

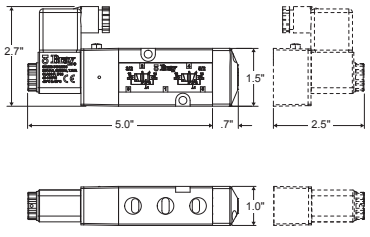

NEMA Solenoid

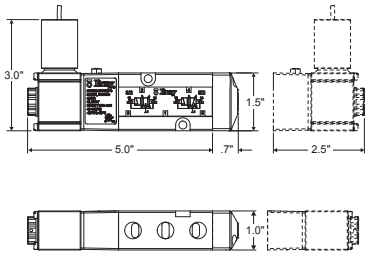

Note: Some dimensions may vary depending on model.

All information herein is proprietary, confidential, and may not be copied or reproduced without the expressed written consent of BRAY INTERNATIONAL, Inc.
The technical data herein is for general information only. Product suitability should be based solely upon customer's detailed knowledge and experience with their application.

PNEUMATIC SCHEMATICS

3/2 Operation

Single Coil

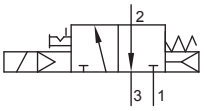

Dual Coil

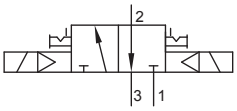

5/2 Operation

Single Coil

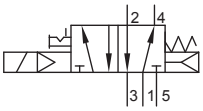

Dual Coil

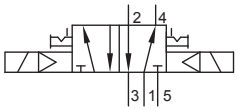

ELECTRICAL CONNECTION

DIN 43650B

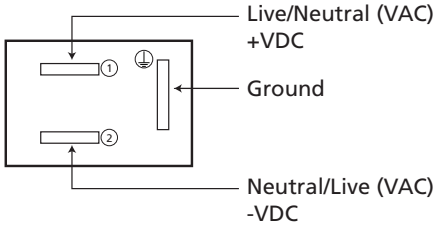

Flying Leads

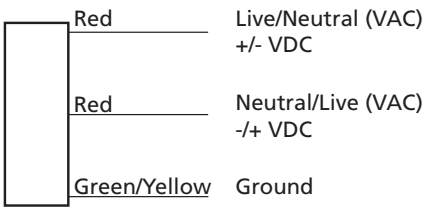

ACCESSORIES

Connector	Description
600250-71106533	Form B Type I Plug Connector (DIN 43650) with Cable Gland PG9
600500-71106533	Form B Type I Plug Connector (DIN 43650) with 1/2" NPT Female Connection
090004-76146533	Form B Type I Plug Connector (DIN 43650), LED and Surge Protected 110-220 VAC, to Flying Leads, 4 meters
090004-76147533	Form B Type I Plug Connector (DIN 43650), LED and Surge Protected 24-30 VDC, to Flying Leads, 4 meters
600250-23663536	Y-Connector Cordset - Form B Type I Plug Connector (DIN 43650) to M12 female straight connector (4-pin sensor side) AND M12 male straight connector (5-pin system side)
600250-23667536	Y-Connector Cordset - Form B Type I Plug Connector (DIN 43650) to 7/8" female straight connector (5- pin sensor side) AND 7/8" male straight connector (6-pin system side)
090001-76159882	S-Connector Cordset - Form B Type I Plug Connector (DIN 43650) to M12 male right angle (2-pins + PE), 0.6 meters

HEADQUARTERS
Bray International, Inc.
13333 Westland East Blvd.
Houston, Texas 77041
Tel: 281.894.5454
bray.com

All statements, technical information, and recommendations in this bulletin are for general use only. Consult Bray representatives or factory for the specific requirements and material selection for your intended application. The right to change or modify product design or product without prior notice is reserved. Patents issued and applied for worldwide.

Bray® is a registered trademark of Bray International, Inc.

© 2020 Bray International, Inc. All rights reserved.

20-FCV-301-1/2/3/4

DEZURIK R3 POWERRAC® CYLINDER ACTUATOR

Instruction D10359
November 2020

DeZURIK, Inc. Sartell, Minnesota USA | Phone: 320-259-2000 | www.dezurik.com | info@dezurik.com

Instructions

These instructions are for use by personnel who are responsible for the installation, operation and maintenance of DeZURIK valves, actuators or accessories.

Safety Messages

All safety messages in the instructions are identified by a general warning sign and the signal word CAUTION, WARNING or DANGER. These messages indicate procedures to avoid injury or death.

Safety label(s) on the product indicate hazards that can cause injury or death. If a safety label becomes difficult to see or read, or if a label has been removed, please contact DeZURIK for replacement label(s).

⚠WARNING

Personnel involved in the installation or maintenance of valves should be constantly alert to potential emission of pipeline material and take appropriate safety precautions. Always wear suitable protection when dealing with hazardous pipeline materials. Handle valves which have been removed from service with suitable protection for any potential pipeline material in the valve.

Inspection

Your DeZURIK product has been packaged to provide protection during shipment; however, items can be damaged in transport. Carefully inspect the unit for damage upon arrival and file a claim with the carrier if damage is apparent.

Parts

Replaceable wear parts are listed on the assembly drawing. These parts can be stocked to minimize downtime. Order parts from your local DeZURIK sales representative or directly from DeZURIK. When ordering parts please provide the following information:

If the valve has a data plate: please include the 7-digit part number with either 4-digit revision number (example: 9999999R000) or 8-digit serial number (example: S1900001) whichever is applicable. The data plate will be attached to the valve assembly. Also, include the part name, the assembly drawing number, the balloon number and the quantity stated on the assembly drawing.

If there isn't any data plate visible on the valve: please include valve model number, part name, and item number from the assembly drawing. You may contact your local DeZURIK Representative to help you identify your valve.

DeZURIK Service

DeZURIK service personnel are available to maintain and repair all DeZURIK products. DeZURIK also offers customized training programs and consultation services. For more information, contact your local DeZURIK sales representative or visit our website at DeZURIK.com.

 © 2022 DeZURIK, Inc.

Table of Contents

Description 4
Installation 4
Operation 4
Lubrication 4
Open and Closed Position Stops 4
Removing Actuator From Valve 7
Actuator Disassembly 7
Actuator Reassembly 8
Mounting Actuator on Valve 10
Changing Mounting Position of Actuator on Valve 11
Lockable Model 11
  Unlocked Condition 12
  Locked: Closed Position 12
  Locked: Open Position 12
Troubleshooting 15

Description

The R3 PowerRac Cylinder Actuator is a quarter-turn double-acting enclosed rack and gear cylinder actuator. The actuator is used for on-off or modulating control of butterfly valves and other valves that have a square or double-D shaft connection. A choice of an 8" (200 mm) or a 10" (250 mm) diameter cylinder is offered. A lockable model is available as an option.Installation

The actuator requires two pneumatic connections— one to each port on opposite ends of the cylinder. Air to the connection closest to the actuator drives the actuator clockwise, towards the “shut” position on the dial; air to the connection farthest from the actuator drives the actuator counterclockwise, towards the “open” position on the dial. The 8" (200 mm) cylinder has ½" NPT connections, and the 10" (250 mm) cylinder has ¾" NPT connections.

Operation

The R3 PowerRac Cylinder Actuator is powered pneumatically, and rotates 90° between the open and closed positions. The cylinder is sized for 60 psi or 80 psi (415 kPa or 550 kPa), and is limited to 100 psi (690 kPa) maximum.

Lubrication

The R3 PowerRac Cylinder Actuator is lubricated at the factory, and does not require routine maintenance lubrication. If the actuator is disassembled, lubrication is required as described in the *Actuator Reassembly* section.

Open and Closed Position Stops

The adjustable open and closed position stops prevent the actuator from rotating beyond the open and closed positions of the valve. If the actuator is factory-mounted on the valve, the stops are preset, and do not require further adjustment. If the actuator is not factory-mounted on the valve, or if the actuator is removed and/or disassembled, the stops will require adjustment as described below. Refer to the Valve Instructions for closed-position information, and adjust the stop screws after the actuator is mounted on the valve.

The adjustable stop screws are secured with jam nuts, and are located in the extreme ends of the actuator as shown in Figures 1 and 2. The closed position stop is located in the cylinder cap, and the open position stop is located in the end cover. To adjust either stop screw, loosen the jam nut and turn the screw counterclockwise to increase the stroke, or clockwise to decrease the stroke. After the stop is adjusted to the desired position, hold the screw from turning, and tighten the jam nut.

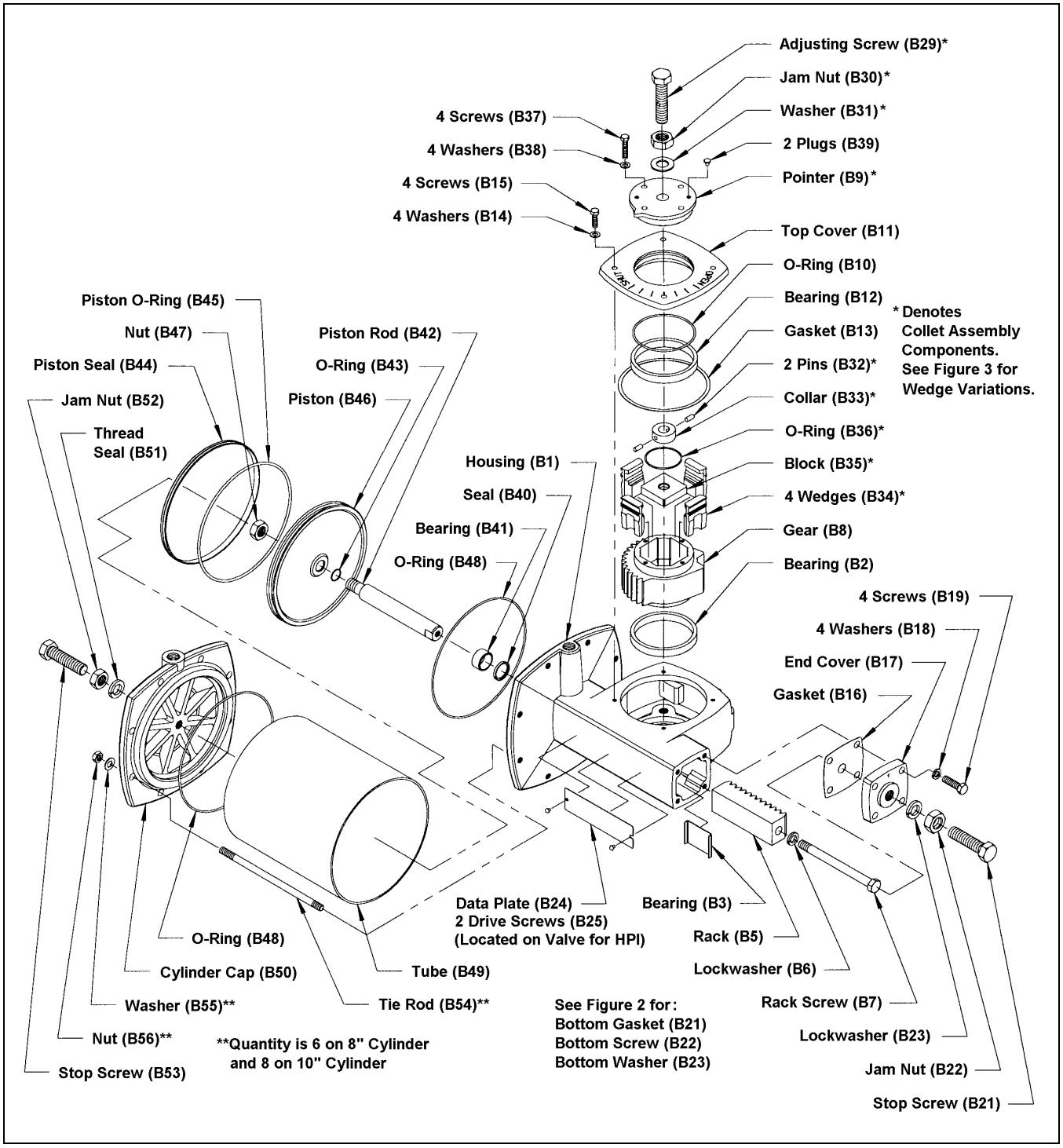

Figure 1 - Component Identification, Unassembled

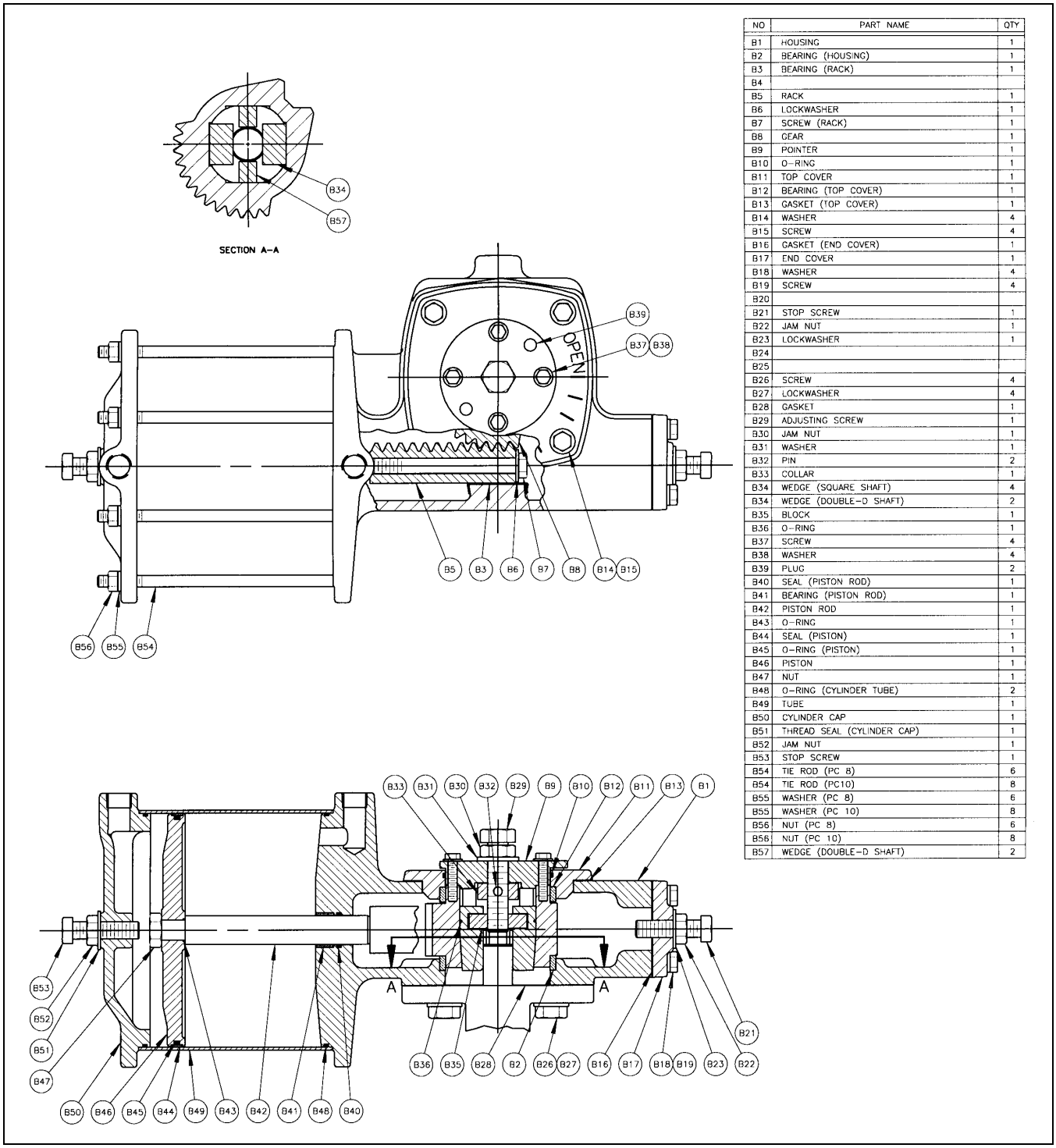

NO	PART NAME	QTY
B1	HOUSING	1
B2	BEARING (HOUSING)	1
B3	BEARING (RACK)	1
B4		
B5	RACK	1
B6	LOCKWASHER	1
B7	SCREW (RACK)	1
B8	GEAR	1
B9	POINTER	1
B10	O–RING	1
B11	TOP COVER	1
B12	BEARING (TOP COVER)	1
B13	GASKET (TOP COVER)	1
B14	WASHER	4
B15	SCREW	4
B16	GASKET (END COVER)	1
B17	END COVER	1
B18	WASHER	4
B19	SCREW	4
B20		
B21	STOP SCREW	1
B22	JAM NUT	1
B23	LOCKWASHER	1
B24		
B25		
B26	SCREW	4
B27	LOCKWASHER	4
B28	GASKET	1
B29	ADJUSTING SCREW	1
B30	JAM NUT	1
B31	WASHER	1
B32	PIN	2
B33	COLLAR	1
B34	WEDGE (SQUARE SHAFT)	4
B34	WEDGE (DOUBLE–D SHAFT)	2
B35	BLOCK	1
B36	O–RING	1
B37	SCREW	4
B38	WASHER	4
B39	PLUG	2
B40	SEAL (PISTON ROD)	1
B41	BEARING (PISTON ROD)	1
B42	PISTON ROD	1
B43	O–RING	1
B44	SEAL (PISTON)	1
B45	O–RING (PISTON)	1
B46	PISTON	1
B47	NUT	1
B48	O–RING (CYLINDER TUBE)	2
B49	TUBE	1
B50	CYLINDER CAP	1
B51	THREAD SEAL (CYLINDER CAP)	1
B52	JAM NUT	1
B53	STOP SCREW	1
B54	TIE ROD (PC 8)	6
B54	TIE ROD (PC10)	8
B55	WASHER (PC 8)	6
B55	WASHER (PC 10)	8
B56	NUT (PC 8)	6
B56	NUT (PC 10)	8
B57	WEDGE (DOUBLE–D SHAFT)	2

Figure 2 - Component Identification, Assembled

Open and Closed Position Stops *(Continued)*

- With an 8" (200 mm) cylinder, tighten the closed position stop nut (3/4") to 140 ± 18 foot pounds (190 ± 24 Nm); tighten the open position stop nut (7/8") to 230 ± 30 foot pounds (312 ± 41 Nm).
- With a 10" (250 mm) cylinder, tighten both stop nuts (7/8") to 230 ± 30 foot pounds (312 ± 41 Nm).

Removing Actuator From Valve

Refer to Figures 1 and 2 for component identification.

1. Shut down the flow in the pipeline.

WARNING!

Flow in the pipeline with the actuator removed can allow the valve to slam closed and cause personal injury and/or damage to the flow system. Shut down the flow in the pipeline before removing the actuator from the valve.

2. Disconnect and lock out the pneumatic power to the actuator to prevent accidental operation of the actuator.

WARNING!

Moving parts from unexpected operation of a powered actuator can cause personal injury or equipment damage. Disconnect and lock out power to the actuator before servicing.

3. Disengage the actuator from the valve shaft by loosening the jam nut (B30) *clockwise* and loosening the adjusting screw (B29) *counterclockwise*.
4. Remove the four mounting screws (B26) that fasten the actuator to the valve.
5. Remove the actuator from the valve by lifting the actuator from the valve shaft.

Actuator Disassembly

Refer to Figures 1 and 2 for component identification.

1. Remove the four pointer screws (B37) and washers (B38); remove the pointer (B9), together with the other collet assembly components indicated in Figure 1.
2. Remove the four top cover screws (B15) and washers (B14), and remove the top cover (B11).
3. Remove the top cover gasket (B13) and the O-Ring (B10).
4. Remove the gear (B8).
5. Remove the four end cover screws (B19) and washers (B18), and remove the end cover (B17) and gasket (B16).
6. Remove the rack screw (B7) and lockwasher (B6), and separate the rack (B5) from the piston rod (B42).
7. Remove the rack bearing (B3).

Actuator Disassembly *(Continued)*

1. Remove the tie rod nuts (B56) and washers (B55) from the tie rods (B54), and remove the cylinder cap (B50).
2. Remove the piston rod (B42)— with piston (B46) and cylinder tube (B49)— from the cylinder head on the housing (B1).
3. Remove the piston rod (B42) and piston (B46) from the cylinder Tube (B49).
4. Remove the piston nut (B47), the piston (B46), and the O-ring (B43) from the piston rod (B42).
5. Remove the piston seal (B44) and the O-ring (B45) from the piston (B46).
6. Remove the piston rod seal (B40) from the actuator housing (B1).
7. Remove the two cylinder tube O-rings (B48) from the cylinder head on the housing (B1) and from the cylinder cap (B50).
8. Remove the tie rods (B54) from the actuator housing (B1).

Actuator Reassembly

Steps 1 through 7 apply to reassembly of the cylinder components. Clean and inspect all parts before reassembly. Worn parts, especially sealing components such as O-rings and other seals should be replaced. Lubricate the cylinder O-rings, other seals, and cylinder tube walls with a paint-like coating using one of these lubricants:

- Dow Corning Molykote No. 44 (**recommended**)
- Shell Retinax AM (alternate)
- Shell Lithall MDS (alternate)

Refer to Figures 1 and 2 for component identification.

1. With the O-ring groove toward the piston rod, place the O-ring (B43), the piston (B46), and the nut (B47) on the piston rod (B42). Tighten the nut to 120 ± 10 foot pounds (163 ± 14 Nm).
2. Place the O-ring (B45) in the smaller groove of the piston (B46). Place the piston seal (B44) in the larger groove of the piston as far around the circumference as possible without stretching the seal. Angle the remaining.
3. Place one cylinder tube O-ring (B48) in the groove in the cylinder head on the housing (B1), and place the other O-ring in the groove in the cylinder cap (B50).
4. Place the 3-piece piston rod seal (B40) in the cylinder head of the housing (B1). Place the rubber seal in position first, and then place a wiper ring in position on each side of the seal.
5. Place the cylinder tube (B49) over the piston (B46) at about a 45° angle. Carefully square the piston into alignment with the cylinder tube, and push the cylinder tube and piston rod into position on the cylinder head of the housing (B1). Use care to prevent damage to the seals. Push the piston (B46) into the cylinder so that the piston is against the cylinder head.
6. Apply Loctite Primer N and Loctite Stud Lock to the shorter threads on each of the tie rods (B54), and turn each stud as far as it will go into the housing (B1).
7. Align the holes in the cylinder cap (B50) with the tie rods (B54) and insert the cylinder cap into the cylinder tube (B49). Place the tie rod nuts (B56) and washers (B55) on the tie rods. Tighten the nuts to 16 ± 2 foot pounds (22 ± 3 Nm).

Actuator Reassembly *(Continued)*

Steps 8 through 18 apply to reassembly of the housing components. Clean and inspect all parts before reassembly. Worn parts, especially sealing components such as O-rings, other seals, and gaskets should be replaced. Before housing reassembly, apply a paint-like coating using one of these lubricants:

- Keystone Zeniplex-1 (**recommended**)
- Amoco Amolith Grease #1-EP (alternate)
- Amsoil GHD (alternate)
- Mobil Mobilux EP 1 (alternate)
- Shell Alvania EP 1 (alternate)
- Texaco Multifak EP 1 (alternate)

to the following surfaces:

- The fabric side of the rack bearing (B3) and the mating side of the rack (B5)
- Both bearing hubs of the gear (B8)
- The top cover O-ring (B10) and the groove in the top cover (B11)
- Both sides of the four wedges, and the mating surfaces inside of the gear (B8)
- The teeth in the rack (B5) and in the gear (B8)

8. Place the rack bearing (B3) in position in the housing (B1). A dab of grease on the back side of the rack bearing will help to hold it in place.
9. Note the witness mark on the tooth near one end of the rack (B5). Assemble the end of the rack opposite the witness mark to the end of the piston rod (B42) with the rack screw (B7) and lockwasher (B6). Do not tighten the screw until step 14 below.
10. With the four tapped holes facing upwards, place the gear (B8) into the housing bearing (B2) so that the marked tooth on the rack (B5) meshes between the two marked teeth on the gear as shown in Figure 3.
11. Place the O-ring (B10) in the groove of the top cover (B11).
12. Mount the top cover (B11) and gasket (B13) to the housing (B1) with the four screws (B15) and washers (B14). Tighten the screws to 15 ± 2 foot pounds (20 ± 3 Nm).
13. Place the actuator in the open position— with the piston rod (B42) extended into the housing— before the next step.
14. Tighten the rack screw (B7) to 216 foot pounds minimum, (293 Nm). If necessary, apply 80 psi (550 kPa) air pressure to the cap end of the cylinder to prevent the piston rod from rotating.
15. Turn the jam nut (B22) and the lockwasher (B23) onto the stop screw (B21), and turn the stop screw into the center hole in the end cover (B17) until the end of the stop screw protrudes about 1/4" (6 mm) through the end cover. Turn the jam nut finger tight.
16. Mount the end cover (B17)— with the 'T' mark towards the top— and the gasket (B16) to the housing (B1) with the four screws (B19) and washers (B18). Tighten the screws to 38 ± 5 foot pounds (52 ± 7 Nm).
17. Turn the adjusting screw (B29) so that the four wedges (B34) are about 1/32" (0.8 mm) from the bottom of the pointer (B9).
18. With the actuator in the open or closed position, place the collet assembly components into the opening in the gear (B8), and align the pointer (B9) with the corresponding position on the top cover (B11). Mount the pointer to the gear with the four screws (B37) and washers (B38). Tighten the screws to 15 ± 2 foot pounds (20 ± 3 Nm).

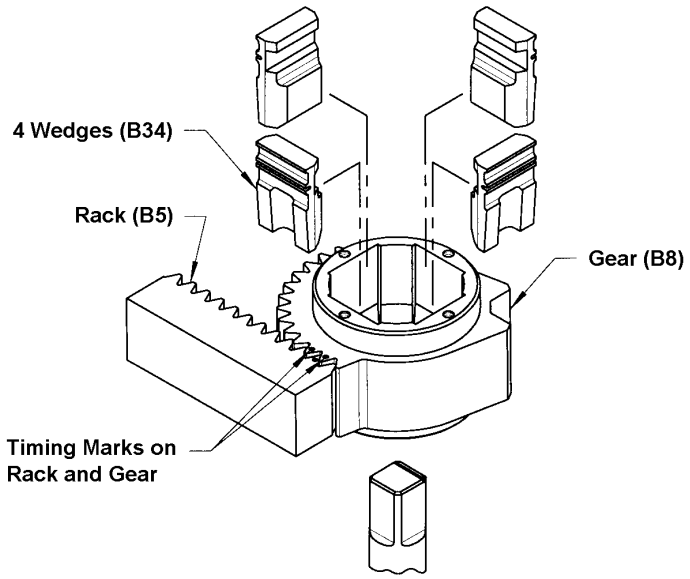

Figure 3 – Collet Assembly

Mounting Actuator on Valve

Refer to Figures 1 and 2 for component identification.

1. Select one of the available actuator-to-valve mounting positions shown on the Installation Drawing. Match the open or closed position of the valve with the open or closed position of the actuator. Also, note the position of the word “open” on the top cover (B11). The cover must be positioned on the housing (B1) so that dial hash mark for “open” will be parallel with the pipeline when the valve is installed. One or more of the following four steps may be required, depending upon the positions of the valve, the actuator, the actuator cover, and the mounting position selected.
    a. Rotate the valve shaft, and/or
    b. Stroke the actuator, and/or
    c. Select a different actuator-to-valve mounting position, and/or
    d. Remove and re-index the cover. If this step is necessary, remove the four cover screws B15), rotate the cover, and replace the four cover screws (B15) and washers (B14). Tighten the screws to 15 ± 2 foot pounds (20 ± 3 Nm).
2. If the actuator does not include the collet assembly (the components are identified in Figure 1, grease the components as described in the *Actuator Reassembly* section and install the assembly as explained in steps 17 and 18 in the same section.

Mounting Actuator on Valve (Continued)

3. Certain high-temperature valves include and require a high-temperature gasket (B28). If the valve includes a gasket, use the gasket included with the valve rather than the gasket included with the actuator. Place the gasket between the actuator and the valve; engage the actuator with the valve shaft in the desired mounting position as determined in step 1, and slide the actuator onto the valve shaft.
4. Assemble the four actuator mounting screws (B26) with lockwashers (B27) up through the mounting holes in the top of the valve (or the actuator adaptor on the valve), through the gasket (B28), and into the threaded holes in the bottom of the actuator. Tighten the screws finger tight— so that the valve and actuator mounting surfaces are in contact, but are free to slide and self-center during the next step.
5. Tighten the adjusting screw (B9A) to 200 ± 30 foot pounds (271 ± 41 Nm).
6. Tighten the actuator mounting screws (B26) to 318 foot pounds minimum, (431 Nm).
7. Loosen the adjusting screw (B9A).
8. Re-tighten the mounting screws (B26) to 318 foot pounds minimum (431 Nm).
9. Tap the adjusting screw with a rubber mallet so that the gear (B8) bottoms out against the lower housing bearing (B2).
10. Begin to tighten the adjusting screw (B9A); as the adjusting screw becomes snug, repeat step 9, and finish tightening to 200 ± 30 foot pounds (271 ± 41 Nm).
11. Tighten the jam nut (B30) *counterclockwise* to 200 ± 30 foot pounds (271 ± 41 Nm).
12. Adjust the open and closed position stops as explained in the *Open and Closed Position Stops* section.
13. Operate the actuator and valve three full cycles to demonstrate that the unit operates smoothly in both directions. Do not exceed 100 psi (690 kPa) in the cylinder.

Changing Mounting Position of Actuator on Valve

The actuator may be mounted on the valve in any one of the mounting positions shown on the Installation Drawing. The mounting position may be changed as follows:

1. Remove the actuator from the valve as described in the *Removing Actuator From Valve* section.
2. Replace the actuator on the valve as described in the *Mounting Actuator On Valve* section.

Lockable Model

The R3 PowerRac Cylinder Actuator is available as a lockable model that allows the actuator to be locked in either the open or closed position. The lockable model is identified by PRL in the catalog characteristic.

As shown in Figure 4, the lockable model includes two lock screws (B64) and two jam nuts (B65). In the locked position, the screws engage with mating notches in the gear (B8). A lockout cover assembly (B60) is also included.

Lockable Model (Continued)

CAUTION!

The two lock screws (B64) must be in either the unlocked or the locked position as described in the following sections. The gear (B8) will be damaged if either of the stop screws is placed in an intermediate position between the unlocked and locked positions.

Unlocked Condition

Under normal unlocked running conditions, both of the lock screws are backed out of the housing to allow the gear to rotate freely in either direction. To be fully disengaged, the distance from the housing to the end of each lock screw must be at least 3 1/8" (80 mm). To hold the lock screws in position, the jam nuts are tightened to 140 ± 18 foot pounds (190 ± 24 Nm).

Locked: Closed Position

Follow the steps below to change the unit from the unlocked condition to the locked closed position. Refer to Figure 3 for component identification. Before proceeding, the open and closed position stops must be correctly adjusted as described in the *Open and Closed Stops* section.

1. Operate the actuator to the fully closed (clockwise) position.

WARNING!

Adjust only the left-side lock screw to lock the actuator in the closed position. Adjusting the wrong screw does not lock the actuator, and can result in personal injury or equipment damage.

2. Loosen the jam nut (B65) on the **left** side lock screw (B64), as viewed when facing the top of the heads of the lock screws. Hold the lock screw from turning, and turn the jam nut several turns counterclockwise, to the head of the lock screw.
3. Turn the **left** side lock screw clockwise several turns until resistance is felt from the lock screw contacting the notch in the gear (B8). Tighten the lock screw to 5 to 10 foot pounds (7 to 14 Nm) to assure that the lock screw is contacting the gear.
4. Turn the **left** side jam nut clockwise against the actuator housing. While holding the lock screw from turning, tighten the jam nut to 140 ± 18 foot pounds (190 ± 24 Nm).
5. Place and lock the lockout cover assembly (B60) on the head of the **left** side lock screw.

Locked: Open Position

Follow the steps below to change the unit from the unlocked condition to the locked open position. Refer to Figure 4 for component identification. Before proceeding, the open and closed position stops must be correctly adjusted as described in the *Open and Closed Stops* section.

1. Operate the actuator to the fully open (counterclockwise) position.

WARNING!

Adjust only the right-side lock screw to lock the actuator in the open position. Adjusting the wrong screw does not lock the actuator, and can result in personal injury or equipment damage.

2. Loosen the jam nut (B65) on the **right** side lock screw (B64), as viewed when facing the top of the heads of the lock screws. Hold the lock screw from turning, and turn the jam nut several turns counterclockwise, to the head of the lock screw.
3. Turn the **right** side lock screw clockwise several turns until resistance is felt from the lock screw contacting the notch in the gear (B8). Tighten the lock screw to 5 to 10 foot pounds (7 to 14 Nm) to assure that the lock screw is contacting the gear.
4. Turn the **right** side jam nut clockwise against the actuator housing. While holding the lock screw from turning, tighten the jam nut to 140 ± 18 foot pounds (190 ± 24 Nm).
5. Place and lock the lockout cover assembly (B60) on the head of the **right** side lock screw.

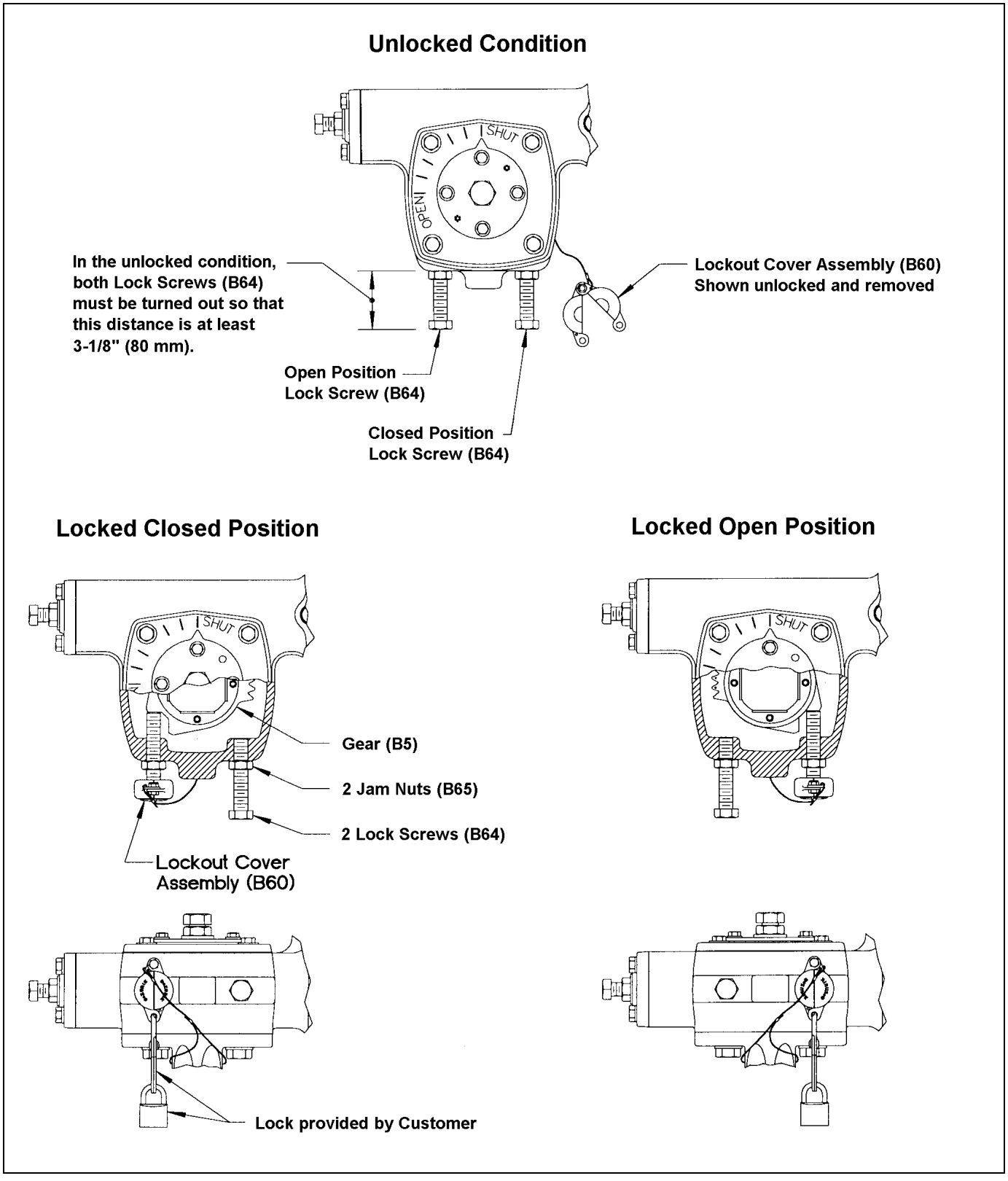

Figure 4 – Lockable Model, Component Identification

Troubleshooting

Condition	Possible Cause	Corrective Action
Actuator closes to wrong position	Closed position stop is set incorrectly	Adjust closed position stop. See OPEN AND CLOSED STOPS.
Actuator opens to wrong position	Open position stop is set incorrectly	Adjust open position stop. See OPEN AND CLOSED STOPS.
Actuator will not fully operate valve	Cylinder pressure is low	Increase cylinder pressure. Do not exceed 100 psi (69 kPa).
	Actuator is sized incorrectly	Use larger actuator
	Piston seal in cylinder is leaking	Replace piston seal(s). See ACTUATOR DISASSEMBLY AND REASSEMBLY.
	Pipeline obstruction in valve is preventing closure	Remove obstruction
	Lockable Model is locked.	Place in unlocked condition. See LOCKABLE MODEL.
Actuator rotates wrong direction	Air connections to cylinder are incorrect	Reverse air connections to cylinder

Limited Warranty

DeZURIK, Inc. (“Seller”) manufactured products, auxiliaries and parts thereof that we manufacture for a period of twenty-four (24) months from date of shipment from Seller’s factory, are warranted to the original purchaser only against defective workmanship and material, but only if properly stored, installed, operated, and serviced in accordance with Seller’s recommendations and instructions.

For items proven to be defective within the warranty period, your exclusive remedy under this limited warranty is repair or replacement of the defective item, at Seller’s option, FCA Incoterms 2020 Seller’s facility with removal, transportation, and installation at your cost.

Products or parts manufactured by others but furnished by Seller are not covered by this limited warranty. Seller may provide repair or replacement for other’s products or parts only to the extent provided in and honored by the original manufacturer’s warranty to Seller, in each case subject to the limitations contained in the original manufacturer’s warranty.

No claim for transportation, labor, or special or consequential damages or any other loss, cost or damage is being provided in this limited warranty. You shall be solely responsible for determining suitability for use and in no event shall Seller be liable in this respect.

This limited warranty does not warrant that any Seller product or part is resistant to corrosion, erosion, abrasion or other sources of failure, nor does Seller warrant a minimum length of service.

Your failure to give written notice to us of any alleged defect under this warranty within twenty (20) days of its discovery, or attempts by someone other than Seller or its authorized representatives to remedy the alleged defects therein, or failure to return product or parts for repair or replacement as herein provided, or failure to store, install, or operate said products and parts according to the recommendations and instructions furnished by Seller shall be a waiver by you of all rights under this limited warranty.

This limited warranty is voided by any misuse, modification, abuse or alteration of Seller’s product or part, accident, fire, flood or other Act of God, or your failure to pay entire contract price when due.

The foregoing limited warranty shall be null and void if, after shipment from our factory, the item is modified in any way or a component of another manufacturer, such as but not limited to; an actuator is attached to the item by anyone other than a Seller factory authorized service personnel.

All orders accepted shall be deemed accepted subject to this limited warranty, which shall be exclusive of any other or previous warranty, and this shall be the only effective guarantee or warranty binding on Seller, despite anything to the contrary contained in the purchase order or represented by any agent or employee of Seller in writing or otherwise, notwithstanding, including but not limited to implied warranties.

THE FOREGOING REPAIR AND REPLACEMENT LIMITED WARRANTY IS IN LIEU OF ALL OTHER WARRANTIES, OBLIGATIONS AND LIABILITIES, INCLUDING, BUT NOT LIMITED TO, ALL WARRANTIES OF FITNESS FOR A PARTICULAR PURPOSE OR OF MERCHANTABILITY OR OTHERWISE, EXPRESSED OR IMPLIED IN FACT OR BY LAW, AND STATE SELLER’S ENTIRE AND EXCLUSIVE LIABILITY AND YOUR EXCLUSIVE REMEDY FOR ANY CLAIM IN CONNECTION WITH THE SALE AND FURNISHING OF SERVICES, GOODS OR PARTS, THEIR DESIGN, SUITABILITY FOR USE, INSTALLATION OR OPERATIONS. NEITHER ANY PERFORMANCE OR OTHER CONDUCT, NOR ANY ORAL OR WRITTEN INFORMATION, STATEMENT, OR ADVICE PREPARED BY SELLER OR ANY OF OUR EMPLOYEES OR AGENTS WILL CREATE A WARRANTY, OR IN ANY WAY INCREASE THE SCOPE OR DURATION OF THE LIMITED WARRANTY.

Disclaimer

Metric fasteners should not be used with ASME Class 150/300 bolt holes and flange bolt patterns. If you use metric fasteners with ASME Class 150/300 bolt holes and flange bolt patterns, it may lead to product failure, injury, and loss of life. DeZURIK Inc. disclaims all liability associated with the use of metric fasteners with ASME Class 150/300 bolt holes and flange patterns, including but not limited to personal injury, loss of life, loss of product, production time, equipment, property damage, lost profits, consequential damages of any kind and environment damage and/or cleanup. Use of metric fasteners with ASME Class 150/300 bolt holes and flange bolt patterns is a misuse that voids all warranties and contractual assurances. If you use metric fasteners with ASME Class 150/300 bolt holes and flange bolt patterns, you do so at your sole risk and any liability associated with such use shall not be the responsibility of DeZURIK, Inc. In addition to the foregoing, DeZURIK’s Manufacturer’s Conditions apply.

Limitation of Liability

IN NO EVENT SHALL SELLER BE LIABLE FOR ANY DIRECT, INDIRECT, SPECIAL, PUNITIVE, EXEMPLARY, OR CONSEQUENTIAL DAMAGES (INCLUDING, BUT NOT LIMITED TO; DAMAGE TO OR LOSS OF OTHER PROPERTY OR EQUIPMENT, BUSINESS INTERUPTION, COST OF SUBSTITUTE PRODUCTS, LOSS OF TIME, LOSS OF PROFITS OR REVENUE, COST OF CAPTIAL, LOSS OF USE, OR DIMINUTION IN VALUE) WHATSOEVER, AND SELLER’S LIABILITY, UNDER NO CIRCUMSTANCES, WILL EXCEED THE CONTRACT PRICE FOR THE GOODS AND/OR SERVICES FOR WHICH LIABILITY IS CLAIMED. ANY ACTION FOR BREACH OF CONTRACT BY YOU, OTHER THAN RIGHTS RESPECTING OUR LIMITED WARRANTY DESCRIBED ABOVE, MUST BE COMMENCED WITHIN 12 MONTHS AFTER THE DATE OF SALE.

Sales and Service

For information about our worldwide locations, approvals, certifications and local representative:

Web site: www.dezurik.com E-Mail: info@dezurik.com

250 Riverside Ave. N., Sartell, MN 56377 ● Phone: 320-259-2000 ● Fax: 320-259-2227

DeZURIK, Inc. reserves the right to incorporate our latest design and material changes without notice or obligation. Design features, materials of construction and dimensional data, as described in this manual, are provided for your information only and should not be relied upon unless confirmed in writing by DeZURIK, Inc. Certified drawings are available upon request.

December 2022

DeZURIK

BULLETIN
JUNE 2023

15.00-1

TAG: 20-FCV-301-1/2/3/4

DeZURIK VPB V-PORT BALL VALVES



DeZURIK.com

VPB V-Port Ball Valves

Design and Construction

DeZURIK V-Port Ball Valves deliver superior performance and reliability required to optimize process performance. This versatile valve is designed for control of fibrous suspension applications, in addition to clean, dirty, viscous and corrosive liquids and gases.

The VPB is available in ASME Class 150 in size range 1-20" and is available in ASME Class 300 in size range 1-12". DeZURIK V-Port Ball Valves feature one-piece body construction and are available in flanged or flangeless end connections. They conform to or exceed North American and International Standards for control valves. Superior control performance is designed into the geometry of the ball for critical management of flow. A locked ball-to-shaft connection ensures no lost motion for critical control. Bearings, covers and fasteners are designed for maximum valve reliability.

When operated by a high quality DeZURIK actuator and controlled by one of many high performing positioners, the DeZURIK V-Port Ball control valve can deliver control accuracy exceeding 0.5% as measured by the BenchMark Control Valve Diagnostics™ System. Control accuracy will increase process plant efficiency, improve overall profitability and reduce control valve life-cycle costs.

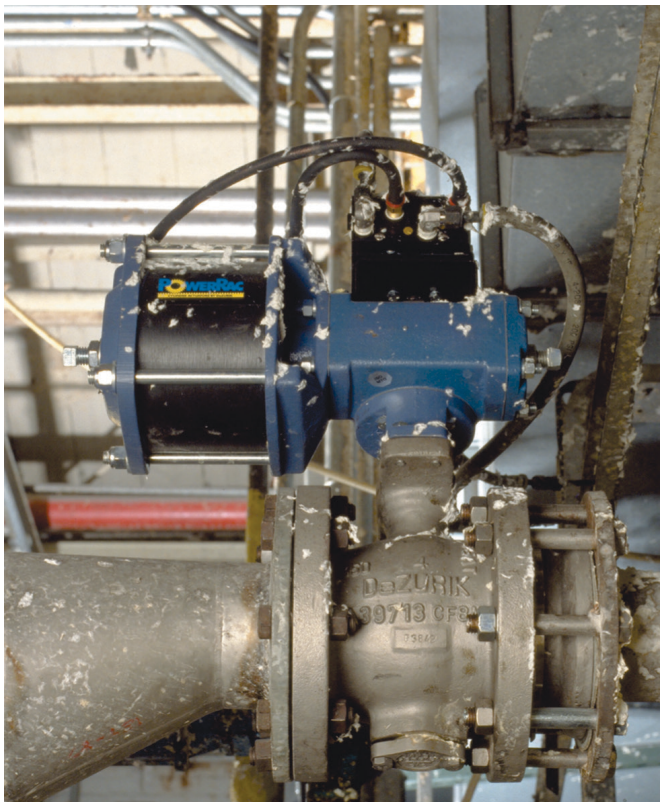

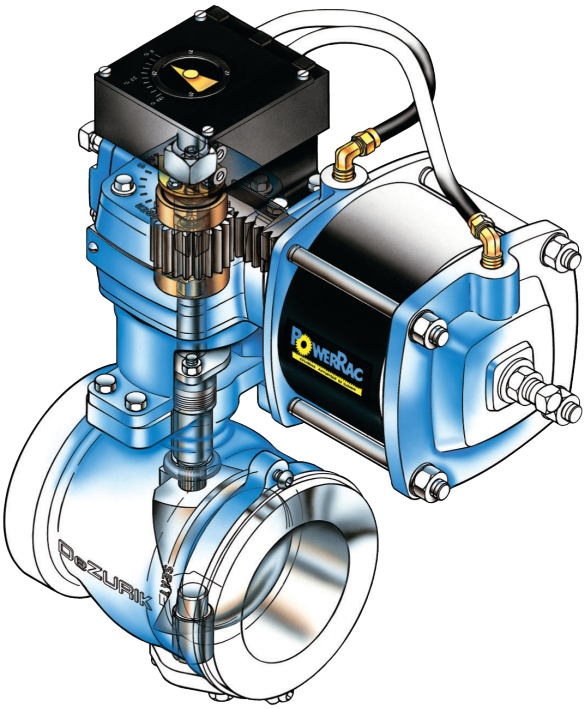

In the event maintenance is needed, DeZURIK's unique design facilitates fast, easy breakdown and assembly of valve components with no special tools required. The result is reduced maintenance time and the lowest overall cost of ownership.

Drop-in-place, self-aligning and interchangeable seat options offer ease in maintenance. Available seat options include reinforced PTFE, flexible metal, rigid metal and clearance.

Streamlined Flow Passages

DeZURIK V-Port Ball Valves feature a streamlined flow passage, providing maximum efficiency (Cv/Kv per valve size) and minimizing erosion inside the valve body.

Rugged, Easy-to-Maintain Construction

The heavy-duty cast body is a one-piece design for increased installed-pipe integrity and minimal potential leak paths. Stainless steel construction combined with drop-in seats and a splined shaft and ball connection makes the DeZURIK V-Port Ball Valve easy to maintain.

Carbon Steel and High Alloy Valves Available

VPB valve bodies are available in 316 and 317 stainless steel, carbon steel and Hastelloy C.

© 2023 DeZURIK, Inc.

Laying Length Flexibility

DeZURIK VPB valves offer the ultimate in face-to-face flexibility. The solid one-piece body is available in either ASME B16.10 or ASME/ISA take-out dimensions. V-Port Ball valves are available in flanged or flangeless construction to meet individual requirements and common piping standards. For added versatility, these valves meet IEC, ISO and EN face-to-face dimensions. In plants that have an installed base of both ASME B16.10 and ASME/ISA control valves, VPB users have been able to minimize storeroom inventory by stocking valve bodies, ASME/ISA retainers and ASME B16.10 retainers. A replacement valve with either face-to-face dimension can be quickly installed. DeZURIK also offers an integrally flanged one-piece ASME B16.10 body. Laying length flexibility is one example of how the VPB can save money.

International Flange Drilling

DIN 10, 16, 25 and 40, and JIS 10, 16 and 20 flange drilling bolt circle options are available in addition to ASME B16.5.





V-Ball Design

Utilizing computer-aided design and extensive flow-loop testing, the v-orifice was designed to provide the high rangeability and precision throttling required on fibrous suspension applications, as well as clean or dirty liquids and gases.

The straight through flow passage provides maximum efficiency and excellent erosion resistance. The ball can be furnished with a range of high-alloy materials, all provided with a heat-treated nickel overlay. This overlay provides a non-porous and lubricious surface, resulting in greater corrosion resistance and less sliding friction. For abrasive and high temperature applications, a 317 stainless steel ball can be furnished with a tungsten carbide overlay or a Hastelloy C ball with nickel overlay can be provided.

Uninterrupted Gasket Surface

DeZURIK V-Port Ball Valves feature a full, uninterrupted, raised-face gasket surface that provides maximum gasket integrity. The gasket surface provides full seal contact area with ASME B16.20 gaskets.

Sealed Bearings

The sealed-bearing option prevents media from entering the bearing areas, which can hinder valve operation. PFA Fluoropolymer or FFKM Perfluoroelastomer seals are available for bearings that need exceptional protection from scaling, plating, abrasive or polymerizing media.

Corrosion-Resistant Bearings



The one-piece bearing provides a large area of radial support to the shaft. The shaft is fully supported, greatly reducing shaft fatigue. The 317 stainless steel wire mesh reinforced PTFE bearing has a low coefficient of friction that minimizes operating torques and reduces actuator sizing requirements. For severe-service applications, a cobalt-chromium alloy bearing is available. A sealed-bearing option is also available.



Self-Aligning Ball and Seat

The self-aligning ball and seat on the VPB valve reduces lengthy setup time during repair and reassembly. Valves can easily be returned to like-new performance without time-consuming special procedures. And because of the spring-loaded metal seat design, the ball and seat self-compensate for wear on either surface.

Stainless Steel Fasteners

As standard, all DeZURIK V-Port Ball Valve fasteners are stainless steel, providing easy disassembly. An additional maintenance feature is a bottom access cover for valve disassembly and reassembly.

Splined Shaft with Solid Ball-to-Shaft Connection

The splined shaft and ball with locking torque screw on DeZURIK V-Port Ball Valves provide a high-strength, positive connection that effectively eliminates mechanical backlash and hysteresis. The splined connection with locking torque screw ensures accurate, precise positioning of the ball.
The machined diameter of the shaft provides blow-out proof protection.



Common Valve Components

DeZURIK's V-Port Ball Valve was designed to share a majority of valve components with the DeZURIK RCV Rotary Control Valve. The two valves use the same bodies, packing components, bearings, brackets and fasteners. The common components reduce spare parts in inventory and associated costs for plants utilizing both styles of DeZURIK control valves.

Streamlined Maintenance

DeZURIK V-Port Ball Valves feature the simplest maintenance procedures among control valves available. There are no threaded trim parts. The seat retainer and trim components drop in place ensuring precise alignment of plug and seat. Disassembly and reassembly are easily completed with no special wrenches or other special tools required. On viscous and suspended fibrous services where routine maintenance is expected, the VPB's drop-in trim, optional sealed bearings and self-aligning ball/seat reduce maintenance costs and minimize lost production.

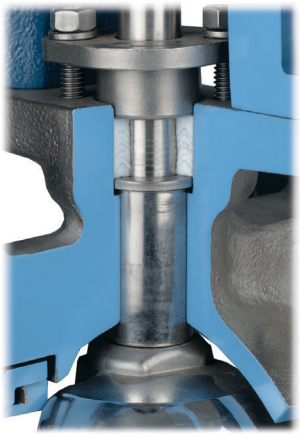

Seat Options

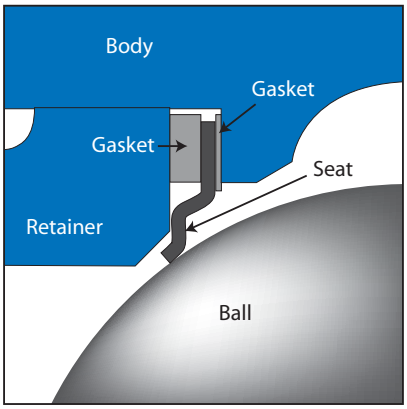

Flexible Metal Seat

The flexible metal seat is designed to shear fibrous fluids and provides shutoff up to ANSI/FCI 70.2 Class IV standard. Flexible metal seats are rated to the full valve pressure rating with the valve installed in the flow-to-open direction and rated to 150 psi (1030 kPa) pressure differential when installed in the flow-to-close direction.

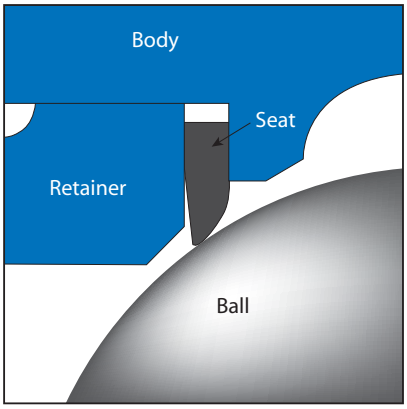

Reinforced PTFE Seat

Reinforced PTFE seats are typically used on clean fluid applications where ANSI/FCI 70.2 Class VI shutoff is required. DeZURIK V-Port Ball Valves feature a reinforced PTFE seat, designed for flow-to-open operation, rated to 285 psi (1895 kPa) pressure differential. For added versatility, all V-Port Ball valve seat options are field-interchangeable.

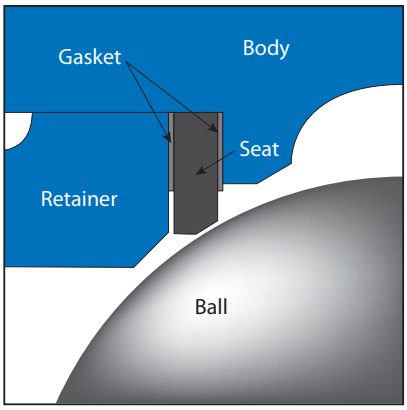

Clearance Seat

The clearance seat provides maximum controllability and minimum hysteresis in applications that do not require tight shutoff. This bi-directional seat eliminates seat friction. Shutoff is 5% of valve's maximum flow when closed.

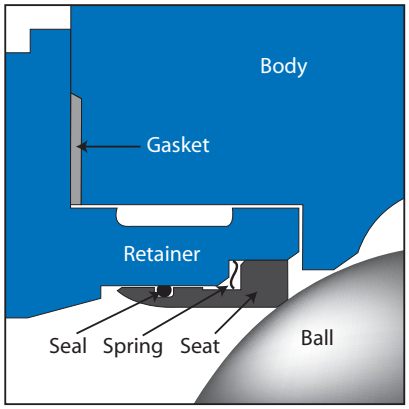

Rigid Seat

Rigid seats are available for abrasive application including reclaimed fiber systems and applications with suspended chemical solids. The rigid seat provides shutoff performance to ANSI/FCI 70.2 Class IV. Materials include 317 stainless steel and Hastelloy C, all with heat treated nickel overlay. For enhanced abrasion resistance, a 317 stainless steel seat with tungsten carbide seating surface and solid Cobalt-Chromium alloy bearing is available.

An optional nickel-chromium spring can be substituted for the 17-4 PH stainless steel seat spring when added corrosion resistance is required.

The rigid seat is designed for flow-to-open operations and is field-interchangeable with the reinforced PTFE, flexible metal and clearance seats.

Actuators

Actuator Flexibility Options

V-Port Ball valves are available with DeZURIK PowerRac® or Diaphragm actuators. The actuator top mounting pads or adapter brackets of currently manufactured DeZURIK rotary control and isolation valves (RCV, VPB, BHP, BOS) are compatible with the ISO 5211 standard. This common actuator platform increases flexibility and helps reduce spare parts inventory.

Cylinder Actuators

PowerRac® Cylinder actuators are available as double-acting or spring return. They feature a high opening torque for on-off applications and also maintain a high operating torque throughout the full stroke for modulating service.

Diaphragm Actuators

Diaphragm actuators DR-40B & DR-85B are 316 stainless steel construction to provide corrosion resistance for a wide range of demanding industrial environments. They are designed for on-off or modulating service in either a Reverse (spring-to-close) or Direct (spring-to-open) mode. Fail action can be easily changed in the field by flipping the actuator over with no additional parts required. Larger size diaphragm actuators DR-145 & DR-250 are available to accommodate larger valve sizes and higher shutoff pressure differentials.



Close Coupling of Actuator to Valve

DeZURIK Diaphragm and PowerRac® actuators rigidly connect to the valve and the positioner on the actuator housing. This accurately feeds exact valve position directly to the positioner. In addition, the close coupling of the actuator to the valve makes the total package as compact as possible.

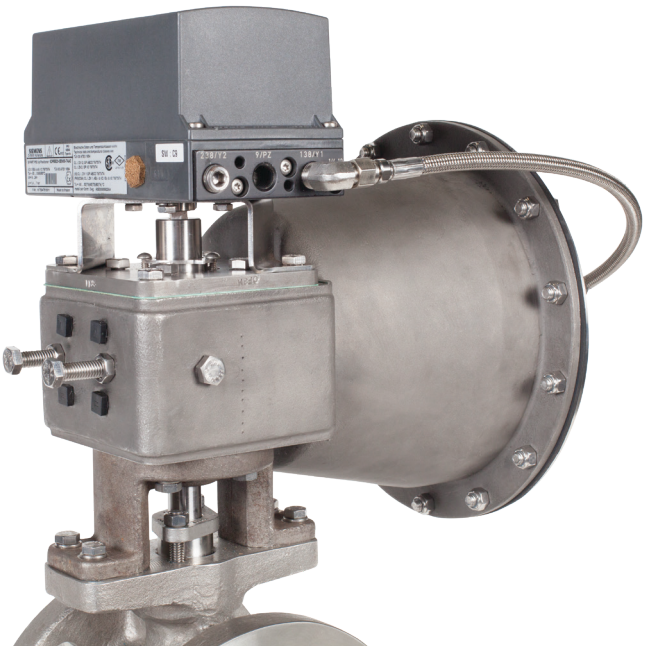

Throttling Control

The V-Port Ball valve design ensures unsurpassed accuracy over the 90° range of operation. Splined and locked ball-to-shaft connection, characterized v-port ball, low-friction bearings and low-friction packing combine to give superior control, including fast, accurate response to signal changes. These rigid connections effectively eliminate mechanical backlash and hysteresis.

The V-Port Ball valve with a high quality DeZURIK actuator and one of many high performing positioners will exceed 0.5% control accuracy, delivering over 200 discrete positions. This exceeds industry valve dynamic performance standards as well as the accuracy levels of most pneumatically actuated control valves.

To enhance accuracy of the VPB in real world process systems, the control valve assembly can be fitted with a smart digital positioner that not only provides near zero air bleed. This allows precise control and feedback of valve performance to the Distributed Control System (DCS).

Intelligent Positioners

Digital positioners improve reliability and performance through accurate calibration. Accurate calibration is achieved by the touch of a button; the positioner self-calibrates. They also offer diagnostic capabilities which monitor variables in the valves such as valve travel, valve friction, air consumption, and more to ensure operation is at peak performance. Digital positioners are available with HART, Foundation Fieldbus, or Profibus communication protocols. Digital positioners can also be used in a conventional 4-20 mA, analog control environment.



DeZURIK P30A



DeZURIK P85

Performance Testing

Control valve performance is tested with a BenchMark Control Valve Diagnostic™ system. Each valve has a discrete test result that can be referenced through the valve's serial number. V-Port Ball valve performance accuracy provides in excess of 200 repeatable positions. With routine maintenance, field monitoring or monitoring through a digital positioner, this performance level can be maintained throughout the life of the valve.

Control Valve Test Report

All VPB valve/actuator/positioner assemblies are tested for accuracy. The optional CVT Control Valve Test Report can be ordered which documents the response measurement from step inputs per ISA-75.25.01-2000 (R2010).

Accessories

A full line of accessories integrated to the actuator system is available to meet your individual mill/plant requirements.

Materials of Construction

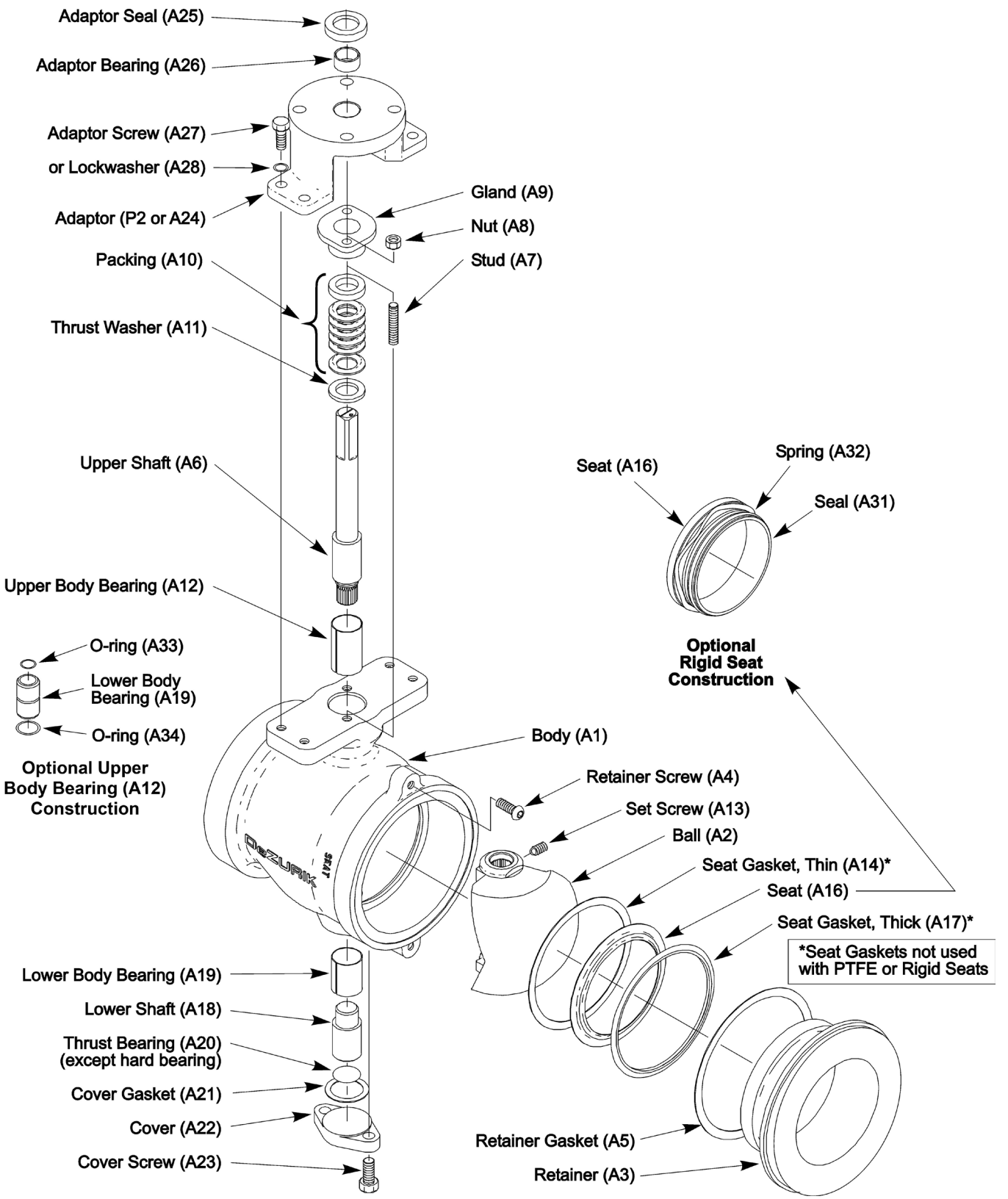

Materials of Construction

Item	Description	Order Code	Material
A1	Body	S2	316 Stainless Steel, ASTM A 351, Grade CF8M
		S3	317 Stainless Steel, ASTM A 351, Grade CG8M
		CS	Carbon Steel, ASTM A 216, Grade WCB
		HC	Hastelloy C, ASTM A 494, Grade CW2M
A2	Ball	S3NH	317 Stainless Steel, ASTM A 351, Grade CF8M, with Heat Treated Nickel Overlay
		S3S	317 Stainless Steel, ASTM A 351, Grade CF8M, with Tungsten Carbide Overlay
		HCNH	Hastelloy C, ASTM A494, Grade CW2M with Heat Treated Electroless Nickel Overlay
A3	Retainer	S2	316 Stainless Steel, ASTM A 351, Grade CF8M
		S3	317 Stainless Steel, ASTM A 351, Grade CG8M
		CS	Carbon Steel, ASTM A 216, Grade WCB
		HC	Hastelloy C, ASTM A 494, Grade CW2M
A4	Screw, Retainer	All	18-8 Stainless Steel
A5	Gasket, Retainer	All	Flexible Graphite
A6	Shaft, Upper	S10	2205 Duplex Stainless Steel
		S5	17-4 PH Stainless Steel
		HCC	Hastelloy C, ASTM B 574, Alloy N06022 Ceramic Coated
		TNC	Titanium, Ceramic Coated
A7	Stud, Packing	All	18-8 Stainless Steel
A8	Nut, Packing	All	18-8 Stainless Steel
A9	Gland	S2, CS	316 Stainless Steel, ASTM A 351, Grade CF8M
		S3	317 Stainless Steel, ASTM A 351, Grade CG8M
		HC	Hastelloy C, ASTM A 494, Grade CW2M
A10	Packing	TC	PTFE Chevron
		G2	Braided Carbon Graphite
A11	Thrust Washer	S2, CS	316 Stainless Steel, ASTM A 276, Type 316
		S3	317 Stainless Steel, ASTM A 276, Type 317
		HC	Hastelloy C, ASTM B 574 or B 575
A12	Bearing, Upper	FT	317 Stainless Steel Wire Mesh Reinforced PTFE
		HC	Hastelloy C
		SL	Cobalt Chromium Alloy
		S9	440C Stainless Steel
A13	Set Screw	S2, CS	316 Stainless Steel
		S3, HC	Alloy 20 Stainless Steel
A14	Gasket, Seat	S2, S3, HC	Flexible Graphite
A16	Seat	RT	Reinforced PTFE, Filled 15% Glass, 5% Molybdenum
		S6N	Super Austenitic Stainless Steel (AL-6XN®), Electroless Nickel Plated, Heat Treated
		S5C	17-4 PH Stainless Steel , H 1150
		S3R	317 Stainless Steel, ASTM A351, Grade CG8M, Electroless Nickel Plated, Heat Treated
		S3S	317 Stainless Steel, ASTM A351, Grade CF8M, UCAR 100 and SDG Tungsten Carbide Coated
		S3RI	317 Stainless Steel, ASTM A351, Grade CG8M, Hard Faced, Heat Treated
		S3SI	317 Stainless Steel, ASTM A351, Grade CG8M, Hard Faced, Heat Treated
		HCRI	Hastelloy C, ASTM A494, Grade CW2M, Electroless Nickel Plated, Heat Treated
A17	Gasket, Seat	S3	317L Stainless Steel, Flexible Graphite Filled
		HC	Hastelloy C, Flexible Graphite Filled
A18	Shaft, Lower	S10	2205 Duplex Stainless Steel
		S5	17-4 PH Stainless Steel
		HCC	Hastelloy C, ASTM B 574, Alloy N06022 Ceramic Coated
		TNC	Titanium, Ceramic Coated
A19	Bearing, Lower	FT	317 Stainless Steel Wire Mesh Reinforced PTFE
		HC	Hastelloy C
		SL	Cobalt Chromium Alloy
		S9	440C Stainless Steel
A20	Bearing, Thrust	FT	PTFE Fabric Bonded to 317 SS
		FT, HC	PTFE Fabric Bonded to Hastelloy C
		SL	Graphite
A21	Gasket, Cover	All	Graphite
A22	Cover	S2	316 Stainless Steel, ASTM A 351, Grade CF8M
		S3	317 Stainless Steel, ASTM A 351, Grade CG8M
		CS	Carbon Steel, ASTM A 216, Grade WCB
		HC	Hastelloy C, ASTM A 494, Grade CW2M
A23	Screw, Cover	All	316 Stainless Steel
A24	Adaptor	All	Ductile Iron
A25	Seal, Adaptor	DR, PR	Nitrile Rubber, Carbon Steel Case
A26	Bearing, Adaptor	DR55, 85	Oil-Impregnated Bronze
A27	Screw, Adaptor	All	18-8 Stainless Steel
A28	Lockwasher, Adaptor	All	18-8 Stainless Steel
A31	Seal, O-Ring	All	Fluoro Rubber, Encapsulated in PFA
A32	Spring	All	Fluoro Rubber, Encapsulated in PFA
A33	O-ring	S9VS, SLVS, HCVS	Fluoropolymer Seal
		SLKS, HCKS	FFKM Perfluoroelastomer Seal
A34	O-ring	S9VS, SLVS, HCVS	Fluoropolymer Seal
		SLKS, HCKS	FFKM Perfluoroelastomer Seal

Valve Selection

Flow Characteristic

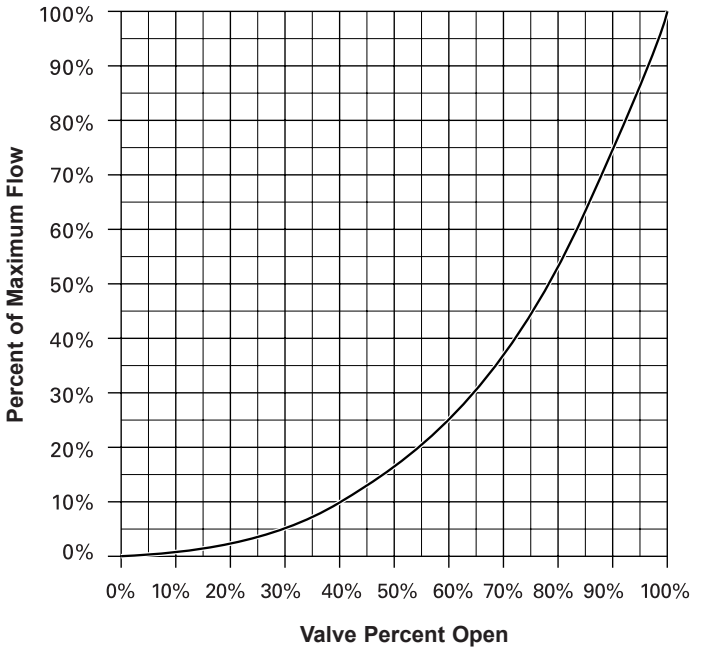

Applicable Standards

DeZURIK VPB V-Port Ball Valves are designed and/or tested to meet the following standards:	
ASME B16.10	Face-to-Face dimensions, short pattern requirements
ASME B16.34	Body Wall Thickness and Pressure/temperature ratings for Class 150 and 300 Valves
ASME B16.5	Flange dimensions conform to Pipe flanges and Flanged Fittings for Class 150 and 300
ANSI/FCI 70.2	Control valve seat leakage
EN 558-1 PN 10/16	Basic Series 3, Face-to-Face dimensions
IEC 534-3-2 F-F	Face-to-Face dimensions, Industrial Process Control Valves
ANSI/ISA-75.02	Control Valve Capacity Test Procedures
ANSI/ISA-75.08.02	Face-to-Face dimensions for Flanged and Flangeless Rotary Control Valves
ISO 5211/1 & 2	Part-turn valve actuator attachment, Part 1: Flange dimensions and Part 2: Flange and Coupling performance characteristics
ISO 5752 PN 10/16	Basic Series 3, Face-to-Face dimensions
MSS-SP-25	Data Plate and body identification conform to marking requirements

Flow Parameters

Valve Size	Cv*/Kv* 100% Open	
	Flexible Metal & Rigid Metal Seats	Reinforced PTFE & Clearance Seats
1" / 25mm	36 / 31	40 / 35
1.5" / 40mm	120 / 104	135 / 117
2" / 50mm	210 / 182	235 / 203
2.5" / 65mm	260 / 225	295 / 255
3" / 80mm	360 / 311	420 / 363
4" / 100mm	600 / 519	690 / 597
6" / 150mm	1230 / 1064	1290 / 1116
8" / 200mm	2015 / 1743	2190 / 1894
10" / 250mm	3000 / 2595	3180 / 2751
12" / 300mm	4225 / 3655	4390 / 3797
14" / 350mm	5830 / 5043	6060 / 5242
16" / 400mm	7500 / 6488	7770 / 6721
18" / 450mm	9500 / 8218	9840 / 8512
20" / 500mm	12000 / 10380	12430 / 10752

*Cv = Flow in GPM of water at 1 psi pressure drop.
*Kv = Flow in m3/hr. of water at 100 kPa pressure drop.

Valve Weights

Valve Size	Class 150			Class 300
	Flanged (F1S & F1A)	Flangeless (W1S)	Add for Long Body (F1L)	Flanged (F2S)
1" / 25mm	12 / 6	9 / 5	0.5 / 1	15 / 7
1.5" / 40mm	17 / 8	12 / 6	2.0 / 1	24 / 11
2" / 50mm	21 / 10	13 / 6	2.8 / 2	27 / 13
2.5" / 65mm	32 / 15	20 / 10	3.0 / 2	40 / 19
3" / 80mm	47 / 22	35 / 16	3.3 / 2	58 / 27
4" / 100mm	63 / 29	42 / 20	3.5 / 2	79 / 36
6" / 150mm	95 / 44	74 / 34	10.5 / 5	142 / 65
8" / 200mm	152 / 69	116 / 53	15.3 / 7	208 / 95
10" / 250mm	236 / 108	182 / 83	17.5 / 8	342 / 156
12" / 300mm	368 / 167	314 / 143	11.3 / 6	516 / 235
14" / 350mm	560 / 255	—	—	—
16" / 400mm	695 / 316	—	—	—
18" / 450mm	890 / 404	—	—	—
20" / 500mm	1105 / 501	—	—	—

Pounds
Kilograms

Valve Selection

Pressure Ratings

Flex Metal*, Rigid Metal and Clearance Seats (S6N, S5C, S3R, S3S, S3RI, S3SI, HCRI)

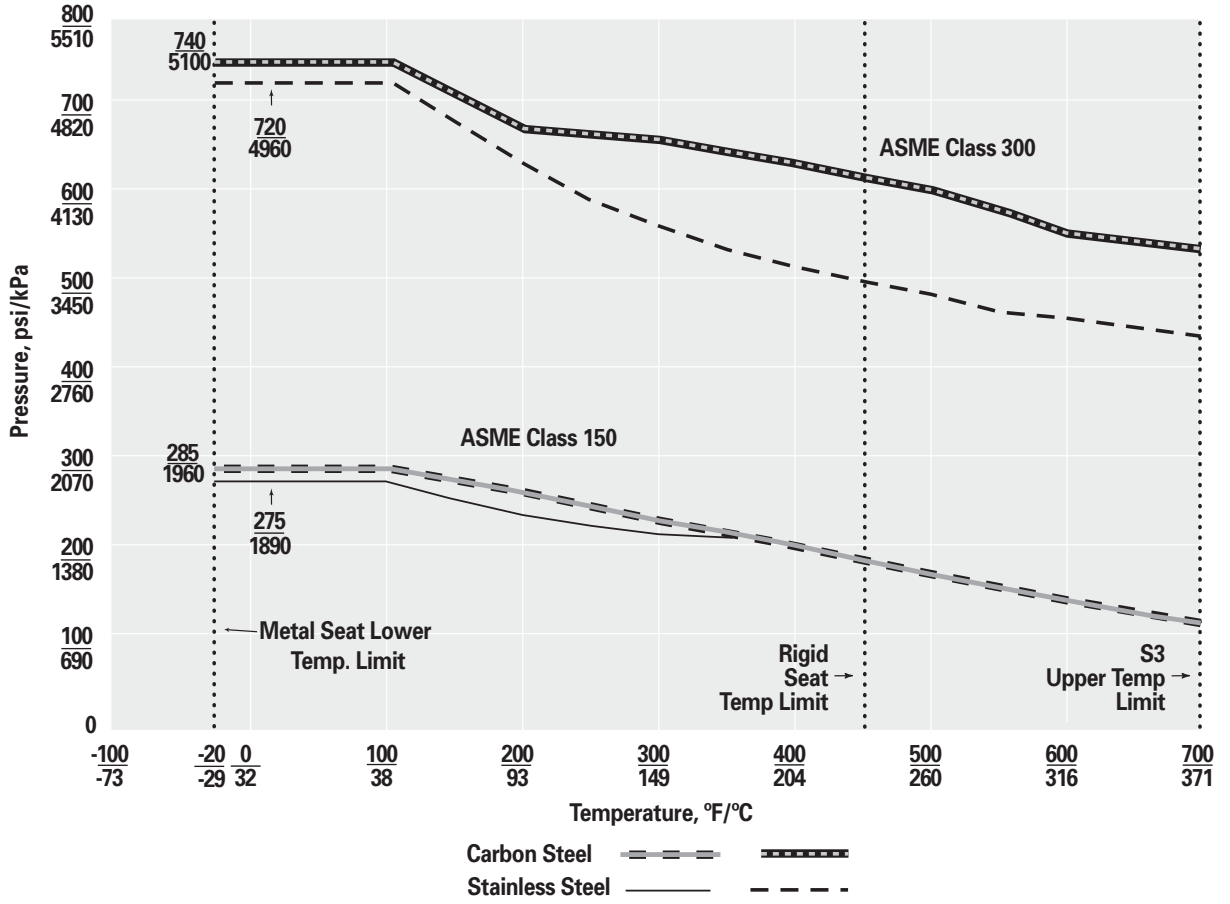

Shut-Off Capabilities

Seat type	Flow	Shut-Off Class (ANSI /FCI 70-2)
Flexible Metal*	Bi-Directional	IV
Rigid Metal	Uni-Directional	IV
Reinforced PTFE**	Uni-Directional	VI
Clearance Seat	Bi-Directional	5% of max flow when closed

NOTE: Uni-directional valves must be installed with flow-to-open (forward flow; flow into the convex side of ball). Flow-to-open is the preferred direction for bi-directional valves. Seats are rated to the full valve pressure rating unless noted below.

* Flexible metal seats are rated to 150 psi (1030kPa) pressure differential when installed in the flow-to-close direction.

** Reinforced PTFE seats are rated to 285 psi (1895 kPa) maximum shutoff pressure differential.

Ordering

To order, simply complete the valve order code from information shown. An ordering example is shown for your reference.

Valve Style
Give valve style code as follows:

VPB	=	V-Port Ball Valve

Valve Size
Give valve size code as follows:

1	=	1"	(25mm)	8	=	8"	(200mm)
1.5	=	1.5"	(40mm)	10	=	10"	(250mm)
2	=	2"	(50mm)	12	=	12"	(300mm)
2.5	=	2.5"	(65mm)	14	=	14"	(350mm)
3	=	3"	(80mm)	16	=	16"	(400mm)
4	=	4"	(100mm)	18	=	18"	(450mm)
6	=	6"	(150mm)	20	=	20"	(500mm)

End Connection
Give end connection code as follows:

Flangeless

W1S	=	Class 150, ANSI/ISA-75.08.02 and IEC 534-3-2-F 1-12" valves

Flanged

F1S	=	Class 150, ANSI/ISA-75.08.02 and IEC 534-3-2F-F 1-20" valves
F2S	=	Class 300, ANSI/ISA-75.08.02 and IEC 534-3-2F-F 1-12" valves
F1L	=	Class 150, ASME B16.10, ISO 5752 and EN 558-1 PN 10/16, 1-12" valves
F1A	=	Class 150, ASME B16.10, ISO 5752 and EN 558-1 PN 10/16 (Long body) 1-12" excluding 2.5" valve size.

Body Material
Give body material code as follows:

S3	=	317 stainless steel (Class 150 only) S3 bodies must be ordered with S3NH or S3S ball , S10 shaft and S3, S3S, S3R or RT seat.
CS	=	Carbon Steel. CS bodies must be ordered with S3NH or S3S ball, S10 shaft, and S3, S3S, S3R or RT seat.
S2	=	316 stainless steel (Class 300 only). S2 bodies must be ordered with S3NH or S3S ball, S5 or S10 shaft, and either S3, S3S, S3R or RT seat.
HC	=	Hastelloy C. HC body must be ordered with HCNH ball, HCC or TNC shaft, HCRI or RT seat, and HC, HCVS or HCKS bearings.

Packing Material
Give packing material code as follows:

TC	=	PTFE Chevron, to 500°F (260°C)
G2	=	Braided carbon graphite, to 1000°F (540°C) (Available with S3 seat and S9 or SL bearings)

Trim Combination
Give ball, shaft, seat and bearing codes as follows:

S3NH	=	317 stainless steel heat treated nickel overlay, to 700°F (370°C)
S3S	=	317 stainless steel with tungsten carbide overlay, to 1000°F (540°C) (Available with S3S, S3SI or S3 seats only)
HCNH	=	Hastelloy C with heat treated electroless nickel overlay, to 700°F (370°C)

Shaft Material

S10	=	2205 Duplex stainless steel
S5	=	17-4 PH stainless steel
HCC	=	Hastelloy C Ceramic Coated (HC Bearings only)
TNC	=	Titanium Ceramic Coated

Seat Material

RT	=	Reinforced PTFE, to 500°F (260°C)
S6N	=	Flexible Super Austenitic Stainless Steel (AL-6XN®) with heat treated electroless nickel overlay, to 700°F (370°C)
S5C	=	Clearance Seat, 17-4PH Stainless Steel to 1000°F (540°C)
S3R	=	Rigid 317 stainless steel with heat treated nickel overlay, to 450°F (230°C)
S3S	=	Rigid 317 stainless steel with tungsten carbide overlay, to 450°F (230°C)(Available with S3S Ball only)
S3RI	=	Rigid 317 stainless steel with heat treated electroless nickel overlay and nickel-chromium spring, to 450°F (230°C)
S3SI	=	Rigid 317 stainless steel with tungsten carbide overlay and nickel-chromium alloy spring, to 450°F (230°C)
HCRI	=	Rigid Hastelloy C with heat treated electroless nickel overlay and nickel-chromium alloy spring, to 450°F (230°C)

Bearing Material

FT	=	317 stainless steel wire mesh reinforced PTFE, to 500°F (260°C)
S9	=	440C stainless steel bearings, to 1000°F (540°C)
S9VS	=	440C stainless steel bearings with PFA Fluoropolymer seal to 450°F (230°C)
SL	=	Solid Cobalt-Chromium Alloy, to 1000°F (540°C)
SLVS	=	Solid Cobalt-Chromium Alloy with PFA Fluoropolymer seal, to 450°F (230°C)
SLKS	=	Solid Cobalt-Chromium Alloy with FFKM Perfluoroelastomer seal, to 550°F (288°C)

On Application

HC	=	Hastelloy C 1000°F (540°C)
HCVS	=	Hastelloy C with PFA Fluoropolymer seal, to 450°F (230°C)
HCKS	=	Hastelloy C with FFKM Perfluoroelastomer seal, to 550°F (288°C)

On Application
Give options code as follows:

BAA	=	Buy American Act
CMC	=	Certificate of Material Conformance
CRT	=	Certified Material Physical & Chemical Test Report
DTR	=	DeZURIK Standard Certified Production Hydrostatic Shell & Seat Test Report
ST3	=	Pennsylvania Steel Procurement Act
G1	=	DIN 10 or BS4504/10 Drilling (W1S, F1L & F1S only)
G2	=	DIN 16 or BS4504/16 Drilling (W1S, F1L & F1S only)
G3	=	DIN 25 or BS4504/25 Drilling (F2S only)
G4	=	DIN 40 or BS4504/40 Drilling (F2S only)
J1	=	J1S 10 Flange Drilling (F1L or F1S only)
J6	=	J1S 16 Flange Drilling (F1L or F1S only)
J2	=	J1S 20 Flange Drilling (F2S only)

On Application
Pressure Equipment Directive (CE Mark)

Ordering Example
VPB,4,F1L,S3,TC,S3NH-S10-RT-FT,G1*PR-R1A-PC4

Dimensions

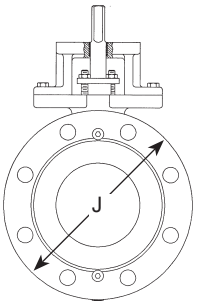

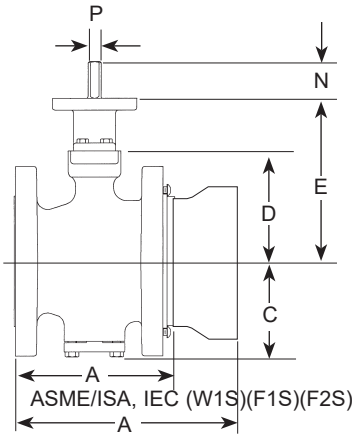

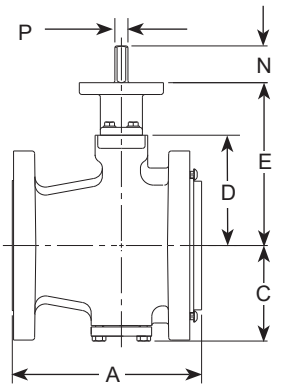

Basic Valve

Inches
Millimeters

Valve Size	A		C	D	E	J			N	P Diameter	P Square
	ASME /ISA IEC	ASME ISO EN				Flanged Class 150	Flangeless Class 150	Flanged Class 300			
1" 25mm	4.00 102	5.00 127	2.75 70	3.25 83	5.62 143	4.25 108	2.44 62	4.88 124	1.75 44	.62 16	.50 13
1.5" 40mm	4.50 114	6.50 165	2.94 75	3.47 88	5.84 148	5.00 127	3.06 78	6.12 155	1.75 44	.62 16	.50 13
2" 50mm	4.88 124	7.00 178	3.22 82	3.75 95	6.12 155	6.00 152	3.81 97	6.50 165	1.75 44	.62 16	.50 13
2.5" 65mm	5.50 140	7.50 191	3.75 95	4.44 113	6.94 176	7.00 178	4.38 111	7.50 190	1.75 44	.75 19	.62 16
3" 80mm	6.50 165	8.00 203	4.00 102	4.69 119	7.19 183	7.50 191	5.19 132	8.25 210	1.75 44	.75 19	.62 16
4" 100mm	7.62 194	9.00 229	4.56 116	5.25 133	7.75 197	9.00 229	6.38 162	10.00 254	1.75 44	.75 19	.62 16
6" 150mm	9.00 229	10.50 267	5.72 145	6.50 165	9.50 241	11.00 279	8.50 216	12.50 317	1.75 44	1.25 32	.94* 24
8" 200mm	9.56 243	11.50 292	7.28 185	8.12 206	11.12 282	13.50 343	10.62 270	15.00 381	1.75 44	1.50 38	1.19 30
10" 250mm	11.69 297	13.00 330	8.91 226	9.50 241	13.38 340	16.00 406	13.12 333	17.50 444	1.75 44	2.00 51	1.62** 41
12" 300mm	13.31 338	14.00 356	9.91 252	10.50 267	14.38 365	19.00 483	15.38 391	20.50 521	1.75 44	2.00 51	1.62 41
14" 350mm	15.75 400	—	10.86 276	11.47 291	15.34 390	21.00 533	—	—	1.75 44	2.00 51	1.62 41
16" 400mm	15.75 400	—	13.25 337	14.06 375	18.56 471	23.50 597	—	—	1.75 44	2.50 64	1.81 46
18" 450mm	18.00 457	—	14.44 367	15.25 387	19.75 502	25.00 635	—	—	1.75 44	2.50 64	1.81 46
20" 500mm	20.00 508	—	15.56 395	16.38 416	20.38 518	27.50 686	—	—	1.75 44	2.50 64	1.81 46

Note: All dimensions are subject to change without notice.
Request certified drawings for use in preparing piping layouts.

*6" (150mm) $\frac{.88}{22}$ for DR-40B actuators

**10" (250mm) $\frac{1.19}{30}$ for DR-85B actuators

Sales and Service

For information about our worldwide locations, approvals, certifications and local representative:
Web Site: DeZURIK.com **E-Mail:** info@DeZURIK.com

DeZURIK

250 Riverside Ave. N. Sartell, Minnesota 56377 • Phone: 320-259-2000 • Fax: 320-259-2227

DeZURIK, Inc. reserves the right to incorporate our latest design and material changes without notice or obligation. Design features, materials of construction and dimensional data, as described in this bulletin, are provided for your information only and should not be relied upon unless confirmed in writing by DeZURIK, Inc. Certified drawings are available upon request.

16-FCV-301-1/2/3/4

January 23, 2024

APPROVAL DRAWINGS

PROJECT NAME

360077 - V-Port Control

PURCHASE ORDER

VALVE TYPE

V-Port Ball Valve (VPB)

CUSTOMER:	VEOLIA WATER TECHNOLOGIES & 3239 DUNDAS STREET W. OAKVILLE ON L6M 4B2 Canada
LOCAL SUPPLIER:	Floval Equipment Ltd 250 Rayette Road, Unit 1 Concord Ontario L4K 2G6 Canada
MANUFACTURER:	DeZURIK Canada 385 Franklin Boulevard Cambridge ON N1R 5V5 Canada

TABLE OF CONTENTS

A Data Sheet is included for each line item on the purchase order.
Document numbers are listed at the bottom of the Data Sheet.
Any one drawing may apply to more than one item number.
All documents are assembled in alpha/numeric order within each section.

Data Sheets
Installation Drawing
Materials Of Construction
Recommended Long & Short Term Storage Procedures

Submittal Data Sheet
Date:January 23, 2024

VEOLIA WATER TECHNOLOGIES &
3239 DUNDAS STREET W.
OAKVILLE ON L6M 4B2
Canada

PROJ. NAME 360077 - V-Port Control Valves,

LINE #	Cust LINE #	QTY	PART NO.	DESCRIPTION
1		4		

Style	V-Port Ball Valve (VPB)
Size	16 Inch (400mm)
End Connection	Flanged Drilling; Class 150, ISA 75.08.02 and IEC 534-3-2F-F
Body Material	317 Stainless Steel
Packing	PTFE Chevron; Temperature to 500° F. (250° C.)
Ball Material	317 SST; Heat Treated; Electroless Nickel Overlay to 700 Degree F.
Shaft Material	2205 Duplex Stainless Steel
Seat	Rigid 317 Stainless Steel; Heat Treated; Electroless Nickel Overlay; Temperature to 450 Degree F.
Bushing	317 SST Wire Mesh Encapsulated in PTFE Liner to 500 Degree F.
Coating	Exterior: 4 mils minimum of Blue Epoxy DeZURIK with Standard (SP10) surface prep
Actuator	PowerRac Cylinder; 8 In Dia

Valve Weight (Approx)	777 lbs/ 353 kgs
Temperature Range	to 450 Degrees F.

RELATED DOCUMENTS

A41883: DWG INST VPB F1L/F1S PR-R2A-PC 10-18"
A45453: DWG INST VAL VPB F1* ISO
A45077: DWG VALVE ASSY F VPB ISO
A37260: DWG ACT-CYL ASSY PR-R*-PC
A37259: DWG ACT CYL ASSY PNEU PR-PC*
A39819: DWG CONN PARTS PR/MG/DR/CMD/LT
D10268: IM ACT POWER RAC R1A/R2A
D10324: IM VALVE VPB

VALVE SIZE		DIMENSIONS INCHES / MILLIMETERS											
		A		B	C	D	E	F	G		H	J	K	
IN	MM	ISA	ASME										ISA	ASME
10	250	11.69 / 297	13.00 / 330	5.50 / 140	8.91 / 226	9.50 / 241	13.38 / 340	1.31 / 33	12	1.00 / 25	14.25 / 362	16.00 / 406	1.88 / 48	3.19 / 81
12	300	13.31 / 338	14.00 / 356	6.38 / 162	9.91 / 252	10.50 / 267	14.38 / 365	1.38 / 35	12	1.00 / 25	17.00 / 432	19.00 / 483	1.94 / 49	2.62 / 67
14	350	15.75 / 400		7.50 / 191	10.86 / 276	11.47 / 291	15.34 / 390	1.50 / 38	12	1.12 / 28	18.75 / 476	21.00 / 533	2.31 / 59	
16	400	15.75 / 400		6.69 / 170	13.25 / 337	14.06 / 357	17.56 / 446	1.62 / 41	16	1.12 / 28	21.25 / 540	23.50 / 597	2.69 / 68	
18	450	18.00 / 457		7.62 / 194	14.44 / 367	15.25 / 387	18.75 / 476	1.75 / 44	16	1.25 / 32	22.75 / 578	25.75 / 654	2.81 / 71	

ACTUATOR NUMBER	DIMENSIONS INCHES / MILLIMETERS		
	M	N	P
PR_–R2_–PC6	3.38 / 86	6.62 / 168	16.00 / 406
PR_–R2_–PC8	4.81 / 122	10.25 / 260	16.12 / 409

A	VALVE
B	ACTUATOR
C	CYLINDER
P	CONNECTING PARTS

NOTE:

1. FACE TO FACE DIMENSIONS PER ASME STANDARD B16.10 (F1L) OR ISA STANDARD 75.08.02 (F1S).
2. SEE A40129 FOR NON–ASME FLANGE DRILLING.

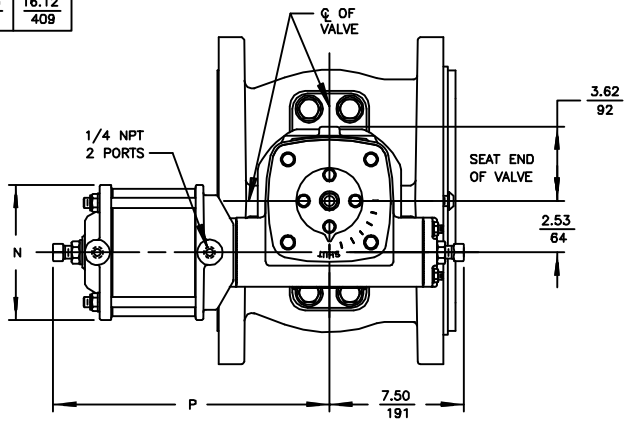

NOTICE
THIS DRAWING DOES NOT SHOW ACTUATOR ACCESSORIES. IF ACCESSORIES ARE REQUIRED, REFER TO THE APPROPRIATE ACCESSORY INSTALLATION DRAWING FOR DIMENSIONS AND OTHER RELATED INFORMATION.

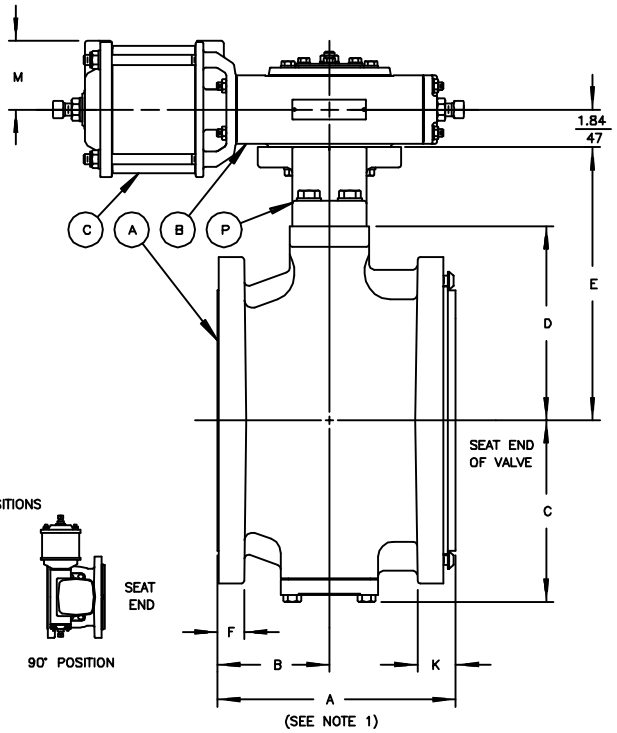

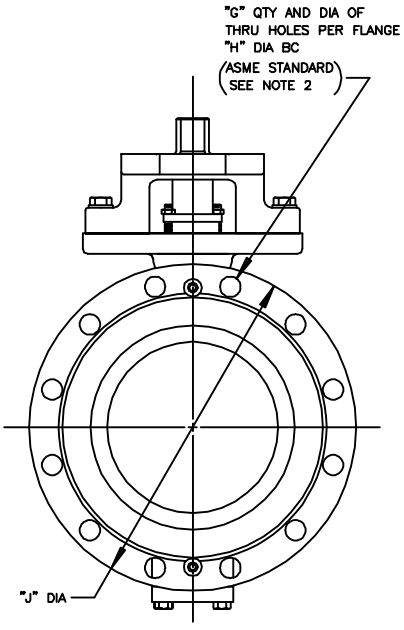

ACTUATOR MOUNTING POSITIONS

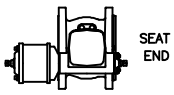

STANDARD POSITION SHOWN ON THIS DRAWING

90° POSITION

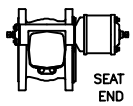

180° POSITION

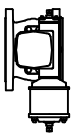

270° POSITION

G	F	E	D	C	B	A
		60312	63393	52892	53177	59376
		02/01/16	04/25/17	11/27/96	04/18/95	05/28/93

DeZURIK
APCO | HILTON
www.dezurik.com

VPB V–PORT BALL VALVES (F1L)(F1S) SIZE 10–18 CL150 FLANGED POWERRACK PR_–R2_–PC_ PNEUMATIC CYLINDER ACTUATOR

DOCT. CODE	DRAWN	APPROVED	
C1	JS	FC	A41883
	CHECKED TNB	DATE 01–28–93	

VALVE SIZE	DIMENSIONS INCHES / MILLIMETERS															
	A		B	C	D	E	F	G		H	J	K		L	M	
	ISA	ASME										ISA	ASME		INCHES	M/M
16	15.75 / 400		6.69 / 170	13.25 / 337	14.06 / 357	19.31 / 490	1.62 / 41	16	1.12 / 28	21.25 / 540	23.50 / 597	2.69 / 68		10.75 / 273	1.810 / 1.805	45.97 / 45.84
18	18.00 / 457		7.62 / 194	14.44 / 367	15.25 / 387	20.50 / 521	1.75 / 44	16	1.25 / 32	22.75 / 578	25.75 / 654	2.81 / 71		10.75 / 273	1.810 / 1.805	45.97 / 45.84
20	20.00 / 508		8.50 / 216	15.56 / 395	16.38 / 416	21.62 / 549	1.88 / 48	20	1.25 / 32	25.00 / 635	28.25 / 718	2.94 / 75		10.75 / 273	1.810 / 1.805	45.97 / 45.84

VALVE SIZE	DIMENSIONS INCHES / MILLIMETERS							
	N	P		R	S	T	U	V
		INCHES	M/M					
16	4.88 / 124	2.500 / 2.498	63.50 / 63.45	4.500 / 114.30	.938 / 23.83	5/8–11 UNC	2.25 / 57	4.62 / 117
18	4.88 / 124	2.500 / 2.498	63.50 / 63.45	4.500 / 114.30	.938 / 23.83	5/8–11 UNC	2.25 / 57	4.62 / 117
20	4.88 / 124	2.500 / 2.498	63.50 / 63.45	4.500 / 114.30	.938 / 23.83	5/8–11 UNC	2.25 / 57	4.62 / 117

NOTE:

1. FACE TO FACE DIMENSIONS PER ISA STANDARD 75.08.02 (F1S).
2. SEE A40129 FOR NON–ASME FLANGE DRILLING.

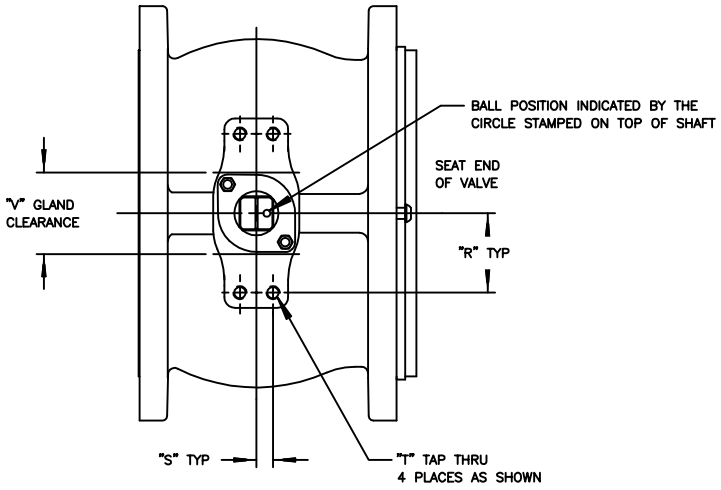

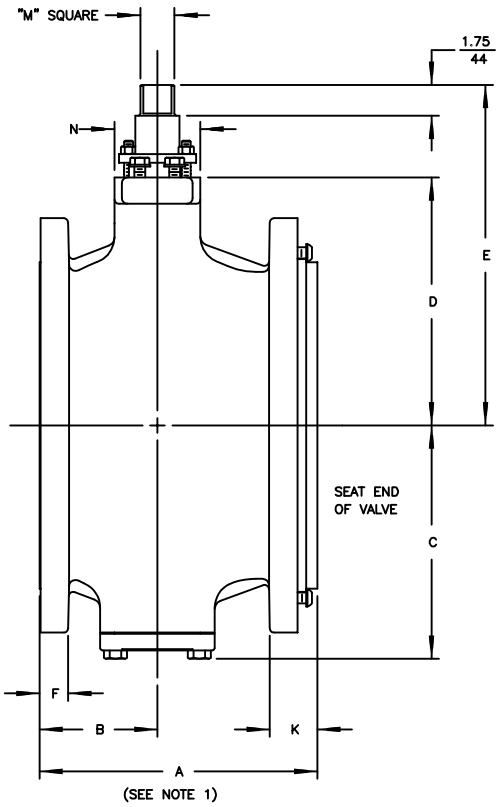

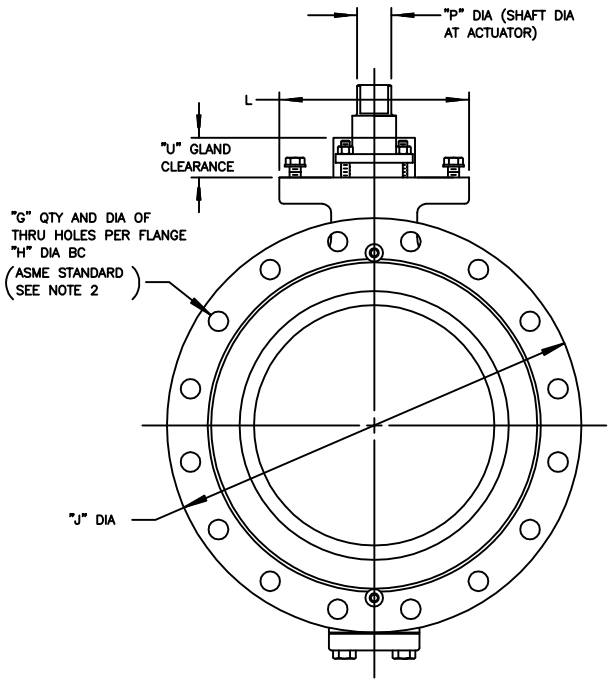

G	F	E	D	C	63393	53759	53227
					04/28/17	12/06/07	05/29/95

DeZURIK
APCO | HILTON
www.dezurik.com

VPB V–PORT BALL VALVES (F1S)
SIZE 16 – 20 CLASS 150 FLANGED

DOCT. CODE	DRAWN	APPROVED	
C1	CHECKED RJP	DATE 02/14/95	A45453

Materials Of Construction

DRAWING(S): A45077(A00)
QUOTE:
DESCRIPTION: V

ITEM	MATERIAL
A01	STAINLESS STEEL, TYPE CG-8M, ASTM A351, CERTIFIED
A02	STAINLESS STEEL, TYPE CG-8M, ASTM A351, CERTIFIED, NICKEL PLATED, HEAT TREATED
A03	STAINLESS STEEL, TYPE CG-8M, ASTM A351, CERTIFIED
A04	STAINLESS STEEL, TYPE 18-8
A05	GRAPHITE
A06	STAINLESS STEEL, S31803, ASTM A479, CERTIFIED (ALLOY 2205)
A07	STAINLESS STEEL, TYPE 316
A08	STAINLESS STEEL, TYPE 316
A09	STAINLESS STEEL, TYPE CG-8M, ASTM A351, CERTIFIED
A10	PACKING, V-FLEX, VIRGIN TEFLON
A11	STAINLESS STEEL, TYPE 317, ASTM A240/A276, CERTIFIED
A12	TETRAFLUOROETHYLENE (TEFLON) WITH 317 STAINLESS STEEL BACKING
A13	ALLOY 20
A16	STAINLESS STEEL, TYPE 317, ASTM A240/A276 CERTIFIED, NICKEL PLATED, HEAT TREATED
A18	STAINLESS STEEL, S31803, ASTM A479, CERTIFIED (ALLOY 2205)
A19	TETRAFLUOROETHYLENE (TEFLON) WITH 317 STAINLESS STEEL BACKING
A20	TETRAFLUOROETHYLENE (TEFLON) WITH 317 STAINLESS STEEL BACKING
A21	GRAPHITE
A22	STAINLESS STEEL, TYPE CG-8M, ASTM A351, CERTIFIED
A23	STAINLESS STEEL, TYPE 316, ASTM A-193, GRADE B8M
A27	STAINLESS STEEL, TYPE 316
A28	STAINLESS STEEL, TYPE 316

A31	TETRAFLUOROETHYLENE (TEFLON) WITH FLOURO RUBBER (FKM) CORE
A32	STAINLESS STEEL 17-7 PH

DeZURIK
250 Riverside Avenue North
Sartell, MN 56377 USA
Ph: 320-259-2000

RECOMMENDED LONG & SHORT TERM STORAGE PROCEDURES

LONG TERM STORAGE (6 MONTHS +)

1. All valves shall be stored in the position in which they were shipped.

2. Valves shall be stored fully enclosed in a crate or on a skid. It is acceptable to store the valves uncrated but protected from any dirt, debris or UV exposure as long as the environmental conditions as described in item 3 are met. Any desiccant packages received with the original shipment should be replaced before putting valves into long term storage. Please follow your desiccant manufacturer's recommended usage of any desiccant based on the volume of the enclosed area.

3. Valves shall be stored in a well ventilated, clean, dry indoor facility on skids or raised racks with temperatures ranging from 35°F to 95°F (2°C to 35°C) with humidity levels not exceeding 50%.

4. If the above conditions cannot be met, valves shall be separately packaged inside sealed heavy duty plastic sheeting and a weather resistant enclosure, or a standard crate lined with moisture proof paper, to protect the valves from dirt, debris and UV exposure. Desiccant packages shall be used to control moisture both inside the enclosure and the sealed heavy duty plastic covering. Please follow your desiccant manufacturer's recommended usage of any desiccant based on the volume of the enclosed area.

5. Do not store valves next to operating electric motors or equipment which may emit ozone, which can cause deterioration of valve elastomers. Store in an environment with less than 0.1 ppm concentration, at least 25 feet from ozone emitting devices, with ventilation.

6. Valves with cylinder actuators and control valves which are stored for extended periods may be subject to cylinder blow-by caused by permanent distortion of any of the seals. Valves should be operated prior to installation and damaged seals replaced. If possible, it is recommended that cylinders be cycled every 4-6 months to maintain seals.

7. Valves with electric motor operators shall be stored in accordance with the individual motor manufacturer's recommended long term storage procedures.

8. All electrical components shall be visually inspected prior to valve installation.

SHORT TERM STORAGE (LESS THAN 6 MONTHS)

1. All valves shall be stored in the position in which they were shipped.

2. Valves shall be protected from dirt, debris, excessive moisture and UV exposure. Store at temperatures ranging from 35°F to 95°F (2°C to 35°C) with humidity levels not exceeding 50%.

Form 1454 Rev A
(Y67834 references this form)

info@dezurik.com
www.dezurik.com

Series 800 Overview

- Available in sizes 2" to 20".
- Only fully elastomer lined check valve available.
- Bubble-tight shutoff from 25 to 150 psi ΔP. Lower minimum pressure available on request.
- Wide range of available elastomers; Buna-N or EPDM standard.
- Check valves compatible with ASME B16.1, Class 125 (Iron) or B16.5, Class 150 (Steel) flanges.
- Use of dual springs distributes the load force evenly across each plate, resulting in quick response to flow reversal.
- Commercial cleaning available for Oxygen level 2.
- CE/PED Certification available for sizes 2" to 24".

Liner Temperature Ratings

Material	Temperature Ratings °F
Buna-N (Standard)	+10 to 180
EPDM (Standard)	-30 to 275
Neoprene	+20 to 200
Viton®	+10 to 400

Some flow media may further restrict the published temperature limits and/or significantly reduce seat life. Consult factory for additional information.

Fig. 1

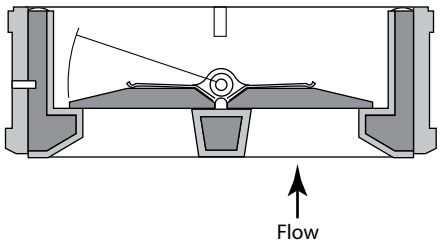

For flow going up recommended installation sizes: 2" - 20". For flow going down, consult factory.

Fig. 2

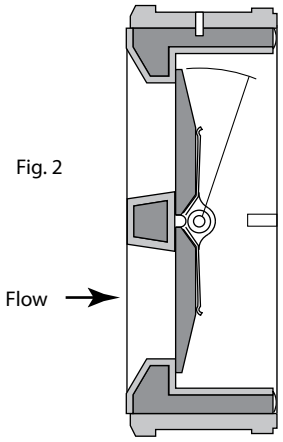

Valve should be installed with shaft in the vertical position in a horizontal pipe. This view rotated 90° for pictorial clarity.

C_v Values – Valve Sizing Coefficients (US-GPM @ 1ΔP)

Valve Size	C_v	Cracking Pressure To Open Valve (Inches of Water Column)*		
		Figure 1	Figure 2	Figure 3
2"	36	14	10	5
2 ½"	62	18	12	6
3"	123	11	7	2
4"	281	10	6	2
5"	522	14	10	6
6"	1033	12	8	5
8"	2158	12	9	5
10"	3368	14	13	8
12"	5068	15	10	6
14"	6465	20	12	6
16"	9172	20	12	6
18"	12,853	16	10	–
20"	17,398	24	16	–

*Figures are approximate. 1" of water column = .036 psi.

Series 800 Dimensions and Materials of Construction

Dimensions (in [mm]) and Weights (lbs [kg])

For installation and maintenance instructions, please refer to the IOM manual

Valve Size	A	B	C	D	E	F	G	H	J	K	Weight
2 (50)	6.25 (158.75)	4.35 (110.49)	3.34 (84.14)	2.62 (66.68)	2.00 (51.00)	4.81 (122.17)	0.82 (20.80)	1.12 (47.63)	1.88 (47.63)	2.12 (53.98)	5 (2.27)
2 1/2 (65)	7.00 (177.80)	5.13 (130.30)	3.9 (98.43)	3.12 (79.38)	2.00 (51.00)	5.63 (143.00)	0.82 (20.80)	1.44 (36.51)	2.31 (58.74)	2.12 (53.98)	6 (2.72)
3 (80)	7.50 (190.50)	5.50 (139.70)	4.56 (115.89)	3.62 (92.08)	2.00 (51.00)	6.20 (157.48)	0.88 (22.35)	1.62 (41.28)	2.75 (69.85)	2.12 (53.98)	8 (3.63)
4 (100)	9.25 (234.95)	5.75 (146.05)	5.62 (142.88)	4.62 (117.48)	2.37 (60.19)	7.28 (184.91)	0.94 (23.87)	2.12 (53.98)	3.44 (87.31)	2.50 (63.50)	15 (6.81)
5 (125)	10.62 (269.88)	7.62 (193.68)	6.75 (171.45)	5.69 (144.46)	2.50 (63.50)	8.44 (214.37)	0.88 (22.35)	2.66 (67.47)	4.44 (112.71)	2.62 (66.68)	20 (9.08)
6 (150)	12.00 (304.80)	8.75 (222.25)	7.88 (200.03)	6.75 (171.45)	3.00 (76.20)	9.44 (239.77)	0.88 (22.35)	3.16 (80.17)	5.56 (141.29)	3.12 (79.38)	26 (11.80)
8 (200)	14.50 (368.30)	10.62 (269.88)	10.00 (254.00)	8.75 (222.25)	3.75 (95.25)	11.66 (296.16)	0.91 (23.11)	4.16 (105.57)	7.56 (192.09)	3.88 (98.43)	43 (19.52)
10 (250)	16.88 (428.63)	13.25 (336.55)	12.12 (307.98)	10.88 (276.23)	3.86 (98.04)	14.06 (357.12)	1.14 (28.95)	5.12 (130.18)	9.06 (230.19)	4.00 (101.60)	58 (26.33)
12 (300)	19.50 (495.30)	16.00 (406.40)	14.38 (365.13)	12.88 (327.03)	5.00 (127.00)	16.14 (409.95)	1.02 (25.90)	6.25 (158.75)	10.81 (274.64)	5.12 (130.18)	100 (45.40)
14 (350)	22.50 (571.50)	17.00 (431.80)	15.62 (396.88)	14.12 (358.78)	7.00 (177.80)	18.65 (473.71)	1.72 (43.68)	6.75 (171.45)	12.06 (306.39)	7.12 (180.98)	135 (61.29)
16 (400)	24.88 (631.83)	20.12 (511.18)	17.75 (450.85)	16.12 (409.58)	6.25 (158.75)	21.25 (539.75)	1.06 (26.99)	7.75 (196.85)	14.00 (355.60)	6.38 (161.93)	170 (77.18)
18 (450)	25.25 (641.35)	21.50 (546.10)	20.00 (508.00)	18.12 (460.37)	7.13 (181.10)	22.75 (577.85)	1.19 (30.16)	8.75 (222.25)	16.00 (406.14)	7.25 (184.15)	220 (99.88)
20 (500)	27.50 (698.50)	23.50 (596.90)	21.88 (555.62)	20.12 (511.17)	8.38 (212.72)	25.00 (635.00)	1.19 (30.16)	9.75 (247.65)	18.12 (469.90)	8.50 (215.90)	287 (130.30)

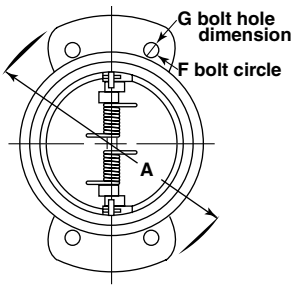

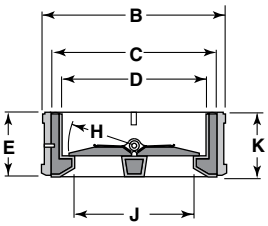

Notes:

Preferred mounting of check valves of any manufacturer is 8 pipe diameters downstream from the pump discharge or pipe elbow. If this is not feasible, the valve should be mounted downstream as far as possible. This recommendation is not exclusive to Center Line valves, but common practice in valve and piping engineering. Its purpose is to reduce the likelihood of turbulent flow through the valve, which could shorten valve life due to component vibration.

These dimensions reflect the universal bolting pattern valve.

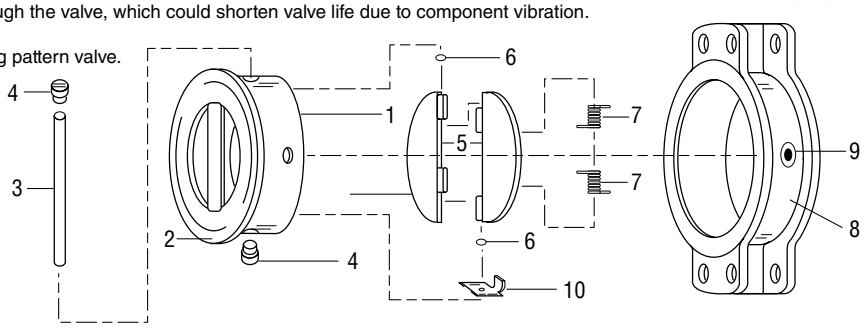

Bill of Materials

Item	Description	Materials	Optional Materials
1	Valve Body	Ductile Iron	No option available
2	Liner (Molded to Item 1)	Buna-N or EPDM	Neoprene, Viton®
3	Shaft	316 Stainless Steel	Monel®
4	Shaft Plug (Qty. 2)	316 Stainless Steel	Monel®
5	Plate (Qty. 2)	2" 316 Stainless Steel 2½" -5" Aluminum Bronze 6"-20" Ductile Iron	2"-12" Monel® 2½"-12" 316 Stainless Steel 6"-20" Aluminum Bronze
6	Thrust Washer (Qty. 4)	PTFE	No option available
7	Spring (Qty. 2)	316 Stainless Steel	No option available
8	Alignment Body	Ductile Iron	No option available
9	Set Screw	Carbon Steel	No option available
10	Plate Travel Stop	316 Stainless Steel (14"-20")	No option available

* Items 1 and 2 must be ordered together.

Handle Features and Dimensions

Handles are available for on/off and throttling control of Center Line resilient seated butterfly valves. These handles can be used for manual actuation of 2" to 12" valves at 200 psi and for 2" to 6" valves at 285 psi. For valves larger than 8", excessive operator effort and extreme handle reaction to internal valve forces are possible. In these cases, a gear operator is recommended for safe operation.



Features

The rugged construction of Center Line handles makes them ideally suited for manually actuating smaller valves. The latchplate permits the valve to be locked in any of the 10 positions on DIT handles or in any position on IOL handles.

Specifications

DIT — Mechanically locks the valve in any of the 10 positions from 0° to 90° in 10° increments

DIT/IOL — Can hold the valve in intermediate positions (32°, 68°, etc.) and can also be locked in 0° and 90° positions

Dimensions and Weights

Valve Size		A	B	Weight DIT	Weight DIT/IOL
2–6	in.	2.25	10.5	1.8	2.0
50–150	mm	57.15	266.7	0.8	0.9
8–12	in.	3.34	14.0	4.0	-
200–300	mm	84.84	355.6	1.8	-

Plates are adaptable for ISO or standard mounting flange.

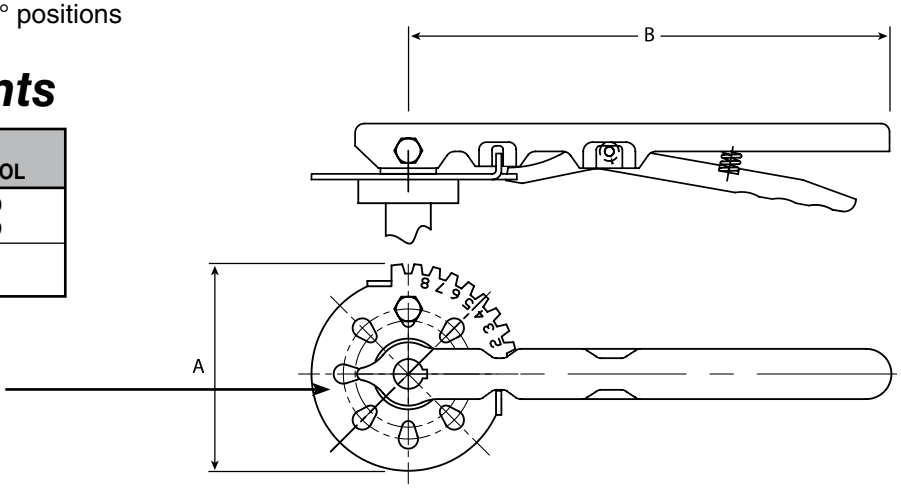

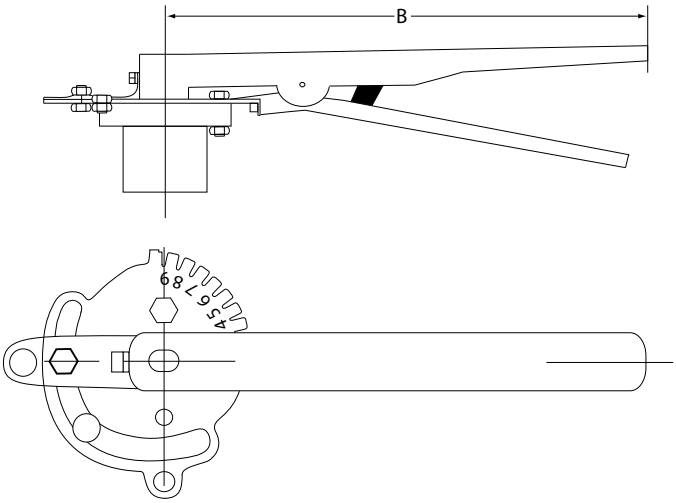

Gear Operators **Features and Dimensions**

Gear operators can be used for on/off and throttling control of Center Line resilient seated butterfly valves. All models are weatherproof and usable for above ground service. Consult factory for buried service gears. For manual operation of valves, gear operators are required for valves 14" and larger and are recommended for valves 8" and larger.



Features

Gear operators from Center Line are 90° manual actuators, and they come with a handwheel, chainwheel, or square nut input device. The durable housing completely encloses the worm gear (on the input shaft) and the segment gear (on the output). Adjustable stops are standard and factory set when installed at the factory. Fully adjustable memory stops are available as an option. A position indicator is standard on all models for above ground service.

Specifications

Operation Handwheel or chainwheel or 2" square nut. Input shaft extension available.

Mounting Available with bolt patterns and bore/keyway for direct mount to all 2" through 30" Center Line resilient seated butterfly valves. Dual bolt patterns accommodate different pad designs. Gears are drilled for ISO pattern through 24". Contact factory for 30" and above.

Dimensions and Weights

Valve Size (Drawing 1)		A	A1	C	E	F	G	H	Ø1	J	ØK	M	D	P	Q	Ø	ØD2	ØE	Wt. (Kg.)
2–6	in.	12.56	9.52	10.72	2.52	1.46	2.36	6.00	0.76	1.36	0.24	1.66	3.68	3.36	7.06	12.00	6.08	1.52	27.1
50–150	mm	314.00	238.00	268.00	63.00	37.00	59.00	150.00	19.00	34.00	6.00	41.50	92.00	84.00	176.50	300.00	152.00	38.00	(12.3)
8–14	in.	12.28	9.04	10.60	3.12	1.54	2.74	5.12	0.76	1.36	0.24	1.53	5.60	3.36	7.90	12.00	6.48	1.52	31.7
200–350	mm	307.00	226.00	265.00	78.00	38.50	68.50	128.00	19.00	34.00	6.00	38.20	140.00	84.00	197.50	300.00	162.00	38.00	(14.4)
16–18	in.	16.28	11.08	13.76	4.80	1.60	4.08	5.60	1.00	1.36	0.32	2.28	7.88	5.00	11.60	18.00	10.40	2.00	77.4
400–450	mm	407.00	277.00	344.00	120.00	40.00	102.00	140.00	25.00	34.00	8.00	57.00	197.00	125.00	290.00	450.00	260.00	50.00	(35.2)

Valve Size (Drawing 2)		A	B	C	D	E	F	Ø	Ø1	Ø2	Wt. (Kg.)
20	in.	7.40	6.40	4.40	18.90	4.60	2.50	18.00	0.98	0.32	121.0
500	mm	185.00	160.00	110.00	473.00	115.00	63.00	450.00	25.00	8.00	(55.0)
24	in.	7.40	6.40	5.00	20.00	4.80	2.50	18.00	0.98	0.32	132.0
600	mm	185.00	160.00	125.00	500.00	120.00	63.00	450.00	25.00	8.00	(60.0)
28	in.	N/A	N/A	N/A	N/A	N/A	N/A	N/A	N/A	N/A	N/A
700	mm	N/A	N/A	N/A	N/A	N/A	N/A	N/A	N/A	N/A	N/A
30	in.	10.60	6.60	6.40	21.80	5.12	3.12	18.00	0.98	0.32	198.0
750	mm	265.00	165.00	160.00	545.00	128.00	78.00	450.00	25.00	8.00	(90.0)
32	in.	9.72	6.92	6.48	21.20	6.56	3.52	17.40	0.98	0.32	292.6
800	mm	243.00	173.00	162.00	530.00	164.00	88.00	435.00	25.00	8.00	(133.0)
36	in.	11.12	8.04	7.84	21.44	10.32	5.04	17.40	0.98	0.32	424.6
900	mm	278.00	201.00	196.00	611.00	258.00	126.00	435.00	25.00	8.00	(193.0)
40	in.	N/A	N/A	N/A	N/A	N/A	N/A	N/A	N/A	N/A	N/A
1000	mm	N/A	N/A	N/A	N/A	N/A	N/A	N/A	N/A	N/A	N/A
42	in.	16.72	10.20	9.60	25.56	12.40	5.04	17.40	0.98	0.32	792.0
1050	mm	418.00	255.00	240.00	611.00	310.00	126.00	435.00	25.00	8.00	(360.0)
48	in.	16.72	10.20	9.60	25.56	12.40	5.04	17.40	0.98	0.32	792.0
1200	mm	418.00	255.00	240.00	639.00	310.00	126.00	435.00	25.00	8.00	(360.0)

Some sizes Series 200 and 225/250 require different operators, please consult factory.

Gear Operators **Dimensions**

Drawing 1 (for sizes 2" - 18")

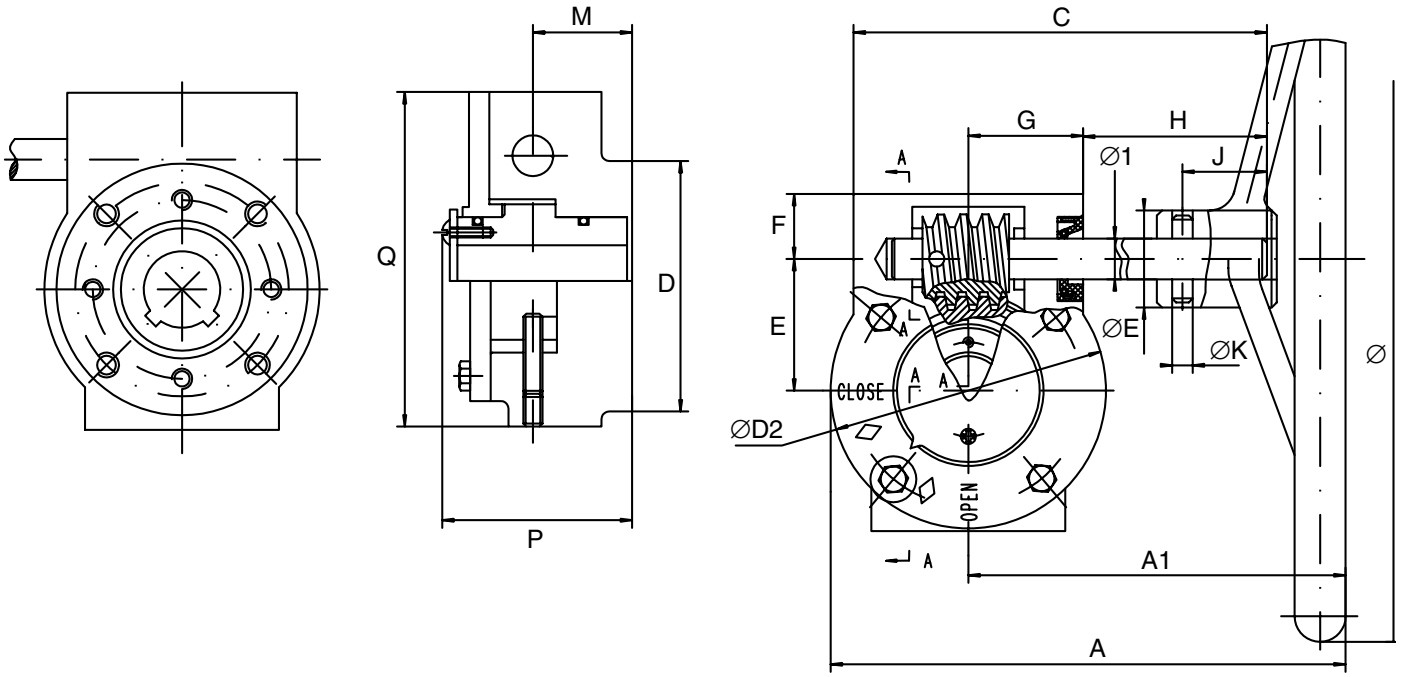

Drawing 2 (for sizes 20" and larger)

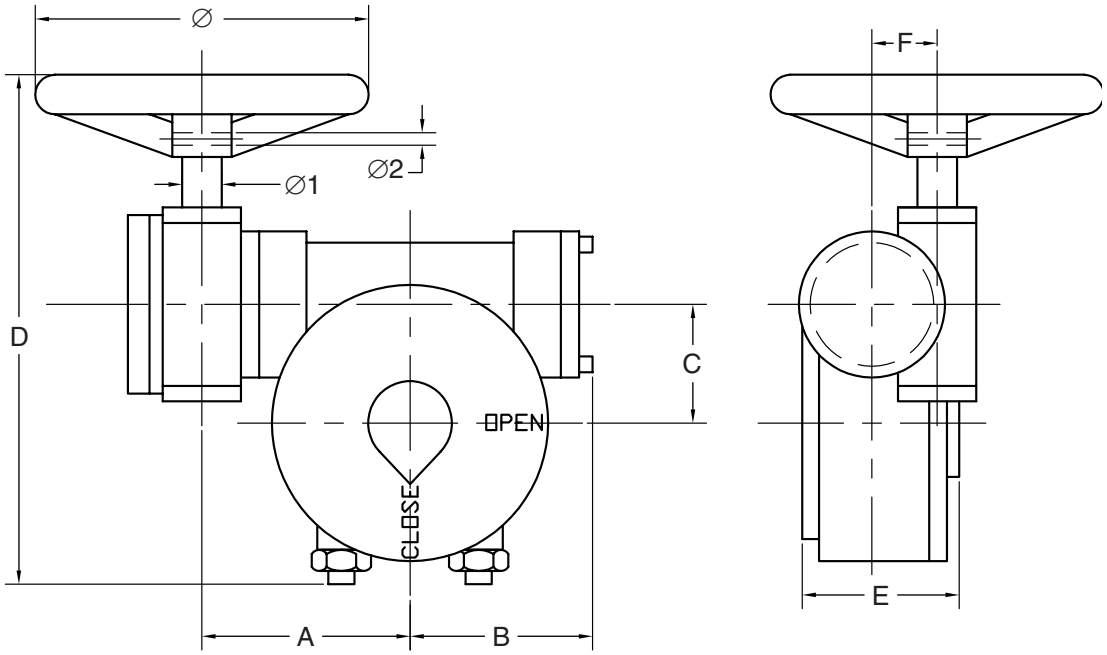

Gear Operators **Dimensions**

Gear Operator Drilling Patterns

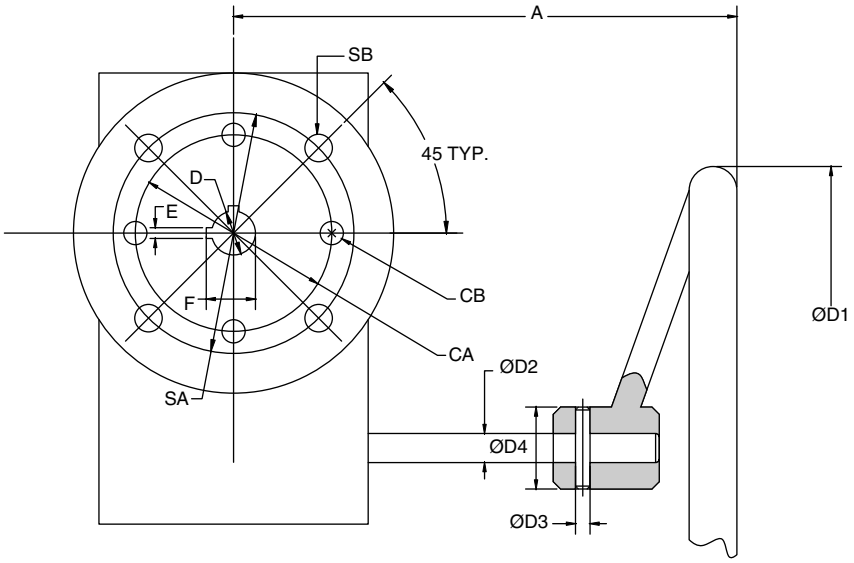

Dimensions

Valve Size		CA	CB	SA	SB	D	ØD1	ØD2	ØD3	ØD4	A	E	F
2	in.	2.25	M6-1	2.76	M8-15	0.50	11.81	0.75	0.24	1.50	9.37	0.13	0.56
50	mm	57.15		70.00		12.70	300.00	19.00	6.00	38.00	238.00	3.18	14.30
3	in.	2.25	M6-1	2.76	M8-15	0.50	11.81	0.75	0.24	1.50	9.37	0.13	0.56
80	mm	57.15		70.00		12.70	300.00	19.00	6.00	38.00	238.00	3.18	14.30
4	in.	2.75	M8-1.25	2.76	M8-15	0.63	11.81	0.75	0.24	1.50	9.37	0.19	0.72
100	mm	69.85		70.00		15.90	300.00	19.00	6.00	38.00	238.00	4.76	18.30
5	in.	2.75	M8-1.25	2.76	M8-15	0.75	11.81	0.75	0.24	1.50	9.37	0.19	0.84
125	mm	69.85		70.00		19.05	300.00	19.00	6.00	38.00	238.00	4.76	21.40
6	in.	2.75	M8-1.25	2.76	M8-15	0.75	11.81	0.75	0.24	1.50	9.37	0.19	0.84
150	mm	69.85		70.00		19.05	300.00	19.00	6.00	38.00	238.00	4.76	21.40
8	in.	3.50	M12-1.75	4.02	M10-18	0.87	11.81	0.75	0.24	1.50	8.89	0.19	0.97
200	mm	88.90		102.00		22.20	300.00	19.00	6.00	38.00	226.00	4.76	24.50
10	in.	3.50	M12-1.75	4.02	M10-18	1.13	11.81	0.75	0.24	1.50	8.89	0.25	1.25
250	mm	88.90		102.00		28.60	300.00	19.00	6.00	38.00	226.00	6.35	31.80
12	in.	4.25	M12-1.75	4.02	M10-18	1.25	11.81	0.75	0.24	1.50	8.89	0.25	1.39
300	mm	107.95		102.00		31.80	300.00	19.00	6.00	38.00	226.00	6.35	35.00
14	in.	4.25	M12-1.75	4.02	M10-18	1.25	11.81	0.75	0.24	1.50	8.89	0.25	1.39
350	mm	107.95		102.00		31.80	300.00	19.00	6.00	38.00	226.00	6.35	35.00
16	in.	6.25	M18-2.5	6.50	M20-26	1.31	18.00	0.98	0.32	1.99	10.90	0.31	1.49
400	mm	158.75		165.00		33.30	450.00	25.00	8.00	50.00	277.00	7.90	37.30
18	in.	6.25	M18-2.5	6.50	M20-26	1.50	18.00	0.98	0.32	1.99	10.90	0.38	1.69
450	mm	158.75		165.00		38.10	450.00	25.00	8.00	50.00	277.00	9.53	42.80
18	in.	6.25	M18-2.5	6.50	M20-26	1.63	18.00	0.98	0.32	1.99	12.64	0.38	1.81
450	mm	158.75		165.00		41.30	450.00	25.00	8.00	50.00	321.00	9.53	46.00
20	in.	6.25	M18-2.5	6.50	M20-26	1.63	18.00	0.98	0.32	1.99	12.64	0.38	1.81
500	mm	158.75		165.00		41.30	450.00	25.00	8.00	50.00	321.00	9.53	46.00
24	in.	8.50	M20-2.5	6.50	M20-26	2.00	18.00	0.98	0.32	1.99	13.19	0.50	2.24
600	mm	215.90		165.00		50.80	450.00	25.00	8.00	50.00	335.00	12.70	56.80

Series 800 Figure Number System

Series 800

1	1	2	3	4	5	6	7	8	9

1. Size	Code
2"	02
2½"	25
3"	03
to	
20"	20

2. Series/Style	Code
Wafer	R
Euro	W

3. Body	Code
Ductile Iron	1
Epoxy Coated DI (A536)	S

4. Pressure	Code
150 PSI	6

5. Plate	Code
316 SS (2"-14")	4
Ductile Iron (6"-20")	5
Aluminum Bronze (2.5"-20")	6
Monel® (2"-8")	7

6. Shaft	Code
316 SS	4
Monel®	7

7. Springs	Code
316 SS	D
Monel® 400	M

8. Seat/Liner	Code
Buna-N	1
Neoprene	3
EPDM	5
Viton®	0

9. Special Features	Code
CE Marked - Non-Impact Tested	P

The nomograph on the next page gives the relationships of valve size, flow, velocity, and pressure drop for various disc positions.

Size	C_v at Full-Open
2"	115
2 ½"	196
3"	302
4"	600
5"	1022
6"	1579
8"	3136
10"	5340
12"	8250
14"	11917
16"	16388
18"	21705
20"	27908
24"	43116
30"	73426

Sample Calculation, Liquid (see black line on chart)

Given:

Water (1.0 specific gravity) at 60°F is flowing through a 6-inch valve at a rate of 1000 gpm.

Find:

Line velocity (ft./sec.) and pressure drop when valve is in full-open (disc at 90°) position.

Solution:

From the 6-inch valve size at lower left of nomograph, go diagonally up to the intersecting horizontal line for 1000 gpm. From that point, proceed directly down to determine line velocity as 11 ft./sec.

For pressure drop, return to the 1000 gpm intersection and continue up vertically to "90° disc open" intersecting diagonal line. From this point, go horizontally to the left to determine pressure drop as 0.5 psi.

Sample Calculation, Gas (see gray line on chart)

Given:

Gas (0.8 lb/cu. ft. density) is flowing through an 8-inch valve at a rate of 1500 cu. ft./min.

Find:

Line velocity (ft./min.) and pressure drop when valve is in full-open (disc at 90°) position.

Solution:

From 8-inch valve size at lower left of nomograph, go diagonally up to the intersecting horizontal line for 1500 cu. ft./min. From that point, proceed directly down to the bottom line of the nomograph to determine line velocity as 4000 ft./min.

For pressure drop, return to the 1500 cu. ft./min. intersection and continue up vertically to "90° disc open" intersecting diagonal line. From this point, go horizontally to the left to determine pressure drop as 17 psi. Now, convert pressure drop to gas by dividing gas density by liquid density and multiplying by 17.

General Notes

1. Liquid flow data is based on pressure drop and flow rate with viscosity similar to water at 60°F using flow coefficient.

$$\frac{0.8}{62.34} \times 17.0 = 0.22 \text{ psi}$$

2. Velocities for liquids with densities similar to water should be less than 16 ft./sec.
3. Nomograph flow rate for gases is in cubic feet per minute (CFM) at flowing conditions. To convert flow rate from standard cubic feet per minute to CFM, use the following formula:
4. Gas density in lbs./cu. ft. equals:

$$\text{CFM} = \frac{(\text{SCFM} \times 14.7) \times (460 + °\text{F})}{(\text{line pressure, psia}) \times 520}$$

$$\frac{\left(\begin{array}{c}270 \times \\ \text{line pressure, psia}\end{array}\right) \times \left(\begin{array}{c}\text{specific gravity of} \\ \text{gas (relative to air)}\end{array}\right)}{460 + °\text{F}}$$

Definitions

C_v = Flow coefficient for valves; expresses flow rate in gallons per minute of 60°F water with 1.0 psi pressure drop across valve.

K = resistance coefficient.

K = $d\sqrt{\frac{29.9}{C_v}}$

P = weight density of fluid, in pounds per cubic foot.

d = internal diameter of Schedule 40 pipe, in inches.

Q = rate of flow, in gallons per minute.

ΔP = differential pressure, in pounds per square inch gauge.

Technical Data

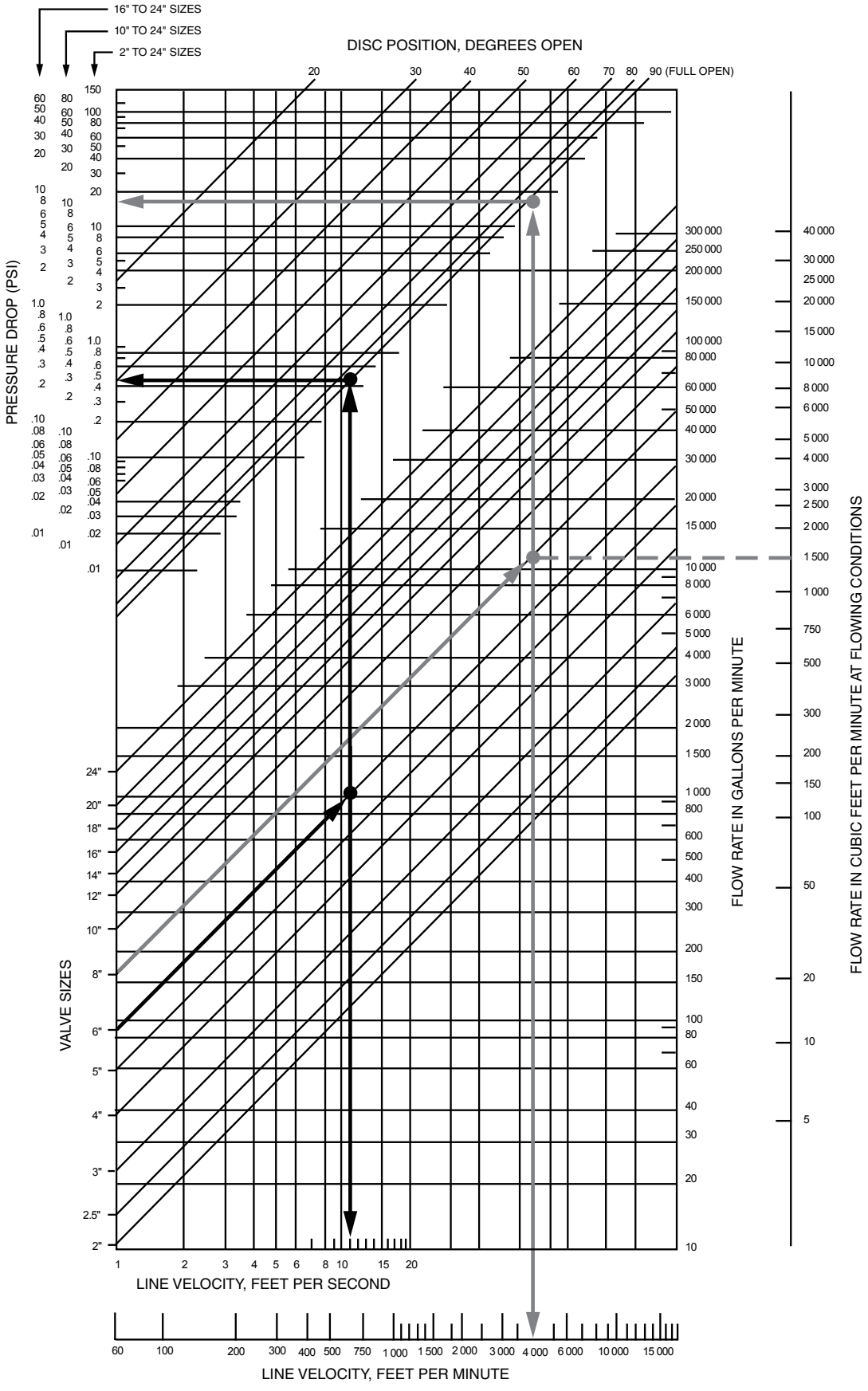

Seat Temperature Ratings and Application Information

Elastomer	Continuous Temp Range	Description
Buna-N	+10°F to 180°F	Also known as Nitrile or NBR. Buna-N is a good, general purpose material for most general services such as water at ambient temperatures, vacuum, compressed air, salt solutions, alkaline solutions and aliphatic h hydrocarbons (saturated and unsaturated). **Buna-N is not recommended for strong oxidizing agents, nitrated hydrocarbons, Ketones, acetates, phenols, aldehydes or for gasolines with additives. Also, Buna-N can swell in hot water applications, and increase operating torque.**
EPDM	-30°F to 275°F	EPDM is a synthetic rubber suitable for many general purpose applications with higher temperature requirements. It is acceptable for hot and chilled water, glycols, detergents, phosphate esters, Ketones and alcohols. **EPDM is not suitable for any hydrocarbon-based oils and lubricants, or in compressed air systems with hydrocarbons.**
Viton®	+10°F to 400°F	Viton® is a fluoroelastomer with exceptional resistance to oils and chemicals at higher temperatures. Viton® is suitable for hydrocarbons, and has a greater chemical resistance than Buna-N. Viton® can also be recommended for mineral acids, dilute and concentrated solutions and alcohols. **Viton® is not recommended for higher temperature water and steam applications as it has a tendency to swell. Also, Viton® hardens at the lower end of the temperature range, which can increase operation torque.**

Crane is please to offer other seat materials upon request. Please consult your sales representative or the factory for availability and application information.

CRANE Energy Flow Solutions®

CRANE Energy Global Headquarters
4526 Research Forest Drive, Suite 400
The Woodlands, Texas 77381 U.S.A.
Tel.: (1) 936-271-6500
Fax.: (1) 936-271-6510

Center Line Customer Service
9860 Johnson Road
Montgomery, Texas 77316
Tel.: (1) 936-588-8380
Fax.: (1) 936-588-8381

www.craneenergy.com

Energy Flow Solutions

Sydney, Australia, Operations
146–154 Dunheved Circuit
St. Mary's, N.S.W. 2760 Australia
Tel.: + 61 (2) 9623-0234
Fax.: + 61 (2) 9673-3870

Ningjin, China Operations
No. 8 Youyi Street Ningjin County
Hebei Province, China 055550
Tel: (86) 319-580-6651
Fax: (86) 319-580-8661

FLOW OF FLUIDS
www.flowoffluids.com

brands you trust.

ALOYCO® CENTER LINE® COMPAC-NOZ® CRANE® DUO-CHEK®
FLOWSEAL® SINCE 1864 JENKINS® FK® KROMBACH ARMATUREN be safe NOZ-CHEK® PACIFIC VALVES
STOCKHAM® Triangle® UNI-CHEK® NUCLEAR VALVE SERVICES

EG-CL-TB-EN-L16-05-1210

Crane Co., and its subsidiaries cannot accept responsibility for possible errors in catalogues, brochures, other printed materials, and website information. Crane Co. reserves the right to alter its products without notice, including products already on order provided that such alteration can be made without changes being necessary in specifications already agreed. All trademarks in this material are property of the Crane Co. or its subsidiaries. The Crane and Crane brands logotype (Aloyco®, Center Line®, Compac-Noz®, Crane®, Duo-Chek®, Flowseal®, Jenkins®, Krombach®, Noz-Chek®, Pacific Valves®, Stockham®, Triangle®, Uni-Chek®) are registered trademarks of Crane Co. All rights reserved.

© 2012 CRANE Energy Flow Solutions, www.craneenergy.com

IFC Series B125F and B150F Style 1
Iron and Bronze Flanged Basket Strainers

TAG:
20-SCN-600
C/W 20-DPS-600

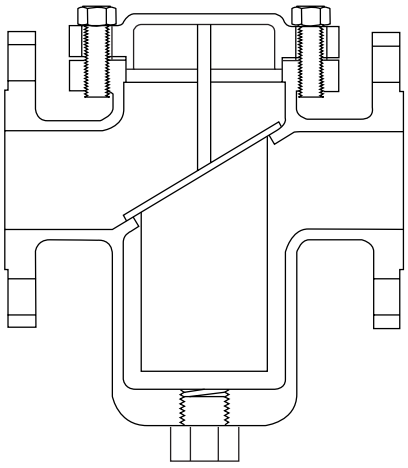

Design Features:

- Iron strainers are equipped with FF flanges (Series B125F) in accordance with ASME B16.1.
- Bronze strainers are equipped with FF flanges (Series B150F) in accordance with ASME B16.24.
- Strainer body meets applicable ASME/ANSI standard.
- All strainers equipped with bolted cover flanges that utilize a flat gasket seal.
- Strainer cover flanges are designed in accordance with ASME Section VIII, Div.1 Appendix II.
- Straight thru flow is accomplished by an angular basket design.
- Standard basket construction is 304 SS perforated plate.
- Recommended minimum straining level is 250 microns.
- N.P.T. drain connection furnished with plug.
- Recommended for installation in horizontal pipelines.

Notes: 1. See page 11 for details of available quick opening covers.
2. See page 19 for basket strainer effective areas.

Parts List and Standard Materials

Part IFC Model	Cast Iron B125FIB1	Bronze B150FBB1
Body	A126-B	B62
Cover	A126-B	B62
Screen [1]	304 SS	304 SS
Plug [2]	A126-B	B62
Gasket [1]	Bolted Cover: Graphite Quick Opening: See pg. 11	Bolted Cover: Teflon Quick Opening: See pg. 11
Bolt/Stud [2]	A307-B	Nonferrous
Nut [2]	A563	Nonferrous

Notes: 1. Recommended spares.
2. Materials of equivalent strength may be substituted at manufacturer's option.

Upper Pressure Limits (Non-Shock)

IFC Model	Body Material	M.A.W.P. psig (Bars)
B125FIB1 (Up to 12" size)	A126-B	200 (13.79)
B125FIB1 (Sizes 14" and up)	A126-B	150 (10.34)
B150FBB1	B62	225 (15.51)

Lower Temperature Limits

Body Material	Lower Limit °F (°C)
A126-B, B62	-20 (-28.9)

Pressure Temperature Chart (in accordance with ASME B16.1 & ASME B16.24)

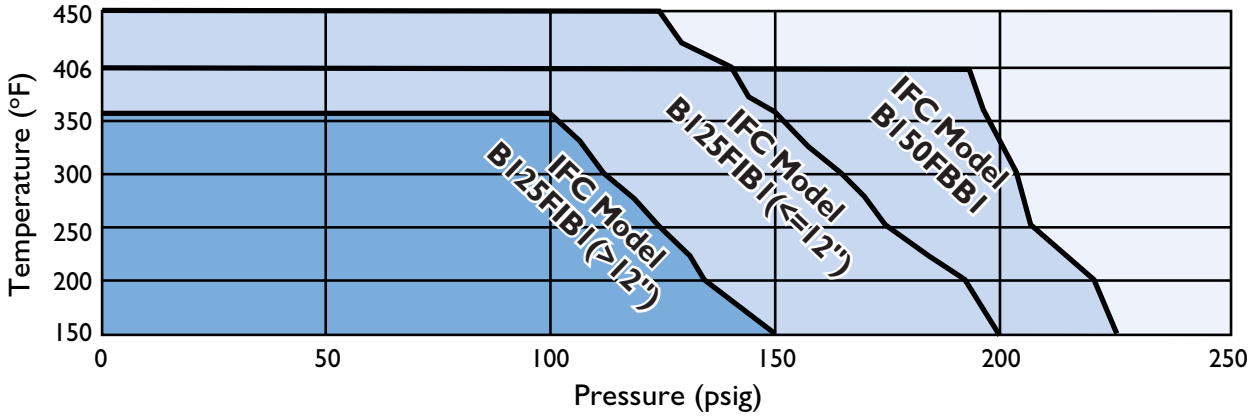

Note: Max. rating temperature for IFC model B150FBB1 limited by codes such as ASME B31.1, ASME B31.5, etc.

Tel. 905-335-8777 Fax. 905-335-0977 Toll Free Tel. 1-866-872-0072 Toll Free Fax. 1-866-872-0073

ISLIP FLOW CONTROLS Inc.

IFC Series B125F and B150F Style 1 Iron and Bronze Flanged Basket Strainers

Standard Screens	
Size range	**Opening**
2 - 3”	0.045 in.
50mm - 80mm	1.2 mm
4” - 20”	0.125 in.
100mm - 500mm	3.2 mm

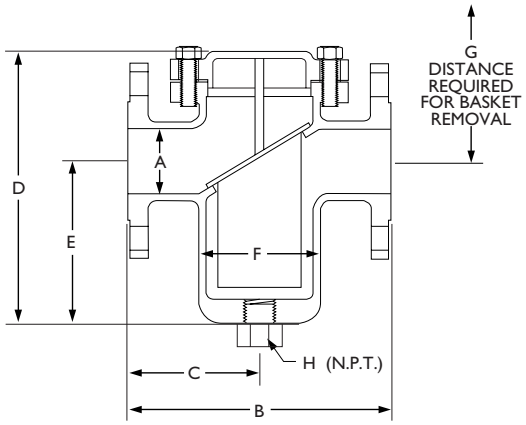

Dimensional Data (Class 125-150)

Size in (mm)	A in (mm)	B in (mm)	C in (mm)	D in (mm)	E in (mm)	F in (mm)	G in (mm)	H NPT in/mm B125FIB1	H NPT in/mm B150FBB1	Weight Lb./(Kg.) Cover	Weight Lb./(Kg.) Unit
2” 50	2.00 51	8.13 206	4.06 103	8.38 213	5.00 127	3.00 76	11.75 298	1/2 15	1 25	5 2.3	23 10
2 1/2” 65	2.50 64	8.25 210	4.13 105	9.75 248	6.25 159	4.00 102	13.25 337	3/4 20	1 25	7 3.2	33 15
3” 80	3.00 76	9.88 251	4.94 125	11.25 286	7.13 181	5.00 127	15.38 391	3/4 20	1 25	9 4.1	44 20
4” 100	4.00 102	11.50 292	5.75 146	12.88 327	8.00 203	6.00 152	17.75 451	1 25	1 25	13 5.9	67 30
5” 125	5.00 127	13.13 333	6.56 167	14.50 368	8.50 216	6.50 165	20.50 521	1 25	1 25	20 9.1	88 40
6” 150	6.00 152	14.88 378	7.44 189	16.00 406	9.00 229	8.00 203	23.00 584	1 25	1 25	26 12	120 54
8” 200	8.00 203	18.75 476	9.38 238	21.00 533	12.00 305	10.00 254	30.00 762	1 1/2 40	N/A	45 20	220 100
10” 250	10.00 254	20.00 508	10.00 254	24.75 629	14.00 356	12.50 318	35.50 902	1 1/2 40	N/A	70 32	353 160
12” 300	12.00 305	26.25 667	13.13 333	29.75 756	17.00 432	15.00 381	42.50 1080	1 1/2 40	N/A	110 50	523 237
14” 350	14.00 356	30.25 768	15.13 384	37.50 953	22.00 559	18.00 457	53.00 1346	1 1/2 40	N/A	140 64	815 370
16” 400	16.00 406	33.25 845	16.63 422	39.25 997	22.88 581	20.75 527	55.63 1413	1 1/2 40	N/A	180 82	1041 472
18” 450	18.00 457	38.50 978	19.25 489	40.00 1016	19.00 483	24.25 616	61.00 1549	2 50	N/A	220 100	1446 656
20” 500	20.00 508	41.38 1051	20.69 525	46.25 1175	23.25 591	26.50 673	69.25 1759	2 50	N/A	285 129	1980 898

Notes: 1. Vents are optional.
2. Dimension “B” is +/- 0.13”.
3. Dimension “D” will change when Quick Opening covers are used.
4. Sizes 8” and larger come complete with a side drain as standard. A bottom drain is optional.

General

1. Quick opening cover features are shown on pages 11-12.
2. See pg. 14 for available perforations and screen materials.
3. Pressure drop information is shown on pg. 15.
4. See pg. 22 for ordering information.
5. Dimensions shown are subject to change. Consult factory for certified prints when required.

GF Piping Systems

+GF+

TAGS:
23-CV-130
23-CV-330

Cone Check Valves
Type 561/562



General

- **Size**: ⅜"–4"
- **Material**: PVC, CPVC, PROGEF® Standard PP, ABS, SYGEF® Standard PVDF
- **Seals**: EPDM, FPM
- **Spring:** 304 stainless steel
- **End Connection**: Solvent cement socket, threaded, flanged, fusion spigot, fusion socket

Key Certifications

- **FDA CFR 21 177.1520**: PP
- **FDA CFR 21 177.2600**: EPDM and FPM
- **FDA CFR 21 177.1550**: PTFE
- **USP 25 Class VI (physiological non-toxic)**: PP

Optional Features

- **Strainer**: Foot valve applications, PVC only
- **Spring**: Nimonic 90, Halar coated Nimonic 90
- **End Connection**: Alternatives available upon request
- **Cleaned**: Silicone free/oil free

Specification

The Type 561/562 Cone Check Valve shall be true union and fully serviceable. The Type 561 shall be used in vertical applications only. The Type 562 shall be used in both horizontal and vertical applications. The cone shall be stabilized by a guide rod. The carrier shall be adjustable and reverse threaded. The valve nut threads shall be of buttress type. All elastomeric seals shall be of like material. ANSI flanged versions shall meet ANSI B16.5 150lb standards. All valves shall be tested in accordance to ISO9393 and designed to ISO16136 standards. All valves shall be manufactured under ISO9001 for Quality and ISO14001 for Environmental Management. Following assembly, every valve shall be tested and certified bubble tight exceeding Class VI standards. PVC valves shall meet ASTM D1784 cell classification 12454 standards. CPVC valves shall meet ASTM D1784 cell classification 23447-B standards. PP valves shall meet ASTM D5847-14 cell classification PP0510B66851 standards. ABS valves shall meet ASTM D3965 cell classification 42222 standards. PVDF valves shall be type 1, grade 2 according to ASTM D3222 standards. Valves of all materials shall be RoHS compliant.

Components

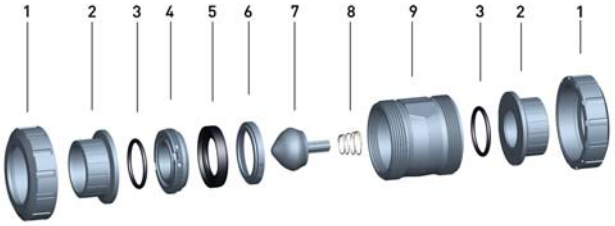

Valve Components

Part	Description	Material
1	Valve nut	PVC, CPVC, PP, ABS or PVDF
2	Valve end	PVC, CPVC, PP, PPn, ABS, PE or PVDF
3	Face seal	EPDM or FPM
4	Carrier	PVC, CPVC, PP, ABS or PVDF
5	Cone seal	EPDM or FPM
6	Backup ring	PVC, CPVC, PP, ABS or PVDF
7	Cone	PVC, CPVC, PP-TV20, ABS or PVDF
8	Spring	304 Stainless steel
9	Valve body	PVC, CPVC, PP, ABS or PVDF

Key Design Features

The Type 561/562 Cone Check Valves are designed to optimize the flow path through the valve. The streamlined cone decreases resistance and significantly improves Cv when compared to traditional ball check valves. The internal geometry of the valve body features smooth transitions and radii, the contour is designed to direct media around the cone in order decrease pressure loss.

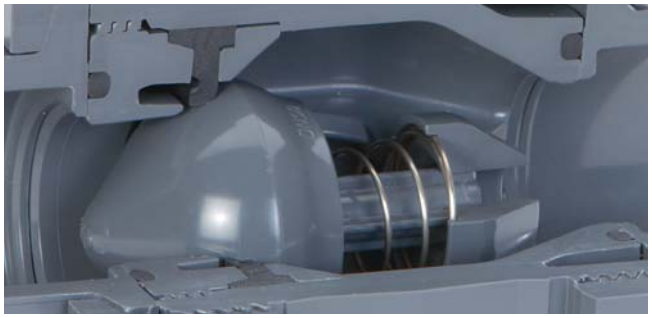

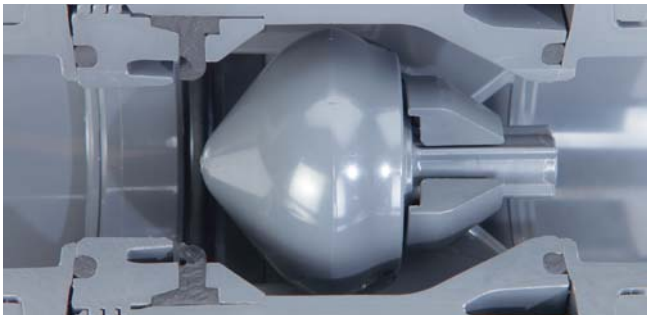

The Type 562 Cone Check Valves are designed for both vertical and horizontal applications. A spring is seated between the cone and the guide to allow the valve to properly seal in applications where a traditional ball check valve would not.

The cone is stabilized by a guide rod, which maintains a cone's position at full stroke, preventing rattling and decreasing the potential for damage.

Technical Data

System Conditions

The following information is based on water applications at 68° F

Size (inch)	d (mm)	561 Cracking (psi)	562 Cracking (psi)	561 Sealing (psi)	562 Sealing (psi)	Full Stroke (gpm)
⅜	16	0.04	0.41	2.9	1.45	2.11
½	20	0.04	0.41	2.9	1.45	2.38
¾	25	0.04	0.44	2.9	1.45	3.43
1	32	0.07	0.44	2.9	1.45	4.76
1¼	40	0.07	0.51	2.9	1.45	9.25
1½	50	0.15	0.58	2.9	1.45	18.49
2	63	0.29	0.73	2.9	1.45	26.42
2½	75	0.36	0.87	2.9	1.45	31.70
3	90	0.44	0.87	2.9	1.45	44.91
4	110	0.44	0.87	2.9	1.45	66.05

Cracking pressure is amount of pressure on the inlet side of the valve required to unseat a closed valve and allow media to begin to pass through the valve. Sealing pressure is the amount of pressure on the outlet side of the valve required to seat an open valve and seal it so no media can pass through. The full stroke flowrate is the volume of media required to maintain the ideal position of the cone in order to optimize the valve's performance.

Cone Density

Material	Density (g/cm³)
PVC	1.38
CPVC	1.50
PP-TV20 (PPh with 20% Talc)	1.05
ABS	1.03
PVDF	1.78

It is not recommended to use Type 561/562 Cone Check Valves in applications in which the media is of greater density than the cone. This will cause the cone to float, thus interfering with the valve's ability to seal properly. PP-TV20 cone used in PP valves.

Pressure Temperature Curves

The following graphs are based on a 25 year lifetime water or similar media application

PVC

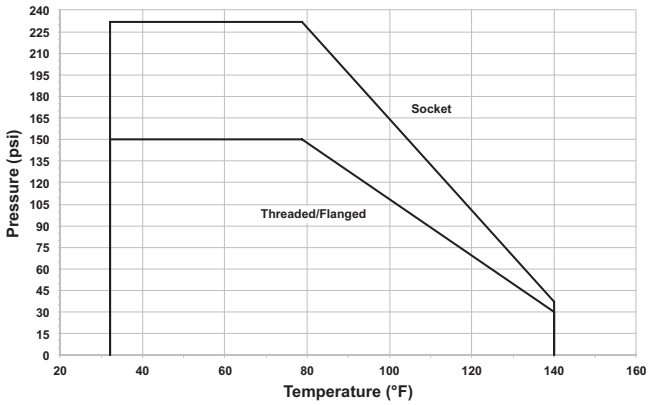

CPVC

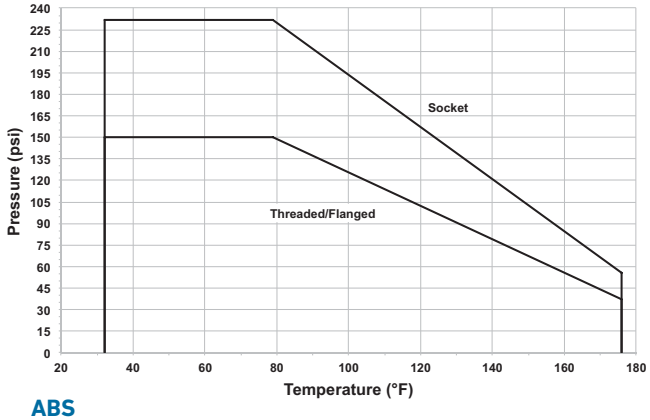

PP

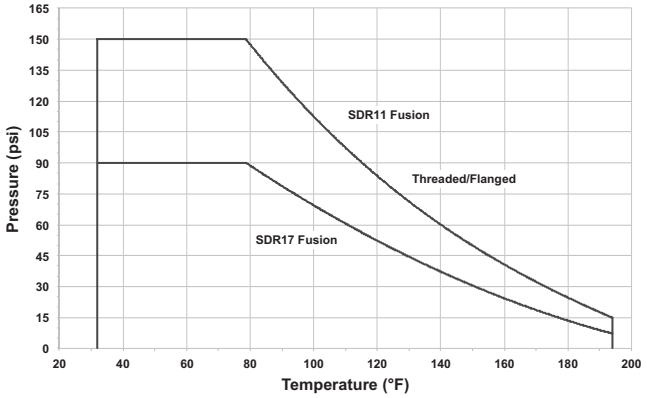

ABS

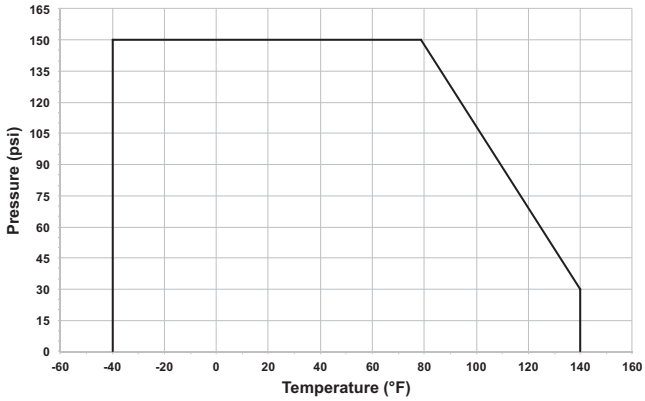

PVDF

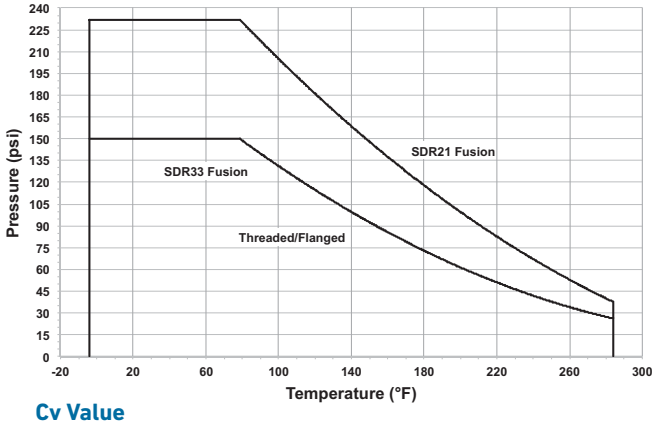

Pressure-Temperature

Material	Temperature Range (°F)	Max Pressure (psi)
PVC	32 to 140	232
CPVC	32 to 176	232
PP	32 to 176	150
ABS	-40 to 140	150
PVDF	-4 to 284	232

Cv Value

Size (inch)	d (mm)	Cv (gal/min)
⅜	16	13
½	20	13
¾	25	26
1	32	32
1¼	40	59
1½	50	75
2	63	115
2½	75	204
3	90	248
4	110	286

Pressure Loss

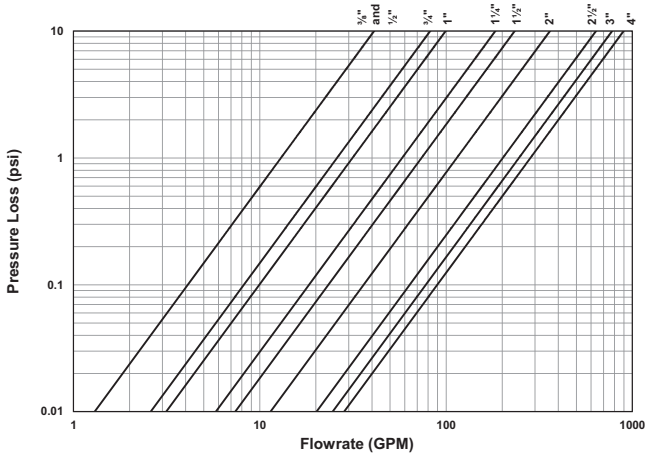

Dimensions

The following tables are shown in inches unless otherwise specified

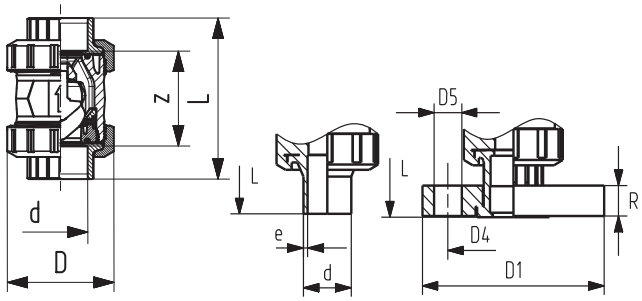

All Materials

PVC/CPVC

Size	d (mm)	D	Size	Socket L	Socket z	Threaded L	Threaded z	Flanged L	Flanged D1	Flanged D4	Flanged D5	Flanged R
⅜	16	1.97	⅜	4.13	2.64	3.86	2.72	-	-	-	-	-
½	20	1.97	½	4.13	2.4	3.86	2.56	5.87	3.5	2.38	0.5	0.57
¾	25	2.28	¾	4.76	2.76	4.37	2.92	6.5	3.88	2.75	0.5	0.58
1	32	2.68	1	5.24	2.99	5	3.23	7.24	4.25	3.13	0.5	0.66
1¼	40	3.31	1¼	6.06	3.54	5.79	3.85	8.11	4.63	3.5	0.5	0.69
1½	50	3.82	1½	6.46	3.7	6.18	4.33	8.7	5	3.88	0.5	0.76
2	63	4.88	2	7.2	4.21	7.2	5.31	9.88	6	4.75	0.63	0.82
2½	75	6.54	2½	9.17	5.67	9.21	6.54	12.24	7	5.5	0.63	0.98
3	90	7.87	3	10	5.94	10.04	6.88	13.5	7.5	6	0.63	1.02
4	110	9.37	4	11.85	6.85	11.89	8.42	15.63	9	7.5	0.63	1.11

PP

d (mm)	Socket L	Socket z	IR/Butt L	IR/Butt e	Threaded L	Threaded z	Flanged L	Flanged D1	Flanged D4	Flanged D5	Flanged R
16	3.66	2.64	-	-	3.78	2.8	-	-	-	-	-
20	3.74	2.6	5.12	0.07	3.9	2.52	6.54	3.74	2.36	0.63	0.63
25	4.29	3.03	5.63	0.09	4.37	2.99	6.97	4.13	2.76	0.63	0.67
32	4.69	3.27	5.91	0.12	5	3.27	7.52	4.53	3.11	0.63	0.71
40	5.31	3.9	6.73	0.15	5.75	3.94	8.23	5.51	3.5	0.63	0.79
50	5.79	4.13	7.52	0.18	6.18	4.37	9.02	5.91	3.86	0.63	0.87
63	6.61	4.61	8.66	0.23	7.2	5.28	9.96	6.5	4.76	0.75	0.94
75	9.17	6.57	10.47	0.32	-	-	16.38	7.28	5.51	0.75	1.02
90	10	7.09	10.39	0.39	-	-	16.3	7.87	5.98	0.75	1.06
110	11.85	8.46	11.85	0.47	-	-	17.76	9.02	7.48	0.75	1.1

ABS

d (mm)	Socket L	Socket z
16	3.62	2.52
20	3.74	2.52
25	4.33	2.83
32	4.84	3.11
40	5.57	3.7
50	6.18	3.74
63	7.2	4.21
75	9.17	5.67
90	10	5.94
110	11.85	6.85

PVDF

d (mm)	Socket L	Socket z	IR/Butt L	IR/Butt e	Threaded L	Threaded z	Flanged L	Flanged D1	Flanged D4	Flanged D5	Flanged R
16	3.66	2.64	-	-	3.78	2.72	-	-	-	-	-
20	3.74	2.6	5.12	0.07	3.9	2.52	6.85	3.74	2.36	0.63	0.63
25	4.29	3.03	5.63	0.07	4.37	2.99	7.44	4.13	2.76	0.63	0.67
32	4.69	3.27	5.91	0.09	5	3.27	7.83	4.53	3.11	0.63	0.71
40	5.31	3.9	6.73	0.09	5.75	3.98	9.25	5.51	3.5	0.63	0.79
50	5.79	4.13	7.52	0.12	6.18	4.37	9.57	5.91	3.86	0.63	0.87
63	6.61	4.61	8.66	0.12	7.2	5.31	10.28	6.5	4.76	0.75	0.94
75	9.17	6.57	10.47	0.14	-	-	16.77	7.28	5.51	0.75	1.02
90	10	7.09	10.39	0.17	-	-	16.77	7.87	5.98	0.75	1.06
110	11.85	8.46	11.85	0.21	-	-	19.17	9.02	7.48	0.75	1.1

GF Piping Systems
Tel. (714) 731-8800, Toll Free (800) 854-4090, Fax (714) 731-6201
us.ps@georgfischer.com, www.gfpiping.com

+GF+

#1334-39 (2/15)

© 2015 Georg Fischer LLC
Printed in USA

Tag: 20-HV-501-1/2/3/4
16-HV-705

MODEL **ET** **SERIES 20**

ORBINOX
VALVE SOLUTIONS IN MORE THAN 70 COUNTRIES

HEAVY DUTY KNIFE GATE VALVE

The ET(SER.20) model knife gate is an uni-directional lug type valve designed according to MSS-SP-81 and TAPPI TIS 405-8 for industrial service applications. The design of the body and seat assures non-clogging shut off on suspended solids in industries such as:

- Pulp and Paper
- Power plants
- Mining
- Chemical plants
- Wastewater treatment plants
- Food and Beverage
- Etc.

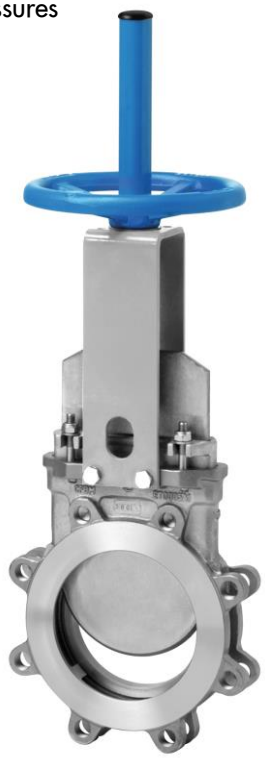

Sizes:

DN 2"/50mm to DN 36"/900mm (larger diameters on request)

Working pressure:

DN 2"/ 50mm to DN 24"/600mm	150 psi /(10 kg/cm²)
DN 30"/750mm	100 psi / (7 kg/cm²)
DN 36"/900mm	100 psi / (7 kg/cm²)

Standard flange connection:

DIN PN 10 and ANSI B16.5 (class 150)

Other flange connections available on request

Directives:

For EU Directives and other Certificates, please see the document: Directives and Certificates Compliance - Knife Gate Valves - Catalogues and Datasheets

All valves are tested prior to shipping in accordance with the standard developed by the Quality Control Department at ORBINOX.

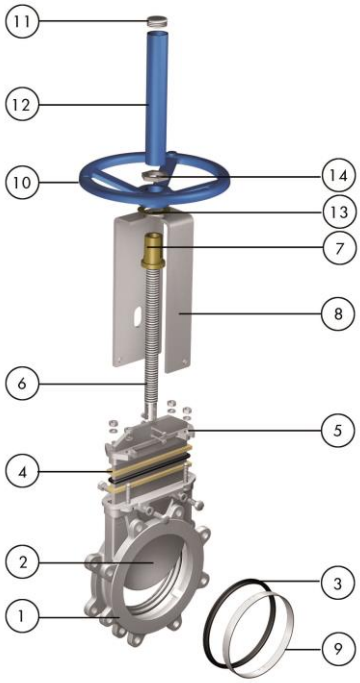

STANDARD PARTS LIST

Part:	Stainless Steel:
1- Body	CF8M
2- Gate	AISI 316
3- Seat	Metal or EPDM
4- Packing	PTFE Impreg. Synth. Fibre with an EPDM O-Ring
5- Gland Follower	CF8M
6- Stem	Stainless Steel
7- Stem nut	Brass
8- Yoke	AISI 304 / Epoxy-coated Carbon Steel
9- Seat Retainer Ring	AISI 316
10- Handwheel	GJS400 (GGG40)
11- Cap	Plastic
12- Stem Protector	Epoxy-coated Carbon Steel
13- Friction Washer	Brass
14- Nut	Zinc Plated Carbon Steel

MODEL ET SERIES 20

ORBINOX
VALVE SOLUTIONS IN MORE THAN 70 COUNTRIES

DESIGN FEATURES

BODY:

Lug type one piece integrally cast stainless steel body with reinforced ribs in larger diameters for extra body strength. Internal cast gate wedges and guides allows for tighter shutoff. Port design follows the MSS-SP-81 and Tappi TIS 405-8 standards.
The internal design of the valve avoids any build up of solids that would prevent the valve from closing.

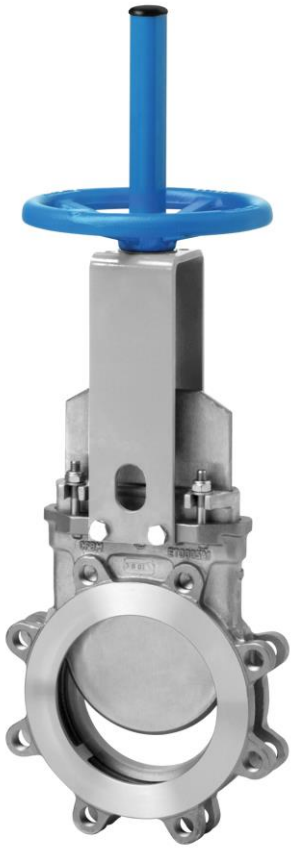

GATE:

Standard AISI 316 stainless steel gate.
The gates are polished and lapped to attain a greater seal between the gate and both the packing and the seat. The bottom of the gate edge is also machined to a bevel, so that it cuts through the solids for a tighter seal in the closed position.

SEAT: (resilient)

Unique design that mechanically locks the seal in the internal of the valve body with a stainless steel retainer ring. Standard EPDM also available in different materials such as Viton, PTFE, etc.

PACKING:

Long-life packing with several layers of PTFE impregnated fibre plus an EPDM O-ring, with an easy access packing gland ensuring a tight seal. Long-life braided packing is available in a wide range of materials.

STEM:

The standard stainless steel stem offers a long corrosion resistant life. For rising stem actuators only, a stem protector is provided for additional protection against dust while the valve in the open position.

ACTUATORS:

All actuators supplied by ORBINOX are interchangeable, and supplied with a standard mounting kit for installation purposes on site.

YOKE or ACTUATOR SUPPORT:

Made of stainless steel (EPOXY coated carbon steel available on request). Compact design makes it extremely robust even under the most severe conditions.

EPOXY COATING:

The epoxy coating on all ORBINOX cast iron and carbon steel valve bodies and components is electrostatically applied making the valves to be corrosion resistant with a high quality finished surface. The ORBINOX standard colour is RAL-5015 blue.

GATE SAFETY PROTECTION:

ORBINOX automated valves are provided with gate guards in accordance with EU Safety Standards. The design feature prevents any objects from being caught accidentally while the gate is moving.
*ONLY IN EUROPE

ORBINOX
VALVE SOLUTIONS IN MORE THAN 70 COUNTRIES

OTHER OPTIONS

Bonnet (Fig.1):

Assures tight seal to atmosphere.
Reduces packing maintenance.

V-port:

60 degree and pentagonal port design. Selection depends on the desired fluid control type.

Flush ports (Fig.2):

Allow for cleaning of solids trapped within the body cavities that can obstruct the flow or prevent the valve from closing. Depending on the process, purging can be made with air, steam, liquids, etc.

Other materials of construction:

Special alloys such as AISI 317 (1.4449), 254SMO (1.4544), Hastelloys, …

Fabricated valves:

ORBINOX designs, produces and delivers special fabricated valves for special process conditions (big sizes and/or high pressures).

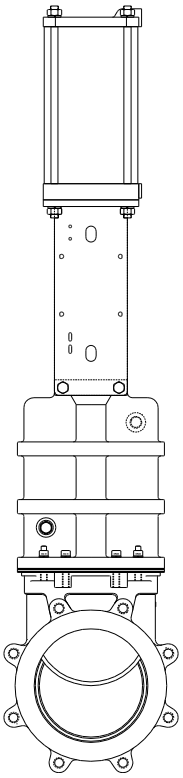

Fig.1

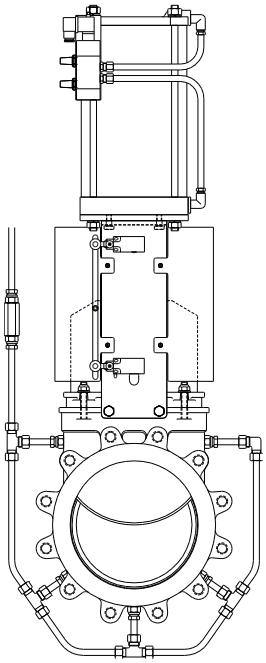

Fig.2

SURFACE TREATMENTS

Valve components can be protected or coated for a longer life expectancy, depending on the application of the valves and the valve service conditions. At ORBINOX we can offer alternative treatments and coatings for the different valve components to improve their properties against abrasion (Stellite, polyurethane…), against corrosion (Halar, Rilsan, galvanizing…) and against adherence (polishing, PTFE…).

We recommend to contact our technical department.

MODEL ET SERIES 20

ORBINOX
VALVE SOLUTIONS IN MORE THAN 70 COUNTRIES

ACTUATOR TYPES

MANUAL:
Handwheel (rising stem)
Handwheel (non-rising stem)
Chainwheel
Lever
Bevel Gear
Other (square nut)

AUTOMATIC:
Electric (rising & non-rising stem)
Pneumatic (single & double-acting)
Hydraulic

All actuators supplied by ORBINOX are interchangeable.

FAIL SAFE SYSTEMS

Used on pneumatic actuated valves

SINGLE ACTING (SPRING RETURN)

- Available from DN 2"/50mm to DN 12"/300mm
- Supply pressure:
  - min. 75 psi/ (5 kg/cm²)
  - max. 150 psi/ (10 kg/cm²)
- Options:
  - Pneumatic or electric fail open
  - Pneumatic or electric fail close
  - Other options on request

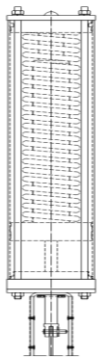

DOUBLE ACTING WITH AIR TANK

- Available for all valve sizes
- Supply pressure:
  - min. 50 psi / (3.5 kg/cm²)
  - max. 150 psi / (10 kg/cm²)
- Options:
  - Pneumatic or electric fail open
  - Pneumatic or electric fail close
  - Other options on request

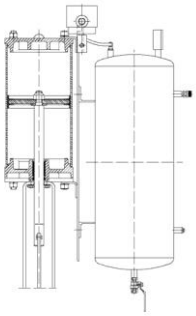

ACCESSORIES

Mechanical stops
Locking device
Manual override
Solenoid valves
Positioners
Limit switches
Proximity switches
Floor stands
Stem extensions

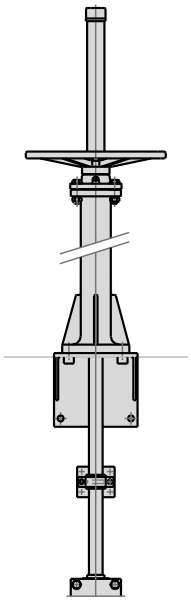

Wide range of valve extensions available

For further information about fail safe systems and valve extensions, please see EX(SER.10) catalog.

We recommend to contact with our technical department.

MODEL ET SERIES 20

ORBINOX
VALVE SOLUTIONS IN MORE THAN 70 COUNTRIES

TEMPERATURE CHART

SEAT / SEALS

Material	Max.T.(Fº)	(ºC)	Applications
Metal/Metal	>482	>250	High temp. Low tightness.
EPDM (E)	248	120	Acids and non mineral oils.
NBR (N)	248	120	Resistance to petroleum products.
FKM-FPM (V)	392	200	Chemical service./High temp.
VMQ (S)	482	250	Food service. / High temp.
PTFE (T)	482	250	Corrosion resistance.

More details and other materials under request

PACKING

Material	Max.T. (Fº)	(ºC)	pH
PTFE impregn. synth. fibre (ST)	482	250	2-13
Braided PTFE (TH)	500	260	0-14
Graphited (GR)	1112	600	0-14
Ceramic fibre (FC)	2192	1200	--

NOTE: all types include an elastomere O-ring (same material as seal), excluding TH, GR and FC.

SEAT TYPES

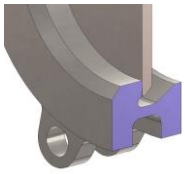

METAL / METAL
For applications with:
- High temperature
- High density media application
- When full tightness is not required

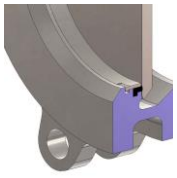

RESILIENT, TYPE "A"
- Standard resilient seat.
- Temperature limitations according to seat material selected. Review the above chart or contact our technical department for more information.
- Replaceable seat retainer ring.

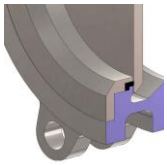

RESILIENT, TYPE "B"
- Temperature limitations according to the selected seat material. Review the above chart or contact our Technical Department for more information.
- Replaceable and reinforced seat ring available in different materials such as: AISI 316 (1.4401), CA15, Ni Hard, etc.

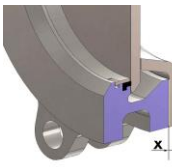

DEFLECTION CONE "C"
- Deflects the media away from any valve internal exposed parts (gate, seat,...)
- Material: AISI 316 (1.4401), CA15, Ni-Hard, PU, etc.
- Face-to-face dimension increases:
DN 2"/50mm to DN 10"250mm X = 0.35"/9mm
DN 12"/300mm to DN 24"/600mm X = 0.47"/12mm
Larger diameters on request

MODEL ET SERIES 20

ORBINOX
VALVE SOLUTIONS IN MORE THAN 70 COUNTRIES

HANDWHEEL (rising stem)

- Standard handwheel actuator.
- Consists of:
  - Handwheel: Epoxy coated Cast Iron
  - Yoke
  - Stem
  - Stem nut
  - Stem protector
- Available from DN 2"/50mm to DN 24"/600mm
- Options (on request):
  - Chainwheel
  - Non-rising stem
  - Locking Device
  - Extensions

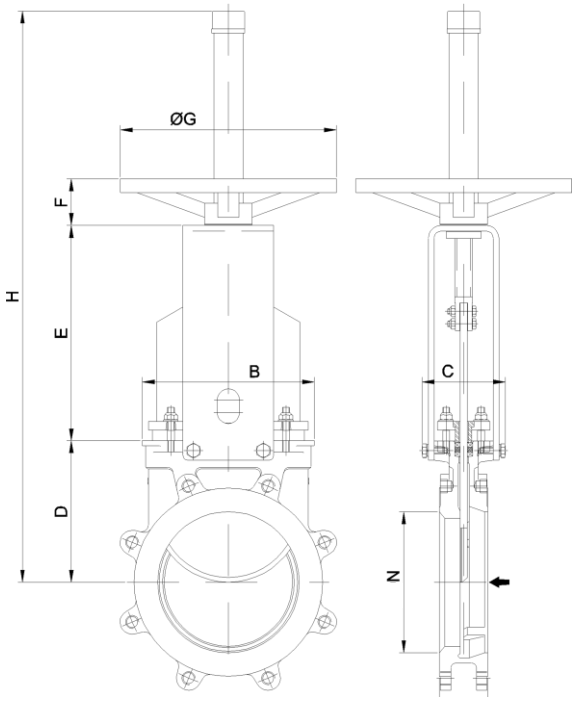

DN("/mm)	N	A	B	C	D	E	F	ØG	H	Weight (lbs/kg.)
2"/50	1,96/50	1,89/48	4,88/124	4/100	3,85/98	5,35/139	1,85/47	8,86/225	16,53/420	18/8
3"/80	3,14/80	2/51	5,87/149	4/100	4,68/119	6,38/162	1,85/47	8,86/225	18,50/470	22/10
4"/100	3,81/97	2/51	6,65/169	4/100	5,47/139	7,36/187	1,85/47	8,86/225	20,43/519	28/12,5
5"/125	4,6/117	2,24/57	6,65/169	4/100	5,90/150	8,78/223	1,85/47	8,86/225	24,13/613	35/16
6"/150	5,51/140	2,24/57	7,75/197	4/100	6,50/165	9,33/237	1,85/47	8,86/225	25,27/642	44/20
8"/200	7,24/184	2,75/70	9,72/247	4,80/122	7,99/203	12,16/309	2,64/67	12,20/310	32,28/820	70/32
10"/250	9,05/230	2,75/70	11,73/298	4,80/122	9,17/233	13,58/345	2,64/67	12,20/310	38,81/986	103/47
12"/300	10,82/275	2,99/76	13,74/349	4,80/122	10,74/273	15,35/390	2,72/69	16,14/410	42,16/1071	143/65
14"/350	12/305	2,99/76	15,39/391	7,60/193	12,28/312	17,04/433	2,60/66	16,14/410	49,01/1245	209/95
16"/400	13,84/351,6	3,50/89	17,28/439	7,60/193	13,66/347	18,81/478	2,60/66	16,14/410	52,16/1325	268/122
18"/450	15,35/390	3,50/89	19,01/483	7,75/197	16,33/415	21,73/552	2,64/67	21,65/550	59,49/1510	352/160
20"/500	17,12/435	4,49/114	21,33/542	7,75/197	17,71/450	24,05/611	2,64/67	21,65/550	63,66/1617	444/202
24"/600	20,55/522	4,49/114	25,08/637	7,75/197	19,72/501	27,44/697	2,64/67	21,65/550	74,13/1883	638/290

Reserves the right to change specifications without notice

MODEL ET SERIES 20

ORBINOX
VALVE SOLUTIONS IN MORE THAN 70 COUNTRIES

GEAR

- Recommended for valves larger than DN14"/350mm and working pressures greater than 50 psi/(3.5 kg/cm²)

- Consists of:
  - Stem
  - Yoke
  - Bevel Gear Actuator with Handwheel (Standard Ratio 4:1)

- Available from DN 8"/200mm to DN 36"/900mm

- Options:
  - Chainwheel
  - Non-rising Stem
  - Locking Device
  - Extensions

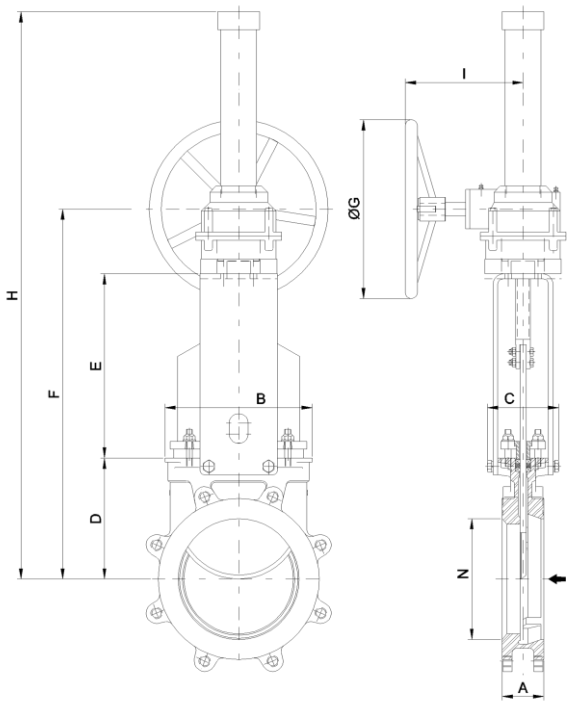

DN("/mm)	N	A	B	C	D	E	F	ØG	H	I
8"/200	7,24/184	2,75/70	9,72/247	4,80/122	7,99/203	12,16/309	22,91/582	12/300	39,05/992	7,87/200
10"/250	9,05/230	2,75/70	11,73/298	4,80/122	9,17/233	13,58/345	25,51/648	12/300	41,73/1060	7,87/200
12"/300	10,82/275	2,99/76	13,74/349	4,80/122	10,74/273	15,35/390	28,85/733	12/300	45/1143	7,87/200
14"/350	12/305	2,99/76	15,39/391	7,75/197	12,28/312	16,93/430	31,10/790	18/450	58,62/1489	10,63/270
16"/400	13,84/351,6	3,50/89	17,28/439	7,75/197	13,66/347	18,70/475	34,25/870	18/450	61,81/1570	10,63/270
18"/450	15,35/390	3,50/89	19,01/483	7,91/201	16,33/415	20,39/518	38,74/984	18/450	63,58/1615	10,63/270
20"/500	17,12/435	4,49/114	21,33/542	7,91/201	17,71/450	21,97/558	42,99/1092	18/450	71,25/1810	11,02/280
24"/600	20,55/522	4,49/114	25,08/637	7,91/201	19,72/501	26,10/663	49,13/1248	26/650	73,98/1879	11,41/290
30"/750	26,37/670	4,60/117	33,15/842	12,60/320	24,57/624	34,29/871	62,87/1597	26/650	104,33/2650	16,26/413
36"/900	31,88/810	4,60/117	38,19/970	12,60/320	30,67/779	41,18/1046	84,05/2135	26/650	123,42/3135	17,40/442

MODEL ET SERIES 20

ORBINOX
VALVE SOLUTIONS IN MORE THAN 70 COUNTRIES

PNEUMATIC CYLINDER

- The standard pneumatic actuator (double acting on-off cylinder) consists of:
  - Ø ≤ 12"/300mm: Aluminum barrels
  - Ø ≥ 14"/350mm: Composite barrels
  - Aluminum end covers
  - Stainless Steel (AISI 304) piston rod
  - Nitrile coated steel piston
- Available from DN 2"/50mm to DN 36"/900mm
- Supply Pressure: min. 50 psi/(3.5 kg/cm²) - max. 145 psi/(10 kg/cm²)
  Actuator designed with 85psi/(6 kg/cm²) air supply
- For valves installed in a horizontal position, we recommend U-type support plates and/or actuator support.
- Options:
  - Hard anodized barrel and covers
  - Stainless Steel barrel and covers
  - Over / Undersized cylinder
  - Manual override
  - Fail safe systems
  - Travel stops
- Instrumentation (on request):
  - Positioners
  - Flow regulators
  - Solenoid valves
  - Air preparation units

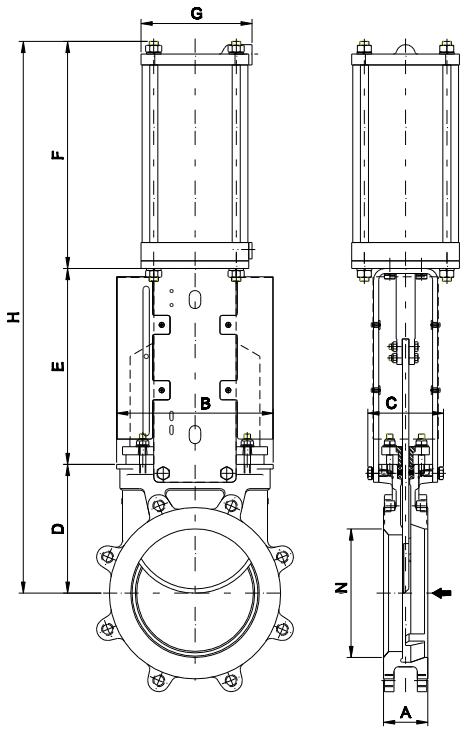

DN(“/mm)	N	A	B	C	D	E	F	G	H	Weight (lbs./kg.)	Standard Cyl.	Connect.
2”/50	1,96/50	1,89/48	4,88/124	4/100	3,85/98	5,35/139	7,00/178	4,53/115	16,22/412	22/10	C4”-2.44”/(100-62)	¼” G
3”/80	3,14/80	2/51	5,87/149	4/100	4,68/119	6,38/162	8,30/211	4,53/115	19,37/492	26/12	C4”-3.74”/(100-95)	¼” G
4”/100	3,81/97	2/51	6,65/169	4/100	5,47/139	7,36/187	9,09/231	4,53/115	21,93/557	33/15	C4”-4.52”/(100-115)	¼” G
5”/125	4,6/117	2,24/57	6,65/169	4/100	5,90/150	8,78/223	10,66/271	5,51/140	25,35/644	46/21	C5”-5.52”/(125-143)	¼” G
6”/150	5,51/140	2,24/57	7,75/197	4/100	6,50/165	9,33/237	11,65/296	5,51/140	27,48/698	59/27	C5”-6.61”/(125-168)	¼” G
8”/200	7,24/184	2,75/70	9,72/247	4,80/122	7,99/203	12,16/309	14,09/358	6,89/175	34,25/870	101/46	C6.30”-8.66”/(160-220)	¼” G
10”/250	9,05/230	2,75/70	11,73/298	4,80/122	9,17/233	13,58/345	16,85/428	8,66/220	39,60/1006	154/70	C8”-10.62”/(200-270)	3/8” G
12”/300	10,82/275	2,99/76	13,74/349	4,80/122	10,74/273	15,35/390	18,81/478	8,66/220	44,93/1141	195/89	C8”-12.60”/(200-320)	3/8” G
14”/350	12/305	2,99/76	15,39/391	7,60/193	12,28/312	18,07/459	21,61/549	10,90/277	51,96/1320	297/135	C10”-14.76”/(250-375)	3/8” G
16”/400	13,84/351,6	3,50/89	17,28/439	7,60/193	13,66/347	18,81/478	23,58/599	10,90/277	56,06/1424	356/162	C10”-16.78”/(250-425)	3/8” G
18”/450	15,35/390	3,50/89	19,01/483	7,75/197	16,33/415	21,73/552	26,77/680	15,03/382	64,84/1647	466/212	C12”-18.70”/(300-475)	½” G
20”/500	17,12/435	4,49/114	21,33/542	7,75/197	17,71/450	24,05/611	28,74/730	15,03/382	70,51/1791	638/290	C12”-20.67”/(300-525)	½” G
24”/600	20,55/522	4,49/114	25,08/637	7,75/197	19,72/501	27,44/697	32,68/830	15,03/382	79,84/2028	825/375	C12”-24.60”/(300-625)	½” G
30”/750	26,37/670	4,60/117	33,15/842	12,60/320	24,57/624	37,00/940	38,77/985	17,48/444	100,35/2549	1419/645	C14”-30.70”/(350-780)	¾” G
36”/900	31,88/810	4,60/117	38,19/970	12,60/320	30,51/775	43,30/1100	47,32/1202	20,27/515	121,14/3077	1716/780	C16”-36.61”/(400-930)	¾” G

MODEL ET SERIES 20

ORBINOX
VALVE SOLUTIONS IN MORE THAN 70 COUNTRIES

ELECTRIC ACTUATOR

- Consists of:
  - Electric actuator
  - Rising stem
  - Motor support yoke flange acc. to ISO 5210 / DIN 3338

- The standard electric motor is equiped with:
  - Manual emergency operation
  - Limit switches (open/closed)
  - Torque switches

- Available from DN 2"/50mm to DN 48"/1200mm

- Wide range of types and marks available to meet customer's needs.

- Option:
  - Non rising stem

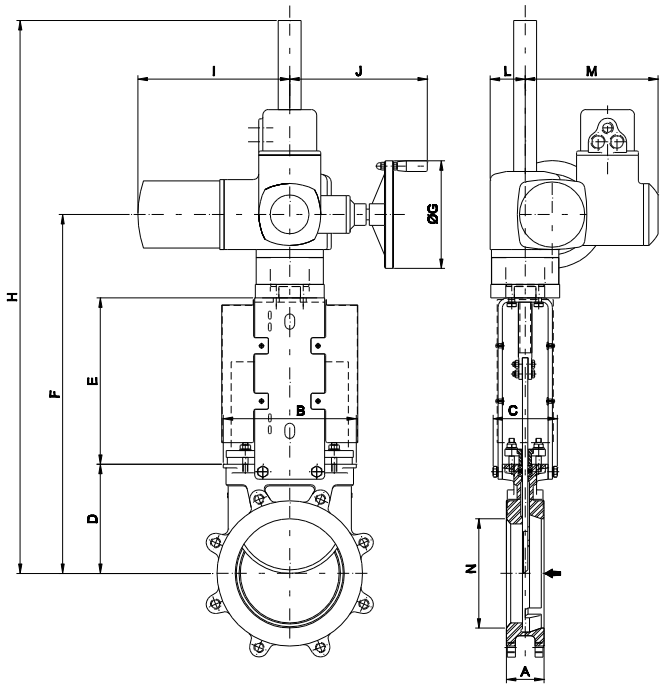

DN(“/mm)	N	A	B	C	D	E	F	ØG	H	I	J	L	M	Stem Ø x pich	Torque (ft.LBS/Nm)
2”/50	1,96/50	1,89/48	4,88/124	4/100	3,86/98	5,35/136	14,84/377	6,30/160	17,87/454	10,43/265	9,80/249	2,44/62	9,37/238	0.79 x 0.16/20 x 4	7.4/10
3”/80	3,14/80	2/51	5,87/149	4/100	4,68/119	6,38/162	16,69/424	6,30/160	19,72/501	10,43/265	9,80/249	2,44/62	9,37/238	0.79 x 0.16/20 x 4	7.4/10
4”/100	3,81/97	2/51	6,65/169	4/100	5,47/139	7,36/187	18,46/469	6,30/160	21,49/546	10,43/265	9,80/249	2,44/62	9,37/238	0.79 x 0.16/20 x 4	7.4/10
5”/125	4,6/117	2,24/57	6,65/169	4/100	5,90/150	8,78/223	20,31/516	6,30/160	23,34/593	10,43/265	9,80/249	2,44/62	9,37/238	0.79 x 0.16/20 x 4	11.1/15
6”/150	5,51/140	2,24/57	7,75/197	4/100	6,50/165	9,33/237	21,45/545	6,30/160	44,17/1122	10,43/265	9,80/249	2,44/62	9,37/238	0.79 x 0.16/20 x 4	14.8/20
8”/200	7,24/184	2,75/70	9,72/247	4,80/122	7,99/203	12,16/309	26,25/667	6,30/160	49,40/1255	10,43/265	9,80/249	2,44/62	9,37/238	0.98 x 0.2/25 x 5	22.2/30
10”/250	9,05/230	2,75/70	11,73/298	4,80/122	9,17/233	13,58/345	28,85/733	6,30/160	52,00/1321	10,43/265	9,80/249	2,44/62	9,37/238	0.98 x 0.2/25 x 5	33.3/45
12”/300	10,82/275	2,99/76	13,74/349	4,80/122	10,74/273	15,35/390	31,22/793	7,87/200	54,37/1381	11,14/283	10/254	2,55/65	9,76/248	0.98 x 0.2/25 x 5	51.8/70
14”/350	12/305	2,99/76	15,39/391	7,60/193	12,28/312	17,04/433	34,44/875	7,87/200	57,59/1463	11,14/283	10/254	2,55/65	9,76/248	1.38 x 0.24/35 x 6	81.4/110
16”/400	13,84/351,6	3,50/89	17,28/439	7,60/193	13,66/347	18,81/478	37,60/955	12,40/315	60,75/1543	15,31/389	13,22/336	3,58/91	11,25/286	1.38 x 0.24/35 x 6	118.4/160
18”/450	15,35/390	3,50/89	19,01/483	7,75/197	16,33/415	21,73/552	44,96/1142	12,40/315	73,63/1870	15,31/389	13,22/336	3,58/91	11,25/286	1.38 x 0.24/35 x 6	140.6/190
20”/500	17,12/435	4,49/114	21,33/542	7,75/197	17,71/450	24,05/611	48,11/1222	15,74/400	76,77/1950	15,31/389	13,34/339	3,58/91	11,25/286	1.38 x 0.24/35 x 6	199.8/270
24”/600	20,55/522	4,49/114	25,08/637	7,75/197	19,72/501	27,44/697	56,85/1444	15,74/400	85,51/2172	15,31/389	13,34/339	3,58/91	11,25/286	1.57 x 0.27/40 x 7	333/450
30”/750	26,37/670	4,60/117	33,15/842	12,60/320	24,57/624	34,76/883	70,03/1779	19,68/500	111,49/2832	16,92/430	14,37/365	4,61/117	11,93/303	1.97 x 0.31/50 x 8	407/550
36”/900	31,88/810	4,60/117	38,19/970	12,60/320	30,67/779	41,18/1046	80,11/2035	19,68/500	121,26/3080	16,92/430	14,37/365	4,61/117	11,93/303	2.36 x 0.35/60 x 9	627/850

ORBINOX
VALVE SOLUTIONS IN MORE THAN 70 COUNTRIES

FLANGE AND BOLTING DETAILS

ANSI B16.5 / B16.47, class 150

DN	K	nº	M	T	⌖ ⊕
2″	4 ¾″	4	5/8″ - 11 UNC	7/16″	2 - 2
3″	6″	4	5/8″ - 11 UNC	11/32″	2 - 2
4″	7 ½″	8	5/8″ - 11 UNC	11/32″	2 - 6
5″	8 ½″	8	3/4″ - 10 UNC	3/8″	2 - 6
6″	9 ½″	8	3/4″ - 10 UNC	3/8″	2 - 6
8″	11 ¾″	8	3/4″ - 10 UNC	15/32″	2 - 6
10″	14 ¼″	12	7/8″ - 9 UNC	15/32″	4 - 8
12″	17″	12	7/8″ - 9 UNC	15/32″	4 - 8
14″	18 ¾″	12	1″ - 8 UNC	19/32″	4 - 8
16″	21 ¼″	16	1″ - 8 UNC	19/32″	4 - 12
18″	22 ¾″	16	1 1/8″ - 7 UNC	19/32″	6 - 10
20″	25″	20	1 1/8″ - 7 UNC	7/8″	6 - 14
24″	29 ½″	20	1 1/4″ - 7 UNC	7/8″	6 - 14
30″	36″	28	1 1/4″ - 7 UNC	1 1/4″	10 - 18
36″	42 ¾″	32	1 1/2″ - 6 UNC	1 1/4″	10 - 22

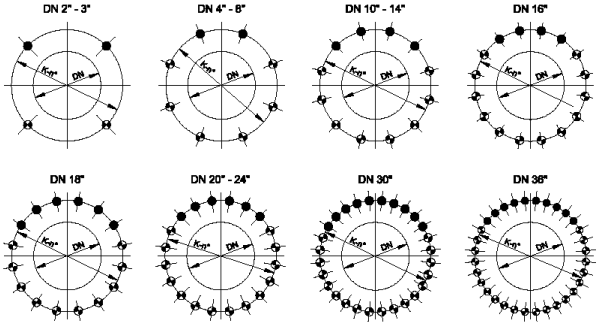

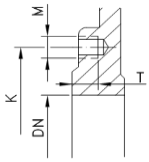

BLIND TAPPED HOLES

TAPPED THROUGH

EN 1092-2 PN10

DN	K	nº	M	T	⌖ ⊕
50	125	4	M-16	11	2 - 2
80	160	8	M-16	9	2 - 6
100	180	8	M-16	9	2 - 6
125	210	8	M-16	10	2 - 6
150	240	8	M-20	10	2 - 6
200	295	8	M-20	12	2 - 6
250	350	12	M-20	12	4 - 8
300	400	12	M-20	12	4 - 8
350	460	16	M-20	15	6 - 10
400	515	16	M-24	15	6 - 12
450	565	20	M-24	15	6 - 14
500	620	20	M-24	22	6 - 14
600	725	20	M-27	22	6 - 14
900	1050	28	M-30	32	10 - 18

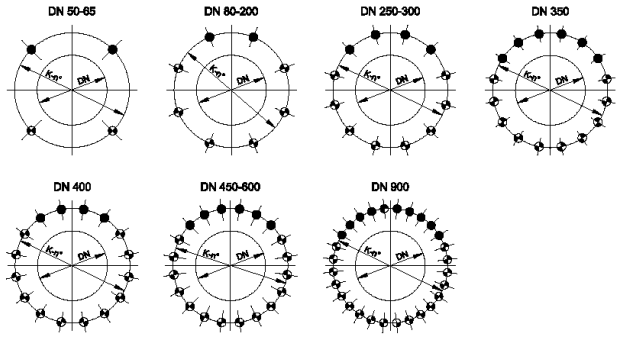

Tag:
16-FV-700
20-FV-502-1/2/3/4

MODEL **ET** **SERIES 20**

ORBINOX
VALVE SOLUTIONS IN MORE THAN 70 COUNTRIES

HEAVY DUTY KNIFE GATE VALVE

The ET(SER.20) model knife gate is an uni-directional lug type valve designed according to MSS-SP-81 and TAPPI TIS 405-8 for industrial service applications. The design of the body and seat assures non-clogging shut off on suspended solids in industries such as:

- Pulp and Paper
- Power plants
- Mining
- Chemical plants
- Wastewater treatment plants
- Food and Beverage
- Etc.

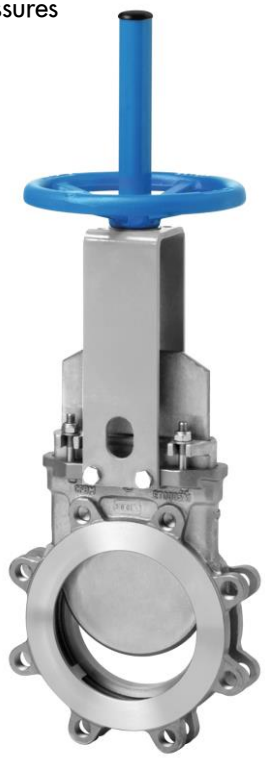

Sizes:

DN 2"/50mm to DN 36"/900mm (larger diameters on request)

Working pressure:

DN 2"/ 50mm to DN 24"/600mm	150 psi /(10 kg/cm²)
DN 30"/750mm	100 psi / (7 kg/cm²)
DN 36"/900mm	100 psi / (7 kg/cm²)

Standard flange connection:

DIN PN 10 and ANSI B16.5 (class 150)

Other flange connections available on request

Directives:

For EU Directives and other Certificates, please see the document: Directives and Certificates Compliance - Knife Gate Valves - Catalogues and Datasheets

All valves are tested prior to shipping in accordance with the standard developed by the Quality Control Department at ORBINOX.

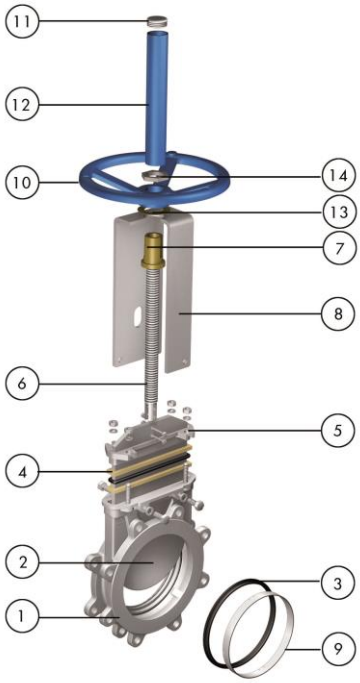

STANDARD PARTS LIST

Part:	Stainless Steel:
1- Body	CF8M
2- Gate	AISI 316
3- Seat	Metal or EPDM
4- Packing	PTFE Impreg. Synth. Fibre with an EPDM O-Ring
5- Gland Follower	CF8M
6- Stem	Stainless Steel
7- Stem nut	Brass
8- Yoke	AISI 304 / Epoxy-coated Carbon Steel
9- Seat Retainer Ring	AISI 316
10- Handwheel	GJS400 (GGG40)
11- Cap	Plastic
12- Stem Protector	Epoxy-coated Carbon Steel
13- Friction Washer	Brass
14- Nut	Zinc Plated Carbon Steel

MODEL ET SERIES 20

ORBINOX
VALVE SOLUTIONS IN MORE THAN 70 COUNTRIES

DESIGN FEATURES

BODY:

Lug type one piece integrally cast stainless steel body with reinforced ribs in larger diameters for extra body strength. Internal cast gate wedges and guides allows for tighter shutoff. Port design follows the MSS-SP-81 and Tappi TIS 405-8 standards.
The internal design of the valve avoids any build up of solids that would prevent the valve from closing.

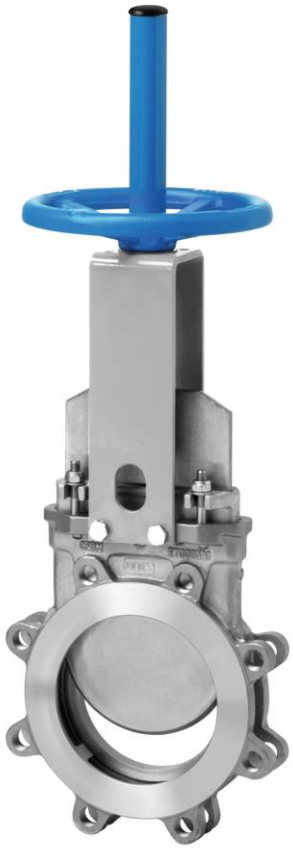

GATE:

Standard AISI 316 stainless steel gate.
The gates are polished and lapped to attain a greater seal between the gate and both the packing and the seat. The bottom of the gate edge is also machined to a bevel, so that it cuts through the solids for a tighter seal in the closed position.

SEAT: (resilient)

Unique design that mechanically locks the seal in the internal of the valve body with a stainless steel retainer ring. Standard EPDM also available in different materials such as Viton, PTFE, etc.

PACKING:

Long-life packing with several layers of PTFE impregnated fibre plus an EPDM O-ring, with an easy access packing gland ensuring a tight seal. Long-life braided packing is available in a wide range of materials.

STEM:

The standard stainless steel stem offers a long corrosion resistant life. For rising stem actuators only, a stem protector is provided for additional protection against dust while the valve in the open position.

ACTUATORS:

All actuators supplied by ORBINOX are interchangeable, and supplied with a standard mounting kit for installation purposes on site.

YOKE or ACTUATOR SUPPORT:

Made of stainless steel (EPOXY coated carbon steel available on request). Compact design makes it extremely robust even under the most severe conditions.

EPOXY COATING:

The epoxy coating on all ORBINOX cast iron and carbon steel valve bodies and components is electrostatically applied making the valves to be corrosion resistant with a high quality finished surface. The ORBINOX standard colour is RAL-5015 blue.

GATE SAFETY PROTECTION:

ORBINOX automated valves are provided with gate guards in accordance with EU Safety Standards. The design feature prevents any objects from being caught accidentally while the gate is moving.
*ONLY IN EUROPE

ORBINOX
VALVE SOLUTIONS IN MORE THAN 70 COUNTRIES

OTHER OPTIONS

Bonnet (Fig.1):

Assures tight seal to atmosphere.
Reduces packing maintenance.

V-port:

60 degree and pentagonal port design. Selection depends on the desired fluid control type.

Flush ports (Fig.2):

Allow for cleaning of solids trapped within the body cavities that can obstruct the flow or prevent the valve from closing. Depending on the process, purging can be made with air, steam, liquids, etc.

Other materials of construction:

Special alloys such as AISI 317 (1.4449), 254SMO (1.4544), Hastelloys, …

Fabricated valves:

ORBINOX designs, produces and delivers special fabricated valves for special process conditions (big sizes and/or high pressures).

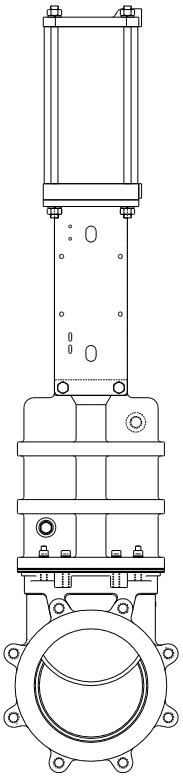

Fig.1

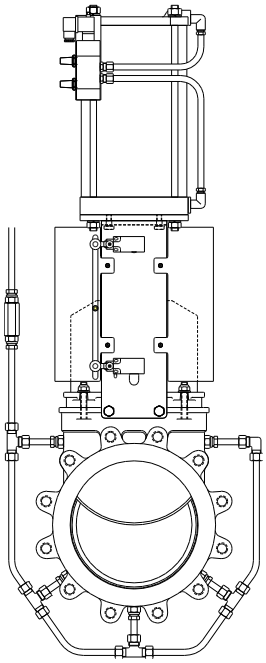

Fig.2

SURFACE TREATMENTS

Valve components can be protected or coated for a longer life expectancy, depending on the application of the valves and the valve service conditions. At ORBINOX we can offer alternative treatments and coatings for the different valve components to improve their properties against abrasion (Stellite, polyurethane…), against corrosion (Halar, Rilsan, galvanizing…) and against adherence (polishing, PTFE…).

We recommend to contact our technical department.

MODEL ET SERIES 20

ORBINOX
VALVE SOLUTIONS IN MORE THAN 70 COUNTRIES

ACTUATOR TYPES

MANUAL:
Handwheel (rising stem)
Handwheel (non-rising stem)
Chainwheel
Lever
Bevel Gear
Other (square nut)

AUTOMATIC:
Electric (rising & non-rising stem)
Pneumatic (single & double-acting)
Hydraulic

All actuators supplied by ORBINOX are interchangeable.

FAIL SAFE SYSTEMS

Used on pneumatic actuated valves

SINGLE ACTING (SPRING RETURN)

- Available from DN 2"/50mm to DN 12"/300mm
- Supply pressure:
  - min. 75 psi/ (5 kg/cm²)
  - max. 150 psi/ (10 kg/cm²)
- Options:
  - Pneumatic or electric fail open
  - Pneumatic or electric fail close
  - Other options on request

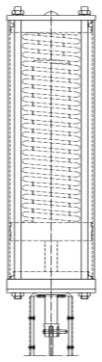

DOUBLE ACTING WITH AIR TANK

- Available for all valve sizes
- Supply pressure:
  - min. 50 psi / (3.5 kg/cm²)
  - max. 150 psi / (10 kg/cm²)
- Options:
  - Pneumatic or electric fail open
  - Pneumatic or electric fail close
  - Other options on request

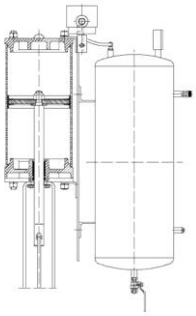

ACCESSORIES

Mechanical stops
Locking device
Manual override
Solenoid valves
Positioners
Limit switches
Proximity switches
Floor stands
Stem extensions

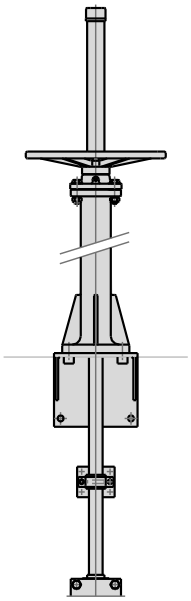

Wide range of valve extensions available

For further information about fail safe systems and valve extensions, please see EX(SER.10) catalog.

We recommend to contact with our technical department.

MODEL ET SERIES 20

ORBINOX
VALVE SOLUTIONS IN MORE THAN 70 COUNTRIES

TEMPERATURE CHART

SEAT / SEALS

Material	Max.T.(Fº)	(ºC)	Applications
Metal/Metal	>482	>250	High temp. Low tightness.
EPDM (E)	248	120	Acids and non mineral oils.
NBR (N)	248	120	Resistance to petroleum products.
FKM-FPM (V)	392	200	Chemical service./High temp.
VMQ (S)	482	250	Food service. / High temp.
PTFE (T)	482	250	Corrosion resistance.

More details and other materials under request

PACKING

Material	Max.T. (Fº)	(ºC)	pH
PTFE impregn. synth. fibre (ST)	482	250	2-13
Braided PTFE (TH)	500	260	0-14
Graphited (GR)	1112	600	0-14
Ceramic fibre (FC)	2192	1200	--

NOTE: all types include an elastomere O-ring (same material as seal), excluding TH, GR and FC.

SEAT TYPES

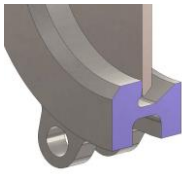

METAL / METAL
For applications with:
- High temperature
- High density media application
- When full tightness is not required

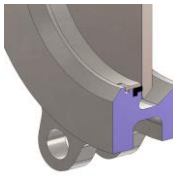

RESILIENT, TYPE "A"
- Standard resilient seat.
- Temperature limitations according to seat material selected. Review the above chart or contact our technical department for more information.
- Replaceable seat retainer ring.

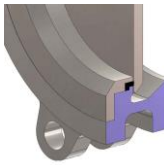

RESILIENT, TYPE "B"
- Temperature limitations according to the selected seat material. Review the above chart or contact our Technical Department for more information.
- Replaceable and reinforced seat ring available in different materials such as: AISI 316 (1.4401), CA15, Ni Hard, etc.

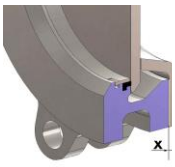

DEFLECTION CONE "C"
- Deflects the media away from any valve internal exposed parts (gate, seat,...)
- Material: AISI 316 (1.4401), CA15, Ni-Hard, PU, etc.
- Face-to-face dimension increases:
DN 2"/50mm to DN 10"250mm X = 0.35"/9mm
DN 12"/300mm to DN 24"/600mm X = 0.47"/12mm
Larger diameters on request

MODEL **ET** **SERIES 20**

ORBINOX
VALVE SOLUTIONS IN MORE THAN 70 COUNTRIES

HANDWHEEL (rising stem)

- Standard handwheel actuator.

- Consists of:
  - Handwheel: Epoxy coated Cast Iron
  - Yoke
  - Stem
  - Stem nut
  - Stem protector

- Available from DN 2"/50mm to DN 24"/600mm

- Options (on request):
  - Chainwheel
  - Non-rising stem
  - Locking Device
  - Extensions

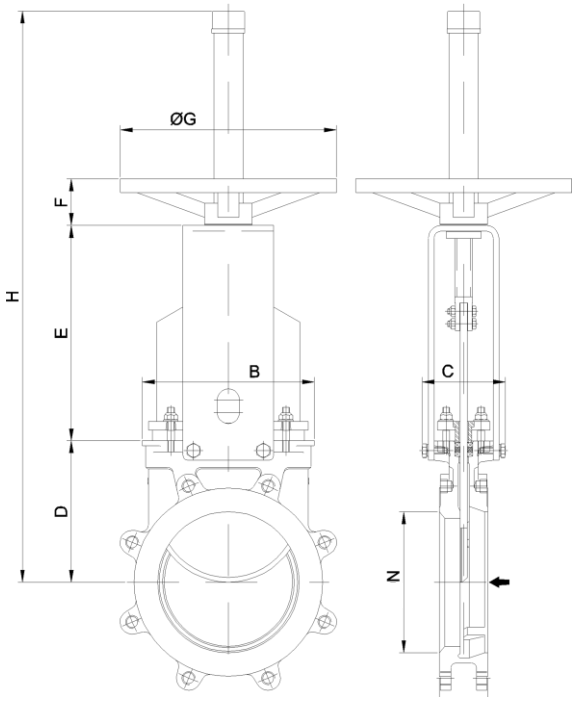

DN("/mm)	N	A	B	C	D	E	F	ØG	H	Weight (lbs/kg.)
2"/50	1,96/50	1,89/48	4,88/124	4/100	3,85/98	5,35/139	1,85/47	8,86/225	16,53/420	18/8
3"/80	3,14/80	2/51	5,87/149	4/100	4,68/119	6,38/162	1,85/47	8,86/225	18,50/470	22/10
4"/100	3,81/97	2/51	6,65/169	4/100	5,47/139	7,36/187	1,85/47	8,86/225	20,43/519	28/12,5
5"/125	4,6/117	2,24/57	6,65/169	4/100	5,90/150	8,78/223	1,85/47	8,86/225	24,13/613	35/16
6"/150	5,51/140	2,24/57	7,75/197	4/100	6,50/165	9,33/237	1,85/47	8,86/225	25,27/642	44/20
8"/200	7,24/184	2,75/70	9,72/247	4,80/122	7,99/203	12,16/309	2,64/67	12,20/310	32,28/820	70/32
10"/250	9,05/230	2,75/70	11,73/298	4,80/122	9,17/233	13,58/345	2,64/67	12,20/310	38,81/986	103/47
12"/300	10,82/275	2,99/76	13,74/349	4,80/122	10,74/273	15,35/390	2,72/69	16,14/410	42,16/1071	143/65
14"/350	12/305	2,99/76	15,39/391	7,60/193	12,28/312	17,04/433	2,60/66	16,14/410	49,01/1245	209/95
16"/400	13,84/351,6	3,50/89	17,28/439	7,60/193	13,66/347	18,81/478	2,60/66	16,14/410	52,16/1325	268/122
18"/450	15,35/390	3,50/89	19,01/483	7,75/197	16,33/415	21,73/552	2,64/67	21,65/550	59,49/1510	352/160
20"/500	17,12/435	4,49/114	21,33/542	7,75/197	17,71/450	24,05/611	2,64/67	21,65/550	63,66/1617	444/202
24"/600	20,55/522	4,49/114	25,08/637	7,75/197	19,72/501	27,44/697	2,64/67	21,65/550	74,13/1883	638/290

MODEL ET SERIES 20

ORBINOX
VALVE SOLUTIONS IN MORE THAN 70 COUNTRIES

GEAR

- Recommended for valves larger than DN14"/350mm and working pressures greater than 50 psi/(3.5 kg/cm²)

- Consists of:
  - Stem
  - Yoke
  - Bevel Gear Actuator with Handwheel (Standard Ratio 4:1)

- Available from DN 8"/200mm to DN 36"/900mm

- Options:
  - Chainwheel
  - Non-rising Stem
  - Locking Device
  - Extensions

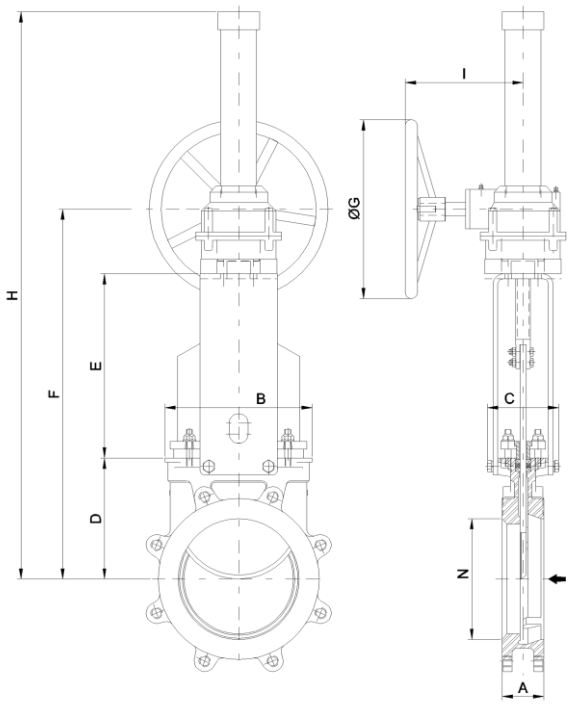

DN("/mm)	N	A	B	C	D	E	F	ØG	H	I
8"/200	7,24/184	2,75/70	9,72/247	4,80/122	7,99/203	12,16/309	22,91/582	12/300	39,05/992	7,87/200
10"/250	9,05/230	2,75/70	11,73/298	4,80/122	9,17/233	13,58/345	25,51/648	12/300	41,73/1060	7,87/200
12"/300	10,82/275	2,99/76	13,74/349	4,80/122	10,74/273	15,35/390	28,85/733	12/300	45/1143	7,87/200
14"/350	12/305	2,99/76	15,39/391	7,75/197	12,28/312	16,93/430	31,10/790	18/450	58,62/1489	10,63/270
16"/400	13,84/351,6	3,50/89	17,28/439	7,75/197	13,66/347	18,70/475	34,25/870	18/450	61,81/1570	10,63/270
18"/450	15,35/390	3,50/89	19,01/483	7,91/201	16,33/415	20,39/518	38,74/984	18/450	63,58/1615	10,63/270
20"/500	17,12/435	4,49/114	21,33/542	7,91/201	17,71/450	21,97/558	42,99/1092	18/450	71,25/1810	11,02/280
24"/600	20,55/522	4,49/114	25,08/637	7,91/201	19,72/501	26,10/663	49,13/1248	26/650	73,98/1879	11,41/290
30"/750	26,37/670	4,60/117	33,15/842	12,60/320	24,57/624	34,29/871	62,87/1597	26/650	104,33/2650	16,26/413
36"/900	31,88/810	4,60/117	38,19/970	12,60/320	30,67/779	41,18/1046	84,05/2135	26/650	123,42/3135	17,40/442

MODEL ET SERIES 20

ORBINOX
VALVE SOLUTIONS IN MORE THAN 70 COUNTRIES

PNEUMATIC CYLINDER

- The standard pneumatic actuator (double acting on-off cylinder) consists of:
  - Ø ≤ 12"/300mm: Aluminum barrels
  - Ø ≥ 14"/350mm: Composite barrels
  - Aluminum end covers
  - Stainless Steel (AISI 304) piston rod
  - Nitrile coated steel piston
- Available from DN 2"/50mm to DN 36"/900mm
- Supply Pressure: min. 50 psi/(3.5 kg/cm²) - max. 145 psi/(10 kg/cm²)
  Actuator designed with 85psi/(6 kg/cm²) air supply
- For valves installed in a horizontal position, we recommend U-type support plates and/or actuator support.
- Options:
  - Hard anodized barrel and covers
  - Stainless Steel barrel and covers
  - Over / Undersized cylinder
  - Manual override
  - Fail safe systems
  - Travel stops
- Instrumentation (on request):
  - Positioners
  - Flow regulators
  - Solenoid valves
  - Air preparation units

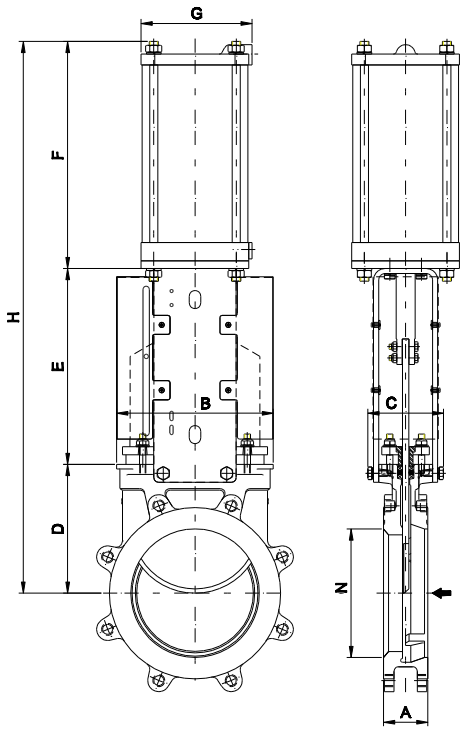

DN(“/mm)	N	A	B	C	D	E	F	G	H	Weight (lbs./kg.)	Standard Cyl.	Connect.
2”/50	1,96/50	1,89/48	4,88/124	4/100	3,85/98	5,35/139	7,00/178	4,53/115	16,22/412	22/10	C4”-2.44”/(100-62)	¼” G
3”/80	3,14/80	2/51	5,87/149	4/100	4,68/119	6,38/162	8,30/211	4,53/115	19,37/492	26/12	C4”-3.74”/(100-95)	¼” G
4”/100	3,81/97	2/51	6,65/169	4/100	5,47/139	7,36/187	9,09/231	4,53/115	21,93/557	33/15	C4”-4.52”/(100-115)	¼” G
5”/125	4,6/117	2,24/57	6,65/169	4/100	5,90/150	8,78/223	10,66/271	5,51/140	25,35/644	46/21	C5”-5.52”/(125-143)	¼” G
6”/150	5,51/140	2,24/57	7,75/197	4/100	6,50/165	9,33/237	11,65/296	5,51/140	27,48/698	59/27	C5”-6.61”/(125-168)	¼” G
8”/200	7,24/184	2,75/70	9,72/247	4,80/122	7,99/203	12,16/309	14,09/358	6,89/175	34,25/870	101/46	C6.30”-8.66”/(160-220)	¼” G
10”/250	9,05/230	2,75/70	11,73/298	4,80/122	9,17/233	13,58/345	16,85/428	8,66/220	39,60/1006	154/70	C8”-10.62”/(200-270)	3/8” G
12”/300	10,82/275	2,99/76	13,74/349	4,80/122	10,74/273	15,35/390	18,81/478	8,66/220	44,93/1141	195/89	C8”-12.60”/(200-320)	3/8” G
14”/350	12/305	2,99/76	15,39/391	7,60/193	12,28/312	18,07/459	21,61/549	10,90/277	51,96/1320	297/135	C10”-14.76”/(250-375)	3/8” G
16”/400	13,84/351,6	3,50/89	17,28/439	7,60/193	13,66/347	18,81/478	23,58/599	10,90/277	56,06/1424	356/162	C10”-16.78”/(250-425)	3/8” G
18”/450	15,35/390	3,50/89	19,01/483	7,75/197	16,33/415	21,73/552	26,77/680	15,03/382	64,84/1647	466/212	C12”-18.70”/(300-475)	½” G
20”/500	17,12/435	4,49/114	21,33/542	7,75/197	17,71/450	24,05/611	28,74/730	15,03/382	70,51/1791	638/290	C12”-20.67”/(300-525)	½” G
24”/600	20,55/522	4,49/114	25,08/637	7,75/197	19,72/501	27,44/697	32,68/830	15,03/382	79,84/2028	825/375	C12”-24.60”/(300-625)	½” G
30”/750	26,37/670	4,60/117	33,15/842	12,60/320	24,57/624	37,00/940	38,77/985	17,48/444	100,35/2549	1419/645	C14”-30.70”/(350-780)	¾” G
36”/900	31,88/810	4,60/117	38,19/970	12,60/320	30,51/775	43,30/1100	47,32/1202	20,27/515	121,14/3077	1716/780	C16”-36.61”/(400-930)	¾” G

MODEL ET SERIES 20

ORBINOX
VALVE SOLUTIONS IN MORE THAN 70 COUNTRIES

ELECTRIC ACTUATOR

- Consists of:
  - Electric actuator
  - Rising stem
  - Motor support yoke flange acc. to ISO 5210 / DIN 3338

- The standard electric motor is equiped with:
  - Manual emergency operation
  - Limit switches (open/closed)
  - Torque switches

- Available from DN 2"/50mm to DN 48"/1200mm

- Wide range of types and marks available to meet customer's needs.

- Option:
  - Non rising stem

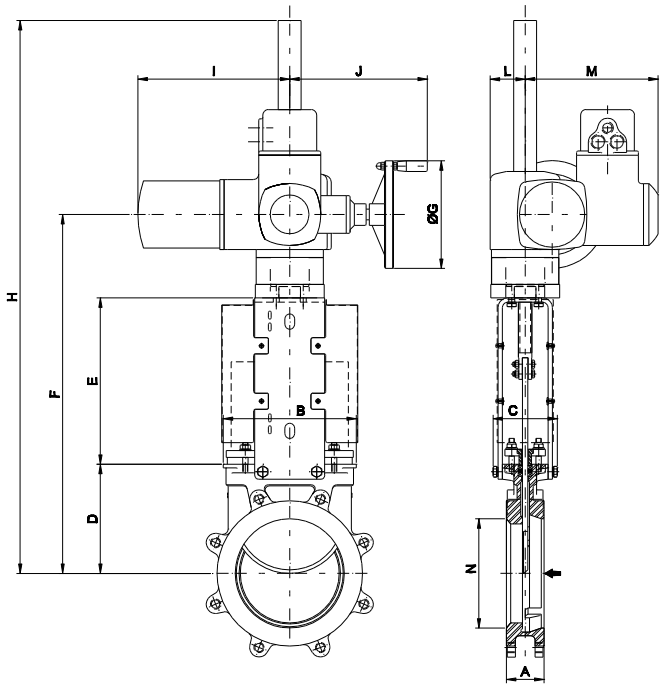

DN(“/mm)	N	A	B	C	D	E	F	ØG	H	I	J	L	M	Stem Ø x pich	Torque (ft.LBS/Nm)
2”/50	1,96/50	1,89/48	4,88/124	4/100	3,86/98	5,35/136	14,84/377	6,30/160	17,87/454	10,43/265	9,80/249	2,44/62	9,37/238	0.79 x 0.16/20 x 4	7.4/10
3”/80	3,14/80	2/51	5,87/149	4/100	4,68/119	6,38/162	16,69/424	6,30/160	19,72/501	10,43/265	9,80/249	2,44/62	9,37/238	0.79 x 0.16/20 x 4	7.4/10
4”/100	3,81/97	2/51	6,65/169	4/100	5,47/139	7,36/187	18,46/469	6,30/160	21,49/546	10,43/265	9,80/249	2,44/62	9,37/238	0.79 x 0.16/20 x 4	7.4/10
5”/125	4,6/117	2,24/57	6,65/169	4/100	5,90/150	8,78/223	20,31/516	6,30/160	23,34/593	10,43/265	9,80/249	2,44/62	9,37/238	0.79 x 0.16/20 x 4	11.1/15
6”/150	5,51/140	2,24/57	7,75/197	4/100	6,50/165	9,33/237	21,45/545	6,30/160	44,17/1122	10,43/265	9,80/249	2,44/62	9,37/238	0.79 x 0.16/20 x 4	14.8/20
8”/200	7,24/184	2,75/70	9,72/247	4,80/122	7,99/203	12,16/309	26,25/667	6,30/160	49,40/1255	10,43/265	9,80/249	2,44/62	9,37/238	0.98 x 0.2/25 x 5	22.2/30
10”/250	9,05/230	2,75/70	11,73/298	4,80/122	9,17/233	13,58/345	28,85/733	6,30/160	52,00/1321	10,43/265	9,80/249	2,44/62	9,37/238	0.98 x 0.2/25 x 5	33.3/45
12”/300	10,82/275	2,99/76	13,74/349	4,80/122	10,74/273	15,35/390	31,22/793	7,87/200	54,37/1381	11,14/283	10/254	2,55/65	9,76/248	0.98 x 0.2/25 x 5	51.8/70
14”/350	12/305	2,99/76	15,39/391	7,60/193	12,28/312	17,04/433	34,44/875	7,87/200	57,59/1463	11,14/283	10/254	2,55/65	9,76/248	1.38 x 0.24/35 x 6	81.4/110
16”/400	13,84/351,6	3,50/89	17,28/439	7,60/193	13,66/347	18,81/478	37,60/955	12,40/315	60,75/1543	15,31/389	13,22/336	3,58/91	11,25/286	1.38 x 0.24/35 x 6	118.4/160
18”/450	15,35/390	3,50/89	19,01/483	7,75/197	16,33/415	21,73/552	44,96/1142	12,40/315	73,63/1870	15,31/389	13,22/336	3,58/91	11,25/286	1.38 x 0.24/35 x 6	140.6/190
20”/500	17,12/435	4,49/114	21,33/542	7,75/197	17,71/450	24,05/611	48,11/1222	15,74/400	76,77/1950	15,31/389	13,34/339	3,58/91	11,25/286	1.38 x 0.24/35 x 6	199.8/270
24”/600	20,55/522	4,49/114	25,08/637	7,75/197	19,72/501	27,44/697	56,85/1444	15,74/400	85,51/2172	15,31/389	13,34/339	3,58/91	11,25/286	1.57 x 0.27/40 x 7	333/450
30”/750	26,37/670	4,60/117	33,15/842	12,60/320	24,57/624	34,76/883	70,03/1779	19,68/500	111,49/2832	16,92/430	14,37/365	4,61/117	11,93/303	1.97 x 0.31/50 x 8	407/550
36”/900	31,88/810	4,60/117	38,19/970	12,60/320	30,67/779	41,18/1046	80,11/2035	19,68/500	121,26/3080	16,92/430	14,37/365	4,61/117	11,93/303	2.36 x 0.35/60 x 9	627/850

ORBINOX
VALVE SOLUTIONS IN MORE THAN 70 COUNTRIES

FLANGE AND BOLTING DETAILS

ANSI B16.5 / B16.47, class 150

DN	K	nº	M	T	⌖ ⊕
2″	4 ¾″	4	5/8″ - 11 UNC	7/16″	2 - 2
3″	6″	4	5/8″ - 11 UNC	11/32″	2 - 2
4″	7 ½″	8	5/8″ - 11 UNC	11/32″	2 - 6
5″	8 ½″	8	3/4″ - 10 UNC	3/8″	2 - 6
6″	9 ½″	8	3/4″ - 10 UNC	3/8″	2 - 6
8″	11 ¾″	8	3/4″ - 10 UNC	15/32″	2 - 6
10″	14 ¼″	12	7/8″ - 9 UNC	15/32″	4 - 8
12″	17″	12	7/8″ - 9 UNC	15/32″	4 - 8
14″	18 ¾″	12	1″ - 8 UNC	19/32″	4 - 8
16″	21 ¼″	16	1″ - 8 UNC	19/32″	4 - 12
18″	22 ¾″	16	1 1/8″ - 7 UNC	19/32″	6 - 10
20″	25″	20	1 1/8″ - 7 UNC	7/8″	6 - 14
24″	29 ½″	20	1 1/4″ - 7 UNC	7/8″	6 - 14
30″	36″	28	1 1/4″ - 7 UNC	1 1/4″	10 - 18
36″	42 ¾″	32	1 1/2″ - 6 UNC	1 1/4″	10 - 22

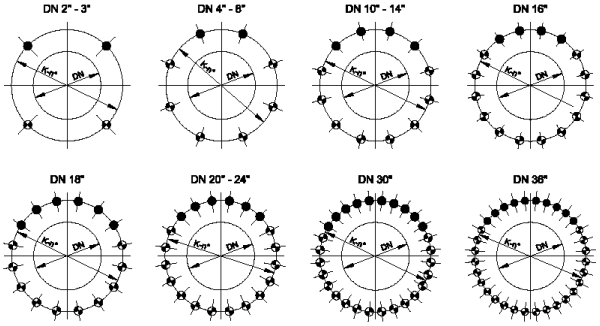

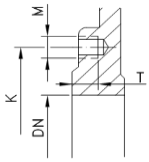

BLIND TAPPED HOLES

TAPPED THROUGH

EN 1092-2 PN10

DN	K	nº	M	T	⌖ ⊕
50	125	4	M-16	11	2 - 2
80	160	8	M-16	9	2 - 6
100	180	8	M-16	9	2 - 6
125	210	8	M-16	10	2 - 6
150	240	8	M-20	10	2 - 6
200	295	8	M-20	12	2 - 6
250	350	12	M-20	12	4 - 8
300	400	12	M-20	12	4 - 8
350	460	16	M-20	15	6 - 10
400	515	16	M-24	15	6 - 12
450	565	20	M-24	15	6 - 14
500	620	20	M-24	22	6 - 14
600	725	20	M-27	22	6 - 14
900	1050	28	M-30	32	10 - 18

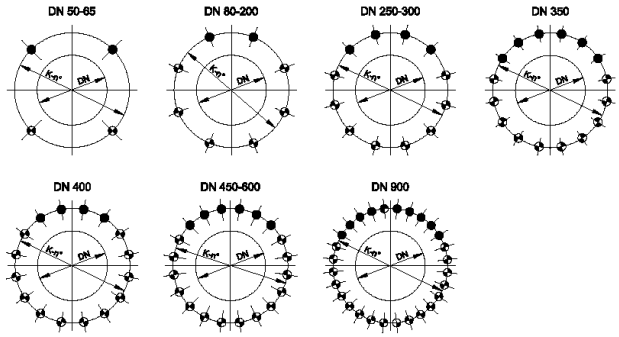

TAG:16-HV-700

Diaphragm Valve Type 317

Standard Features

- **Size**
  ½"–6"
- **Valve Body Material**
  PVC, CPVC, PROGEF Standard
  Polypropylene, SYGEF PVDF
- **Diaphragm Material**
  EPDM, PTFE, FPM, NBR, or Hypalon
- **Connection**
  ANSI flange
- **Pressure rating**
  150 PSI
- **Easy replacement of diaphragm**

Optional Features

- **Pneumatic actuation**
- **Lockable handle (½"–2½")**
- **Connection**
  ISO/DIN flanged connection
  Union connection (½"–2")
  Spigot connection (½"–2")



General

The Type 317 diaphragm valve incorporates a robust design with several options for wetted materials. Diaphragms are available in EPDM, PTFE, FPM, NBR, or Hypalon. The valve body is available in PVC, CPVC, PP, and PVDF, allowing the valve to handle most chemical applications. In addition to being chemically resistant, the GF diaphragm valves are often the best solution for applications where particulates are present. The flanged connections allow for easy repair or replacement in the field.

+GF+

GEORG FISCHER
PIPING SYSTEMS

Diaphragm Valve Type 317

Pressure-Temperature Diagrams

The following pressure temperature diagrams are based on a lifetime of 25 years and the medium water or similar media.

Remark: At temperatures below 0°C, please check the torque of the bolts of the membrane according to the recommended values after the system is in use.

PP

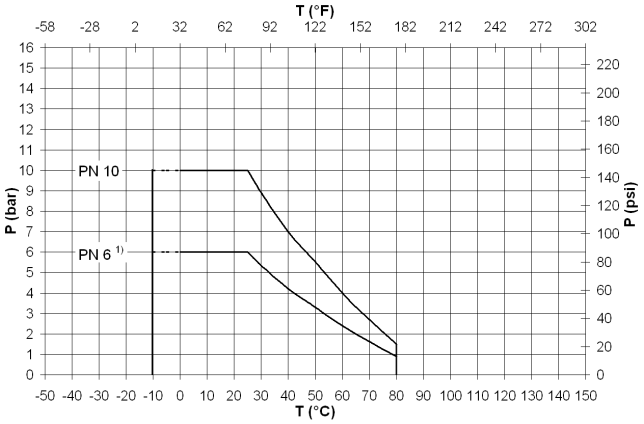

1) 4" and 6" flanged
p Permissible pressure in bar, psi
T Temperature in °C, °F

In case of applications with temperatures in the range of the dotted lines, please contact your GF representative.

PVC

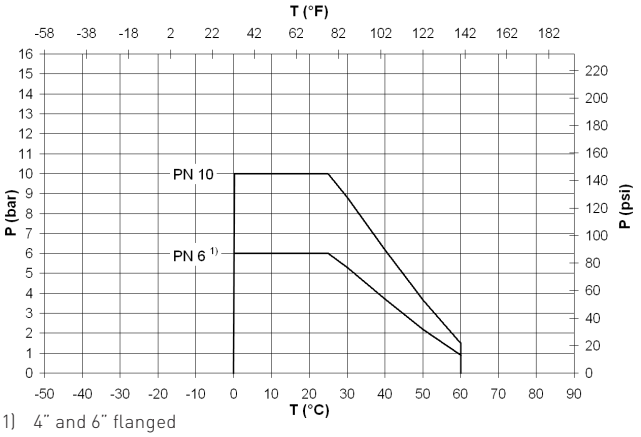

1) 4" and 6" flanged
p Permissible pressure in bar, psi
T Temperature in °C, °F

PVDF

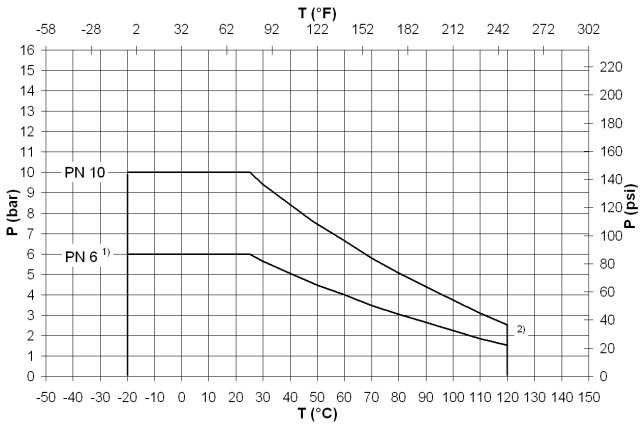

1) 4" and 6" flanged
p Permissible pressure in bar, psi
T Temperature in °C, °F

CPVC

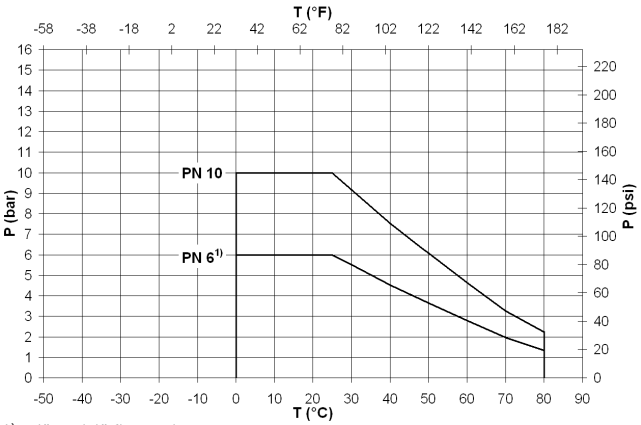

1) 4" and 6" flanged
p Permissible pressure in bar, psi
T Temperature in °C, °F

Diaphragm Valve Type 317

Technical Data

Operating Torque (average values)

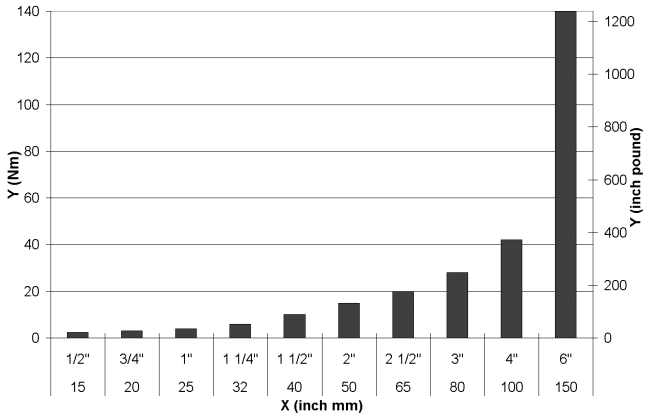

X Size DN (mm, inch)
Y Torque (Nm, inch pound)

Flow Characteristics

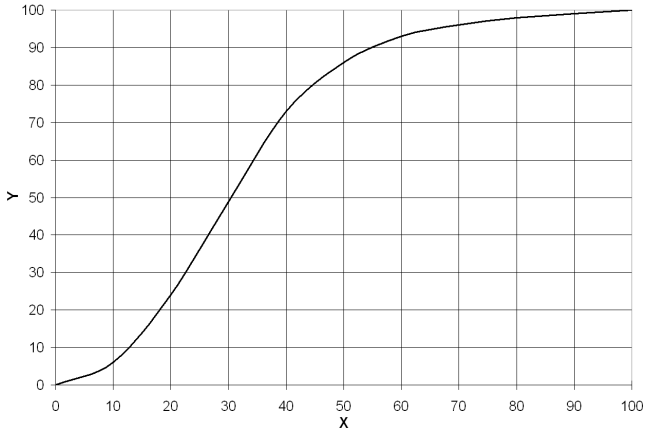

X Lift (%)
Y Flow factor kv, cv (%)

Pressure Loss

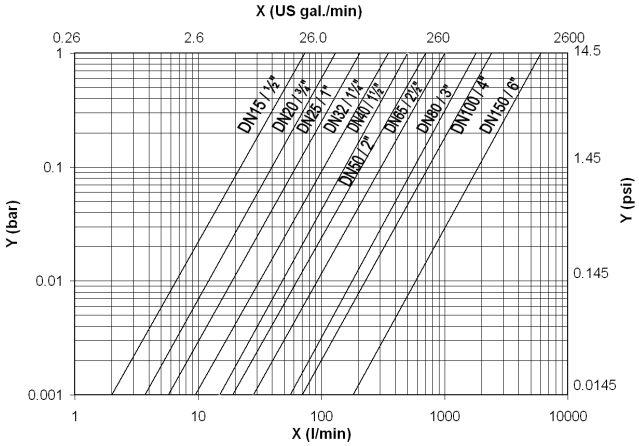

Medium: water 20°C
X Flow rate (l/min, US gal/min
Y Pressure loss Δp (bar, psi)

Cv Values

The Cv values for each intermediate valve position can be determined using the flow value characteristic and the Cv values.

DN inch	d mm	kv 100 l/min (Δp=1 bar)	Cv US gal/min (Δp=1 psi)	kv 100 m³/h (Δp=1 bar)
½	20	72	5.0	4.3
¾	25	137	9.6	8.2
1	32	207	14.5	12.4
1¼	40	354	24.8	21.2
1½	50	517	36.2	31.0
2	63	713	49.9	42.8
2½	75	992	69.5	59.5
3	90	1700	119.0	102.0
4	110	2700	189.0	162.0
6	160	6033	422.3	362.0

Dimensions for Type 317 Diaphragm Valve

Inch size	A inch	B CPVC inch	B PVC/ PP/ PVDF inch	D inch	E CPVC inch	E PVC/ PP/ PVDF inch	H inch	L PVC/ PP/ PVDF inch	L CPVC inch	M inch	I inch	No. bolt holes	F inch	K* mm	T inch	Lift inch
½	0.55	3.50	3.74	3.15	0.50	0.43	3.54	5.12	5.91	2.38	0.55	4	0.98	M6	0.47	0.31
¾	0.69	3.88	4.13	3.15	0.50	0.47	4.02	5.91	6.54	2.75	0.55	4	0.98	M6	0.47	0.43
1	0.83	4.25	4.53	3.70	0.56	0.55	4.67	6.30	7.09	3.13	0.55	4	0.98	M6	0.47	0.51
1¼	1.00	4.63	5.51	4.61	0.63	0.59	4.96	7.09	7.56	3.50	0.71	4	1.77	M8	0.59	0.63
1½	1.28	5.00	5.91	4.61	0.69	0.63	5.47	7.87	8.27	3.88	0.71	4	1.77	M8	0.59	0.83
2	1.53	6.00	6.50	5.98	0.75	0.71	6.77	9.06	9.06	4.75	0.71	4	1.77	M8	0.59	1.10
2½	1.81	7.28	7.28	5.98	0.79	0.79	7.91	11.42	11.42	5.50	0.71	4	2.76	M8	0.59	1.18
3	2.24	7.87	7.87	10.63	1.38	1.38	10.43	12.20	12.20	6.00	0.71	4	4.72	M12	0.91	1.57
4	2.72	8.86	8.86	10.63	1.38	1.38	11.97	13.78	13.78	7.50	0.71	8	4.72	M12	0.91	1.97
6	4.25	—	11.22	15.75	—	1.38	17.20	18.90	—	9.50	0.87	8	3.94	M12	0.91	2.76

* metric thread
Loose ring flanges ½"–2½"
Integrally molded, fixed flanges 3"–6"

Inch size	Weight PVC/CPVC lbs	Weight PVDF lbs	Weight PP lbs
½	1.0	1.3	1.2
¾	1.5	1.9	1.8
1	2.2	2.6	2.7
1¼	3.5	5.1	3.1
1½	4.2	5.1	5.3
2	7.1	8.2	7.9
2½	9.5	12.6	12.0
3	21.4	23.6	19.0
4	30.0	32.8	25.0
6	59.5	68.3	55.2

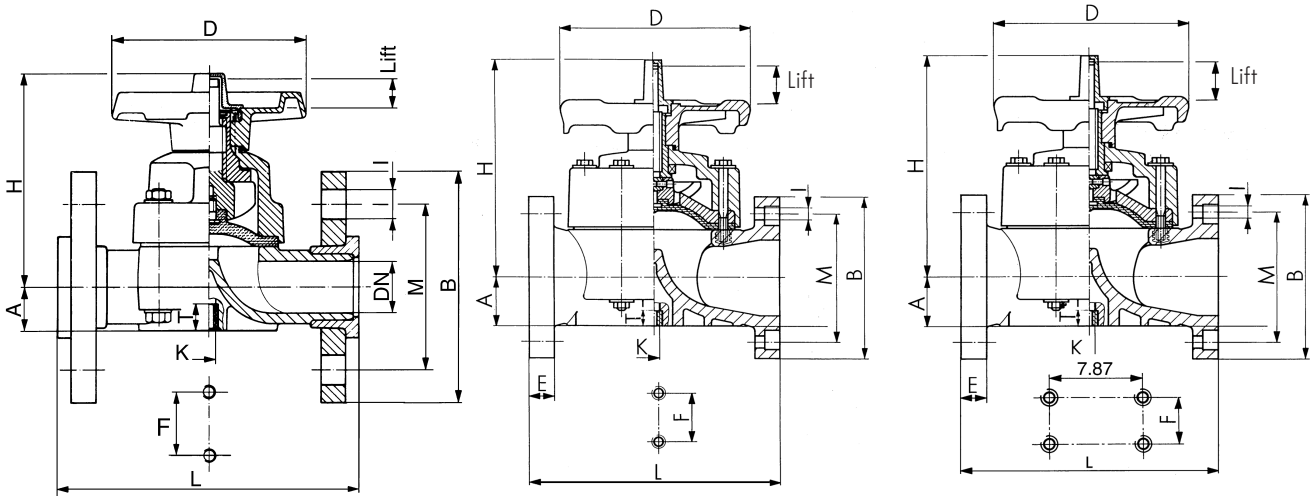

½" – 2½"
(2½" is socket body/spigot flange adapter)

3" – 4"

6"

+GF+

GF Piping Systems → worldwide at home

Our sales companies and representatives
ensure local customer support in over 100 countries.

www.piping.georgfischer.com



The technical data is not binding. They neither constitute expressly warranted characteristics nor guaranteed properties nor a guaranteed durability. They are subject to modification. Our General Terms of Sale apply.

Adding Quality to People's Lives

Australia
George Fischer Pty Ltd
Riverwood NSW 2210 Australia
Phone +61(0)2 9502 8000
australia.ps@georgfischer.com
www.georgefischer.com.au

Austria
Georg Fischer
Rohrleitungssysteme GmbH
3130 Herzogenburg
Phone +43(0)2782 856 43-0
austria.ps@georgfischer.com
www.georgfischer.at

Belgium / Luxembourg
Georg Fischer NV/SA
1070 Bruxelles/Brüssel
Phone +32(0)2 556 40 20
be.ps@georgfischer.com
www.georgfischer.be

Brazil
George Fischer Ltda
04795-100 São Paulo
Phone +55(0)11 5687 1311
br.ps@georgfischer.com

Canada
Georg Fischer Piping Systems Ltd
Brampton, ON L6T 4E3
Phone +(905) 792-8005
ca.ps@georgfischer.com
www.gfpiping.ca

China
Georg Fischer
Piping Systems Ltd Shanghai
Pudong, Shanghai 201319
Phone +86(0)21 58 13 33 33
china.ps@georgfischer.com
www.cn.piping.georgfischer.com

Denmark / Iceland
Georg Fischer A/S
2630 Taastrup
Phone +45 (0)70 22 19 75
info.dk.ps@georgfischer.com
www.georgfischer.dk

France
Georg Fischer SAS
95932 Roissy Charles de Gaulle Cedex
Phone +33(0)1 41 84 68 84
fr.ps@georgfischer.com
www.georgefischer.fr

Germany
Georg Fischer GmbH
73095 Albershausen
Phone +49(0)7161 302-0
info.de.ps@georgfischer.com
www.georgfischer.de

India
Georg Fischer Piping Systems Ltd
400 076 Mumbai
Phone +91 224007 2001
in.ps@georgfischer.com
www.georgfischer.in

Italy
Georg Fischer S.p.A.
20063 Cernusco S/N (MI)
Phone +3902 921 861
it.ps@georgfischer.com
www.georgfischer.it

Japan
Georg Fischer Ltd
556-0011 Osaka,
Phone +81(0)6 6635 2691
jp.ps@georgfischer.com
www.georgfischer.jp

Korea
Georg Fischer Piping Systems
Guro-3 dong, Guro-gu, Seoul, Korea
Phone +82(0)2 2081 1450
Fax +82(0)2 2081 1453
kor.ps@georgfischer.com

Malaysia
Georg Fischer (M) Sdn. Bhd.
40460 Shah Alam, Selangor
Phone +60 (0)3 5122 5585
conne.kong@georgfischer.com

Mexico
Georg Fischer S.A. de C.V.
Apodaca, Nuevo Leon
CP66636 Mexico
Phone +52 (81)1340 8586
Fax +52 (81)1522 8906

Middle East
George Fischer Piping Systems
Dubai, United Arab Emirates
Phone +971 4 289 49 60
info.export@georgfischer.com
www.export.georgfischer.com

Netherlands
Georg Fischer N.V.
8161 PA Epe
Phone +31(0)578 678 222
nl.ps@georgfischer.com
www.georgfischer.nl

Norway
Georg Fischer AS
1351 Rud
Phone +47(0)67 18 29 00
no.ps@georgfischer.com
www.georgfischer.no

Poland
Georg Fischer Sp. z o.o.
02-226 Warszawa
Phone +48(0)22 313 10 50
poland.ps@georgfischer.com
www.georgfischer.pl

Romania
Georg Fischer
Piping Systems Ltd
020257 Bucharest - Sector 2
Phone +40(0)21 230 53 80
ro.ps@georgfischer.com
www.export.georgfischer.com

Russia
Georg Fischer Piping Systems
Moscow 125047
Tel. +7 495 258 60 80
ru.ps@georgfischer.com
www.georgfischer.ru

Singapore
George Fischer Pte Ltd
528 872 Singapore
Phone +65(0)67 47 06 11
sgp.ps@georgfischer.com
www.georgefischer.com.sg

Spain / Portugal
Georg Fischer S.A.
28046 Madrid
Phone +34(0)91 781 98 90
es.ps@georgfischer.com
www.georgfischer.es

Sweden / Finland
Georg Fischer AB
12523 Älvsjö-Stockholm
Phone +46(0)8 506 775 00
info.se.ps@georgfischer.com
www.georgfischer.se

Switzerland
Georg Fischer
Rohrleitungssysteme (Schweiz) AG
8201 Schaffhausen
Phone +41(0)52 631 30 26
ch.ps@georgfischer.com
www.piping.georgfischer.ch

Taiwan
Georg Fischer Piping Systems
San Chung City, Taipei Hsien
Phone +886 2 8512 2822
Fax +886 2 8512 2823

United Kingdom / Ireland
George Fischer Sales Limited
Coventry, CV2 2ST
Phone +44(0)2476 535 535
uk.ps@georgfischer.com
www.georgefischer.co.uk

USA / Latin America / Caribbean
Georg Fischer LLC
Tustin, CA 92780-7258
Phone +1(714) 731 88 00
Toll Free 800 854 40 90
us.ps@georgfischer.com
www.us.piping.georgefischer.com

Item #M278c (5/09)
© Georg Fischer LLC 2009
Printed in U.S.A.

+GF+

GEORG FISCHER
PIPING SYSTEMS

SSI's-QTS4114 NPT SADDLE INSTALLATION

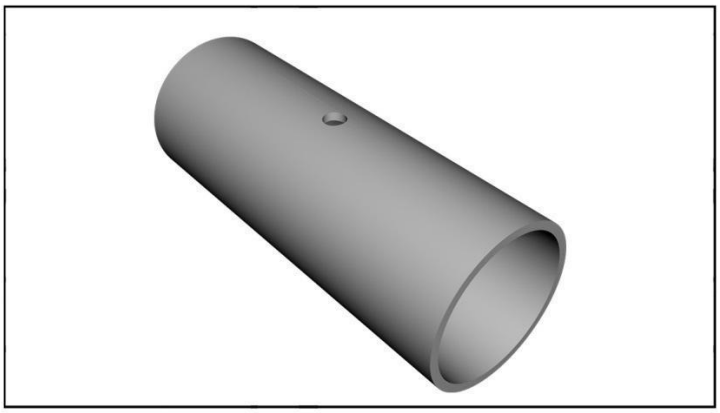

1. SSI supplies headers with factory drilled (16mm) holes for field installation of saddles.

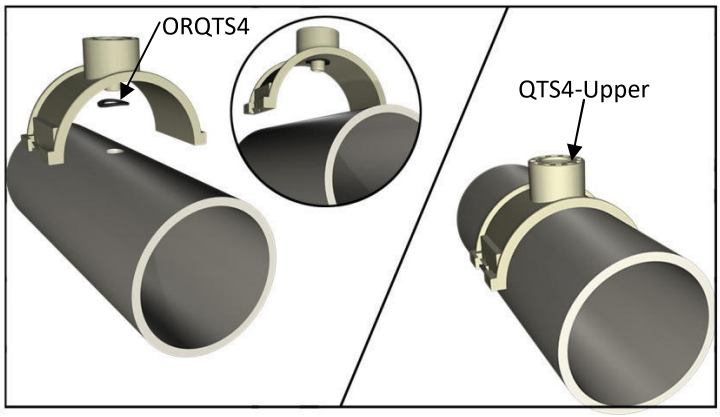

2. Insert O-ring (ORQTS4) in to the upper saddle base as shown. Next, place the upper saddle on to the pipe by inserting saddle register into the pipe hole

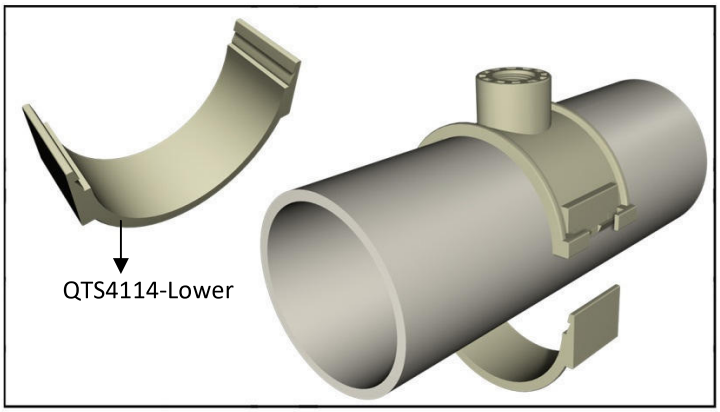

3. Next place QTS4114-Lower from under side as shown next step.

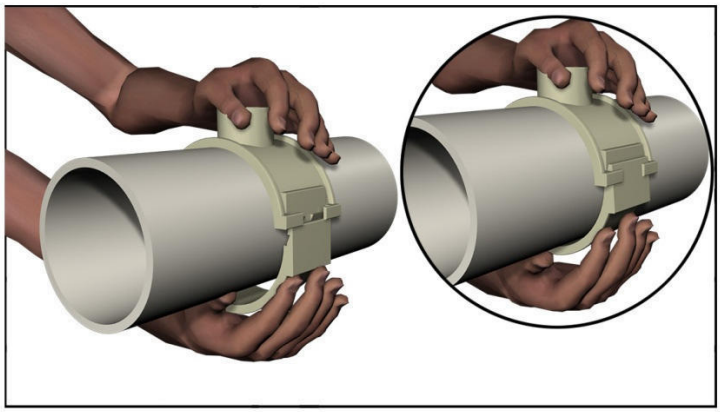

4. Hold the QTS4-upper with one hand, push one side of QTS4114- lower with other hand as shown.

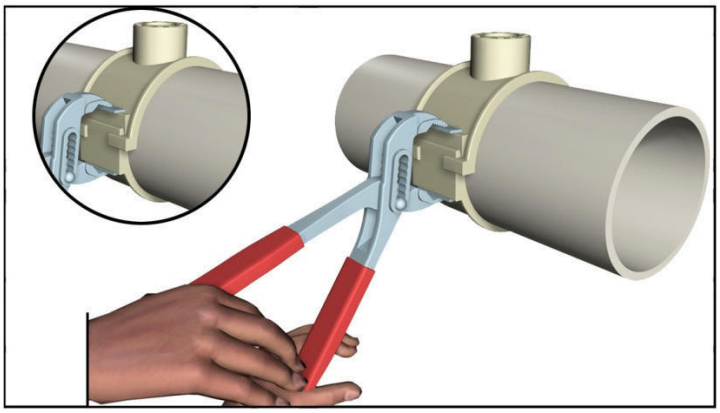

5. Use a pair of channel lock plyers in the centre of saddle as shown in above. Lock the other side of lower saddle to complete the installation (will hear the snap of the clip).

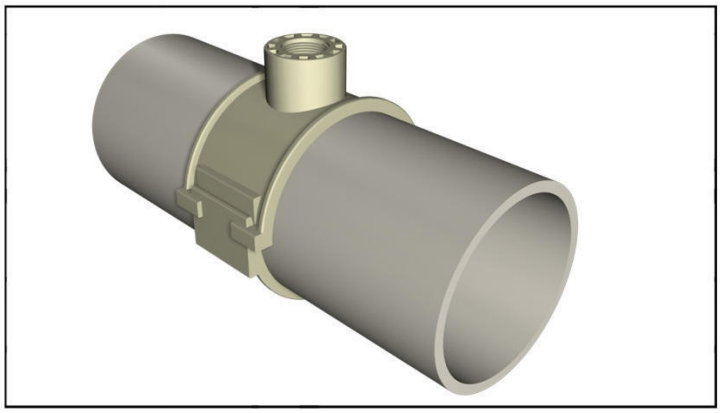

6. Make sure the lower saddle properly locked in to the upper one to complete the NPT saddle installation.

SSI Aeration

Installation Procedure of General Plant Installation (Disc with Q C)

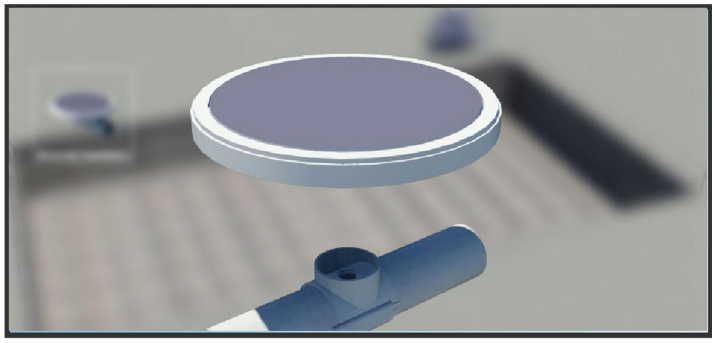

22.

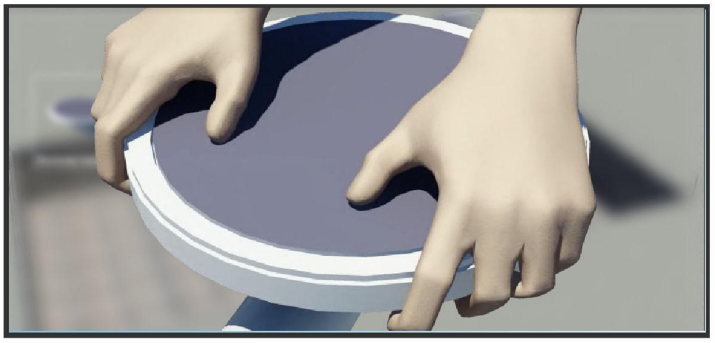

23. Push down diffuser and turn diffuser to lock.
Note: Make certain it locks.

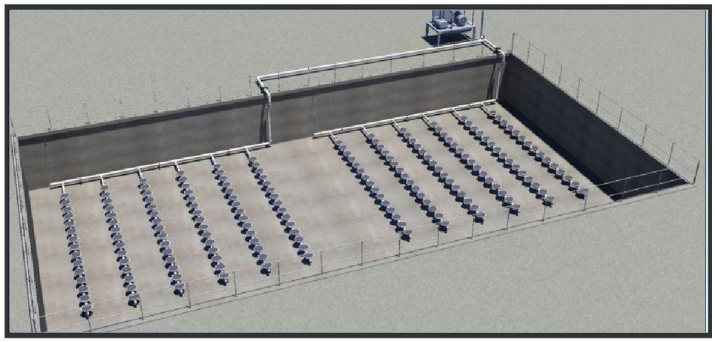

24. Diffusers installed in tank view.

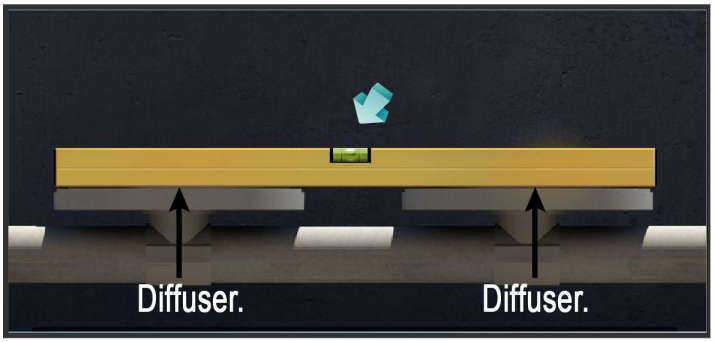

25. Diffuser should be installed on a common plane. A variance in elevation of 3/8”(10mm) is acceptable between diffuser.

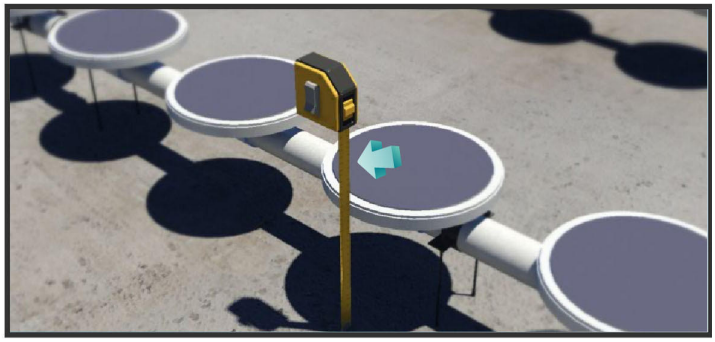

26.



27. Fill tank with clean water. Do not fill more than 12”(300mm) above top of the diffusers at this time.

SSI Aeration

Installation Procedure of General Plant

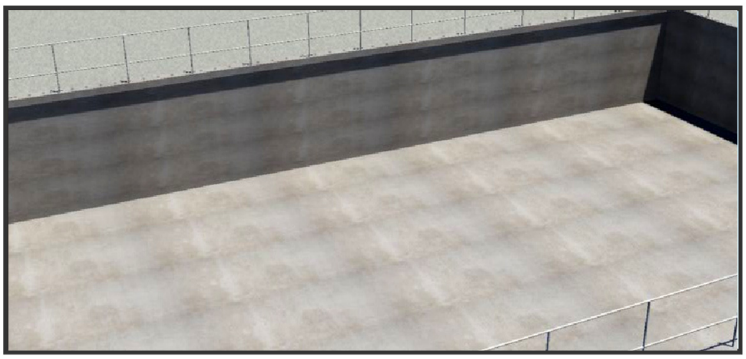



1. The concrete must be cured before any holes for the pipe supports are drilled. Allow concrete to cure before drilling holes for supports.

2. Drill suitable holes at specified location. [For location refer submittal drawings.]

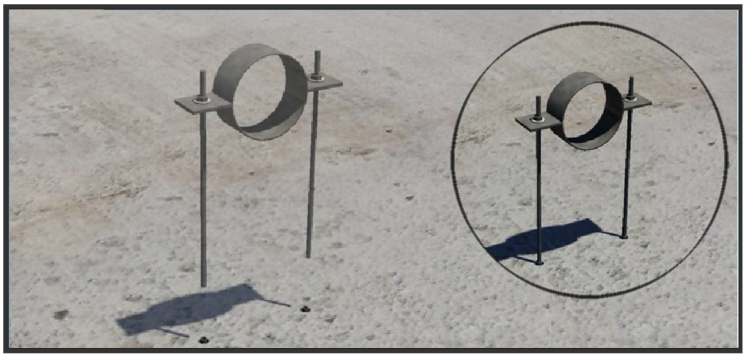

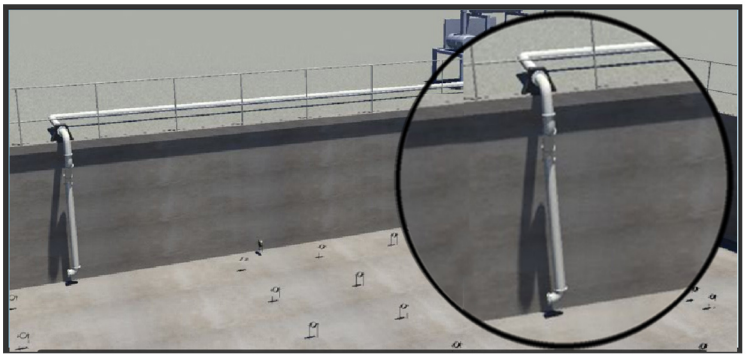

3. Holes must be clean & dry before installing anchor bolts.

4. Install the drop pipe supports and connect the drop pipe to main supply header



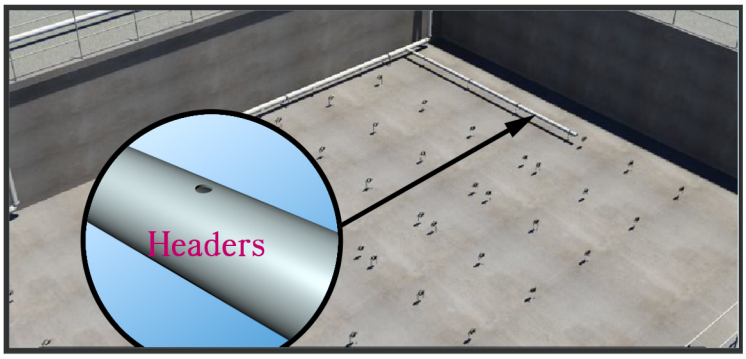

5. Connect the manifold pipe to the drop pipe.

6. Install headers on the supports.
The first support after expansion joint is a fixed support. Remaining supports are guide supports.



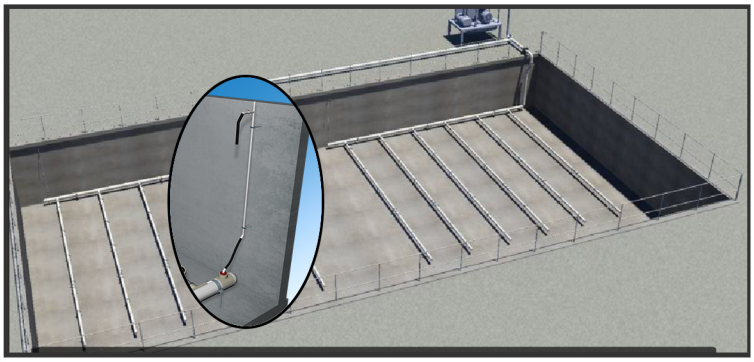

7. Maximum length of header is 20'. Header sections are connected with expansion joints. Make sure all headers with suitable holes.

8. Install moisture purge at end of the manifold. [Moisture purge system comes ready to use from the factory]

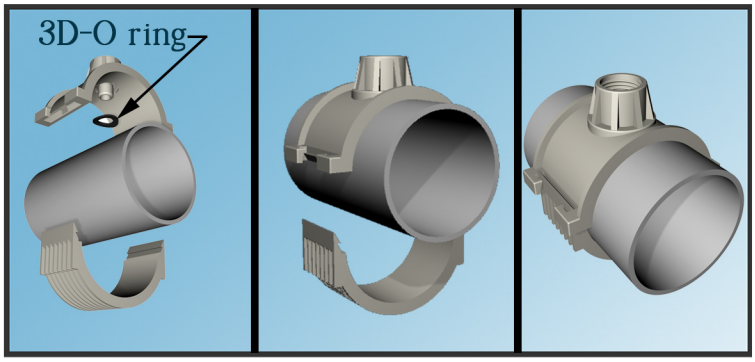

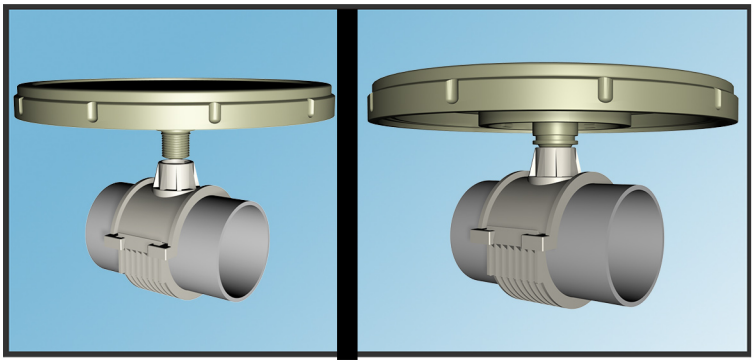

9. Place upper saddle on header using 3D-O ring in to saddle base, next push lower saddle from down side as shown to complete the NPT saddle installation.

10. Hands tighten the diffuser unit by rotating clockwise. DO NOT OVER TIGHTEN.

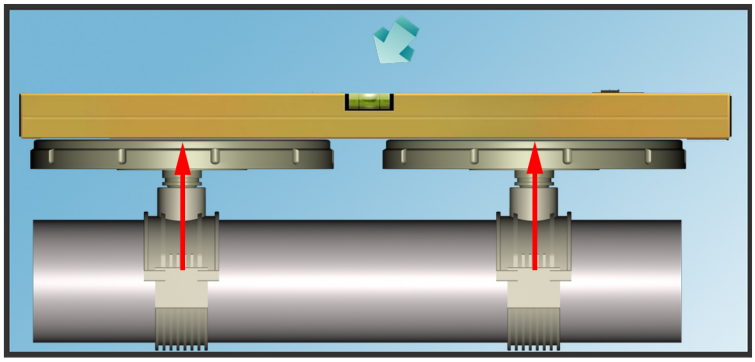



11. Diffusers should be installed on a common plane. A variance in elevation of 3/8" (10") is acceptable between diffusers.

12. Fill Tank with clean water. Do not fill more than 12" (300mm) above top of the diffusers at this time.



13. Fill tank with clean water. Do not fill more than 12"(300mm) above top of the diffusers at this time.

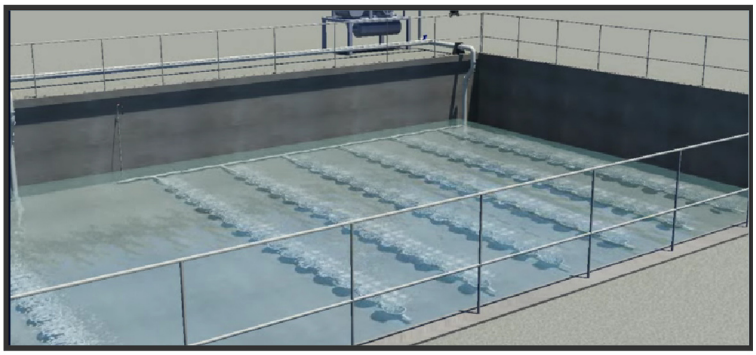

14. Check water levels right above & right below for any leaks & even bubbling pattern.

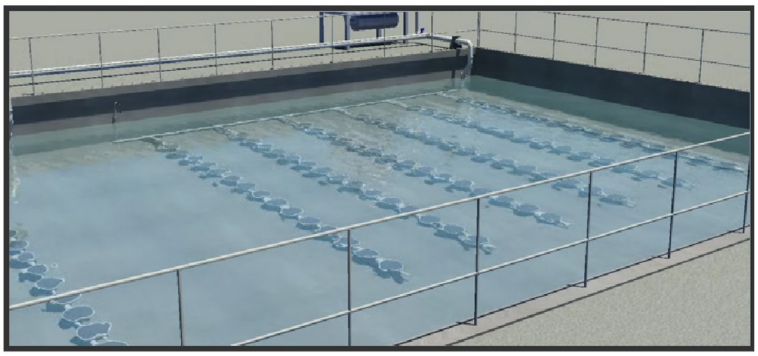

15. Fill tank to top with clean water and test for leaks.



16. Check moisture purge for water to rule out negative pressure leaks.

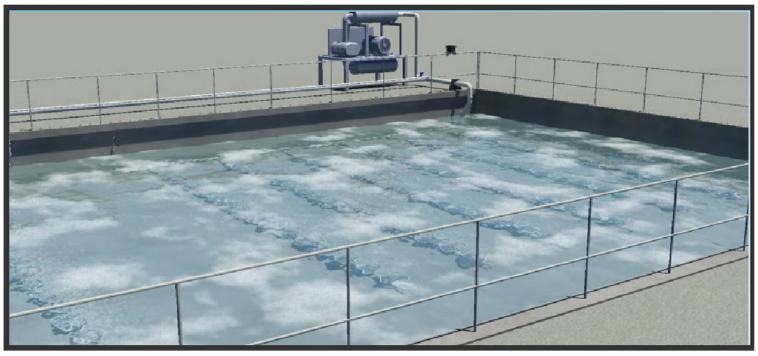

17. Your SSI aeration system ready to use.

SSI PROPOSAL

SSI Aeration Inc.





Fine Bubble Diffusers
Disc Type



Fine Bubble Diffusers
Tube Type



Coarse Bubble Diffusers
Reliability Built In

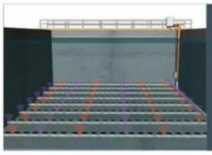

Telemetry Systems
Real Time Camera Monitoring



Advanced
Membrane Materials
PTFE



Retrievable Systems
Easy to Maintain



Complete Aeration Systems
Designed for You



OEM Replacement
Membranes
Retrofit Existing Systems

SSI Aeration Inc. 4 Tucker Drive, Poughkeepsie, NY 12603 United States America.
Tel. +1 845-454-8171 Fax: +1 845-454-8094, Email: info@ssiaeration.com

SSI Aeration Inc.
4 Tucker Drive, Poughkeepsie,
NY 12603, United States America
Tel. +1 845-454-8171
Fax: +1 845-454-8094
Email: info@ssiaeration.com
www.ssiaeration.com

September 9th, 2024.

File: RFP052822, NY (Suez)_P-060122 [D]

SUEZ WATER TECHNOLOGIES
Attention: Fan, Fengshen (WTS)
E-Mail: fengshen.fan@suez.com
Phone: 905 469 7792

Ref: RFP052822, NY - **Proposal**

Revision 'A': Revised with Tank Dimensions as per email dated on 07/06/2022.
Revision "B": Revised with Tank dimensions & AOR Loadings as per email dated on 08/19/2022.
Revision" C": Revised with Tank dimensions & AOR Loadings as per email dated on 02/13/2023.
Revision "D" with Tank dimensions & AOR Loadings as per email dated on 09/04/2024.

Sir/Madam,

In response to your email and based on the information, SSI as an ISO-9001 certified corporation is pleased to submit this proposal for the design, manufacture & supply of Aeration Equipment for **Three (3) Biological Trains** with POD270-E (9") Fine Bubble Disc Diffusers with EPDM Membranes.

Unless otherwise noted equipment supplied will meet or exceed any engineer specified performance requirements and/or called in the RFP/Email and Design calculations & Preliminary Drawings showing the general arrangement of diffuser/Piping layouts are included (Refer item *1*).

A. Scope of supply is complete with all components from the downstream of air supply line connection (±6" above water level) starting with SS Vanstone and loose follower flange including drop pipe *(Isolation valve and associated accessories are not included in SSI supply limit)*

Each Train has two (2) zones; Each Zone is 44.75' x 24' x 20.5' (SWD) and Aeration Equipment Supply ***per zone*** is listed below:

ZONE	304SS Sch.10 Drop pipe ±20'			PVC Sch.40 Manifold ±25'			Ø4" PVC SDR 26 Headers c/w Factory installed diffuser			POD270-E Diffusers
	Size	304SS Supports	304SS Couplings	Size	304SS Supports	PVC Couplings	Length (ft)	304SS Supports	PVC Unions	
#1	Ø8"	3	1	Ø8"	5	1	±440'	77	33	440
#2	Ø6"	3	1	Ø6"	5	1	±320'	56	24	312
Number of AFD270-E Diffuser for One (1) Biological Train										**752**

COMMON FOR ALL TRAINS

Total number of AFD270-E Diffuser for Three (3) Biological Trains (752/Tank) * 3 = **2,256**

B. Spares:
- AFD270-E Diffuser Assemblies – **9**
- 4" 304SS Supports - **5**
- 4" Repair Couplings – **2**
- Special Tools Set – **1**

C. Estimated Freight: Orange Town of NY, 10962 *(Subject to change at actuals)*

SSI Aeration Inc.
4 Tucker Drive
Poughkeepsie, N.Y. 12603
United States America.
Tel. +1 845-454-8171
Fax: +1 845-454-8094
Email: info@ssiaeration.com
www.ssiaeration.com

DIFFUSED AERATION SYSTEM

Doc #	**SD00013238**	Revision #	**3**
Project	**RFP052822,NY (Suez)**	Date	**9-6-2024**
Process Type	**MBR**	Units	**Imperial**

Three (3) Biological Train design for 3 tank(s)			
Tank Type	**Aeration**	Tank Shape	**Rectangular**
Type of Input	**AOR**	Diffuser Type	**AFD270-1mm**

Three (3) Biological Train / design for 3 tank(s)			
	Units	**Aerobic Zone #1**	**Aerobic Zone #2**
Design Scenario		**Standard**	**Standard**
AOR	(Lbs/day)	8,208	5,856
AOR	(lbs O_2/hr)	342	244
Site Elevation	(ft)	140	140
Length per tank	(ft)	44.75	44.75
Width per tank	(ft)	24	24
Diffuser Water Depth	(ft)	19.5	19.5
SOR	**(lbs O_2/hr)**	**955.77**	**681.89**
Total Airflow	**(SCFM)**	**2,366**	**1,710**
Airflow Per Diffuser	**(SCFM)**	**1.79**	**1.83**
Diffuser Quantity	**(pcs)**	**1,320**	**936**
Diffuser Density	**(%)**	**16.8**	**11.91**
SOTE	**(%/ft)**	**1.98**	**1.96**
Total SOTE	**(%)**	**38.69**	**38.2**
Blower Pressure	(PSIG)	9.74	9.74
Pressure @ Top Of Dropleg	(PSIG)	9.18	9.19

II. Preliminary Drawings

THREE (3) BIOLOGICAL TRAINS

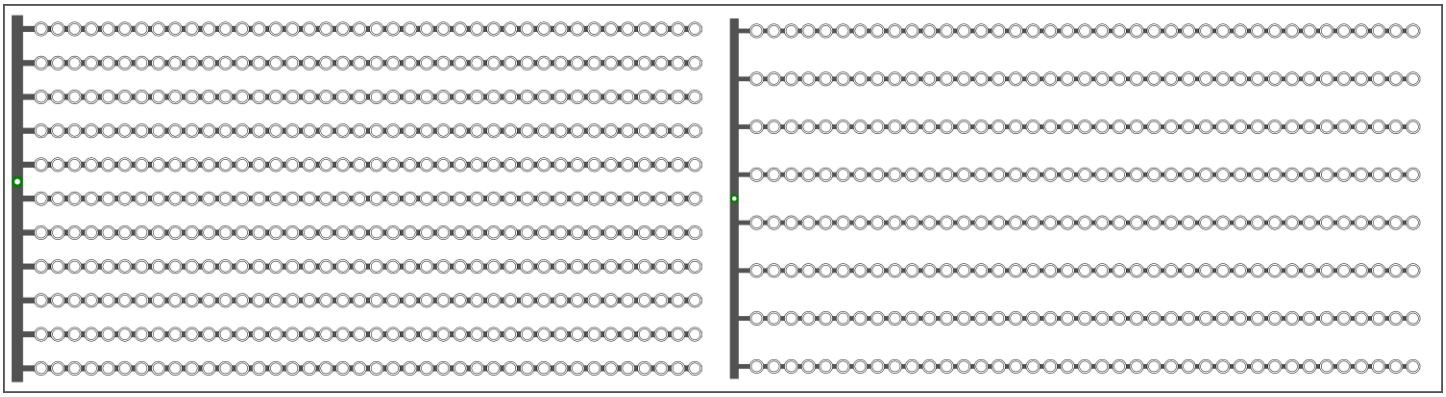

ONE (1) SHOWN THREE (3) REQUIRED

Aerobic Zone #1
24' (L) X 44'-9" (W) X 20'-6" (SWD)
11-HEADERS PER GRID @ 2'-1.35" C-C
40-DIFFUSERS PER HEADER @ 1'-0.54" C-C
440-DIFFUSERS PER GRID

Aerobic Zone #2
24' (L) X 44'-9" (W) X 20'-6" (SWD)
8-HEADERS PER GRID @ 2'-11.8" C-C
39-DIFFUSERS PER HEADER @ 1'-0.92" C-C
312-DIFFUSERS PER GRID

Note: This schematic layout is for conceptual purpose not for construction

SSI Aeration
SMART IDEAS FOR WATER

AFD270 Disc Diffuser

What Makes the a
SSI 9” AFD270 Disc Diffuser Systems
Worldwide Choice?

The SSI 9” Disc Diffuser System combines engineering excellence, superior component quality, and a technically advanced product design. Proven highly durable and efficient in thousands of municipal and industrial installations around the world, this advanced system has reliability built into every stage of performance. SSI’s AFD270 comes in several membrane materials including our patented PTFE membrane, designed to use less energy and require minimal maintenance. Industry standand size and shape are interchangable with other manufacturers. The diffuser base is molded with virgin polypropeline for extended performance, and is highly efficient with airflow performance of 1.5-2.5 SCFM.

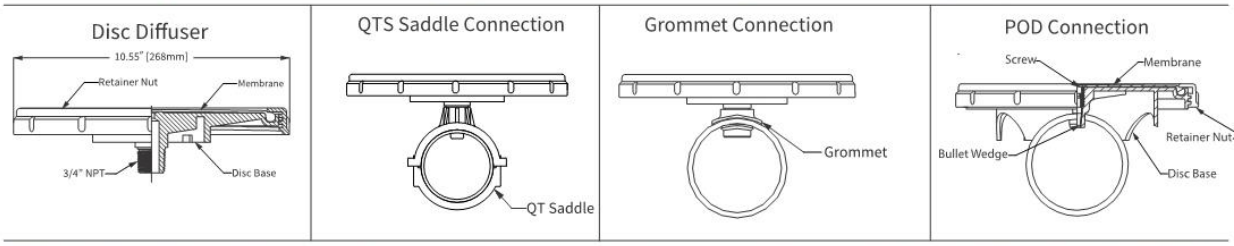



SSI Aeration
An ISO 9001:2015 Certified Company

4 Tucker Drive
Poughkeepsie, New York 12603 USA
www.stamfordscientific.com
email: info@stamfordscientific.com
tel: +1 (845) 454-8171
fax: +1 (845) 454-8094

AFD270 Disc Diffuser

Unique System Strengths

Complete product line – creating the system that fits your needs

SSI manufactures disc diffusers and coarse bubble diffusers, and we mount these products on a wide range of piping materials including PVC, CPVC, PP and Stainless Steel. We have the ability to attach diffusers to pipe using saddles, grommets, or pre-assembled PODS. We can provide retrievable systems or fixed grids, and systems in kit form or mostly factory assembled. We try to understand and anticipate your needs, and fit our recommendations to your situation.

Piping system integrity – thicker wall pipe and double anchors for fewer breakages

Our piping is 38% thicker and has double rod support stands as standard – two anchors for each support location means twice the resistance to hydraulic and thermal loads. Most often supports fail due to temperature and water velocity. SSI locates two anchors where support is needed most, helping to increase product longevity.

Comprehensive design service and after sales support

SSI provides full design services, including biological and mixing calculations, process simulations and hydraulic studies. We maintain a full drafting department with 3D and animation capabilities and we can assist with specifications and CAD drawings. Our service and installation crew can hold your hand during the early stages of the project and our worldwide multilingual staff is dedicated to your complete satisfaction.

Intelligent Upgrade Options

Patented PTFE membranes prolong efficiency and reduce whole-life costs

SSI's patented PTFE membrane barrier properties not only reduce plasticizer extraction, shrinking, and membrane hardening but also limit dynamic changes that can result from swell, such as creep. Compared with uncoated products that are more susceptible to increases in DWP due to more aggressive fouling and changes in physical properties and weight, the PTFE coated membrane improves consistency of DWP (Headloss) values over the product life. This directly impacts long-term power costs and the ability of the system to distribute air uniformly across the tank floor.

Diffuser Parts	Material
1. Retainer nut	PP
2. Membrane	EPDM / PTFE / PEEK / Silicone
3. Diffuser Base	PP

Max. Temperature resistance - 212° F / 100° C

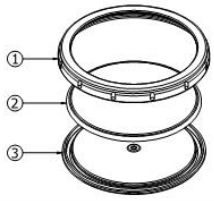

Pods Connection

Factory assembled diffusers mounted on laterals save contractors up to 30% on assembly time. PODS are a viable solution if you want to tank down for a minimum period, if your labor costs are high, or if you have a field labor shortage. For engineers unsure about the skill set of a contractor's field labor, SSI PODS are worry free with fewer field connections, and most connections created in controlled factory settings by trained personnel and automatic machines.

Grommet Connection

Simple to install on site, compact to ship and move. Affordably priced and time tested over 15 years worldwide.

Quick Threaded Saddle

QTS saddles quickly and easily bolt onto the pipe and allow installation of the diffuser with a few simple turns.

Avg Operating Condition per Diffuser	Peak Air Flow per Diffuser	Orifice Size	Slit Qty	Active Surface Area per Diffuser	Weight per Diffuser AFD270
0.45 - 2.5 SCFM 0.8 - 4.5 Sm^3/hr	4.0 SCFM 7.0 Sm^3/hr	1/4" 6mm	+/- 6600	0.41 ft^2 0.038 m^2	1.5 lbs 0.68 kg

Operating diffusers distant to average operating conditions range might leads to poor uniform distribution and subjected to rapid fouling.

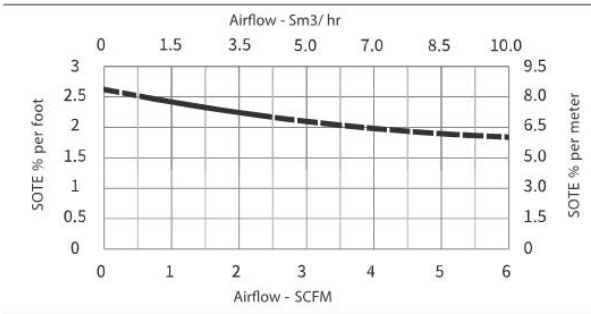

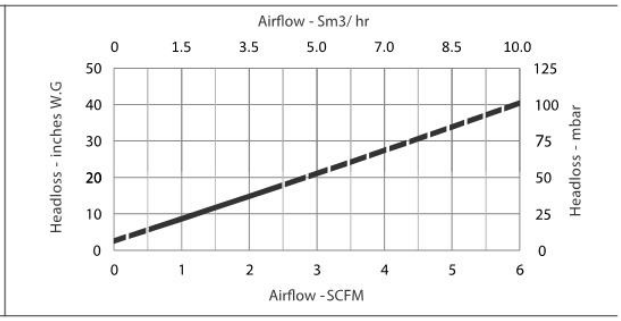

Above curves are generated based on ideal condition. Actual curves for specified project/condition to be provided upon request.

SSI
www.ssiaeration.com

SSI Aeration Inc. 4 Tucker Drive, Poughkeepsie, NY 12603 United States America.
Tel. +1 845-454-8171 Fax: +1 845-454-8094, Email: info@ssiaeration.com

TECHNICAL DATA SHEET

SSI™ ACCESSORIES

QCTS SADDLES

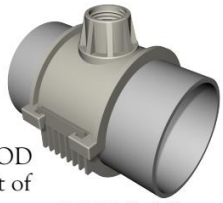

Quick Connect NPT Saddles mount on nominal US 3" or metric 88.9mm, 90mm OD, US 4" or 114.3mm and 110mm OD pipe. They allow retrofit of 12" to 9"discs without changing the piping system.

QCTS Saddle

Quick Connect NPT Saddles are made of polypropylene, and install into a 5/8" (16mm) hole. changing the piping system.

GROMMETS



Grommets are available for round plastic or square stainless steel pipes in US or Metric dimensions. Installation is simple. Multiple sizes are available based on pipe wall thickness. Grommets install into a 1-1/4" (32mm) chamfered hole.

EXPANSION JOINT OPTIONS



Rigid Bolted SS

Expansion Joints are available in three types: Flexible PVC with SS Shell, Rigid Bolted SS, and Anti-rotation, Telescoping PVC. The flexible expansion joints are recommended for disc installations and the positive locking type for tube diffuser projects.



Flexible PVC w/SS shell

Slotted band joints with stainless steel shear rings are suitable for disc-type fine bubble and cap-type coarse bubble lateral plastic piping systems, in conjunction with SSI's fixed and guide support stand system to manage thermal expansion and contraction.

Positive locking bolted stainless steel couplings are suitable for drop pipes, stainless joints, and for all tube diffuser piping systems to restrict header pipe rotation.



Anti-rotation, Telescoping PVC

SSI's Sliding Expansion Joint is an anti-rotational telescopic union which absorbs pipe expansion and contraction to up to 1.5" (38mm).

CLAMP SADDLES

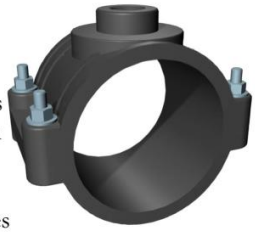

Clamp Saddles are avialable to suit different pipe sizes and its installed on 1" to 4" pipes with 5/8" (16mm) hole.Clamp Saddles are also easy to install using bolt, nuts and washers. Clamp saddles are typically made from metal or plastic. Metal clamps are more durable

BOLTED SADDLE

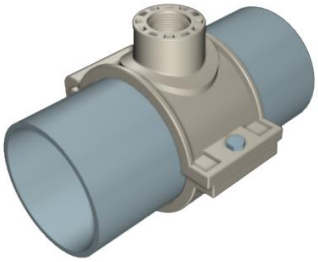

SSI manufactures nominal 2",3" and 4" Quick Bolted Saddles QTS269 for both 2.375"/60.3mm O.D pipes, QTS390 for both 3.5"/ 90mm O.D pipes and QTS4110 for 4.5"/110mm O.D pipes . Quick Threaded Bolted Saddles are made of talc-filled polypropylene, and installation into a 5/8" (16mm) hole with an O-ring (ORQTS). Easily install Quick threaded saddle on pipe using SSI's special channel-lock pliers.

Please see reverse for additional technical data

SSI Aeration
SMART IDEAS FOR WATER

SSI AERATION, INC.

+1-845-454-8171 TEL
+1-845-454-8094 FAX

4 TUCKER DRIVE
POUGHKEEPSIE, NEW YORK 12603 USA
www.ssiaeration.com
EMAIL: info@ssiaeration.com

TECHNICAL DATA SHEET

SSI™ ACCESSORIES *continued*

MOISTURE PURGE SYSTEM

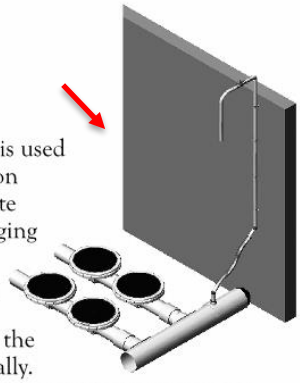

An airlift type purge system is used in all SSI fine bubble aeration systems to remove condensate from the piping system. Purging entrained water helps ensure even air distribution to all diffusers in a grid. A ball valve is supplied with the system and is opened manually. Continuous purge systems are available for retrievable-type aeration systems, or where it is not possible to fasten a purge line to a tank wall.

PRESSURE MONITORING SYSTEM

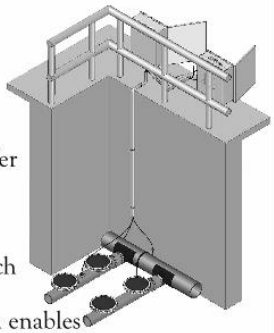

Throughout the life of an aeration system, oxygen transfer efficiency may decline somewhat when diffusers become fouled, but headloss can increase dramatically which in turn increases energy costs. A pressure monitoring system enables the operator to better determine the optimal cleaning frequency of the membranes. The fouling rate can vary by aeration zone, hence it is recommended to install at least one system in each zone.

SUPPORT STANDS

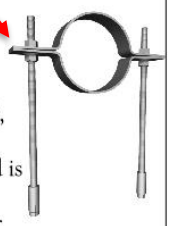

Support Stands are available in 304SS, 316SS or in ABS plastic. SSI's standard is 304SS with drop-in anchor bolts. In our aeration piping systems, support stands fulfill the dual role of anchoring pipes to the floor and controlling thermal expansion and contraction. Special support stands for uneven tank floors, for installing into concrete ballast forms, and for tanks with significant channel velocity (with lateral supports) are also available. ABS support stands are primarily used with disc diffusers and plastic pipe, where a low capital cost is the primary objective.

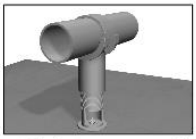

ABS plastic support stand

TELEMETRY SYSTEM

Adding a Telemetry System to your aeration system will allow you to remotely monitor factors inside your tank from any PC, tablet or mobile device. Telemetry can be installed in new systems or retrofitted through an end cap into existing systems. Telemetry sensors are available to monitor variables in your system such as temperature, vibration, humidity, water detection, DO, and other environmental factors.

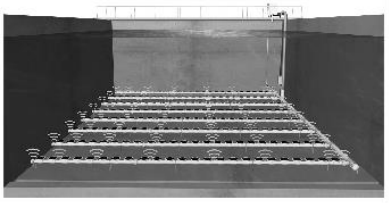

ACID DOSING SYSTEM

In-situ Acid Dosing Systems are available to control calcareous deposits in the perforations which will reduce membrane backpressure.

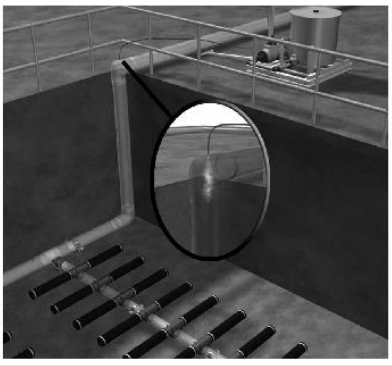

SSI Aeration
SMART IDEAS FOR WATER

SSI AERATION, INC.

+1-845-454-8171 TEL
+1-845-454-8094 FAX

4 TUCKER DRIVE
POUGHKEEPSIE, NEW YORK 12603 USA
www.ssiaeration.com
EMAIL: info@ssiaeration.com

Tags :
20-FSL-201-A/B/C/D/E
16-FSL-401-A/B/C

Thermal Air Flow Switch

measuring
•
monitoring
•
analyzing

KAL-L



- Negligible Pressure Loss
- No Moving Parts
- Adjustable Response Time
- Compensated for Temperature
- Easy to Install

KOBOLD companies worldwide:

ARGENTINA, AUSTRIA, BELGIUM, BULGARIA, CANADA, CHILE, CHINA, COLOMBIA, CZECH REPUBLIC, EGYPT, FRANCE, GERMANY, GREAT BRITAIN, HUNGARY, INDIA, INDONESIA, ITALY, MALAYSIA, MEXICO, NETHERLANDS, PERU, POLAND, ROMANIA, SINGAPORE, SOUTH KOREA, SPAIN, SWITZERLAND, TAIWAN, THAILAND, TUNISIA, TURKEY, USA, VIETNAM

KOBOLD Instruments, Inc.
1801 Parkway View Drive
Pittsburgh, PA 15205
Main Office:
1.800.998.1020
1.412.788.4890
info@koboldusa.com
www.koboldusa.com

01/05-2014

Description

The KOBOLD KAL-L flow switch allows rapid detection of flow rate changes in non-hazardous gases. Fast reaction times are guaranteed by the electronic design. Through use of two RTD's, one to sense flow and the other to detect ambient temperature, the switch can compensate for thermal changes in its surroundings. This “smart” behavior minimizes erroneous switching due to changes caused by things such as the weather. Almost any conceivable pipe size can be accommodated by the insertion style design. Knowledge of the flow velocity in your system is all that is needed to make the KAL-L work. Typical application areas include: air conditioning systems, ventilation systems, and other non-hazardous gas flow monitoring systems.



Specifications

Power Supply:	24 VAC/VDC - 15%, +10%
Max. Power:	4 VA
Ambient Temperature:	14...140 °F
Media Temperature:	-10...250 °F
Max. Pressure:	120 PSIG
Max. Warm-up Time:	30 seconds
Switching Range:	3.3...66 ft/sec at 20 °C, 14.5 PSIG (Restricted Span for other Conditions)
Switching Accuracy:	± 10% of Reading
Repeatability:	± 1% of Reading
Temperature Gradient:	30 °K (°C)/min, @ 8m/s, 90 °C
Response Time:	1...60 s, Adjustable
Flow Rate Indication:	8-Digit LED Bargraph
Switch Point Adjustment:	via Potentiometer
Output Indicator:	2-Color LED
Switch Output:	Relay, SPDT
Switch Capacity:	Max. 250 VAC / 1000 VA / 4A (Option M12: Max. 24 VAC/VDC, 3A)
Protection:	IP 65
Housing Material:	Polyamide
Sensor Material:	Ni-plated Brass

Electrical Connection

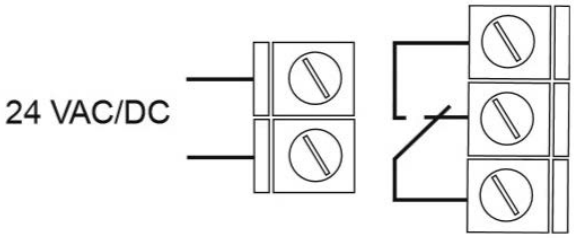

Dimensions (mm)

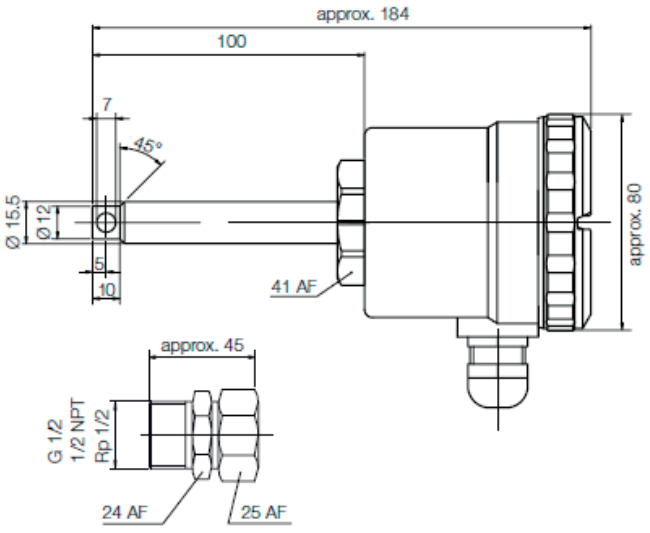

Order Details (Example: **KAL-8115 M12**)

Fitting	Order Number	Options
1/2" NPT	**KAL-8115**	**Suffix "C"** ½" Conduit Hub
2-Bolt Flange	**KAL-8115FL**	**Suffix "M12"** Quick Disconnect w/6' Cable

No responsibility taken for errors;
subject to change without prior notice.

TI00110R/09/EN/15.18
71404936
2018-05-31

TAG
20-TIT-301

Technical Information
RTD TH13, TH14 and TH15

RTD assemblies in thermowells with spring loaded insert and enclosure for process industry



Application

The TH13, TH14 and TH15 temperature sensors are RTD assemblies installed in Thermowells and designed for use in all types of process industries, including harsh environments, due to their rugged design. The sensor is made up of a measurement probe with an insulated RTD element, sheath and a thermowell made of bar-stock material.

Among other applications the sensors can be used in process industries such as:
- Chemicals & petrochemical
- Power plants
- Refineries
- Offshore platforms

Head Transmitter

All Endress+Hauser transmitters are available with enhanced accuracy and reliability compared to directly wired sensors. Instead of directly wiring your temperature sensors to your control system, use transmitters to reduce wiring and maintenance costs while increasing measurement accuracy.

Field Transmitter

Temperature field transmitters with HART® or FOUNDATION Fieldbus™ protocol for highest reliability in harsh industrial environments. Backlit display with large measured value, bargraph and fault condition indication for ease of reading.

Your benefits

- High flexibility due to modular assembly with standard terminal heads and customized immersion length
- One Source shopping for temperature measurement solutions. World class transmitter with integrated sensor offering for heavy process industry applications. - Remove and Install straight out of the box!
- Improved Galvanic Isolation on most devices (2 kV)
- Simplified Model Structure: Competitively priced, offers great value. Easy to order and reorder. A single model number includes sensor and transmitter assembly for a complete point solution
- All iTEMP transmitters provide long term stability ≤ 0.05 % per year
- Fast response time with reduced/tapered tip form

Endress+Hauser
People for Process Automation

Function and system design

Measuring principle

These resistance thermometers use a Pt100 temperature sensor according to IEC 60751. This temperature sensor is a temperature-sensitive platinum resistor with a resistance of 100 Ω at 0 °C (32 °F) and a temperature coefficient is $\alpha = 0.003851\ °C^{-1}$.

There are generally two different kinds of platinum resistance thermometers:

- **Wire wound (WW)**: Here, a double coil of fine, high-purity platinum wire is located in a ceramic support. This is then sealed top and bottom with a ceramic protective layer. Such resistance thermometers not only facilitate very reproducible measurements but also offer good long-term stability of the resistance/temperature characteristic within temperature ranges up to 600 °C (1 112 °F). This type of sensor is relatively large in size and it is comparatively sensitive to vibrations.
- **Thin film platinum resistance thermometers (TF)**: A very thin, ultrapure platinum layer, approx. 1 µm thick, is vaporized in a vacuum on a ceramic substrate and then structured photolithographically. The platinum conductor paths formed in this way create the measuring resistance. Additional covering and passivation layers are applied and reliably protect the thin platinum layer from contamination and oxidation even at high temperatures.

The primary advantages of thin-film temperature sensors over wire wound versions are their smaller sizes and better vibration resistance. A relatively low principle-based deviation of the resistance/temperature characteristic from the standard characteristic of IEC 60751 can frequently be observed among TF sensors at high temperatures. As a result, the tight limit values of tolerance category A as per IEC 60751 can only be observed with TF sensors at temperatures up to approx. 300 °C (572 °F). For this reason, thin-film sensors are generally only used for temperature measurements in ranges below 400 °C (932 °F).

Measuring system

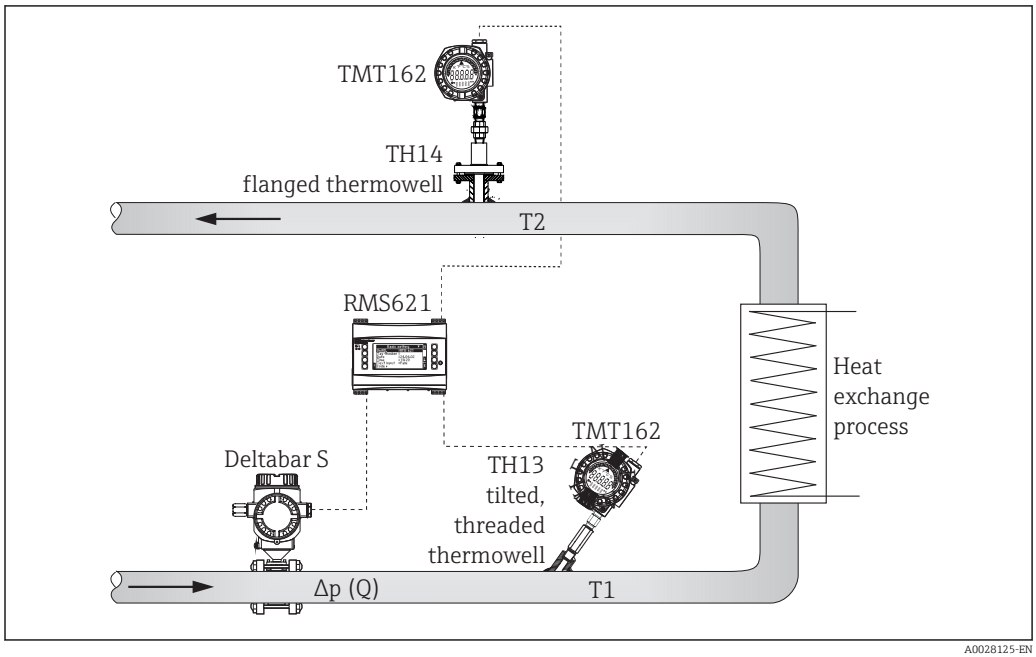

1 Example of an application of the temperature assemblies

Water - heat Differential

Calculation of heat quantity which is emitted or absorbed by a water flow in a heating or cooling system. The quantity of heat is calculated from the process variable for Dp flow (Q) and the differential from the feed and return temperature (T2 - T1). Bidirectional energy calculations, such as the calculating systems with changing flow direction (charging/discharging the heat accumulator) are also possible.

Energy manager RMS621

Energy conservation and cost expenditures are significant issues in today's industry. Accurate flow monitoring and calculation is the basis for thorough analysis and billing of energy. This data can serve as a basis to maximize savings potential and help in controlling operational costs on a daily basis. Endress+Hauser's energy managers provide accurate and reliable calculations for the

monitoring and control of energy consumption (both produced and consumed) according to international standards, e.g. IAPWS-IF 97, AGA8, ISO 5167 etc. For RMS621 details see Technical Information.

iTEMP TMT162 Temperature Field Transmitter

Aluminum or stainless steel dual compartment explosion - proof enclosure and compact, fully potted electronics provide the ultimate protection in harshest environments. TMT162 prevents costly plant shutdowns by detecting corrosion on RTDs or thermocouples before it corrupts the measured value. Endress+Hauser's Field Temperature Transmitters with backlit display and sensor backup functionality are designed with safety in mind to keep your plant, equipment and personnel safe. For TMT162 details see Technical Information.

Deltabar S/Cerabar S

The evolution series of Cerabar S/Deltabar S represents a decisive step ahead in making pressure instrumentation better and safer for the process industry. The development of new products thrives especially on the knowledge, commitment and experience of staff members. Permanent high performance can only be achieved if dedicated and enthusiastic people provide their ideas. Endress +Hauser's instruments are not only supposed to distinguish themselves for customers and users by technological novelties but also by the presence of people supporting this progress, be it in service, sales or production. For Deltabar S & Cerabar S details see Technical Information.

Equipment architecture

The single and duplex element RTDs are designed to measure temperature in a variety of process and laboratory applications. These RTDs are specifically designed for use in two different process temperature ranges and they will provide accurate and repeatable temperature measurement through a broad range of −200 to 600 °C (−328 to 1 112 °F). Low range thin film RTDs −50 to 200 °C (−58 to 392 °F) are constructed using silver plated copper internal leads, PTFE wire insulations with potting compounds to resist moisture penetration. High range RTDs −200 to 600 °C (−328 to 1 112 °F) are constructed with nickel internal leads inside swaged MgO insulated cable to allow higher temperature measurements at the RTD element and to provide higher temperature lead protection along the sheath.

Input

Measured variable

Temperature (temperature-linear transmission behavior)

Measuring range

Construction	Model code (class and type of sensor)	max. range
Low temperature range	TH13-_ _ _ _ _(A/C/E/G/J/L) _ _ _ _ _	−50 to 200 °C (−58 to 392 °F)
	TH14-_ _ _ _ _(A/C/E/G/J/L) _ _ _ _ _	
	TH15-_ _ _ (A/C/E/G/J/L) _ _ _ _ _	
High temperature range	TH13-_ _ _ _ _(B/D/F/H/K/M) _ _ _ _ _	−200 to 600 °C (−328 to 1 112 °F)
	TH14-_ _ _ _ _(B/D/F/H/K/M) _ _ _ _ _	
	TH15-_ _ _ (B/D/F/H/K/M) _ _ _ _ _ _	

Options J, K, L, M are duplex platinum elements of two sensors inside the same sheath.

Output

Output signal

Generally, the measured value can be transmitted in one of two ways:

- Directly-wired sensors - sensor measured values forwarded without a transmitter.
- Via all common protocols by selecting an appropriate Endress+Hauser iTEMP temperature transmitter. All the transmitters listed below are mounted directly in the terminal head or as field transmitter and wired with the sensory mechanism.

Family of temperature transmitters

Thermometers fitted with iTEMP transmitters are an installation-ready complete solution to improve temperature measurement by significantly increasing accuracy and reliability, when compared to direct wired sensors, as well as reducing both wiring and maintenance costs.

PC programmable head transmitters
They offer a high degree of flexibility, thereby supporting universal application with low inventory storage. The iTEMP transmitters can be configured quickly and easily at a PC. Endress+Hauser offers free configuration software which can be downloaded from the Endress+Hauser Website. More information can be found in the Technical Information.

HART® programmable head transmitters
The transmitter is a 2-wire device with one or two measuring inputs and one analog output. The device not only transfers converted signals from resistance thermometers and thermocouples, it also transfers resistance and voltage signals using HART® communication. It can be installed as an intrinsically safe apparatus in Zone 1 hazardous areas and is used for instrumentation in the terminal head (flat face) as per DIN EN 50446. Swift and easy operation, visualization and maintenance using universal device configuration tools like FieldCare, DeviceCare or FieldCommunicator 375/475. For more information, see the Technical Information.

PROFIBUS® PA head transmitters
Universally programmable head transmitter with PROFIBUS® PA communication. Conversion of various input signals into digital output signals. High accuracy over the complete ambient temperature range. The configuration of PROFIBUS PA functions and of device-specific parameters is performed via fieldbus communication. For more information, see the Technical Information.

FOUNDATION Fieldbus™ head transmitters
Universally programmable head transmitter with FOUNDATION Fieldbus™ communication. Conversion of various input signals into digital output signals. High accuracy over the complete ambient temperature range. All transmitters are released for use in all important process control systems. The integration tests are performed in Endress+Hauser's "System World". For more information, see the Technical Information.

Advantages of the iTEMP transmitters:
- Dual or single sensor input (optionally for certain transmitters)
- Pluggable display (optionally for certain transmitters)
- Unsurpassed reliability, accuracy and long-term stability in critical processes
- Mathematical functions
- Monitoring of the thermometer drift, sensor backup functionality, sensor diagnostic functions
- Sensor-transmitter matching for dual sensor input transmitters, based on Callendar/Van Dusen coefficients

Galvanic isolation

Galvanic isolation of Endress+Hauser iTEMP transmitters

Transmitter type	Sensor
TMT181 PCP	Û = 3.75 kV AC
TMT182 HART®	U = 2 kV AC
TMT162 HART® Field transmitter	U = 2 kV AC

Power supply

Terminal assignment

Type of sensor connection

Head mounted transmitter TMT18x (single input)

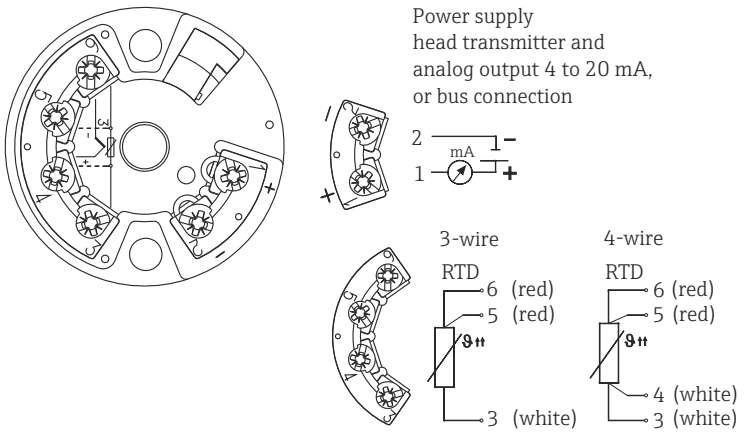

Head mounted transmitter TMT8x (dual input)

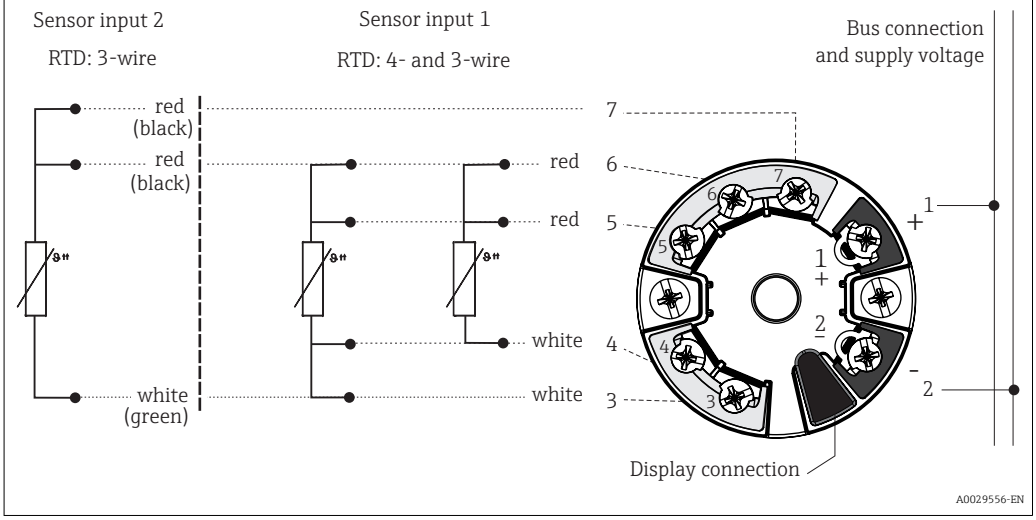

Field mounted transmitter

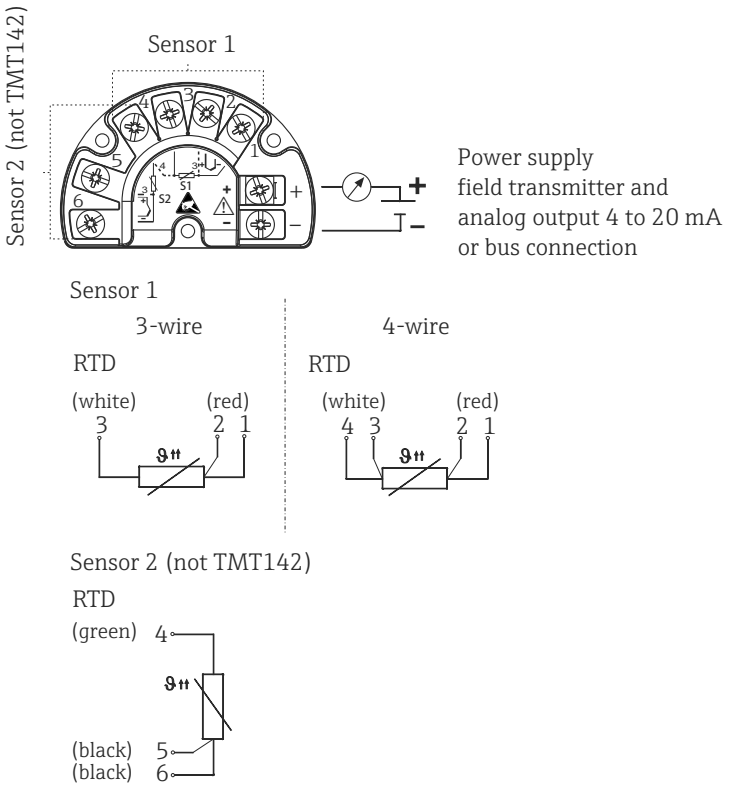

Terminal block mounted

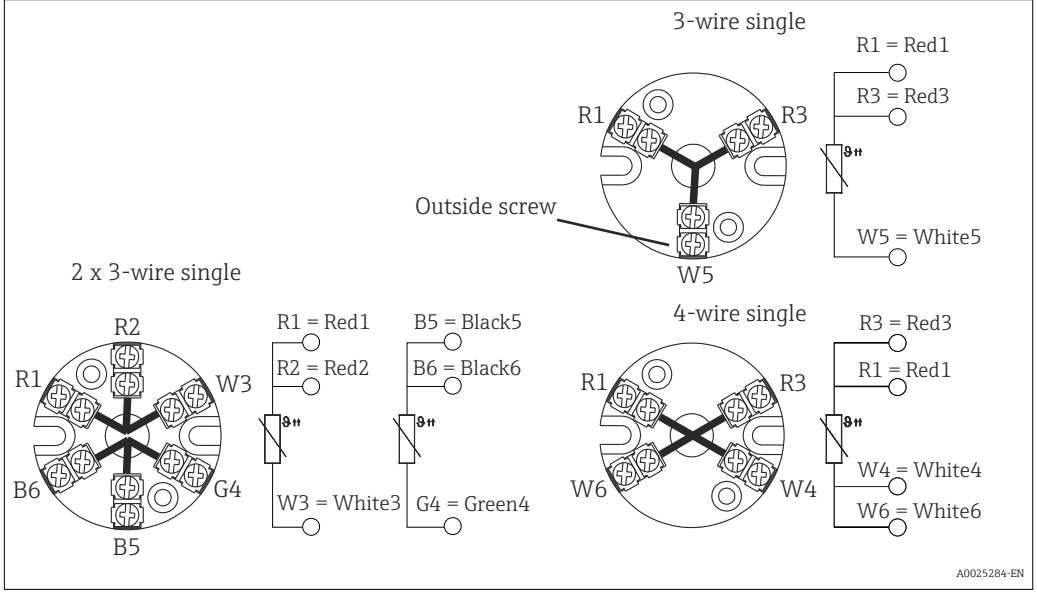

The blocks and transmitters are shown as they sit inside the heads in reference to the conduit opening.

Integrated overvoltage protection

The integrated overvoltage protection module can be ordered as an optional extra [1]. The module protects the electronics from damage from overvoltage. Overvoltage occurring in signal cables (e.g.

1) Available for the field transmitter with HART® 7 specification

4 to 20 mA, communication lines (fieldbus systems) and power supply is diverted to ground. The functionality of the transmitter is not affected as no problematic voltage drop occurs.

Connection data:

Maximum continuous voltage (rated voltage)	U_C = 42 V_{DC}
Nominal current	I = 0.5 A at $T_{amb.}$ = 80 °C (176 °F)
Surge current resistance ▪ Lightning surge current D1 (10/350 µs) ▪ Nominal discharge current C1/C2 (8/20 µs)	 ▪ I_{imp} = 1 kA (per wire) ▪ I_n = 5 kA (per wire) I_n = 10 kA (total)
Temperature range	−40 to +80 °C (−40 to +176 °F)
Series resistance per wire	1.8 Ω, tolerance ±5 %

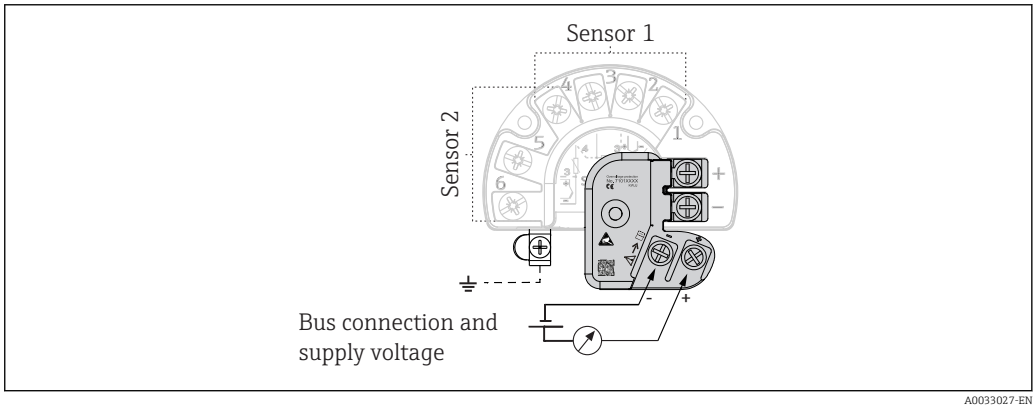

2 Electrical connection of the overvoltage protection

Grounding

The device must be connected to the potential equalization. The connection between the housing and the local ground must have a minimum cross-section of 4 mm² (13 AWG) . All ground connections must be secured tightly.

Fieldbus connector

Type (dimensions in mm (in))	Specification	
Fieldbus connector to PROFIBUS® -PA or FOUNDATION Fieldbus™ 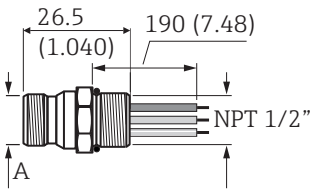 *A M12 on PROFIBUS® -PA connector or 7/8-16 UNC on FOUNDATION Fieldbus™ connector*	▪ Ambient temperature: −40 to 150 °C (−40 to 300 °F) ▪ Degree of protection IP 67 Wiring diagram: 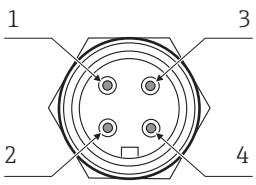 	
	PROFIBUS® -PA Pos. 1: grey (shield) Pos. 2: brown (+) Pos. 3: blue (-) Pos. 4: not connected	FOUNDATION Fieldbus™ Pos. 1: blue (-) Pos. 2: brown (+) Pos. 3: not connected Pos. 4: ground (green/yellow)

Wire specifications

24 AWG, 19 strand silver plated copper with 0.025 mm (0.010 in) PTFE extruded outer.

Electrical connection
Flying leads, standard 3" for wiring in terminal head, head mounted transmitter or terminal block mounted
Flying leads, 5½" for wiring with TMT162 or TMT142 assemblies

Design of leads	
Flying leads 3" or 5½" with brass crimped sleeves	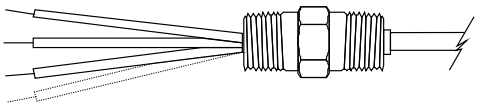 A0026119

Performance characteristics

Response time

63% response time per ASTM E644

RTD assembly TH15 without thermowell

Construction	RTD Ø ¼"
High temperature range	3 s
Low temperature range	9 s

Response time for the sensor assembly without transmitter.

Response time examples for RTD assemblies with thermowell TH13 and TH14

Construction	Stepped thermowell	Tapered thermowell	¾" straight thermowell
High temperature range	20 s	25 s	30 s
Low temperature range	25 s	30 s	35 s

Response times for RTD assemblies with thermowell are provided for general design guidance without transmitter.

When the temperature of a process media changes, the output signal of a RTD assembly follows this change after a certain time delay. The physical cause is the time related to heat transfer from the process media through the thermowell and the insert to the sensor element (RTD). The manner in which the reading follows the change in temperature of the assembly over time is referred to as the response time. Variables that influence or impact the response time are:

- Wall thickness of thermowell
- Spacing between RTD insert and thermowell
- Sensor packaging
- Process parameters such as media, flow velocity, etc.

Accuracy

RTD corresponding to IEC 60751

Class	max. Tolerances (°C)	Temperature range	Characteristics
RTD max. error type TF - range: −50 to +500 °C			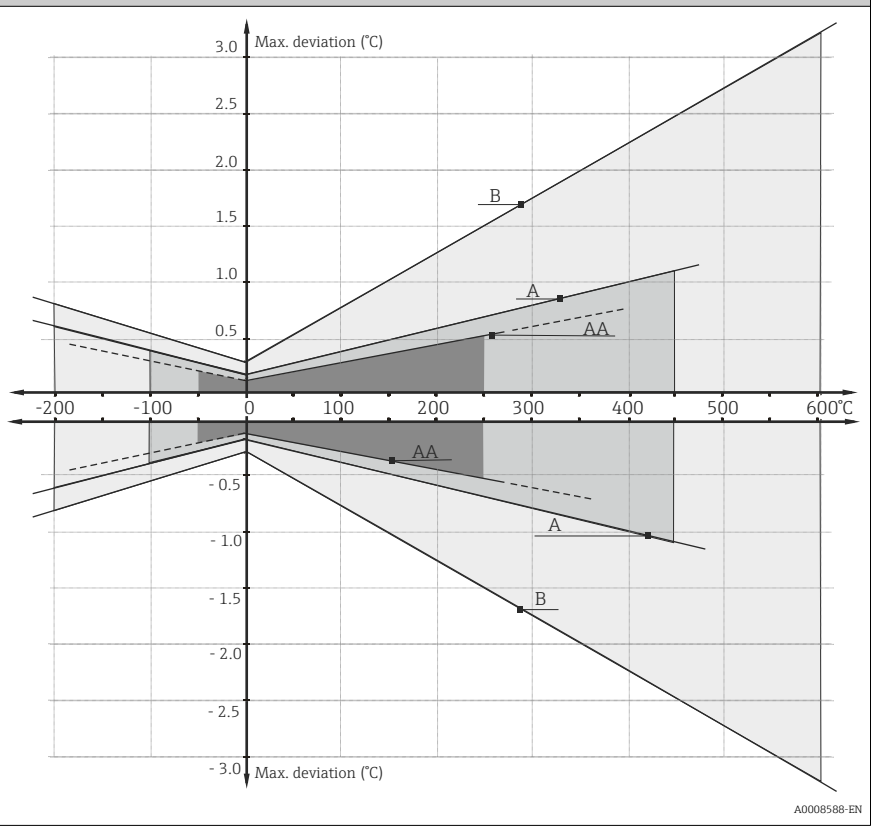
Cl. AA, former 1/3 Cl. B	± (0.1 + 0.0017 · |t| [1])	0 to +150 °C	
Cl. A	± (0.15 + 0.002 · |t| [1])	−30 to +300 °C	
Cl. B	± (0.3 + 0.005 · |t| [1])	−50 to +500 °C	
RTD max. error type WW - range: −196 to +600 °C			
Cl. AA, former 1/3 Cl. B	± (0.1 + 0.0017 · |t| [1])	−50 to +250 °C	
Cl. A	± (0.15 + 0.002 · |t| [1])	−100 to +450 °C	
Cl. B	± (0.3 + 0.005 · |t| [1])	−196 to +600 °C	

1) |t| = absolute value °C

For measurement errors in °F, calculate using equations above in °C, then multiply the outcome by 1.8.

Transmitter specifications

	TMT82 HART®/ TMT84 PA / TMT85 FF	TMT180 Pt100 PCP	TMT181 multifunctional PCP	TMT182 HART®	TMT162 HART® Field transmitter	TMT142
Measurment accuracy	± typ. 0.25 °C (0.45 °F)	0.2 °C (0.36 °F), optional 0.1 °C (0.18 °F) or 0.08% [1]	0.5 °C (0.9 °F) or 0.08% [1]		≤ 0.105 °C (0.19 °F)	0.2 °C (0.36 °F)
Sensor current	I ≤ 0.3 mA	I ≤ 0.6 mA		I ≤ 0.2 mA	I ≤ 0.3 mA	

1) % is related to the adjusted measurement range (the larger value applies)

Transmitter long-term stabiltiy

≤ 0.1 °C (0.18 °F)/year or ≤ 0.05% / year

Data under reference conditions; % relates to the set span. The larger value applies.

Insulation resistance

Insulation resistance between terminals and probe sheath, test voltage 250 V.

- ≥ 100 MΩ at 25 °C (77 °F)
- ≥ 10 MΩ at 300 °C (572 °F)

Self heating

RTD elements are not self-powered and require a small current be passed through the device to provide a voltage that can be measured. Self-heating is the rise of temperature within the element itself, caused by the current flowing through the element. This self-heating appears as a measurement error and is affected by the thermal conductivity and velocity of the process being measured; it is negligible when an Endress+Hauser iTEMP temperature transmitter is connected.

Calibration specifications

3 point sensor calibration		
−40 to 0 °C (−40 to 32 °F)	0 to 100 °C (32 to 212 °F)	40 to 215 °C (104 to 420 °F)
Minimum length requirements for calibrated sensors = 6"		

Use option "B" (Block: Test; calibration) for RTD calibration, the three temperature points need to be specified in 5 °C (9 °F) increments.

The manufacturer provides comparison temperature calibrations from −40 to +215 °C (−40 to +420 °F) on the international temperature scale of 1990. Calibrations are traceable to standards maintained by the National Institute of Standards and Technology (NIST). Calibration services are in conformance with ASTM E220, IEC 17025 and ANSI/NCSL Z540-1-1994. The report of calibration is referenced to the serial number of the RTD assembly.

Three point calibrations are provided, given that the specified temperatures are within the recommended range and the minimum length requirements are met as specified. The minimum length is based on overall length 'x' of the spring loaded insert.

Installation

Orientation

No restrictions for installation orientation.

Installation instructions

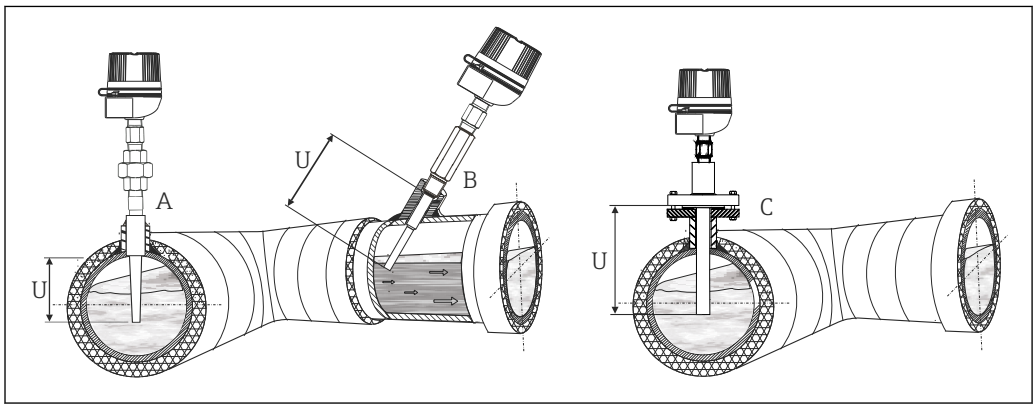

A0025312

3 Examples for pipe installation - In pipes with a small cross section the sensor tip should reach or extend slightly past the center line of the pipe (=U).

A TH13 assembly socket weld installation
B Threaded, tilted installation of TH13 assembly
C Flange installation of TH14 assembly

Immersion

Minimum immersion per ASTM E644, ΔT ≤ 0.05 °C (0.09 °F)

Immersion RTD assembly TH15 without thermowell

Construction	RTD Insert Ø ¼" Minimum Immersion (in)
High temperature range	1¼"
Low temperature range	¾"

For temperature assemblies with themowell (TH13 and TH14) the minimum immersion is the depth to which the thermowell is immersed in the medium, measured from the tip. To minimize errors from ambient temperature the following minimum immersion lengths are recommended:

Construction	Minimum Immersion (in)
Stepped thermowell	2½"
Tapered thermowell	4½"
¾" straight thermowell	4"
Weld in thermowell	4½"

Environment

Ambient temperature range

Terminal head	Temperature in °C (°F)
Without mounted head transmitter	Depends on the terminal head used and the cable gland or fieldbus connector, see 'Terminal heads' section
With mounted head transmitter	−40 to 85 °C (−40 to 185 °F) SIL mode (HART 7 transmitter): −40 to 70 °C (−40 to 158 °F)
With mounted head transmitter and display	−20 to 70 °C (−4 to 158 °F)
With mounted field transmitter	▪ Without display: −40 to 85 °C (−40 to 185 °F) ▪ With display and/or integrated overvoltage protection module: −40 to +80 °C (−40 to +176 °F) ▪ SIL mode: −40 to +75 °C (−40 to +167 °F)

Shock and vibration resistance

4 g/2 to 150 Hz as per IEC 60068-2-6

Process

Thermowells are used in measuring the temperature of a moving fluid in a conduit, where the stream exerts an appreciable force. The limiting value for the thermowells is governed by the temperature, the pressure and the speed of the medium, the immersion length, the materials of the thermowells and the medium, etc. Calculations for stress and vibration of thermowells can be done according to ASME PTC 19.3-1974 standard, please consult Endress+Hauser.

Mechanical construction

Design, dimensions

All dimensions in inches. For the values related to this graphic please refer to the tables and equations below.

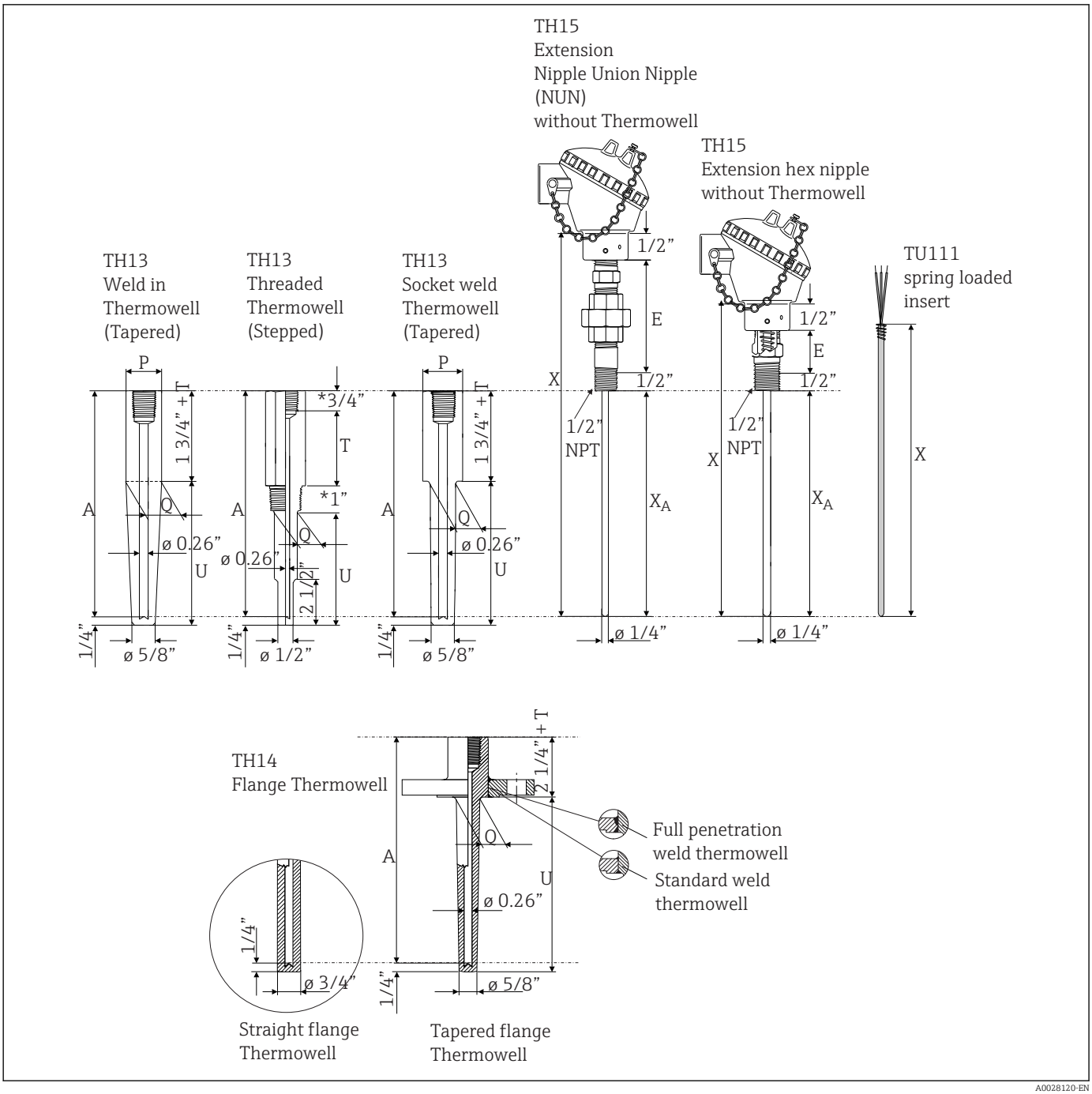

A0028120-EN

All thermowells are marked with:
- Material I.D.
- CRN# (Canadian Registration Number)
- Heat No.

Dimensions of TH13					
U	**E**	**T**	**Process connection**	**Shape of Thermowell**	**ø Q**
2½", 4½", 7½", 10½" specified length 2" to 18" in ½" increments	Hex nipple = 1" or Nipple Union Nipple (NUN) = 4" or 7" Material: Steel or 316SS	3" or specified length 1" to 6" in ½" increments	½" NPT	Stepped (Standard duty) Tapered (Heavy duty)	⅝" 11/16"
			¾" NPT	Stepped (Standard duty) Tapered (Heavy duty)	¾" ⅞"
			1" NPT	Stepped (Standard duty) Tapered (Heavy duty)	⅞" 1 1/16"

Dimensions of TH13					
U	**E**	**T**	**Process connection**	**Shape of Thermowell**	**Ø Q**
			¾" Socket weld	Stepped (Standard duty) Tapered (Heavy duty)	¾" ¾"
			1" Socket weld	Stepped (Standard duty) Tapered (Heavy duty)	⅞" 1"
			¾" weld in	Tapered (Heavy duty)	1.050"
			1" weld in	Tapered (Heavy duty)	1.315"
Immersion length RTD sensor = Thermowell drilled length X_A = A = U + 1½" + T Insert overall length X = A + E					
P = Pipe size ▪ Nom. ¾"; Dia. = 1.050" ▪ Nom. 1"; Dia. = 1.315"					

Dimensions of TH14 Flange rating: ASME B16.5				
U	**E**	**T**	**Flange size**	**Ø Q, Tapered version**
2", 4", 7", 10" specified length 2" to 18" in ½" increments	Hex nipple = 1" or Nipple Union Nipple (NUN) = 4" or 7" Material: Steel or 316SS	specified length 1" to 10" in ½" increments	1"	⅞"
			1 ½"	1 1⁄16"
			2"	1 1⁄16"
Immersion length RTD sensor - Thermowell drilled length X_A = A = U + 2" + T Insert overall length X = A + E				

Dimensions of TH15 (without thermowell)	
Immersion length RTD sensor X_A	
4", 6", 9", 12", 14" specified length 4" to 41" in ½" increments	Hex nipple = 1" or Nipple Union Nipple (NUN) = 4" or 7"

Weight

From 1 to 5.5 lbs

Material

Process connections, thermowells and enclosures.

The temperatures for continuous operation specified in the following table are only intended as reference values for use of the various materials in air and without any significant compressive load.

The maximum operation temperatures are reduced considerably in some cases where abnormal conditions such as high mechanical load occur or in aggressive media.

Material name	Short form	Recommended max. temperature for continuous use in air	Properties
AISI 316L/ 1.4404 1.4435	X2CrNiMo17-12-2 X2CrNiMo18-14-3	650 °C (1200 °F) [1]	▪ Austenitic, stainless steel ▪ High corrosion resistance in general ▪ Particularly high corrosion resistance in chlorine-based and acidic, non-oxidizing atmospheres through the addition of molybdenum (e.g. phosphoric and sulfuric acids, acetic and tartaric acids with a low concentration) ▪ Increased resistance to intergranular corrosion and pitting ▪ Compared to 1.4404, 1.4435 has even higher corrosion resistance and a lower delta ferrite content
AISI 316/1.4401	X2CrNiMo17-12-2	650 °C (1200 °F) [1]	▪ Austenitic, stainless steel ▪ High corrosion resistance in general ▪ Particularly high corrosion resistance in chlorine-based and acidic, non-oxidizing atmospheres through the addition of molybdenum (e.g. phosphoric and sulfuric acids, acetic and tartaric acids with a low concentration)

1) Can be used to a limited extent up to 800 °C (1472 °F) for low compressive loads and in non-corrosive media. Please contact your Endress+Hauser sales team for further information.

Process connection

The process connection is the means of connecting the thermometer to the process. The following process connections are available:

TH13

Thread		Version
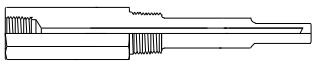 A0026110	NPT thread	NPT 1/2"
		NPT 3/4"
		NPT 1"
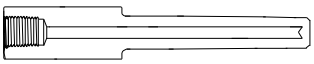 A0026111	NPS for socket weld	NPS 3/4"
		NPS 1"
 A0026108	NPS for weld-in	NPS 3/4"
		NPS 1"

TH14

Flange
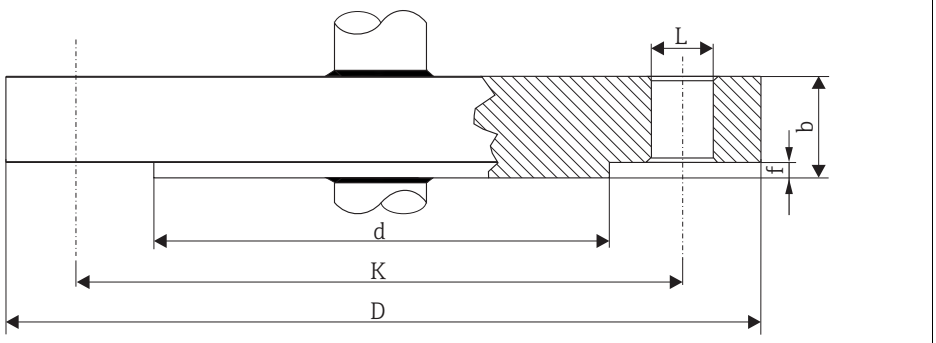
For detailed information on the flange dimensions refer to the following flange standard: ANSI/ASME B16.5
The flange material must be the same as of the stem of the thermowell.

TH15

Type		Thermowell connection	Extension neck lengths in mm (in)
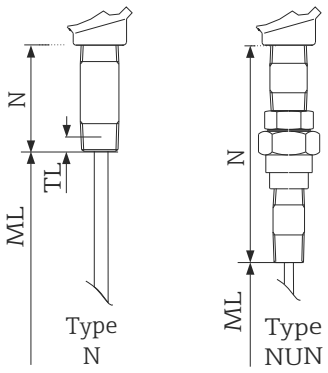	Type N	½" NPT external thread	25.4 mm (1 in)
	Type NUN	½" NPT external thread	101.6 mm (4 in) 177.8 mm (7 in)

Housing

Terminal heads

All terminal heads have an internal shape and size in accordance with DIN EN 50446, flat face and a thermometer connection with a ½" NPT thread. All dimensions in mm (in). Specifications without head transmitter installed. For ambient temperatures with head transmitter installed, see the 'Environment' section.

As a special feature, Endress+Hauser offers terminal heads with optimized terminal accessibility for easy installation and maintenance.

Some of the specifications listed below may not be available on this product line.

TA30H with display window in cover	Specification
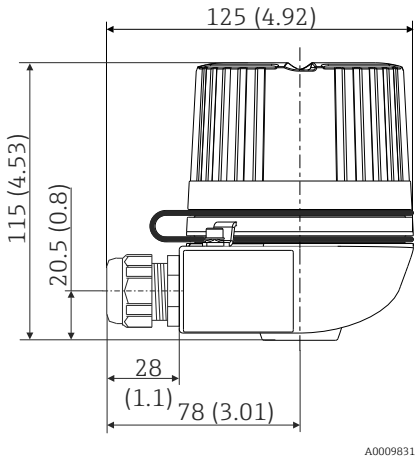	▪ Flameproof (XP) version, explosion-protected, captive screw cap, available with one or two cable entries ▪ Degree of protection: IP 66/68, NEMA Type 4x Encl. Ex-version: IP 66/67 ▪ Temperature: −50 to +150 °C (−58 to +302 °F) for rubber seal without cable gland (observe max. permitted temperature of cable gland!) ▪ Material: – Aluminum with polyester powder coating – Stainless steel 316L without coating ▪ Thread: ½" NPT, ¾" NPT, M20x1.5, G½" ▪ Extension neck/thermowell connection: ½" NPT ▪ Color of aluminum head: blue, RAL 5012 ▪ Color of aluminum cap: gray, RAL 7035 ▪ Weight: – Aluminum: approx. 860 g (30.33 oz) – Stainless steel: approx. 2 900 g (102.3 oz) ▪ Head transmitter optionally available with TID10 display

TA30R (optionally with display window in cover)	Specification
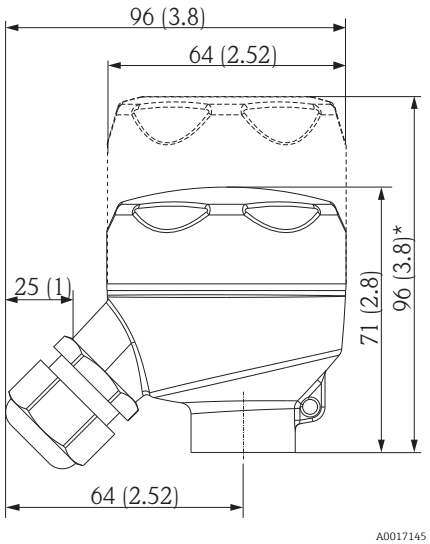 * Dimensions of version with display window in cover	▪ Degree of protection - standard version: IP69K (NEMA Type 4x encl.) Degree of protection - version with display window: IP66/68 (NEMA Type 4x encl.) ▪ Temperature: −50 to +130 °C (−58 to +266 °F) without cable gland ▪ Material: stainless steel 316L, abrasive-blasted or polished Seals: EPDM Display window: polycarbonate (PC) ▪ Cable entry thread ½" NPT and M20x1.5 ▪ Weight – Standard version: 360 g (12.7 oz) – Version with display window: 460 g (16.23 oz) ▪ Display window in cover optionally for head transmitter with display TID10 ▪ Protection armature connection: M24x1.5 or ½" NPT ▪ Ground terminal: internal in standard version; external terminal optionally available ▪ Available in conjunction with 3-A marked sensors

TU401	Specification
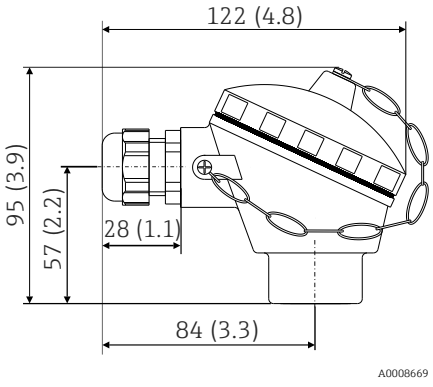	▪ Protection class: IP65 (NEMA Type 4x encl.) ▪ Temperature: −40 to 130 °C (−40 to 266 °F) silicone, up to 100 °C (212 °F) rubber seal without cable gland (observe max. permitted temperature of the cable gland!) ▪ Material: aluminum alloy with polyester or epoxy coating, rubber or silicone seal under the cover ▪ Cable entry: ½" NPT, ¾" NPT or plug 7/8" FF ▪ Protection armature connection: M24x1.5, G 1/2" or NPT 1/2" ▪ Head color: blue, RAL 5012 ▪ Cap color: gray, RAL 7035 ▪ Weight: 300 g (10.58 oz)

TU401 (TA30A style)	Specification
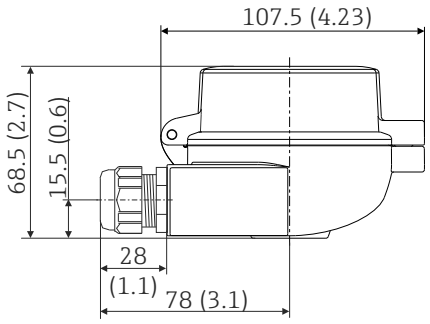	▪ Available with one or two cable entries ▪ Protection class: IP66/68 (NEMA Type 4x encl.) ▪ Temperature: −50 to +150 °C (−58 to +302 °F) without cable gland ▪ Material: aluminum, polyester powder coated Seals: silicone ▪ Threaded cable entry: ½" NPT, ¾" NPT or plug 7/8" FF ▪ Protection armature connection: M24x1.5 ▪ Head color: blue, RAL 5012 ▪ Cap color: gray, RAL 7035 ▪ Weight: 330 g (11.64 oz) ▪ Ground terminal, internal and external ▪ With 3-A symbol

TU401 (TA30S style)	Specification
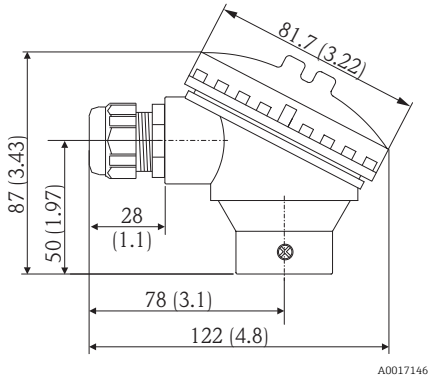	▪ Degree of protection: IP65 (NEMA Type 4x encl.) ▪ Temperature: −40 to +85 °C (−40 to +185 °F) without cable gland ▪ Material: polypropylene (PP), FDA-compliant, seals: O-ring EPDM ▪ Cable entry thread: ¾" NPT, ½" NPT) or or plug 7/8" FF ▪ Protective assembly connection: ½" NPT ▪ Color: white ▪ Weight: approx. 100 g (3.5 oz) ▪ Ground terminal: only internal via auxiliary terminal **⚠ CAUTION** **Potential electrostatic charging hazard** ► Not recommended for use in hazardous (classified) locations.

Field transmitters

Temperature field transmitter iTEMP TMT162
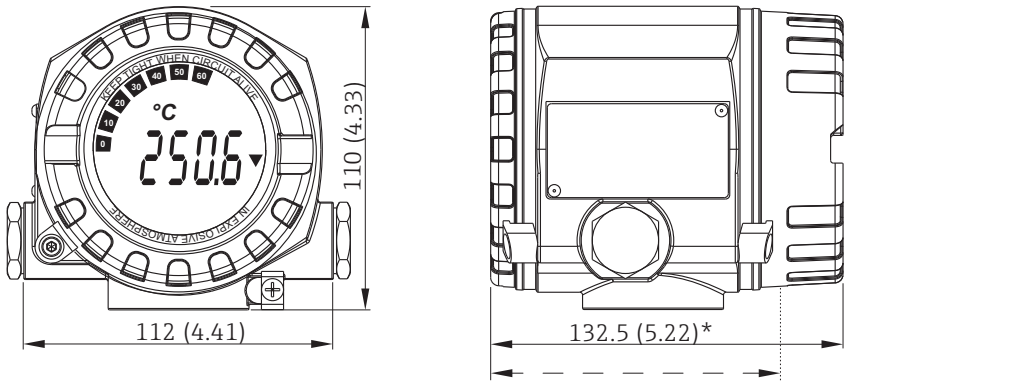 * Dimensions without display = 112 mm (4.41 in)
▪ Separate electronics compartment and connection compartment ▪ Protection class: IP67, NEMA type 4x ▪ Material: Die-cast aluminum housing AlSi10Mg with powder coating on polyester base, 316L ▪ Display rotatable in 90° increments ▪ Cable entry: 2x ½" NPT ▪ Brilliant backlit display with ease of visibility in bright sunshine or pitch darkness ▪ Gold plated terminals to avoid corrosion and additional measurement errors ▪ SIL certification as per IEC 61508:2010 (HART-protocol)

Temperature field transmitter iTEMP TMT162 for hygienic applications

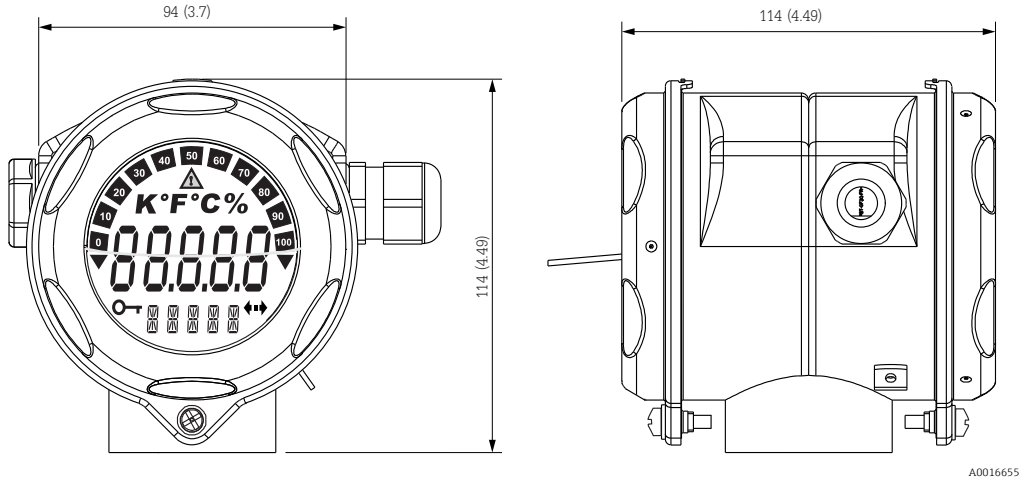

* Dimensions without display = 112 mm (4.41 in)

- Material: Stainless steel 1.4435 (AISI 316L) for hygienic applications (T17 housing)
- Separate electronics compartment and connection compartment
- Display rotatable in 90° increments
- Cable entry: 2 x ½" NPT
- Degree of protection (IP69K)
- Brilliant backlit display with ease of visibility in bright sunshine or pitch darkness
- Gold plated terminals to avoid corrosion and additional measurement errors

Temperature field transmitter iTEMP HART® TMT142

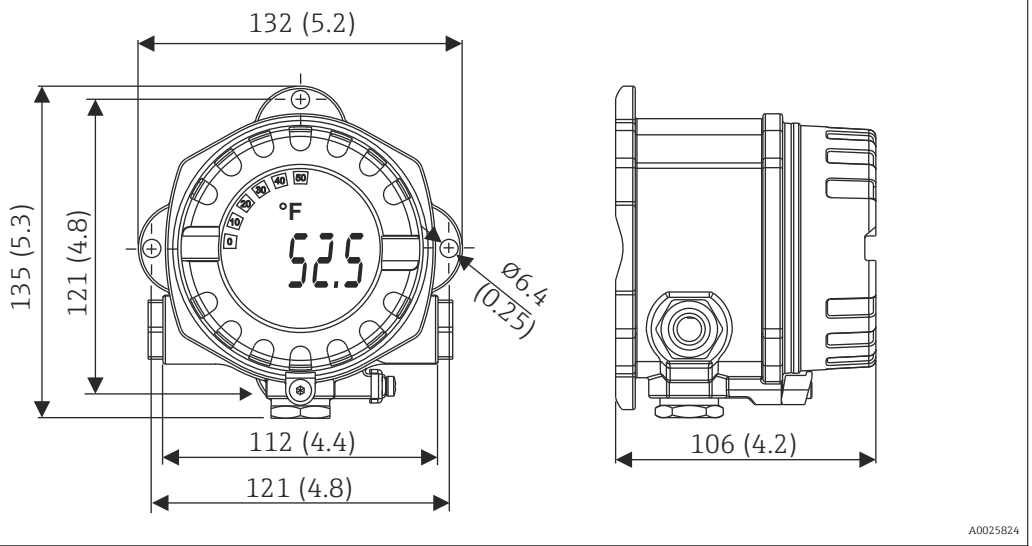

- Protection class: IP67, NEMA type 4x
- Material: Die-cast aluminum housing AlSi10Mg with powder coating on polyester base
- Display rotatable in 90° increments
- Cable entry: 3x ½" NPT
- Brilliant blue backlit display with ease of visibility in bright sunshine or pitch darkness
- Gold plated terminals to avoid corrosion and additional measurement errors

Certificates and approvals

CE mark

The measuring system meets the legal requirements of the applicable EC guidelines. These are listed in the corresponding EC Declaration of Conformity together with the standards applied. The manufacturer confirms successful testing of the device by affixing to it the CE mark.

Other standards and guidelines	▪ IEC 60529: Degree of protection of housing (IP code) ▪ IEC/EN 61010-1: Safety requirements for electrical equipment for measurement, control, and laboratory use. ▪ ASTM E644: American society for testing and materials, standard test methods for testing industrial resistance thermometers. ▪ NEMA - ANSI / NEMA 250: Standardization association for the electrical industry. ▪ IEC 60751: Industrial platinum resistance thermometer ▪ ASME PTC 19.3 - 1974: Performance test codes
CSA GP	The installed and assembled transmitters (iTEMP Series) are CSA GP approved.

Ordering information

Detailed ordering information is available from the following sources:
- In the Product Configurator on the Endress+Hauser website: www.endress.com -> Click "Corporate" -> Select your country -> Click "Products" -> Select the product using the filters and search field -> Open product page -> The "Configure" button to the right of the product image opens the Product Configurator.
- From your Endress+Hauser Sales Center: www.addresses.endress.com

Product Configurator - the tool for individual product configuration
- Up-to-the-minute configuration data
- Depending on the device: Direct input of measuring point-specific information such as measuring range or operating language
- Automatic verification of exclusion criteria
- Automatic creation of the order code and its breakdown in PDF or Excel output format
- Ability to order directly in the Endress+Hauser Online Shop

Accessories

Various accessories, which can be ordered with the device or subsequently from Endress+Hauser, are available for the device. Detailed information on the order code in question is available from your local Endress+Hauser sales center or on the product page of the Endress+Hauser website: www.endress.com.

Device-specific accessories

Adapter	M20x1.5 - ½" NPT cable entry Order code: 51004387
Cable gland	½" NPT, D4.5-8.5, IP 68 Order code: 51006845
Integrated overvoltage protection module	The module protects the electronics from overvoltage. Available for TMT162 housing (not T17 hygienic version).

Communication-specific accessories

Configuration kit TXU10	Configuration kit for PC-programmable transmitter with setup software and interface cable for PC with USB port Order code: TXU10-xx
Commubox FXA195 HART	For intrinsically safe HART communication with FieldCare via the USB interface. For details, see "Technical Information" TI00404F
Commubox FXA291	Connects Endress+Hauser field devices with a CDI interface (= Endress+Hauser Common Data Interface) and the USB port of a computer or laptop. For details, see "Technical Information" TI00405C
Wireless HART adapter SWA70	Is used for the wireless connection of field devices. The WirelessHART adapter can be easily integrated into field devices and existing infrastructures, offers data protection and transmission safety and can be operated in parallel with other wireless networks with minimum cabling complexity. For details, see Operating Instructions BA061S
Field Xpert SFX350	Field Xpert SFX350 is a mobile computer for commissioning and maintenance. It enables efficient device configuration and diagnostics for HART and FOUNDATION Fieldbus devices in the **non-Ex area**. For details, see Operating Instructions BA01202S

Field Xpert SFX370	Field Xpert SFX370 is a mobile computer for commissioning and maintenance. It enables efficient device configuration and diagnostics for HART and FOUNDATION Fieldbus devices in the **non-Ex area and the Ex area**. For details, see Operating Instructions BA01202S

Service-specific accessories

Accessories	Description
Applicator	Software for selecting and sizing Endress+Hauser measuring devices: ▪ Calculation of all the necessary data for identifying the optimum measuring device: e.g. pressure loss, accuracy or process connections. ▪ Graphic illustration of the calculation results Administration, documentation and access to all project-related data and parameters over the entire life cycle of a project. Applicator is available: ▪ Via the Internet: https://portal.endress.com/webapp/applicator ▪ On CD-ROM for local PC installation.
Configurator	Product Configurator - the tool for individual product configuration ▪ Up-to-the-minute configuration data ▪ Depending on the device: Direct input of measuring point-specific information such as measuring range or operating language ▪ Automatic verification of exclusion criteria ▪ Automatic creation of the order code and its breakdown in PDF or Excel output format ▪ Ability to order directly in the Endress+Hauser Online Shop The Configurator is available on the Endress+Hauser website: www.endress.com -> Click "Corporate" -> Select your country -> Click "Products" -> Select the product using the filters and the search field -> Open the product page -> The "Configure" button to the right of the product image opens the Product Configurator.
W@M	Life cycle management for your plant W@M supports you with a wide range of software applications over the entire process: from planning and procurement, to the installation, commissioning and operation of the measuring devices. All the relevant device information, such as the device status, spare parts and device-specific documentation, is available for every device over the entire life cycle. The application already contains the data of your Endress+Hauser device. Endress +Hauser also takes care of maintaining and updating the data records. W@M is available: ▪ Via the Internet: www.endress.com/lifecyclemanagement ▪ On CD-ROM for local PC installation.
FieldCare SFE500	FDT-based plant asset management tool from Endress+Hauser. It can configure all smart field units in your system and helps you manage them. By using the status information, it is also a simple but effective way of checking their status and condition. For details, see Operating Instructions BA00027S and BA00065S
DeviceCare SFE100	Configuration tool for devices via fieldbus protocols and Endress+Hauser service protocols. DeviceCare is the tool developed by Endress+Hauser for the configuration of Endress+Hauser devices. All smart devices in a plant can be configured via a point-to-point or point-to-bus connection. The user-friendly menus enable transparent and intuitive access to the field devices. For details, see Operating Instructions BA00027S

System components

Accessories	Description
Energy manager RMS621	Accurate and reliable calculations for the monitoring and control of energy consumption (both produced and consumed) according to international standards. For details, see the "Technical Information" document TI00092R/09/EN
Deltabar S/Cerabar S	Pressure transmitters with diaphragm seal for level measurements in gases or liquids. For details, see "Technical Information"
Process display RIA15	Process display, digital loop-powered display for 4 to 20 mA circuit, panel mounting, with optional HART® communication. Displays 4 to 20 mA or up to 4 HART® process variables For details, see "Technical Information", TI01043K/09/en
Active barrier RN221N	Active barrier with power supply for safe separation of 4 to 20 mA standard signal circuits. Has bidirectional HART® transmission and optional HART® diagnostics if transmitters are connected with monitoring of 4 to 20 mA signal or HART® status byte analysis and an E+H-specific diagnostic command. For details, see "Technical Information", TI00073R/09/en

Documentation

Brief operating instructions - RTD assembly
- TH13 with thermowell (KA00190R/09/)
- TH14 with flanged thermowell (KA00192R/09/)
- TH15 spring loaded insert (KA00195R/09/)

Technical information temperature transmitter iTEMP
- HART® TMT82 (TI01010T/09/)
- PROFIBUS PA TMT84 (TI00138R/09/)
- FOUNDATION Fieldbus™ TMT85 (TI00134R/09/)
- Field transmitter:
  - TMT162 HART® 5, PROFIBUS PA and FOUNDATION Fieldbus™ (TI00086R/09/EN)
  - TMT162 HART® 7 and SIL certification (TI01344T/09/EN)
  - TMT142 HART® (TI00107R/09/EN)
- PCP TMT181 (TI00070R/09/)
- Pt TMT180 (TI00088R/09/)
- HART® TMT182 (TI00078R/09/)

Application example - Technical information
- Energy manager RMS621 (TI00092R/09/)
- Cerabar S (TI00383P/00/)
- Deltabar S (TI00384P/00/)

www.addresses.endress.com

Endress+Hauser

People for Process Automation

Data Sheet

ASHCROFT®
Trust the shield.®

1279 Duragauge® Pressure Gauge

Tags :
20-PI-302-1/2/3/4
20-PI-301-1/2/3/4
20-PI-602
20-PI-503-1/2/3/4
20-PI-504-1/2/3/4

FEATURES

- Custom dial printing options
- Micrometer adjustable pointer
- ***PLUS!***™ Performance option dampens vibration, shock and pulsation effects
- Pressure range from vacuum to 30,000 psi

TYPICAL USES

- Refineries
- Chemical and petrochemical plants
- Offshore oil rigs
- Water and wastewater pressure control
- Pulp and water
- Mining and metals
- Equipment skids
- Specialized OEM equipment
- Cryogenics



1279
4½″ dial size

SPECIFICATIONS

Accuracy:	±0.5% of span (ASME B40.100 Grade 2A)
Size:	4½″
Range:	Vacuum, compound to 30,000 psi
Process Connection Location:	Lower, back, side, top
Process Connection:	¼ NPT, ½ NPT, 9/16-18 UNF-2B Aminco® (high pressure connection)
Case Style:	Solid front with pressure relief back
Window:	Glass (STD.), acrylic, shatter proof glass, non-glare glass (OPT.)
Movement:	Rotary, adjustable, 400 SS, Teflon™ coated
Movement Materials:	400 SS, Teflon™ coated pinion gear and segment
Dial:	Aluminum, white background, black scale
Pointer:	Micrometer, adjustable, aluminum

Weather Protection: Case	IP Rating	Ordering Code
Dry	Case not sealed, recommended for weather protected environment only	S
Dry, field fillable	IP66	SH
Liquid filled	IP66	SL

Dampening Options:	Liquid: glycerin, silicone, Halocarbon®, ***PLUS!***™ Performance
Mounting:	Stem, surface, flush (STD.), pipe, remote (OPT.)
Approvals:	CE/UKCA, CRN

WETTED COMPONENTS

Bourdon Tube	Process Connection	Joints
316L Stainless steel	316L Stainless steel	Welded
316L Stainless steel	Steel	Welded
K-Monel® 500	Monel® 400, Steel	Welded
C510 Pho. Bronze	Brass	Silver Brazed

KEY BENEFITS

- **Available with a wide variety of accessory and diaphragm seal assemblies**
- **Available with high process temperature dissipation siphons**

MIN/MAX TEMPERATURE LIMITS

Version	Ambient	Process	Storage
Dry	-20 °F to 200 °F (-29 °C to 93 °C)	-20 °F to 250 °F (-29 °C to 121 °C)	-40 °F to 250 °F (-40 °C to 121 °C)
PLUS!™	-40 °F to 150 °F (-40 °C to 66 °C)	-40 °F to 200 °F (-40 °C to 93 °C)	-40 °F to 150 °F (-40 °C to 66 °C)
Glycerin fill	20 °F to 150 °F (-7 °C to 66 °C)	20 °F to 150 °F (-7 °C to 66 °C)	0 °F to 150 °F (-18 °C to 66 °C)
Silicone fill	-40 °F to 150 °F (-40 °C to 66 °C)	-40 °F to 200 °F (-40 °C to 93 °C)	-40 °F to 150 °F (-40 °C to 66 °C)
Halocarbon® fill	-40 °F to 150 °F (-40 °C to 66°C)	-40 °F to 200 °F (-40 °C to 93 °C)	-40 °F to 150 °F (-40 °C to 66 °C)

NON-WETTED COMPONENTS

Case	Ring	Pressure Relief Back
Phenolic	Threaded, Polycarbonate (meets UL 94 V-0)	Polycarbonate (Meets UL 94 V-0)

Note: Other than discoloration of the dial and hardening of the gasketing that may occur as ambient or process temperatures exceeds 150 °F, non-liquid-filled gauges with standard glass windows, can withstand continuous operating temperatures up to 250 °F (121 °C). Liquid-filled gauges can withstand 200 °F (93 °C) but glycerin fill and acrylic window will tend to yellow. Accuracy at temperatures above or below the reference ambient temperature of 68 °F (20 °C) will be affected by approximately .4% per 25 °F. Gauges with welded joints will withstand 750 °F (400 °C), 450 °F (232 °C) with silver brazed joints for short times without rupture, although other parts of the gauge will be destroyed and calibration will be lost. For continuous use and for process or ambient temperatures above 250 °F (121 °C), a diaphragm seal or capillary or siphon is recommended.

All specifications are subject to change without notice. All sales subject to standard terms and conditions. Ashcroft®, Duragauge®, DuraVis™, Plus!™, Trust the Shield® are trademarks and Gold Service℠ is a service mark of Ashcroft Inc. The following non-Ashcroft trademarks are the property of their respective owners: Aminco®, Halocarbon®, Monel®, Teflon™. For more information, see Ashcroft Brands & Trademarks
©2023 Ashcroft Inc. 1279_gauge_ds_RevN_07-12-23

ASHCROFT®
Trust the shield.®

1279 Duragauge® Pressure Gauge

ORDERING CODE Example:	451279	S	SH	04	L	XLL	15#
Dial Size/Model Code							
451279 - 4½″ solid front	451279						
System (tube and process connection)							
A - Bronze tube, brass process connection, Max. pressure connection 1,000 psi							
P - K-Monel® 500 tube, Monel® 400 process connection, Max. pressure 30,000 psi							
R - 316L SS tube, steel process connection, Max. pressure 20,000 psi							
S - 316 SS tube, 316L SS process connection, Max. pressure 20,000 psi		S					
Case Design							
S - Solid front case, dry							
SH - Solid front case, dry (IP66 NEMA 4X)			SH				
SL - Solid front case, liquid filled (glycerin STD.)							
Process Connection Sizes							
02 - ¼ NPT Male, N/A for ranges over 20,000 psi							
04 - ½ NPT Male, N/A for ranges over 20,000 psi				04			
09 - 9/16 18 UNF-2B, Aminco® high pressure fitting, pressures over 20,000 psi (STD.)							
AM - AND 10050-4 (¼ tubing connection)							
RW - SAE 7/16 & 20 Straight thread							
Process Connection Location							
L - Lower					L		
B - Back							
D - Side (3 o'clock)							
E - Side connection (9 o'clock)							
T - Top connection							
Options (If choosing an option(s) must include a "X") (See Table 1 on page 3 for more options)						–X__	
GV - Silicone case fill							
GX - Halocarbon® case fill							
LL - ***PLUS!***™ Performance						LL	
ND - PLUS! Performance, silicone free (glycerin and silicone filled gauges)							
NZ - ***PLUS!***™ Performance, silicone free dry gauges							
X1P - IP65 dry case (case cannot by liquid filled)							
NH - SS tag wired to case							
PD - Acrylic window (STD. with liquid filled or hermetically sealed cases)							
SG - Safety Glass							
C4 - Traceable calibration certificate							
6B - Cleaned for oxygen service							
5G - Attach one accessory to gauge. Applicable to PL02 pressure limiting valve, V01,V02,V03 valves, 1098, 1100, 1198, 2198 siphons, 7001, 7004 needle valves, 1115 capillary, 1106 pulsation dampner, 1112, PD02 pressure snubbers, MDV swivel adapter, 2265 electric warning contact							
Range (coding examples only, see range table on page 3 for all standard ranges)							
Single Scales							
15# - 15 psi							15#
1BR - 1 bar							
1KSC - 1 kg/cm²							
100KP - 100 kPa							
Dual Scales							
15#/BR - 15 psi inner scale, 1 bar outer scale							
1BR/# - 1 bar inner scale, 15 psi outer scale							

When selecting a diaphragm seal or isolation ring, refer to the Min/Max Guide for compatibility with this gauge or scan the QR code to the right.

All specifications are subject to change without notice. All sales subject to standard terms and conditions. Ashcroft®, Duragauge®, DuraVis™, Plus!™, Trust the Shield® are trademarks and Gold Service℠ is a service mark of Ashcroft Inc. The following non-Ashcroft trademarks are the property of their respective owners: Aminco®, Halocarbon®, Monel®, Teflon™. For more information, see Ashcroft Brands & Trademarks
©2023 Ashcroft Inc. 1279_gauge_ds_RevN_07-12-23

ASHCROFT®
Trust the shield.®

1279 Duragauge® Pressure Gauge

TABLE 1

CODE	OPTION
AB	Gauges calibrated to compensate for absolute pressure
DA	Dial marking (text marking on the dial)
EP	Maximum pointer (adjustable, N/A with liquid filled or hermetically sealed cases)
HY	Hydrostatic/pneumatic testing (system pressurized to 150% of rated system pressure for 5 minutes. Overload stop STD.)
NG	Non-glare glass (N/A with liquid fill or hermetically sealed cases)
OS	Overload stop
SH	Red set hand, stationary
SG	Safety glass
TS	Throttle screw (STD. with liquid filled, hermetically sealed or ***PLUS!***™ Performance)
VS	Underload stop
56	Flush mounting ring
D3	DuraVis™ retroreflective dial
TM	2″ Pipe mounting bracket
1P	IP 65 Rating (dry gauge only; lower connect only)

STANDARD PRESSURE RANGES

	psi	bar	kPa	mPa	KG (kg/cm²)
Vacuum	30IMV	N1BR	N100KP	N1MP	N1KSC
	–	N1/0.6BR	N100/60KP	0.1/0.06MP	N1/0.6KSC
Compound	V/15#	–	–	–	–
	–	N1/1.5BR	N100/150KP	N0.1/0.15MP	N1/1.5KSC
	V/30#	–	–	–	–
	–	N1/3BR	N100/300KP	N0.1/0.3MP	N1/3KSC
	V/60#	–	–	–	–
	–	N1/5BR	N100/500KP	N0.1/0.5MP	N1/5KSC
	V/100#	–	–	–	–
	–	N1/9BR	N100/900KP	N0.1/0.9MP	N1/9KSC
Positive Pressure	15#	1BR	100KP	0.1MP	1KSC
	20#	–	–	–	–
	–	1.6BR	160KP	0.16MP	1.6KSC
	30#	–	–	–	–
	–	2.5BR	250KP	0.25MP	2.5KSC
	60#	4BR	400KP	0.4MP	4KSC
	–	6BR	600KP	0.6MP	6KSC
	100#	–	–	–	–
	120#	–	–	–	–
	–	10BR	1000KP	1MP	10KSC
	160#	–	–	–	–
	200#	–	–	–	–
	–	16BR	1600KP	1.6MP	16KSC
	300#	–	–	–	–
	–	25BR	2500KP	2.5MP	25KG
	400#	–	–	–	–
	500#	–	–	–	–
	600#	40BR	4000KP	4MP	40KSC
	800#	–	–	–	–
	–	60BR	6000KP	6MP	60KSC
	1000#	–	–	–	–
	1500#	100BR	10000KP	10MP	100KG
	2000#	–	–	–	–
	–	160BR	16000KP	16MP	160KSC
	3000#	–	–	–	–
	–	250BR	25000KP	25MP	250KSC
	4000#	–	–	–	–
	5000#	–	–	–	–
	6000#	400BR	40000KP	40MP	400KSC
	8000#	–	–	–	–
	–	600BR	60000KP	60MP	600KSC
	10000#	–	–	–	–
	15000#	1000BR	100000KP	100MP	1000KSC
	20000#	-	-	-	-
	-	1600BR	-	160MP	1600KSC
	30000#	-	-	-	-

All specifications are subject to change without notice. All sales subject to standard terms and conditions. Ashcroft®, Duragauge®, DuraVis™, Plus!™, Trust the Shield® are trademarks and Gold Service℠ is a service mark of Ashcroft Inc. The following non-Ashcroft trademarks are the property of their respective owners: Aminco®, Halocarbon®, Monel®, Teflon™. For more information, see Ashcroft Brands & Trademarks
©2023 Ashcroft Inc. 1279_gauge_ds_RevN_07-12-23

1279 Duragauge® Pressure Gauge

DIMENSIONS in [ ] are millimeters

For reference only, consult Ashcroft for specific dimensional drawings

Dial Size Inches	A	B	C	D	E	F	G	H	J	K	L	T	V	Weight oz/kg
4½	5.81 [147.6]	3.36 [85.3]	5.07 [128.7]	1.60 [40.6]	5.375 [137]	1.62 [41.2]	3.92 [99.6]	0.73 [18.4]	0.94 [23.9]	2.62 [66.7]	0.218 [5.5]	0.62 [15.7]	2.62 [66.7]	2.5 (Dry) 3.5 (L.F.)

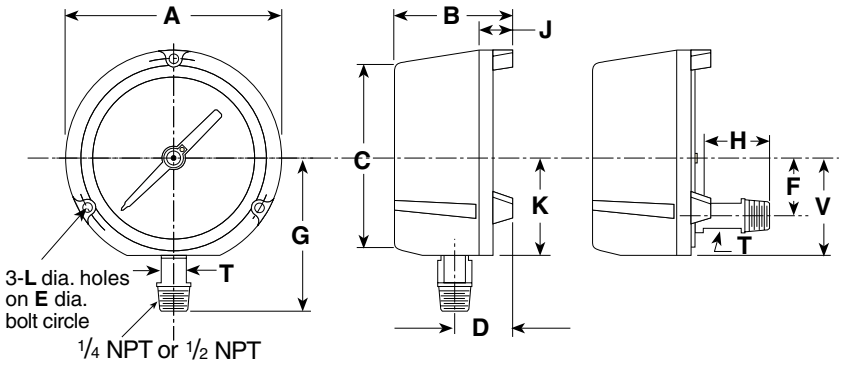

1278M Series Flush Mounting Ring

1278M Series Flush Mounting Ring. Used to flush mount gauge case 1279(*)S. Black finish (STD.); Polished SS finish (OPT.)

Gauge Size Inches	Ring O.D.	"A" DIA.	"B" Size of 3 Screws	"C" Size of Washers
4½	6 [152]	5.625 [148]	#10-24 x 1⅝	7/16 x 17/64 x 5/8

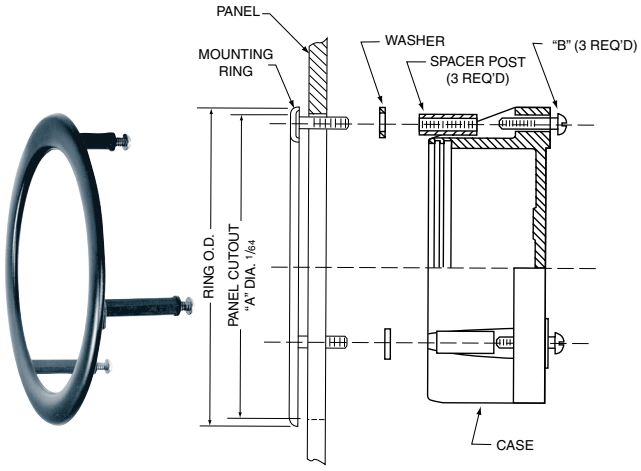

All specifications are subject to change without notice. All sales subject to standard terms and conditions. Ashcroft®, Duragauge®, DuraVis™, Plus!™, Trust the Shield® are trademarks and Gold Service℠ is a service mark of Ashcroft Inc. The following non-Ashcroft trademarks are the property of their respective owners: Aminco®, Halocarbon®, Monel®, Teflon™. For more information, see Ashcroft Brands & Trademarks
©2023 Ashcroft Inc. 1279_gauge_ds_RevN_07-12-23

TAG:20-PIT-301-1/2/3/4

Technical Information
Cerabar S
PMC71, PMP71, PMP75

Process pressure measurement



Pressure transmitter with ceramic and metal sensors

Applications

The device is used for the following measuring tasks:
- Absolute pressure and gauge pressure measurement in gases, steams or liquids in all areas of process engineering and process measurement technology
- Level, volume or mass measurements in liquids
- High process temperatures
  - up to 150 °C (302 °F)without diaphragm seal
  - up to 400 °C (752 °F)with typical diaphragm seals
- High pressures up to 700 bar (10 500 psi)
- MID part certificate according to OIML R117-1 Edition 2007 (E) and EN 12405-1/A1 Edition 2006
- Low-energy version with voltage output (1-5V DC), e.g. for operation on solar-operated control units (Remote Terminal Unit (RTU))

Your benefits

- Very good reproducibility and long-term stability
- High reference accuracy up to ±0.025 %
- Turn down up to 100:1, higher on request
- Used for process pressure monitoring up to SIL 3, certified to IEC 61508 by TÜV SÜD
- High level of safety during operation thanks to function monitoring from the measuring cell to the electronics
- The patented TempC membrane for the diaphragm seal reduces measured errors caused by environmental and process temperature influences to a minimum
- Easy electronic replacement guaranteed with HistoROM®/M-DAT
- Uniform platform for differential pressure, hydrostatics and pressure (Deltabar S – Deltapilot S – Cerabar S)
- Practical user navigation for quick and easy commissioning
- Extensive diagnostic functions

Endress+Hauser
People for Process Automation

Table of contents

Document information 4
Document function 4
Symbols used 4
Documentation 5
Terms and abbreviations 6
Turn down calculation 7
Registered trademarks 7

Function and system design 8
Device selection 8
Measuring principle 10
Product design 11
Applications suitable for custody transfer measurement . . . 12
Communication protocol 12

Input 13
Measured variable 13
Measuring range 13

Output 16
Output Signal 16
Signal range 16
Signal on alarm 16
Load 17
Dead time, time constant 17
Dynamic behavior, current output 18
Dynamic behavior Digital output (HART electronics) 18
Dynamic behavior 1-5V DC 18
Dynamic behavior PROFIBUS PA 19
Dynamic behavior FOUNDATION Fieldbus 19
Damping 20
Alarm current 20
Firmware version 20
HART protocol-specific data 20
PROFIBUS PA protocol-specific data 21
FOUNDATION Fieldbus protocol-specific data 21

Power supply 24
Terminal assignment 24
Supply voltage 25
Current consumption 26
Electrical connection 26
Terminals 26
Cable entries 26
Device plug 26
Cable specification 28
Start-up current 28
Residual ripple 28
Overvoltage protection (optionally for HART, PROFIBUS PA and FOUNDATION Fieldbus) 29
Influence of power supply 29

Performance characteristics of PMP71/PMP75 metal pressure transmitter (Sensor module + Electronic module) 30
Preamble 30
Total performance of transmitter 30
Reference accuracy [E1] 30
Total performance – Specification values 31
Long-term stability 31
Detailed Performance Explanation and Calculation 32
Total error 33

Performance characteristics of PMC71 ceramic pressure transmitter (Sensor module + Electronic module) 34
Preamble 34
Total performance of transmitter 34
Reference accuracy [E1] 34
Total performance – Specification values 35
Long-term stability 35
Detailed Performance Explanation and Calculation 36
Total error 38

Performance characteristics - calculation example and additional information 39
Calculating the total performance in 4 steps 39
Installation factors 42
Reference operating conditions 42

Installation 43
General installation instructions 43
Measuring arrangement for devices without diaphragm seals – PMC71, PMP71 43
Measuring arrangement for devices with diaphragm seals – PMP75 43
Orientation 43
Wall and pipe mounting, transmitter (optional) 44
Wall and pipe mounting, valve manifold (optional) 44
Heat insulation – PMC71 high-temperature version 44
Mounting of PVDF screw-in fittings 45
"Separate housing" version 46
Turning the housing 47
Oxygen applications 48
PWIS-free applications 48
Ultrapure gas applications 48
Applications with hydrogen 48

Environment 49
Ambient temperature range 49
Storage temperature range 49
Degree of protection 49
Climate class 49
Electromagnetic compatibility 49
Vibration resistance 50

Process 51
Process temperature limits 51
Process temperature limits of capillary armoring: PMP75 . . 52
Pressure specifications 53

Mechanical construction 54
Device height 54
T14 housing, optional display on the side 55

T17 housing (hygienic), optional display on the side 56
Process connections for PMC71 with internal process isolating diaphragm 57
Process connections for PMC71 with internal process isolating diaphragm 59
Process connections for PMC71 with internal process isolating diaphragm - height H 59
Process connections for PMC71 with flush-mounted process isolating diaphragm 60
Process connections for PMC71 with flush-mounted process isolating diaphragm 61
Process connections for PMC71 with flush-mounted process isolating diaphragm - height H 61
Process connections for PMC71 with flush-mounted process isolating diaphragm 62
Hygienic process connections for PMC71 with flush-mounted process isolating diaphragm 65
Process connections for PMP71 with internal process isolating diaphragm 67
Process connections for PMP71 with internal process isolating diaphragm 68
Process connections for PMP71 with internal process isolating diaphragm 69
Process connections for PMP71 with flush-mounted process isolating diaphragm 70
Process connections for PMP71 with flush-mounted process isolating diaphragm 72
Process connections for PMP71 with flush-mounted process isolating diaphragm 73
Process connections for PMP71 with flush-mounted process isolating diaphragm 74
Process connections for PMP71 with flush-mounted process isolating diaphragm 75
Process connections for PMP71 76
Process connections for PMP71 76
Valve manifold DA63M- (optional) 77
PMP75 basic device 78
Process connections for PMP75 with flush-mounted process isolating diaphragm 79
Process connections for PMP75 with flush-mounted process isolating diaphragm 80
Process connections for PMP75 with flush-mounted process isolating diaphragm 81
Process connections for PMP75 with flush-mounted process isolating diaphragm 82
Hygienic process connections for PMP75 with flush-mounted process isolating diaphragm 83
Hygienic process connections for PMP75 with flush-mounted process isolating diaphragm 84
Hygienic process connections for PMP75 with flush-mounted process isolating diaphragm 86
Process connections for PMP75 with flush-mounted process isolating diaphragm 89
Process connections for PMP75 with flush-mounted process isolating diaphragm 91
Process connections for PMP75 94
Separate housing: Wall and pipe mounting with mounting bracket 97
Materials not in contact with process 98
Weight 101
Materials in contact with process 101
Fill fluid 103

Operability 104
Operating concept 104
Local operation 104
Remote operation 107
HistoROM®/M-DAT (optional) 109
System integration 109

Planning instructions, diaphragm seal systems . . 110
Applications 110
Design and operation mode 111
Diaphragm seal filling oils 113
Information on cleaning 113
Installation instructions 113
Vacuum applications 116

Certificates and approvals 117
CE mark 117
RoHS 117
RCM-Tick marking 117
Ex approvals 117
EAC conformity 117
Suitable for hygiene applications 117
Functional safety SIL/ IEC 61508 Declaration of Conformity (optional) 118
Overfill protection 118
CRN approval 118
Other standards and guidelines 118
Pressure Equipment Directive 2014/68/EU (PED) 119
Manufacturer declarations 120
Marine approval 120
Drinking water approval 120
Approvals for custody transfer 120
MID Parts Certificate 120
Classification of process sealing between electrical systems and (flammable or combustible) process fluids in accordance with ANSI/ISA 12.27.01 120
Inspection certificate 121
Calibration 121
Service 122

Ordering information 123
Scope of delivery 123
Measuring point (TAG) 123
Configuration data sheet 124

Accessories 126
HistoROM®/M-DAT 126
Welding flanges and welding neck 126
Manifolds 126
Additional mechanical accessories 126

Supplementary documentation 127
Field of Activities 127
Technical Information 127
Special Documentation 127
Operating Instructions 127
Brief Operating Instructions 127
Functional safety manual (SIL) 127
Overfill protection 127
Safety Instructions (XA) 127
Installation/Control Drawings 129

Document information

Document function

The document contains all the technical data on the device and provides an overview of the accessories and other products that can be ordered for the device.

Symbols used

Safety symbols

Symbol	Meaning
DANGER	**DANGER!** This symbol alerts you to a dangerous situation. Failure to avoid this situation will result in serious or fatal injury.
WARNING	**WARNING!** This symbol alerts you to a dangerous situation. Failure to avoid this situation can result in serious or fatal injury.
CAUTION	**CAUTION!** This symbol alerts you to a dangerous situation. Failure to avoid this situation can result in minor or medium injury.
NOTICE	**NOTE!** This symbol contains information on procedures and other facts which do not result in personal injury.

Electrical symbols

Symbol	Meaning	Symbol	Meaning
	**Protective ground connection** A terminal which must be connected to ground prior to establishing any other connections.		**Ground connection** A grounded terminal which, as far as the operator is concerned, is grounded via a grounding system.

Symbols for certain types of information

Symbol	Meaning
	**Permitted** Procedures, processes or actions that are permitted.
	**Preferred** Procedures, processes or actions that are preferred.
	**Forbidden** Procedures, processes or actions that are forbidden.
	**Tip** Indicates additional information.
	Reference to documentation
	Reference to page
	Reference to graphic
	Visual inspection

Symbols in graphics

Symbol	Meaning
1, 2, 3 ...	Item numbers
1. , 2. , 3. ...	Series of steps
A, B, C, ...	Views
A-A, B-B, C-C, ...	Sections

Documentation

See chapter "Additional documentation" → 127

The document types listed are available:
In the Download Area of the Endress+Hauser Internet site: www.endress.com → Download

Safety Instructions (XA)

See the "Safety instructions" section → 127

Terms and abbreviations

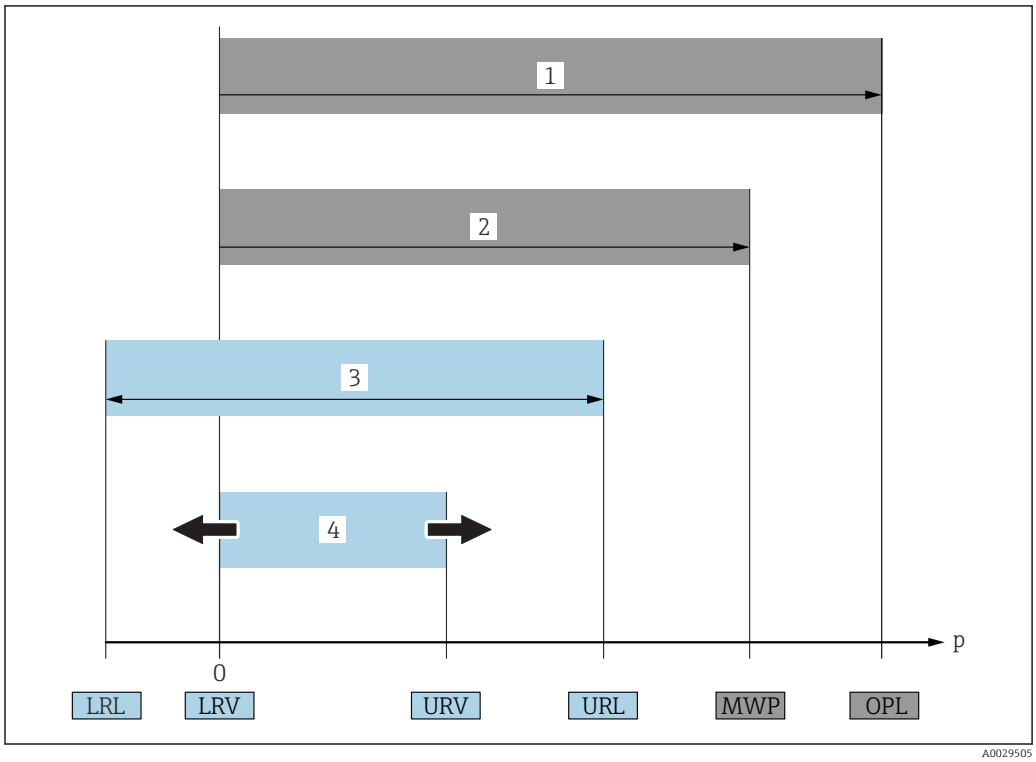

Item	Term/abbreviation	Explanation
1	OPL	The OPL (over pressure limit = sensor overload limit) for the measuring device depends on the lowest-rated element, with regard to pressure, of the selected components, i.e. the process connection has to be taken into consideration in addition to the measuring cell. Also observe pressure-temperature dependency. For the relevant standards and additional information, see the "Pressure specifications"→ 🖹 53 section. The OPL may only be applied for a limited period of time.
2	MWP	The MWP (maximum working pressure) for the sensors depends on the lowest-rated element, with regard to pressure, of the selected components, i.e. the process connection has to be taken into consideration in addition to the measuring cell. Also observe pressure-temperature dependency. For the relevant standards and additional information, see the "Pressure specifications"→ 🖹 53 section. The MWP may be applied at the device for an unlimited period. The MWP can also be found on the nameplate.
3	Maximum sensor measuring range	Span between LRL and URL This sensor measuring range is equivalent to the maximum calibratable/adjustable span.
4	Calibrated/adjusted span	Span between LRV and URV Factory setting: 0 to URL Other calibrated spans can be ordered as customized spans.
p	-	Pressure
-	LRL	Lower range limit
-	URL	Upper range limit
-	LRV	Lower range value
-	URV	Upper range value
-	TD (turn down)	Turn down Example - see the following section.

Turn down calculation

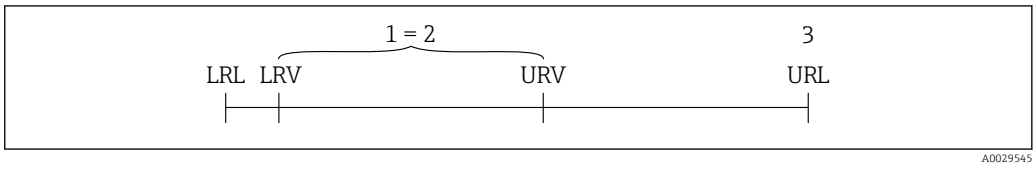

1 Calibrated/adjusted span
2 Zero point-based span
3 URL sensor

Example

- Sensor:10 bar (150 psi)
- Upper range value (URL) = 10 bar (150 psi)
- Calibrated/adjusted span: 0 to 5 bar (0 to 75 psi)
- Lower range value (LRV) = 0 bar (0 psi)
- Upper range value (URV) = 5 bar (75 psi)

Turn down (TD):

$$TD = \frac{URL}{|URV - LRV|}$$

$$TD = \frac{10\ \text{bar (150 psi)}}{|5\ \text{bar (75 psi)} - 0\ \text{bar (0 psi)}|} = 2$$

In this example, the TD is 2:1.
This span is based on the zero point.

Registered trademarks

HART®

Registered trademark of the FieldComm Group, Austin, USA

PROFIBUS®

Registered trademark of the PROFIBUS User Organization, Karlsruhe, Germany

FOUNDATION™Fieldbus

Registered trademark of the FieldComm Group, Austin, Texas, USA

Function and system design

Device selection

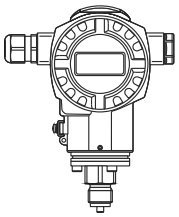

A0020461

PMC71 with capacitive measuring cell and ceramic process isolating diaphragm (Ceraphire®)

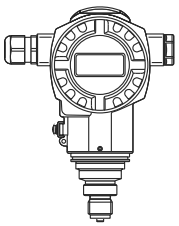

A0020463

PMP71 with piezoresistive measuring cell and metallic welded process isolating diaphragm

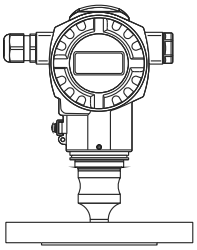

A0020464

PMP75 with diaphragm seal

Field of application

- Gauge pressure and absolute pressure
- Level

Process connections

PMC71:
- Thread
- EN flanges DN 25 – DN 80
- ANSI flanges 1" – 4"
- JIS flanges 50 A – 100 A

PMP71:
- Thread
- DN 25 – DN 80
- ASME 1 ½" – 4"
- JIS 25 A – 100 A
- Oval flange adapters
- Prepared for diaphragm seal mount

PMP75:
Wide range of diaphragm seals

Measuring ranges

- PMC71: From −100/0 to 100 mbar (−1.5/0 to 1.5 psi) to −1/0 to 40 bar (−15/0 to 600 psi)
- PMP71: From −400/0 to 400 mbar (−6/0 to 6 psi) to −1/0 to 700 bar (−15/0 to 10500 psi)
- PMP75: From −400/0 to 400 mbar (−6/0 to 6 psi) to −1/0 to 400 bar (−15/0 to 6000 psi)

OPL

- PMC71: max. 60 bar (900 psi)
- PMP71: max. 1 050 bar (15 750 psi)
- PMP75: max. 600 bar (9 000 psi)

Process temperature range(temperature at process connection)

- PMC71:−25 to +125 °C (−13 to +257 °F)
  −20 to +150 °C (−4 to +302 °F) (High-temperature version, see Product Configurator "Additional option 1" or 110 "Additional option 2" section, option "T")
- PMP71:−40 to +125 °C (−40 to +257 °F)
- PMP75: −70 to +400 °C (−94 to +752 °F)
  (depending on the filling oil)

Ambient temperature range

- Without LCD display: −40 to +85 °C (−40 to +185 °F) optional (PMP71 and PMP75):
  −50 to +85 °C (−58 to +185 °F) Product Configurator, order code for "Test, certificate" option "JN"
- With LCD display: −20 to +70 °C (−4 to +158 °F)
  (extended temperature application range−50 to +85 °C (−58 to +185 °F) with limitations in optical properties, such as display speed and contrast)
- Separate housing −20 to +60 °C (−4 to +140 °F):
- PMP75: Diaphragm seal systems depending on the version

Reference accuracy

- PMC71: Up to ±0.05% of the set span
  PLATINUM version: up to ±0.025 % of the set span
- PMP71: Up to ±0.05% of the set span
  PLATINUM version: up to ±0.025 % of the set span
- PMP75: Up to ±0.075% of the set span

Supply voltage

Supply voltage non-Ex
- 4 to 20 mA HART: 10.5 to 45 V DC
- 1-5V DC: 9 to 35 V DC
- PROFIBUS PA and FOUNDATION Fieldbus: 9 to 32 V DC

Supply voltage Ex ia
10.5 to 30 V DC

Supply voltage Ex d (1-5V DC)
9 to 35 V DC

Output

- 4 to 20 mA with superimposed HART protocol
- 1-5V DC
- PROFIBUS PA
- FOUNDATION Fieldbus

Options

- Inspection certificate 3.1
- HistoROM®/M-DAT memory chip
- Separate housing
- PMP75: gold-plated process isolating diaphragm
- PMP71, PMP75: gold-rhodium coated process isolating diaphragm
- PMP71, PMP75:NACE-compliant materials

Specialties

- PMC71:
  - Metal-free measurement with PVDF connection
  - Special cleaning of the transmitter to remove paint-wetting substances, for use in paint shops
- PMP71:
  - Process connections with minimum oil volume
  - Gas-tight, elastomer-free
- PMP75:
  - Wide range of diaphragm seals
  - For extreme medium temperatures
  - Process connections with minimum oil volume
  - Completely welded versions

Measuring principle

Devices with ceramic process isolating diaphragm (Ceraphire®)

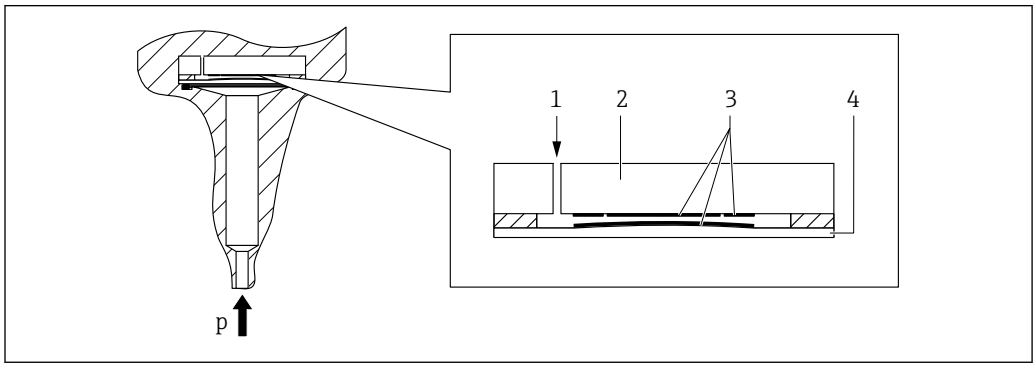

A0020465

1 Air pressure (gauge pressure sensors)
2 Ceramic substrate
3 Electrodes
4 Ceramic process isolating diaphragm

The ceramic sensor is an oil-free sensor, i.e. the process pressure acts directly on the robust ceramic process isolating diaphragm and causes it to deflect. A pressure-dependent change in capacitance is measured at the electrodes of the ceramic substrate and the process isolating diaphragm. The measuring range is determined by the thickness of the ceramic process isolating diaphragm.

Advantages:

- Guaranteed overload resistance up to 40 times the nominal pressure (see "OPL" column in table) → 13)
- The ultrapure 99.9% ceramic (Ceraphire®, see also "www.endress.com/ceraphire") ensures:
  - Extremely high chemical durability
  - High mechanical durability
- Suitable for vacuums
- Secondary containment for enhanced integrity
- Process temperatures up to 150 °C (302 °F)

Devices with metallic process isolating diaphragm

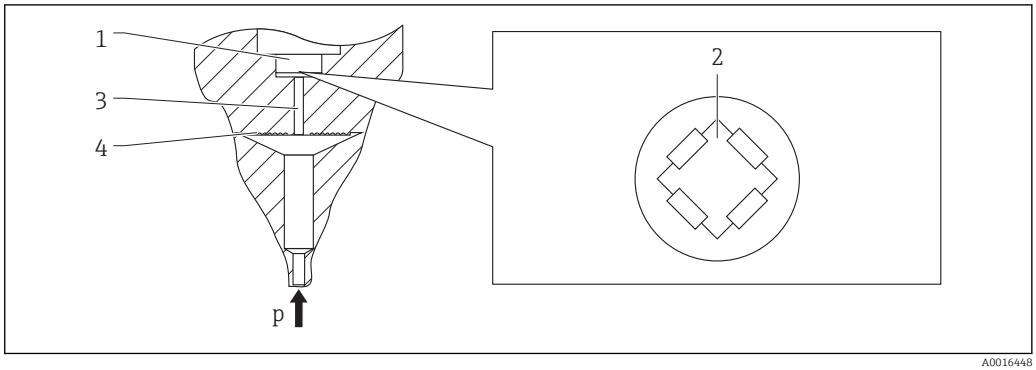

1 Silicon measuring element, substrate
2 Wheatstone bridge
3 Channel with fill fluid
4 Metal process isolating diaphragm

PMP71

The process pressure deflects the metal process isolating diaphragm of the sensor and a fill fluid transfers the pressure to a Wheatstone bridge (semiconductor technology). The pressure-dependent change in the bridge output voltage is measured and evaluated.

Advantages:
- Can be used for process pressures up to 700 bar (10 500 psi)
- High long-term stability
- Guaranteed overload resistance up to 4 times the nominal pressure
- Secondary containment for enhanced integrity
- Significantly reduced thermal effect e.g. compared to diaphragm seal systems with capillaries

PMP75

The operating pressure acts on the process isolating diaphragm of the diaphragm seal and is transferred to the process isolating diaphragm of the sensor by a diaphragm seal fill fluid. The process isolating diaphragm is deflected and a fill fluid transfers the pressure to a resistance measuring bridge. The pressure-dependent change in the bridge output voltage is measured and evaluated.

Advantages:
- Depending on the version, can be used for process pressures up to 400 bar (6 000 psi) and for extreme process temperatures
- High long-term stability
- Guaranteed overload resistance up to 4 times the nominal pressure
- Secondary containment for enhanced integrity

Product design

Level measurement (level, volume and mass):

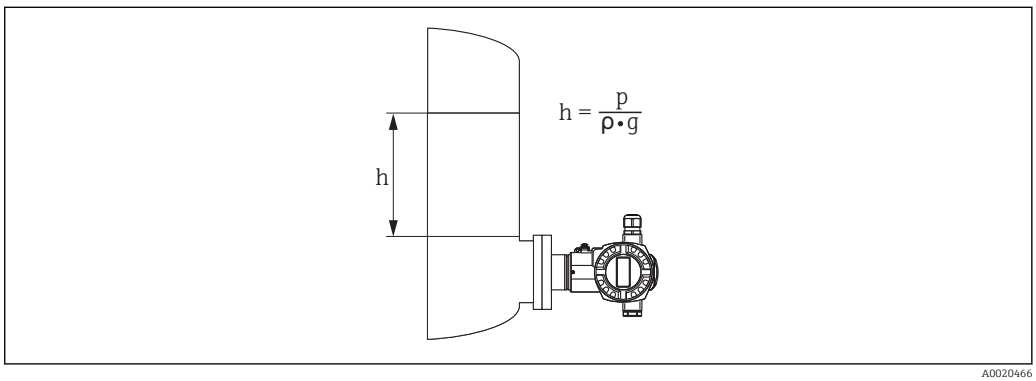

h Height (level)
p Pressure
ρ Density of the medium
g Gravitational constant

Your benefits

- Selection of the level operating mode which is optimum for your application in the device software
- Volume and mass measurements in any container shapes by means of a freely programmable characteristic curve
- Choice of diverse level units with automatic unit conversion
- A customized unit can be specified.
- Has a wide range of uses, e.g.
  - in the event of foam formation
  - in containers with agitators or screen fittings
  - in the event of liquid gases

Applications suitable for custody transfer measurement

The Parts Certificate is issued on the basis of the following standards:
- WELMEC guide 8.8 "General and Administrative Aspects of the Voluntary System of Modular Evaluation of Measuring instruments under the MID".
- OIML R117-1 Edition 2007 (E) "Dynamic measuring systems for liquids other than water".
- EN 12405-1/A1 Edition 2006 "Gas meters – Conversion devices – Part 1: Volume conversion".

Communication protocol

- 4 to 20 mA with HART communication protocol
- PROFIBUS PA
  - The Endress+Hauser devices meet the requirements of the FISCO model.
  - Due to a low current consumption of 13 mA ± 1 mA, the following number of devices can be operated on one bus segment if installing as per FISCO: up to 7 devices for Ex ia, CSA IS and FM IS applications or up to 27 devices for all other applications e.g. in non-hazardous areas, Ex nA etc. Further information on PROFIBUS PA can be found in Operating Instructions BA00034S "PROFIBUS DP/PA: Guidelines for planning and commissioning" and in the PNO Guideline.
- FOUNDATION Fieldbus
  - The Endress+Hauser devices meet the requirements of the FISCO model.
  - Due to a low current consumption of 15.5 mA ± 1 mA, the following number of devices can be operated on one bus segment if installing as per FISCO: up to 6 devices for Ex ia, CSA IS and FM IS applications or up to 24 devices for all other applications e.g. in non-hazardous areas, Ex nA etc. Further information on FOUNDATION Fieldbus, such as requirements for bus system components, can be found in Operating Instructions BA00013S "FOUNDATION Fieldbus Overview".

Input

Measured variable

Measured process variables

- Absolute pressure
- Gauge pressure

Calculated process variables

Level (level, volume or mass)

Measuring range

PMC71 – with ceramic process isolating diaphragm (Ceraphire®) for gauge pressure

Sensor	Maximum sensor measuring range		Lowest calibratable Span [1]	MWP	OPL	Vacuum resistance	Option [2]
	lower (LRL)	upper (URL)					
	[bar (psi)]	[bar (psi)]	[bar (psi)]	[bar (psi)]	[bar (psi)]	[bar_{abs} (psi_{abs})]	
100 mbar (1.5 psi)	−0.1 (−1.5)	+0.1 (+1.5)	0.005 (0.075)	2.7 (40.5)	4 (60)	0.7 (10.5)	1C
250 mbar (3.75 psi)	−0.25 (−3.75)	+0.25 (+3.75)	0.005 (0.075)	3.3 (49.5)	5 (75)	0.5 (7.5)	1E
400 mbar (6 psi)	−0.4 (−6)	+0.4 (+6)	0.005 (0.075)	5.3 (79.5)	8 (120)	0	1F
1 bar (15 psi)	−1 (−15)	+1 (+15)	0.01 (0.15)	6.7 (100.5)	10 (150)	0	1H
2 bar (30 psi)	−1 (−15)	+2 (+30)	0.02 (0.3)	12 (180)	18 (270)	0	1K
4 bar (60 psi)	−1 (−15)	+4 (+60)	0.04 (0.6)	16.7 (250.5)	25 (375)	0	1M
10 bar (150 psi)	−1 (−15)	+10 (+150)	0.1 (1.5)	26.7 (400.5)	40 (600)	0	1P
40 bar (600 psi)	−1 (−15)	+40 (+600)	0.4 (6)	40 (600)	60 (900)	0	1S

1) Turn down > 100:1 on request or can be set on device
2) Product Configurator, order code for "Sensor range; sensor over pressure limit"

PMC71 – with ceramic process isolating diaphragm (Ceraphire®) for absolute pressure

Sensor	Maximum sensor measuring range		Lowest calibratable Span [1]	MWP	OPL	Vacuum resistance	Option [2]
	lower (LRL)	upper (URL)					
	[bar_{abs} (psi_{abs})]	[bar_{abs} (psi_{abs})]	[bar (psi)]	[bar_{abs} (psi_{abs})]	[bar_{abs} (psi_{abs})]	[bar_{abs} (psi_{abs})]	
100 mbar (1.5 psi)	0	+0.1 (+1.5)	0.005 (0.075)	2.7 (40.5)	4 (60)	0	2C
250 mbar (3.75 psi)	0	+0.25 (+3.75)	0.005 (0.075)	3.3 (49.5)	5 (75)	0	2E
400 mbar (6 psi)	0	+0.4 (+6)	0.005 (0.075)	5.3 (79.5)	8 (120)	0	2F
1 bar (15 psi)	0	+1 (+15)	0.01 (0.15)	6.7 (100.5)	10 (150)	0	2H
2 bar (30 psi)	0	+2 (+30)	0.02 (0.3)	12 (180)	18 (270)	0	2K
4 bar (60 psi)	0	+4 (+60)	0.04 (0.6)	16.7 (250.5)	25 (375)	0	2M
10 bar (150 psi)	0	+10 (+150)	0.1 (1.5)	26.7 (400.5)	40 (600)	0	2P
40 bar (600 psi)	0	+40 (+600)	0.4 (6)	40 (600)	60 (900)	0	2S

1) Turn down > 100:1 on request or can be set on device
2) Product Configurator, order code for "Sensor range; sensor over pressure limit"

PMP71 and PMP75 – metallic process isolating diaphragm for gauge pressure

Sensor	Maximum sensor measuring range		Lowest calibratable Span [1]	MWP	OPL	Vacuum resistance [2]	Option [3]
	lower (LRL)	upper (URL)				Silicone oil/ Inert oil	
	[bar (psi)]	[bar (psi)]	[bar (psi)]	[bar (psi)]	[bar (psi)]	[bar_{abs} (psi_{abs})]	
400 mbar (6 psi)	−0.4 (−6)	+0.4 (+6)	0.005 (0.075)	4 (60)	6 (90)	0.01/0.04 (0.15/0.6)	1F
1 bar (15 psi)	−1 (−15)	+1 (+15)	0.01 (0.15)	6.7 (100)	10 (150)		1H
2 bar (30 psi)	−1 (−15)	+2 (+30)	0.02 (0.3)	13.3 (200)	20 (300)		1K
4 bar (60 psi)	−1 (−15)	+4 (+60)	0.04 (0.6)	18.7 (280.5)	28 (420)		1M
10 bar (150 psi)	−1 (−15)	+10 (+150)	0.1 (1.5)	26.7 (400.5)	40 (600)		1P
40 bar (600 psi)	−1 (−15)	+40 (+600)	0.4 (6)	100 (1500)	160 (2400)		1S
100 bar (1 500 psi)	−1 (−15)	+100 (+1500)	1.0 (15)	100 (1500)	400 (6000)		1U
400 bar (6 000 psi)	−1 (−15)	+400 (+6000)	4.0 (60)	400 (6000)	600 (9000)		1W
700 bar (10 500 psi) [4]	−1 (−15)	+700 (+10500)	7.0 (105)	700 (10500)	1050 (15750)		1X

1) Turn down > 100:1 on request or can be set on device
2) The vacuum resistance applies for the measuring cell under reference operating conditions. A ceramic process isolating diaphragm is recommended for applications in the limit range. For type PMP75, the pressure and temperature application limits of the selected filling oil must also be observed → 🖹 113.
3) Product Configurator, order code for "Sensor range; sensor over pressure limit"
4) PMP71 only, PMP75 on request

PMP71 and PMP75 – metallic process isolating diaphragm for absolute pressure

Sensor	Maximum sensor measuring range		Lowest calibratable Span [1]	MWP	OPL	Vacuum resistance [2]	Option [3]
	lower (LRL)	upper (URL)				Silicone oil/ Inert oil	
	[bar_{abs} (psi_{abs})]	[bar_{abs} (psi_{abs})]	[bar (psi)]	[bar_{abs} (psi_{abs})]	[bar_{abs} (psi_{abs})]	[bar_{abs} (psi_{abs})]	
400 mbar (6 psi)	0	+0.4 (+6)	0.005 (0.075)	4 (60)	6 (90)	0.01/0.04 (0.15/0.6)	2F
1 bar (15 psi)	0	+1 (+15)	0.01 (0.15)	6.7 (100)	10 (150)		2H
2 bar (30 psi)	0	+2 (+30)	0.02 (0.3)	13.3 (200)	20 (300)		2K
4 bar (60 psi)	0	+4 (+60)	0.04 (0.6)	18.7 (280.5)	28 (420)		2M
10 bar (150 psi)	0	+10 (+150)	0.1 (1.5)	26.7 (400.5)	40 (600)		2P
40 bar (600 psi)	0	+40 (+600)	0.4 (6)	100 (1500)	160 (2400)		2S
100 bar (1 500 psi)	0	+100 (+1500)	1.0 (15)	100 (1500)	400 (6000)		2U
400 bar (6 000 psi)	0	+400 (+6000)	4.0 (60)	400 (6000)	600 (9000)		2W
700 bar (10 500 psi) [4]	0	+700 (+10500)	7.0 (105)	700 (10500)	1050 (15750)		2X

1) Turn down > 100:1 on request or can be set on device
2) The vacuum resistance applies for the measuring cell under reference operating conditions. A ceramic process isolating diaphragm is recommended for applications in the limit range. For type PMP75, the pressure and temperature application limits of the selected filling oil must also be observed → 🖹 113.
3) Product Configurator, order code for "Sensor range; sensor over pressure limit"
4) PMP71 only, PMP75 on request

PMP71 - metallic process isolating diaphragms for absolute pressure with MID parts certificate

Sensor	Maximum sensor measuring range		Min. WP for gas applications suitable for custody transfer measurement	Min. WP for liquid applications suitable for custody transfer measurement	MWP	OPL	Vacuum resistance [1]	Option [2]
	lower (LRL) [3]	upper (URL) [4]					Silicone oil/ Inert oil	
[bar (psi)]	[bar_{abs} (psi_{abs})]	[bar_{abs} (psi_{abs})]	[bar (psi)]	[bar (psi)]	[bar_{abs} (psi_{abs})]	[bar_{abs} (psi_{abs})]	[bar (psi)]	
10 (150)	0	+10 (150)	0.5 (7.5)	0.5 (7.5)	26.7 (400.5)	40 (600)	0.01/0.04 (0.15/1)	MP
50 (750)	0	+50 (750)	10 (150)	2.5 (37.5)	100 (1500)	400 (6000)	0.01/0.04 (0.15/1)	MT
100 (1500)	0	+100 (1500)	5 (75)	5 (75)	100 (1500)	400 (6000)	0.01/0.04 (0.15/1)	MU

1) The vacuum resistance applies to the measuring cell under reference operating conditions
2) Product Configurator, order code for "Sensor range; sensor over pressure limit"
3) By default, the device is set to a lower sensor measuring range of 0 bar. Please specify when ordering if the lower sensor measuring range is to be set to a different default value.
4) Max. WP (working pressure) for gas and liquid applications suitable for calibration to regulatory standards

Output

Output Signal

- 4 to 20 mA with superimposed digital communication protocol HART, 2-wire
- 1-5V DC, 3-wire
- Digital communication signal PROFIBUS PA (Profile 3.0), 2-wire
  - Signal coding: Manchester Bus Powered (MBP): Manchester II
  - Transmission rate: 31.25 KBit/s voltage mode
- Digital communication signal FOUNDATION Fieldbus, 2-wire
  - Signal coding: Manchester Bus Powered (MBP): Manchester II
  - Transmission rate: 31.25 KBit/s voltage mode

Output	Internal + LCD	External + LCD	Internal
	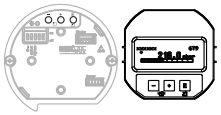	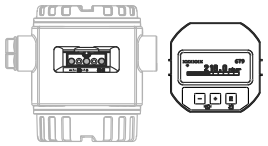	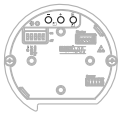 A0021280
	Option [1]		
4 to 20mA HART	B	A	C
4 to 20mA HART, Li=0	E	D	F
1-5V DC	H	G	-
PROFIBUS PA	N	M	O
FOUNDATION Fieldbus	Q	P	R

1) Product Configurator, order code for "Display, operation: "

Signal range

4 to 20 mA

3.8 mA to 20.5 mA

1-5V DC

0.95 to 5.125 V

Signal on alarm

4 to 20 mA HART

As per NAMUR NE43.

- Max. alarm: can be set from 21 to 23 mA (factory setting: 22 mA)
- Hold measured value: last measured value is held
- Min. alarm: 3.6 mA

1-5V DC

- Max. alarm: can be set from 5.25 to 5.75 V
- Min. Alarm: 0.9 V

PROFIBUS PA

As per NAMUR NE43.

Can be set in the Analog Input Block.

Options:
- Last Valid Out Value (factory setting)
- Fail Safe Value
- Status bad

FOUNDATION Fieldbus

As per NAMUR NE43.

Can be set in the Analog Input Block.

Options:
- Last Good Value
- Fail Safe Value (factory setting)
- Wrong Value

Load

4 to 20 mA HART

In order to guarantee sufficient terminal voltage in two-wire devices, a maximum load resistance R (including line resistance) must not be exceeded depending on the supply voltage U_0 of the supply unit. In the following load diagrams, observe the position of the jumper and the explosion protection:

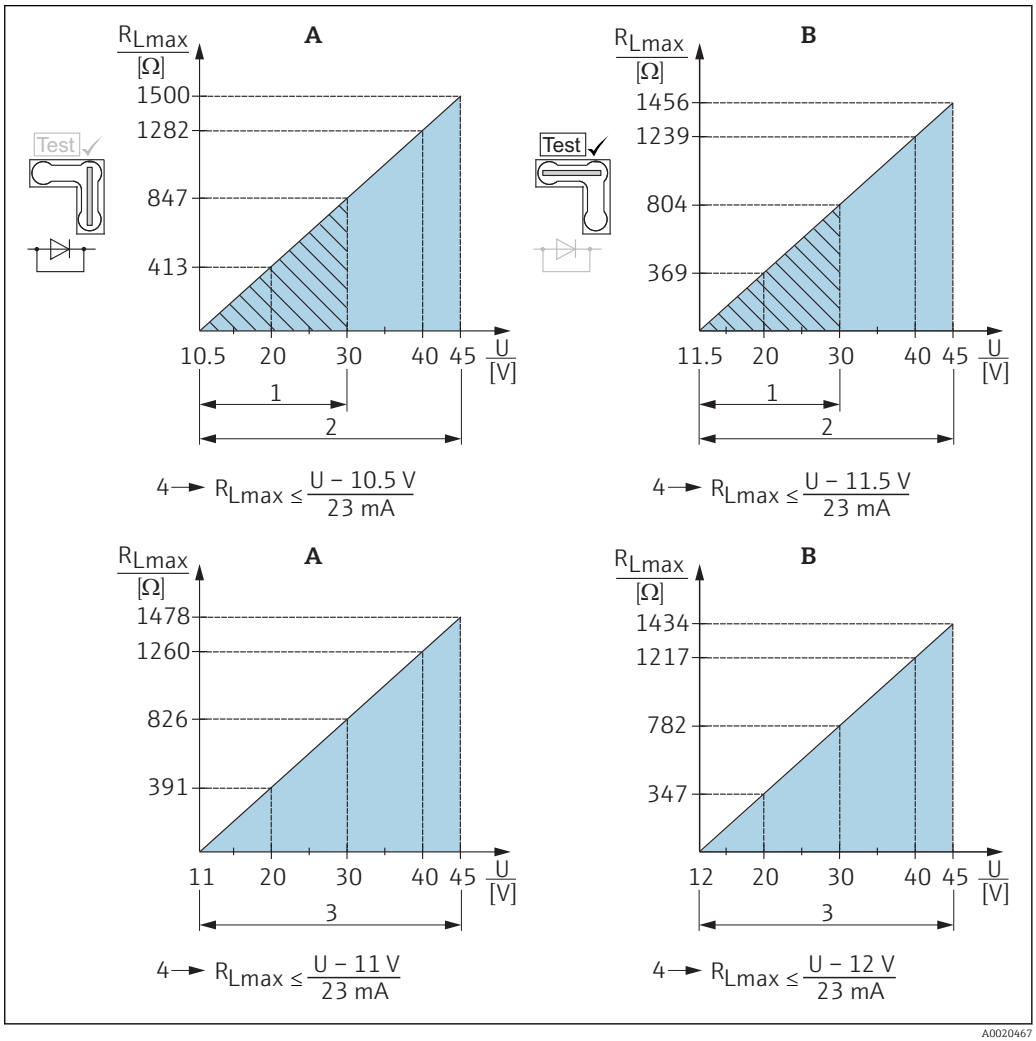

A0020467

A Jumper for 4 to 20 mA test signal set to "Non-test" position
B Jumper for 4 to 20 mA test signal set to "Test" position
1 Power supply 10.5 (11.5) to 30 V DC for 1/2 G, 1 GD, 1/2 GD, FM IS, CSA IS, IECEx ia, NEPSI Ex ia
2 Power supply 10.5 (11.5) to 45 V DC for devices for non-hazardous areas, 1/2 D, 1/3 D, 2 G Ex d, 3 G Ex nA, FM XP, FM DIP, FM NI, CSA XP, CSA dust ignition-proof, NEPSI Ex d
3 Power supply 11 (12) to 45 V DC for PMC71, Ex d[ia], NEPSI Ex d[ia]
4 R_{Lmax} maximum load resistance
U Supply voltage

When operating via a handheld terminal or via a PC with an operating program, a minimum communication resistance of 250 Ω must be taken into account.

1-5V DC

The load must be at least 100 kΩ.

Dead time, time constant

Presentation of the dead time and the time constant:

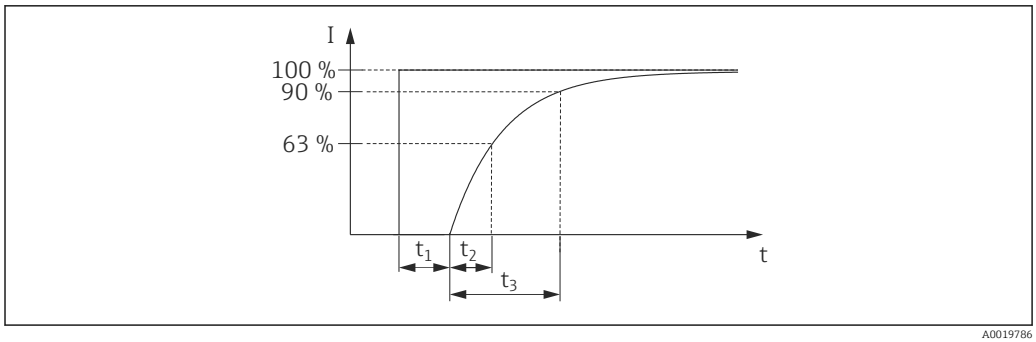

Dynamic behavior, current output

Type		Measuring cell	Dead time (t_1) [ms]	Time constant T63 (t_2) [ms]	Time constant T90 (t_3) [ms]
PMC71	max.	All	90	120	276
PMP71	max.	▪ 400 mbar (6 psi) ▪ ≥1 bar (15 psi)	45	▪ 70 ▪ 35	▪ 161 ▪ 81
PMP75	max.	PMP71 + influence of the diaphragm seal			

Dynamic behavior Digital output (HART electronics)

A typical burst rate of 300 ms results in the following behavior:

Type		Measuring cell	Dead time (t_1) [ms]	Dead time (t_1) [ms] + Time constant T63 (t_2) [ms]	Dead time (t_1) [ms] + Time constant T90 (t_3) [ms]
PMC71	remains stable for a minimum of	All	250	370	436
	max.		1050	1170	1236
PMP71	remains stable for a minimum of	▪ 400 mbar (6 psi) ▪ ≥1 bar (15 psi)	205	▪ 275 ▪ 240	▪ 321 ▪ 241
	max.	▪ 400 mbar (6 psi) ▪ ≥1 bar (15 psi)	1005	▪ 1075 ▪ 1040	▪ 1121 ▪ 1041
PMP75	max.	PMP71 + influence of the diaphragm seal			

Reading cycle

- Acyclic: max. 3/s, typically 1/s (depending on command # and number of preambles)
- Cyclic (burst): max. 3/s, typically 2/s

The device commands the BURST MODE functionality for cyclical value transmission via the HART communication protocol.

Cycle time (update time)

Cyclic (burst): min. 300 ms

Response time

- Acyclic: min. 330 ms, typically 590 ms (depending on command # and number of preambles)
- Cyclic (burst): min. 160 ms, typically 350 ms (depending on command # and number of preambles)

Dynamic behavior 1-5V DC

Type		Measuring cell	Dead time (t_1) [ms]	Time constant T63 (t_2) [ms]	Time constant T90 (t_3) [ms]
PMP71	max.	All	40	70	180

Dynamic behavior PROFIBUS PA

A typical PLC cycle time of 1 s results in the following behavior:

Type		Measuring cell	Dead time (t_1) [ms]	Dead time (t_1) [ms] + Time constant T63 (t_2) [ms]	Dead time (t_1) [ms] + Time constant T90 (t_3) [ms]
PMC71	remains stable for a minimum of	All	125	245	311
	max.		1325	1445	1511
PMP71	remains stable for a minimum of	▪ 400 mbar (6 psi) ▪ ≥1 bar (15 psi)	80	▪ 150 ▪ 115	▪ 196 ▪ 116
	max.	▪ 400 mbar (6 psi) ▪ ≥1 bar (15 psi)	1280	▪ 1350 ▪ 1315	▪ 1396 ▪ 1316
PMP75	max.	PMP71 + influence of the diaphragm seal			

Reading cycle (PLC)

- Acyclic: Typically 25/s
- Cyclic: Typically 30/s (depending on the number and type of the function blocks used in the closed-control loop)

Cycle time (update time)

remains stable for a minimum of 200 ms

The cycle time in a bus segment in cyclic data communication depends on the number of devices, on the segment coupler used and on the internal PLC cycle time. A new measured value can be determined up to five times a second.

Response time

- Acyclic: Approx. 60 ms to 70 ms (depending on Min. Slave Interval)
- Cyclic: Approx. 10 ms to 13 ms (depending on Min. Slave Interval)

Dynamic behavior FOUNDATION Fieldbus

A typical configuration for the macro cycle time (host system) of 1 s results in the following behavior:

Type		Measuring cell	Dead time (t_1) [ms]	Dead time (t_1) [ms] + Time constant T63 (t_2) [ms]	Dead time (t_1) [ms] + Time constant T90 (t_3) [ms]
PMC71	remains stable for a minimum of	All	135	255	321
	max.		1135	1255	1321
PMP71	remains stable for a minimum of	▪ 400 mbar (6 psi) ▪ ≥1 bar (15 psi)	90	▪ 160 ▪ 125	▪ 206 ▪ 126
	max.	▪ 400 mbar (6 psi) ▪ ≥1 bar (15 psi)	1090	▪ 1160 ▪ 1125	▪ 1206 ▪ 1126
PMP75	max.	PMP71 + influence of the diaphragm seal			

Reading cycle

- Acyclic: Typically 10/s
- Cyclic: max. 10/s (dependent on the number and type of function blocks used in a closed-control loop)

Cycle time (update time)

Cyclic: Min. 100 ms

Response time

- Acyclic: Typically 100 ms (for standard bus parameter settings)
- Cyclic: max. 20 ms (for standard bus parameter settings)

Damping

A damping affects all outputs (output signal, display):
- via local display, handheld terminal or PC (handheld terminal or PC not for 1-5V DC) with operating program, continuous from 0 to 999 s
- Also for HART and PROFIBUS PA: Via DIP switch on the electronic insert, switch position "on" = set value and "off"
- 1-5V DC: via DIP switch on electronic insert switch position "on" = set value and "off"
- Factory setting: 2 s

Alarm current

Description	Option [1]
Min alarm current	J
HART burst mode PV	J
Min alarm current + HART burst mode PV	J

1) Product Configurator, "Additional options 1" and "Additional options 2" ordering feature

Firmware version

Description	Option [1]
02.20.zz, HART 7, DevRev22	72
02.11.zz, HART 5, DevRev21	73
04.00.zz, FF, DevRev07	74
04.01.zz, PROFIBUS PA, DevRev03	75
02.10.zz, HART 5, DevRev21	76
03.00.zz, FF, DevRev06	77
04.00.zz, PROFIBUS PA	78
02.30.zz, HART 7	In preparation

1) Product Configurator, order code for "Firmware version"

HART protocol-specific data

Manufacturer ID	17 (11 hex)
Device type code	24 (18 hex)
Device revision	▪ 21 (15 hex) - SW version 02.1y.zz - HART specification 5 ▪ 22 (16 hex) - SW version 02.2y.zz - HART specification 7
HART specification	▪ 5 ▪ 7
DD revision	▪ 4 (Russian in language selection) for device revision 21 ▪ 3 (Dutch in language selection) for device revision 21 ▪ 1 for device revision 22
Device description files (DTM, DD)	Information and files at: ▪ www.endress.com ▪ www.fieldcommgroup.org
HART load	Min. 250 Ω

HART device variables	The measured values are assigned to the device variables as follows: **Measured values for PV (primary variable)** ▪ Pressure ▪ Level ▪ Tank content **Measured values for SV, TV (second and third variable)** Pressure **Measured values for QV (fourth variable)** Temperature
Supported functions	▪ Burst mode ▪ Additional transmitter status ▪ Device locking ▪ Alternative operating modes

PROFIBUS PA protocol-specific data

Manufacturer ID	17 (11 hex)
Identification number	1541 hex
Profile version	3.0 ▪ SW version 03.00.zz ▪ SW version 04.00.zz 3.02 SW version 04.01.zz (device revision 3) Compatibility with SW version 03.00.zz and higher.
GSD revision	▪ 4 (SW version 3.00.zz and 4.00.zz) ▪ 5 (device revision 3)
DD revision	▪ 1 (SW version 3.00.zz and 4.00.zz) ▪ 1 (device revision 3)
GSD file	Information and files at: ▪ www.endress.com ▪ www.profibus.org
DD files	
Output values	**Measured value for PV (via Analog Input Function Block)** ▪ Pressure ▪ Level ▪ Tank content **Measured value for SV** ▪ Pressure ▪ Temperature
Input values	Input value sent from PLC, can be shown on display
Supported functions	▪ Identification & maintenance Simplest device identifier on the control system and nameplate ▪ Condensed status (only with Profile Version 3.02) ▪ Automatic ID number adjustment and switchable to the following ID numbers (only with Profile Version 3.02): – 9700: Profile-specific transmitter identification number with the "Classic" or "Condensed" status". – 1501: Compatibility mode for the old Cerabar S generation (PMC731, PMP731, PMC631, PMP635). – 1541: Identification number of the new Cerabar S generation (PMC71, PMP71, PMP75). ▪ Device locking: The device can be locked by hardware or software.

FOUNDATION Fieldbus protocol-specific data

Manufacturer ID	452B48 hex
Device type	1007 hex
Device revision	▪ 6 - SW version 03.00.zz ▪ 7 - SW version 04.00.zz (FF-912)
DD revision	▪ 3 (device revision 6) ▪ 2 (device revision 7)
CFF revision	▪ 4 (device revision 6) ▪ 1 (device revision 7)

DD files	Information and files at: ▪ www.endress.com ▪ www.fieldcommgroup.org
CFF files	
Device tester version (ITK version)	▪ 5.0 (device revision 6) ▪ 6.01 (device revision 7)
Number of ITK test campaign	▪ IT054600 (Device Revision 6) ▪ IT085500 (Device Revision 7)
Link Master (LAS) capable	Yes
Choice of "Link Master" and "Basic Device"	Yes, factory setting is Basic Device
Node address	Factory setting: 247 (F7 hex)
Supported functions	Field diagnostics profile (only with FF912) The following methods are supported: ▪ Restart ▪ Configure error as warning or alarm ▪ HistoROM ▪ Peakhold ▪ Alarm info ▪ Sensor trim
Number of VCRs	▪ 44 (device revision 6) ▪ 24 (device revision 7)
Number of link objects in VFD	50

Virtual communication references (VCRs)

	Device revision 6	Device revision 7
Permanent entries	44	1
Client VCRs	0	0
Server VCRs	5	10
Source VCRs	8	43
Sink VCRs	0	0
Subscriber VCRs	12	43
Publisher VCRs	19	43

Link settings

	Device revision 6	Device revision 7
Slot time	4	4
Min. Inter PDU delay	12	10
Max. response delay	10	10

Transducer Blocks

Block	Content	Output values
TRD1 Block	Contains all parameters related to the measurement	▪ Pressure or level (channel 1) ▪ Process temperature (channel 2)
Service Block	Contains service information	▪ Pressure after damping (channel 3) ▪ Pressure peakhold indicator (channel 4) ▪ Counter for max. pressure transgressions (channel 5)

Block	Content	Output values
Diagnostic Block	Contains diagnostic information	Error code via DI channels (channel 0 to 16)
Display Block	Contains parameters to configure the onsite display	No output values

Function blocks

Block	Content	Number blocks	Execution time		Functionality	
			Device Revision 6	Device Revision 7	Device Revision 6	Device Revision 7
Resource Block	This block contains all the data that uniquely identifies the device; it is an electronic version of a nameplate for the device.	1			enhanced	enhanced
Analog Input Block 1 Analog Input Block 2	The AI Block receives the measuring data from the Sensor Block, (selectable via a channel number) and makes the data available to other function blocks at its output. Enhancement: Digital outputs for process alarms, fail safe mode	2	45 ms	45 ms (without trend and alarm reports)	enhanced	enhanced
Digital Input Block	This block contains the discrete data of the Diagnose Block (selectable via a channel number 0 to 16) and provides them for other blocks at the output.	1	40 ms	30 ms	standard	enhanced
Digital Output Block	This block converts the discrete input and thus initiates an action (selectable via a channel number) in the DP Flow Block or in the Service Block. Channel 1 resets the counter for max. pressure transgressions.	1	60 ms	40 ms	standard	enhanced
PID Block	This block is used as a proportional-integral-derivative controller and can be used universally for closed-loop-control in the field. It enables cascade mode and feedforward control. Input IN can be indicated on the display. The selection is performed in the Display Block (DISPLAY_MAIN_LINE_CONTENT).	1	120 ms	70 ms	standard	enhanced
Arithmetic Block	This block is designed to permit simple use of popular measurement math functions. The user does not have to know how to write equations. The math algorithm is selected by name, chosen by the user for the function to be performed.	1	50 ms	40 ms	standard	enhanced
Input Selector Block	The Input Selector Block facilitates the selection of up to four inputs and generates an output based on the configured action. This block normally receives its inputs from AI Blocks. The block performs maximum, minimum, average and 'first good' signal selection. Inputs IN1 to IN4 can be indicated on the display. The selection is performed in the Display Block (DISPLAY_MAIN_LINE_CONTENT).	1	35 ms	35 ms	standard	enhanced
Signal Characterizer Block	The Signal Characterizer Block has two sections, each with an output that is a non-linear function of the respective input. The non-linear function is generated by a single look-up table with 21 arbitrary x-y pairs.	1	30 ms	40 ms	standard	enhanced
Integrator Block	The Integrator Block integrates a variable as a function of the time or accumulates the counts from a Pulse Input Block. The block can be used as a totalizer that counts up until a reset, or as a batch totalizer whereby the integrated value is compared against a target value generated before or during the control routine and generates a binary signal when the target value is reached.	1	35 ms	40 ms	standard	enhanced
Analog Alarm Block	This block contains all process alarm conditions (working like a comparator) and represents them at the output.	1	35 ms	35 ms	standard	enhanced

Additional function block information:

Instantiatable function blocks	YES	YES
Number of additional instantiatable function blocks	11	5

Power supply

WARNING

Electrical safety is compromised by an incorrect connection!

- When using the measuring device in hazardous areas, the relevant national standards and regulations as well as the Safety Instructions or Installation or Control Drawings must also be observed.→ 127.
- All explosion protection data are given in separate documentation which is available upon request. The Ex documentation is supplied as standard with all Ex devices→ 127.
- Devices with integrated overvoltage protection must be grounded→ 29.
- Protective circuits against reverse polarity, HF influences and overvoltage peaks are integrated.

Terminal assignment

4 to 20 mA HART

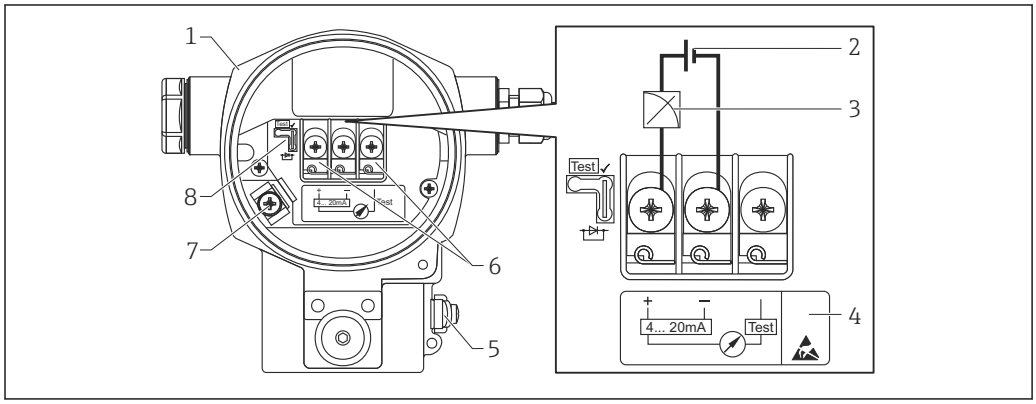

A0019989

1 *Housing*
2 *Supply voltage*
3 *4 to 20 mA*
4 *Devices with integrated overvoltage protection are labeled "OVP" (overvoltage protection) here.*
5 *External ground terminal*
6 *4 to 20 mA test signal between positive and test terminal*
7 *Internal ground terminal*
8 *Jumper for 4 to 20 mA test signal*

1-5V DC

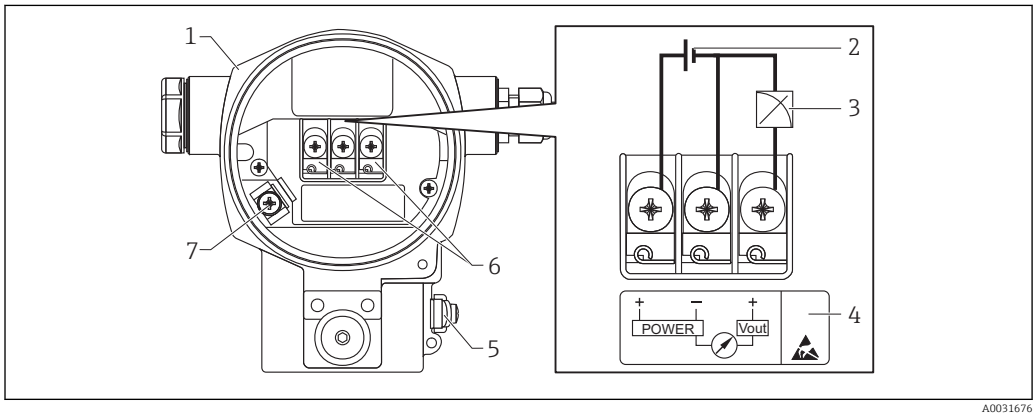

A0031676

1 *Housing*
2 *Supply voltage*
3 *1-5V DC*
4 *Overvoltage protection (OVP) marking*
5 *External ground terminal*
6 *Terminals*
7 *Internal ground terminal*

PROFIBUS PA and FOUNDATION Fieldbus

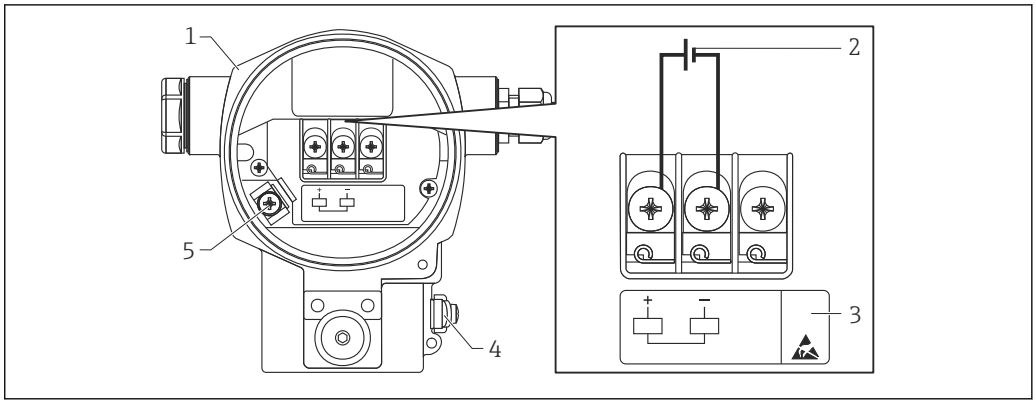

A0020158

1 Housing
2 Supply voltage
3 Devices with integrated overvoltage protection are labeled "OVP" (overvoltage protection) here.
4 External ground terminal
5 Internal ground terminal

Supply voltage

4 to 20 mA HART

Electronic version	Jumper for 4 to 20 mA test signal in "Test" position (delivery status)	Jumper for 4 to 20 mA test signal in "Non-test" position
Version for non-hazardous area	11.5 to 45 V DC	10.5 to 45 V DC
Intrinsically safe	11.5 to 30 V DC	10.5 to 30 V DC
▪ Other types of protection ▪ Devices without certificate	11.5 to 45 V DC (versions with 35 V DC plug-in connection)	10.5 to 45 V DC (versions with 35 V DC plug-in connection)

Measuring a 4 to 20 mA test signal

Jumper position for test signal	Description
 A0019992	▪ Measurement of 4 to 20 mA test signal via the positive and test terminal: Possible. (Thus, the output current can be measured without interruption via the diode.) ▪ Delivery status ▪ Minimum supply voltage: 11.5 V DC
 A0019993	▪ Measurement of 4 to 20 mA test signal via positive and test terminal: Not possible. ▪ Minimum supply voltage: 10.5 V DC

1-5V DC

- Non-hazardous area: 9 to 35 V DC
- Ex-d: 9 to 35 V DC

PROFIBUS PA

- Version for non-hazardous areas: 9 to 32 V DC
- Ex ia: 10.5 to 30 V DC

FOUNDATION Fieldbus

- Version for non-hazardous areas: 9 to 32 V DC
- Ex ia: 10.5 to 30 V DC

Current consumption

- 1-5V DC:
  9 V = 1.8 mA
  35 V = 0.8 mA
- PROFIBUS PA: 13 mA ±1 mA, switch-on current corresponds to IEC 61158-2, Clause 21
- FOUNDATION Fieldbus: 15.5 mA ±1 mA, switch-on current corresponds to IEC 61158-2, Clause 21

Electrical connection

PROFIBUS PA

The digital communication signal is transmitted to the bus via a two-wire connection. The bus also provides the power supply. For further information on the network structure and grounding, and for further bus system components such as bus cables, see the relevant documentation, e.g. Operating Instructions BA00034S "PROFIBUS DP/PA: Guidelines for planning and commissioning" and the PNO Guideline.

FOUNDATION Fieldbus

The digital communication signal is transmitted to the bus via a two-wire connection. The bus also provides the power supply. For further information on the network structure and grounding and for further bus system components such as bus cables, see the relevant documentation, e.g. Operating Instructions BA00013S "FOUNDATION Fieldbus Overview" and the FOUNDATION Fieldbus Guideline.

Terminals

- Supply voltage and internal ground terminal: 0.5 to 2.5 mm^2 (20 to 14 AWG)
- External ground terminal: 0.5 to 4 mm^2 (20 to 12 AWG)

Cable entries

Approval	Cable gland	Clamping area
Standard, II 1/2 G Ex ia, IS	Plastic M20x1.5	5 to 10 mm (0.2 to 0.39 in)
ATEX II 1/2 D, II 1/3 D, II 1/2 GD Ex ia, II 1 GD Ex ia, II 3 G Ex nA	Metal M20x1.5 (Ex e)	7 to 10.5 mm (0.28 to 0.41 in)

1-5V DC

The cable entries have a 1/2 FNPT thread. The connection on the customer's side is protected by a plastic connector. A cable gland is not envisaged.

For additional technical data, see section on housing → 55

Device plug

Devices with Harting plug Han7D

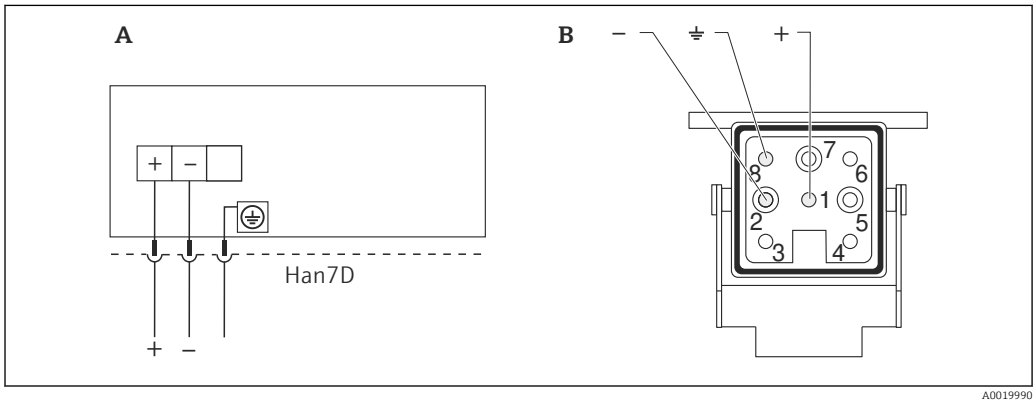

A Electrical connection for devices with Harting plug Han7D
B View of the plug-in connection on the device

Material: CuZn, gold-plated plug-in jack and plug

Cable version connection

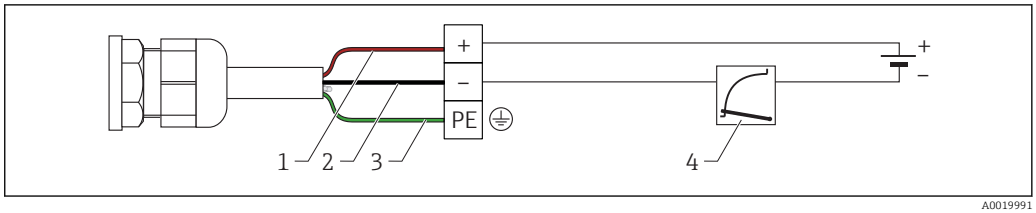

1 *rd = red*
2 *bk = black*
3 *gnye = green*
4 *4 to 20 mA*

Connection via cable version 1-5V DC

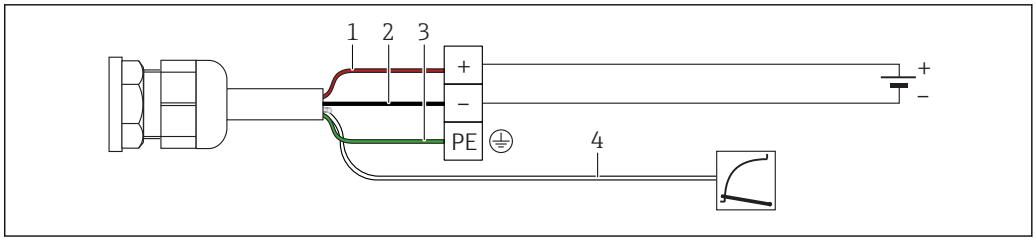

1 *rd = red*
2 *bk = black*
3 *gnye = green*
4 *1-5V DC*

Devices with M12 plug

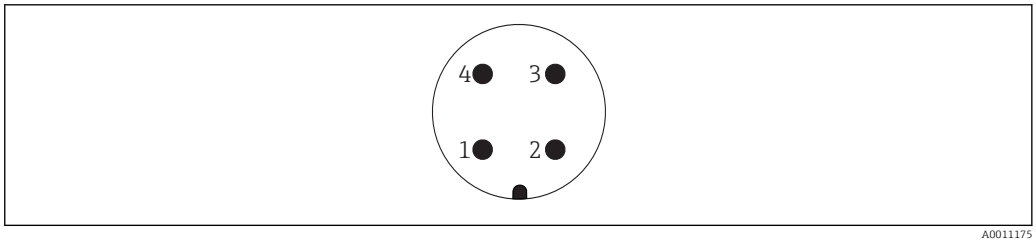

1 *Signal +*
2 *Not assigned*
3 *Signal –*
4 *Ground*

Endress+Hauser offers the following accessories for devices with an M12 plug:

Plug-in jack M 12x1, straight
- Material: Body PA; coupling nut CuZn, nickel-plated
- Degree of protection (fully locked): IP67
- Order number: 52006263

Plug-in jack M 12x1, elbowed
- Material: Body PBT/PA; coupling nut GD-Zn, nickel-plated
- Degree of protection (fully locked): IP67
- Order number: 71114212

Cable 4x0.34 mm^2 (20 AWG) with M12 socket, elbowed, screw plug, length 5 m (16 ft)
- Material: Body PUR; coupling nut CuSn/Ni; cable PVC
- Degree of protection (fully locked): IP67
- Order number: 52010285

Devices with 7/8" plug

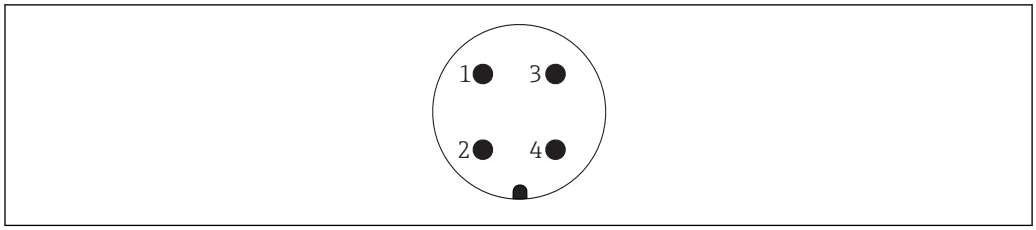

A0011176

1 *Signal –*
2 *Signal +*
3 *Not assigned*
4 *Shielding*

External thread: 7/8 - 16 UNC
- Material: 316L (1.4401)
- Degree of protection: IP68

Cable specification

HART

- Endress+Hauser recommends using shielded, twisted-pair two-wire cables.
- Cable outer diameter: 5 to 9 mm (0.2 to 0.35 in) depending on the cable entry used → 🖹 26

1-5V DC

- Endress+Hauser recommends using a shielded cable.
- Cable outer diameter: 5 to 9 mm (0.2 to 0.35 in) depending on the cable entry used → 🖹 26

Maximum cable length

The following table shows the tolerance of the voltage output for a representative cable with a length of up to 100 m (328 ft), a resistance of 18 Ohm/km and specification 18 AWG (cable cross-section 0.8 mm^2).

Tolerance of voltage output at cable end	Length
0.5 mV	25 m (82 ft)
1 mV	50 m (164 ft)
1.5 mV	75 m (246 ft)
2 mV	100 m (328 ft)

PROFIBUS PA

Use a twisted, shielded twin-core cable, preferably cable type A.

For further information regarding cable specifications, see the Operating Instructions BA00034S "PROFIBUS DP/PA: Guidelines for planning and commissioning", the PNO guideline 2.092 "PROFIBUS PA User and Installation Guideline" and IEC 61158-2 (MBP).

FOUNDATION Fieldbus

Use a twisted, shielded twin-core cable, preferably cable type A.

For further information on the cable specifications, see Operating Instructions BA00013S "FOUNDATION Fieldbus Overview", FOUNDATION Fieldbus Guideline and IEC 61158-2 (MBP).

Start-up current

12 mA

Residual ripple

Without influence on 4 to 20 mA signal up to ±5% residual ripple within the permitted voltage range [according to HART hardware specification HCF_SPEC-54 (DIN IEC 60381-1)].

Overvoltage protection (optionally for HART, PROFIBUS PA and FOUNDATION Fieldbus)

- Overvoltage protection:
  - Nominal functioning DC voltage: 600 V
  - Nominal discharge current: 10 kA
- Surge current check î = 20 kA satisfied as per DIN EN 60079-14: 8/20 µs
- Arrester AC current check I = 10 A satisfied

Ordering information: Product Configurator, order code for "Additional options 1" or Additional options 2", option "M"

NOTICE

Device could be destroyed!

► Devices with integrated overvoltage protection must be grounded.

Influence of power supply

≤0.0006 % of URL/1 V

Performance characteristics of PMP71/PMP75 metal pressure transmitter (Sensor module + Electronic module)

Preamble

The performance characteristic of the transmitter refers to "Accuracy of the transmitter". The factors influencing accuracy can be divided into two groups
- Total performance of transmitter → 30
- Installation dependent influencing factors → 42

Total performance of transmitter

Transmitter total performance → 31comprises the reference accuracy and the ambient temperature effect and is calculated using the following formula:

Total performance	=	$\pm \sqrt{ (E1)^2 + (E2)^2 }$
E1	=	Reference accuracy → 30
E2	=	ambient temperature effect per ±28 °C (50 °F) (corresponds to the range of −3 to +53 °C (+27 to +127 °F)) → 32

Reference accuracy [E1]

Reference accuracy E1 as % [1] The specifications refer to the calibrated span/Upper Range Value (URV).			
Measuring cell	**PMP71**		**PMP75** [2]
	Standard Reference accuracy [3]	**Platinum** [4] **Reference accuracy**	**Standard Reference accuracy**
400 mbar (6 psi)	▪ TD 1:1 = ±0.05 ▪ TD > 1:1 = ±0.05 · TD	▪ TD 1:1 = ±0.025 ▪ TD > 1:1 = ±0.04	▪ TD 1:1 = ±0.15 ▪ TD > 1:1 = ±0.15 · TD
1 bar (15 psi)	▪ TD ≤ 2.5:1 = ±0.05 ▪ TD > 2.5:1 = ±0.02 · TD	▪ TD 1:1 = ±0.025 ▪ TD > 1:1 = ±0,03	▪ TD ≤ 2.5:1 = ±0.075 ▪ TD > 2.5:1 = ±0.03 · TD
2 bar (30 psi)	▪ TD ≤ 5:1 = ±0.05 ▪ TD > 5:1 = ±0.01 · TD	▪ TD 1:1 = ±0.025 ▪ TD > 1:1 = ±0,03	▪ TD ≤ 5:1 = ±0.075 ▪ TD > 5:1 = ±0.015 · TD
4 bar (60 psi)	▪ TD ≤ 10:1 = ±0.05 ▪ TD > 10:1 = ±0.005 · TD	▪ TD 1:1 = ±0.025 ▪ TD > 1:1 = ±0,03	▪ TD ≤ 10:1 = ±0.075 ▪ TD > 10:1 = ±0.0075 · TD
10 bar (150 psi)	▪ TD ≤ 10:1 = ±0.05 ▪ TD > 10:1 = ±0.005 · TD	▪ TD 1:1 = ±0.025 ▪ TD > 1:1 = ±0,03	▪ TD ≤ 10:1 = ±0.075 ▪ TD > 10:1 = ±0.0075 · TD
40 bar (600 psi)	▪ TD ≤ 10:1 = ±0.05 ▪ TD > 10:1 = ±0.005 · TD	▪ TD 1:1 = ±0.025 ▪ TD > 1:1 = ±0,03	▪ TD ≤ 10:1 = ±0.075 ▪ TD > 10:1 = ±0.0075 · TD
100 bar (1 500 psi)	▪ TD ≤ 10:1 = ±0.05 ▪ TD > 10:1 = ±0.005 · TD	▪ TD 1:1 = ±0.035 ▪ TD > 1:1 = ±0.04	▪ TD ≤ 10:1 = ±0.075 ▪ TD > 10:1 = ±0.0075 · TD
400 bar (6 000 psi)	▪ TD ≤ 5:1 = ±0.1 ▪ TD > 5:1 = ±0.02 · TD	▪ TD 1:1 = ±0.065 ▪ TD > 1:1 = ±0.09	▪ TD ≤ 5:1 = ±0.15 ▪ TD > 5:1 = ±0.03 · TD
700 bar (10 500 psi)	▪ TD ≤ 5:1 = ±0.1 ▪ TD > 5:1 = ±0.02 · TD	▪ TD 1:1 = ±0.065 ▪ TD > 1:1 = ±0.09	-

1) Reference accuracy comprises the non-linearity [DIN EN 61298-2] including the hysteresis [DIN EN 61298-2] and non-repeatability [DIN EN 61298-2] in accordance with the limit point method as per [DIN EN 60770]. Reference accuracy for standard up to TD 100:1, for platinum up to TD 5:1. Valid for all membrane materials.
2) PMP75: No diaphragm seal errors are taken into account. Diaphragm seal errors can be calculated separately in the Applicator diaphragm seal calculation module. Link to online tool Applicator: www.endress.com/applicator → Sizing Diaphragm Seal
3) PMP71 with 1-5V DC: for 400 mbar (6 psi) to 100 bar (1 500 psi) measuring cells, the values specified in the table must be multiplied by a factor of 2. For 400 bar (6 000 psi) and 700 bar (10 500 psi) measuring cells, the values specified in the table must be multiplied by a factor of 1.5.
4) Platinum version not for flush-mounted process connections G ½ and M20

Please refer to the next chapter “Detailed performance explanation and calculation” for further explanations on "Ambient temperature effect".

Total performance – Specification values

PMP71: Total performance as % The specifications refer to the calibrated span/Upper Range Value (URV).										
Measuring cell	Standard [1]					Platinum [1]				
	TD 1:1	TD 2:1	TD 3:1	TD 4:1	TD 5:1	TD 1:1	TD 2:1	TD 3:1	TD 4:1	TD 5:1
400 mbar (6 psi)	±0.18	±0.23	±0.29	±0.35	±0.41	±0.17	±0.21	±0.25	±0.29	±0.33
1 bar (15 psi)	±0.18	±0.22	±0.26	±0.30	±0.34	±0.17	±0.21	±0.25	±0.29	±0.33
2 bar (30 psi)	±0.18	±0.22	±0.25	±0.29	±0.33	±0.17	±0.21	±0.25	±0.29	±0.33
4 bar (60 psi)	±0.18	±0.22	±0.25	±0.29	±0.33	±0.17	±0.21	±0.25	±0.29	±0.33
10 bar (150 psi)	±0.12	±0.15	±0.18	±0.21	±0.24	±0.11	±0.14	±0.17	±0.20	±0.23
40 bar (600 psi)	±0.12	±0.15	±0.18	±0.21	±0.24	±0.11	±0.14	±0.17	±0.20	±0.23
100 bar (1 500 psi)	±0.13	±0.15	±0.16	±0.18	±0.19	±0.13	±0.15	±0.16	±0.17	±0.19
400 bar (6 000 psi)	±0.16	±0.17	±0.18	±0.20	±0.21	±0.14	±0.17	±0.18	±0.19	±0.21
700 bar (10 500 psi)	±0.16	±0.17	±0.18	±0.20	±0.21	±0.14	±0.17	±0.18	±0.19	±0.21

1) The specification values apply to the temperature range per ±28 °C (50 °F) (corresponds to the range of −3 to +53 °C (+27 to +127 °F)) for all measuring cells. The specification values apply to the analog output (i.e. including electronics errors). The specification values apply to gauge pressure and absolute pressure. The specification values apply to membrane material AISI 316L (1.4435).

Long-term stability

PMP71/PMP75: long-term stability as % The specifications refer to the upper range limit (URL) [1].			
Measuring cell	Standard & platinum		
	1 year	5 years	10 years
400 mbar (6 psi)	± 0.05	± 0.07	± 0.10
1 bar (15 psi)	± 0.05	± 0.07	± 0.10
2 bar (30 psi)	± 0.07	± 0.12	± 0.15
4 bar (60 psi)	± 0.05	± 0.07	± 0.10
10 bar (150 psi)	± 0.05	± 0.07	± 0.10
40 bar (600 psi)	± 0.05	± 0.07	± 0.10
100 bar (1 500 psi)	± 0.05	± 0.07	± 0.10
400 bar (6 000 psi)	± 0.05	± 0.07	± 0.10
700 bar (10 500 psi)	± 0.05	± 0.07	± 0.10

1) PMP75: No diaphragm seal errors are taken into account. Diaphragm seal errors can be calculated separately in the Applicator diaphragm seal calculation module. Link to online tool Applicator: www.endress.com/applicator → Sizing Diaphragm Seal

Detailed Performance Explanation and Calculation

To calculate the total performance outside the temperature range of −3 to +53 °C (+27 to +127 °F) or for a membrane material other than 1.4435/316L, please refer to the following sections: "Ambient temperature effect" and "Calculating the total performance" [1].

Ambient temperature effect [E2]

- $E2 = (E2_M \cdot CF_1) + E2_E + E2_{LT}$
- $E2_M$ = Main temperature error
- CF_1 = Temperature range correction factor
- $E2_E$ = Electronics error for analog output
- $E2_{LT}$ = low temperature error

$E2_M$ - Main temperature error

The output changes due to the effect of ambient temperature [IEC 61298-3] with respect to reference temperature [DIN 16086]. The values specify the maximum error due to min./max. ambient or process temperature conditions.

The specified error is applicable to the membrane material AISI 316L.

PMP71/PMP75: main temperature error $E2_M$ as % per ±28 °C (50 °F) (corresponds to the range of −3 to +53 °C (+27 to +127 °F)) The specifications refer to the calibrated span/Upper Range Value (URV).		
Measuring cell	**Standard**	**Platinum**
400 mbar (6 psi)	± (0.04 · TD + 0.08)	± (0.04 · TD + 0.08)
1 bar (15 psi)	± (0.04 · TD + 0.08)	± (0.04 · TD + 0.08)
2 bar (30 psi)	± (0.04 · TD + 0.08)	± (0.04 · TD + 0.08)
4 bar (60 psi)	± (0.04 · TD + 0.08)	± (0.04 · TD + 0.08)
10 bar (150 psi)	± (0.03 · TD + 0.03)	± (0.03 · TD + 0.03)
40 bar (600 psi)	± (0.03 · TD + 0.03)	± (0.03 · TD + 0.03)
100 bar (1 500 psi)	± (0.015 · TD + 0.06)	± (0.015 · TD + 0.06)
400 bar (6 000 psi)	± (0.015 · TD + 0.06)	± (0.015 · TD + 0.06)
700 bar (10 500 psi)	± (0.015 · TD + 0.06)	± (0.015 · TD + 0.06)

CF_1 - Temperature range correction factor

PMP71/PMP75: correction factor CF_1		
Measuring cell	**Temperature range**	**Factor, CF_1**
For all measuring cells	25 °C ± 28 °C (−3 to +53 °C (+27 to +127 °F))	1
	−32 to −4 °C (−26 to +25 °F) and +54 to +85 °C (+129 to +185 °F)	2
	−50 to −33 °C (−58 to −27 °F)	2.3

$E2_E$ - Electronics error

PMP71/PMP75: electronics error $E2_E$ as % The specifications refer to the calibrated span/Upper Range Value (URV).			
Measuring cell	**Electronics**	**Temperature range**	**Error [1]**
For all measuring cells	Analog output (4 to 20 mA)	−50 to +85 °C (−58 to +185 °F)	0.05
	Digital output (HART)	−50 to +85 °C (−58 to +185 °F)	0
	Digital output (PA/FF)	−40 to +85 °C (−40 to +185 °F)	0

1) PMP75: No diaphragm seal errors are taken into account. Diaphragm seal errors can be calculated separately in the Applicator diaphragm seal calculation module. Link to online tool Applicator: www.endress.com/applicator → Sizing Diaphragm Seal

PMP71/PMP75: electronics error $E2_E$ as % The specifications refer to the calibrated span/Upper Range Value (URV).			
Measuring cell	**Electronics**	**Temperature range**	**Error** [1]
	PMP71 with 1-5V DC	−3 to +53 °C (+27 to +127 °F)	0.18
	PMP71 with 1-5V DC	−40 to −4 °C (−40 to +25 °F) and +54 to +85 °C (+129 to +185 °F)	0,55

1) The additional electronics error that occurs in the temperature range −50 to −41 °C (−58 to −42 °F) is covered by $E2_{LT}$.

$E2_{LT}$ - low temperature error

PMP71/PMP75: low temperature error $E2_{LT}$ as % The specifications refer to the calibrated span/Upper Range Value (URV).		
Measuring cell	**Temperature range**	**Problem**
For all measuring cells	−40 to +85 °C (−40 to +185 °F)	0
	−50 to −41 °C (−58 to −42 °F)	1.5

Total error

Total error = total performance + long-term stability

Total performance as % of the set span with TD1:1 → 31

Long-term stability as % of the upper range limit (URL) → 31

PMP71: total error as % The specifications refer to the upper range limit (URL).						
Measuring cell	**Standard** [1]			**Platinum** [1]		
	1 year	**5 years**	**10 years**	**1 year**	**5 years**	**10 years**
400 mbar (6 psi)	± 0.23	± 0.25	± 0.28	± 0.22	± 0.24	± 0,27
1 bar (15 psi)	± 0.23	± 0.25	± 0.28	± 0.22	± 0.24	± 0,27
2 bar (30 psi)	± 0.25	± 0.30	± 0.33	± 0.24	± 0.29	± 0.32
4 bar (60 psi)	± 0.23	± 0.25	± 0.28	± 0.22	± 0.24	± 0,27
10 bar (150 psi)	± 0.17	± 0.19	± 0.22	± 0.16	± 0.18	± 0.21
40 bar (600 psi)	± 0.17	± 0.19	± 0.22	± 0.16	± 0.18	± 0.21
100 bar (1 500 psi)	± 0.18	± 0.20	± 0.23	± 0.18	± 0.20	± 0.23
400 bar (6 000 psi)	± 0.21	± 0.23	± 0.26	± 0.19	± 0.21	± 0.24
700 bar (10 500 psi)	± 0.21	± 0.23	± 0.26	± 0.19	± 0.21	± 0.24

1) The specification values apply to the temperature range per ±28 °C (50 °F) (corresponds to the range of −3 to +53 °C (+27 to +127 °F)) for all measuring cells. The specification values apply to the analog output (i.e. including electronics errors) and TD 1:1. The specifications values apply to gauge pressure and absolute pressure. The specification values apply to membrane material AISI 316L (1.4435), Alloy C 276.

Performance characteristics of PMC71 ceramic pressure transmitter (Sensor module + Electronic module)

Preamble

The performance characteristic of the transmitter refers to "Accuracy of the transmitter". The factors influencing accuracy can be divided into two groups
- Total performance of transmitter → 🖹 34
- Installation dependent influencing factors → 🖹 42

Total performance of transmitter

Transmitter total performance → 🖹 35 comprises the reference accuracy and the ambient temperature effect and is calculated using the following formula:

Total performance	=	$\pm \sqrt{((E1)^2 + (E2)^2)}$
E1	=	Reference accuracy → 🖹 34
E2	=	ambient temperature effect per ±28 °C (50 °F) (corresponds to the range of −3 to +53 °C (+27 to +127 °F)) → 🖹 36

Reference accuracy [E1]

PMC71: Reference accuracy E1 as % [1]
The specifications refer to the calibrated span/Upper Range Value (URV).

Measuring cell	Standard Reference accuracy	Platinum Reference accuracy
100 mbar (1.5 psi)	▪ TD ≤ 10:1 = ±0.075 ▪ TD > 10:1 = ±0.0075 · TD	▪ TD 1:1 = ±0.05 ▪ TD > 1:1 = ±0.075
250 mbar (3.75 psi)	▪ TD ≤ 10:1 = ±0.075 ▪ TD > 10:1 = ±0.0075 · TD	TD ≥ 1:1 = ±0.05
400 mbar (6 psi)	▪ TD ≤ 10:1 = ±0.05 ▪ TD > 10:1 = ±0.005 · TD	TD ≥ 1:1 = ±0.035
1 bar (15 psi)	▪ TD ≤ 10:1 = ±0.05 ▪ TD > 10:1 = ±0.005 · TD	TD ≥ 1:1 = ±0.035
2 bar (30 psi)	▪ TD ≤ 10:1 = ±0.05 ▪ TD > 10:1 = ±0.005 · TD	▪ TD 1:1 = ±0.025 ▪ TD ≥ 1:1 = ±0.035
4 bar (60 psi)	▪ TD ≤ 10:1 = ±0.05 ▪ TD > 10:1 = ±0.005 · TD	TD ≥ 1:1 = ±0.025
10 bar (150 psi)	▪ TD ≤ 10:1 = ±0.05 ▪ TD > 10:1 = ±0.005 · TD	TD ≥ 1:1 = ±0.035
40 bar (600 psi)	▪ TD ≤ 10:1 = ±0.05 ▪ TD > 10:1 = ±0.005 · TD	TD ≥ 1:1 = ±0.035

1) Reference accuracy comprises the non-linearity [DIN EN 61298-2] including the hysteresis [DIN EN 61298-2] and the non-repeatability [DIN EN 61298-2] in accordance with the limit point method as per [DIN EN 60770]. Reference accuracy for standard up to TD 100:1, for platinum up to TD 5:1.

Total performance – Specification values

PMC71: total performance as % The specifications refer to the calibrated span/Upper Range Value (URV).										
Measuring cell	Standard [1]					Platinum [1]				
	TD 1:1	TD 2:1	TD 3:1	TD 4:1	TD 5:1	TD 1:1	TD 2:1	TD 3:1	TD 4:1	TD 5:1
100 mbar (1.5 psi)	±0.17	±0.24	±0.31	±0.38	±0.44	±0.17	±0.24	±0.31	±0.38	±0.44
250 mbar (3.75 psi)	±0.17	±0.24	±0.31	±0.38	±0.44	±0.17	±0.23	±0.30	±0.37	±0.44
400 mbar (6 psi)	±0.17	±0.23	±0.30	±0.37	±0.44	±0.16	±0.23	±0.30	±0.37	±0.44
1 bar (15 psi)	±0.14	±0.21	±0.17	±0.33	±0.40	±0.14	±0.20	±0.27	±0.33	±0.40
2 bar (30 psi)	±0.14	±0.21	±0.27	±0.33	±0.40	±0.14	±0.20	±0.27	±0.33	±0.40
4 bar (60 psi)	±0.14	±0.21	±0.27	±0.33	±0.40	±0.14	±0.20	±0.27	±0.33	±0.40
10 bar (150 psi)	±0.14	±0.21	±0.27	±0.33	±0.40	±0.14	±0.20	±0.27	±0.33	±0.40
40 bar (600 psi)	±0.14	±0.21	±0.27	±0.33	±0.40	±0.14	±0.20	±0.27	±0.33	±0.40

1) The specification values apply to the temperature range per ±28 °C (50 °F) (corresponds to the range of −3 to +53 °C (+27 to +127 °F)) for all measuring cells. The specification values apply to the analog output (i.e. including electronics errors). The specification values apply to gauge pressure and absolute pressure.

Long-term stability

PMC71: long-term stability as % The specifications refer to the upper range limit (URL).						
Measuring cell	Gauge pressure			Absolute pressure		
	1 year	5 years	10 years	1 year	5 years	10 years
100 mbar (1.5 psi)	± 0.05	± 0.08	± 0.10	± 0.05	± 0.15	± 0.20
250 mbar (3.75 psi)	± 0.05	± 0.08	± 0.10	± 0.05	± 0.15	± 0.20
400 mbar (6 psi)	± 0.05	± 0.08	± 0.10	± 0.05	± 0.15	± 0.20
1 bar (15 psi)	± 0.05	± 0.08	± 0.10	± 0.05	± 0.15	± 0.20
2 bar (30 psi)	± 0.05	± 0.08	± 0.10	± 0.05	± 0.15	± 0.20
4 bar (60 psi)	± 0.05	± 0.08	± 0.10	± 0.05	± 0.15	± 0.20
10 bar (150 psi)	± 0.05	± 0.08	± 0.10	± 0.05	± 0.15	± 0.20
40 bar (600 psi)	± 0.05	± 0.08	± 0.10	± 0.05	± 0.15	± 0.20

Detailed Performance Explanation and Calculation

To calculate the total performance outside the temperature range of −3 to +53 °C (+27 to +127 °F), please refer to the following sections: "Ambient temperature effect" and "Calculating the total performance".

PMC71 standard version - Ambient temperature effect [E2]

- $E2 = (E2_M \cdot CF_1) + 0.05$
- $E2_M$ = Main temperature error
- CF_1 = Temperature range correction factor

$E2_M$ - Main temperature error

The output changes due to the effect of ambient temperature [IEC 61298-3] with respect to reference temperature [DIN 16086]. The values specify the maximum error due to min./max. ambient or process temperature conditions.

PMC71: main temperature error $E2_M$ as % per ±28 °C (50 °F) (corresponds to the range of −3 to +53 °C (+27 to +127 °F)) The specifications refer to the calibrated span/Upper Range Value (URV).		
Measuring cell	**Standard**	**Platinum**
100 mbar (1.5 psi)	± (0.07 · TD + 0.038)	± (0.07 · TD + 0.038)
250 mbar (3.75 psi)	± (0.07 · TD + 0.038)	± (0.07 · TD + 0.038)
400 mbar (6 psi)	± (0.07 · TD + 0.038)	± (0.07 · TD + 0.038)
1 bar (15 psi)	± (0.065 · TD + 0.02)	± (0.065 · TD + 0.02)
2 bar (30 psi)	± (0.065 · TD + 0.02)	± (0.065 · TD + 0.02)
4 bar (60 psi)	± (0.065 · TD + 0.02)	± (0.065 · TD + 0.02)
10 bar (150 psi)	± (0.065 · TD + 0.02)	± (0.065 · TD + 0.02)
40 bar (600 psi)	± (0.065 · TD + 0.02)	± (0.065 · TD + 0.02)

CF_1 - Temperature range correction factor

PMC71: correction factor CF_1		
Measuring cell	**Temperature range**	**Factor, CF_1**
100 mbar (1.5 psi) 250 mbar (3.75 psi) 400 mbar (6 psi) 1 bar (15 psi) 2 bar (30 psi) 4 bar (60 psi) 10 bar (150 psi) 40 bar (600 psi)	25 °C ± 28 °C (−3 to +53 °C (+27 to +127 °F))	1
	−20 to −4 °C (−4 to +25 °F) and +54 to +82 °C (+129 to +180 °F)	2.4
	+83 to +125 °C (+181 to +257 °F)	2.4

PMC71 high-temperature version - Ambient temperature effect [E2]

- E2 = $E2_M$
- $E2_M$ = Main temperature error

$E2_M$ - Main temperature error

The output changes due to the effect of ambient temperature [IEC 61298-3] with respect to reference temperature [DIN 16086]. The values specify the maximum error due to min./max. ambient or process temperature conditions.

PMC71 high-temperature version: main temperature error $E2_M$ as % for −10 to +60 °C (+14 to +140 °F) The specifications refer to the calibrated span/Upper Range Value (URV).		
Measuring cell	**Standard**	**Platinum**
100 mbar (1.5 psi)	± (0.088 · TD + 0.088)	± (0.088 · TD + 0.088)
250 mbar (3.75 psi)	± (0.088 · TD + 0.088)	± (0.088 · TD + 0.088)
400 mbar (6 psi)	± (0.088 · TD + 0.088)	± (0.088 · TD + 0.088)
1 bar (15 psi)	± (0.088 · TD + 0.04)	± (0.088 · TD + 0.04)
2 bar (30 psi)	± (0.088 · TD + 0.04)	± (0.088 · TD + 0.04)
4 bar (60 psi)	± (0.088 · TD + 0.04)	± (0.088 · TD + 0.04)
10 bar (150 psi)	± (0.088 · TD + 0.04)	± (0.088 · TD + 0.04)
40 bar (600 psi)	± (0.088 · TD + 0.04)	± (0.088 · TD + 0.04)

PMC71 high-temperature version: main temperature error $E2_M$ as % for +60 to +150 °C (+140 to +302 °F) The specifications refer to the calibrated span/Upper Range Value (URV).				
Measuring cell	**Standard**		**Platinum**	
	Gauge pressure	**Absolute pressure**	**Gauge pressure**	**Absolute pressure**
100 mbar (1.5 psi)	± (0.75 · TD)	± (1.25 · TD)	± (0.75 · TD)	± (1.25 · TD)
250 mbar (3.75 psi)	± (0.75 · TD)	± (0.75 · TD)	± (0.75 · TD)	± (0.75 · TD)
400 mbar (6 psi)	± (0.75 · TD)	± (0.75 · TD)	± (0.75 · TD)	± (0.75 · TD)
1 bar (15 psi)	± (0.50 · TD)	± (0.75 · TD)	± (0.50 · TD)	± (0.75 · TD)
2 bar (30 psi)	± (0.50 · TD)	± (0.75 · TD)	± (0.50 · TD)	± (0.75 · TD)
4 bar (60 psi)	± (0.50 · TD)	± (0.75 · TD)	± (0.50 · TD)	± (0.75 · TD)
10 bar (150 psi)	± (0.50 · TD)	± (0.75 · TD)	± (0.50 · TD)	± (0.75 · TD)
40 bar (600 psi)	± (0.50 · TD)	± (0.50 · TD)	± (0.50 · TD)	± (0.50 · TD)

Total error

Total error = total performance + long-term stability

Total performance as % of the set span with TD1:1 → 🖹 35

Long-term stability as % of the upper range limit (URL) → 🖹 35

PMC71: total error as % The specifications refer to the upper range limit (URL).						
Measuring cell	Gauge pressure - Standard [1]			Gauge pressure - platinum [1]		
	1 year	5 years	10 years	1 year	5 years	10 years
100 mbar (1.5 psi)	± 0.225	± 0.255	± 0.275	± 0.216	± 0.246	± 0.266
250 mbar (3.75 psi)	± 0.225	± 0.255	± 0.275	± 0.216	± 0.246	± 0.266
400 mbar (6 psi)	± 0.216	± 0.246	± 0.266	± 0.212	± 0.242	± 0.262
1 bar (15 psi)	± 0.194	± 0.224	± 0.244	± 0.189	± 0.219	± 0.239
2 bar (30 psi)	± 0.194	± 0.224	± 0.244	± 0.187	± 0.217	± 0.237
4 bar (60 psi)	± 0.194	± 0.224	± 0,240	± 0.187	± 0.217	± 0.237
10 bar (150 psi)	± 0.194	± 0.224	± 0.244	± 0.189	± 0.219	± 0.239
40 bar (600 psi)	± 0.194	± 0.224	± 0.244	± 0.189	± 0.219	± 0.239

1) The specification values apply to the temperature range per ±28 °C (50 °F) (corresponds to the range of −3 to +53 °C (+27 to +127 °F)) for all measuring cells. The specification values apply to the analog output (i.e. including electronics errors). The specification values apply to the standard version of the PMC71.

PMC71: total error as % The specifications refer to the upper range limit (URL).						
Measuring cell	Absolute pressure - Standard [1]			Absolute pressure - Platinum [1]		
	1 year	5 years	10 years	1 year	5 years	10 years
100 mbar (1.5 psi)	± 0.225	± 0.325	± 0.375	± 0.216	± 0.316	± 0.366
250 mbar (3.75 psi)	± 0.225	± 0.325	± 0.375	± 0.216	± 0.316	± 0.366
400 mbar (6 psi)	± 0.216	± 0.316	± 0.366	± 0.212	± 0.312	± 0.362
1 bar (15 psi)	± 0.194	± 0.294	± 0.344	± 0.189	± 0.289	± 0.339
2 bar (30 psi)	± 0.194	± 0.294	± 0.344	± 0.187	± 0.287	± 0.337
4 bar (60 psi)	± 0.194	± 0.294	± 0.344	± 0.187	± 0.287	± 0.337
10 bar (150 psi)	± 0.194	± 0.294	± 0.344	± 0.189	± 0.289	± 0.339
40 bar (600 psi)	± 0.194	± 0.294	± 0.344	± 0.189	± 0.289	± 0.339

1) The specification values apply to the temperature range per ±28 °C (50 °F) (corresponds to the range of −3 to +53 °C (+27 to +127 °F)) for all measuring cells. The specification values apply to the analog output (i.e. including electronics errors). The specification values apply to the standard version of the PMC71.

Performance characteristics - calculation example and additional information

Calculating the total performance in 4 steps

Data (example with PMP71)

Measuring Conditions / Device configuration	
Measuring range (URV)	5 bar (75 psi)
Min./max. temp. pressure transmitter (ambient/process)	Ambient temp.:0 to 45 °C (32 to 113 °F) Max. Process temp.:50 °C (122 °F)
Membrane material	AISI 316L
Reference accuracy (± 0.05%)	Standard
PMP71 - Suitable measuring cell (upper range limit, URL)	10 bar (150 psi) with TD 2:1
Output Signal	4 to 20 mA

Formula

Total performance	=	$\pm \sqrt{ (E1)^2 + (E2)^2 }$
E1	=	Reference accuracy → 🖹 30
E2	=	Ambient temperature effect per ±28 °C (50 °F) (corresponds to the range of −3 to +53 °C (+27 to +127 °F)) → 🖹 32

Calculation

Step 1: Calculating the turn down → 🖹 7			
Turn down (TD) = URL/ | URV - LRV |		=	10 bar (150 psi)/5 bar (75 psi)
		=	TD = 2:1
Step 2: Calculating the reference accuracy (E1) → 🖹 30			
For the measuring conditions,			
Reference accuracy, E1		=	± 0.05 (% of the set span)
		=	± (0.05/100) · 5 bar (75 psi)
		=	±0.0025 bar (0.03625 psi)
	E1	=	± 0.05 (% of the set span)
		(or)	±0.0025 bar (0.03625 psi)

Step 3: Calculation of the ambient temperature effect [$E2 = (E2_M \cdot CF_1) + E2_E + E2_{LT}$] → 32

For the measuring conditions, Main temperature error, $E2_M$	=	± (0.03 · TD + 0.03) % of the set span
Temperature correction factor, CF_1	=	1
Electronics error , $E2_E$	=	0.05 %
Low temperature error $E2_{LT}$	=	0 %
Ambient temperature effect, E2	=	± [(0.03 · TD + 0.03) · 1] + 0.05 + 0
	=	± [(0.03 · 2 + 0.03) · 1] + 0.05 + 0
	=	± 0.14 (% of the set span)
	=	± (0.14/100) · 5 bar (75 psi)
	=	±0.007 bar (0.1015 psi)
E2	=	± 0.14 (% of the set span)
	(or)	±0.007 bar (0.1015 psi)

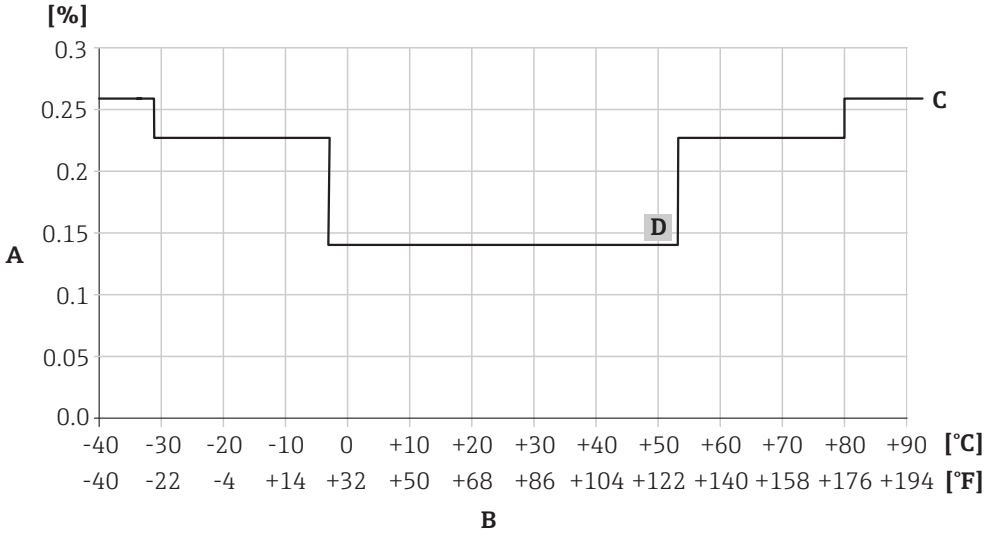

A Error (% of the set span)
B Temperature
C 316L process isolating diaphragm
D Ambient temperature effect: 0.14 (% of the set span)

Step 4: Calculation of the total performance

Total performance	=	$\pm \sqrt{((E1)^2 + (E2)^2)}$
		E1 = Reference accuracy E2 = Ambient temperature effect per ±28 °C (50 °F) (corresponds to the range of −3 to +53 °C (+27 to +127 °F))
Total performance, if calculated in mbar	=	$\pm \sqrt{((0.0025)^2 + (0.007)^2)}$
	=	± 0.0074 bar (0.1073 psi) or 7.4 mbar (0.1073 psi)
	~	0.149 % of 5 bar (75 psi)
	(or)	
Total performance, if calculated in % of the upper range limit	=	$\pm \sqrt{((0.05)^2 + (0.14^2))}$
	=	± 0.149 (% of the set span)
Total performance	=	± 0.149 (% of the set span)
	(or)	±0.0074 bar (0.1073 psi)

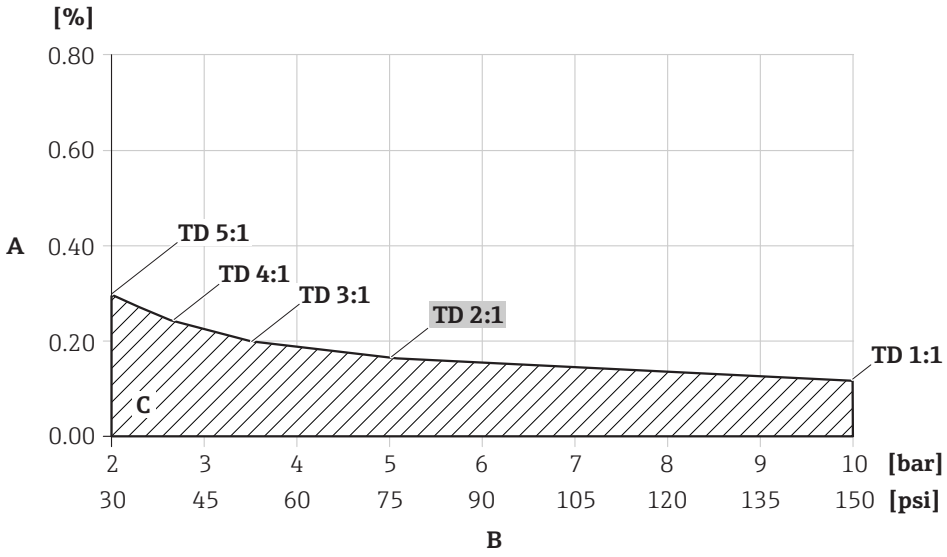

A Error (% of the set span)
B Set span [bar]
C Standard measuring cell

Installation factors

Some of the influencing factors are:
- Influence of installation position → 🖹 42
- Uncertainty of measurement for small absolute pressure ranges → 🖹 42

Influence of installation position

- PMP71: Device rotated 180°, process connection pointing upwards. The value is doubled for devices with inert oil.
  - Process connection thread G 1 A, G 1 ½, G 2, 1 ½ MNPT, 2 MNPT, M 44x1.25, EN/DIN, ASME and JIS flanges: ≤ 10 mbar (0.15 psi).
  - Process connection thread: G ½, ½ MNPT, JIS G ½, JIS R ½, M20x1.5: ≤ 4 mbar (0.06 psi).
- PMC71: ≤ 0.18 mbar (0.003 psi). Device rotated 180°, process connection pointing upwards.

A position-dependent zero point shift can be corrected. Please refer to operating instructions and chapter Commissioning → Position adjustment.

Different tightening torques (e.g. for Clamp or Varivent connections) can merely cause a shift in the zero point. This effect is corrected by position adjustment during commissioning.

Uncertainty of measurement for small absolute pressure ranges

The smallest expanded uncertainty of measurement that can be returned by our calibration standards is:
- in the range 1 to 30 mbar (0.0145 to 0.435 psi): 0.4 % of (current) reading
- in the range < 1 mbar (0.0145 psi): 1 % of (current) reading.

Performance Characteristics Conformance

All performance characteristics are in conformance to ≥ ± 3 sigma.

Resolution

Current output: 1 µA

Voltage output: 1 mW

Warm-up period

- 4 to 20 mA HART: < 10 s
- PROFIBUS PA: 6 s
- FOUNDATION Fieldbus: 50 s

Reference operating conditions

- As per IEC 60770
- Ambient temperature T_A = constant, in the range +21 to +33 °C (+70 to +91 °F)
- Humidity φ = constant, in the range: 5 to 80 % RH ± 5 %
- Ambient pressure p_A = constant, in range: 860 to 1060 mbar (12.47 to 15.37 psi)
- Position of measuring cell: horizontal ±1° (see also "Influence of installation position" section→ 🖹 42)
- Input of LOW SENSOR TRIM and HIGH SENSOR TRIM for lower range value and upper range value
- Zero based span
- Membrane material PMC71: Al_2O_3 aluminum oxide ceramic FDA, ultrapure 99.9 %
- Membrane material PMP71/PMP75: AISI 316L (1.4435) or Alloy C
- Filling oil PMP71/PMP75: silicone oil
- Supply voltage: 24 V DC ±3 V DC
- Load with HART: 250 Ω
- Turn down (TD) = URL/ | URV - LRV |

Installation

General installation instructions

- For PMP75: → 🖹 110 "Installation instructions" section.
- A position-dependent zero point shift can be corrected directly at the device via operating keys, and also in hazardous areas in the case of devices with external operation.
  Diaphragm seals also shift the zero point, depending on the installation position → 🖹 113.
- The device housing can be rotated up to 380°.
- Endress+Hauser offers a mounting bracket for installing the device on pipes or walls → 🖹 44.
- Use flushing rings for flange and cell diaphragm seals if buildup or clogging can be expected at the diaphragm seal connection. The flushing ring can be fitted between the process connection and diaphragm seal. Material buildup in front of the process isolating diaphragm can be flushed away, and the pressure chamber vented, via the two lateral flushing holes.
- When measuring in media containing solids, such as dirty liquids, installing separators and drain valves is useful for capturing and removing sediment.
- Point the cable and connector downwards where possible to prevent moisture from entering (e.g. rain or condensation water).

Measuring arrangement for devices without diaphragm seals – PMC71, PMP71

Cerabar S devices without diaphragm seals are mounted in accordance with the same guidelines as a manometer (DIN EN 837-2). We recommend the use of shutoff devices and siphons. The orientation depends on the measuring application.

Pressure measurement in gases

Mount the Cerabar S with shutoff device above the tapping point so that any condensate can flow into the process.

Pressure measurement in vapors

Use siphons for pressure measurement in steam. The siphon reduces the temperature to almost ambient temperature. Fill the siphon with liquid before commissioning. Preferably mount the Cerabar S with the siphon below the tapping point.

Advantages:
- defined water column only causes minimal/negligible measured errors
- only minimal/negligible thermal effects on the device

Mounting above the tapping point is also possible. Note the max. permitted ambient temperature of the transmitter!

Pressure measurement in liquids

Mount the Cerabar S with shutoff device below or at the same level as the tapping point.

Level measurement

- Mount the Cerabar S below the lowest measuring point.
- Do not install the device in the following positions: In the filling curtain, in the tank outlet or at a point in the container which could be affected by pressure pulses from an agitator or a pump.
- The calibration and functional test can be carried out more easily if you mount the device downstream from a shutoff device.

Measuring arrangement for devices with diaphragm seals – PMP75

→ 🖹 110

Orientation

The orientation may cause a zero point shift, see → 🖹 42.

This position-dependent zero point shift can be corrected directly at the device via the operating key, and also in hazardous areas in the case of devices with external operation (position adjustment).

Wall and pipe mounting, transmitter (optional)

Endress+Hauser offers the following mounting bracket for installing the device on pipes or walls:

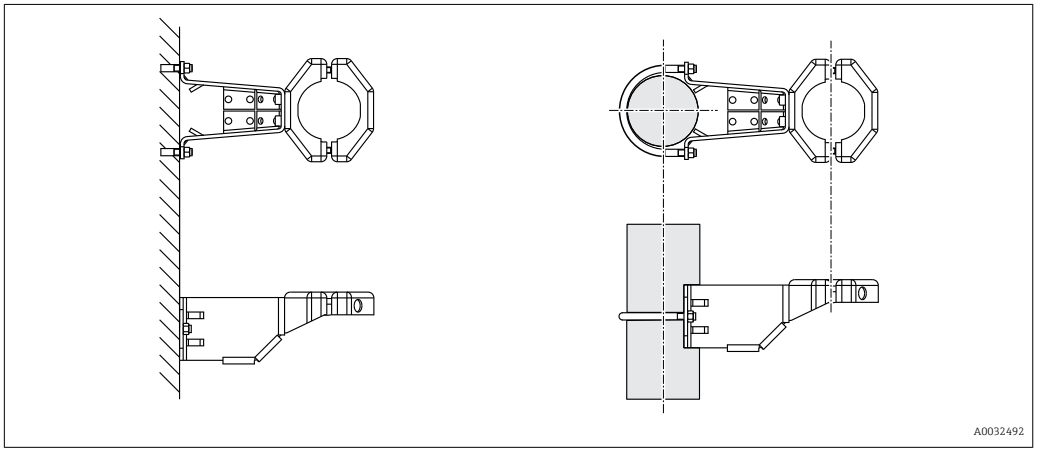

Ordering information:
- Product Configurator, order code for "Accessories enclosed", option "PA"
- For devices with separate housing (can be ordered using the order code "Additional options 2") included in the scope of delivery
- Can be ordered as a separate accessory (part no.: 71102216).

For further details, see → 97.

Wall and pipe mounting, valve manifold (optional)

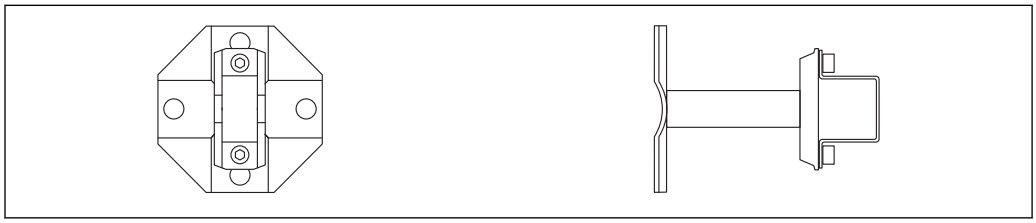

For the technical data (such as the dimensions or order numbers for screws), see the document SD01553P/00/EN.

Ordering information:

Product Configurator, order code for "Accessories enclosed", option "PK"

Heat insulation – PMC71 high-temperature version

The PMC71 high-temperature version must only be insulated up to a certain height. The maximum permitted insulation height is indicated on the devices and applies to an insulation material with a heat conductivity ≤ 0.04 W/(m x K) and to the maximum permitted ambient and process temperature (see table below). The data were determined under the most critical application "quiescent air".

The data were determined under the most critical application "quiescent air".

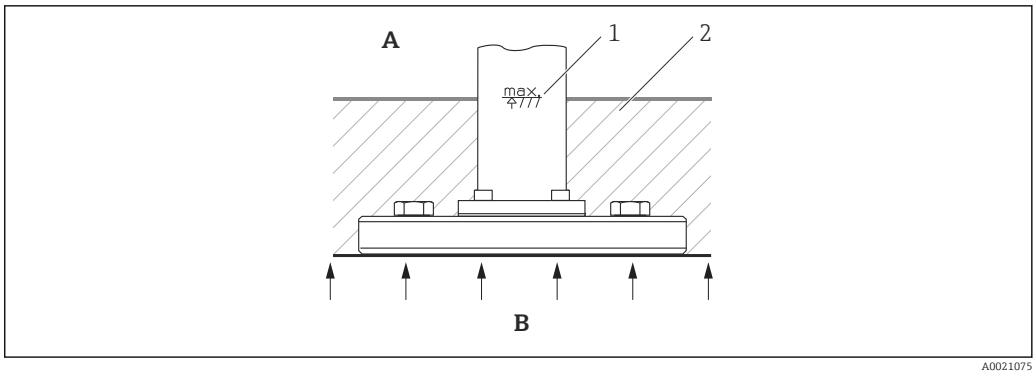

A0021075

A Ambient temperature
B Process temperature
1 Insulation height
2 Insulation material

	Temperature
Ambient temperature	≤ 70 °C (158 °F)
Process temperature	≤ 150 °C (302 °F)

Mounting of PVDF screw-in fittings

⚠ WARNING

Risk of damage to process connection!
Risk of injury!
- ▶ PVDF process connections with threaded connections must be installed with the enclosed mounting bracket!

The mounting bracket can be installed on pipes with a diameter of 1¼" to 2" or on walls.

Dimensions → 🖹 54.

"Separate housing" version

With the "separate housing" version, you are able to mount the housing with the electronics insert at a distance from the measuring point. This version facilitates trouble-free measurement
- Under particularly difficult measuring conditions (at installation locations that are cramped or difficult to access)
- If rapid cleaning of the measuring point is required and
- If the measuring point is exposed to vibrations.

You can choose between different cable versions:
- PE: 2 m (6.6 ft), 5 m (16 ft) and 10 m (33 ft)
- FEP: 5 m (16 ft).

Ordering information: Product Configurator, order code for "Additional options 2", version "G".

Dimensions → 🖹 97

In the case of the "separate housing" version, the sensor is delivered with the process connection and cable ready mounted. The housing and a mounting bracket are enclosed as separate units. The cable is provided with a socket at both ends. These sockets are simply connected to the housing and the sensor.

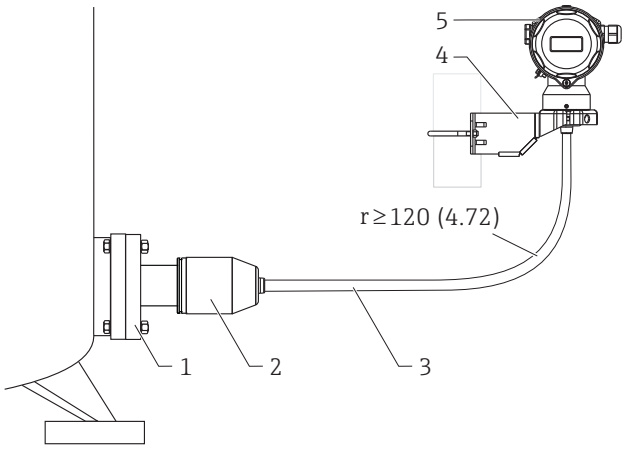

1 Process connection with sensor - For degrees of protection, see the following section
2 Process connection adapter (weight: 0.93 kg (2.05 lb))
3 Cable (weight: 0.05 kg/meter (0.11 lb)), both ends are fitted with a socket
4 Mounting bracket provided, suitable for pipe and wall mounting
5 Housing with electronic insert - degrees of protection → 🖹 55

Engineering unit mm (in)

Degree of protection for the process connection and sensor with the use of
- FEP cable:
  - IP 69 [2)]
  - IP 66 NEMA 4/6P
  - IP 68 (1.83 mH_2O for 24 h) NEMA 4/6P
- PE cable:
  - IP 66 NEMA 4/6P
  - IP 68 (1.83 mH_2O for 24 h) NEMA 4/6P

Technical data of the PE and FEP cable:
- Minimum bending radius: 120 mm (4.72 in)
- Cable extraction force: max. 450 N (101.16 lbf)
- Resistance to UV light

Use in hazardous area:
- Intrinsically safe installations (Ex ia/IS)
- FM/CSA IS: for Div. 1 installation only

2) Designation of the IP protection class according to DIN EN 60529. Previous designation "IP69K" according to DIN 40050 Part 9 is no longer valid (standard withdrawn on November 1, 2012). The tests required by both standards are identical.

Reduction of the installation height

If the separate housing is used, the installation height of the process connection is reduced compared to the dimensions of the standard version.

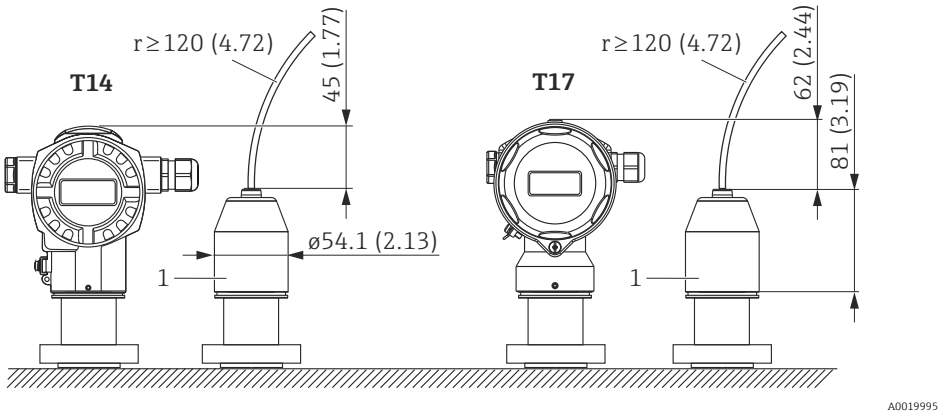

1 Process connection adapter

Engineering unit mm (in)

Turning the housing

The housing can be rotated up to 380° by loosening the Allen screw.

Your benefits

- Easy mounting due to optimum alignment of housing
- Good, accessible device operation
- Optimum readability of the onsite display (optional).

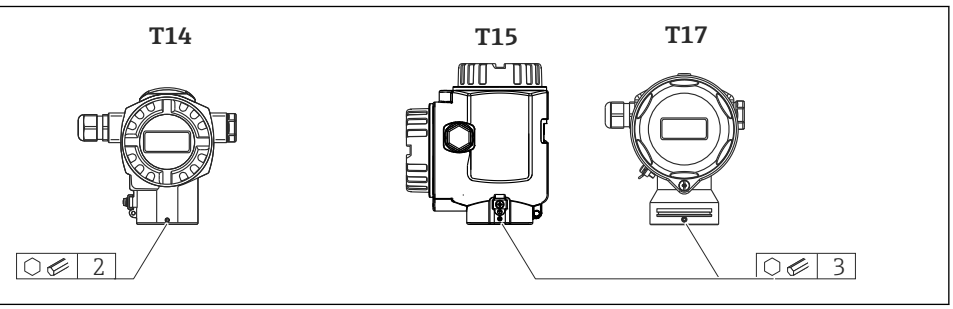

Oxygen applications

Oxygen and other gases can react explosively to oils, grease and plastics, such that, among other things, the following precautions must be taken:
- All components of the system, such as measuring devices, must be cleaned in accordance with the BAM (DIN 19247) requirements.
- Dependent on the materials used, a certain maximum temperature and a maximum pressure for oxygen applications must not be exceeded.

The devices suitable for gaseous oxygen applications are listed in the following table with the specification p_{max}.

HB = Cleaned for oxygen service

Order code for devices [1], cleaned for oxygen applications	p_{max} for oxygen applications	T_{max} for oxygen applications
PMC71 – * * * * * * ** 2 * * or PMC71 – * * * * * * ** A * * HB, Devices with sensors, nominal value < 10 bar (150 psi)	Over pressure limit (OPL) [2] [3] of sensor	60 °C (140 °F)
PMC71 – * * * * * * ** 2 * *, PMC71 – * * * * * * ** A * * HB, Devices with sensors, nominal value ≥ 10 bar (150 psi)	60 bar (900 psi)	60 °C (140 °F)
PMP71 – * * * * * * * ** N * * or PMP71 – * * * * * * * ** F * * HB	depends on the lowest-rated element, with regard to pressure, of the selected components: over pressure limit (OPL) of the sensor, process connection (1.5 x PN) or fill fluid (160 bar (2 400 psi))	85 °C (185 °F)
PMP75 – * * * * * * * * ** N * * or PMP75 – * * * * * * * * ** F * * HB	depends on the lowest-rated element, with regard to pressure, of the selected components: over pressure limit (OPL) of the sensor, process connection (1.5 x PN) or fill fluid (160 bar (2 400 psi))	85 °C (185 °F)

1) Devices only, not accessories or enclosed accessories.
2) Product Configurator, order code for "Sensor range; sensor over pressure limit (= OPL)"
3) PMC71 with PVDF threaded connection: Only mount with the enclosed mounting bracket. MWP 10 bar (150 psi), OPL max. 15 bar (225 psi). Process temperature range−10 to +60 °C (+14 to +140 °F)

PWIS-free applications

Special cleaning of the transmitter to remove paint-wetting substances, for use in paint shops, for instance.

Ordering information:

Product Configurator, order code for "Seal", option "L" or "M".

Ultrapure gas applications

Endress+Hauser also offers devices for special applications, such as ultrapure gas, cleaned from oil and grease. No special restrictions regarding the process conditions apply to these devices.

Ordering information:
- Product Configurator, order code for "Seal" or
- Product Configurator, order code for "Fill fluid".

Applications with hydrogen

A **ceramic** process isolating diaphragm or a **gold-plated** metal process isolating diaphragm offers universal protection against hydrogen diffusion, both in gas applications and in applications with aqueous solutions.

Applications with hydrogen in aqueous solutions

A **gold/rhodium-plated** metal process isolating diaphragm (AU/Rh) offers effective protection against hydrogen diffusion.

Environment

Ambient temperature range

Version	PMC71 High-temperature version	PMC71	PMP71	PMP75
Without LCD display	−20 to +70 °C (−4 to +158 °F)	−40 to +85 °C (−40 to +185 °F)	−50 to +85 °C (−58 to +185 °F) [1]	
With LCD display [2]		−20 to +70 °C (−4 to +158 °F)		
With M12 connector, elbowed		−25 to +85 °C (−13 to +185 °F)		
With separate housing	–	−20 to +60 °C (−4 to +140 °F)		–
Diaphragm seal systems [3]	–	–	–	→ 🖹 110
MID parts certificate	–	–	−25 to +55 °C (−13 to +131 °F)	–

1) If the temperature is below −40 °C (−40 °F), chances of failure increases. Product Configurator, order code for "Test, certificate" option "JN".
2) Extended temperature application range (−50 to +85 °C (−58 to +185 °F)) with restrictions in optical properties, such as display speed and contrast
3) Ambient temperature range and process temperature range are mutually dependent - see "Heat insulation" section → 🖹 114

For high-temperature applications, either a PMP75 with a temperature isolator or with a capillary can be used. If vibrations also occur in the application, Endress+Hauser recommends using a PMP75 with a capillary. If a PMP75 with a temperature isolator or capillary is used, we recommend a suitable bracket for mounting (see "Wall and pipe mounting" section).→ 🖹 44

Hazardous areas

- For devices for use in hazardous areas, see Safety Instructions, Installation or Control Drawing→ 🖹 127.
- Pressure measuring devices that have the usual explosion protection certificates (e.g. ATEX-/ CSA-/ FM-/ IEC Ex,...) can be used in hazardous areas at ambient temperatures down to −50 °C (−58 °F). The functionality of the explosion protection is also guaranteed for ambient temperatures down to −50 °C (−58 °F).

Storage temperature range

- −40 to +90 °C (−40 to +194 °F)
- Local display: −40 to +85 °C (−40 to +185 °F)
- Separate housing:−40 to +60 °C (−40 to +140 °F)
- Devices with PVC-sheathed capillary: −25 to +90 °C (−13 to +194 °F)

Degree of protection

Depends on the deployed
- Housing → 🖹 55
- Separate housing → 🖹 46

Climate class

Class 4K4H (air temperature: −20 to +55 °C (−4 to +131 °F), relative humidity: 4 to 100 %) fulfilled as per DIN EN 60721-3-4 (condensation possible. With PMC71, avoid condensate in the device.)

Electromagnetic compatibility

- Electromagnetic compatibility as per EN 61326 and NAMUR recommendation EMC (NE21).
- With enhanced immunity against electromagnetic fields as per EN 61000-4-3: 30 V/m with closed cover (for devices with T14 housing)
  Increased interference immunity with 30 V/m not available for 1-5V DC. EMC interference immunity for 1-5V DC: 10 V/m
- Maximum deviation: < 0.5 % of span
- All EMC measurements were performed with a turn down (TD) = 2:1.
- Class E3 as per OIML R75-2

For further details refer to the Declaration of Conformity.

Vibration resistance

Device/accessory	Test standard	Vibration resistance
PMC71 [1]	GL	Guaranteed for 3 to 25 Hz: ±1.6 mm (0.063 in); 25 to 100 Hz: 4 g in all 3 planes
PMP71		
PMP75 [2] [3]		
With mounting bracket	IEC 61298-3	Guaranteed for 10 to 60 Hz: ±0.15 mm (0.0059 in); 60 to 500 Hz: 2 g in all 3 planes
PMP71 with MID parts certificate	OIML R117-1	Class M3

1) Not for high-temperature version with Ex d[ia], CSA XP or FM XP
2) With aluminum T14 housing only
3) For applications with very high temperatures, a PMP75 with either a temperature isolator or a capillary can be used. If vibrations also occur in the application, Endress+Hauser recommends using a PMP75 with a capillary. If a PMP75 with a temperature isolator or capillary is used, it must be mounted with a mounting bracket

Process

Process temperature limits

For oxygen applications, observe → 📄 48

PMC71 (with ceramic process isolating diaphragm)

- −25 to +125 °C (−13 to +257 °F)
- High-temperature version: −25 to +150 °C (−13 to +302 °F); Product Configurator, order code for "Additional options 1", version "T".
- For saturated steam applications, use a device with a metal process isolating diaphragm, or provide a siphon for temperature isolation when installing.
- Observe the process temperature range of the seal in the following table.

Seal	Notes	Process temperature range	Option [1]
FKM Viton	–	−25 to +125 °C (−13 to +257 °F)/ 150 °C (302 °F) [2]	A, L
EPDM	FDA 21CFR177.2600; 3A Class II; USP Class VI DVGW (KTW, W270, W534), WRAS, ACS, NSF61	−20 to +125 °C (−4 to +257 °F)/ 150 °C (302 °F) [2]	B
FFKM Perlast G75LT	–	−20 to +125 °C (−4 to +257 °F)/ 150 °C (302 °F) [2]	C
Kalrez, Compound 4079	–	+5 to +125 °C (+41 to +257 °F)/ 150 °C (302 °F) [2]	D, M
Chemraz, Compound 505	–	−10 to +125 °C (+14 to +257 °F)/ 150 °C (302 °F) [2]	E
HNBR	FDA 21CFR177.2600; 3A Class II; KTW; AFNOR; BAM	−25 to +125 °C (−13 to +257 °F)	F [3]
NBR	–	−10 to +100 °C (+14 to +212 °F)	F
FKM Viton	FDA 21CFR177.2600	−5 to +125 °C (+23 to +257 °F)	G
FKM Viton	cleaned of oil and grease	−10 to +125 °C (+14 to +257 °F)/ 150 °C (302 °F) [2]	1
FKM Viton	cleaned for oxygen service	−10 to +60 °C (+14 to +140 °F)	2 or A [4]
The process temperature ranges specified here refer to permanent application of the PMC71. They may be exceeded for a short time (e.g. for cleaning).			

1) Product Configurator, order code for "Seal"
2) 150 °C (302 °F) for high-temperature version
3) These seals are used for devices with 3A-approved process connections.
4) with option "HB", see Product Configurator, order code for "Service"

Applications with jumps in temperature

Extreme jumps in temperature can result in temporary measuring errors. Temperature compensation takes effect after several minutes. Internal temperature compensation is faster the smaller the jump in temperature and the longer the time interval involved.

For further information please contact your local Endress+Hauser Sales Center.

PMP71 (with metallic process isolating diaphragm)

Designation	Limits
Process connections with internal process isolating diaphragm	−40 to +125 °C (−40 to +257 °F) (150 °C (302 °F) for max. one hour)
Process connections with flush-mounted process isolating diaphragm,	−40 to +100 °C (−40 to +212 °F)

PMP71 (with metallic process isolating diaphragm) with MID parts certificate

−25 to +55 °C (−13 to +131 °F)

PMP75 (with diaphragm seal)

- Depending on the design and depending on the diaphragm seal and filling oil: −70 °C (−94 °F) up to +400 °C (+752 °F). Observe temperature application limits of diaphragm seal oil → 113.
- Please observe the maximum gauge pressure and maximum temperature.

Devices with PTFE-coated process isolating diaphragm

The non-stick coating has excellent gliding properties and is used to protect the process isolating diaphragm against abrasive media.

NOTICE

Incorrect use of the PTFE foil will destroy the device!

► The PTFE foil used is designed to protect the unit against abrasion. It does not provide protection against corrosive media.

For the range of application of the 0.25 mm (0.01 in) PTFE foil on an AISI 316L (1.4404/1.4435) process isolating diaphragm, see the following diagram:

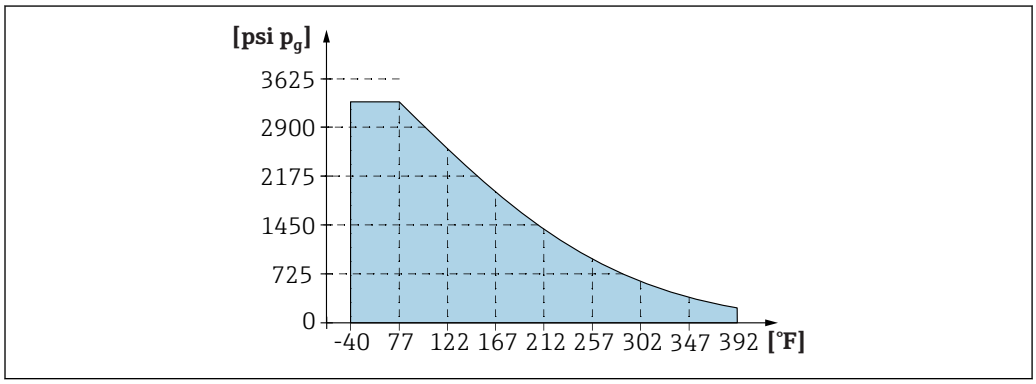

A0026949-EN

For vacuum applications: p_{abs} ≤ 1 bar (14.5 psi) to 0.05 bar (0.725 psi) up to max. +150 °C (302 °F).

Process temperature limits of capillary armoring: PMP75

- 316L: No restrictions
- PTFE: No restrictions
- PVC: See the following diagram

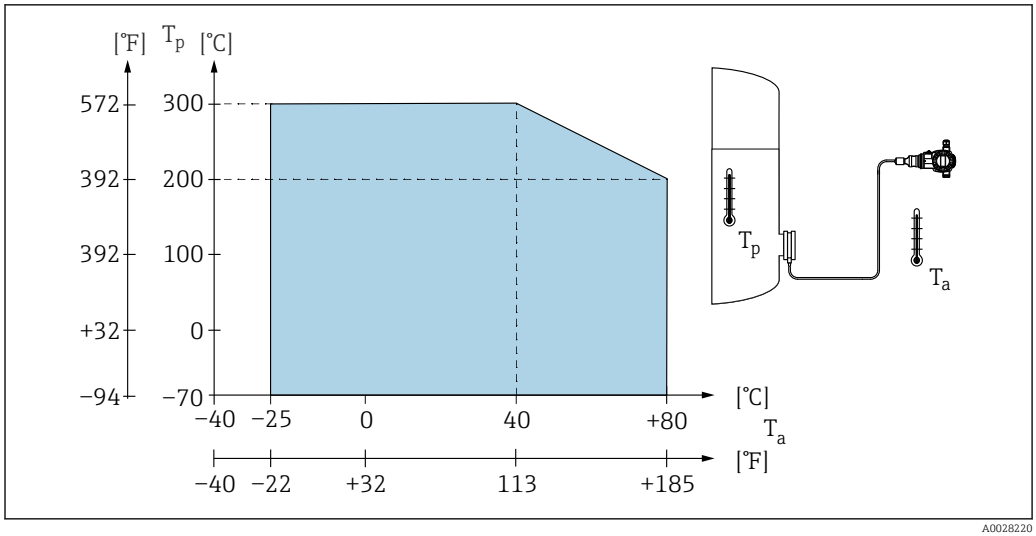

A0028220

Pressure specifications

⚠ WARNING

The maximum pressure for the measuring device depends on the lowest-rated element with regard to pressure.

- For pressure specifications, see the "Measuring range" section and the "Mechanical construction" section.
- The measuring device must be operated only within the specified limits!
- MWP (maximum working pressure): The MWP (maximum working pressure) is specified on the nameplate. This value refers to a reference temperature of +20 °C (+68°F) and may be applied to the device for an unlimited time. Observe temperature dependency of the MWP. The pressure values permitted at higher temperatures can be found in the standards EN 1092-1: 2001 Tab. 18 (With regard to their stability-temperature property, the materials 1.4435 and 1.4404 are grouped together under 13EO in EN 1092-1 Tab. 18. The chemical composition of the two materials can be identical.), ASME B 16.5a – 1998 Tab. 2-2.2 F316, ASME B 16.5a – 1998 Tab. 2.3.8 N10276, JIS B 2220.
- The test pressure corresponds to the over pressure limit of the individual sensors (OPL = 1.5 x MWP (formula does not apply to the PMP71 or PMP75 with a 40 bar (600 psi) or 100 bar (1500 psi) measuring cell)) and may be applied only for a limited period of time to prevent any lasting damage.
- The Pressure Equipment Directive (2014/68/EU) uses the abbreviation "PS". The abbreviation "PS" corresponds to the MWP (maximum working pressure) of the measuring device.
- In the case of sensor range and process connections where the over pressure limit (OPL) of the process connection is smaller than the nominal value of the sensor, the device is set at the factory, at the very maximum, to the OPL value of the process connection. If you want to use the entire sensor range, select a process connection with a higher OPL value (1.5 x PN; MWP = PN)
- In oxygen applications, the values for "p_{max} and T_{max} for oxygen applications must not be exceeded→ 🖹 48.
- Devices with ceramic process isolating diaphragm: avoid steam hammering! Steam hammering can cause zero point drifts. Recommendation: Residue (water droplets or condensation) may remain on the process isolating diaphragm following SIP cleaning and can result in local steam hammering the next time steam cleaning takes place. In practice, drying the process isolating diaphragm (e.g. by blowing) has proved to prevent steam hammering.

Mechanical construction

Device height

The device height is calculated from

- the height of the housing
- the height of optional mounted parts such as temperature isolators or capillaries
- the height of the relevant process connection.

The individual heights of the components can be found in the following sections. To calculate the device height, simply add up the individual heights of the components. If necessary, the installation space (the space used to install the device) must also be taken into account. You can use the following table for this:

Section	Page	Height	Example
Height of housing	→ 55 ff.	(A)	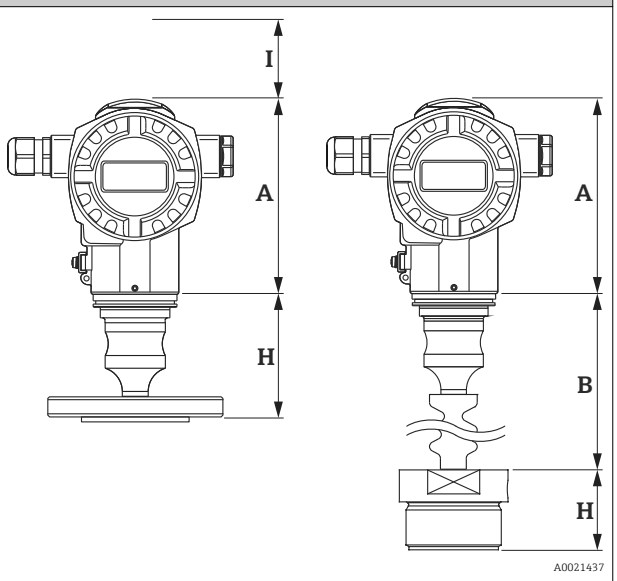
Optional mounted parts	→ 59	(B)	
Process connections	→ 59	(H)	
Installation space	-	(I)	
Device height			

T14 housing, optional display on the side

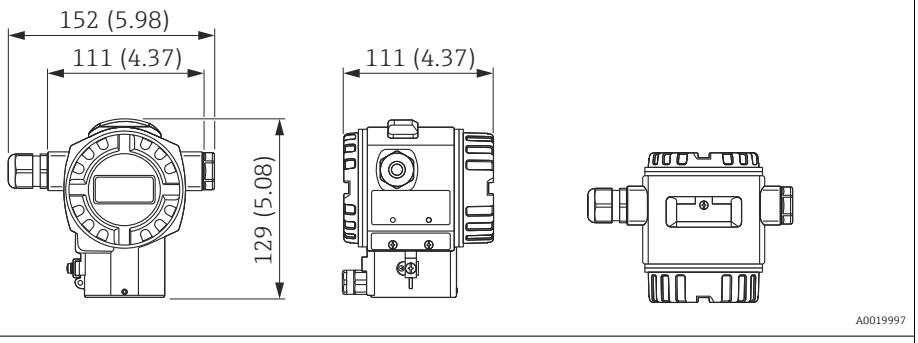

Engineering unit mm (in). Front view, left-hand side view, top view

Material		Degree of protection	Cable entry	Weight in kg (lb)		Option [1]
Housing	Cover seal			with display	without display	
Aluminum	EPDM	IP66/67 NEMA 6P	M20 gland	1.2 (2.65)	1.1 (2.43)	A
		IP66/67 NEMA 6P	G ½" thread			B
		IP66/67 NEMA 6P	NPT ½" thread			C
		IP66/67 NEMA 6P	M12 plug			D
		IP66/67 NEMA 6P	7/8" plug			E
		IP65 NEMA 4	HAN7D plug 90 degrees			F
316L	EPDM	IP66/67 NEMA 6P	M20 gland	2.1 (4.63)	2.0 (4.41)	1
		IP66/67 NEMA 6P	G ½" thread			2
		IP66/67 NEMA 6P	NPT ½" thread			3
		IP66/67 NEMA 6P	M12 plug			4
		IP66/67 NEMA 6P	7/8" plug			5
		IP65 NEMA 4	HAN7D plug 90 degrees			6
	FVMQ	IP66/67 NEMA 6P	M20 gland			7
	FVMQ	IP66/67 NEMA 6P	NPT ½" thread			8

1) Product Configurator, order code for "Housing, cover seal, cable entry, degree of protection"

T17 housing (hygienic), optional display on the side

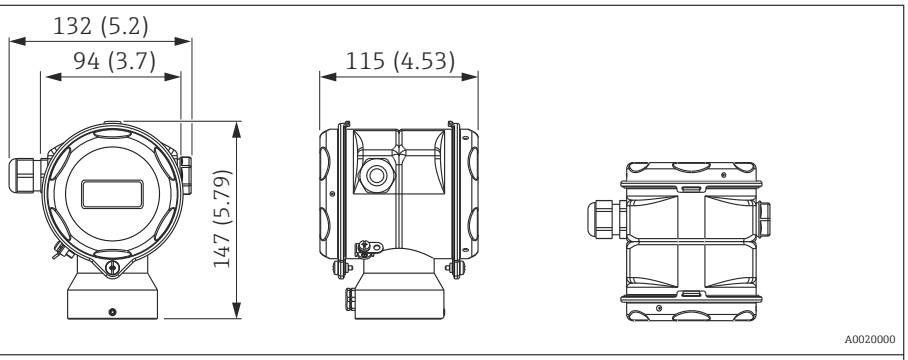

Engineering unit mm (in). Front view, left-hand side view, top view

Material		Degree of protection [1]	Cable entry	Weight in kg (lb)		Option [2]
Housing	Cover seal			with display	without display	
316L	EPDM	IP66/68 NEMA 6P	M20 gland	1.2 (2.65)	1.1 (2.43)	R
		IP66/68 NEMA 6P	G ½" thread			S
		IP66/68 NEMA 6P	NPT ½" thread			T
		IP66/68 NEMA 6P	M12 plug			U
		IP66/68 NEMA 6P	7/8" plug			V

1) Degree of protection IP 68: 1.83 mH_2O for 24 h
2) Product Configurator, order code for "Housing, cover seal, cable entry, degree of protection"

Process connections for PMC71 with internal process isolating diaphragm

Threaded connection ISO 228 G

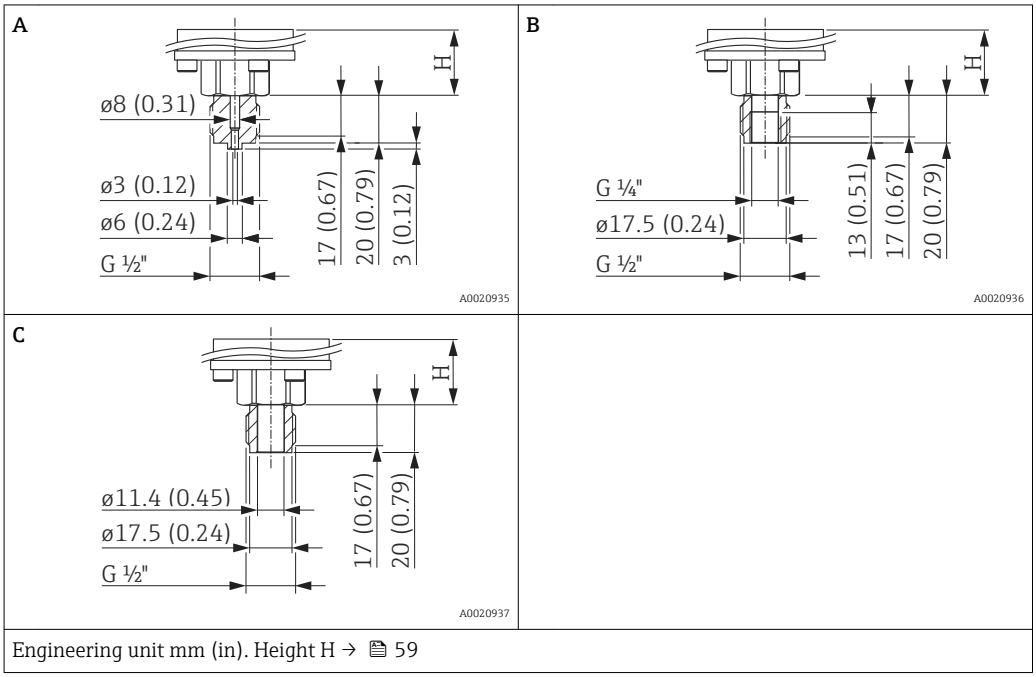

Engineering unit mm (in). Height H → 🖹 59

Item	Description	Material	Weight	Approval [1]	Option [2]
			kg (lb)		
A	Thread ISO 228 G ½" A EN 837	AISI 316L	0.63 (1.39)	CRN	GA
		Alloy C276 (2.4819)		CRN	GB
		Monel (2.4360)		-	GC
		PVDF ▪ Only mount with a mounting bracket (included) ▪ MWP 10 bar (150 psi), OPL max. 15 bar (225 psi) ▪ Process temperature range: −10 to +60 °C (+14 to +140 °F)		-	GD
B	Thread ISO 228 G ½" A, G ¼" (internal)	AISI 316L		CRN	GE
		Alloy C276 (2.4819)		CRN	GF
		Monel (2.4360)		-	GG
C	Thread ISO 228 G ½" A, Hole11.4 mm (0.45 in)	AISI 316L		CRN	GH
		Alloy C276 (2.4819)		CRN	GJ
		Monel (2.4360)		-	GK

1) CSA approval: Product Configurator, order code for "Approval"
2) Product Configurator, order code for "Process connection"

Threaded connection ANSI

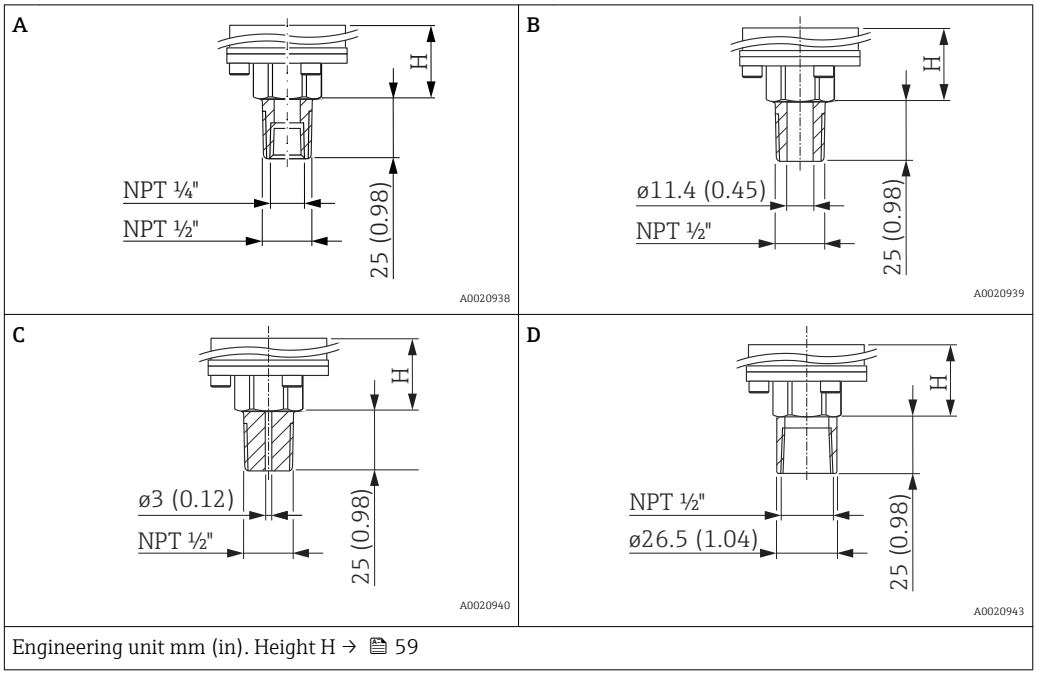

Engineering unit mm (in). Height H → 🖹 59

Item	Description	Material	Weight	Approval [1]	Option [2]
			kg (lb)		
A	ANSI ½" MNPT, ¼" FNPT	AISI 316L	0.63 (1.39)	CRN	RA
		Alloy C276 (2.4819)		CRN	RB
		Monel (2.4360)		-	RC
B	ANSI ½" MNPT, Hole11.4 mm (0.45 in)	AISI 316L		CRN	RD
		Alloy C276 (2.4819)		CRN	RE
		Monel (2.4360)		-	RF
C	ANSI ½" MNPT, Hole3 mm (0.12 in)	**PVDF** ▪ Only mount with a mounting bracket (included) ▪ MWP 10 bar (150 psi), OPL max. 15 bar (225 psi) ▪ Process temperature range: +10 to +60 °C (+14 to +140 °F)		-	RG
D	ANSI ½" FNPT Hole11.4 mm (0.45 in)	AISI 316L		CRN	RH
		Alloy C276 (2.4819)		CRN	RJ
		Monel (2.4360)		-	RK

1) CSA approval: Product Configurator, order code for "Approval"
2) Product Configurator, order code for "Process connection"

Process connections for PMC71 with internal process isolating diaphragm

Threaded connection JIS

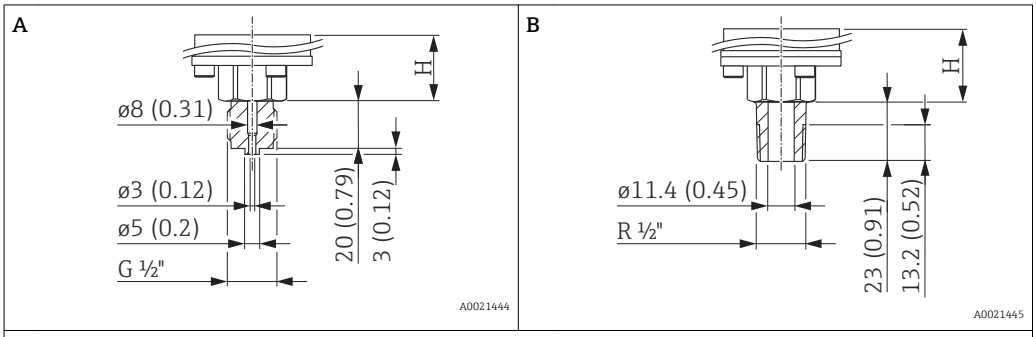

Engineering unit mm (in). Height H → 59

Item	Description	Material	Weight	Option [1]
			kg (lb)	
A	JIS B0202 G ½" (male)	AISI 316L	0.63 (1.39)	GL
B	JIS B0203 R ½" (male)			RL

1) Product Configurator, order code for "Process connection"

Threaded connection DIN 13

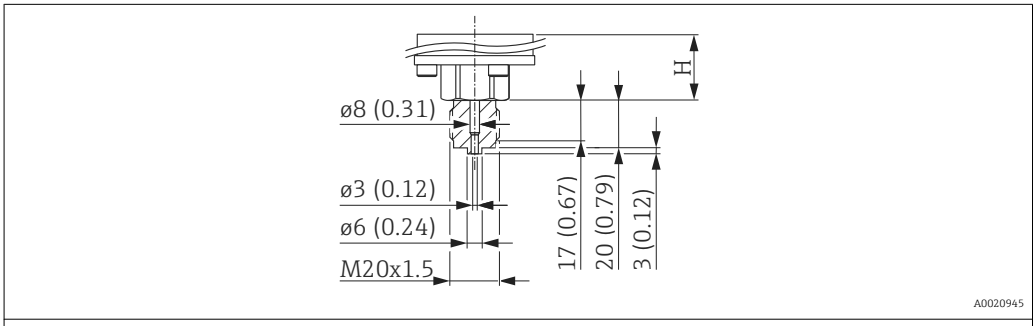

Engineering unit mm (in). Height H → 59

Description	Material	Weight	Option [1]
		kg (lb)	
DIN 13 M20 x 1.5, EN 837 3 mm (0.12 in)	AISI 316L	0.63 (1.39)	GP
	Alloy C276 (2.4819)		GQ

1) Product Configurator, order code for "Process connection"

Process connections for PMC71 with internal process isolating diaphragm - height H

Description	Height H
Standard height	26 mm (1.02 in)
Device with Ex d[ia], CSA XP or FM XP	96 mm (3.78 in)
High-temperature version	106 mm (4.17 in)
High-temperature version with Ex d[ia], CSA XP or FM XP	176 mm (6.93 in)

Process connections for PMC71 with flush-mounted process isolating diaphragm

Threaded connection DIN 13

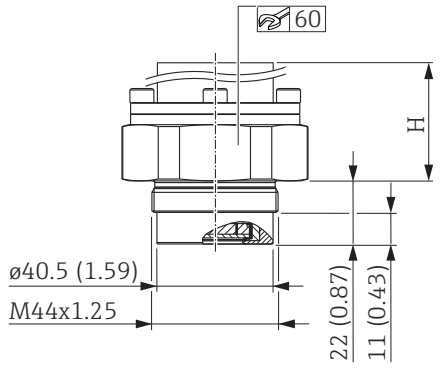

Measurements in mm (in). Height H → 🖹 61

Description	Material	Weight	Option [1]
		kg (lb)	
DIN 13 M44 x 1.25	AISI 316L	0.63 (1.39)	1R
	Alloy C276 (2.4819)		1S

1) Product Configurator, order code for "Process connection"

Threaded connection ISO 228 G

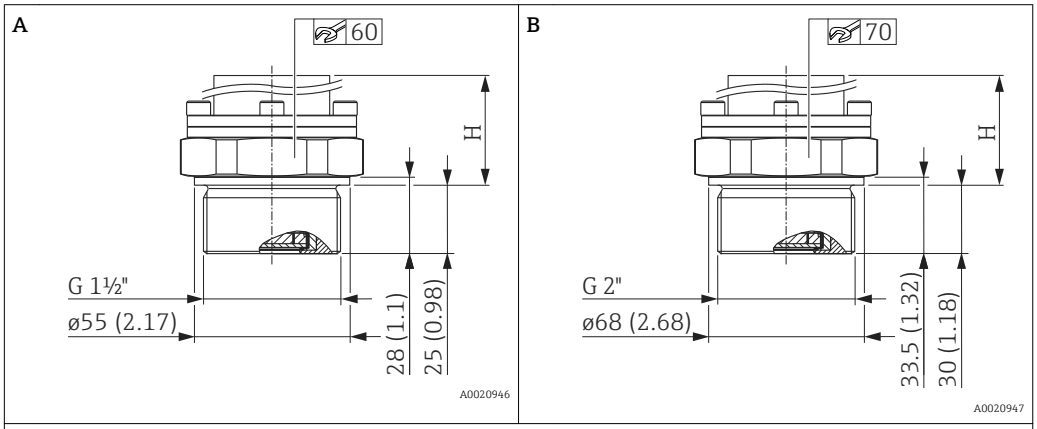

Measurements in mm (in). Height H → 🖹 61

Position	Description	Material	Weight	Option [1]
			kg (lb)	
A	Thread ISO 228 G 1 ½" A	AISI 316L	0.63 (1.39)	1G
		Alloy C276 (2.4819)		1H
		Monel (2.4360)		1J
B	Thread ISO 228 G 2" A	AISI 316L		1K
		Alloy C276 (2.4819)		1L
		Monel (2.4360)		1M

1) Product Configurator, order code for "Process connection"

Process connections for PMC71 with flush-mounted process isolating diaphragm

Threaded connection ANSI

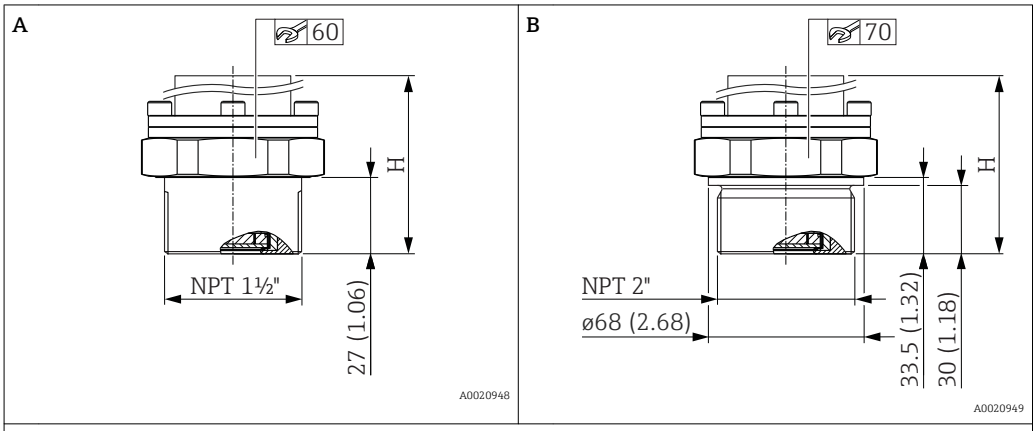

Engineering unit mm (in). Height H → 🖹 61

Position	Designation	Material	Weight	Approval [1]	Option [2]
			kg (lb)		
A	ANSI 1 ½" MNPT	AISI 316L (CRN)	0.63 (1.39)	CRN	2D
		Alloy C276 (2.4819) (CRN)		CRN	2E
		Monel (2.4360)		CRN	2F
B	ANSI 2" MNPT	AISI 316L (CRN)		CRN	2G
		Alloy C276 (2.4819) (CRN)		CRN	2H
		Monel (2.4360)		-	2J

1) CSA approval: Product Configurator, order code for "Approval"
2) Product Configurator, order code for "Process connection"

Process connections for PMC71 with flush-mounted process isolating diaphragm - height H

Description	Height H
High-temperature version and standard version	86 mm (3.39 in)
Version with Ex d[ia], CSA XP or FM XP	151 mm (5.94 in)

Process connections for PMC71 with flush-mounted process isolating diaphragm

EN/DIN flanges, connection dimensions in accordance with EN 1092-1/DIN 2527

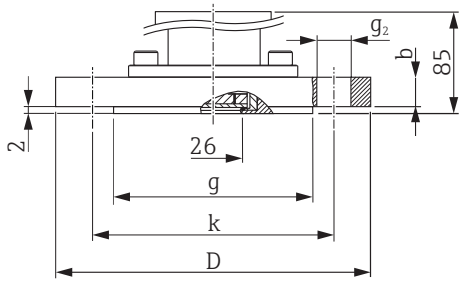

D *Diameter of flange*
b *Thickness*
g *Raised face*
k *Hole circle*
g_2 *Diameter of hole*

Engineering unit mm

Flange							Boltholes			Weight	Option [1]
Material	Nominal diameter	Nominal pressure	Shape [2]	D	b	g	Number	g_2	k		
				mm	mm	mm		mm	mm	kg (lb)	
AISI 316L	DN 25	PN 10-40	B1 (D)	115	18	68	4	14	85	1.4 (3.09)	BA
AISI 316L	DN 32	PN 10-40	B1 (D)	140	18	78	4	18	100	2.0 (4.41)	CP
AISI 316L	DN 40	PN 10-40	B1 (D)	150	18	88	4	18	110	2.4 (5.29)	CQ
AISI 316L	DN 50	PN 10-40	B1 (D)	165	20	102	4	18	125	3.2 (7.06)	B3
PVDF	DN 50	PN 10-16	B1 (D)	165	21.4	102	4	18	125	0.6 (1.32)	BR
AISI 316L	DN 50	PN 63	B2 (E)	180	26	102	4	22	135	4.6 (10.14)	C3
PVDF	DN 80	PN 10-16	B1 (D)	200	21.4	138	8	18	160	1.0 (2.21)	BS
AISI 316L	DN 80	PN 10-40	B1 (D)	200	24	138	8	18	160	5.4 (11.91)	B4

1) Product Configurator, order code for "Process connection"
2) Description as per DIN 2527 provided in brackets

ASME flanges, connection dimensions in accordance with ASME B 16.5, raised face RF

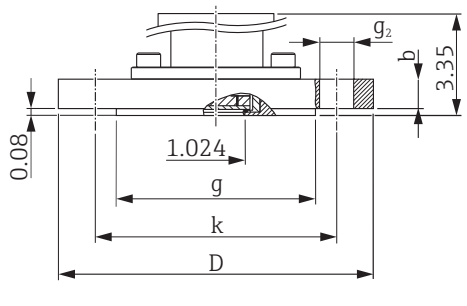

D *Diameter of flange*
b *Thickness*
g *Raised face*
k *Hole circle*
g_2 *Diameter of hole*

Engineering unit in.

Flange						Boltholes			Weight	Approval [1]	Option [2]
Material	Nominal diameter	Class	D	b	g	Number	g_2	k			
	[in]	[lb./sq.in]	[in]	[in]	[in]		[in]	[in]	[kg (lb)]		
AISI 316/316L [3]	1	150	4.25	1.18	2	4	0.62	3.12	0.9 (1.98)	-	AA [4]
AISI 316/316L [3]	1	300	4.88	1.18	2	4	0.75	3.5	1.4 (3.09)	-	AB [4]
AISI 316/316L [3]	1 ½	150	5	0.69	2.88	4	0.62	3.88	1.0 (2.21)	CRN	AE
AISI 316/316L [3]	1 ½	300	6.12	0.81	2.88	4	0.88	4.5	2.6 (5.73)	CRN	AQ
AISI 316/316L [3]	2	150	6	0.75	3.62	4	0.75	4.75	2.4 (5.29)	CRN	AF
ECTFE [5]	2	150	6	0.75	3.62	4	0.75	4.75	2.4 (5.29)	-	JR
PVDF	2	150	6	0.75	3.62	4	0.75	4.75	0.5 (1.1)	-	A3
AISI 316/316L [3]	2	300	6.5	0.88	3.62	8	0.75	5	3.2 (7.06)	CRN	AR
AISI 316/316L [3]	3	150	7.5	0.94	5	4	0.75	6	4.9 (10.8)	CRN	AG
ECTFE [5]	3	150	7.5	0.94	5	4	0.75	6	4.9 (10.8)	-	JS
PVDF	3	150	7.5	0.94	5	4	0.75	6	0.9 (1.98)	-	A4
AISI 316/316L [3]	3	300	8.25	1.12	5	8	0.88	6.62	6.8 (14.99)	CRN	AS
AISI 316/316L [3]	4	150	9	0.94	6.19	8	0.75	7.5	7.1 (15.66)	CRN	AH
ECTFE [5]	4	150	9	0.94	6.19	8	0.75	7.5	7.1 (15.66)	-	JT
AISI 316/316L [3]	4	300	10	1.25	6.19	8	0.88	7.88	11.6 (25.58)	CRN	AT

1) CSA approval: Product Configurator, order code for "Approval"
2) Product Configurator, order code for "Process connection"
3) Combination of AISI 316 for required pressure resistance and AISI 316L for required chemical resistance (dual rated)
4) Screws must be 15 mm (0.59 in) longer than the standard flange screws
5) ECTFE coating on AISI 316/316L. When operating in hazardous areas, avoid electrostatic charge on the plastic surfaces.

JIS flanges, connection dimensions in accordance with JIS B 2220 BL, raised face RF

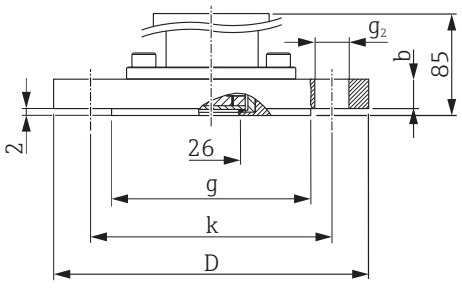

D *Diameter of flange*
b *Thickness*
g *Raised face*
k *Hole circle*
g_2 *Diameter of hole*

Engineering unit mm

Flange						Boltholes			Weight	Option [1]
Material	Nominal diameter	Nominal pressure	D	b	g	Number	g_2	k		
			mm	mm	mm		mm	mm	kg (lb)	
AISI 316L (1.4435)	50 A	10 K	155	16	96	4	19	120	2.0 (4.41)	CF
	80 A	10 K	185	18	127	8	19	150	3.3 (7.28)	KL
	100 A	10 K	210	18	151	8	19	175	4.4 (9.7)	KH

1) Product Configurator, order code for "Process connection"

Hygienic process connections for PMC71 with flush-mounted process isolating diaphragm

Many process connections with an EPDM or HNBR seal are approved for the PMC71 in accordance with the guidelines of the 3A Sanitary Standard. To ensure that the 3A approval is valid for the PMC71 version, a 3A-approved process connection together with an EPDM or HNBR seal must be selected when ordering (Product Configurator, order code for "Seal").

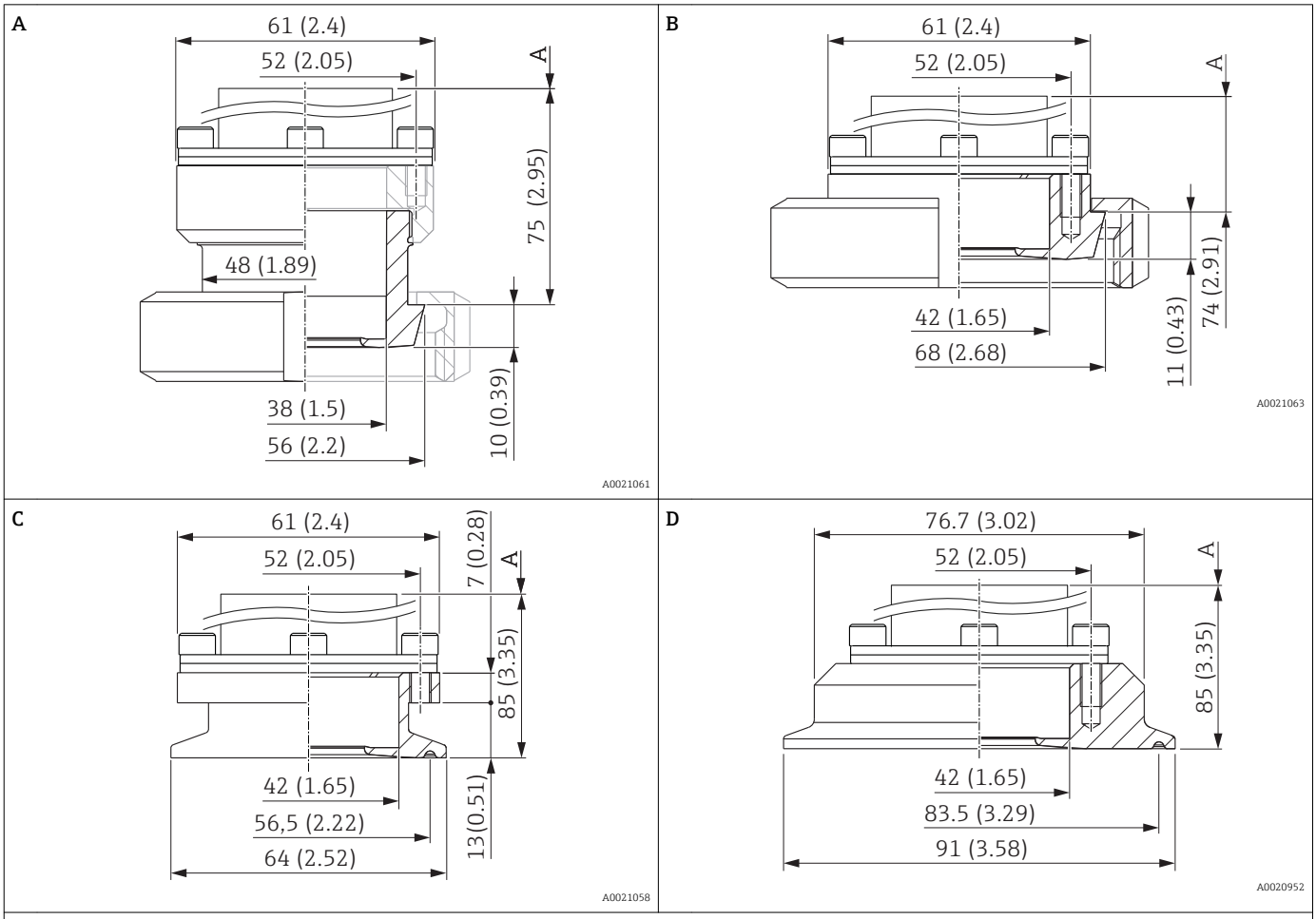

Engineering unit mm (in)

Position	Designation	Nominal pressure	Material [1]	Weight	Approval [2]	Option [3]
				kg (lb)		
A	DIN 11851 DN 40 PN 25, with HNBR or EPDM seal	PN 25	AISI 316L (1.4435)	0.7 (1.54)	EHEDG, 3A, CRN	MP [4]
B	DIN 11851 DN 50 PN 25, with HNBR or EPDM seal	PN 25		0.9 (1.98)	EHEDG, 3A, CRN	MR [4]
C	Tri-Clamp ISO 2852 DN 51 (2"), with HNBR or EPDM seal	PN 40 [5]		0.7 (1.54)	EHEDG, 3A, CRN	TD [4]
D	Tri-Clamp ISO 2852 DN 76.1 (3"), with NBR or EPDM seal	PN 40 [5]		0.9 (1.98)	EHEDG, 3A, CRN	TF [4]

1) Delta-ferrite content < 1 %. Roughness of wetted surfaces R_a < 0.80 µm (31.5 µin) as standard. Lower surface roughness available on request.
2) CSA approval: Product Configurator, order code for "Approval"
3) Product Configurator, order code for "Process connection"
4) Endress+Hauser supplies these slotted nuts in stainless steel AISI 304 (DIN/EN material number 1.4301) or in AISI 304L (DIN/EN material number 1.4307).
5) Restricted nominal pressure (13.8 bar (200 psi)) for the following approvals: Product Configurator, order code for "Approval", option "E", "U" and "V".

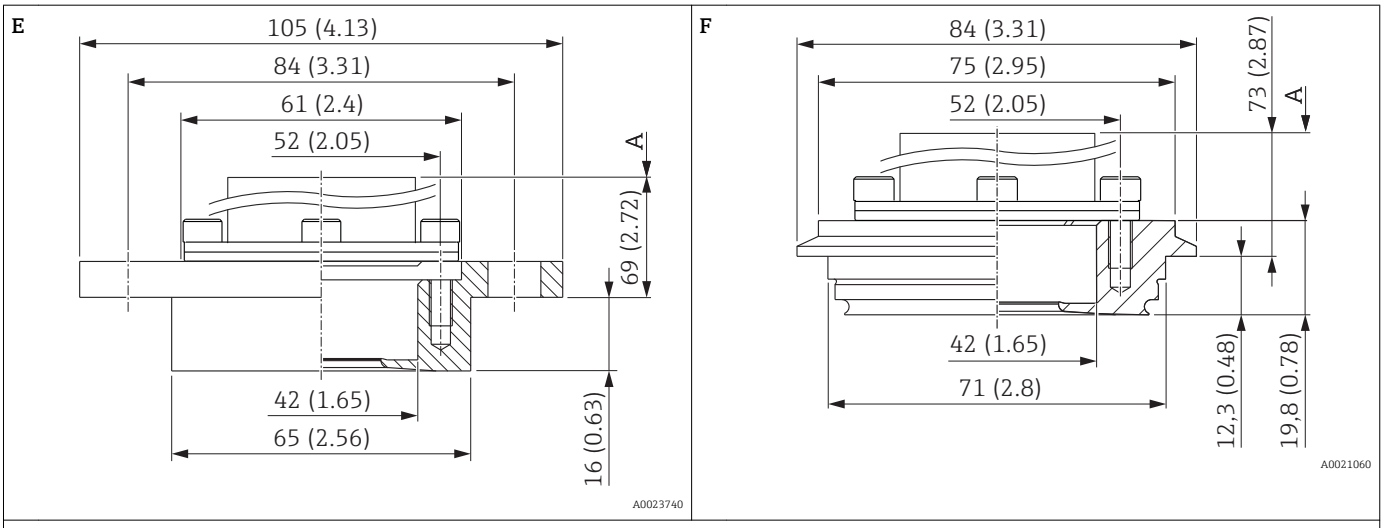

Engineering unit mm (in)

Position	Designation	Nominal pressure	Material [1]	Weight	Approval [2]	Option [3]
				kg (lb)		
E	DRD DN50 (65 mm) with HNBR or EPDM seal	PN 25	AISI 316L (1.4435)	0.9 (1.98)	EHEDG	TK [4]
F	Varivent type N for pipes 40 – 162, with HNBR or EPDM seal	PN 40		1 (2.21)	EHEDG, 3A, CRN	TR

1) Delta-ferrite content < 1 %. Roughness of wetted surfaces R_a < 0.80 µm (31.5 µin) as standard. Lower surface roughness available on request.
2) CSA approval: Product Configurator, order code for "Approval"
3) Product Configurator, order code for "Process connection"
4) Endress+Hauser supplies these slotted nuts in stainless steel AISI 304 (DIN/EN material number 1.4301) or in AISI 304L (DIN/EN material number 1.4307).

Process connections for PMP71 with internal process isolating diaphragm

Threaded connection ISO 228 G

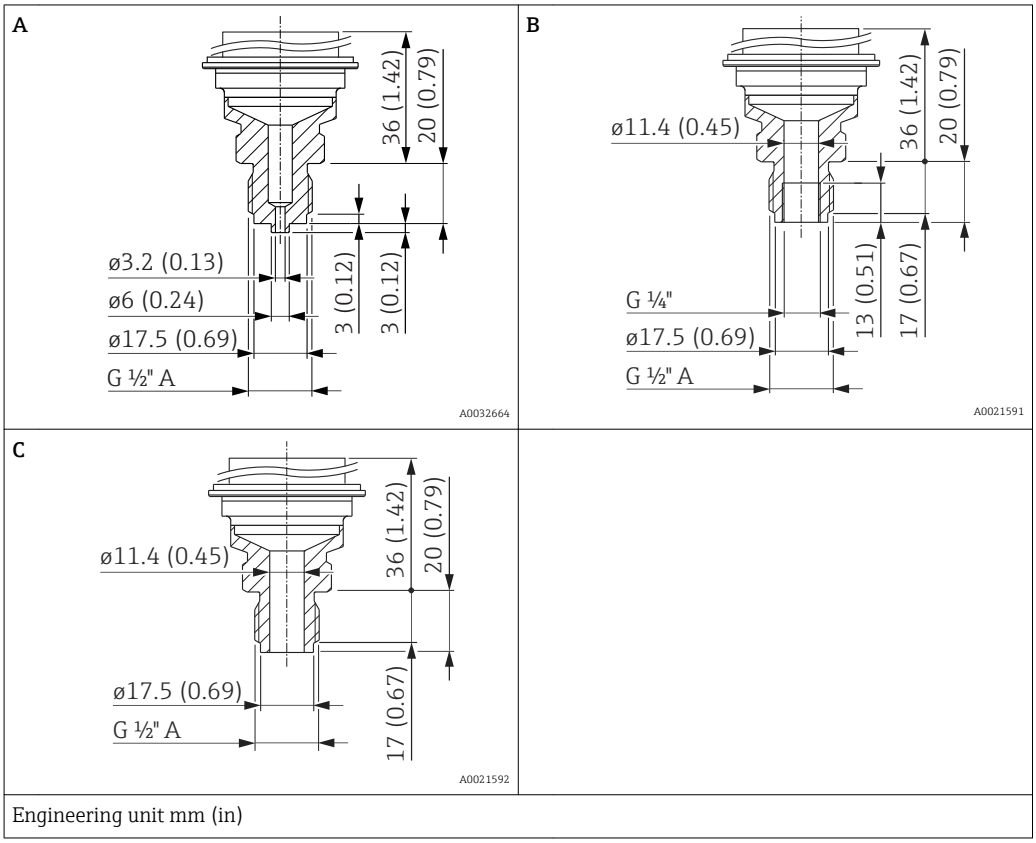

Engineering unit mm (in)

Item	Description	Material	Weight	Option [1]
			kg (lb)	
A	Thread ISO 228 G ½" A EN 837	AISI 316L	0.63 (1.39)	GA
		Alloy C276 (2.4819)		GB
B	Thread ISO 228 G ½" A, G ¼" (internal)	AISI 316L		GE
		Alloy C276 (2.4819)		GF
C	Thread ISO 228 G ½" A, Hole11.4 mm (0.45 in)	AISI 316L		GH
		Alloy C276 (2.4819)		GJ

1) Product Configurator, order code for "Process connection"

Process connections for PMP71 with internal process isolating diaphragm

Threaded connection ANSI

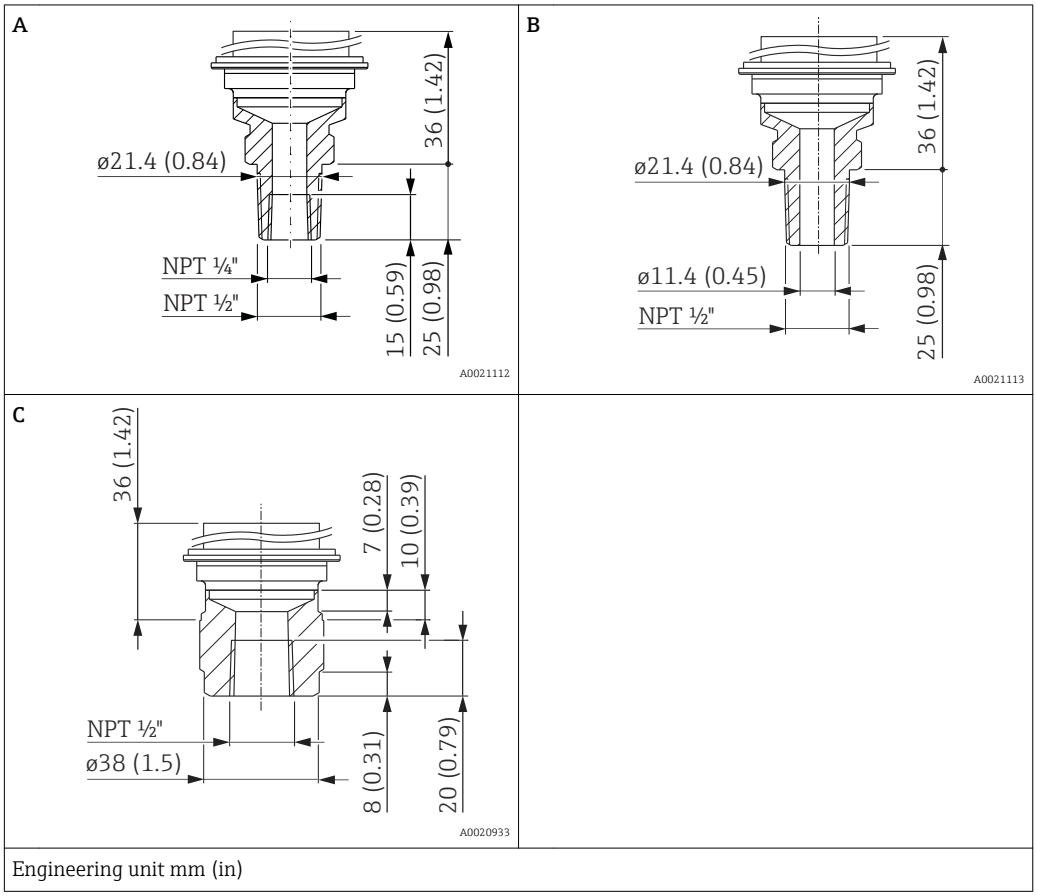

Engineering unit mm (in)

Item	Description	Material	Weight	Approval [1]	Option [2]
			kg (lb)		
A	ANSI ½" MNPT, ¼" FNPT	AISI 316L	0.63 (1.39)	CRN	RA
		Alloy C276 (2.4819)		CRN	RB
B	ANSI ½" MNPT, Hole 11.4 mm (0.45 in) = 400 bar (6 000 psi) Hole 3.2 mm (0.13 in) = 700 bar (10 500 psi)	AISI 316L		CRN	RD
		Alloy C276 (2.4819)		CRN	RE
C	ANSI ½" FNPT	AISI 316L	0.7 (1.54)	CRN	RH
		Alloy C276 (2.4819)		CRN	RJ

1) CSA approval: Product Configurator, order code for "Approval"
2) Product Configurator, order code for "Process connection"

Process connections for PMP71 with internal process isolating diaphragm

Threaded connection JIS

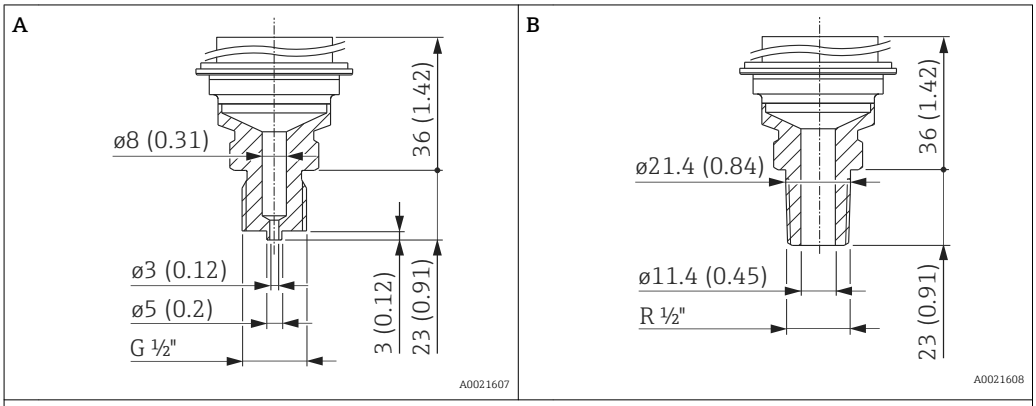

Engineering unit mm (in)

Position	Description	Material	Weight	Option [1]
			kg (lb)	
A	JIS B0202 G ½" (male)	AISI 316L	0.6 (1.32)	GL
B	JIS B0203 R ½" (male)			RL

1) Product Configurator, order code for "Process connection"

Threaded connection DIN 13

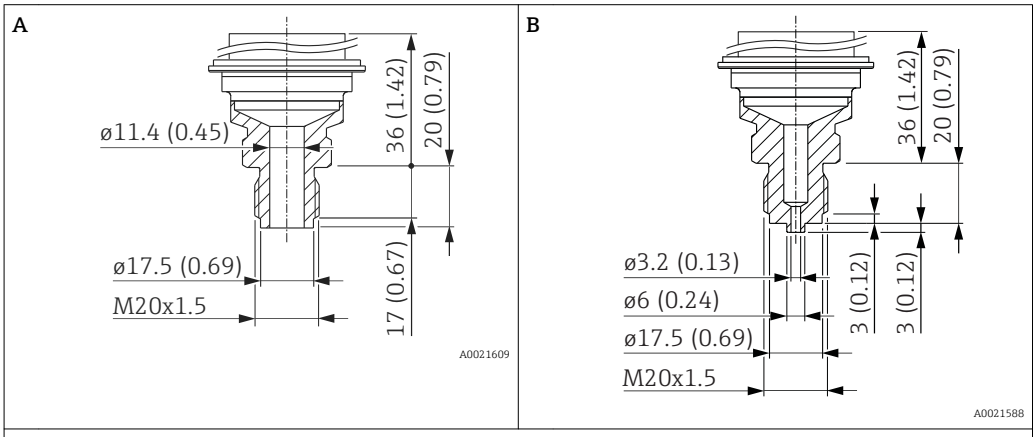

Engineering unit mm (in)

Position	Description	Material	Weight	Option [1]
			kg (lb)	
A	DIN 13 M20 x 1.5 11.4 mm (0.45 in)	AISI 316L	0.6 (1.32)	GP
		Alloy C276 (2.4819)		GQ
B	DIN 13 M20 x 1.5, EN 837 3 mm (0.12 in)	AISI 316L		GR
		Alloy C276 (2.4819)		GS

1) Product Configurator, order code for "Process connection"

Process connections for PMP71 with flush-mounted process isolating diaphragm

Threaded connection ISO 228 G

A

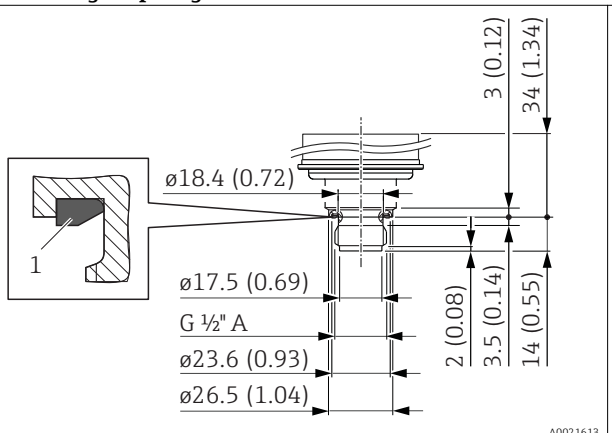

B

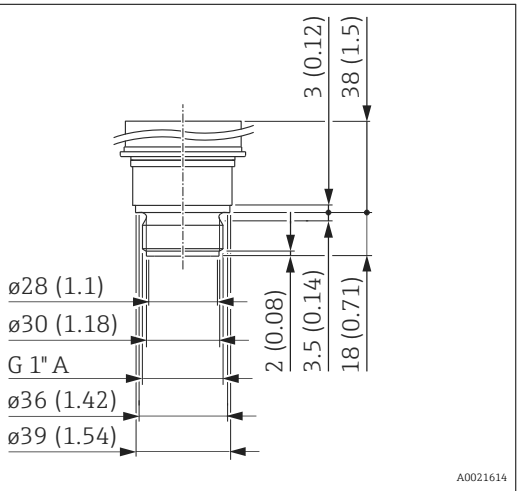

C

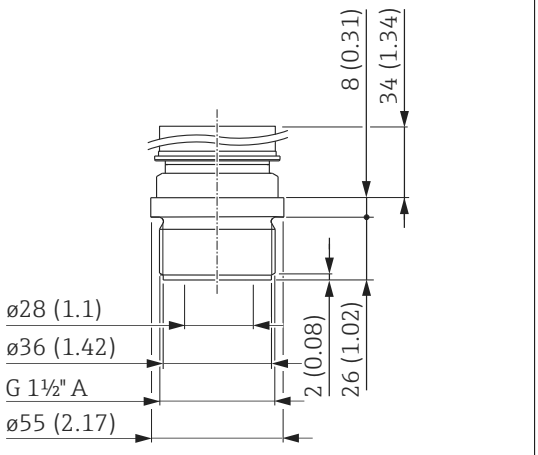

D

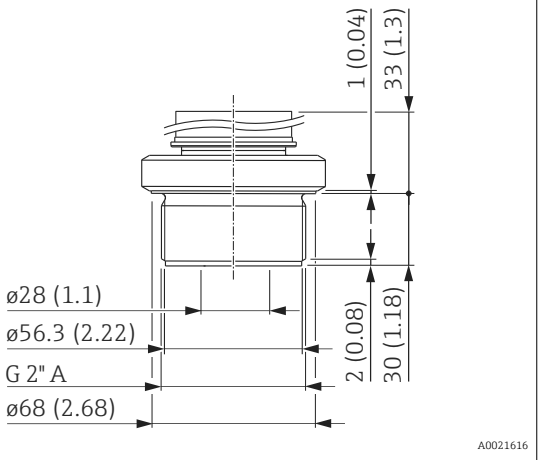

Engineering unit mm (in)

Item	Description	Material	Weight	Option [1]
			kg (lb)	
A	Thread ISO 228 G ½" A, DIN 3852 FKM seal (item 1) pre-installed	AISI 316L	0.4 (0.88)	1A
		Alloy C276 (2.4819)		1B
B	Thread ISO 228 G 1" A	AISI 316L	0.7 (1.54)	1D
		Alloy C276 (2.4819)		1E
C	Thread ISO 228 G 1 ½" A	AISI 316L	1.1 (2.43)	1G
		Alloy C276 (2.4819)		1H
D	Thread ISO 228 G 2" A	AISI 316L	1.5 (3.31)	1K
		Alloy C276 (2.4819)		1L

1) Product Configurator, order code for "Process connection"

Threaded connection DIN

A

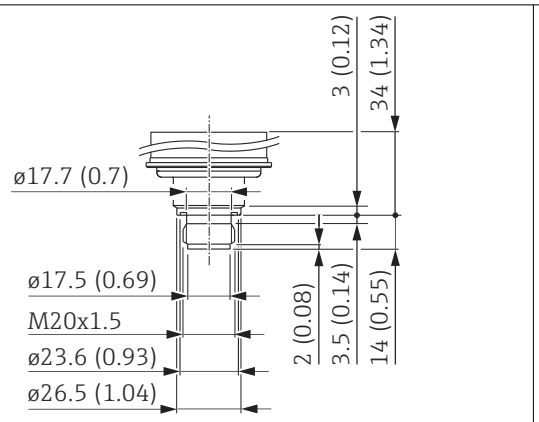

B

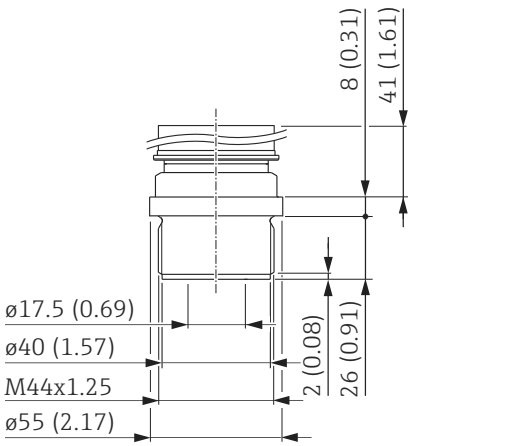

Engineering unit mm (in)

Item	Description	Material	Weight	Option [1]
			kg (lb)	
A	Thread DIN 16288 M20	AISI 316L	0.4 (0.88)	1N
		Alloy C276 (2.4819)		1P
B	Thread DIN 13 M44 x 1.25	AISI 316L	1.1 (2.43)	1R
		Alloy C276 (2.4819)		1S

1) Product Configurator, order code for "Process connection"

Process connections for PMP71 with flush-mounted process isolating diaphragm

Threaded connection ANSI

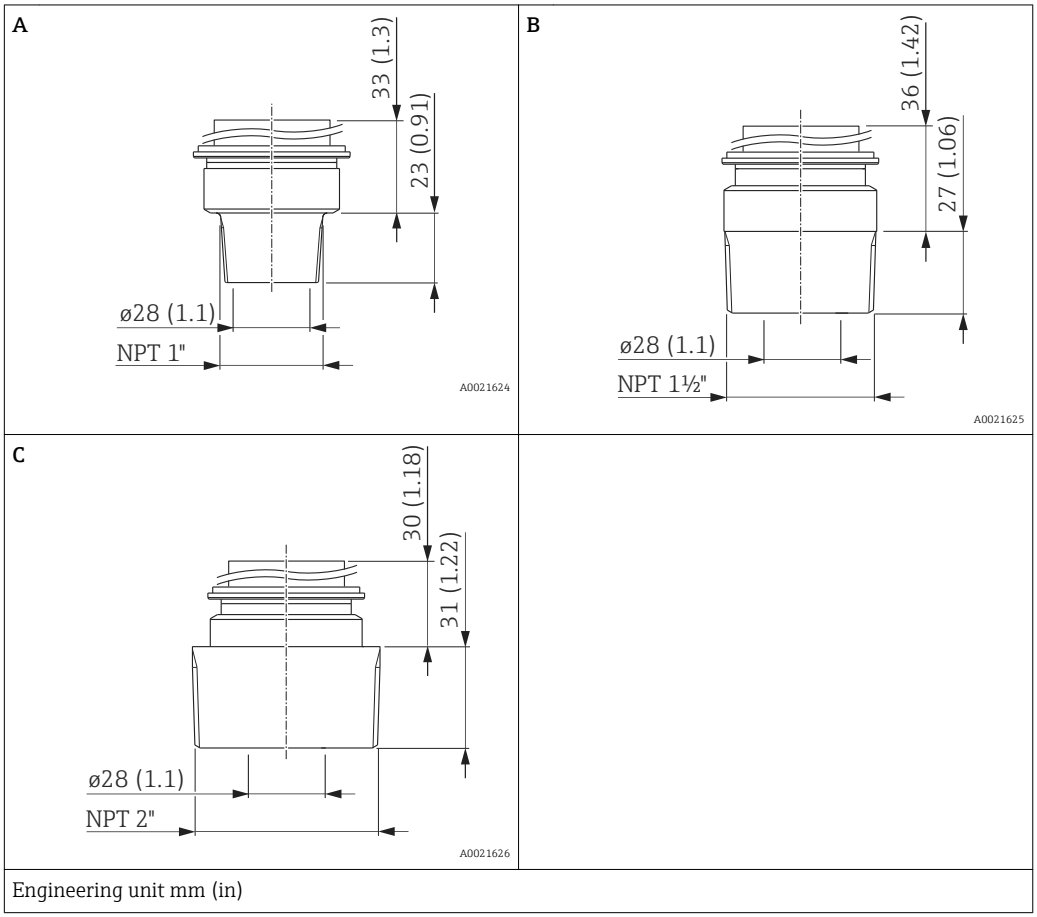

Engineering unit mm (in)

Item	Description	Material	Weight	Approval [1]	Option [2]
			kg (lb)		
A	ANSI 1" MNPT	AISI 316L	0.7 (1.54)	CRN	2A
		Alloy C276 (2.4819)		CRN	2B
B	ANSI 1 ½" MNPT	AISI 316L	1 (2.21)	CRN	2D
		Alloy C276 (2.4819)		CRN	2E
C	ANSI 2" MNPT	AISI 316L	1.3 (2.87)	CRN	2G
		Alloy C276 (2.4819)		CRN	2H

1) CSA approval: Product Configurator, order code for "Approval"
2) Product Configurator, order code for "Process connection"

Process connections for PMP71 with flush-mounted process isolating diaphragm

EN/DIN flanges, connection dimensions in accordance with EN 1092-1/DIN 2527

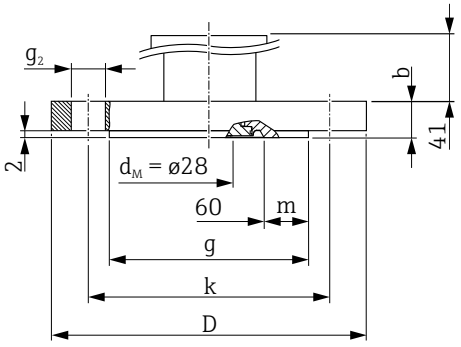

D *Diameter of flange*
b *Thickness*
g *Raised face*
m *Width of raised face*
k *Hole circle*
g_2 *Diameter of hole*
d_M *Max. diameter of the process isolating diaphragm*

Engineering unit mm

Flange [1]							Boltholes			Weight Flange	Option [2]
Nominal diameter	Nominal pressure	Shape [3]	D	b	g	m	Number	g_2	k		
			[mm]	[mm]	[mm]	[mm]		[mm]	[mm]	[kg]	
DN 25	PN 10-40	B1 (D)	115	18	68 [4]	4	4	14	85	1.2 (2.65)	CN
DN 32	PN 10-40	B1 (D)	140	18	78 [4]	9	4	18	100	1.9 (4.19)	CP
DN 40	PN 10-40	B1 (D)	150	18	88 [4]	14	4	18	110	2.2 (4.85)	CQ
DN 50	PN 10-40	B1 (D)	165	20	102	-	4	18	125	3.0 (6.62)	B3
DN 80	PN 10-40	B1 (D)	200	24	138	-	8	18	160	5.3 (11.69)	B4

1) Material: AISI 316L
2) Product Configurator, order code for "Process connection"
3) Description as per DIN 2527 provided in brackets
4) With these process connections the raised face is smaller than described in the standard. Due to the smaller raised face, a special seal must be used.

Process connections for PMP71 with flush-mounted process isolating diaphragm

ASME flanges, connection dimensions in accordance with ASME B 16.5, raised face RF*

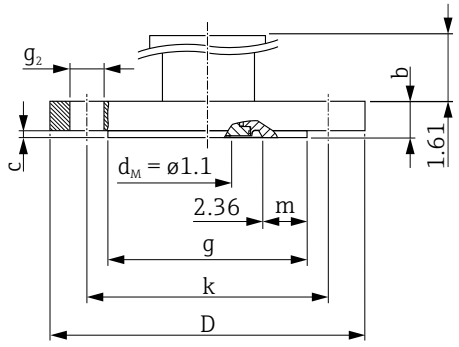

D *Diameter of flange*
b *Thickness*
g *Raised face*
c *Thickness of raised face*
m *Width of raised face*
k *Hole circle*
g_2 *Diameter of hole*
d_M *Max. diameter of the process isolating diaphragm*

Engineering unit in.
(*all apart from AN, see table below)

Flange [1]							Boltholes			Weight	Approval [2]	Option [3]
Nominal diameter	Class/nominal pressure	D	b	g	c	m	Number	g_2	k			
[in]	lb./sq.in	[in]	[in]	[in]	[in]	[in]		[in]	[in]	[kg]		
1	300	4.88	0.69	2 [4]	0.06	0.2	4	0.75	3.5	1.3 (2.87)	CRN	AN
1 ½	150	5	0.69	2.88 [4]	0.08	0.52	4	0.62	3.88	1.5 (3.31)	CRN	AE
1 ½	300	6.12	0.81	2.88 [4]	0.08	0.52	4	0.88	4.5	2.6 (5.73)	CRN	AQ
2	150	6	0.75	3.62	0.08	-	4	0.75	4.75	2.4 (5.29)	CRN	AF
2	300	6.5	0.88	3.62	0.08	-	8	0.75	5	3.2 (7.06)	CRN	AR
3	150	7.5	0.94	5	0.08	-	4	0.75	6	4.9 (10.8)	CRN	AG
3	300	8.25	1.12	5	0.08	-	8	0.88	6.62	6.7 (14.77)	CRN	AS
4	150	9	0.94	6.19	0.08	-	8	0.75	7.5	7.1 (15.66)	CRN	AH
4	300	10	1.25	6.19	0.08	-	8	0.88	7.88	11.6 (25.88)	CRN	AT

1) Material: AISI 316/316L; Combination of AISI 316 for required pressure resistance and AISI 316L for required chemical resistance (dual rated)
2) CSA approval: Product Configurator, order code for "Approval"
3) Product Configurator, order code for "Process connection"
4) With these process connections the raised face is smaller than described in the standard. Due to the smaller raised face, a special seal must be used.

Process connections for PMP71 with flush-mounted process isolating diaphragm

JIS flanges, connection dimensions in accordance with JIS B 2220 BL, raised face RF

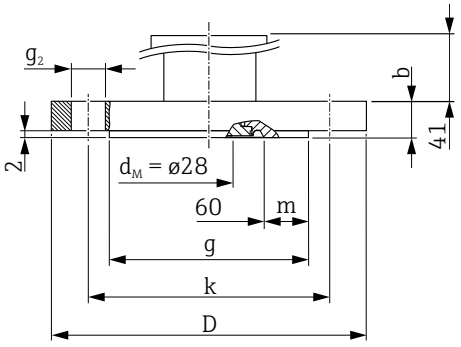

D *Diameter of flange*
b *Thickness*
g *Raised face*
m *Width of raised face*
k *Hole circle*
g_2 *Diameter of hole*

Engineering unit mm

Flange							Boltholes			Weight Flange	Option [1]
Material	Nominal diameter	Class/ Nominal pressure	D	b	g	m	Number	g_2	k		
			[mm]	[mm]	[mm]	[mm]		[mm]	[mm]	[kg]	
AISI 316L	25 A	20 K	125	16	67 [2]	3.5	4	19	90	1.5 (3.31)	KA
AISI 316L	50 A	10 K	155	16	96	-	4	19	120	2.0 (4.41)	CF
AISI 316L	80 A	10 K	185	18	127	-	8	19	150	3.3 (7.28)	KL
AISI 316L	100 A	10 K	210	18	151	-	8	19	175	4.4 (9.7)	KH

1) Product Configurator, order code for "Process connection"
2) With these process connections the raised face is smaller than described in the standard. Due to the smaller raised face, a special seal must be used.

Process connections for PMP71

Oval flange

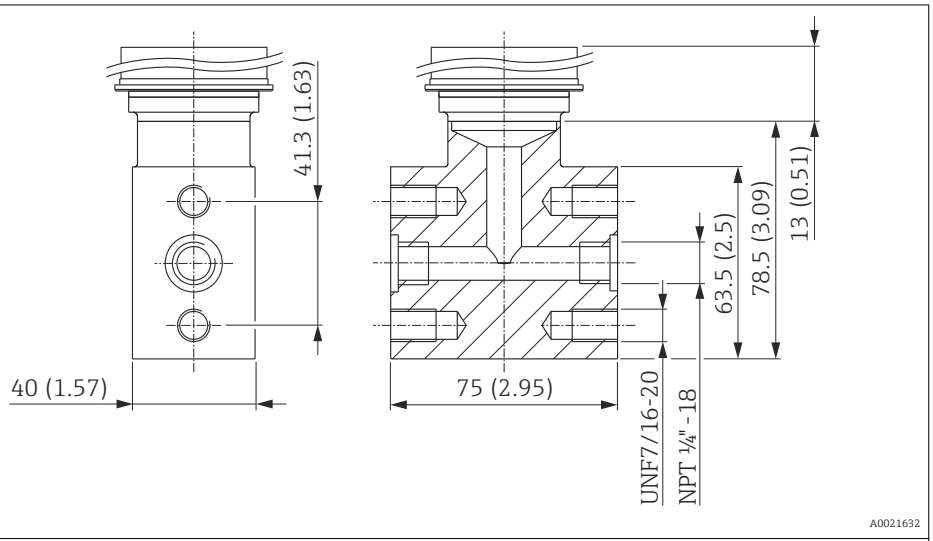

Engineering unit mm (in)

Material	Description	Weight	Approval [1]	Option [2]
		kg (lb)		
AISI 316L (1.4404)	Oval flange adapter 1/4-18 NPT as per IEC 61518 Mounting: 7/16-20 UNF	1.9 (4.19)	CRN	UR

1) CSA approval: Product Configurator, order code for "Approval"
2) Product Configurator, order code for "Process connection"

Process connections for PMP71

Prepared for diaphragm seal mount

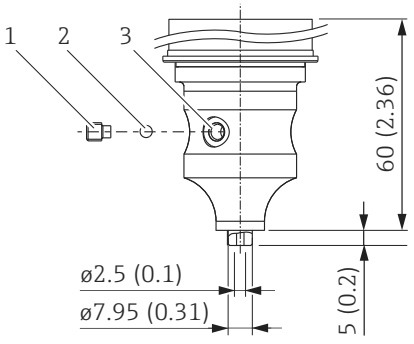

1 Setscrew with hexagonal recess4 mm (0.16 in), material A2-70
2 Bearing DIN 5401 (1.3505)
3 Hole for filling fluid

Engineering unit mm (in)

Material	Description	Weight in kg (lb)	Approval [1]	Option [2]
AISI 316L (1.4404)	Prepared for diaphragm seal mount	1.9 (4.19)	CRN	U1

1) CSA approval: Product Configurator, order code for "Approval"
2) Product Configurator, order code for "Process connection"

Valve manifold DA63M- (optional)

Endress+Hauser supplies milled valve manifolds via the transmitter's product structure in the following versions:

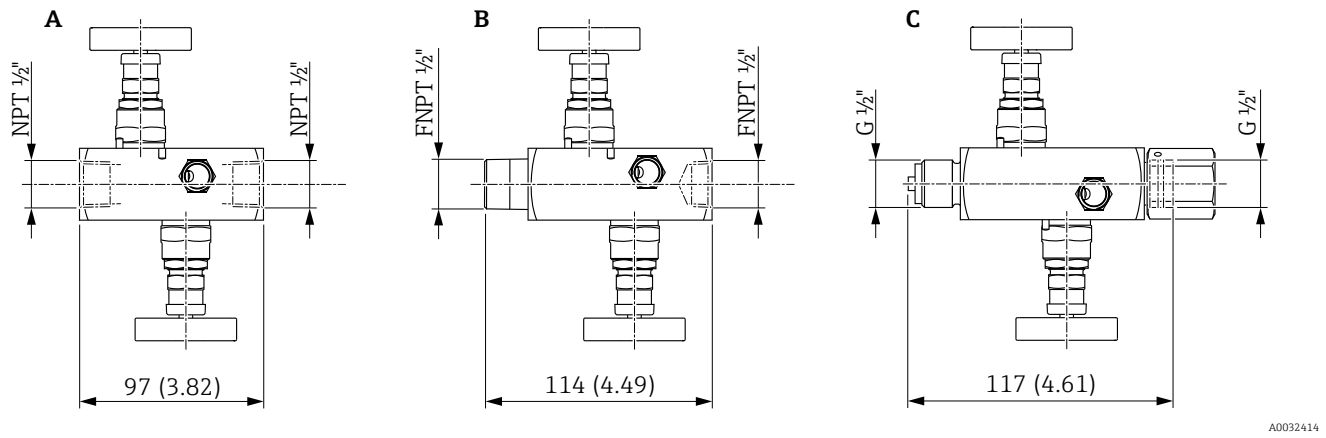

A 2-way valve manifold FNPT x FNPT
B 2-way valve manifold MNPT x FNPT
C 2-way valve manifold G ½" + adjusting nut

Engineering unit mm (in)

2-way valve manifolds in 316L or AlloyC can be
- as an **enclosed** accessory (seal for mounting enclosed)
- ordered as a **mounted** accessory (mounted valve manifolds are supplied with a documented leakage test).

Certificates ordered with the equipment (e.g. 3.1 material certificate and NACE) and tests (e.g. PMI and pressure test) apply to the transmitter and the valve manifold.

For other details (order option, dimension, weight, materials), see SD01553P/00/EN "Mechanical accessories for pressure measuring devices".

During the operating life of the valves, it may be necessary to re-tighten the packing.

Mounting on valve manifold

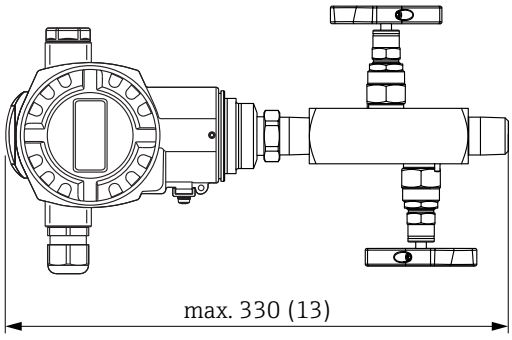

Engineering unit mm (in)

Ordering information:

Product Configurator, order code for "Accessories mounted"

PMP75 basic device

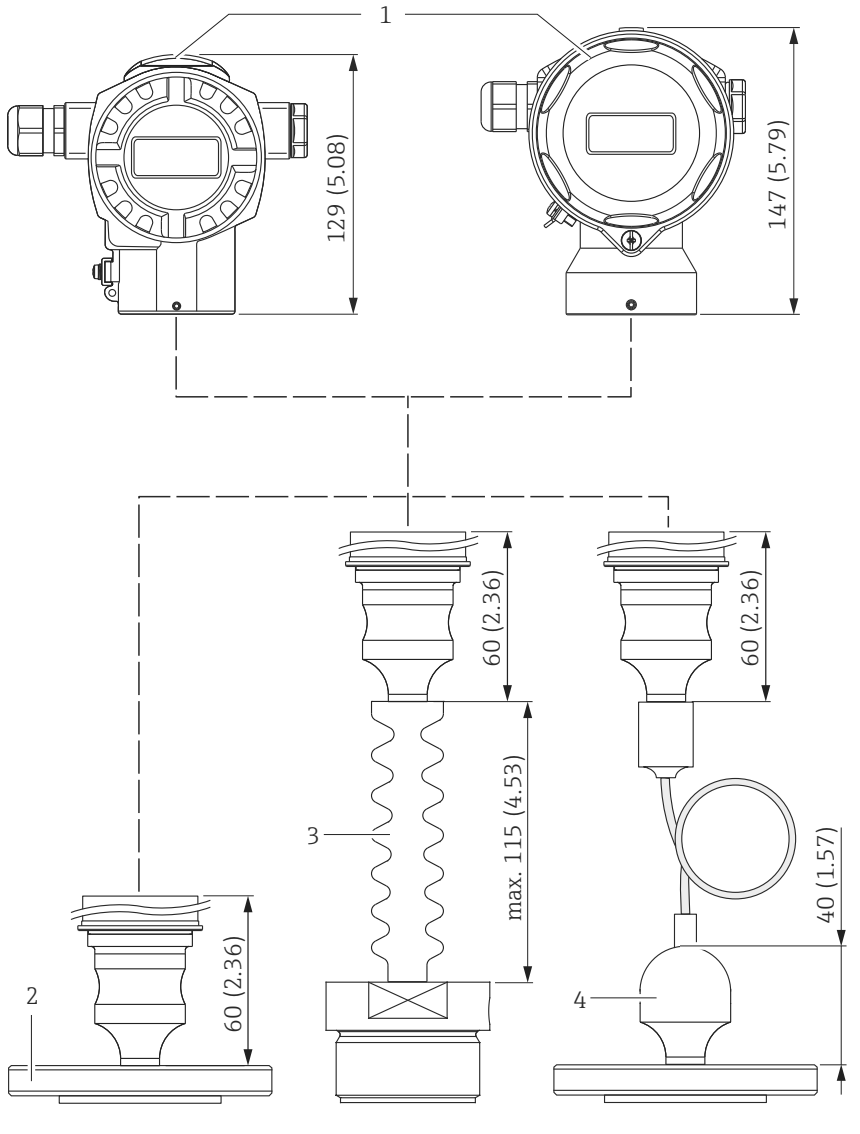

1 PMP75 basic device
2 Diaphragm seal, here, e.g. flange diaphragm seal
3 Diaphragm seal with temperature isolator
4 Process connections with capillary lines are 40 mm (1.57 in) higher than process connections without capillary lines

Engineering unit mm (in). PMP75 basic device with diaphragm seal.

Process connections for PMP75 with flush-mounted process isolating diaphragm

- The weights of the diaphragm seals are given in the tables. For weight of housing, see → 🖹 55
- The following drawings are drawings that illustrate how the system works in principle. In other words, the dimensions of a diaphragm seal supplied can deviate from the dimensions given in this document.
- Note "Planning instructions, diaphragm seal systems" section→ 🖹 110
- For further information please contact your local Endress+Hauser Sales Center.

Diaphragm seal cell structure

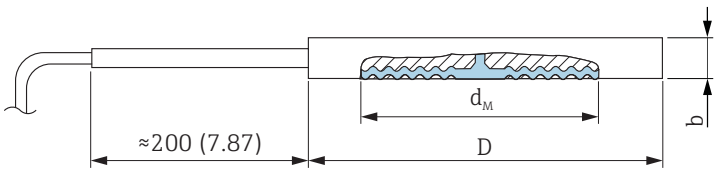

D *Diameter*
d_M *Max. diameter of the process isolating diaphragm*
b *Thickness*

Engineering unit mm (in)

Flange					Diaphragm seal		Approval [1]	Option [2]
Material	Nominal diameter	Nominal pressure [3]	D	b	d_M	Weight		
			[mm]	[mm]	[mm]	[kg (lb)]		
AISI 316L	DN 50	PN 16-400	102	20	59	1.3 (2.87)	-	UI
	DN 80	PN 16-400	138	20	89	2.3 (5.07)	-	UJ
	DN 100	PN 16-400	162	20	89	3.1 (6.84)	-	UK
	[in]	[lb/sq.in]	[in (mm)]	[in (mm)]	[in (mm)]			
	2	150-2500	3.89 (99)	0.79 (20)	2.32 (59)	1.3 (2.87)	CRN	UL
	3	150-2500	5.00 (127)	0.79 (20)	3.50 (89)	2.3 (5.07)	CRN	UM
	4	150-2500	6.22 (158)	0.79 (20)	3.50 (89)	3.1 (6.84)	CRN	UR

1) CSA approval: Product Configurator, order code for "Approval"
2) Product Configurator, order code for "Process connection"
3) The specified nominal pressure applies to the diaphragm seal. The maximum pressure for the measuring device is dependent on the lowest-rated element, with regard to pressure, of the selected components → 🖹 53.

Process connections for PMP75 with flush-mounted process isolating diaphragm

Thread ISO 228 and ANSI

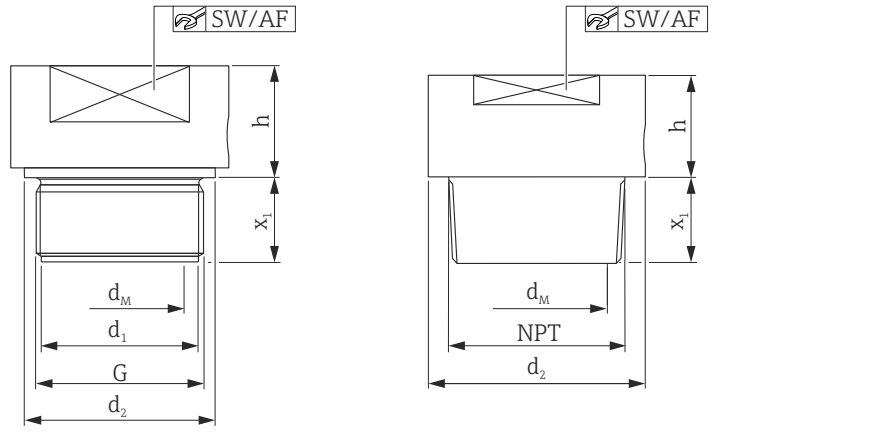

d_1 Diameter
d_2 Diameter
G Thread
x_1 Screw-in length
AF across flats
d_M Max. diameter of the process isolating diaphragm
h Height

Engineering unit mm (in). Left: thread ISO 228, right: thread ANSI

Threaded connection							Diaphragm seal			Approval [1]	Option [2]
Material	G	Nominal pressure	d_1	d_2	x_1	SW/AF	d_M	h	Weight		
		PN	[mm]	[mm]	[mm]		[mm]	[mm]	[kg (lb)]		
AISI 316L	G 1" A	400	30	39	21 [3]	32	30	19	0.4 (0.88)	-	1D
Alloy C276									0.5 (1.1)	-	1E
AISI 316L	G 1 ½" A	400	44	55	30	50	42	20	0.9 (1.98)	-	1G
Alloy C276									1.0 (2.21)	-	1H
AISI 316L	G 2"	400	56	68	30	65	50	20	1.9 (4.19)	-	1K
Alloy C276									2.1 (4.63)	-	1L
AISI 316L	1" MNPT	400	–	45	28	41	24	17	0.6 (1.32)	CRN	2A
Alloy C276									0.7 (1.54)	CRN	2B
AISI 316L	1 ½" MNPT	400	–	60	30	41	36	20	0.9 (1.98)	CRN	2D
Alloy C276				52	30	46	32	20	1.0 (2.21)	CRN	2E
AISI 316L	2" MNPT	400	–	78	30	65	38	25	1.8 (3.97)	CRN	2G
Alloy C276									2.0 (4.41)	CRN	2H

1) CSA approval: Product Configurator, order code for "Approval"
2) Product Configurator, order code for "Process connection"
3) 28 mm (1.1 in) in conjunction with high-temperature oil

Process connections for PMP75 with flush-mounted process isolating diaphragm

Tri-Clamp ISO 2852

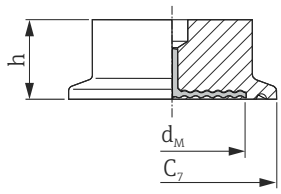

A0021644

C7 *Diameter of flange*
h *Height*
d_M *Max. diameter of the process isolating diaphragm*

Engineering unit mm (in)

Material [1]	Nominal diameter ISO 2852	Nominal diameter DIN 32676	Nominal diameter	C_7	d_M		h	Weight	Approval [2]	Option [3]
					Standard	with TempC membrane				
			[in]	[mm]	[mm]	[mm]	[mm]	[kg (lb)]		
AISI 316L	ND 25 / 33.7	DN 25	1	50.5	24	-	37	0.32 (0.71)	EHEDG, 3A, CRN	TB
	ND 38	DN 40	1 ½	50.5	36	36	30	1 (2.21)	EHEDG, 3A, CRN	TC [4] [5]
	ND 51 / 40	DN 50	2	64	48	41	30	1.1 (2.43)	EHEDG, 3A, CRN	TD [4] [5]
	ND 63.5	DN 50	2 ½	77.5	61	61	30	0.7 (1.54)	EHEDG, 3A	TE [6]
	ND 76.1	–	3	91	73	61	30	1.2 (2.65)	EHEDG, 3A, CRN	TF [5]

1) Surface roughness of the wetted surfaces R_a < 0.76 µm (29.9 µin) as standard. Lower surface roughness available on request.
2) CSA approval: Product Configurator, order code for "Approval"
3) Product Configurator, order code for "Process connection"
4) Optionally available as an ASME-BPE-compliant diaphragm seal version for use in biochemical processes, surfaces in contact with medium R_a < 0.38 µm (15 µin)) , electropolished; order using order code for "Additional options", option "P".
5) Alternatively available with TempC membrane.
6) With TempC membrane

PN max. = 40 bar (580 psi). The maximum PN depends on the clamp used.

Process connections for PMP75 with flush-mounted process isolating diaphragm

Tri-Clamp pipe diaphragm seal ISO 2852

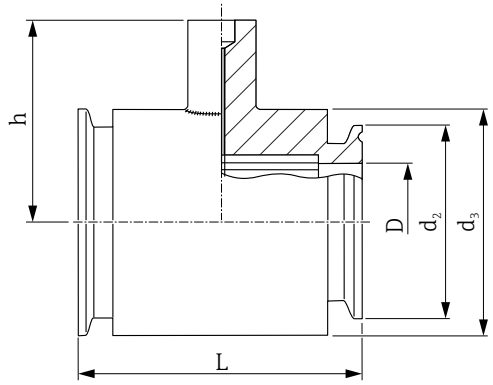

h *Height*
D *Diameter*
d_2 *Diameter*
d_3 *Diameter*
L *Installation length*

Engineering unit mm (in)

Material [1]	Nominal diameter ISO 2852	Nominal diameter	Nominal pressure	D	d_2	d_3	h	L	Weight	Approval [2]	Option [3]
		[in]		[mm]	[mm]	[mm]	[mm]	[mm]	[kg (lb)]		
AISI 316L	DN 25	1	PN 40	22.5	50.5	54	67	126	1.7 (3.75)	3A, CRN	SB
	DN 38	1 ½	PN 40	35.5	50.5	69	67	126	1.0 (2.21)	3A, CRN	SC [4]
	DN 51	2	PN 40	48.6	64	78	79	100	1.7 (3.75)	3A, CRN	SD [4]

1) Surface roughness of the wetted surfaces R_a < 0.8 µm (31.5 µin) as standard.
2) CSA approval: Product Configurator, order code for "Approval"
3) Product Configurator, order code for "Process connection"
4) incl. 3.1 and pressure test according to Pressure Equipment Directive, Category II

Hygienic process connections for PMP75 with flush-mounted process isolating diaphragm

Varivent for pipes

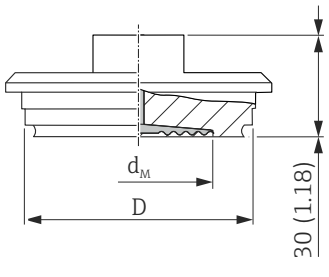

A0021672

D Diameter
d_M Max. diameter of the process isolating diaphragm

Engineering unit mm (in)

Material [1]	Designation	Nominal pressure	D	d_M		Weight	Approval	Option [2]
				Standard	with TempC membrane			
			[mm]	[mm]	[mm]	[kg (lb)]		
AISI 316L	Type F for pipes DN 25 - DN 32	PN 40	50	34	36	0.4 (0.88)	EHEDG, 3A	TU [3]
AISI 316L	Type N for pipes DN 40 - DN 162	PN 40	68	58	61	0.8 (1.76)	EHEDG, 3A	TR [4] [5]

1) Surface roughness of the wetted surfaces R_a < 0.76 µm (29.9 µin) as standard.
2) Product Configurator, order code for "Process connection"
3) With TempC membrane
4) Optionally available as an ASME-BPE-compliant diaphragm seal version for use in biochemical processes, surfaces in contact with medium R_a < 0.38 µm (15 µin)) , electropolished; order using order code for "Additional options", option "P". Reduced surface roughness on request.
5) Alternatively available with TempC membrane.

DRD DN50 (65 mm)

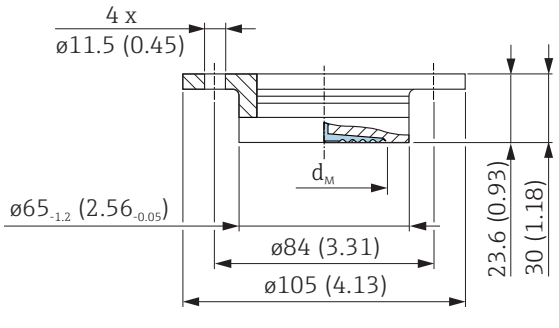

A0021673

d_M Max. diameter of the process isolating diaphragm

Engineering unit mm (in)

Material [1]	Nominal pressure	d_M		Weight	Option [2]
		Standard	with TempC membrane		
		[mm]	[mm]	[kg (lb)]	
AISI 316L	PN 25	50	48	0.75 (1.65)	TK [3]

1) Surface roughness of the wetted surfaces R_a < 0.76 µm (29.9 µin) as standard.
2) Product Configurator, order code for "Process connection"
3) Alternatively available with TempC membrane.

Hygienic process connections for PMP75 with flush-mounted process isolating diaphragm

SMS nozzles with coupling nut

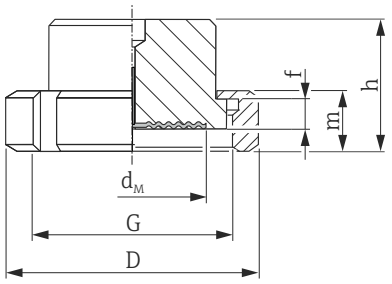

A0021674

D *Diameter*
f *Nozzle height*
G *Thread*
h *Height*
m *Height*
d_M *Max. diameter of the process isolating diaphragm*

Engineering unit mm (in)

Material [1]	Nominal diameter	Nominal pressure	D	f	G	m	h	d_M	Weight	Approval	Option [2]
			[mm]	[mm]		[mm]	[mm]	[mm]	[kg (lb)]		
AISI 316L	1	PN 25	54	3.5	Rd 40 – 1/6	20	42.5	24	0.25 (0.55)	3A, EHEDG	TG
	1 ½	PN 25	74	4	Rd 60 – 1/6	25	57	36	0.65 (1.43)	3A, EHEDG	TH [3]
	2	PN 25	84	4	Rd 70 – 1/6	26	62	48	1.05 (2.32)	3A, EHEDG	TI [3]

1) Surface roughness of the wetted surfaces R_a < 0.76 µm (29.9 µin) as standard.
2) Product Configurator, order code for "Process connection"
3) Alternatively available with TempC diaphragm.

APV-RJT nozzles with coupling nut

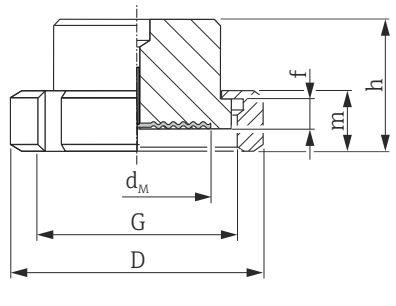

D Diameter
f Nozzle height
G Thread
h/m Height
d_M Max. diameter of the process isolating diaphragm

Engineering unit mm (in)

Material [1]	Nominal diameter	Nominal pressure	D	f	G	m	h	d_M	Weight	Option [2]
	[in]	[bar]	[mm]	[mm]		[mm]	[mm]	[mm]	[kg (lb)]	
AISI 316L	1	PN 40	77	6.5	1 13/16 – 1/8"	22	42.6	21	0.45 (0.99)	TL
	1 ½	PN 40	72	6.4	2 5/16 – 1/8"	22	42.6	28	0.75 (1.65)	TM
	2	PN 40	86	6.4	2 7/8 – 1/8"	22	42.6	38	1.2 (2.65)	TN

1) Surface roughness of the wetted surfaces R_a < 0.8 µm (31.5 µin) as standard.
2) Product Configurator, order code for "Process connection"

APV-ISS nozzles with coupling nut

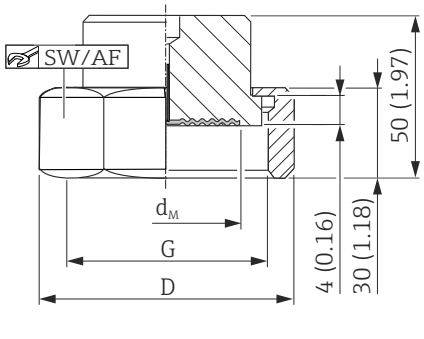

D Diameter
G Thread
AF across flats
d_M Max. diameter of the process isolating diaphragm

Engineering unit mm (in)

Material [1]	Nominal diameter	Nominal pressure	D	G	SW/AF	d_M	Weight	Option [2]
	[in]	[bar]	[mm]			[mm]	[kg (lb)]	
AISI 316L	1	PN 40	54.1	1 ½" – 1/8"	46.8	24	0.4 (0.88)	TP
	1 ½	PN 40	72	2" – 1/8"	62	34	0.6 (1.32)	TQ
	2	PN 40	89	2 ½" – 1/8"	77	45	1.1 (2.43)	TS

1) Surface roughness of the wetted surfaces R_a < 0.8 µm (31.5 µin) as standard.
2) Product Configurator, order code for "Process connection"

Hygienic process connections for PMP75 with flush-mounted process isolating diaphragm

Taper adapter with coupling nut, DIN 11851

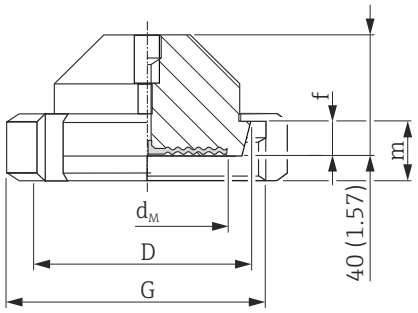

A0021678

D Diameter
f Nozzle height
G Thread
m Height
d_M Max. diameter of the process isolating diaphragm

Engineering unit mm (in)

Material [1]	Taper adapter				Slotted nut		Diaphragm seal			Approval	Option [2]
							d_M		Weight		
	Designation	Nominal pressure	D	f	G	m	Standard	with TempC membrane			
		[bar]	[mm]	[mm]		[mm]	[mm]	[mm]	[kg (lb)]		
AISI 316L	DN 32	PN 40	50	10	Rd 58 x 1/6"	21	32	28	0.45 (0.99)	3A, EHEDG	MI [3]
	DN 40	PN 40	56	10	Rd 65 x 1/6"	21	38	36	0.45 (0.99)	3A, EHEDG	MZ [3]
	DN 50	PN 25	68.5	11	Rd 78 x 1/6"	19	52	48	1.1 (2.43)	3A, EHEDG	MR [4]
	DN 65	PN 25	86	12	Rd 95 x 1/6"	21	66	61	2.0 (4.41)	3A, EHEDG	MS [4]
	DN 80	PN 25	100	12	Rd 110 x 1/4"	26	81	61	2.55 (5.62)	3A, EHEDG	MT [4]

1) Surface roughness of the wetted surfaces R_a < 0.76 µm (29.9 µin) as standard.
2) Product Configurator, order code for "Process connection"
3) With TempC membrane
4) Alternatively available with TempC membrane.

NEUMO BioControl

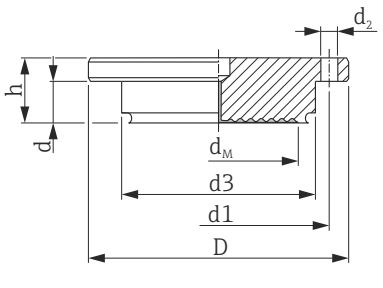

D Diameter
h/d Height
d1/ d3 diameter
d_2 Diameter of hole
d_M Max. diameter of the process isolating diaphragm

Engineering unit mm (in)

Material [1]	NEUMO BioControl (Process temperature range: −10 to +200 °C (+14 to +392 °F))								Diaphragm seal			Approval	Option [2]
									d_M		Weight		
	Nominal diameter	Nominal pressure	D	d	d_2	d_3	d_1	m	Standard	with TempC membrane			
		[bar]	[mm]	[mm]	[mm]	[mm]	[mm]	[mm]	[mm]	[mm]	[kg (lb)]		
AISI 316L	DN 50	PN 16	90	17	4 x Ø 9	50	70	27	40	36	1.1 (2.43)	3A	S4 [3]
	DN 80	PN 16	140	25	4 x Ø 11	87.4	115	37	61	61	2.6 (5.73)	3A	S6 [3]

1) Surface roughness of the wetted surfaces R_a < 0.76 µm (29.9 µin) as standard.
2) Product Configurator, order code for "Process connection"
3) With TempC membrane

Universal process adapter

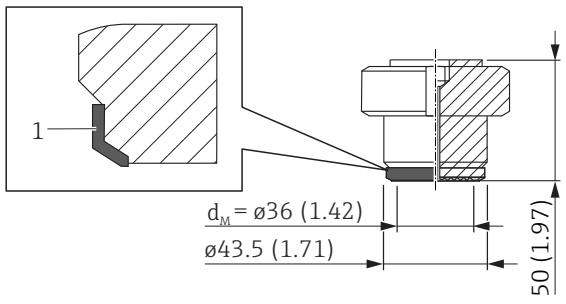

1 Silicone molded seal

Engineering unit mm (in)

Designation	Nominal pressure	Material [1]	Weight [kg (lb)]	Approval	Option [2]
Universal adapter with silicone molded seal (spare part no.: 52023572) FDA 21CFR177.2600/USP Class VI	PN 10	AISI 316L (1.4435)	0.8 (1.76)	3A, EHEDG	00 [3] [4]

1) Surface roughness of wetted surfaces R_a< 0.76 µm (29.9 µin).
2) Product Configurator, order code for "Process connection"
3) Endress+Hauser supplies these slotted nuts in stainless steel AISI 304 (DIN/EN material number 1.4301) or in AISI 304L (DIN/EN material number 1.4307).
4) Alternatively available with TempC membrane.

Process connections for PMP75 with flush-mounted process isolating diaphragm

EN/DIN flanges, connection dimensions in accordance with EN 1092-1/DIN 2527 and DIN 2501-1

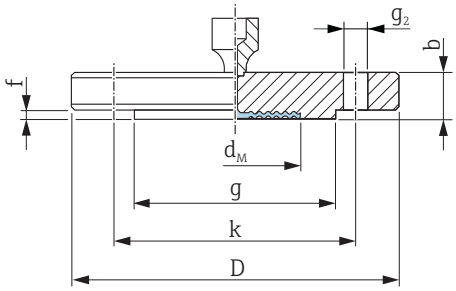

D *Diameter of flange*
b *Thickness*
g *Raised face*
f *Raised face*
k *Hole circle*
g_2 *Diameter of hole*
d_M *Max. diameter of the process isolating diaphragm*

Engineering unit mm

Flange [1) 2) 3)]							Boltholes			Diaphragm seal		Option [4)]
Nominal diameter	Nominal pressure	Shape [5)]	D	b	g	f	Number	g_2	k	d_M	Weight	
			[mm]	[mm]	[mm]	[mm]		[mm]	[mm]	[mm]	[kg (lb)]	
DN 25	PN 10-40	B1 (D)	115	18	68	3	4	14	85	32	2.1 (4.63)	CN [6)]
DN 25	PN 63-160	B2 (E)	140	24	68	2	4	18	100	28	2.5 (5.51)	DN
DN 25	PN 250	B2 (E)	150	28	68	2	4	22	105	28	3.7 (8.16)	EN
DN 25	PN 400	B2 (E)	180	38	68	2	4	26	130	28	7.0 (15.44)	E1
DN 32	PN 10-40	B1 (D)	140	18	77	2.6	4	18	100	34	1.9 (4.19)	CP
DN 40	PN 10-40	B1 (D)	150	18	87	2.6	4	18	110	48	2.2 (4.85)	CQ
DN 50	PN 10-40	B1 (D)	165	20	102	3	4	18	125	59	3.0 (6.62)	B3 [6)]
DN 50	PN 63	B2 (E)	180	26	102	3	4	22	135	59	4.6 (10.14)	C3
DN 50	PN 100-160	B2 (E)	195	30	102	3	4	26	145	59	6.2 (13.67)	EF
DN 50	PN 250	B2 (E)	200	38	102	3	8	26	150	59	7.7 (16.98)	ER
DN 50	PN 400	B2 (E)	235	52	102	3	8	30	180	59	14.7 (32.41)	E3
DN 80	PN 10-40	B1 (D)	200	24	138	3.5	8	18	160	89	5.3 (11.69)	B4 [6)]
DN 80	PN 100	B2 (E)	230	32	138	4	8	24	180	89	8.9 (19.62)	C4
DN 100	PN 100	B2 (E)	265	36	175	5	8	30	210	89	13.7 (30.21)	C5

1) material: AISI 316L
2) The roughness of the surface in contact with the medium, including raised faced of flanges (all standards) made of Alloy C276, Monel, tantalum, rhodium>gold, gold or PTFE is R_a< 0.8 µm (31.5 µin). Lower surface roughness on request.
3) The flange raised face is made of the same material as the process isolating diaphragm.
4) Product Configurator, order code for "Process connection"
5) Description as per DIN 2527 provided in brackets
6) Alternatively available with TempC membrane. Diameter of process isolating diagram modified in TempC version: DN25: 28 mm; DN50: 61 mm.

EN/DIN flanges with barrel (extended diaphragm seal), connection dimensions in accordance with EN 1092-1/DIN 2527 and DIN 2501-1

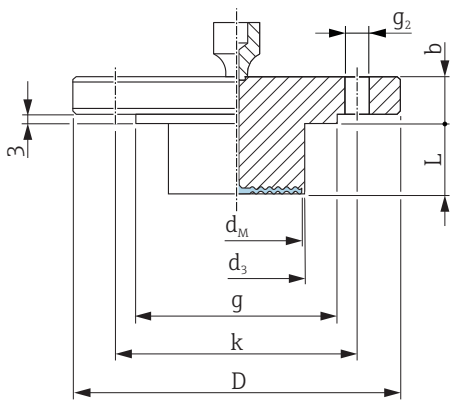

D *Diameter of flange*
b *Thickness*
g *Raised face*
k *Hole circle*
g_2 *Diameter of hole*
d_M *Max. diameter of the process isolating diaphragm*
d_3 *Barrel (extended diaphragm seal) diameter*
L *Barrel (extended diaphragm seal) length*

Engineering unit mm

Flange [1) 2)]						Boltholes			Diaphragm seal		Option [3)]
Nominal diameter	Nominal pressure	Shape [4)]	D	b	g	Number	g_2	k	d_M	Weight	
			[mm]	[mm]	[mm]		[mm]	[mm]	[mm]	[kg (lb)]	
DN 50	PN 10-40	B1 (D)	165	20	102	4	18	125	47	[5)]	D3 [5)]
DN 80	PN 10-40	B1 (D)	200	24	138	8	18	160	72	[5)]	D4 [5)]

1) Material: AISI 316L
2) In the case of process isolating diaphragms made of Alloy C276, Monel or tantalum, the raised face of the flange and the barrel pipe are made of 316L
3) Product Configurator, order code for "Process connection"
4) Description as per DIN 2527 provided in brackets
5) Available with 50 mm (1.97 in), 100 mm (3.94 in) and 200 mm (7.87 in)barrel, (extended diaphragm seal), for barrel (extended diaphragm seal) diameter and weight see the following table

Option [1)]	Nominal diameter	Nominal pressure	L	d_3	Weight
			[mm]	[mm]	[kg (lb)]
D3	DN 50	PN 10-40	50 / 100 / 200	48.3	3.2 (7.1)/ 3.8 (8.4)/ 4.4 (9.7)
D4	DN 80	PN 10-40	50 /100 / 200	76	6.2 (13.7)/ 6.7 (14.8)/ 7.8 (17.2)

1) Product Configurator, order code for "Process connection"

Process connections for PMP75 with flush-mounted process isolating diaphragm

ASME flanges, in accordance with connection dimensions ASME B 16.5, raised face RF

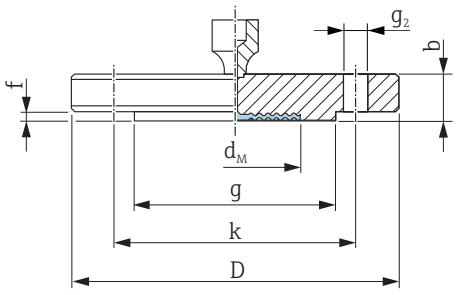

D *Diameter of flange*
b *Thickness*
g *Raised face*
f *Raised face*
k *Hole circle*
g_2 *Diameter of hole*
d_M *Max. diaphragm diameter*

Engineering unit in

Flange [1) 2) 3)]						Boltholes			Diaphragm seal		Approval [4)]	Option [5)]
Nominal diameter	Class	D	b	g	f	Number	g_2	k	d_M	Weight		
[in]	[lb./sq.in]	[in]	[in]	[in]	[in]		[in]	[in]	[in]	[kg (lb)]		
1	150	4.25	0.56	2	0.08	4	0.62	3.12	1.26	1.2 (2.65)	CRN [6)]	AC [7)]
1	300	4.88	0.69	2	0.08	4	0.75	3.5	1.26	1.3 (2.87)	CRN	AN [7)]
1	400/600	4.88	0.69	2	0.25	4	0.75	3.5	1.26	1.4 (3.09)	CRN	HC
1	900/1500	5.88	1.12	2	0.25	4	1	4	1.26	3.2 (7.06)	CRN	HN
1	2500	6.25	1.38	2	0.25	4	1	4.25	1.26	4.6 (10.14)	CRN	HO
1 ½	150	5	0.69	2.88	0.06	4	0.62	3.88	1.89	1.5 (3.31)	CRN	AE
1 ½	300	6.12	0.81	2.88	0.06	4	0.88	4.5	1.89	2.6 (5.73)	CRN	AQ
2	150	6	0.75	3.62	0.06	4	0.75	4.75	2.32	2.2 (4.85)	CRN	AF [7)]
2	300	6.5	0.88	3.62	0.06	8	0.75	5	2.32	3.4 (7.5)	CRN	AR [7)]
2	400/600	6.5	1	3.62	0.25	8	0.75	5	2.32	4.3 (9.48)	CRN	HF
2	900/1500	8.5	1.5	3.62	0.25	8	1	6.5	2.32	10.3 (22.71)	CRN	HR
2	2500	9.25	2	3.62	0.25	8	1.12	6.75	2.32	15.8 (34.84)	-	H3
3	150	7.5	0.94	5	0.06	4	0.75	6	3.5	5.1 (11.25)	CRN	AG [7)]
3	300	8.25	1.12	5	0.06	8	0.75	6	3.5	7.0 (15.44)	CRN	AS [7)]
4	150	9	0.94	6.19	0.06	8	0.75	7.5	3.5	7.2 (15.88)	CRN	AH
4	300	10	1.25	6.19	0.06	8	0.88	7.88	3.5	11.7 (25.8)	CRN	AT

1) material AISI 316/316L: Combination of AISI 316 for required pressure resistance and AISI 316L for required chemical resistance (dual rated)
2) The roughness of the surface in contact with the medium, including the raised face of the flanges (all standards) made of Alloy C276, Monel, tantalum, rhodium>gold, gold or PTFE is R_a< 0.8 µm (31.5 µin). Lower surface roughness on request.
3) The flange raised face is made of the same material as the process isolating diaphragm.
4) CSA approval: Product Configurator, order code for "Approval"
5) Product Configurator, order code for "Process connection"
6) CRN approval not for TempC membrane.
7) Alternatively available with TempC membrane. Diameter of process isolating diaphragm is modified in TempC version: nominal diameter 1": 1.1 in; 2": 2.40 in.

ASME flanges with barrel (extended diaphragm seal), connection dimensions in accordance with ASME B 16.5, raised face RF

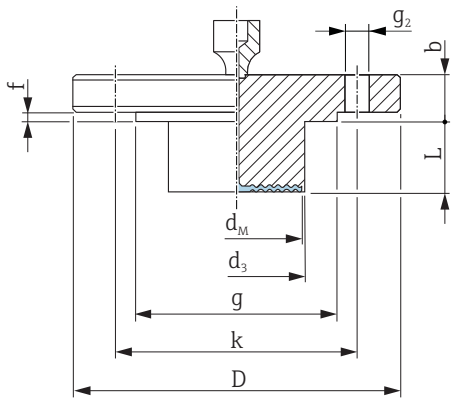

A0021683

D *Diameter of flange*
b *Thickness*
g *Raised face*
k *Hole circle*
g_2 *Diameter of hole*
d_M *Max. diameter of the process isolating diaphragm*
d_3 *Barrel (extended diaphragm seal) diameter*
L *Barrel (extended diaphragm seal) length*

Engineering unit in

Flange [1) 2)]						Boltholes			Diaphragm seal		Approval [3)]	Option [4)]
Nominal diameter	Class	D	b	g	f	Number	g_2	k	d_M	Weight		
[in]	[lb./sq.in]	[in]	[in]	[in]	[in]		[in]	[in]	[in]	[kg (lb)]		
2	150	6	0.75	3.62	0.06	4	0.75	4.75	1.85	[5)]	CRN	J3 [5)]
3	150	7.5	0.94	5	0.06	4	0.75	6	2.83	[5)]	CRN	J4 [5)]
3	300	8.25	1.12	5	0.06	8	0.88	6.62	2.83	[5)]	CRN	J7 [5)]
4	150	9	0.94	6.19	0.06	8	0.75	7.5	3.5	[5)]	CRN	J5 [5)]
4	300	10	1.25	6.19	0.06	8	0.88	7.88	3.5	[5)]	CRN	J8 [5)]

1) Material: AISI 316/316L. Combination of AISI 316 for required pressure resistance and AISI 316L for required chemical resistance (dual rated)
2) In the case of process isolating diaphragms made of Alloy C276, Monel or tantalum, the raised face of the flange and the barrel pipe are made of 316L.
3) CSA approval: Product Configurator, order code for "Approval"
4) Product Configurator, order code for "Process connection"
5) Choice of 2", 4", 6" or 8" barrel (extended diaphragm seal), for diameter and weight of barrel (extended diaphragm seal) see the following table

Option [1)]	Nominal diameter	Class	(L)	d_3	Weight
	[in]	[lb./sq.in]	in (mm)	in (mm)	[kg (lb)]
J3	2	150	2 (50.8) / 4 (101.6) / 6 (152.4) / 8 (203.2)	1.9 (48.3)	3.0 (6.6)/ 3.4 (7.5)/ 3.9 (8.6)/ 4.4 (9.7)
J4	3	150	2 (50.8) / 4 (101.6) / 6 (152.4) / 8 (203.2)	2.99 (76)	6.0 (13.2) / 6.6 (14.5) / 7.1 (15.7) / 7.8 (17.2)
J7	3	300	2 (50.8) / 4 (101.6) / 6 (152.4) / 8 (203.2)	2.99 (76)	7.9 (17.4) / 8.5 (18.7) / 9.0 (19.9) / 9.6 (21.2)
J5	4	150	2 (50.8) / 4 (101.6) / 6 (152.4) / 8 (203.2)	3.7 (94)	8.6 (19) / 9.9 (21.8) / 11.2 (24.7) / 12.4 (27.3)
J8	4	300	2 (50.8) / 4 (101.6) / 6 (152.4) / 8 (203.2)	3.7 (94)	13.1 (28.9)/ 14.4 (31.6)/ 15.7 (34.6)/ 16.9 (37.3)

1) Product Configurator, order code for "Process connection"

JIS flanges, connection dimensions in accordance with JIS B 2220 BL, raised face RF

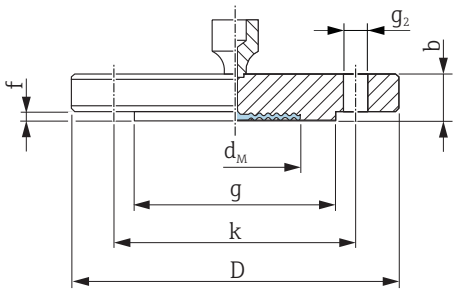

D *Diameter of flange*
b *Thickness*
g *Raised face*
f *Thickness of raised face*
k *Hole circle*
g_2 *Diameter of hole*

Engineering unit mm

Flange [1) 2) 3)]						Boltholes			Diaphragm seal		Option [4)]
Nominal diameter	Nominal pressure	D	b	g	f	Number	g_2	k	d_M	Weight	
		[mm]	[mm]	[mm]	[mm]		[mm]	[mm]	[mm]	[kg (lb)]	
25 A	10 K	125	14	67	1	4	19	90	32	1.5 (3.31)	KC
50 A	10 K	155	16	96	2	4	19	120	59	2.3 (5.07)	CF
80 A	10 K	185	18	127	2	8	19	150	89	3.3 (7.28)	KL
100 A	10 K	210	18	151	2	8	19	175	89	4.4 (9.7)	KH

1) material: AISI 316L
2) The roughness of the surface in contact with the medium, including the raised face of the flanges (all standards) made of Alloy C276, Monel, tantalum, rhodium>gold, gold or PTFE is R_a< 0.8 µm (31.5 µin). Lower surface roughness on request.
3) The flange raised face is made of the same material as the process isolating diaphragm.
4) Product Configurator, order code for "Process connection"

Process connections for PMP75

Welded separators

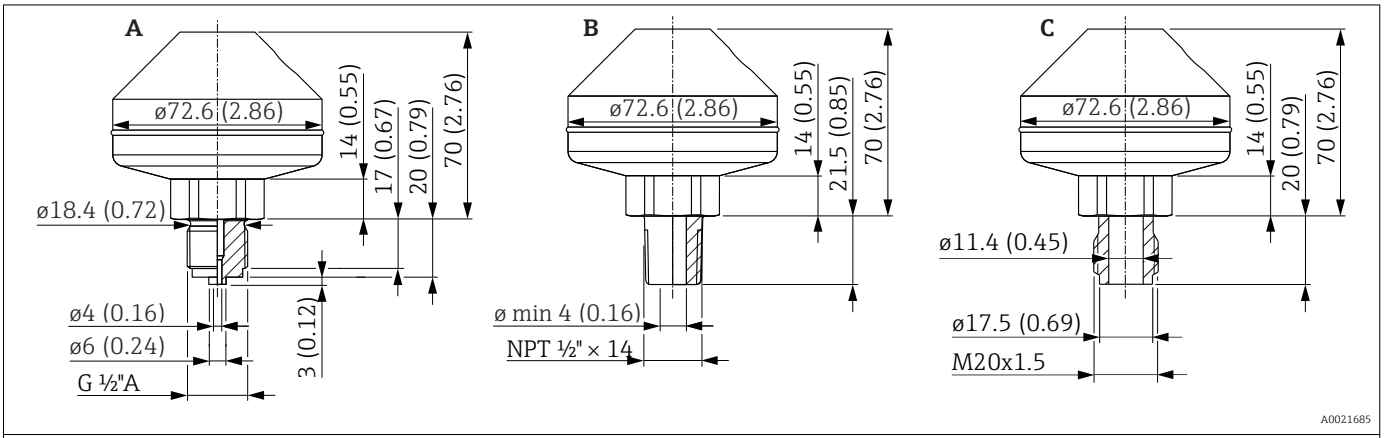

Engineering unit mm (in)

Position	Designation	Material	Measuring range [bar (psi)]	Nominal pressure	Approval	Weight [kg (lb)]	Option [1]
A	Welded, ISO 228 G ½ A EN837	AISI 316L	≤ 160 (2320)	PN 160	-	1.43 (3.15)	UA
B	Welded, ANSI ½ MNPT				CRN [2]		UB
C	Welded, thread DIN13 M20x1.5				-		UF

1) Product Configurator, order code for "Process connection"
2) CSA approval: Product Configurator, order code for "Approval"

Threaded separators

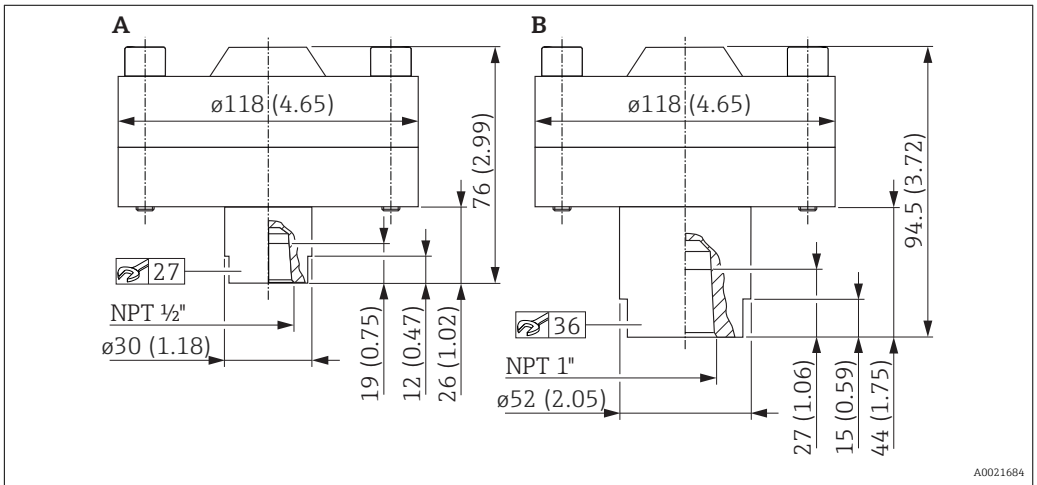

Engineering unit mm (in)

Position	Designation	Material	Measuring range [bar (psi)]	Nominal pressure	Weight [kg (lb)]	Option [1]
A	Threaded, ½" NPT with FKM Viton seal −20 to +200 °C (−4 to +392 °F)	AISI 316L screws made of A4	≤ 250 (3625)	PN 250	4.75 (10.47)	UG
B	Threaded, 1" NPT with FKM Viton seal −20 to +200 °C (−4 to +392 °F)				5.0 (11.03)	UH

1) Product Configurator, order code for "Process connection"

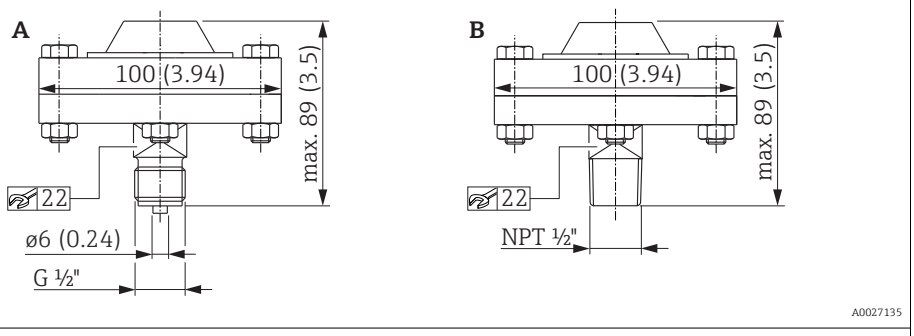

Engineering unit mm (in)

Position	Designation	Material	Measuring range [bar (psi)]	Nominal pressure	Weight [kg (lb)]	Option [1]
A	Threaded, ISO 228 G ½ A EN837 with PTFE seal −40 to +260 °C (−40 to +500 °F)	AISI 316L, screws made of A4	≤ 40 (580)	PN 40	1.43 (3.15)	UC [2]
B	Threaded, ANSI ½ MNPT with PTFE seal −40 to +260 °C (−40 to +500 °F)					UD [2]

1) Product Configurator, order code for "Process connection"
2) In combination with silicone oil, inert oil and plant oil.

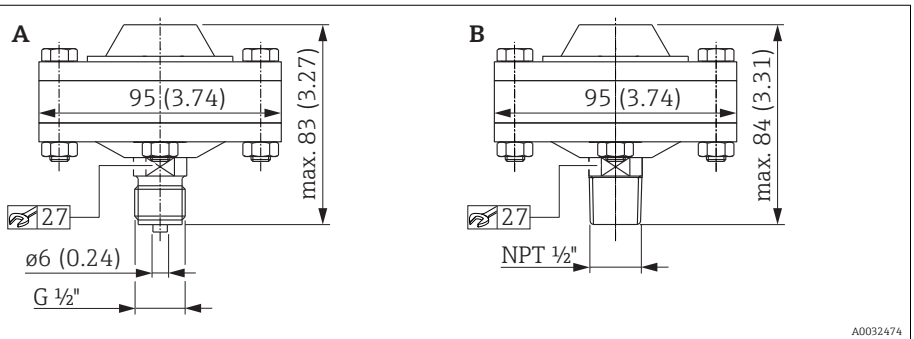

Engineering unit mm (in)

Position	Designation	Material	Measuring range [bar (psi)]	Nominal pressure	Weight [kg (lb)]	Option [1]
A	Threaded, ISO 228 G ½ A EN837 with metal seal (silver-plated) −60 to +400 °C (−76 to +752 °F)	AISI 316L, screws made of A4	≤ 40 (580)	PN 40	1.38 kg (3.04 lb)	UC [2]
B	Threaded, ANSI ½ MNPT with metal seal (silver-plated) −60 to +400 °C (−76 to +752 °F)					UD [2]

1) Product Configurator, order code for "Process connection"
2) In combination with high-temperature oil.

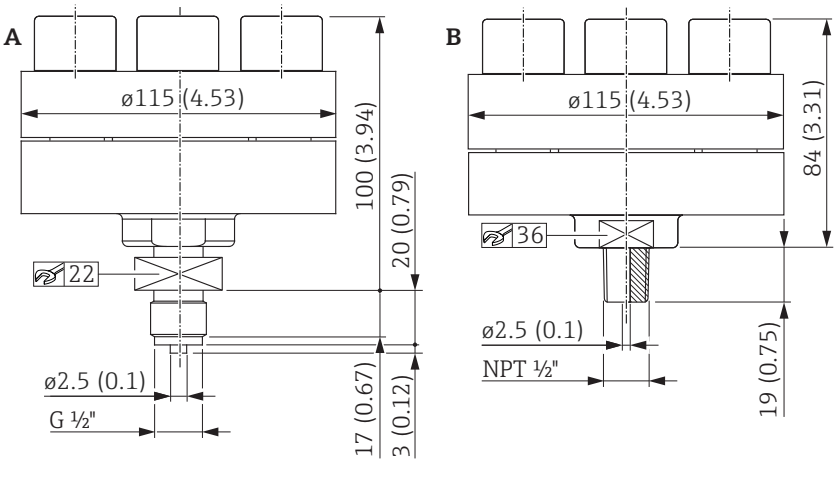

Engineering unit mm (in)

Position	Designation	Material	Measuring range [bar (psi)]	Nominal pressure [1]	Weight [kg (lb)]	Option [2]
A	Threaded, ISO 228 G ½ A EN837, with integrated seal lip −60 to +400 °C (−76 to +752 °F)	AISI 316L, screws made of A4	> 40 bar (580)	PN 400	4.75 (10.47)	UC
B	Threaded, ANSI ½ MNPT, with integrated seal lip −60 to +400 °C (−76 to +752 °F)					UD

1) This separator is assembled prior to delivery and must not be disassembled!
2) Product Configurator, order code for "Process connection"

Separate housing: Wall and pipe mounting with mounting bracket

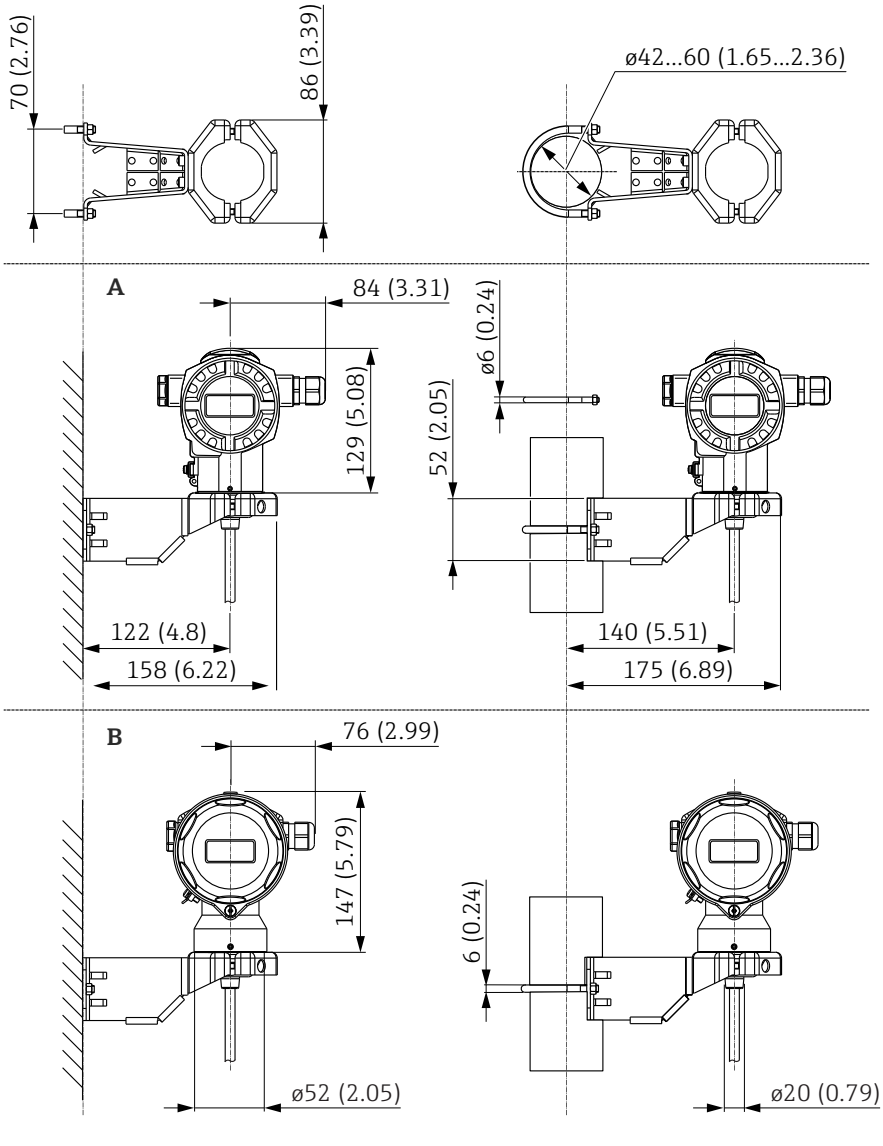

Engineering unit mm (in)

Position	Designation	Weight in kg (lb)		Option [1]
		Housing (T14 or T17)	Mounting bracket	
A	Dimensions with T14 housing, optional side display	→ 🖹 55	0.5 (1.10)	U
B	Dimensions with T17 housing, optional side display			

1) Product Configurator, order code for "Additional options 2", version "G"

Also available for order as a separate accessory: Part number 71102216

Materials not in contact with process

Transmitter housing

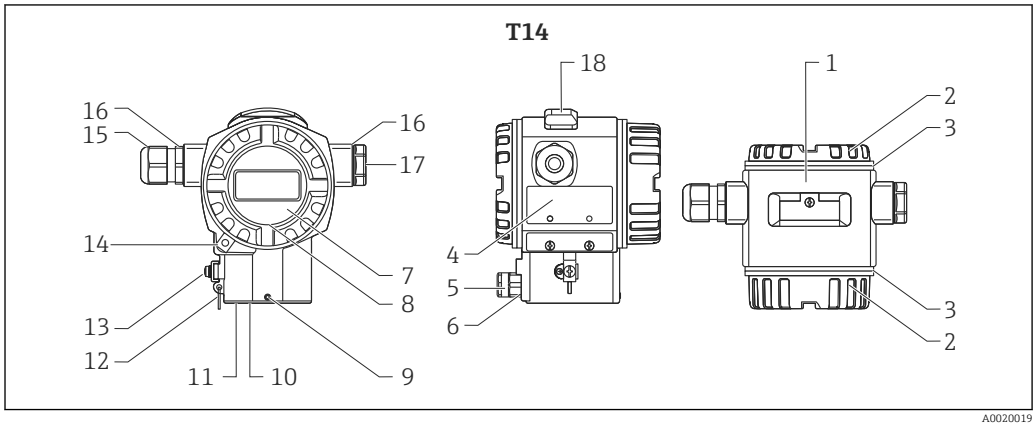

A0020019

Item number	Component part	Material
1	T14 housing, RAL 5012 (blue)	▪ Die-cast aluminum with protective powder-coating on polyester base ▪ Thread coating: Heat-curing lubricant varnish
1	T14 housing	▪ Precision casting AISI 316L (1.4435) ▪ Thread coating: Heat-curing lubricant varnish
2	Cover, RAL 7035 (gray)	Die-cast aluminum with protective powder-coating on polyester base
3	Cover seal	EPDM
4	Nameplates	▪ AISI 316L (1.4404), if T14 housing is precision-cast ▪ Anodized aluminum, if housing T14/T15 of die-cast aluminum
5	Pressure compensation filter	AISI 316L (1.4404) and PBT-FR
6	Pressure compensation filter, O-ring	VMQ or EPDM
7	Sight glass	Mineral glass
8	Sight glass seal	Silicone (VMQ)
9	Screw	A4
10	Sealing ring	EPDM
11	Snap ring	PA66-GF25
12	Snap ring for nameplates	AISI 304 (1.4301)/AISI 316 (1.4401)
13	External ground terminal	AISI 304 (1.4301)
14	Cover clamp	Clamp AISI 316L (1.4435), screw A4
15	Cable entry	Polyamide (PA) or CuZn nickel-plated
16	Seal of cable entry and plug	Silicone (VMQ)
17	Blind plug	PBT-GF30 FR, for dust ignition-proof: AISI 316L (1.4435)
18	External operation (keys and key cover), RAL 7035 (gray)	Polycarbonate PC-FR, screw A4
Devices with MID parts certificate	Seal wire	DIN 1367-0 St/Zn (soft galvanized steel)
Devices with MID parts certificate	Seals	Pb (lead)

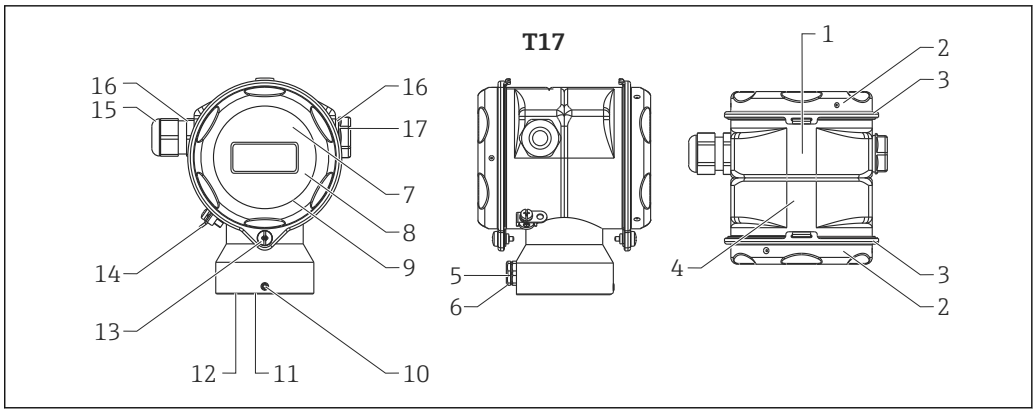

A0020021

Item number	Component part	Material
1	T17 housing	AISI 316L (1.4404)
2	Cover	
3	Cover seal	EPDM
4	Nameplates	Lasered on
5	Pressure compensation filter	AISI 316L (1.4404) and PBT-FR
6	Pressure compensation filter, O-ring	VMQ or EPDM
7	Sight glass for non-hazardous area, ATEX Ex ia, NEPSI Zone 0/1 Ex ia, IECEx Zone 0/1 Ex ia, FM NI, FM IS, CSA IS	Polycarbonate (PC)
8	Sight glass for ATEX 1/2 D, ATEX 1/3 D, ATEX 1 GD, ATEX 1/2 GD, ATEX 3 G, FM DIP, CSA dust ignition-proof	Mineral glass
9	Sight glass seal	EPDM
10	Screw	A2-70
11	Sealing ring	EPDM
12	Snap ring	PA6
13	Screw	A4-50 Thread coating: Heat-curing lubricant varnish
14	External ground terminal	AISI 304 (1.4301)
15	Cable entry	Polyamide PA, for dust ignition-proof: CuZn nickel-plated
16	Seal of cable entry and plug	Silicone (VMQ)
17	Blind plug	PBT-GF30 FR, for dust ignition-proof: AISI 316L (1.4435)
Devices with MID parts certificate	Seal wire	DIN 1367-0 St/Zn (soft galvanized steel)
Devices with MID parts certificate	Seals	Pb (lead)

Connecting parts

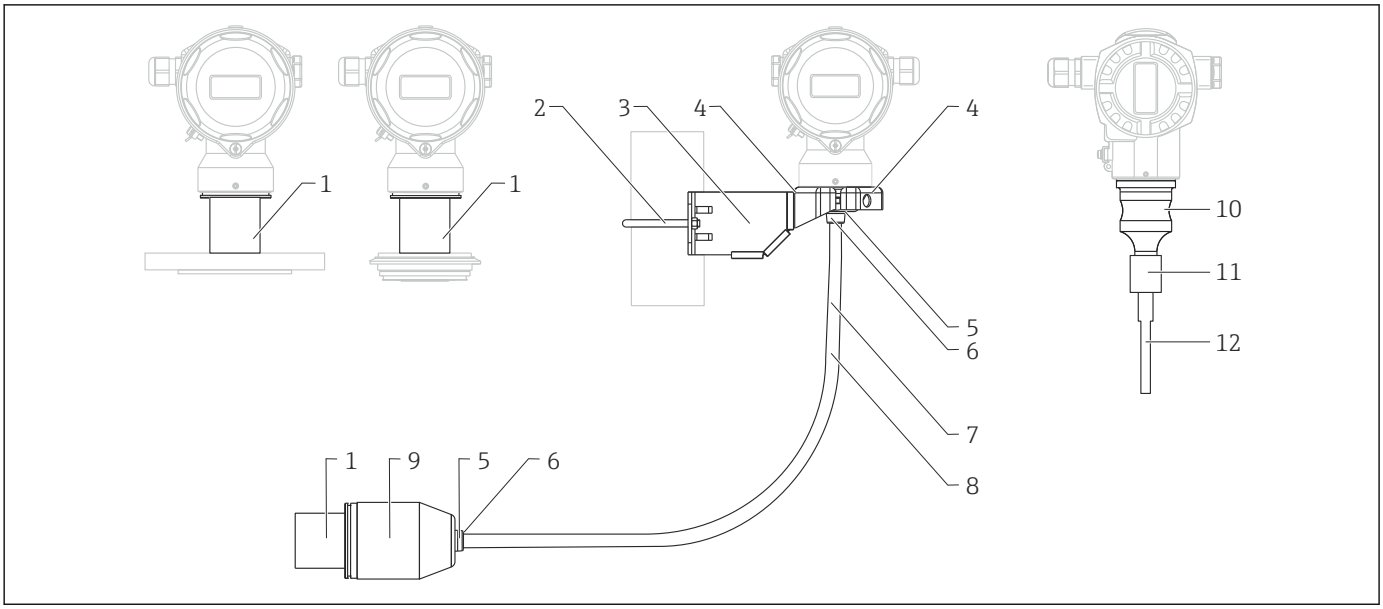

A0028222

Item number	Component part	Material
1	Connection between the housing and process connection	AISI 316L (1.4404)
2	Mounting bracket	Bracket AISI 316L (1.4404)
3		Screw and nuts A4-70
4		Half-shells: AISI 316L (1.4404)
5	Seal for cable from separate housing	EPDM
6	Gland for cable from separate housing	AISI 316L (1.4404)
7	PE cable for separate housing	abrasion-proof cable with strain-relief Dynema members; shielded using aluminum-coated foil; insulated with polyethylene (PE-LD), black; copper wires, twisted, UV-resistant
8	FEP cable for separate housing	Abrasion-proof cable; shielded using galvanized steel wire netting; insulated with fluorinated ethylene propylene (FEP), black; copper cores, twisted, UV-resistant
9	Process connection adapter for separate housing	AISI 316L (1.4404)
10	Cell body	AISI 316L (1.4404)
11	Connection between body of measuring cell and capillary	AISI 316L (1.4404)
12	Heat-shrink tube (available only if capillary has PTFE or PVC sheath)	Polyolefin

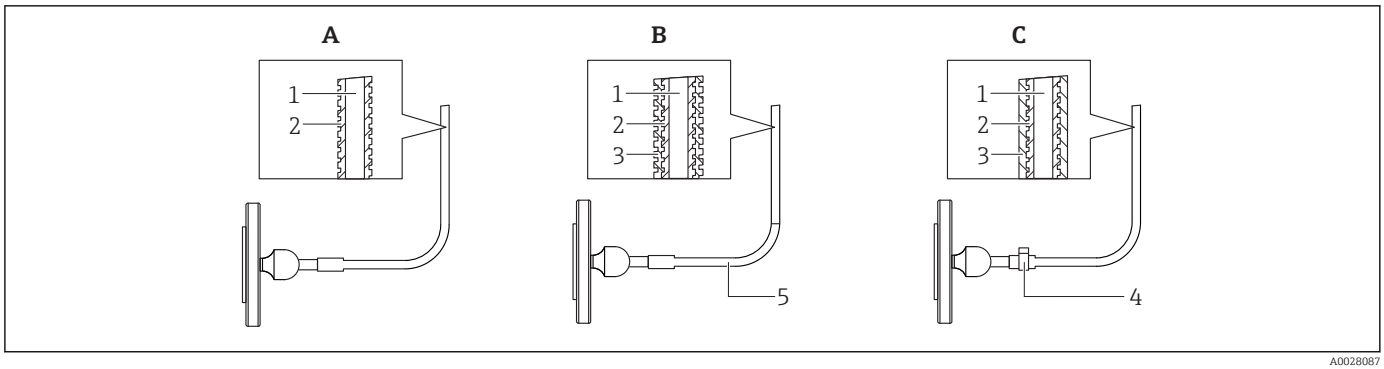

A0028087

Position	Component part	A Standard [1] Armor for capillary	B PVC-coated Armor for capillary	C PTFE hose Armor for capillary
1	Capillary	AISI 316 Ti (1.4571)	AISI 316 Ti (1.4571)	AISI 316 Ti (1.4571)
2	Flexible armor for capillary	AISI 316L (1.4404) [2]	AISI 316L (1.4404)	AISI 316L (1.4404)
3	Coating/armor	-	PVC [3]	PTFE [4]
4	Single-ear clamp	-	-	1.4301
5	Shrink tubing at capillary junction	-	Polyolefin	-

1) If no option is specified when ordering, order option "SA" is supplied.
2) Product Configurator, order code for "Capillary armoring:" option "SA"
3) Product Configurator, order code for "Capillary armoring:" option "SB"
4) Product Configurator, order code for "Capillary armoring:" option "SC"

Weight

Component part	Weight
Housing	See "Housing" section
Process connection	See "Process connections" section
Capillary with armoring made of AISI 316L (1.4404)	0.16 kg/m (0.35 lb/m) + 0.35 kg (0.77 lb)
Capillary with armoring made of AISI 316L (PVC)	0.21 kg/m (0.46 lb/m) + 0.35 kg (0.77 lb)
Capillary with armoring made of AISI 316L (PTFE)	0.29 kg/m (0.64 lb/m) + 0.35 kg (0.77 lb)

Materials in contact with process

NOTICE

- The device components in contact with the process are specified in the "Mechanical construction" → 54 and "Ordering information" → 123 sections.

Delta-ferrite content

A delta-ferrite content of ≤ 3% can be guaranteed and certified for the wetted parts if option "8" is selected in the "Additional options 1" or "Additional options 2" order code in the Product Configurator.

If the PMC71 with hygienic process connections is selected, a delta-ferrite content of ≤ 1% can be guaranteed and certified if option "8" is selected in the "Additional options 1" or "Additional options 2" order code in the Product Configurator.

TSE Certificate of Suitability (Transmissible Spongiform Encephalopathy)

The following applies to all device components in contact with the process:

- They do not contain any materials derived from animals.
- No additives or operating materials derived from animals are used in production or processing.

Process connections

- "Clamp connections" and "Hygienic process connections": AISI 316L (DIN/EN material number 1.4435)
- Endress+Hauser supplies process connections with a threaded connection as well as DIN/ EN flanges made of stainless steel as per AISI 316L (DIN/EN material number 1.4404 or 1.4435). With regard to their stability-temperature property, the materials 1.4404 and 1.4435 are grouped together under 13E0 in EN 1092-1: 2001 Tab. 18. The chemical composition of the two materials can be identical.
- Some process connections are also available in alloy C276 (DIN/EN material number 2.4819). For this purpose see the information in the "Mechanical construction" section.

Process isolating diaphragm

Sensor	Designation	Option [1]
PMC71	Al_2O_3 aluminum-oxide ceramic FDA, ultra-pure 99.9 % [2] Ceraphire® (see also www.endress.com/ceraphire)	Standard
PMP71	AISI 316L	1
	AISI 316L with gold-rhodium coating	6
	Alloy C276 (2.4819)	2
PMP75	AISI 316L	1
	AISI 316L, TempC	E
	AISI 316L with gold-rhodium coating	6
	AISI 316L with 0.25 mm (0.01 in) PTFE coating	8
	Alloy C276 (2.4819)	2 [3]
	Monel (2.4360)	3 [3]
	AISI 316L with gold coating	4
	Tantalum (UNS R05200)	5 [3]

1) Product Configurator, order code for "Membrane material"
2) The US Food & Drug Administration (FDA) has no objections to the use of ceramics made of aluminum oxide as a surface material in contact with foodstuffs. This declaration is based on the FDA certificates of our ceramic suppliers
3) The material of the flange raised face is the same material as is used for the process isolating diaphragm. For devices with a barrel (extended diaphragm seal), the flange raised face and the barrel pipe are made of 316L.

Seals

Device	Designation	Option [1]
PMC71	FKM Viton	A
	FKM Viton, FDA	G
	EPDM	B
	FFKM Perlast G75LT	C
	Kalrez	D
	Chemraz	E
	NBR (FDA)/3A: HNBR (FDA)	F
	FKM Viton, cleaned for PWIS-free applications	L
	Kalrez, cleaned for PWIS-free applications	M
	FKM Viton, cleaned from oil and grease	1
	FKM Viton, cleaned for oxygen service, note pressure and temperature application limits	2

1) Product Configurator, "Seal" ordering feature

Fill fluid

PMP71

Designation	Option [1]
Silicone oil	A
Inert oil	F
Inert oil, cleaned from oil and grease	K
Inert oil, cleaned for oxygen service (observe application limits pressure/temperature)	N

1) Product Configurator, order code for "Fill fluid"

PMP75

Designation	Option [1] [2]
Silicone oil (food-safe FDA 21 CFR 175.105)	A
...m capillary, inert oil	B
...ft capillary, inert oil	C
Vegetable oil (food-safe FDA 21 CFR 172.856)	D
Inert oil	F
High-temperature oil, temperature isolator	G
Silicone oil, temperature isolator (food-safe FDA 21 CFR 175.105)	H
Vegetable oil, temperature isolator	J
Inert oil, cleaned from oil and grease	K
Inert oil, cleaned for oxygen service	N
...m capillary, silicone oil (food-safe FDA 21 CFR 175.105)	1
...ft capillary, silicone oil (food-safe FDA 21 CFR 175.105)	2
...m capillary, high-temperature oil	3
...ft capillary, high-temperature oil	4
...m capillary, vegetable oil (food-safe FDA 21 CFR 172.856)	5
...ft capillary, vegetable oil (food-safe FDA 21 CFR 172.856)	6
...m capillary, low-temperature oil	7
...ft capillary, low-temperature oil	8

1) Product Configurator, order code for "Fill fluid"
2) For diaphragm seal devices with 3-A and EHEDG certificates, only select filling oils with FDA approval!

Operability

Operating concept

Operator-oriented menu structure for user-specific tasks

- Commissioning
- Operation
- Diagnosis

Fast and safe commissioning

Guided menus for applications

Reliable operation

- Local operation possible in several languages
- Standardized operation at the device and in the operating tools
- Parameters relating to measured values can be locked/unlocked using the device's write protection switch, using the device software or via remote operation

Efficient diagnostics increase measurement availability

- Remedial measures are integrated in plain text
- Diverse simulation options

Local operation

Functions

Function	External operation (operating keys, optional, not T17 housing)	Internal operation (electronic insert)	Onsite display (optional)
Position adjustment (zero point correction)	✔	✔	✔
Setting lower-range value and upper-range value - reference pressure present at the device	✔ (HART only)	✔ (HART only)	✔
Device reset	✔	✔	✔
Locking and unlocking parameters relevant to the measured value	—	✔	✔
Value acceptance indicated by green LED	✔	✔	✔
Switching damping on and off	✔ (only if display is connected)	✔ (HART and PA only)	✔
Configuring the bus address of the device (PA)	—	✔	✔
Switching simulation mode on and off (FOUNDATION Fieldbus)	—	✔	✔

Operating the device using onsite display (optional)

A 4-line liquid crystal display (LCD) is used for display and operation. The onsite display shows measured values, dialog text as well as fault and notice messages in plain text, thereby supporting the user in every stage of operation.

The display can be removed for easy operation.

The device display can be turned in 90° steps.

Depending on the installation position of the device, this makes it easy to operate the device and read the measured value.

Functions:
- 8-digit measured value display including sign and decimal point and bar graph for
  - 4 to 20 mA HART (bar graph from 4 to 20 mA)
  - 1-5V DC (bar graph from 1 to 5 volt)
  - PROFIBUS PA (bar graph as graphic display of standardized value of AI block)
  - FOUNDATION Fieldbus (bar graph as graphic display of transducer output).
-
- Simple and complete menu guidance due to breakdown of parameters into several levels and groups
- Menu guidance in up to 8 languages
- Each parameter is given a 3-digit ID number for easy navigation.
- Option for configuring the display according to individual requirements and preferences, such as language, alternating display, display of other measured values such as sensor temperature, contrast setting.
- Comprehensive diagnostic functions (fault and warning message, peak-hold indicators, etc.).
- Rapid and safe commissioning with the Quick Setup menus

Overview

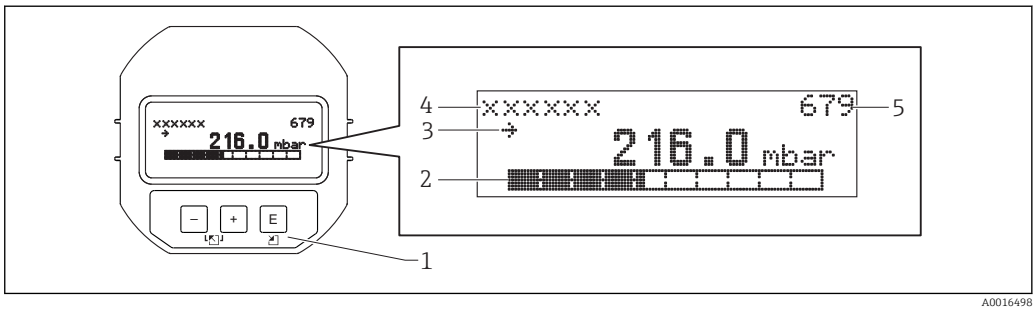

A0016498

1 Operating keys
2 Bargraph
3 Symbol
4 Header
5 Parameter ID number

Operating keys on the exterior of the device

With the aluminum housing (T14), the operating keys are located either outside on the housing, under the protection cap or inside on the electronic insert. With the stainless steel housing (T17), the operating keys are always located inside the housing on the electronic insert.

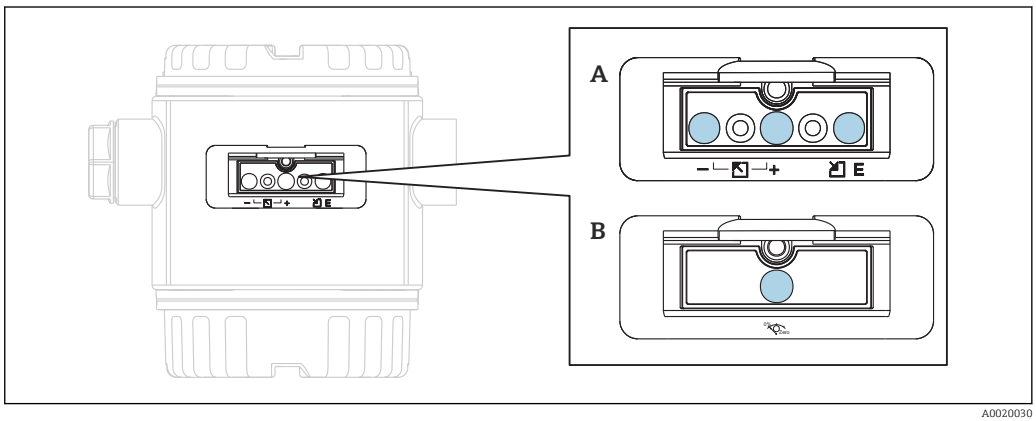

A0020030

A 1-5V DC and 4 to 20 mA HART
B PROFIBUS PA and FOUNDATION Fieldbus

The operating keys located externally on the device work on the Hall sensor principle. As a result, no additional openings are required in the device. This guarantees:

- Complete protection against environmental influences such as moisture and contamination.
- Simple operation without any tools.
- No wear.

Ordering information:

Product Configurator, order code for "Output, operation"

Operating keys and elements located internally on the electronic insert

Ordering information:

Product Configurator, order code for "Output, operation"

HART

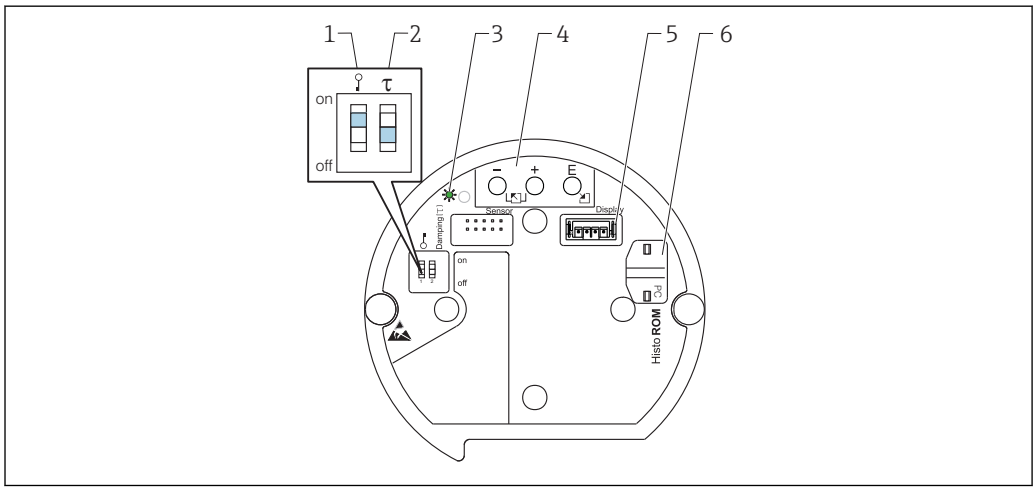

A0020031

1 DIP switch for locking/unlocking parameters relevant to the measured value
2 DIP switch for switching damping on/off
3 Green LED to indicate value being accepted
4 Operating keys
5 Slot for optional display
6 Slot for optional HistoROM®/M-DAT

1-5V DC

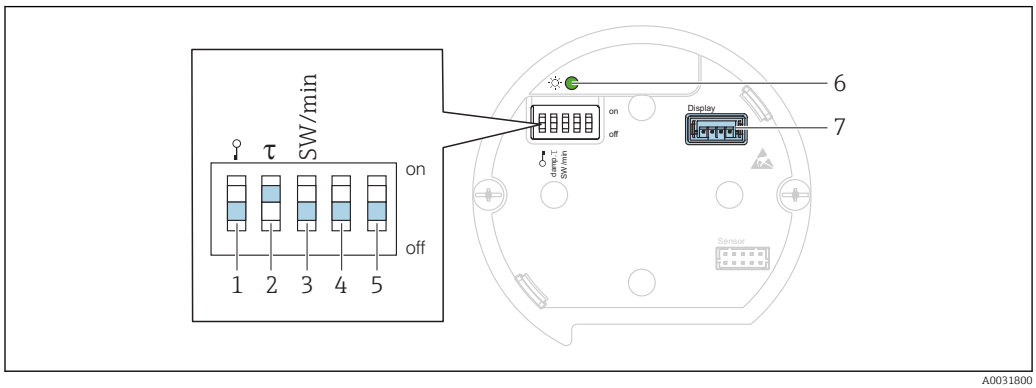

A0031800

1 DIP switch for locking/unlocking parameters relevant to the measured value
2 DIP switch for switching damping on/off
3 DIP switch for alarm voltage/alarm current SW / alarm min (0.9 V/~3.6 mA)
4...5 Not assigned
6 Green LED to indicate value being accepted
7 Slot for display

PROFIBUS PA

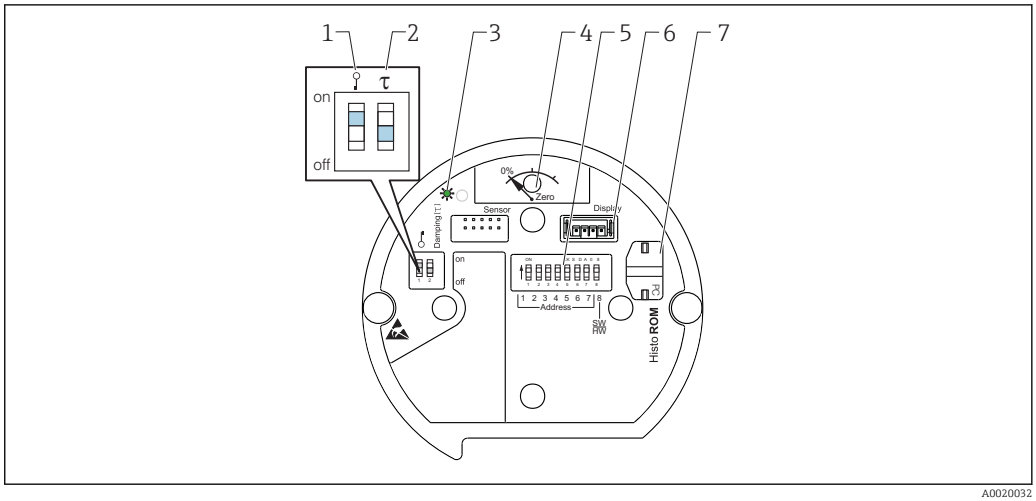

1 *DIP switch for locking/unlocking parameters relevant to the measured value*
2 *DIP switch for switching damping on/off*
3 *Green LED to indicate value being accepted*
4 *Key for position adjustment and device reset*
5 *DIP switch for bus address*
6 *Slot for optional display*
7 *Slot for optional HistoROM®/M-DAT*

FOUNDATION Fieldbus

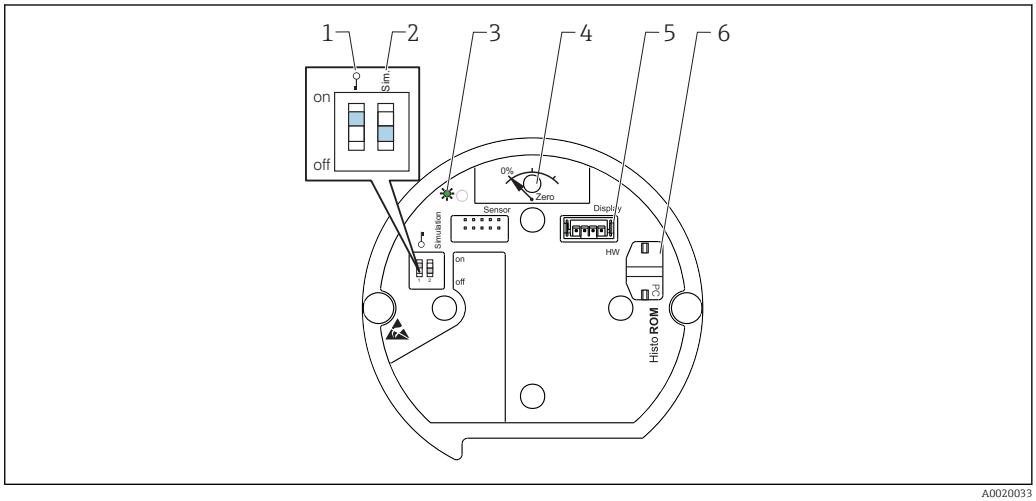

1 *DIP switch for locking/unlocking parameters relevant to the measured value*
2 *DIP switch for simulation mode on/off*
3 *Green LED to indicate value being accepted*
4 *Key for position adjustment and device reset*
5 *Slot for optional display*
6 *Slot for optional HistoROM®/M-DAT*

Remote operation

All software parameters are accessible depending on the position of the write protection switch on the device.

Hardware and software for remote operation [1]	HART	PROFIBUS PA	FOUNDATION Fieldbus
FieldCare	✔	✔	✔
FieldXpert SFX100	✔	–	✔

Hardware and software for remote operation [1]	HART	PROFIBUS PA	FOUNDATION Fieldbus
NI-FBUS Configurator	–	–	✔
HistoROM®/M-DAT	✔	✔	✔

1) Not for 1-5V DC

FieldCare

FieldCare is an Endress+Hauser asset management tool based on FDT technology. With FieldCare, you can configure all Endress+Hauser devices as well as devices from other manufacturers that support the FDT standard.

FieldCare supports the following functions:
- Configuration of transmitters in offline and online mode
- Device data upload/download (not for 1-5V DC)
- HistoROM®/M-DAT analysis
- Documentation of the measuring point

Connection options:
- HART via Commubox FXA195 and the USB interface of a computer
- PROFIBUS PA via segment coupler and PROFIBUS interface card
- Service interface with Commubox FXA291 and ToF adapter FXA291 (USB).

For further information please contact your local Endress+Hauser Sales Center.

Field Xpert SFX100

Field Xpert is an industrial PDA with integrated 3.5" touchscreen from Endress+Hauser based on Windows Mobile. It offers wireless communication via the optional VIATOR Bluetooth modem from Endress+Hauser. Field Xpert also works as a stand-alone device for asset management applications. For details, refer to BA00060S/04/EN.

Commubox FXA195

For intrinsically safe HART communication with FieldCare via the USB interface. For details refer to TI00404F/00/EN.

Commubox FXA291

The Commubox FXA291 connects Endress+Hauser field devices with a CDI interface (=Endress +Hauser Common Data Interface) to the USB interface of a personal computer or a notebook. For details refer to TI00405C/07/EN.

For the following Endress+Hauser devices you need the "ToF adapter FXA291" as an additional accessory:
- Cerabar S PMC71, PMP7x
- Deltabar S PMD7x, FMD7x
- Deltapilot S FMB70

ToF adapter FXA291

The ToF adapter FXA291 connects the Commubox FXA291 with devices of the ToF platform, pressure equipment and Gammapilot via the USB interface of a personal computer or a notebook. For details refer to KA00271F.

Profiboard

For connecting a PC to PROFIBUS.

Proficard

For connecting a laptop to PROFIBUS.

FF configuration program

FF configuration program, such as NI-FBUS Configurator, to
- connect devices with "FOUNDATION Fieldbus signal" into an FF network
- set FF-specific parameters

Remote operation via the NI-FBUS Configurator:

The NI-FBUS Configurator is an easy-to-use graphical environment for creating linkages, field-based control loops and schedules based on the FOUNDATION Fieldbus concept.

You can use the NI-FBUS Configurator to configure a fieldbus network as follows:
- Set block and device tags
- Set device addresses
- Create and edit function block control strategies (function block applications)
- Configure vendor-defined function and transducer blocks
- Create and edit schedules
- Read and write to function block control strategies (function block applications)
- Invoke Device Description (DD) methods
- Display DD menus
- Download a configuration
- Verify a configuration and compare it to a saved configuration
- Monitor a downloaded configuration
- Replace a virtual device by a real device
- Save and print a configuration

HistoROM®/M-DAT (optional)

The HistoROM®/M-DAT is a memory module that can be attached to any electronic insert (not for 1-5V DC). HistoROM®/M-DAT can be retrofitted at any stage (order number: 52027785).

Your benefits
- Quick and safe commissioning of the same measuring points by copying the configuration data of one transmitter to another transmitter
- Reliable process monitoring thanks to cyclical recording of pressure and sensor temperature measured values
- Simple diagnosis by recording diverse events such as alarms, configuration changes, counters for measuring range undershoot and overshoot for pressure and temperature as well as user limit overshoot and undershoot for pressure and temperature etc.
- Analysis and graphic evaluation of the events and process parameters via software (contained in scope of supply).

A CD with an Endress+Hauser operating program is also included in the scope of delivery. You can copy data from one transmitter to another transmitter when operating a FOUNDATION Fieldbus device via an FF configuration program. You need the Endress+Hauser FieldCare operating program, the Commubox FXA291 service interface and the ToF adapter FXA291 to be able to access the data and events saved in the HistoROM®/M-DAT.

Ordering information:

Product Configurator, order code for "Additional options:", version "N" or

Product Configurator, order code for "Application package:", option "EN" or

as a separate accessory (part no.: 52027785).

For further information please contact your local Endress+Hauser Sales Center.

System integration

The device can be given a tag name (max. 8 alphanumeric characters).

Description	Option [1]
Measuring point (TAG), see additional spec.	Z1
Bus address, see additional spec.	Z2

1) Product Configurator, order code for "Identification"

Planning instructions, diaphragm seal systems

NOTICE

Incorrect sizing/ordering of diaphragm seal systems

The performance and the permitted range of application of a diaphragm seal system depend on the process isolating diaphragm used, the filling oil, the coupling, the unit design and on the process and ambient conditions present in the individual application.

- ▶ To help you select the right diaphragm seal systems for your particular applications, Endress +Hauser provides its customers with the "Applicator Sizing Diaphragm Seal" selection tool, which is available free of charge at "www.endress.com/applicator" or as a download.

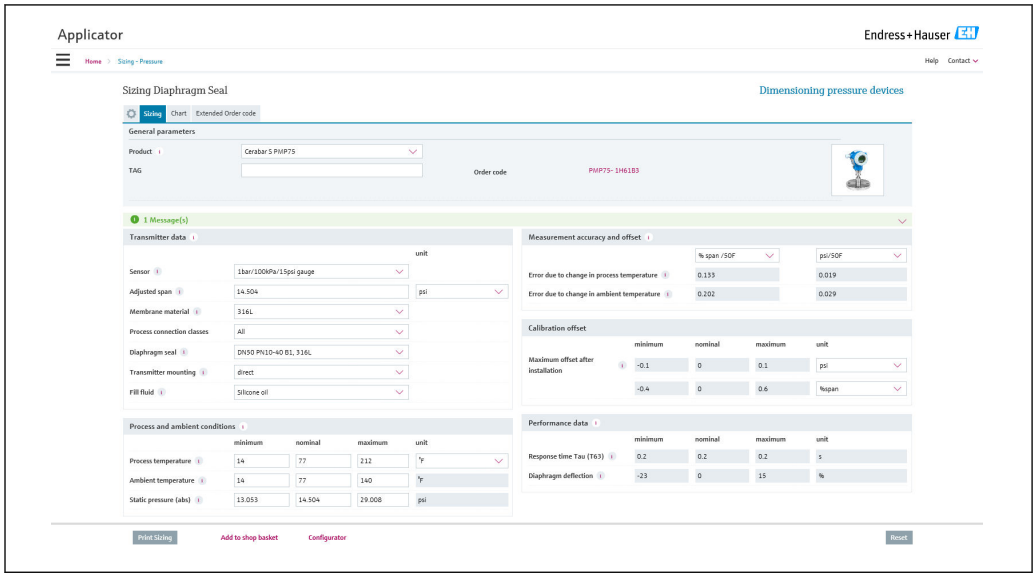

A0034616

For more detailed information or the layout of the optimum diaphragm seal solution for your application, please contact your local Endress+Hauser Sales Center.

Applications

Diaphragm seal systems should be used if the process and the device should be separated. Diaphragm seal systems offer clear advantages in the following instances:

- In the case of extreme process temperatures
- For aggressive media
- In the case of process media that crystallize
- In the case of corrosive or highly various process media or process media with solids content
- In the case of heterogeneous and fibrous process media
- If extreme measuring point cleaning is necessary, or for very humid mounting locations
- If the measuring point is exposed to severe vibrations
- For mounting locations that are difficult to access

Design and operation mode

Diaphragm seals are separating equipment between the measuring system and the process.

A diaphragm seal system consists of:
- A diaphragm seal
- A capillary tube or temperature isolator if necessary
- Fill fluid
- A pressure transmitter

The process pressure acts via the process isolating diaphragm of a diaphragm seal on the liquid-filled system, which transfers the process pressure onto the sensor of the pressure transmitter.

Endress+Hauser delivers all diaphragm seal systems as welded versions. The system is hermetically sealed, which ensures the highest reliability.

The diaphragm seal determines the application range of the system by:
- The diameter of the process isolating diaphragm
- The stiffness and material of the process isolating diaphragm
- The design (oil volume)

Diameter of the process isolating diaphragm

The greater the diameter of the process isolating diaphragm (less stiff), the smaller the temperature effect on the measurement result.

Stiffness of the process isolating diaphragm

The stiffness depends on the diameter of the process isolating diaphragm, the material, any existing coating and the thickness and shape of the process isolating diaphragm. The thickness of the process isolating diaphragm and the shape are determined by the design. The stiffness of a process isolating diaphragm of a diaphragm seal influences the temperature operating range and the measuring error caused by temperature effects.

The Endress+Hauser TempC membrane: Highest accuracy and process safety when measuring pressure and differential pressure using diaphragm seals

To measure even more precisely in such applications and to increase process safety, Endress+Hauser has developed the TempC membrane based on a completely revolutionary technology. This membrane guarantees the highest level of accuracy and process safety in diaphragm seal applications.
- The very low temperature effect minimizes the influence of fluctuations of both process and ambient temperatures, thus guaranteeing accurate and stable measurements. Measurement inaccuracies caused by temperature are reduced to a minimum.
- The TempC membrane can be used at temperatures between −70 °C (−94 °F) and +400 °C (+752 °F). This guarantees maximum process safety even for very long sterilization and cleaning cycles (SIP/CIP) in tanks and pipes at high temperatures.
- Thanks to the TempC membrane, smaller dimension process connections are possible. With a smaller process connection, the new membrane measures at least as accurately as a conventional membrane with a larger diameter.
- Due to the geometry of the membrane, an overshoot occurs initially immediately following a temperature shock. This results in a transient response, the duration and deviation of which are significantly less compared to traditional membrane types. In the case of batch processes, these shorter recovery times mean a far higher level of availability of the production facilities. For TempC membranes, the effect of the overshoot on the output signal can be reduced by adjusting the damping.

Ordering information:

See the Product Configurator for the individual process connection and the choice of process isolating diaphragm.

Selection in the Applicator:

Under "Transmitter data" in the "Membrane material" field.

Capillary

As standard, capillaries with an internal diameter of 1 mm (0.04 in) are used.

The capillary tube influences the thermal change, the ambient temperature operating range and the response time of a diaphragm seal system as a result of its length and internal diameter.

Filling oil

When selecting the filling oil, the media and ambient temperature as well as the operating pressure are of crucial importance. Observe the temperatures and pressures during commissioning and cleaning. A further selection criterion is the compatibility of the filling oil with the requirements of the process media. For this reason, only filling oils that are harmless to health may be used in the food industry, such as vegetable oil or silicone oil (see also the following section on "diaphragm seal filling oils").

The filling oil used influences the thermal change, the temperature operating range of a diaphragm seal system and the response time. A temperature change results in a volume change of the filling oil. The volume change is dependent on the expansion coefficient and on the volume of the filling oil at calibration temperature (constant in range: +21 to +33 °C (+70 to +91 °F)). The application range can be extended by a filling oil with a lower expansion coefficient and a shorter capillary.

For example, the filling oil expands in the event of a temperature increase. The additional volume presses against the process isolating diaphragm of a diaphragm seal. The stiffer a process isolating diaphragm is, the greater its return force, which counteracts a volume change and acts on the measuring cell together with the operating pressure, thus shifting the zero point.

Pressure transmitter

The pressure transmitter influences the temperature operating range, the TK zero point and the response time as a result of its volume change. The volume change is the volume that has to be shifted to pass through the complete measuring range.

Pressure transmitters from Endress+Hauser are optimized with regard to minimum volume change.

Diaphragm seal filling oils

Filling oil	Permissible temperature range [1] at 0.05 bar (0.725 psi) ≤ p_{abs} ≤ 1 bar (14.5 psi)	Permitted temperature range [1] at p_{abs} ≥1 bar (14.5 psi)	Option [2]
Silicone oil	−40 to +180 °C (−40 to +356 °F)	−40 to +250 °C (−40 to +482 °F)	A, H, 1 or 2
High-temperature oil	−10 to +200 °C (+14 to +392 °F)	−10 to +400 °C (+14 to +752 °F) [3) 4) 5)]	G, 3 or 4
Inert oil	−40 to +80 °C (−40 to +176 °F)	−40 to +175 °C (−40 to +347 °F)	F or N
Vegetable oil	−10 to +120 °C (+14 to +248 °F)	−10 to +200 °C (+14 to +392 °F)	D, 5 or 6
Low-temperature oil	−70 to +80 °C (−94 to +176 °F)	−70 to +180 °C (−94 to +356 °F)	7 or 8

1) Observe temperature limits of the device and of the system
2) Product Configurator, “Fill fluid” ordering feature
3) 325 °C (617 °F) at ≥1 bar (14.5 psi)absolute pressure.
4) 350 °C (662 °F) at ≥1 bar (14.5 psi) absolute pressure (max. 200 hours).
5) 400 °C (752 °F) at ≥1 bar (14.5 psi) absolute pressure (max. 10 hours).

Additional data:

Filling oil	Density [g/cm3] / [SGU]	Viscosity [mm²/s] / [cSt] at 25 °C (77 °F)	Expansion coefficient [1] [1/K]	Notes [2]	Option [3]
Silicone oil	0.96	100	0.00096	suitable for foods FDA 21 CFR 175.105	A, H, 1 or 2
High-temperature oil	1.00	150	0.00096	High temperatures	G, 3 or 4
Inert oil	1.87	27	0.000876	For ultrapure gas and oxygen applications	F or N
Vegetable oil	0.94	9.5	0.00101	suitable for foods FDA 21 CFR 172.856	D, 5 or 6
Low-temperature oil	0.92	4.4	0.00108	Low temperatures	7 or 8

1) The thermal change in the diaphragm seal and other important technical features can be found in the "Applicator Sizing Diaphragm Seal" selection tool.
2) Only select FDA-approved filling oils for diaphragm seal devices with 3-A and EHEDG certification!
3) Product Configurator, “Fill fluid” ordering feature

Information on cleaning

Endress+Hauser provides flushing rings as an accessory to enable cleaning of the process isolating diaphragm without removing the transmitter from the process.

For further information please contact your local Endress+Hauser Sales Center.

We recommend you perform CIP (cleaning in place (hot water)) before SIP (sterilization in place (steam)) for pipe diaphragm seals. A frequent use of sterilization in place (SIP) will increase the stress on the process isolating diaphragm. Under unfavorable circumstances in the long term view we cannot exclude that a frequent temperature change could lead to a material fatigue of the process isolating diaphragm and possibly to a leakage.

Installation instructions

Diaphragm seal systems

- The diaphragm seal together with the transmitter form a closed, calibrated system, which is filled through ports in the diaphragm seal and in the measuring system of the transmitter. These ports are sealed and must not be opened.
- For devices with a temperature isolator or capillary, a suitable fastening device (mounting bracket) is recommended.
- When mounting, sufficient strain relief must be provided for the capillary line to prevent the capillary from bending (capillary bending radius ≥ 100 mm (3.94 in)
- For more detailed installation instructions, Endress+Hauser provides its customers with the free "Applicator Sizing Diaphragm Seal" selection tool, which is available online at "www.endress.com/applicator" or as a download.

Capillary

In order to obtain more precise measurement results and to avoid a defect in the device, mount the capillaries as follows:
- vibration-free (in order to avoid additional pressure fluctuations)
- not in the vicinity of heating or cooling lines
- insulate if the ambient temperature is below or above the reference temperature
- with a bending radius ≥ 100 mm (3.94 in)
- When using diaphragm seal systems with a capillary, sufficient strain relief must be provided to prevent the capillary from bending (capillary bending radius ≥ 100 mm (3.94 in)).
- In the case of devices with diaphragm seals and capillaries, the zero point shift caused by the hydrostatic pressure of the filling liquid column in the capillaries must be taken into account when selecting the measuring cell. If a measuring cell with a small measuring range is selected, a position adjustment can cause range violation.

Heat insulation

The PMP75 must only be insulated up to a certain height. The maximum permitted insulation height is indicated on the devices and applies to an insulation material with a heat conductivity ≤ 0.04 W/(m x K) and to the maximum permitted ambient and process temperature. The data were determined under the most critical application "quiescent air". Maximum permitted insulation height, here indicated on a PMP75 with a flange:

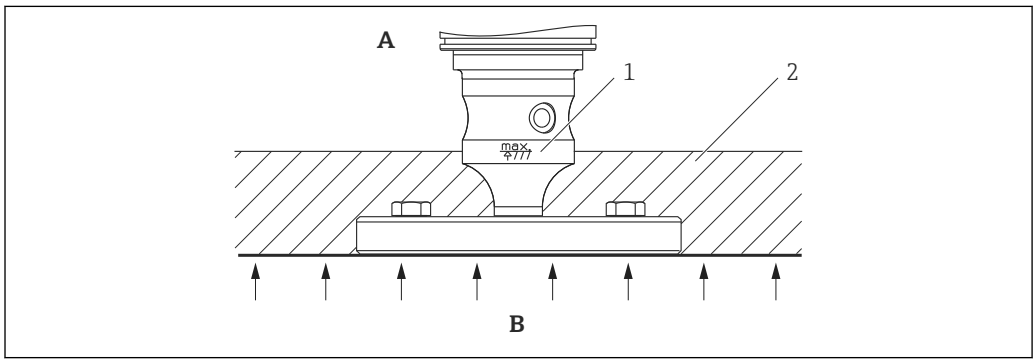

A0020474

A Ambient temperature ≤ 80 °C (176 °F)
B Process temperature 400 °C (752 °F), depends on the diaphragm seal filling oil used
1 Maximum insulation height
2 Insulation material

Mounting with temperature isolator

Endress+Hauser recommends the use of temperature isolators in the event of constant extreme fluid temperatures which cause the maximum permitted electronics temperature of +85 °C (+185 °F) to be exceeded. Diaphragm seal systems with temperature isolators can be used at temperatures up to a maximum of +400 °C (+752 °F) depending on the filling oil used → 115, see the "Diaphragm seal filling oils" section. To minimize the influence of rising heat, Endress+Hauser recommends the device be mounted horizontally or with the housing pointing downwards. The additional installation height also brings about a zero point shift of maximum 21 mbar (0.315 psi)due to the hydrostatic column in the temperature isolator. You can correct this zero point shift at the device.

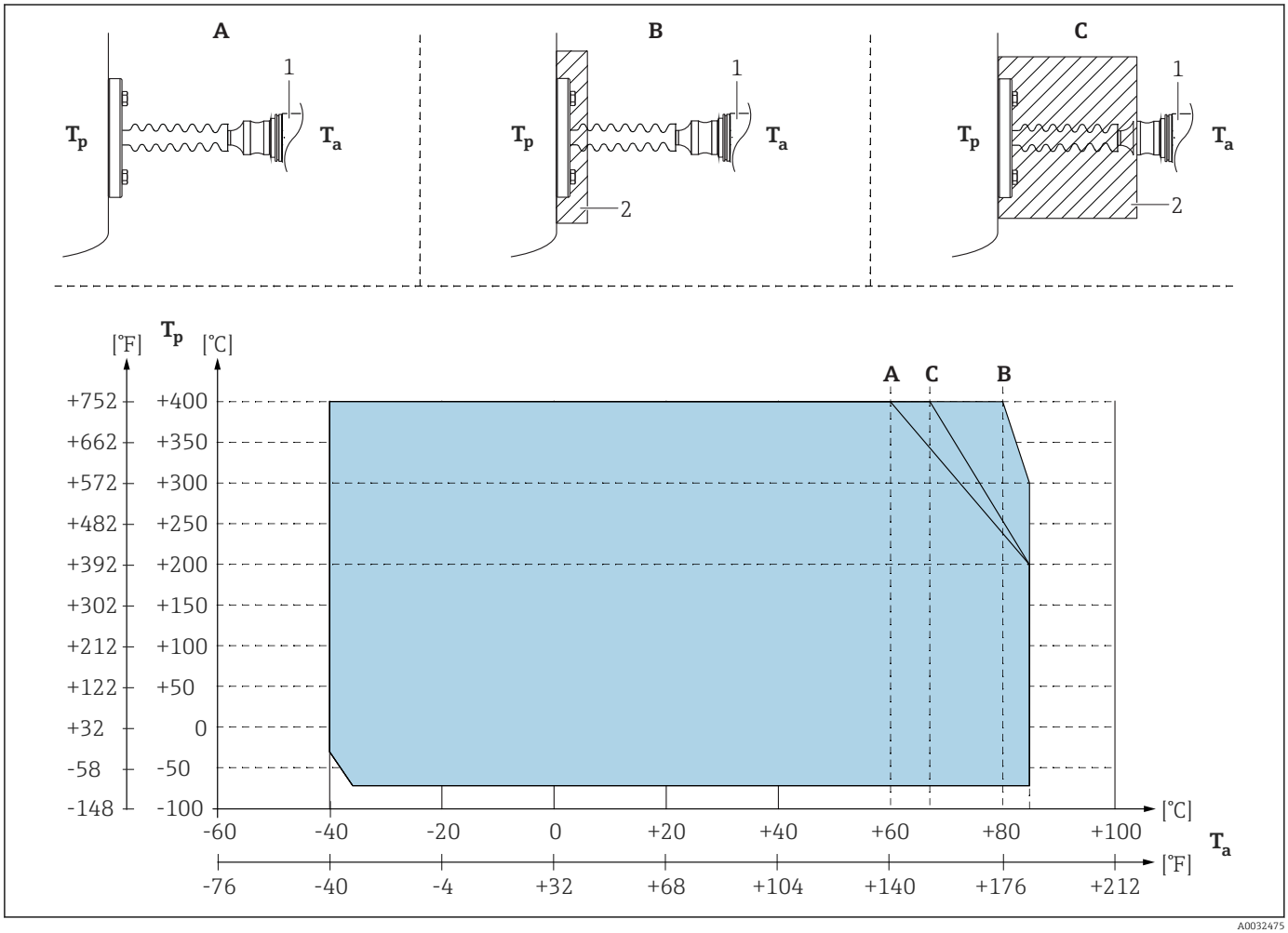

1 Transmitter
2 Insulation material

Position	Insulation	Ambient temperature(T_a) at transmitter	Maximum process temperature (T_p)
A	No insulation	60 °C (140 °F)	400 °C (752 °F) [1]
		85 °C (185 °F)	200 °C (392 °F)
B	30 mm (1.18 in) Insulation	80 °C (176 °F)	400 °C (752 °F) [1]
		85 °C (185 °F)	300 °C (572 °F)
C	Maximum insulation	67 °C (153 °F)	400 °C (752 °F) [1]
		85 °C (185 °F)	200 °C (392 °F)

1) Process temperature: max.400 °C (752 °F), depending on the diaphragm seal filling oil used

Vacuum applications

Installation instructions

For vacuum applications, pressure transmitters with a ceramic measuring membrane (oil-free) are preferable.

For applications under vacuum, Endress+Hauser recommends mounting the pressure transmitter below the diaphragm seal. This prevents vacuum loading of the diaphragm seal caused by the presence of fill fluid in the capillary.

When the pressure transmitter is mounted above the diaphragm seal, the maximum height difference H1 in accordance with the illustration below must not be exceeded. The following graphic depicts mounting above the lower diaphragm seal:

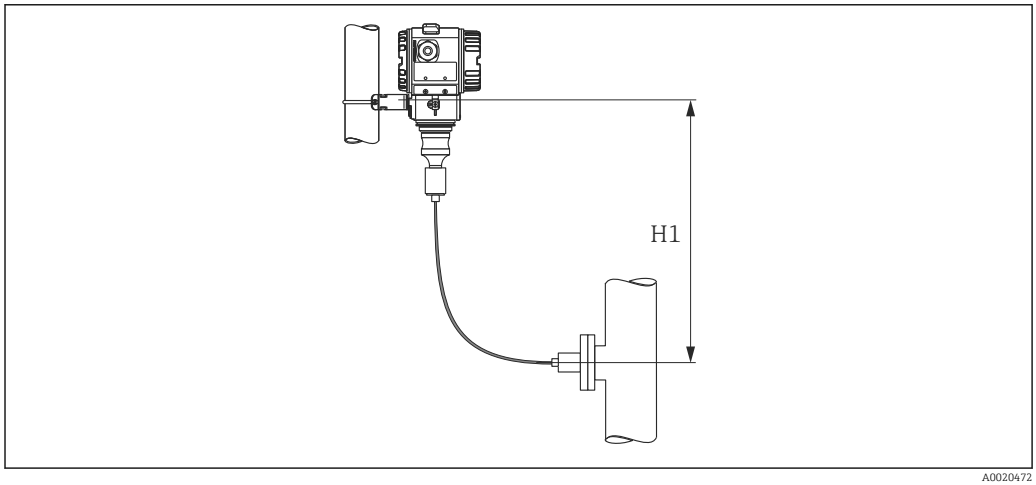

The maximum height difference depends on the density of the filling oil and the smallest ever pressure that is permitted to occur at the diaphragm seal (empty container), see the following diagram. The following diagram depicts the maximum installation height above the diaphragm seal for vacuum applications.

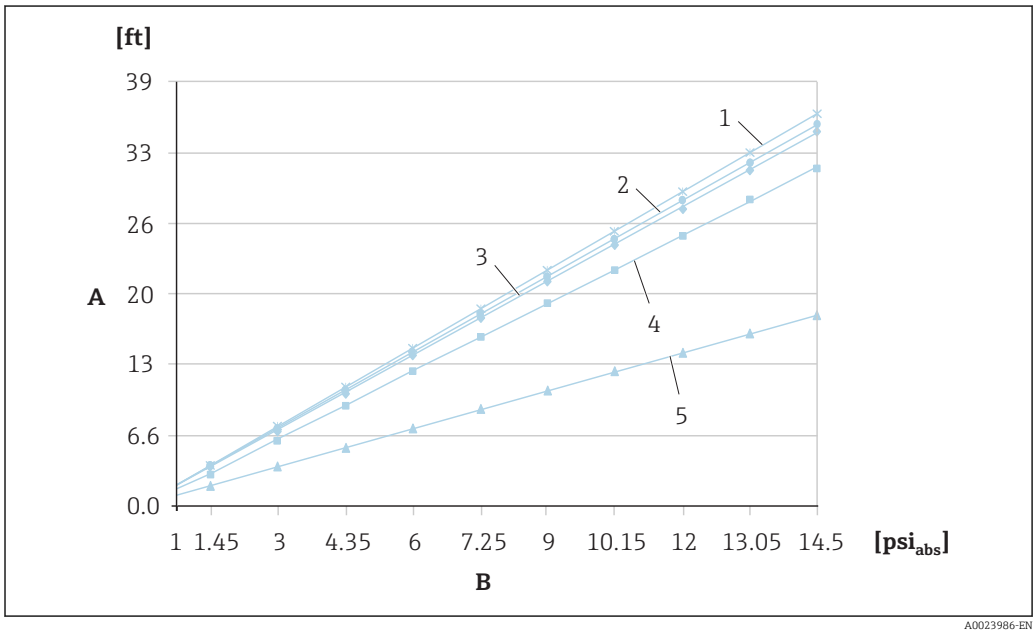

A Height difference H1
B Pressure at diaphragm seal
1 Low-temperature oil
2 Vegetable oil
3 Silicone oil
4 High-temperature oil
5 Inert oil

Certificates and approvals

CE mark

The device meets the legal requirements of the relevant EC directives. Endress+Hauser confirms that the device has been successfully tested by applying the CE mark.

RoHS

The measuring system complies with European Directive 2002/96/EC.

RCM-Tick marking

The supplied product or measuring system meets the ACMA (Australian Communications and Media Authority) requirements for network integrity, interoperability, performance characteristics as well as health and safety regulations. Here, especially the regulatory arrangements for electromagnetic compatibility are met. The products are labelled with the RCM- Tick marking on the name plate.



A0029561

Ex approvals

- ATEX
- FM
- CSA
- NEPSI
- IECEx
- TIIS
- Also combinations of different approvals

All explosion protection data are given in separate documentation which is available upon request. The Ex documentation is supplied as standard with all Ex devices→ 127.

EAC conformity

The measuring system meets the legal requirements of the applicable EAC guidelines. These are listed in the corresponding EAC Declaration of Conformity together with the standards applied.

Endress+Hauser confirms successful testing of the device by affixing to it the EAC mark.

Suitable for hygiene applications

The device is available with hygienic process connections (overview: see order code). The materials of the hygienic process connections in contact with foodstuffs comply with framework Regulation (EC) 1935/2004.

⚠ CAUTION

Contamination in the process!

Risk of contamination if incorrect seals and parts are used!

- ▶ To avoid the risk of contamination, when installing the device comply with the design principles of EHEDG, Guideline 37 "Hygienic Design and Application of Sensors" and Guideline 16 "Hygienic Pipe Couplings".
- ▶ Suitable assemblies and seals must be used to ensure hygienic design in accordance with 3-A SSI and EHEDG specifications.
- ▶ The leak-proof connections can be cleaned with the cleaning methods typical of this industry (CIP and SIP). Attention must be paid to the pressure and temperature specifications of the sensor and process connections for CIP and SIP processes (clean in place/sterilize in place).
- ▶ For diaphragm seal devices with 3-A and EHEDG certificates, only select filling oils with FDA approval!

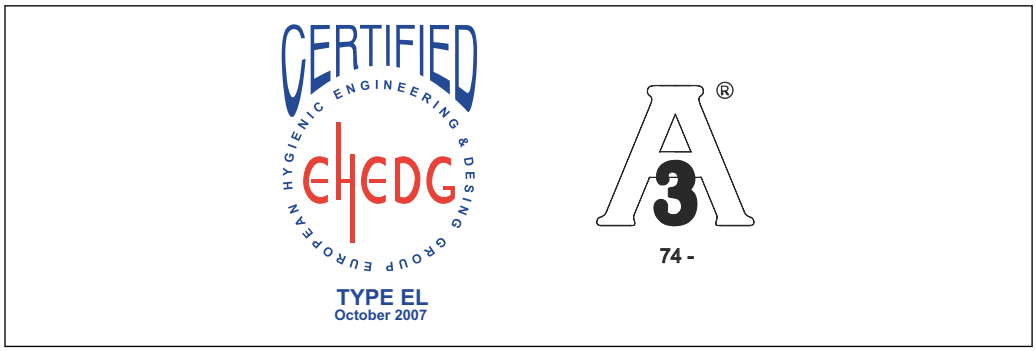

A0026782

The gap-free connections can be cleaned of all residue using the usual cleaning methods within this industry.

Functional safety SIL/ IEC 61508 Declaration of Conformity (optional)

The Cerabar S with 4 to 20 mA output signal has been developed in accordance with the IEC 61508 standard. These devices can be used to monitor the process level and pressure up to SIL 3. For a detailed description of safety functions with the Cerabar S, settings and functional safety data, see the "Functional safety manual - Cerabar S" SD00190P/00.

For devices up to SIL 3 / IEC 61508 Declarations of Conformity see:

Ordering information:

Product Configurator, order code for "Additional options 1" and "Additional options 2", version "E".

Overfill protection

WHG (see document ZE00260P/00/EN)

Ordering information:

Product Configurator, order code for "Approval", option "6".

CRN approval

Some device versions have CRN approval. A CRN-approved process connection with a CSA approval must be ordered for a CRN-approved device. These devices are fitted with a separate nameplate with the registration number CRN 0F10525.5C .

PMP75 devices with a capillary are not CRN-approved.

Ordering information:

Product Configurator, order code for "Process connection; material" and

Product Configurator, order code for "Approval" (only in conjunction with an approved process connection)

Other standards and guidelines

The applicable European guidelines and standards can be found in the relevant EU Declarations of Conformity. The following were also applied:

DIN EN 60770 (IEC 60770):

Transmitters for use in industrial-process control systems. Part 1: Methods for operating performance evaluation

DIN 16086:

Electrical pressure measuring instruments, pressure sensors, pressure transmitters, pressure measuring instruments, concepts, specifications on data sheets

EN 61326-X:

EMC product family standard for electrical equipment for measurement, control and laboratory use.

EN 60529:

Degrees of protection provided by enclosures (IP code)

WELMEC guide 8.8:

General and Administrative Aspects of the Voluntary System of Modular Evaluation of Measuring instruments under the MID.

OIML R117-1 Edition 2007 (E):

Dynamic measuring systems for liquids other than water.

EN 12405-1/A1 Edition 2006:

Gas meters – Conversion devices – Part 1: Volume conversion

Pressure Equipment Directive 2014/68/EU (PED)

Pressure equipment with allowable pressure ≤ 200 bar (2 900 psi)

Pressure equipment (having a maximum allowable pressure PS ≤ 200 bar (2 900 psi)) can be classified as pressurized equipment in accordance with Pressure Equipment Directive 2014/68/EU. If the maximum allowable pressure is ≤ 200 bar (2 900 psi) and the pressurized volume of the pressure equipment is ≤ 0.1 l, the pressure equipment is subject to the Pressure Equipment Directive (cf. Pressure Equipment Directive 2014/68/EU, Article 4, point 3). The Pressure Equipment Directive only requires that the pressure equipment shall be designed and manufactured in accordance with the "sound engineering practice of a Member State".

Reasons:

- Pressure Equipment Directive (PED) 2014/68/EU Article 4, point 3
- Pressure equipment directive 2014/68/EU, Commission's Working Group "Pressure", Guideline A-05 + A-06

Note:

A partial examination shall be performed for pressure instruments that are part of safety equipment for the protection of a pipe or vessel from exceeding allowable limits (equipment with safety function in accordance with Pressure Equipment Directive 2014/68/EU, Article 2, point 4).

Pressure equipment with allowable pressure > 200 bar (2 900 psi)

Pressure equipment designated for application in every process fluid having a pressurized volume of <0.1 l and a max. allowable pressure PS > 200 bar (2 900 psi) shall satisfy the essential safety requirements set out in Annex I of the Pressure Equipment Directive 2014/68/EU. According to Article 13 pressure equipment shall be classified by category in accordance with Annex II. The conformity assessment of the pressure equipment shall be determined by the category I under consideration of the above-mentioned low pressurized volume. These devices shall be provided with CE marking.

Reasons:

- Pressure Equipment Directive 2014/68/EU, Article 13, Annex II
- Pressure equipment directive 2014/68/EU, Commission's Working Group "Pressure", Guideline A-05

Note:

A partial examination shall be performed for pressure instruments that are part of safety equipment for the protection of a pipe or vessel from exceeding allowable limits (equipment with safety function in accordance with Pressure Equipment Directive 2014/68/EU, Article 2, point 4).

The following also applies:

- PMP71 with threaded connection and internal process isolating diaphragm PN > 200 as well as oval flange adapter PN > 200:
  Suitable for stable gases in group 1, category I, module A
- PMP75 with pipe diaphragm seal ≥ 1.5"/PN40:
  Suitable for stable gases in group 1, category II, module A2
- PMP75 with barriers PN > 200 ≥ 1.5"/PN40:
  Suitable for stable gases in group 1, category I, module A
- PMP75 with threaded connection PN > 200:
  Suitable for stable gases in group 1, category I, module A

Manufacturer declarations

Depending on the desired configuration, the following documents can be ordered additionally with the device:
- FDA conformity
- TSE-free: materials free from animal origin
- Regulation (EC) No. 2023/2006 (GMP)
- Regulation (EC) No. 1935/2004 on materials and articles intended to come into contact with food

Downloading the Declaration of Conformity

http://www.endress.com/en/download



1. Select "Approvals & Certificates"
2. Select "Manufact. Declaration"
3. Enter the required product code
4. Click "Search"

The available downloads are displayed.

Marine approval

- GL (German Lloyd)
- ABS

Ordering information:

Product Configurator, order code for "Additional options 1" or "Additional options 2", version "S".

Drinking water approval

PMC71/PMP71: NSF 61 approval

PMC71/PMP71: UBA/W270 approval (ordering information as for NSF approval: Product Configurator, order code for "Additional options 1" or "Additional options 2" option "F".)

Ordering information:

Product Configurator, order code for "Additional options 1" or Additional options 2", version "F".

Approvals for custody transfer

All aspects of OIML R117-1 Edition 2007 (E) and EN 12405-1/A1 Edition 2006 are fulfilled.

MID Parts Certificate

TC7975

Classification of process sealing between electrical systems and (flammable or combustible) process fluids in accordance with ANSI/ISA 12.27.01

Endress+Hauser devices are designed in accordance with ANSI/ISA 12.27.01. allowing the user to waive the use and save the cost of installing external secondary process seals in the conduit as required by the process sealing sections of ANSI/NFPA 70 (NEC) and CSA 22.1 (CEC). These instruments comply with the North American installation practice and provide a very safe and cost-

saving installation for pressurized applications with hazardous fluids. Please refer to the following table for the seal class assigned (single seal or dual seal):

Device	Approval	Remark	Single seal MWP	Dual seal MWP
PMC71	CSA C/US IS, XP	except separate housing	-	60 bar (900 psi)
	CSA C/US IS	With separate housing	40 bar (600 psi)	-
PMP71	CSA C/US XP, XP+IS	except separate housing	400 bar (6 000 psi)	-
	CSA C/US IS	except separate housing	>200 to 400 bar (3 000 to 6 000 psi)	≤200 bar (3 000 psi)
	CSA C/US IS	With separate housing	400 bar (6 000 psi)	-
PMP75	XP, XP+IS	except separate housing	400 bar (6 000 psi)	-
	CSA C/US IS	except separate housing	>200 to 400 bar (3 000 to 6 000 psi)	≤200 bar (3 000 psi)
	CSA C/US IS	With separate housing	400 bar (6 000 psi)	-

Further information can be found in the control drawings of the relevant devices.

Inspection certificate

Designation	PMC71	PMP71	PMP75	Option
3.1 Material documentation, wetted metal parts, EN10204-3.1 inspection certificate	✔	✔	✔	B [1) 3)]
Declaration of Conformity NACE MR0175, wetted metal parts	—	✔	✔	C [1) 3)]
EN10204-3.1 material, NACE MR0175, wetted metal parts, inspection certificate	—	✔	✔	D [1) 3)]
Individual test, test report	✔	✔	✔	3 [1)]
Pressure test, internal procedure, test report	✔	✔	✔	4 [1)]
Helium leak test, internal procedure, test report	✔	✔	—	5 [1)]
EN10204-3.1 material wetted parts +Ra, Ra= surface roughness, dimensional check, inspection certificate	✔	—	—	6 [1)]
Delta-Ferrit measurement, internal procedure, wetted metallic parts, inspection certificate	✔	—	—	8 [1)]
3.1 Material documentation, wetted metal parts, EN10204-3.1 inspection certificate	✔	✔	✔	JA [2) 3)]
Declaration of Conformity NACE MR0175, wetted metal parts	✔	✔	✔	JB [2) 3)]
Declaration of Conformity NACE MR0103, wetted metal parts	✔	✔	✔	JE [2) 3)]
Surface finish measurement ISO4287/Ra, wetted metal parts, inspection certificate	✔	—	✔	KB [2)]
Helium leak test, internal procedure, inspection certificate	✔	✔	✔	KD [2)]
Pressure test, internal procedure, inspection certificate	✔	✔	✔	KE [2)]
Delta-Ferrit measurement, internal procedure, wetted metallic parts, inspection certificate	✔	—	✔	KF [2)]
PMI test (XRF), internal procedure, metal parts in contact with the medium	✔	✔	✔	KG [2)]
Welding documentation, wetted/pressurized seams	—	✔	—	KS [2)]

1) Product Configurator, order code for "Additional options 1" and "Additional options 2"
2) Product Configurator, order code for "Test, Certificate"
3) The choice of this feature for coated process isolating diaphragms/process connections refers to the metal base material.

Calibration

Designation	PMC71	PMP71	PMP75	Option [1)]
Sensor range; mbar/bar	✔	✔	✔	1
Sensor range; kPa/MPa	✔	✔	✔	2
Sensor range; mmH2O/mH2O	✔	✔	✔	3
Sensor range; inH2O/ftH2O	✔	✔	✔	4

Designation	PMC71	PMP71	PMP75	Option [1]
Sensor range; psi	✔	✔	✔	6
Factory calibration certificate, 5-point; see additional specification	✔	✔	✔	C
DKD/DAkkS certificate; see additional specification	✔	✔	✔	D
Customized pressure; see additional specification	✔	✔	✔	E
Customized level; see additional specification	✔	✔	✔	F
Customized pressure + 5-point factory calibration certificate; see additional specification	✔	✔	✔	H
Customized level + 5-point factory calibration certificate; see additional specification	✔	✔	✔	I
Platinum; see additional specification	✔	✔	—	K
Platinum + factory calibration certificate 5-point; see additional specification	✔	✔	—	L
Platinum + DKD/DAkkS certificate; see additional specification	✔	✔	—	M

1) Product Configurator, order code for "Calibration; unit"

Service

Designation	Option [1] (not for 1-5V DC)
Cleaned of oil+grease [2]	HA
Cleaned for oxygen service [2]	HB
Cleaned of PWIS (paint-wetting impairment substances) [2]	HC

1) Product Configurator, order code for "Service"
2) Device only, not accessories or enclosed accessories.

Ordering information

Detailed ordering information is available from the following sources:
- In the Product Configurator on the Endress+Hauser website: www.endress.com -> Click "Corporate" -> Select your country -> Click "Products" -> Select the product using the filters and search field -> Open product page -> The "Configure" button to the right of the product image opens the Product Configurator.
- From your Endress+Hauser Sales Center: www.addresses.endress.com

Product Configurator - the tool for individual product configuration
- Up-to-the-minute configuration data
- Depending on the device: Direct input of measuring point-specific information such as measuring range or operating language
- Automatic verification of exclusion criteria
- Automatic creation of the order code and its breakdown in PDF or Excel output format
- Ability to order directly from the Endress+Hauser Online Shop

Scope of delivery

- Measuring device
- Optional accessories
- Brief Operating Instructions
- Certificates of calibration
- Optional certificates

Measuring point (TAG)

Ordering feature	895: Marking
Option	Z1: Tagging (TAG), see additional spec.
Position of the measuring point marking	To be selected in the additional specifications: ▪ Tag plate Stainless Steel ▪ Self-adhesive paper label ▪ Supplied label/plate ▪ RFID TAG ▪ RFID TAG + Tag plate Stainless Steel ▪ RFID TAG + Self-adhesive paper label ▪ RFID TAG + Supplied label/plate
Definition of the measuring point designation	To be defined in the additional specifications: 3 lines containing up to 18 characters each The measuring point designation appears on the selected label and/or the RFID TAG.
Identification on electronic nameplate (ENP)	32 characters

Configuration data sheet

Pressure

The following configuration data sheet must be completed and included with the order if the option "E" or "H" has been selected in the Product Configurator, order code for "Calibration; Unit".

Pressure unit

❑ mbar	❑ mmH_2O [1]	❑ mmHg [2]	❑ Pascal	❑ torr
❑ bar	❑ mH_2O [1]	❑ inHg [2]	❑ hPa	❑ g/cm^2
❑ psi	❑ ftH_2O [1]	❑ gf/cm^2	❑ kPa	❑ kg/cm^2
	❑ inH_2O [1]	❑ kgf/cm^2	❑ MPa	❑ lb/ft^2
				❑ atm

1) The conversion factor for the pressure unit is based on a reference temperature of 4 °C (39.2 °F).
2) The conversion factor of the pressure unit refers to a reference temperature of 0 °C (32 °F).

Calibration range / Output

Lower range value (LRV): _____ [pressure unit]
Upper range value (URV): _____ [pressure unit]

Display

Display of the content of the main line (option depends on sensor and communication variant)

- ❑ Primary value [PV] (default)
- ❑ Primary value [%]
- ❑ Pressure
- ❑ Current [mA] (HART only)
- ❑ Temperature
- ❑ Error number
- ❑ Alternating display

Damping

Damping: _____ sec (Default 2 sec)

Smallest span (factory calibration) → 13

Level

The following configuration data sheet must be completed and included with the order if the option "F" or "T" has been selected in the Product Configurator, order code for "Calibration; Unit".

Pressure unit

- ❑ mbar
- ❑ bar
- ❑ psi
- ❑ mmH_2O [1)]
- ❑ mH_2O [1)]
- ❑ ftH_2O [1)]
- ❑ inH_2O [1)]
- ❑ mmHg [2)]
- ❑ inHg [2)]
- ❑ gf/cm^2
- ❑ kgf/cm^2
- ❑ Pascal
- ❑ hPa
- ❑ kPa
- ❑ MPa
- ❑ torr
- ❑ g/cm^2
- ❑ kg/cm^2
- ❑ lb/ft^2
- ❑ atm

Output unit (scaled unit)

Mass	Lengths	Volume	Volume	Percent
❑ kg	❑ m	❑ l	❑ USgal	❑ %
❑ t	❑ dm	❑ hl	❑ impgal	
❑ lb	❑ cm	❑ m^3	❑ USbblPE TR	
	❑ mm	❑ ft^3		
	❑ ft			
	❑ inch			

Empty calibration [a]:
Low pressure value (empty) _____ [pressure unit]

Full calibration [b]:
High pressure value (full) _____ [pressure unit]

Empty calibration [a]:
Low measured value (empty) _____ [Scaled unit]

Full calibration [b]:
High level value (full) _____ [Scaled unit]

Example

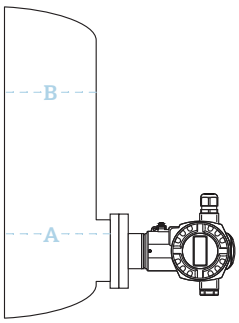

A0020477

A 0 mbar/0 m
B 300 mbar (4.5 psi) / 3 m (9.8 ft)

1) The conversion factor for the pressure unit is based on a reference temperature of 4 °C (39.2 °F).
2) The conversion factor of the pressure unit refers to a reference temperature of 0 °C (32 °F).

Display

Display of the content of the main line (option depends on sensor and communication variant)

- ❑ Primary value [PV] (default)
- ❑ Primary value [%]
- ❑ Pressure
- ❑ Current [mA] (HART only)
- ❑ Temperature
- ❑ Level before lin.
- ❑ Tank content
- ❑ Error number
- ❑ Alternating display

Damping

Damping: _____ sec (Default 2 sec)

Accessories

HistoROM®/M-DAT	The HistoROM®/M-DAT is a memory module that can be attached to any electronic insert (not for 1-5V DC). Ordering information: Product Configurator, order code for "Additional options 1" or Additional options 2", version "N" or as a separate accessory (part no.: 52027785).
Welding flanges and welding neck	For details, refer to TI00426F/00/EN "Weld-in adapters, process adapters and flanges".
Manifolds	See → 77. For further details, see SD01553P/00/EN "Mechanical accessories for pressure measuring devices".
Additional mechanical accessories	Oval flange adapters, pressure gauge valves, shutoff valves, siphons, condensate pots, cable shortening kits, adapter test, flushing rings, block&bleed valves, protective roofs. For details see SD01553P/00/EN "Mechanical accessories for pressure measuring devices".

Supplementary documentation

Field of Activities

Pressure measurement, powerful instruments for process pressure, differential pressure, level and flow:

FA00004P/00/EN

Technical Information

- Deltabar S: TI00382P/00/EN
- Deltapilot S: TI00416P/00/EN
- EMC test procedures: TI00241F/00/EN
- Weld-in adapters, process adapters and flanges: TI00426F/00/EN

Special Documentation

Mechanical accessories for pressure measuring devices: SD01553P/00/EN

Operating Instructions

4 to 20 mA HART:
- Cerabar S: BA00271P/00/EN
- Description of device functions Cerabar S/Deltabar S/Deltapilot S: BA00274P/00/EN

4 to 20 mA HART with MID parts certificate:
- BA00412P/00/EN
- Description of Device Functions: BA00413P/00/EN

1-5V DC:
Cerabar S PMP71: BA01633P/00/EN

PROFIBUS PA:
- Cerabar S: BA00295P/00/EN
- Description of device functions Cerabar S/Deltabar S/Deltapilot S: BA00296P/00/EN

FOUNDATION Fieldbus:
- Cerabar S: BA00302P/00/EN
- Description of device functions Cerabar S/Deltabar S/Deltapilot S: BA00303P/00/EN

Brief Operating Instructions

- 4 to 20 mA HART, Cerabar S: KA01019P/00/EN
- 1-5V DC, Cerabar S PMP71: KA01258P/00/EN
- PROFIBUS PA, Cerabar S: KA01022P/00/EN
- FOUNDATION Fieldbus, Cerabar S: KA01025P/00/EN

Functional safety manual (SIL)

Cerabar S (4 to 20 mA): SD00190P/00/EN

Overfill protection

WHG: ZE00260P/00/DE

Safety Instructions (XA)

Depending on the approval, the following Safety Instructions (XA) are supplied with the device. They are an integral part of the Operating Instructions.

HART, PROFIBUS PA, FOUNDATION Fieldbus

Directive	Device	Electronics	Documentation	Option [1]
ATEX II 1/2 G Ex ia IIC T6 Ga/Gb	PMC71, PMP71, PMP75	4 to 20 mA HART, PROFIBUS PA, FOUNDATION Fieldbus	XA00244P	1
ATEX II 1/2 D Ex ta/tb IIIC Da/Db	PMP71, PMP75	4 to 20 mA HART, PROFIBUS PA, FOUNDATION Fieldbus	▪ XA00246P ▪ XA00289P	2
ATEX II 1/2D Ex ia IIIC Da/Db	PMC71	4 to 20 mA HART, PROFIBUS PA, FOUNDATION Fieldbus	▪ XA00247P ▪ XA00290P	2
ATEX II 1/3D Ex ta/tc IIIC Da/Dc	PMP71, PMP75	4 to 20 mA HART, PROFIBUS PA, FOUNDATION Fieldbus	▪ XA00248P ▪ XA00291P	4
ATEX II 2G Ex d IIC T6 Gb	PMP71, PMP75	4 to 20 mA HART, PROFIBUS PA, FOUNDATION Fieldbus	XA00249P	5
ATEX II 2G Ex d ia IIC T6 Gb	PMC71	4 to 20 mA HART, PROFIBUS PA, FOUNDATION Fieldbus	XA00250P	5
ATEX II 1/2G Ex ia IIC T6, WHG (German Water Resources Act)	PMC71, PMP71, PMP75	4 to 20 mA HART, PROFIBUS PA, FOUNDATION Fieldbus	XA00244P	6

Directive	Device	Electronics	Documentation	Option [1]
ATEX II 3 G Ex nA II T6	PMC71, PMP71, PMP75	4 to 20 mA HART, PROFIBUS PA, FOUNDATION Fieldbus	XA00251P	7
ATEX II 1/2G Ex ia IIC T6 Ga/Gb + ATEX II 1/2D Ex ia IIIC Da/Db	PMC71, PMP71, PMP75	4 to 20 mA HART, PROFIBUS PA, FOUNDATION Fieldbus	XA00253P	3
ATEX II 1G Ex ia IIC Ga + II 1D Ex ia IIIC Da	PMC71, PMP71, PMP75	4 to 20 mA HART, PROFIBUS PA, FOUNDATION Fieldbus	XA00276P	8
ATEX II 1/2G Ex ia IIC T6 + II 2G Ex d IIC T6	PMP71, PMP75	4 to 20 mA HART, PROFIBUS PA, FOUNDATION Fieldbus	XA00252P	B
ATEX II Ex ia + FM IS + CSA IS ATEX II 1/2G Ex ia IIC T6 + FM/CSA IS Cl.I,II,III Div.1 Gr.A-G, FM/CSA: Zone 0,1,2	PMC71	▪ 4 to 20 mA HART, PROFIBUS PA, FOUNDATION Fieldbus ▪ HART ▪ PROFIBUS PA, FOUNDATION Fieldbus	▪ XA00244P ▪ XA00593P + XA01059P ▪ XA00596P + XA01060P	E
ATEX II Ex ia / Ex d + FM/CSA IS + XP ATEX II 1/2G Ex ia IIC T6+ ATEX II 2G Ex d IIC T6+ FM/CSA IS + XP Cl.I.II Div.1 Gr.A-G/B-G FM: Zone 1.2/CSA: Zone 1,2	PMP71, PMP75	▪ 4 to 20 mA HART, PROFIBUS PA, FOUNDATION Fieldbus ▪ HART ▪ PROFIBUS PA, FOUNDATION Fieldbus	▪ XA00252P ▪ XA00592P + XA01197P ▪ XA00590P + XA01198P	F

1) Product Configurator, order code for "Approval"

Directive	Device	Electronics	Documentation	Option [1]
IECEx Ex ia IIC T6 Ga/Gb	PMC71, PMP71, PMP75	4 to 20 mA HART	XB00005P	I
IEC Ex d ia IIC T6 Gb	PMC71	4 to 20 mA HART, PROFIBUS PA, FOUNDATION Fieldbus	XA00511P	B
IEC Ex d IIC T6 Gb	PMP71, PMP75	4 to 20 mA HART, PROFIBUS PA, FOUNDATION Fieldbus	XA00510P	M

1) Product Configurator, order code for "Approval"

1-5V DC

Directive	Device	Electronics	Documentation	Option [1]
CSA C/US XP Cl.I Div.1 Gr.B-D, Ex d, Zone 1,2	PMP71	1-5V DC	XA00599P	V

1) Product Configurator, order code for "Approval"

Directive	Device	Electronics	Documentation	Option [1]
NEPSI Ex ia IIC T6	PMC71, PMP71, PMP75	4 to 20 mA HART, PROFIBUS PA, FOUNDATION Fieldbus	XA00549P	H
NEPSI Ex d IIC T6	PMP71, PMP75	4 to 20 mA HART, PROFIBUS PA, FOUNDATION Fieldbus	XA00551P	G
NEPSI Ex d ia IIC T6	PMC71	4 to 20 mA HART, PROFIBUS PA, FOUNDATION Fieldbus	XA00551P	G

1) Product Configurator, order code for "Approval"

Directive	Device	Electronics	Documentation	Option [1]
TIIS Ex d [ia] IIC T6	PMC71	4 to 20 mA HART	TC17436	L
TIIS Ex d [ia] IIC T4	PMC71	4 to 20 mA HART	TC17398, TC17399	M
TIIS Ex d IIC T6	PMP71 (700 bar version)	4 to 20 mA HART	TC17445	L
TIIS Ex d IIC T6	PMP71, PMP75	4 to 20 mA HART	TC17446	L

1) Product Configurator, order code for "Approval"

Directive	Device	Electronics	Documentation	Option [1]
INMETRO Ex ia IIC T6 Ga/Gb	PMC71, PMP71, PMP75	4 to 20 mA HART, PROFIBUS PA, FOUNDATION Fieldbus	XA01315P	J
INMETRO Ex d IIC T6 Gb	PMP71, PMP75	4 to 20 mA HART, PROFIBUS PA, FOUNDATION Fieldbus	XA01279P	O
INMETRO Ex ta IIIC Da/Db	PMP71, PMP75	4 to 20 mA HART, PROFIBUS PA, FOUNDATION Fieldbus	XA01313P	Z
INMETRO Ex d ia IIC T6 Gb	PMC71	4 to 20 mA HART, PROFIBUS PA, FOUNDATION Fieldbus	XA01280P	P
INMETRO Ex ia IIIC Da/Db	PMC71	4 to 20 mA HART, PROFIBUS PA, FOUNDATION Fieldbus	XA01314P	Z

1) Product Configurator, order code for "Approval"

Installation/Control Drawings

Directive	Device	Electronics	Documentation	Option [1]
FM IS Class I, II, III, Division 1, Groups A – G; NI, Class I Division 2, Groups A – D; AEx ia	PMC71, PMP71, PMP75	▪ 4 to 20 mA HART ▪ PROFIBUS PA, FOUNDATION Fieldbus	▪ XA01059P ▪ XA01060P	S
CSA IS Class I, II, III, Division 1, Groups A – G; Class I Division 2, Groups A – G	PMC71, PMP71, PMP75	▪ 4 to 20 mA HART ▪ PROFIBUS PA, FOUNDATION Fieldbus	▪ XA00593P ▪ XA00596P	U
FM IS + XP Class I, Division 1, Groups A – D	PMP71, PMP75	▪ 4 to 20 mA HART ▪ PROFIBUS PA, FOUNDATION Fieldbus	▪ XA01197P ▪ XA01198P	C
CSA IS + XP Class I Division 1, Groups A – D	PMP71, PMP75	▪ 4 to 20 mA HART ▪ PROFIBUS PA, FOUNDATION Fieldbus	▪ XA00592P ▪ XA00590P	D
FM/CSA IS + XP Class I Division 1, Groups A – D	PMP71, PMP75	▪ 4 to 20 mA HART ▪ PROFIBUS PA, FOUNDATION Fieldbus	▪ XA00592P + XA01197P ▪ XA01198P + XA00590P	E
FM NI Cl.I Div.2 Groups A - D, Zone 2	PMC71, PMP71, PMP75	4 to 20 mA HART, PROFIBUS PA, FOUNDATION Fieldbus	XA01063P	R
FM XP Cl.I Div.1 Groups A - D, AEx d, Zone 1,2	PMC71, PMP71, PMP75	4 to 20 mA HART, PROFIBUS PA, FOUNDATION Fieldbus	XA01070P	T
FM DIP Cl.II,III Div.1 Gr.E-G, Zone 21,22	PMP71, PMP75	4 to 20 mA HART, PROFIBUS PA, FOUNDATION Fieldbus	FM3017778	Q
CSA C/US XP Cl.I Div.1 Gr.B-D, Ex d, Zone 1,2	PMC71, PMP71, PMP75	4 to 20 mA HART, PROFIBUS PA, FOUNDATION Fieldbus	ZD00230P + XA00599P	V
CSA C/US General Purpose	PMD75, FMD77, FMD78	4 to 20 mA HART, PROFIBUS PA, FOUNDATION Fieldbus	-	X

1) Product Configurator, order code for "Approval"



www.addresses.endress.com

Endress+Hauser

People for Process Automation

Flow
Pressure
Level
Temperature
measurement
monitoring
control

TORONTO OFFICE
6611 Innovator Drive
Mississauga, ON
L5T 2J3
Phone: (416) 482-8180
Fax: (416) 482-5545
www.kobold.com

MONTREAL OFFICE
9A Aviation Road
Pointe Claire, QC
H9R 4Z2
Phone: (514) 428-8090
Fax: (514) 428-8899
www.kobold.com

Tags:
23-LSL-301

Top Mount Magentic Float Switch for Liquids
Model NCK-2554

Versatile Design

KOBOLD level switch products are designed to meet a wide range of application requirements by addressing such design considerations as:

- Pressure and Temperature
- Mounting Orientation
- Termination
- Media Characteristics such as Density, Viscosity and Corrosivity
- Materials of Construction
- Switch Load

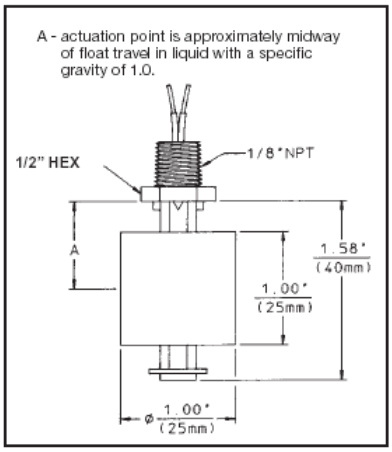

Specifications

Material:	Kynar® (PVDF)
Max. Pressure:	100 PSIG
Max. Temperature:	100° C
Fitting:	⅛" NPT
Leads:	22 AWGX24" (longer leads available)
Liquid Spedicic Gravity Minimum:	0.65
Electrical Data:	SPST 240 VAC 0.5A Resistive

Operation

All KOBOLD level switches use a hermetically sealed reed contact actuated by a magnet in the float. As the float rises and falls, the magnetic field causes the switch inside the stem to open or close.

KOBOLD level switches can be mounted in the tank top or bottom, or can be adapted for side mounting. Switches will operate normally with up to a 30 degree tilt from vertical.

All single point switches are field selectable for normally open (N/O) or normally closed (N/C) switch operation by simply removing the retaining ring and flipping the float.

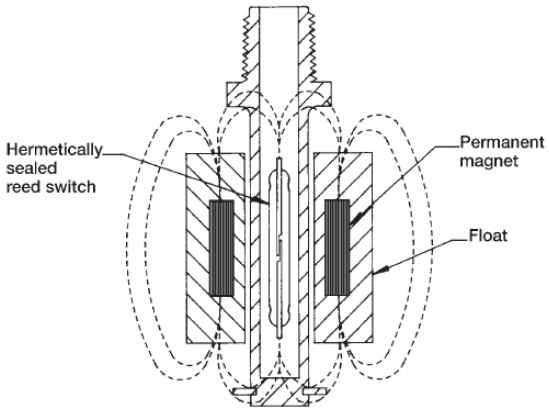

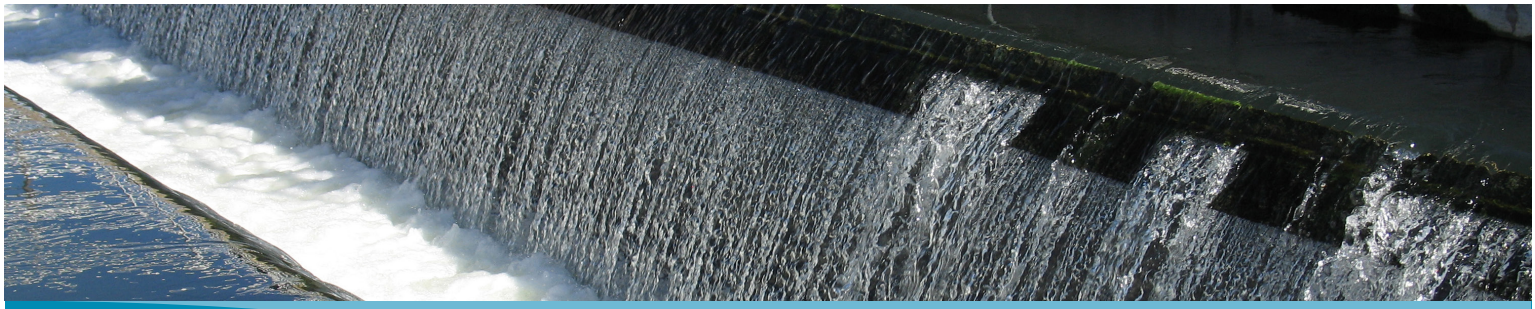

TAG:
16-LSHH-401-1/2/3
20-LSHH-201-1/2/3/4
20-LSLL-201-1/2/3/4

2.71

MJK Float Switch 7030

MERCURY FREE WITH BREAK RESISTANT CABLE

General

The exceptional reliability of the MJK Float Switch 7030 makes it very suitable for many highly automated systems to provide additional protection against control system failures, preventing pumps from running dry, etc.

MJK uses only up-to-date, environmentally friendly materials in the Float Switch 7030. The extra durability of the potted switching components - strong multi-fiber flexible cable and rugged polypropylene enclosure - allows the Float Switch 7030 to deliver reliable results where other float switches fail.

5 YEAR WARRANTY

Features

- Environmental friendly - no mercury
- Unmatched rugged construction for durability
- Riable electromechanical contact system - guaranteed for up to 20 million operations
- Unique counterweight system
- UL approved 250 VAC/16 A switch
- 39, 65, 100 or 150 ft. oil resistant PVC cable and polypropylene cable bracket
- SPDT relay allowing normally open or normally closed configurations - selected based on how it is wired.



Applications

- Waste water pumping stations
- Sewage treatment plants
- Drinking water reservoirs.

Functions

A hermetically sealed microswitch is activated by a moving counterweight when the float changes its position in the fluid. The changeover hysteresis can be adjusted by means of a counterweight placed on the cable. The counterweight also ensures that Float Switch 7030 is always correctly positioned and makes the bend of the cable less sharp.

mjk
a xylem brand

Datasheet
US 2.71 Float Switch 7030 datasheet 1811

MJK Float Switch 7030

Connections and Dimensions

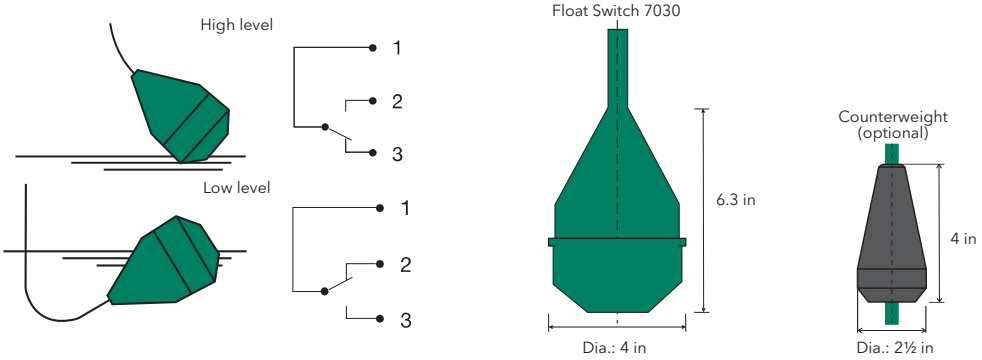

Specifications

Float Switch 7030	
Contact system	Mechanical change-over switch (SPDT)
Max. load	16 A @ 200 VAC, 0.5 A @ 220 VDC
Temperature	- 5 to + 150 °F
Materials	Polypropylene/Oil resistant PVC (float housing/cable)
Cable	3 X AWG 17, oil resistant PVC insulation. Dia. 1/3 in.
Approvals	Switch UL U83 161 3 (16A 125VAC). CE: EN61000-6-4 2007/EN61000-6-2 2005

Order Numbers

Float Switch 7030	
MJK202810	Float Switch 7030 with 12m/39 ft. cable
MJK202811	Float Switch 7030 with 20m/65 ft. cable
MJK202811-100	Float Switch 7030 with 30,5m/100 ft. cable
MJK202811-150	Float Switch 7030 with 46m/150 ft. cable
Float Switch 7030 incl. counter weight	
MJK202814	Float Switch 7030 202810 incl. 560917 with 12m/39ft cable
MJK202814-65	Float Switch 7030 202811 incl. 560917 with 20m/65ft cable
MJK202814-100	Float Switch 7030 202810 incl. 560917 with 30,5m/100ft cable
Float Switch 7030 acessories	
MJK560914	Plastic mounting bracket for cable Ø6-10mm
MJK560917	Counter weight f. level switch 400 gr.

For support in North Americas, please contact:

YSI
1700/1725 Brannum Lane
Yellow Springs, Ohio 45387
Tel. +1 937 767 7241 x 768

environmental@ysi.com
www.YSI.com

MJK Automation
Blokken 9
DK-3460 Birkerød
Denmark

Tel. +45 45 56 06 56
www.mjk.com

Connect, MµConnect, Chatter, MagFlux, Oxix, pHix compact, Shuttle and SuSix are ® registrered trademarks of MJK Automation. Expert and Connect Link are trademarks for MJK Automation. Other trademarks belong to their respective holders.

© 2014 Xylem, Inc. Datasheet Float Switch 7030 11 2018

TI00437P/00/EN/20.16
No. 71316865

Tags:
20-LIT-200
20-LIT-203-1/2/3/4
20-LIT-601

Technical Information
Deltapilot M FMB50, FMB51, FMB52, FMB53

Hydrostatic level measurement



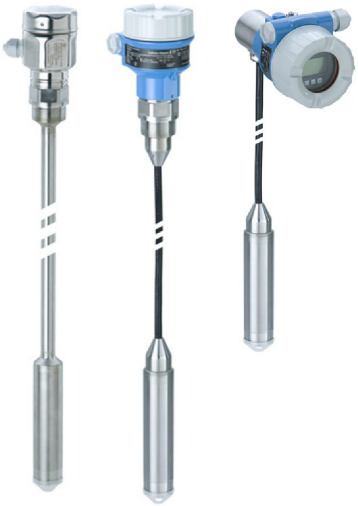

Pressure sensor with the CONTITE™ measuring cell
Condensate-resistant

Application

The device is used for the following measuring tasks:
- Hydrostatic pressure measurement in liquids and paste-like media in all areas of process engineering, process measuring technology, pharmaceuticals and the food industry
- Level, volume or mass measurements in liquids

Your benefits

- Very good reproducibility and long-term stability
- Maximum plant safety provided by one-of-a-kind, condensate-proofed CONTITE measuring cell
- High reference accuracy: ±0.2 %
  optionally ±0.1 %
- Turn down 100:1
- Standardized platform for differential pressure, hydrostatics, and pressure (Deltabar M – Deltapilot M – Cerabar M)
- Simple, fast commissioning through a user interface designed for real-world applications
- Used for process pressure monitoring up to SIL2, certified to IEC 61508 Edition 2.0 and IEC 61511 by TÜV NORD
- Usage in drinking water: KTW, NSF

Endress+Hauser
People for Process Automation

Table of contents

Document information 4
Symbols used 4
Terms and abbreviations 6
Turn down calculation 7

Function and system design 8
Device selection 8
Measuring principle 10
Level measurement in closed tanks with pressure overlay . . 11
Density measurement 12
Level measurement with automatic density correction (with media changing in the tank) 12
Electrical differential pressure measurement with gauge pressure sensors 13
Communication and data processing 13

Input 14
Measured variable 14
Measuring range 14

Output 15
Output signal 15
Signal range – 4 to 20 mA HART 15
Signal on alarm 15
Load - 4 to 20 mA HART 15
Dead time, time constant 16
Dynamic behavior: current output 16
Dynamic behavior: HART 16
Dynamic behavior: PROFIBUS PA 17
Dynamic behavior: FOUNDATION Fieldbus 17
Damping 17
Firmware version 17
Galvanic isolation 18
Protocol-specific data 18

Power supply 22
Terminal assignment 22
Supply voltage 22
Current consumption 23
Electrical connection 23
Terminals 23
Cable entry 23
Connector 24
Cable specification 25
Start-up current HART 25
Residual ripple 25
Influence of power supply 25
Overvoltage protection (optional) 26

Performance characteristics 27
Reference operating conditions 27
Influence of orientation 27
Calibration position 27
Resolution 27
Reference accuracy 27
Thermal change in the zero output and the output span 28
Total performance 28
Long-term stability 28
Total error 28
Warm-up period 28

Installation 29
General installation instructions 29
FMB50 29
FMB51/FMB52/FMB53 29
Supplementary installation instructions 30
Wall and pipe mounting 30
"Separate housing" version 31
Oxygen applications 32
PWIS cleaning 32
Applications with hydrogen 32
Special measuring cells for acids, alkalis or sea water (not FMB50) 32

Environment 33
Ambient temperature limits 33
Storage temperature range 33
Climate class 33
Degree of protection 33
Vibration resistance 33
Electromagnetic compatibility 34

Process 35
Process temperature range 35
Lateral load FMB51 (static) 35
Pressure specifications 35

Mechanical construction 36
Device height 36
F31 housing, aluminum 36
F15 housing, stainless steel (hygienic) 37
Diameter of the process isolating diaphragm 37
Process connections FMB50, FMB51, FMB52 37
Process connections FMB50, FMB51, FMB52 38
Process connections FMB50, FMB51, FMB52 - continued . . 39
Process connections FMB50, FMB51, FMB52 - continued . . 40
Process connections FMB50 - continued 41
Process connections FMB50 - continued 42
Process connections FMB51 (rod version) 44
Process connections FMB52 (cable version) 46
Dimensions of FMB53 with F31 housing, suspension clamp and mounting bracket 48
Dimensions of FMB53 with F15 housing, suspension clamp and mounting bracket 49
Wall and pipe mounting with "Separate housing" version . . . 50
Materials not in contact with process 53
Materials in contact with the process 56

Operability 59
Operating concept 59
Onsite operation 59
Operating languages 61
Remote operation 61
System integration 62

Certificates and approvals 63
CE mark 63
RCM-Tick marking 63
Ex approvals 63
EAC conformity 63
Suitability for hygienic processes 63
Certificate of Compliance ASME BPE 2012 (FMB50 only) . . 64
Functional safety SIL 64
Overfill protection 64
AD2000 64
Pressure Equipment Directive (PED) 64
Manufacturer declaration 64
Marine approval 64
Other standards and guidelines 65
Drinking water approval 65
Classification of process sealing between electrical systems and (flammable or combustible) process fluids in accordance with ANSI/ISA 12.27.01 65
Inspection certificate 65
Calibration; unit 66
Calibration 66
Service 66

Ordering information 67
Configuration data sheet 67

Accessories 69
Suspension clamp (FMB53 only) 69
Extension cable shortening kit (FMB53 only) 69
M12 connector 69
Welding necks and Weld-in tool flanges 69
Adapter Uni for FMB50 70

Documentation. 71
Technical Information 71
Operating Instructions 71
Brief Operating Instructions 71
Functional safety manual (SIL) 71
Safety Instructions 71
Installation/Control Drawings 72
Combination certificate 72
Overfill protection 72

Registered trademarks 73
HART® 73
PROFIBUS® 73
FOUNDATION™ Fieldbus 73

Document information

Symbols used

Safety symbols

Symbol	Meaning
 A0011189-EN	**DANGER!** This symbol alerts you to a dangerous situation. Failure to avoid this situation will result in serious or fatal injury.
 A0011190-EN	**WARNING!** This symbol alerts you to a dangerous situation. Failure to avoid this situation can result in serious or fatal injury.
 A0011191-EN	**CAUTION!** This symbol alerts you to a dangerous situation. Failure to avoid this situation can result in minor or medium injury.
 A0011192-EN	**NOTE!** This symbol contains information on procedures and other facts which do not result in personal injury.

Electrical symbols

Symbol	Meaning
A0018335	**Direct current** A terminal at which DC voltage is present or through which direct current flows.
A0018336	**Alternating current** A terminal at which alternating voltage is present or through which alternating current flows.
 A0018337	**Direct current and alternating current** ▪ A terminal at which alternating voltage or DC voltage is present. ▪ A terminal through which alternating current or direct current flows.
 A0018338	**Ground connection** A grounded terminal which, as far as the operator is concerned, is grounded via a grounding system.
 A0018339	**Protective ground connection** A terminal which must be connected to ground prior to establishing any other connections.
 A0011201	**Equipotential connection** A connection that has to be connected to the plant grounding system: This may be a potential equalization line or a star grounding system depending on national or company codes of practice.

Tool symbols

Symbol	Meaning
 A0011219	Phillips head screwdriver
 A0011220	Flat-blade screwdriver
 A0013442	Torx screwdriver
 A0011222	Hexagon wrench
 A0011221	Allen screw

Symbols for certain types of information

Symbol	Meaning
 A0011182	**Permitted** Indicates procedures, processes or actions that are permitted.
 A0011183	**Preferred** Indicates procedures, processes or actions that are preferred.
 A0011184	**Forbidden** Indicates procedures, processes or actions that are forbidden.
 A0011193	**Tip** Indicates additional information.
 A0015483	**Reference to documentation** Refers to the corresponding device documentation.
 A0015484	**Reference to page** Refers to the corresponding page number.
 A0015486	**Reference to graphics** Refers to the corresponding graphic number and page number.
1. , 2. , ...	Series of steps
 A0015488	**Help in the event of a problem**

Symbols in graphics

Symbol	Meaning
1, 2, 3, 4 etc.	Numbering for main items
1. , 2. , ...	Series of steps
A, **B**, **C**, **D** etc.	Views
A-A, **B-B**, etc.	Sections
 A0011187	**Hazardous area** Indicates the hazardous area.
 A0011188	Safe area (non-hazardous area) Indicates the non-hazardous area.

Terms and abbreviations

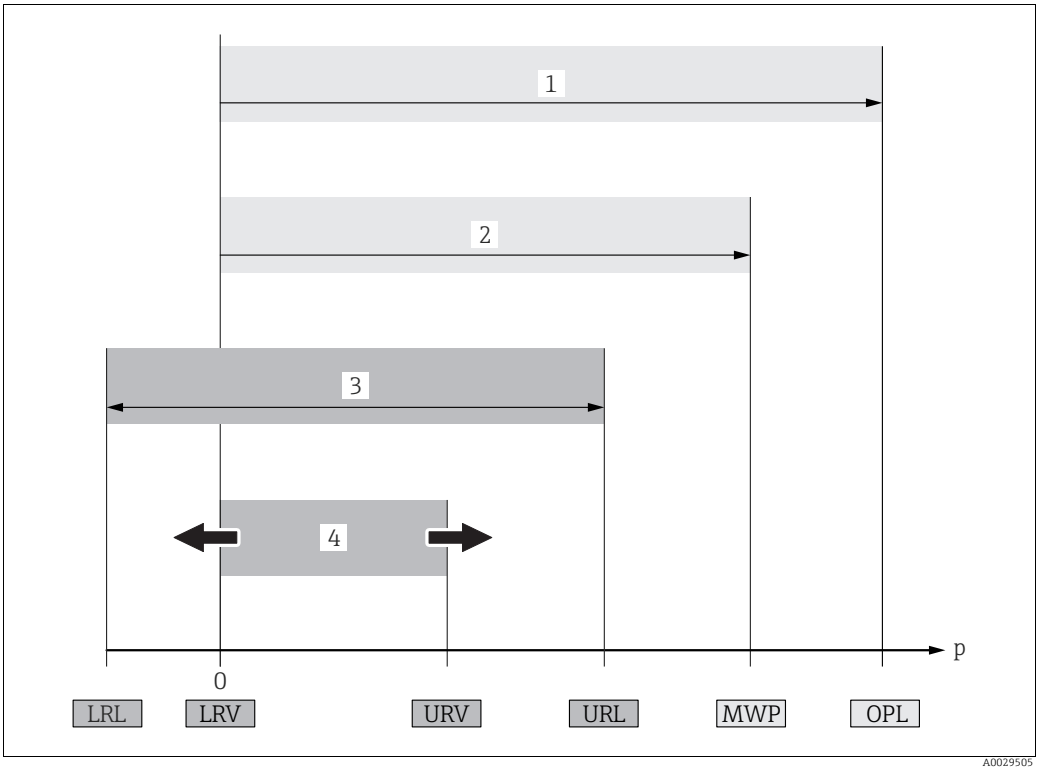

Position	Term/Abbreviation	Explanation
1	OPL	The OPL (over pressure limit = sensor overload limit) for the sensors depends on the lowest-rated element, with regard to pressure, of the selected components, i.e. the process connection must be taken into consideration in addition to the measuring cell. Also observe pressure-temperature dependency. For the relevant standards and additional notes, see the "→ 35" section. The OPL may be applied for a limited time period.
2	MWP	The MWP (maximum working pressure) for the sensors depends on the lowest-rated element, with regard to pressure, of the selected components, i.e. the process connection has to be taken into consideration in addition to the measuring cell. Also observe pressure-temperature dependency. For the relevant standards and additional notes, see the "→ 35" section. The MWP may be applied for an unlimited time.
3	Maximum sensor measuring range	Range between LRL and URL This span is the maximum calibratable/adjustable measuring span.
4	Calibrated/Adjusted measuring span	Range between LRV and URV Factory setting: 0...URL Other calibrated spans can be ordered with customised settings.
p	-	Pressure
-	LRL	Lower range limit
-	URL	Upper range limit
-	LRV	Lower range value
-	URV	Upper range value
-	TD	Turn down

Turn down calculation

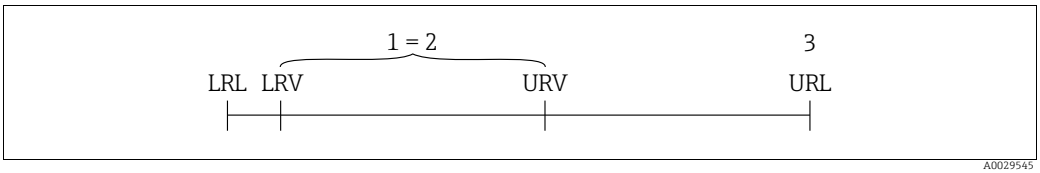

1 Calibrated/Adjusted measuring span
2 Zero-based span
3 Upper range limit

Example

- Sensor: 10 bar (150 psi)
- Upper range limit (URL) = 10 bar (150 psi)
- Calibrated/Adjusted measuring span: 0...5 bar (0...75 psi)
- Lower range value (LRV) = 0 bar
- Upper range value (URV) = 5 bar (75 psi)

Turn down (TD):

$$TD = \frac{URL}{|URV - LRV|}$$

$$TD = \frac{10\ \text{bar (150 psi)}}{|5\ \text{bar (75 psi)} - 0\ \text{bar (0 psi)}|} = 2$$

In this example, the TD is thus 2:1.
This span is based on the zero point.

Function and system design

Device selection

Deltapilot M – Product family	**FMB50**  A0023537 **Compact version**	**FMB51** 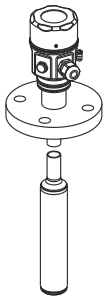 A0023538 **Rod version**	**FMB52** 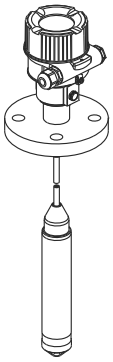 A0023539 **Cable version**	**FMB53** 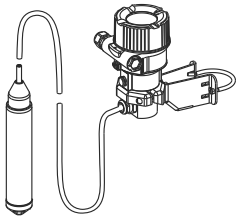 A0023540 **Cable version with Mounting bracket**
Field of application	– Level measurement – Pressure measurement			
Industries	Food, pharmaceuticals, chemicals, power plants, automotive, etc.			Environment (freshwater and wastewater)
Process connections	– Thread – Flanges – Flush-mounted hygienic connections	– Thread – Flanges	– Thread – Flanges	Suspension clamp
Measuring ranges	From −0.1 to +0.1 (-1.5 to +1.5 psi) bar to −1 bar to +10 bar (-15 to 150 psi)			
OPL	Max. 40 bar (600 psi)			
Process temperature range	−10 to +100 °C (+14 to +212°F) (+135 °C (275°F) for 30 minutes maximum)	−10 to +85 °C (+14 to +185°F)	With PE cable (unmoved): −10 to +70 °C (+14 to +158°F) With FEP cable (unmoved): −10 to +80 °C (+14 to +176°F)	
Ambient temperature range	▪ Without LCD display: -40 to +85 °C (-40 to +185°F) ▪ With LCD display: -20 to +70 °C (-4 to +158°F) (extended temperature application range -40 to 85 °C (-40 to +158°F) with restrictions in optical properties such as display speed and contrast) ▪ Separate housing: -20 to +60 °C (-4 to +140°F)			
Reference accuracy	0.2 % (option 0.1 %) depends on the measuring range → 27			
Supply voltage	– 11.5 to 45 V DC (versions with plug-in connection 35 V DC) – For intrinsically safe device versions: 11.5 to 30 V DC			
Output	4 to 20 mA with superimposed HART protocol, PROFIBUS PA or FOUNDATION Fieldbus			
Options	– Gold/rhodium-coated process isolating diaphragm – 3.1 inspection certificate – 3A approval and EHEDG approval for FMB50 – Specific firmware versions – Initial device settings can be ordered – Separate housing			
Specialties	– Absolute resistance to condensate thanks to hermetically sealed CONTITE™ cell – Maximum flexibility thanks to modular design – Special cleaning of the transmitter to remove paint-wetting substances, for use in paint shops			

FMB50, FMB51, FMB52 universal application

- Modular probe program to ensure optimum process adaptation
- FMB50 compact version: installation in the tank from below or from the side
- FMB51, FMB52 rod and cable extension: installation from above, i.e. easy to retrofit ground tanks, no additional opening in the vessel floor

FMB50 optimized for hygienic applications

- All typical flush-mounted process connections can be supplied
- Welding flanges
- Stainless steel housing
- All the sanitary process connections are gap-free and can be cleaned so that the unit is free of residue, e.g. CIP cleaning
- USDA/H1-approved transfer liquid as per FDA Directive
- 3A approval or EHEDG approvals

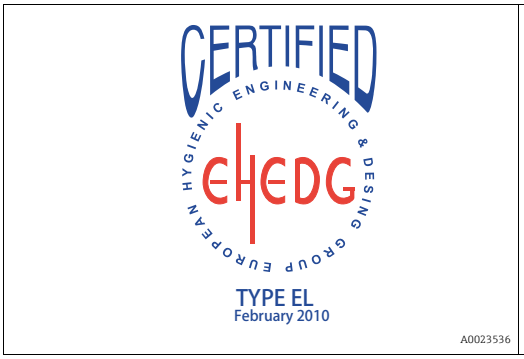

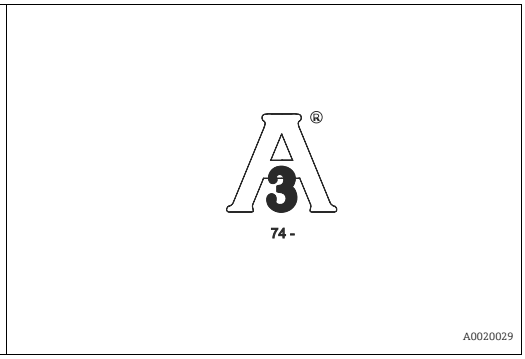

FMB53 for level measurement in water and wastewater

- The housing with the electronic insert is mounted outside shafts and vessels in such a way that it is protected from flooding. The extension cable is secured with a suspension clamp.
- The measuring cell tube made of stainless steel (AISI 316L) and the Alloy process isolating diaphragm allow use in aggressive media such as wastewater for example.
- Extension cable up to 400 m (1312 ft) in length (up to 100 m (328 ft) in Ex-areas) without strain relief.
- Special measuring cell with gold/rhodium coating for applications in which severe hydrogen formation can occur (e.g. digested sludge); → 32.
- Special measuring cell with gold/platinum coating for acids, alkalis or sea water; → 32.

Measuring principle

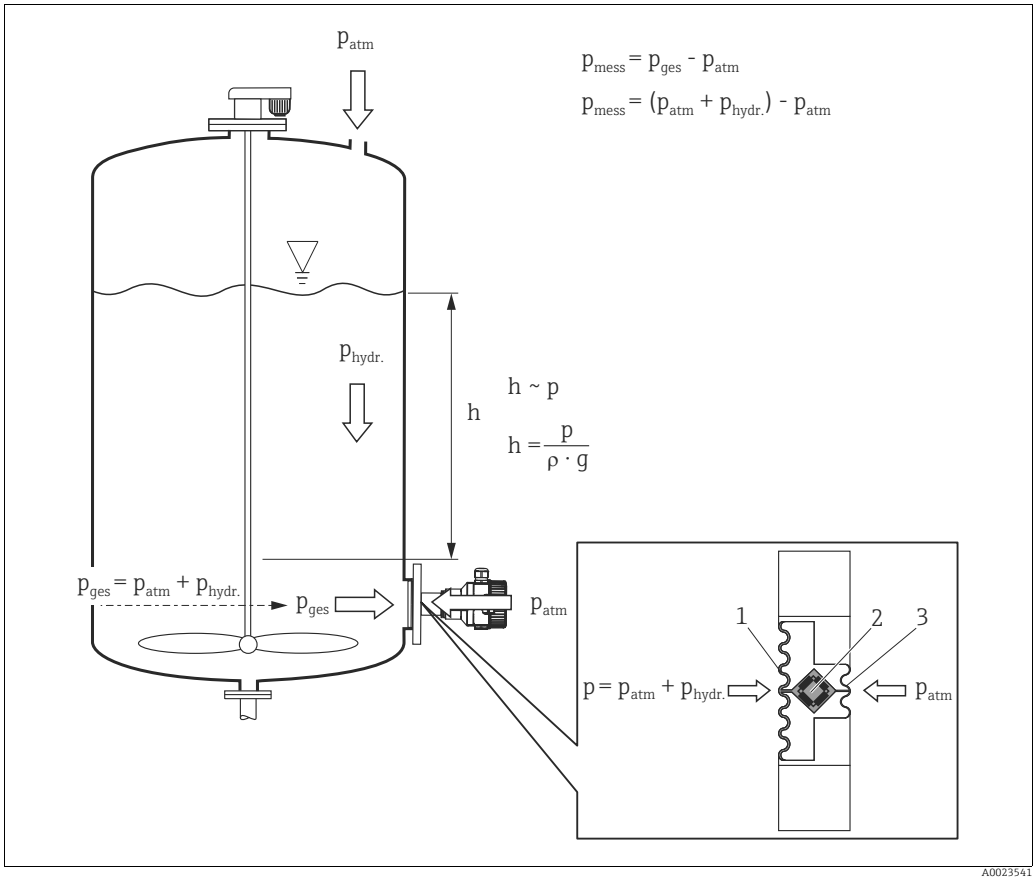

Deltapilot M hydrostatic level measurement and measuring principle

1 Rear isolating membrane of the CONTITE™ measuring cell
2 Measuring element
3 Process isolating diaphragm

g Gravitational acceleration
h Level height
p_{ges} Total pressure = hydrostatic pressure + atmospheric pressure
p_{atm} Atmospheric pressure
$p_{hydr.}$ Hydrostatic pressure
p_{mess} Measured pressure in the measuring cell = hydrostatic pressure
ρ Density of the medium

Due to its weight, a liquid column creates hydrostatic pressure. If the density is constant, the hydrostatic pressure depends solely on the height h of the liquid column.
The CONTITE™ measuring cell, which works on the principle of the gauge pressure sensor, constitutes the core of Deltapilot M. In contrast to conventional gauge pressure sensors, the precision measuring element (2) in the CONTITE™ measuring cell is absolutely protected, situated between the process isolating diaphragm (3) and the rear isolating membrane (1). Thanks to this hermetic sealing of the measuring element, the CONTITE™ measuring cell is absolutely insensitive to condensate/ condensation and aggressive gases. The pressure applied is transferred from the process isolating diaphragm to the measuring element by means of an oil without any loss in pressure.
Any measured errors due to fluctuations in temperature are compensated for in the electronics unit by means of the sensor temperature.

A linearization function with max. 32 points, based on a table entered either manually or semi-automatically, can be activated locally or remotely. This function facilitates measurement in engineering units, and provides a linear output signal for spherical and horizontal cylindrical vessels, and vessels with a conical outlet.

Level measurement in closed tanks with pressure overlay

You can determine the differential pressure in tanks with pressure overlay using two Deltapilot M. The pressure measured values of the two probes are sent to a signal processing unit such as Endress+Hauser RMA or a PLC. The signal processing unit or PLC determines the difference in pressure and uses this to calculate the level and the density where necessary.

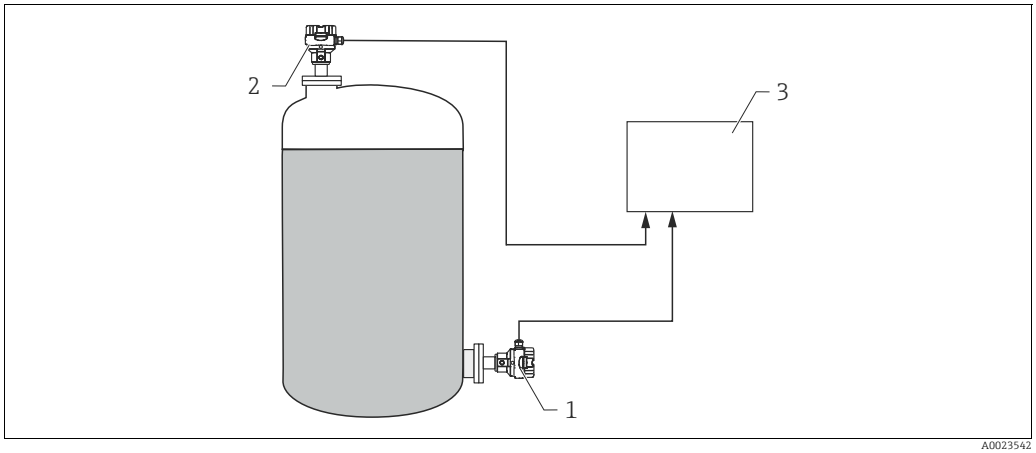

Level measurement in a closed tank with pressure overlay

1 Deltapilot 1 measures the total pressure (hydrostatic pressure and top pressure)
2 Deltapilot 2 measures the top pressure
3 Signal processing unit determines the difference in pressure and uses this to calculate the level

NOTICE

Measured errors can occur.

Large measured errors can occur if the ratio of the level to the top pressure is >1:6. This does not affect reproducibility.

- When selecting the measuring cell, make sure you select measuring ranges that are sufficiently wide (→ see example).

Example:

- Max. hydrostatic pressure = 600 mbar (9 psi)
- Max. top pressure (Deltapilot 2) = 300 mbar (4.5 psi)
- Max. total pressure, measured with Deltapilot 1 = 300 mbar (4.5 psi) + 600 mbar (9 psi) = 900 mbar (13.5 psi) ⇒ measuring cell to be selected: 0 to 1200 mbar (0 to 18 psi)
- Max. pressure, measured with Deltapilot 2: 300 mbar (4.5 psi) ⇒ measuring cell to be selected: 0 to 400 mbar (6 psi)

NOTICE

Possibility of probe 2 flooding during differential pressure measurement.

Measured errors can occur.

- When installing, make sure that probe 2 cannot be flooded.

Density measurement

You can measure the density in tanks with pressure overlay using two Deltapilot M and a signal processing unit or a PLC. The signal processing unit or the PLC calculates the density from the known distance between the two Deltapilot M devices Δh and the two measured values p_1 and p_2.

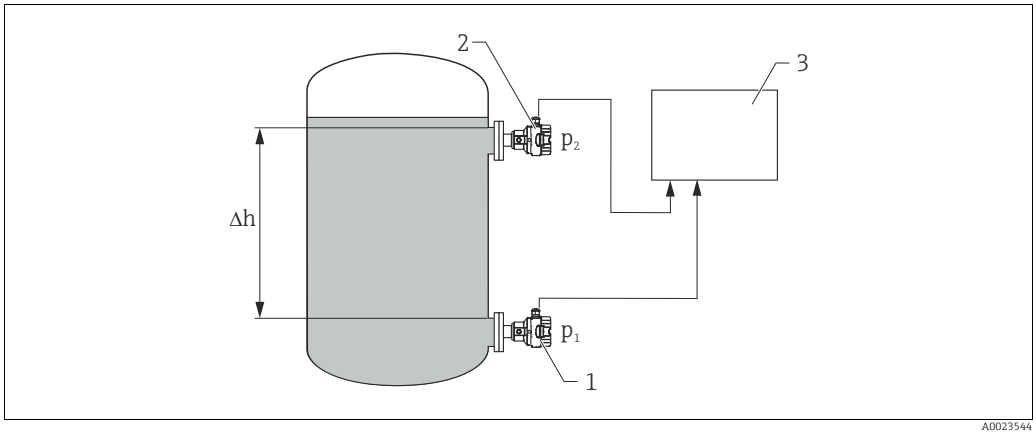

Level measurement in a closed tank with pressure overlay

1 Deltapilot 1 determines pressure measured value p_1
2 Deltapilot 2 determines pressure measured value p_2
3 Signal processing unit determines the density from the two measured values p_1 and p_2 and the distance Δh

Level measurement with automatic density correction (with media changing in the tank)

Level measurement with automatic density correction is possible in conjunction with a limit switch such as Liquiphant and a PLC. The limit switch always switches at the same level. In the switch point, the signal processing unit determines the corrected density from the pressure of the Deltapilot M currently measured and the known distance between Deltapilot M and the limit switch. The signal processing unit then calculates the level from the new density and the measured pressure of the Deltapilot M.

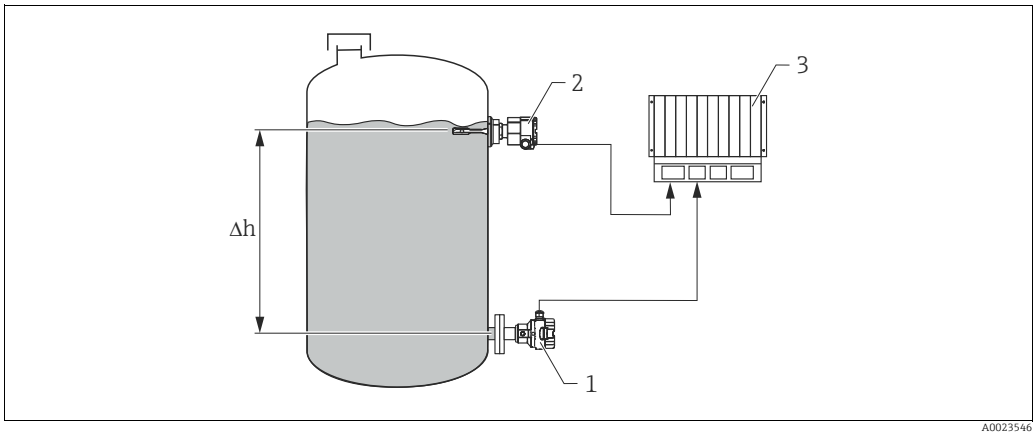

Level measurement with automatic density correction

1 Deltapilot M
2 Liquiphant
3 PLC

Electrical differential pressure measurement with gauge pressure sensors

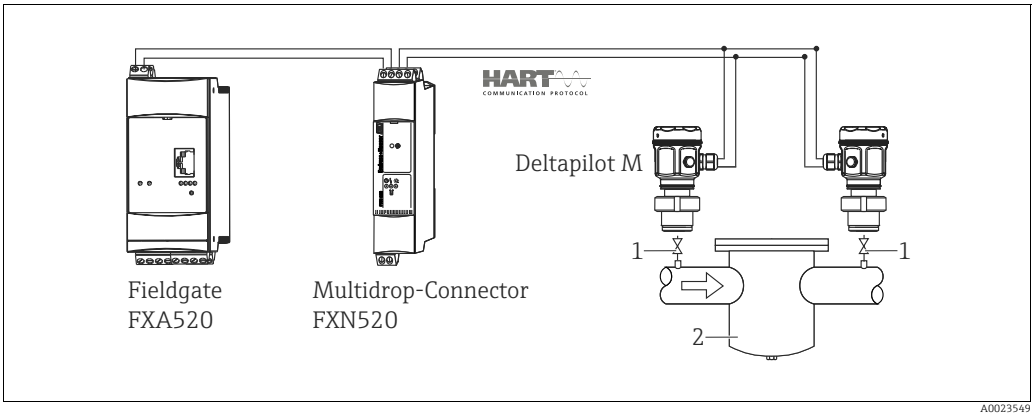

1 Shut-off valves

2 e.g. filter

In the example given, two Deltapilot M devices (each with a gauge pressure sensor) are interconnected. The pressure difference can thus be measured using two independent Deltapilot M devices.

⚠ WARNING

Risk of explosion!

- ▸ If using intrinsically safe devices, strict compliance with the rules for interconnecting intrinsically safe circuits as stipulated in IEC60079-14 (proof of intrinsic safety) is mandatory.

Communication and data processing

- 4 to 20 mA with HART communication protocol
- PROFIBUS PA
  - The Endress+Hauser devices meet the requirements of the FISCO model.
  - Due to the low current consumption of 11 mA ± 1 mA, the following number of devices can be operated on one bus segment if installing as per FISCO:
    - up to 8 Deltapilot M for Ex ia, CSA IS and FM IS applications
    - up to 31 Deltapilot M for all other applications, e.g. in non-hazardous areas, Ex nA, etc.

  Further information on PROFIBUS PA can be found in Operating Instructions BA00034S "PROFIBUS DP/PA: Guidelines for planning and commissioning" and in the PNO Guideline.
- FOUNDATION Fieldbus
  - The Endress+Hauser devices meet the requirements of the FISCO model.
  - Due to the low current consumption of 16 mA ± 1 mA, the following number of devices can be operated on one bus segment if installing as per FISCO:
    - up to 6 Deltapilot M for Ex ia, CSA IS and FM IS applications
    - up to 22 Deltapilot M for all other applications, e.g. in non-hazardous areas, Ex nA, etc.

  Further information on FOUNDATION Fieldbus, such as requirements for bus system components can be found in Operating Instructions BA00013S "FOUNDATION Fieldbus Overview".

Input

Measured variable Hydrostatic pressure

Measuring range

Sensor	Maximum sensor measuring range		Smallest calibratable measuring span (preset at the factory) [1]	MWP	OPL	Vacuum resistance [2] Synthetic oil/ Inert oil	Option [3]
	lower (LRL) [4]	upper (URL)					
[bar (psi)]	[bar (psi)]	[bar (psi)]	[bar (psi)]	[bar (psi)]	[bar (psi)]	[bar_{abs} (psi_{abs})]	
0.1 (1.5)	−0.1 (-1.5)	+0.1 (+1.5)	0.01 (0.15)	2.7 (40.5)	4 (60)	0.01/0.04 (0.145/0.6)	1C
0.4 (6)	−0.4 (-6)	+0.4 (+6)	0.02 (0.3)	5.3 (79.5)	8 (120)		1F
1.2 (18)	−1 (-15)	+1.2 (+18)	0.06 (1)	16 (240)	24 (360)		1H
4 (60)	−1 (-15)	+4 (+60)	0.2 (3)	16 (240)	24 (360)		1M
10 (150)	−1 (-15)	+10 (+150)	0.5 (7.5)	27 (405)	40 (600)		1P

1) Factory calibration Turn down: Max 20:1, higher on request.

2) The vacuum resistance applies to the measuring cell at reference conditions.

3) Product Configurator, "Sensor range" ordering feature

4) By default, the device is set to a lower range limit of 0 bar. Please specify in the order if the lower range limit is to be set to a different default value.

Output

Output signal

- 4 to 20 mA with superimposed digital communication protocol HART 6.0, 2-wire
- Digital communication signal PROFIBUS PA (Profile 3.02)
- Digital communication signal FOUNDATION Fieldbus

Output	Option [1]
4 to 20mA HART	2
PROFIBUS PA	3
FOUNDATION Fieldbus	4

1) Product Configurator, "Output" ordering feature

Signal range – 4 to 20 mA HART

3.8 to 20.5 mA

Signal on alarm

As per NAMUR NE 43

- 4 to 20 mA HART
  Options:
  - Max. alarm: can be set from 21 to 23 mA (Factory setting: 22 mA)
  - Hold measured value: last measured value is held
  - Min. alarm: 3.6 mA
- PROFIBUS PA: can be set in the Analog Input block,
  Options: Last Valid Out Value (factory setting), Fail-safe Value, Status Bad
- FOUNDATION Fieldbus: can be set in the Analog Input block,
  Options: Last Good Value, Fail-safe Value (factory setting), Wrong Value

Load - 4 to 20 mA HART

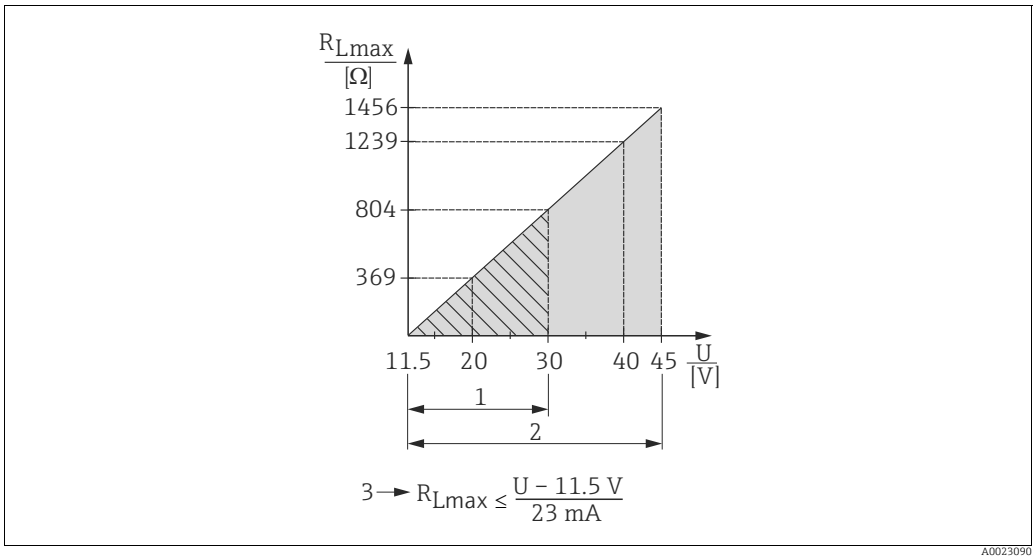

Load diagram

1 Power supply 11.5 to 30 V DC for intrinsically safe device versions
2 Power supply 11.5 to 45 V DC (versions with plug-in connector 35 V DC) for other types of protection and for uncertified device versions
R_{Lmax} Maximum load resistance
U Supply voltage

When operating via a handheld terminal or via a PC with an operating program, a minimum communication resistance of 250 Ω must be taken into account.

Dead time, time constant

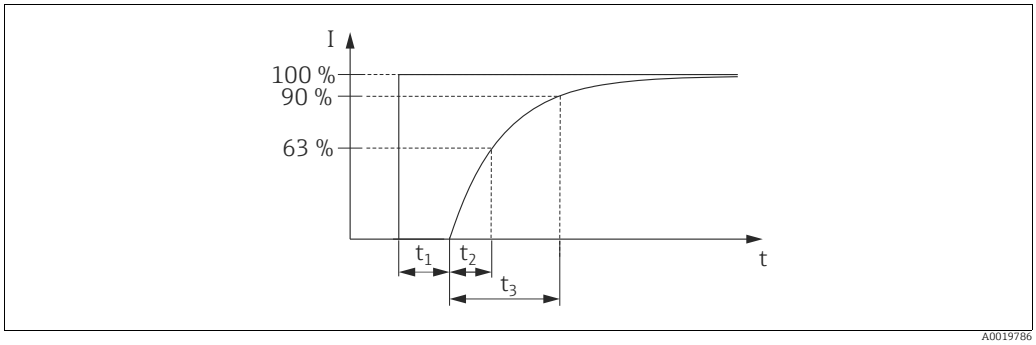

Presentation of the dead time and the time constant

Dynamic behavior: current output

	Type	Dead time (t_1) [ms]	Time constant T63 (= t_2) [ms]	Time constant T90 (= t_3) [ms]
max.	FMB50	60	90	210
max.	FMB51 FMB52 FMB53	500	250	-

Dynamic behavior: HART

	Type	Dead time (t_1) [ms]	Dead time (t_1) [ms] + Time constant T63 (= t_2) [ms]	Dead time (t_1) [ms] + Time constant T90 (= t_3) [ms]
min.	FMB50	220	310	370
max.		1020	1110	1170
min.	FMB51 FMB52 FMB53	660	910	-
max.		1460	1710	-

Reading cycle

- Acyclic: max. 3/s, typical 1/s (depends on command # and number of preambles)
- Cyclic (Burst): max. 3/s, typical 2/s

The Deltapilot M commands the BURST MODE function for cyclic value transmission via the HART communication protocol.

Cycle time (update time)

Cyclic (Burst): min. 300 ms

Response time

- Acyclic: min. 330 ms, typical 590 ms (depends on command # and number of preambles)
- Cyclic (Burst): min. 160 ms, typical 350 ms (depends on command # and number of preambles)

Dynamic behavior: PROFIBUS PA

	Type	Dead time (t_1) [ms]	Dead time (t_1) [ms] + Time constant T63 (= t_2) [ms]	Dead time (t_1) [ms] + Time constant T90 (= t_3) [ms]
min.	FMB50	95	185	245
max.		1195	1285	1345
min.	FMB51 FMB52 FMB53	535	785	-
max.		1635	1885	-

Reading cycle

- Cyclic: max. 30/s (dependent on the number and type of function blocks used in a closed-control loop)
- Acyclic: typical 25/s

Cycle time (update time)

min. 100 ms
The cycle time in a bus segment in cyclic data communication depends on the number of devices, on the segment coupler used and on the internal PLC cycle time.

Response time

- Cyclic: approx. 8 to 13 ms (depends on Min. Slave Interval)
- Acyclic: approx. 23 to 35 ms (depends on Min. Slave Interval)

Dynamic behavior: FOUNDATION Fieldbus

	Type	Dead time (t_1) [ms]	Dead time (t_1) [ms] + Time constant T63 (= t_2) [ms]	Dead time (t_1) [ms] + Time constant T90 (= t_3) [ms]
min.	FMB50	105	195	255
max.		1105	1195	1255
min.	FMB51 FMB52 FMB53	545	795	-
max.		1545	1795	-

Reading cycle

- Cyclic: max. 10/s (dependent on the number and type of function blocks used in a closed-control loop)
- Acyclic: typical 5/s

Cycle time (update time)

Cyclic: min. 100 ms

Response time

- Cyclic: max. 20 ms (for standard bus parameter settings)
- Acyclic: typical 70 ms (for standard bus parameter settings)

Damping

A damping affects all outputs (output signal, display).

- Via on-site display, handheld terminal or PC with operating program, continuous from 0...999 s
- Via DIP-switch on the electronic insert, switch position "on" (= set value) and "off" (= damping switched off)
- Factory setting: 2 s

Firmware version

Designation	Option [1]
01.00.zz, FF, DevRev01	76
01.00.zz, PROFIBUS PA, DevRev01	77
01.00.zz, HART, DevRev01	78

1) Product Configurator, "Firmware version" ordering feature

Galvanic isolation

The following devices have a galvanic isolation between electronic and probe:
- FMB51, FMB52, FMB53
- FMB50 with separate housing

Protocol-specific data

HART

Manufacturer ID	17 (11 hex)
Device Type Code	35 (23 hex)
Device Revision	01 (01 hex) - SW version 01.00.zz
HART specification	6
DD Revision	▪ 01 (Dutch) ▪ 02 (Russian)
Device description files (DTM, DD)	Information and files can be found: ▪ www.endress.com ▪ www.hartcomm.org
HART load	Min. 250 Ω
HART device variables	The measured values can be freely assigned to the device variables: **Measured values for PV (primary variable)** ▪ Pressure ▪ Level ▪ Tank content **Measured values for SV, TV (second and third variable)** ▪ Pressure ▪ Level **Measured values for QV (fourth variable)** ▪ Temperature
Supported functions	▪ Burst mode ▪ Additional Transmitter Status ▪ Device Locking ▪ Alternative operating modes

PROFIBUS PA

Manufacturer ID	17 (11 hex)
Ident number	1554 hex
Profile Version	3.02 ▪ SW Version 01.00.zz
GSD Revision	5
DD Revision	1
GSD File	Information and files can be found: ▪ www.endress.com ▪ www.profibus.org
DD Files	
Output values	**Measured values for PV (via Analog Input Function Block)** ▪ Pressure ▪ Flow ▪ Level ▪ Tank content **Measured values for SV** ▪ Pressure ▪ Temperature

Input values	Input value sent from PLC, can be shown on display
Supported functions	▪ Identification & Maintenance Simple device identification via control system and nameplate ▪ Condensed status[1)] ▪ Automatic ident number adaptation and switchable to following ident numbers[1)]: – 9700: Profile-specific transmitter identification number with the "Classic" or "Condensed" status". – 1503: Compatibility mode for the old Deltapilot M (DB50, DB50L, DB51, DB52, DB53). – 1555: Identification number for the new Deltapilot M (FMB50, FMB51, FMB52, FMB53). ▪ Device locking: The device can be locked by hardware or software.

1) Only with Profile Version 3.02

Data of the FOUNDATION Fieldbus interface

Basic data

Device Type	0x1023
Device Revision	01 (hex)
DD Revision	0x01021
CFF Revision	0x000102
ITK Version	5.2.0
ITK Certification Driver No.	IT067500
Link-Master (LAS) capable	Yes
Link Master / Basic Device selectable	Yes; Factory setting: Basic Device
Number of VCRs	44
Number of Link Objects in VFD	50
Number of FB-Schedule Objects	40

Virtual communication references (VCRs)

Permanent Entries	44
Client VCRs	0
Server VCRs	5
Source VCRs	8
Sink VCRs	0
Subscriber VCRs	12
Publisher VCRs	19

Link settings

Slot time	4
Min. inter PDU delay	12
Max. response delay	40

Transducer Blocks

Block	Content	Output values
TRD1 Block	Contains all parameters related to the measurement	▪ Pressure or level (channel 1) ▪ Process temperature (channel 2) ▪ Measured pressure value (channel 3) ▪ Max. pressure (channel 4) ▪ Level before linearization (channel 5)
Diagnostic Block	Contains diagnostic information	▪ Error code via DI channels (channel 10 to 15)
Display Block	Contains parameters to configure the onsite display	No output values

Function blocks

Block	Content	Number of blocks	Execution time	Functionality
Resource Block	The Resource Block contains all the data that uniquely identify the device. It is an electronic version of a nameplate of the device.	1		enhanced
Analog Input Block 1 Analog Input Block 2	The AI Block receives the measuring data from the Sensor Block, (selectable via a channel number) and makes the data available to other function blocks at its output. Enhancement: digital outputs for process alarms, fail safe mode.	2	25 ms	enhanced
Digital Input Block	This block contains the discrete data of the Diagnose Block (selectable via a channel number 10 to 15) and provides them for other blocks at the output.	1	20 ms	Standard
Digital Output Block	This block converts the discrete input and thus initiates an action (selectable via a channel number) in the DP Flow Block or in the TRD1 Block. Channel 20 resets the counter for max. pressure transgressions value and Channel 21 resets the Totalizer.	1	20 ms	Standard
PID Block	The PID Block serves as a proportional-integral-derivative controller and is used almost universally for closed-loop-control in the field including cascade and feedforward. Input IN can be indicated on the display. The selection is performed in the Display Block (DISPLAY_MAIN_LINE_CONTENT).	1	40 ms	Standard
Arithmetic Block	This block is designed to permit simple use of popular measurement math functions. The user does not have to know how to write equations. The math algorithm is selected by name, chosen by the user for the function to be performed.	1	35 ms	Standard
Input Selector Block	The Input Selector Block facilitates the selection of up to four inputs and generates an output based on the configured action. This block normally receives its inputs from AI Blocks. The block performs maximum, minimum, average and 'first good' signal selection. Inputs IN1 to IN4 can be indicated on the display. The selection is performed in the Display Block (DISPLAY_MAIN_LINE_1_CONTENT).	1	30 ms	Standard

Block	Content	Number of blocks	Execution time	Functionality
Signal Characterizer Block	The Signal Characterizer Block has two sections, each with an output that is a non-linear function of the respective input. The non-linear function is generated by a single look-up table with 21 arbitrary x-y pairs.	1	40 ms	Standard
Integrator Block	The Integrator Block integrates a variable as a function of the time or accumulates the counts from a Pulse Input Block. The block may be used as a totalizer that counts up until reset or as a batch totalizer that has a setpoint, where the integrated or accumulated value is compared to pre-trip and trip settings, generating a binary signal when the setpoint is reached.	1	35 ms	Standard

Additional function block information:

Instantiate Function Block	YES
Number of instantiate blocks	20

Power supply

⚠ WARNING

Incorrect connection can limit electrical safety!

- When using the measuring device in hazardous areas, installation must comply with the corresponding national standards and regulations and the Safety Instructions or Installation or Control Drawings → 71 ff, "Safety instructions" and "Installation/Control Drawings" ordering features.
- All explosion protection data are given in separate documentation which is available upon request. The Ex documentation is provided with all Ex-systems as standard → 71 ff, "Safety instructions" and "Installation/Control Drawings" ordering features.
- According to IEC/EN61010 a suitable disconnector has to be installed for the device
- HART: Overvoltage protection HAW569-DA2B for the non-hazardous area, ATEX II 2 (1) Ex ia IIC and IEC Ex ia can be ordered as an option (see "Ordering information" ordering feature).
- Protective circuits against reverse polarity, HF influences and overvoltage peaks are installed.
- The digital communication signal is transmitted to the bus via a 2-wire connection. The bus also provides the power supply.

Terminal assignment

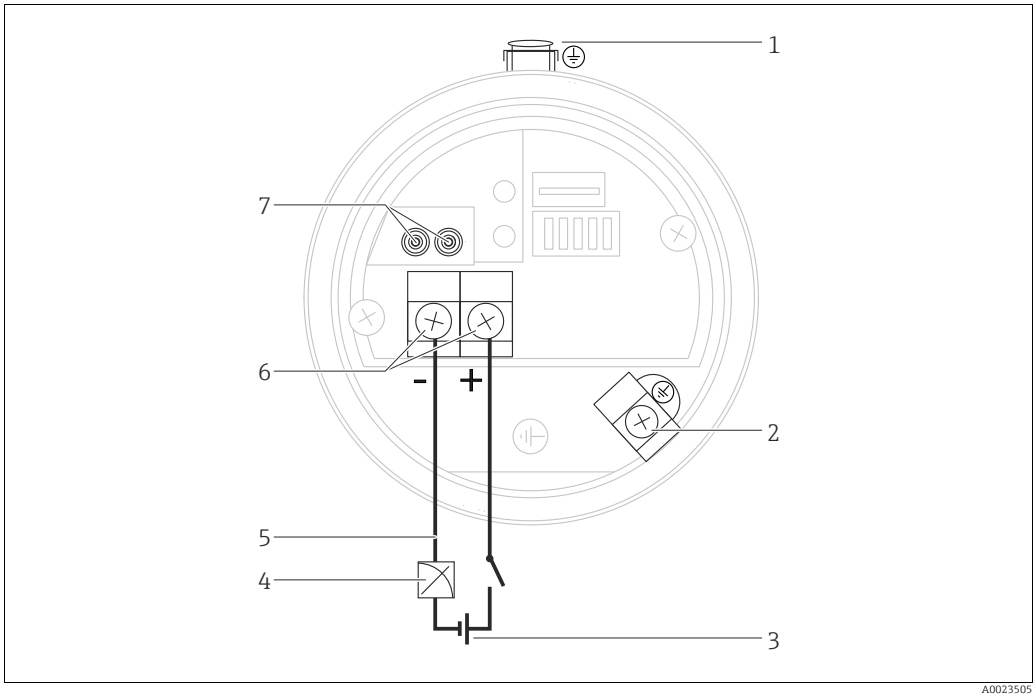

Electrical connection

1 *External grounding terminal*
2 *Internal grounding terminal*
3 *Supply voltage → 22*
4 *4...20 mA for HART devices*
5 *For HART and FOUNDATION Fieldbus devices: With a handheld terminal, all the parameters can be configured anywhere along the bus line via menu operation.*
6 *Terminals*
7 *For HART devices: test terminals, see section "Taking 4 to 20 mA test signal"*

Supply voltage

4 to 20 mA HART

Type of protection	Supply voltage
▪ Intrinsically safe	11.5 ... 30 V DC
▪ Other types of protection ▪ Devices without certificate	11.5 to 45 V DC (versions with plug-in connection 35 V DC)

Taking 4 to 20 mA test signal

A 4 to 20 mA test signal may be measured via the test terminals without interrupting the measurement.

PROFIBUS PA

- Version for non-hazardous areas: 9 to 32 V DC

FOUNDATION Fieldbus

- Version for non-hazardous areas: 9 to 32 V DC

Current consumption

- PROFIBUS PA: 11 mA ± 1 mA, switch-on current corresponds to IEC 61158-2, Clause 21
- FOUNDATION Fieldbus: 16 mA ± 1 mA, switch-on current corresponds to IEC 61158-2, Clause 21

Electrical connection

Cable entry	Degree of protection	Option [1]
M20 gland	IP66/68 NEMA 4X/6P	A
G ½" thread	IP66/68 NEMA 4X/6P	C
NPT ½" thread	IP66/68 NEMA 4X/6P	D
M12 plug	IP66/67 NEMA 4X/6P	I
7/8" plug	IP66/68 NEMA 4X/6P	M
HAN7D connector, 90 deg	IP65	P
PE cable 5m [2]	IP66/68 NEMA4X/6P + pressure compensation via cable	S
M16 valve connector	IP64	V

1) Product Configurator, "Electrical connection" ordering feature

2) Only for FMB50

PROFIBUS PA

The digital communication signal is transmitted to the bus via a 2-wire connection. The bus also provides the power supply. For further information on the network structure and grounding, and for further bus system components such as bus cables, see the relevant documentation, e.g. Operating Instructions BA00034S "PROFIBUS DP/PA: Guidelines for planning and commissioning" and the PNO Guideline.

FOUNDATION Fieldbus

The digital communication signal is transmitted to the bus via a 2-wire connection. The bus also provides the power supply. For further information on the network structure and grounding and for further bus system components such as bus cables, see the relevant documentation, e.g. Operating Instructions BA00013S "FOUNDATION Fieldbus Overview" and the FOUNDATION Fieldbus Guideline.

Terminals

- Supply voltage and internal ground terminal: 0.5 … 2.5 mm² (20…14 AWG)
- External ground terminal: 0.5 … 4 mm² (20…14 AWG)

Cable entry

Approval	Type	Clamping area
Standard, CSA GP ATEX II1/2G or II2G Ex ia, IEC Ex ia Ga/Gb or Ex ia Gb, FM/ CSA IS	Plastic M20x1.5	5 to 10 mm (0.2 to 0.39 in)
ATEX II1/2D Ex t, II1/2GD Ex ia, II3G Ex nA, IEC Ex t Da/Db	Metal M20x1.5 (Ex e)	7 to 10.5 mm (0.28 to 0.41 in)

For other technical data, see the housing section → 36 ff".

Connector

Devices with valve connector

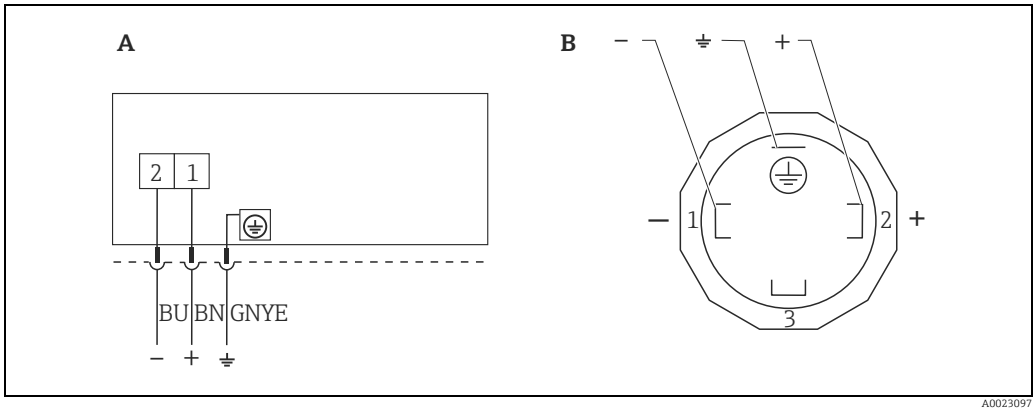

BN = brown, BU = blue, GNYE = green/yellow

A Electrical connection for devices with valve connector
B View of the connection on the device

Material: PA 6.6

Devices with Harting plug Han7D

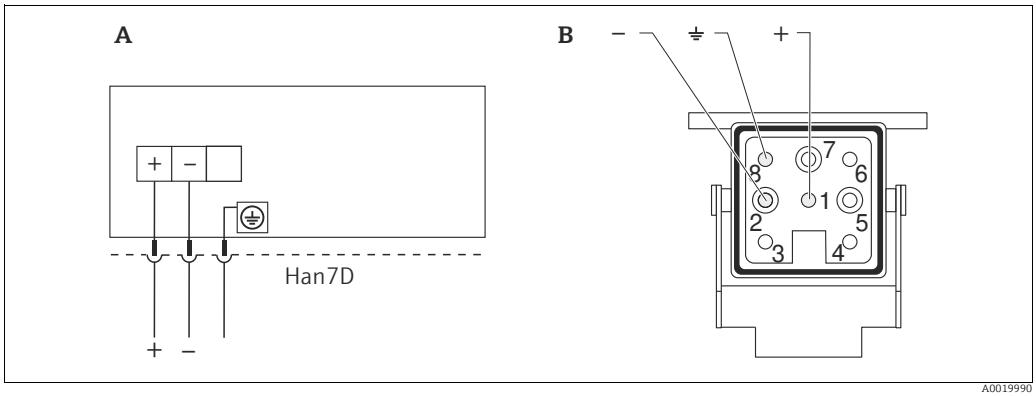

A Electrical connection for devices with Harting plug Han7D
B View of the connection on the device

Material: CuZn, gold-plated contacts of plug-in jack and connector

Devices with M12 plug

PIN assignment for M12 connector

PIN assignment for M12 connector	PIN	Meaning
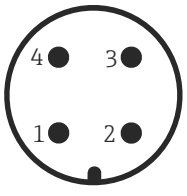	1	Signal +
	2	Not assigned
	3	Signal −
	4	Earth

Endress+Hauser offers the following accessories for devices with an M12 plug:
Plug-in jack M 12x1, straight
- Material: body PA; coupling nut CuZn, nickel-plated

- Degree of protection (fully locked): IP66/67
- Order number: 52006263

Plug-in jack M 12x1, elbowed
- Material: body PBT/PA; coupling nut GD-Zn, nickel-plated
- Degree of protection (fully locked): IP66/67
- Order number: 71114212

Cable 4x0.34 mm² (20 AWG) with M12 socket, elbowed, screw plug, length 5 m (16 ft)
- Material: body PUR; coupling nut CuSn/Ni; cable PVC
- Degree of protection (fully locked): IP66/67
- Order number: 52010285

Devices with 7/8" plug

PIN assignment for 7/8" connector

PIN assignment for 7/8" connector	PIN	Meaning
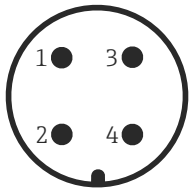 A0011176	1	Signal −
	2	Signal +
	3	Not assigned
	4	Shield

External thread: 7/8 - 16 UNC
- Material: 316L (1.4401)
- Protection: IP66/68

Cable specification

HART

- Endress+Hauser recommends using twisted, shielded two-wire cables.
- The cable outer diameter depends on the cable entry used.

PROFIBUS PA

Use a twisted, shielded two-wire cable, preferably cable type A

For further information on the cable specifications, see Operating Instructions BA00034S "PROFIBUS DP/PA: Guidelines for planning and commissioning", the PNO Guideline 2.092 "PROFIBUS PA User and Installation Guideline" and IEC 61158-2 (MBP).

FOUNDATION Fieldbus

Use a twisted, shielded two-wire cable, preferably cable type A

For further information on the cable specifications, see Operating Instructions BA00013S "FOUNDATION Fieldbus Overview", FOUNDATION Fieldbus Guideline and IEC 61158-2 (MBP).

Start-up current HART

12 mA or 22 mA (selectable)

Residual ripple

No influence on 4 to 20 mA signal up to ±5 % residual ripple within the permitted voltage range [according to HART hardware specification HCF_SPEC-54 (DIN IEC 60381-1)]

Influence of power supply

≤ 0.001 % of URL/V

Overvoltage protection (optional)

The device can be fitted with overvoltage protection. The overvoltage protection is mounted at the factory on the housing thread (M20x1.5) for the cable gland and is approx. 70 mm (2.76 in) in length (take additional length into account when installing). The device is connected as illustrated in the following graphic.
For details refer to TI001013KEN, XA01003KA3 and BA00304KA2.
Ordering information:
Product Configurator, "Mounted accessories" ordering feature, option NA

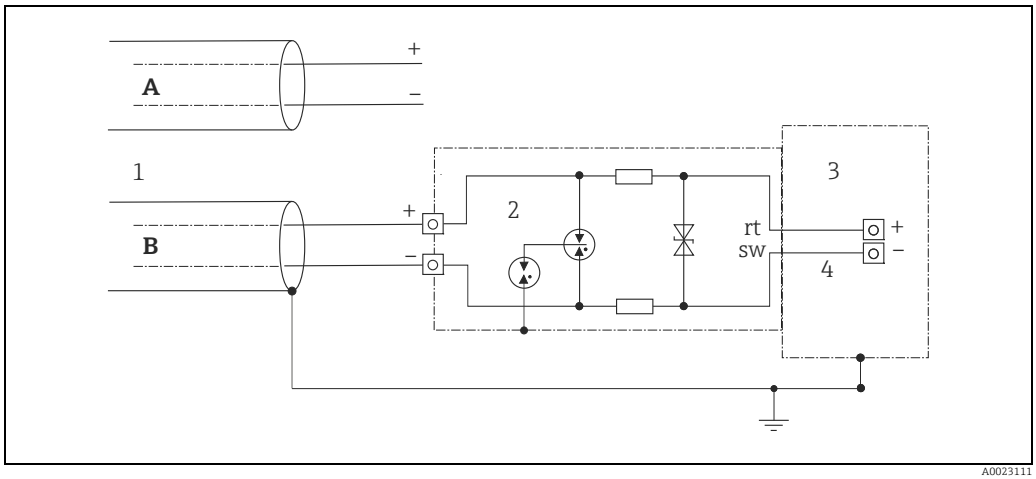

A Without direct shield grounding
B With direct shield grounding
1 Incoming connection cable
2 HAW569-DA2B
3 Unit to be protected
4 Connection cable

Performance characteristics

Reference operating conditions

- As per IEC 60770
- Ambient temperature T_A = constant, in the range of: +21 to +33 °C (+70 to 91°F)
- Humidity φ = constant, in the range of: 5 to 80 % RH
- Ambient pressure p_A = constant, in the range of: 860 to 1060 mbar (12.47 to 15.37 psi)
- Position of the measuring cell: constant, in range: FMB50: horizontally ±1°
  FMB51/FMB52/FMB53: vertically ±1°
- Input of LOW SENSOR TRIM and HIGH SENSOR TRIM for lower range value and upper range value
- Span based on zero point
- Material of the process isolating diaphragm: Alloy C276 (2.4819) and Alloy C276 (2.4819) with coating (AuRh or AuPt)
- Measuring cell material (meter body): Alloy C276 (2.4819), 316L (1.4435)
- Filling oil: synthetic oil (FDA)/inert oil
- Supply voltage: 24 V DC ± 3 V DC
- Load with HART: 250 Ω

Influence of orientation

- < 2.3 mbar (0.0345 psi) when using synthetic oil (FDA)
- < 5 mbar (0.075 psi) when using inert oil

Position-dependent zero point shift can be corrected → 29, "General installation instructions" ordering feature.

Calibration position

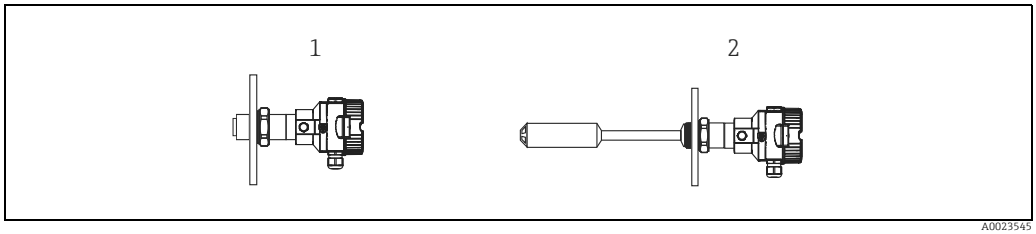

1 FMB50

2 FMB51, FMB52, FMB53

To minimize the effect of the orientation (e.g. in the case of vertical device installation), position offset is preset at the factory.

Resolution

- Current output: 1 µA
- Display: can be set (factory setting: presentation of the maximum accuracy of the transmitter)

Reference accuracy

The reference accuracy comprises the non-linearity according to limit point setting, hysteresis and non-reproducibility as per IEC 60770. The data refer to the calibrated span.

Reference accuracy in % of the calibrated span			
Measuring cell	**TD**	**"Standard" option**[1]	**"Platinum" option**[1]
0.1 bar (1.5 psi)	▪ TD 1:1 to TD 2:1 ▪ TD > 2:1 to TD 4:1	▪ < 0.2 ▪ < 0.1 x TD	▪ < 0.15 ▪ < 0.075 x TD
0.4 bar (6 psi)	▪ TD 1:1 to TD 4:1 ▪ TD > 4:1 to TD 10:1	▪ < 0.2 ▪ < 0.05 x TD	▪ < 0.15 ▪ < 0.0375 x TD
1.2 bar (18 psi)	▪ TD 1:1 to TD 2:1 ▪ TD > 2:1 to TD 12:1	▪ < 0.2 ▪ < 0.1 x TD	▪ < 0.1 ▪ < 0.05 x TD
4 bar (60 psi)	▪ TD 1:1 to TD 4:1 ▪ TD > 4:1 to TD 20:1	▪ < 0.2 ▪ < 0.05 x TD	▪ < 0.1 ▪ < 0.025 x TD
10 bar (150 psi)	▪ TD 1:1 to TD 2.5:1 ▪ TD > 2.5:1 to TD 20:1	▪ < 0.2 ▪ < 0.08 x TD	▪ < 0.1 ▪ < 0.04 x TD

1) Product Configurator, "Reference accuracy" ordering feature

Thermal change in the zero output and the output span

Version	Measuring cell	-10 to +60 °C (+14 to +140°F)	60 to 85 °C (140 to 185°F)	Only FMB50: 85 to 100 °C (185 to 212°F)
		% of the calibrated span		
FMB50 FMB51/52/53 snap-on	0.1 bar (1.5 psi)	< (0.32 + 0.30 x TD)	< (0.34 + 0.40 x TD)	< (0.34 + 0.55 x TD)
FMB51/52/53 welded	0.1 bar (1.5 psi)	< (0.32 + 0.50 x TD)	< (0.34 + 0.60 x TD)	-
FMB50/51/52/53	0.4 bar (6 psi)	< (0.31 + 0.25 x TD)	< (0.32 + 0.30 x TD)	-
	1.2 bar (18 psi), 4 bar (60 psi), 10 bar (150 psi)	< (0.31 + 0.10 x TD)	< (0.32 + 0.15 x TD)	< (0.33 + 0.20 x TD)

Total performance

The "Total performance" specification comprises the non-linearity including hysteresis, non-reproducibility as well as the thermal change in the zero point.

Total performance in % of the URL				
Version	Measuring cell	-10 to +60 °C (+14 to +140°F)	60 to 85 °C (140 to 185°F)	85 to 100 °C (185 to 212°F)
FMB50 FMB51/52/53 snap-on	0.1 bar (1.5 psi)	< 0.35	< 0.45	< 0.6
FMB51/52/53 welded	0.1 bar (1.5 psi)	< 0.8	< 1	< 1.4
FMB50/51/52/53	0.4 bar (6 psi)	< 0.35	< 0.45	< 0.6
	1.2 bar (18 psi), 4 bar (60 psi), 10 bar (150 psi)	< 0.15	< 0.2	< 0.25

Long-term stability

Measuring cell	Long-term stability [%]
0.1 bar (1.4 psi)	▪ < 0.18 of the upper range limit (URL) / year ▪ < 0.45 of the upper range limit (URL) / 5 years
0.4 bar (6 psi) 1.2 bar (18 psi)	▪ < 0.1 of the upper range limit (URL) / year ▪ < 0.25 of the upper range limit (URL) / 5 years
4 bar (60 psi) 10 bar (150 psi)	▪ < 0.05 of the upper range limit (URL) / year ▪ < 0.125 of the upper range limit (URL) / 5 years

Total error

The total error comprises the long-term stability and the total performance:

Measuring cell	% of the URL/year (in the permitted temperature range)
0.1 bar (1.5 psi)	▪ Snap-on: ±0.63 ▪ Welded: ±1.0
0.4 bar (6 psi)	±0.61
1.2 bar (18 psi)	±0.27
4 bar (60 psi), 10 bar (150 psi)	±0.25

Warm-up period

- 4 to 20 mA HART:
  - FMB50 = ≤5 s
  - FMB51/FMB52/FMB53 = ≤8 s
- PROFIBUS PA: ≤8 s
- FOUNDATION Fieldbus: ≤20 s (after a TOTAL-reset ≤45 s)

Installation

General installation instructions

- The position-dependent zero point shift can be corrected:
  - directly at the device via an operating key
  - directly at the device via operating keys on the display
  - via digital communication if the cover is not open

⚠ WARNING

Risk of explosion!
In hazardous areas, comply strictly with the safety instructions when the housing cover is closed and open.

- The local display can be rotated in 90° stages.

FMB50

Level measurement

- Always install the device below the lowest measuring point.
- Do not install the device at the following positions:
  - in the filling curtain
  - in the tank outflow
  - or at a point in the tank that can be affected by pressure pulses from the agitator
- The calibration and functional test can be carried out more easily if you mount the device downstream of a shutoff device.
- Deltapilot M must be included in the insulation for media that can harden when cold.

Pressure measurement in gases

Mount Deltapilot M with shutoff device above the tapping point so that any condensate can flow into the process.

Pressure measurement in steams

- Mount Deltapilot M with siphon above the tapping point.
- Fill the siphon with liquid before commissioning.
  The siphon reduces the temperature to almost the ambient temperature.

Pressure measurement in liquids

Mount Deltapilot M with the shutoff device below or at the same level as the tapping point.

FMB51/FMB52/FMB53

- When mounting rod and cable versions, make sure that the probe head is located at a point as free as possible from flow. To protect the probe from impact resulting from lateral movement, mount the probe in a guide tube (preferably made of plastic) or secure it with a clamping fixture.
- In the case of devices for hazardous areas, comply strictly with the safety instructions when the housing cover is open.
- The length of the extension cable or the probe rod is based on the planned level zero point.
  The height of the protective cap must be taken into consideration when designing the layout of the measuring point. The level zero point (E) corresponds to the position of the process isolating diaphragm.
  Level zero point = E; top of the probe = L.

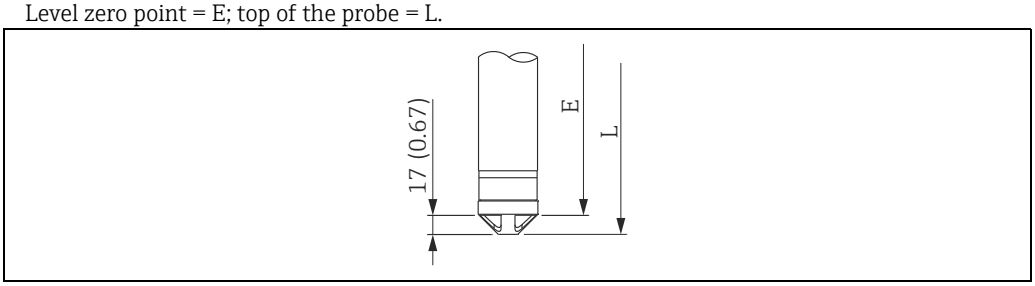

- Suspension clamp (required for FMB53)
  Material: → 56 ff
  Ordering information:
  Order number: 52010869 → 67 ff
  Product Configurator, "Accessory enclosed" ordering feature, option "PO".

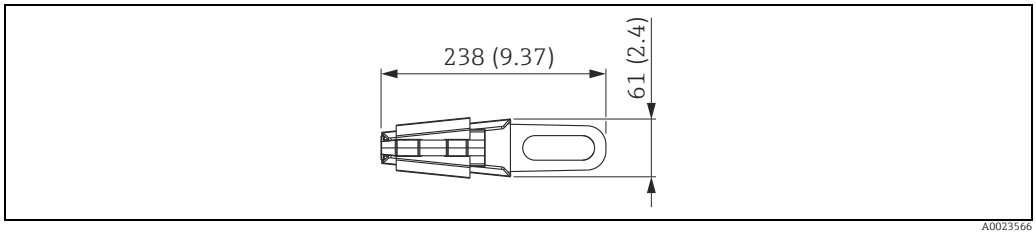

Engineering unit mm (in)

Supplementary installation instructions

Process isolating diaphragm
- Do not clean or touch process isolating diaphragms with hard or pointed objects.
- The process isolating diaphragm in the rod and cable version is protected against mechanical damage by a plastic cap.

Seal
- Deltapilot M devices with a G 1 ½ thread:
  When screwing the device into the tank, the flat seal has to be positioned on the sealing surface of the process connection. To avoid additional strain on the process isolating diaphragm, the thread should never be sealed with hemp or similar materials.
- Deltapilot M devices with NPT threads:
  – Wrap Teflon tape around the thread to seal it.
  – Tighten the device at the hexagonal bolt only. Do not turn the device at the housing.
  – Do not overtighten the thread when screwing in the screw. Max. torque: 20 to 30 Nm (14.75 to 22.13 lbf ft)

Sealing the probe housing
Moisture must not penetrate the housing when mounting the device, establishing the electrical connection and during operation.
- Always firmly tighten the housing cover and the cable entries.
- Lubricant is provided on the O-ring seal in the housing cover and on the thread of the aluminum cover. To ensure that the cover seals tight, any lubricant which has been removed must be replaced. Use silicone grease or graphite paste as the lubricant. Mineral oil-based grease can destroy the O-ring.

PE cable length > 300 m (984 ft)
- Two suspension clamps must be used for PE cables longer than 300 meters (984 ft).

Cable length tolerances
- FMB52
  – Cable length < 5 m (16 ft): up to -35 mm (-1.38 in)
  – Cable length 5…10 m (16…33 ft): up to -75 mm (-2.95 in)
  – Cable length 10…100 m (33…328 ft): up to -100 mm (-3.94 in)
- FMB53
  – Cable length < 5 m (16 ft): up to ±17.5 mm (±0.69 in)
  – Cable length 5…10 m (16…33 ft): up to ±37.5 mm (±1.48 in)
  – Cable length 10…100 m (33…328 ft): up to ±50 mm (±1.97 in)

Rod length tolerances
- FMB51
  – Rod length < 4000 mm (157 in): up to -4 mm (-0.16 in)

Wall and pipe mounting

Endress+Hauser offers a mounting bracket for installing the device on pipes or walls. The mounting bracket is
- included in the delivery for the FMB50/51/52 with a separate housing (available for order via feature 600) and for the FMB53
- available for order as a separate accessory (Part No.: 71102216).

For the dimensions, see → 50.

"Separate housing" version

With the "separate housing" version, you are able to mount the housing with the electronics insert at a distance from the measuring point. This allows for trouble-free measurement:
- Under particularly difficult measuring conditions (at installation locations that are cramped or difficult to access)
- If rapid cleaning of the measuring point is required
- If the measuring point is exposed to vibrations

You can choose between different cable versions:
- PE (2 m (6.6 ft), 5 m (16 ft) and 10 m (33 ft))
- FEP (5 m (16 ft)).

Ordering information:
Product Configurator, "Separate housing" ordering feature
Product Configurator, "Enclosed accessories" ordering feature, option PA

For the dimensions, see → 50.

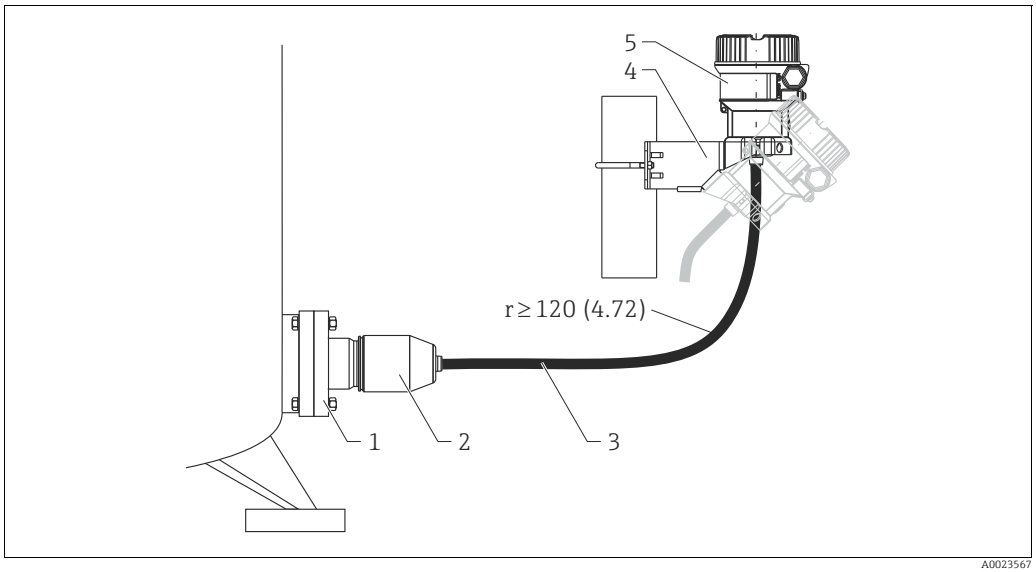

A0023567

Engineering unit mm (in)

In the case of the "separate housing" version, the sensor is delivered with the process connection and cable ready mounted. The housing and a mounting bracket are enclosed as separate units. The cable is provided with a socket at both ends. These sockets are simply connected to the housing and the sensor.

1 Process connection with sensor - see the following section for the degrees of protection
2 Process connection adapter (weight 0.93 kg (2.05 lbs))
3 Cable (weight 0.05 kg/Meter (0.11 lbs/meter)), both ends are fitted with a socket
4 Mounting bracket provided, suitable for pipe and wall mounting (for pipes from 1 1/4" up to 2" diameter)
5 Housing with electronic insert - degrees of protection → 33 ff

Degree of protection for the process connection and sensor with the use of
- FEP cable:
  - IP69[1)]
  - IP66 NEMA 4/6P
  - IP68 (1.83 mH_2O for 24 h) NEMA 4/6P
- PE cable:
  - IP66 NEMA 4/6P
  - IP68 (1.83 mH_2O for 24 h) NEMA 4/6P

Technical data of the PE and FEP cable:
- Minimum bending radius: 120 mm (4.72 in)
- Cable extraction force: max. 450 N (101 lbf)
- Resistance to UV light

Use in hazardous area:
- Intrinsically safe installations (Ex ia/IS)
- FM/CSA IS: for Div.1 installation only

1) Identification of IP protection category according to DIN EN 60529. The earlier designation “IP69K” according to DIN 40050 Part 9 is no longer valid (the standard was withdrawn on November 1, 2012). The tests required for both standards are identical.

Oxygen applications

Oxygen and other gases can react explosively to oils, grease and plastics. As a result, the following are some of the precautions that must be taken:
- All components of the system, such as measuring devices, must be cleaned in accordance with the BAM (DIN 19247) requirements.
- Depending on the materials used, a certain maximum temperature and maximum pressure must not be exceeded for oxygen applications. The maximum temperature T_{max} for oxygen applications is 60 °C (140°F).

The devices suitable for gaseous oxygen applications are listed in the following table with the specification p_{max}.

Order code for devices[1] cleaned for oxygen applications	p_{max} for oxygen applications
FMB50 [2]	▪ Depends on the lowest-rated element, with regard to pressure, of the selected components: over pressure limit (OPL) of the sensor or process connection (1.5 x PN)[3] ▪ Depends on filling oil [4]
FMB51 [2]	▪ Depends on the lowest-rated element, with regard to pressure, of the selected components: over pressure limit (OPL) of the sensor or process connection (1.5 x PN) [3] ▪ Depends on filling oil [4] ▪ Depends on seal material

1) Only device, not accessory or enclosed accessory

2) Product Configurator, "Service" ordering feature, option "HB"

3) → 14, "Measuring range" ordering feature and → 36 ff, "Mechanical construction" ordering feature

4) Oxygen applications possible with FKM seal and inert oil.

PWIS cleaning

Special cleaning of the transmitter to remove paint-wetting substances, for use in paint shops, for instance.
Ordering information: Product Configurator, "Service" ordering feature, option HC
The stability of the materials used must be checked before using them in the medium.
The protective cap of the process isolating diaphragm must be removed if necessary (FMB51/FMB52/FMB53).

Applications with hydrogen

A **gold-plated** metal process isolating diaphragm offers universal protection against hydrogen diffusion, both in gas applications and in applications with aqueous solutions.

Applications with hydrogen in aqueous solutions

A **gold/rhodium-plated** metal process isolating diaphragm (AU/Rh) offers effective protection against hydrogen diffusion.

Special measuring cells for acids, alkalis or sea water (not FMB50)

For acids, alkalis or sea water, Endress+Hauser offers process isolating diaphragms with a gold/platinum coating.

NOTICE

With temperature exposure (up to 85°C(185°F)) there is an additional zero point deviation of 1.1 mbar (0.0165 psi).

Ordering information:
Product Configurator, "Process isolating diaphragm material" ordering feature, option N

Environment

Ambient temperature limits

Version	FMB50	FMB51	FMB52	FMB53
Without LCD display	−40 °C to +85 °C (-40°F to +185°F)		With PE cable: -40 °C to +70 °C (-40°F to +158°F) With FEP cable: −40 °C to +80 °C (-40°F to +176°F)	
With LCD display [1]	−20 °C to +70 °C (-4°F to +158°F)			
With M12 plug , elbowed	-25 °C to +85 °C (-13°F to +185°F)		With PE cable: -25 °C to +70 °C (-13°F to +158°F) With FEP cable: -25 °C to +80 °C (-13°F to +176°F)	
With separate housing (PE and FEP cable)	-20 °C to +60 °C (-4°F to +140°F)			

1) Extended temperature application range (-40 °C to +85 °C (−40°F to +185°F)) with restrictions in optical properties such as display speed and contrast

Storage temperature range

Version	FMB50	FMB51	FMB52	FMB53
Without LCD display	−40 °C to +90 °C (-40°F to +194°F)		With PE cable: -40 °C to +70 °C (-40°F to +158°F) With FEP cable: −40 °C to +80 °C (-40°F to +176°F)	
With LCD display	−40 °C to +85 °C (-40°F to +185°F)			
With M12 plug , elbowed	-25 °C to +90 °C (-13°F to +194°F)		With PE cable: -25 °C to +70 °C (-13°F to +158°F) With FEP cable: -25 °C to +80 °C (-13°F to +176°F)	
With separate housing and FEP cable	-20 °C to +60 °C (-4°F to +140°F)			

Climate class

Class 4K4H (air temperature: −20 to 55 °C (−4 to +131°F), relative humidity: 4 to 100%) satisfied as per DIN EN 60721-3-4 (condensation possible)

Degree of protection

- F31 housing: IP 68 (1.83 mH_2O for 24 h)
- Ordering information:
  Product Configurator, "Electrical connection" ordering feature
- Separate housing → 31

Vibration resistance

Device/accessory	Test standard	Vibration resistance
FMB50, FMB52, FMB53	GL VI-7-2 ▪ Part 7: Guidelines for the Performance of Type Approvals ▪ Chapter 2: Test Requirements for Electrical / Electronic Equipment and Systems	Guaranteed for: 5 to 25 Hz: ±1.6 mm (0.06 in); 25 to 100 Hz: 4 g in all 3 planes
FMB50, FMB52, FMB53 with mounting bracket	IEC 61298-3	Guaranteed for: 10 to 60 Hz: ±0.15 mm (0.01 in); 60 to 500 Hz: 2 g in all 3 planes
FMB51	IEC 60068-2-6	Guaranteed for: 10 to 60 Hz: ±0.075 mm (0.003 in) 60 to 150 Hz 1g in all 3 planes

Electromagnetic compatibility

- Electromagnetic compatibility as per all the relevant requirements of the EN 61326 series and NAMUR Recommendation EMC (NE21).
- Max. deviation during EMC-tests < 0.5% of the span
- All tests were performed with full measurement range (TD 1:1).

Further details can be found in the manufacturer declaration.

Process

Process temperature range

FMB50	FMB51	FMB52	FMB53
−10 °C to +100 °C (+14°F to 212°F) 135 °C (275°F) for 30 min. maximum	−10 °C to +85 °C (+14°F to +185°F)	With PE cable: -10 °C to +70 °C (-14°F to 158°F) With FEP cable: −10 °C to +80 °C (-14°F to 176°F)	
	Min. process temperature when using the KALREZ seal: -3 °C (27°F)		

Lateral load FMB51 (static)

≤30 Nm

Pressure specifications

⚠ WARNING

The maximum pressure for the measuring device depends on the lowest-rated element with regard to pressure → 🗎 14 ff, "Measuring range" ordering feature and → 🗎 36 ff "Mechanical construction" ordering feature

- Only operate the measuring device within the prescribed limits!
- The Pressure Equipment Directive (EC Directive 97/23/EC) uses the abbreviation "PS". The abbreviation "PS" corresponds to the MWP (maximum working pressure) of the measuring device.
- The MWP (maximum working pressure) is specified on the nameplate. This value refers to a reference temperature of +20 °C (68°F), (100°F (38 °C) for ANSI flanges), and may be applied to the device for an unlimited time. Pay attention to pressure-temperature dependencies. Please refer to the following standards for pressure values permitted at higher temperatures
  EN 1092-1: 2001 Tab. 18 [2)]
  ASME B 16.5a – 1998 Tab. 2-2.2 F316
  ASME B 16.5a – 1998 Tab. 2.3.8 N10276
  JIS B 2220.
- OPL (Over Pressure Limit = sensor overload limit):
  The test pressure corresponds to the over pressure limit of the sensor and may only be applied for a limited time period to ensure measurement within specification and in order to avoid permanent damage. In the case of sensor range and process connections where the over pressure limit (OPL) of the process connection is smaller than the nominal value of the sensor, the device is set at the factory, at the very maximum, to the OPL value of the process connection. If you want to use the entire sensor range, select a process connection with a higher OPL value.
- Oxygen applications:
  The values for "p_{max} and T_{max} for oxygen applications" as per → 🗎 32, "Oxygen applications" may not be exceeded.
- Avoid steam hammering!
  Steam hammering can cause zero point drift.
  Recommendation: Residue (such as condensation or drops of water) can remain at the process isolating diaphragm after CIP cleaning and lead to local steam hammering if immediately steam is introduced. In practice, drying the process isolating diaphragm (e.g. by blowing off excess moisture) has proven to be a successful way of avoiding steam hammering.

2) With regard to their stability-temperature property, the materials 1.4435 and 1.4404 are grouped together under 13E0 in EN 1092-1 Tab. 18. The chemical composition of the two materials can be identical.

Mechanical construction

Device height

The device height is calculated from

- the height of the housing and
- the height of the individual process connection.

The individual heights of the components are listed in the following sections. To calculate the device height simply add up the individual heights of the components. Where applicable also take into consideration the installation distance (space that is used to install the device).
You can use the following table for this purpose:

Section	Page	Height
Housing height	→ 36 ff	
Process connections	→ 37 ff	
Installation distance		
Device height		

F31 housing, aluminum

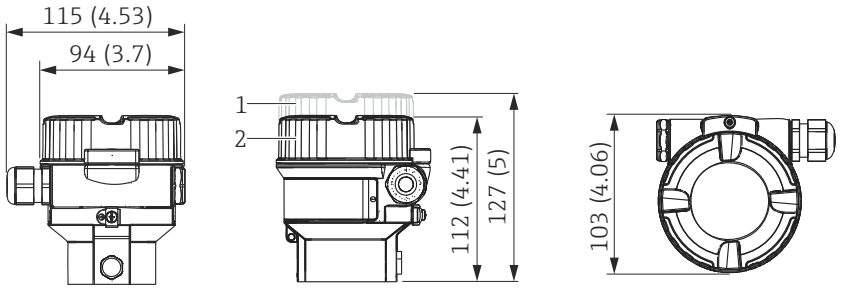

Engineering unit mm (in)

1 Cover with viewing window
2 Cover without viewing window

Front view, left-hand side view, top view

Material	Weight kg (lbs)		Option [1]
	With display	Without display	
Aluminum [2]	1.1 (2.43)	1.0 (2.21)	I
Aluminum with glass viewing window [2]			J

1) Product Configurator, "Housing" ordering feature

2) Degree of protection dependent on cable entry used → 23

F15 housing, stainless steel (hygienic)

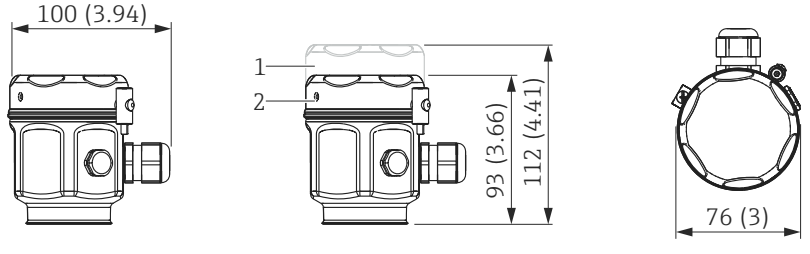

Engineering unit mm (in)

1 Cover with viewing window
2 Cover without viewing window

Front view, left-hand side view, top view

Material	Weight kg (lbs)		Option [1]
	With display	Without display	
Stainless steel [2]	1.1 (2.43)	1.0 (2.21)	Q
Stainless steel with glass viewing window [2]			R
Stainless steel with plastic viewing window [2]			S

1) Product Configurator, "Housing" ordering feature

2) Degree of protection dependent on cable entry used → 🖹 23

Diameter of the process isolating diaphragm

35.8 mm (1.41 in)

Process connections FMB50, FMB51, FMB52

ISO 228 G threaded connection

A

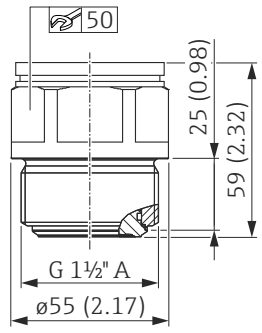

B

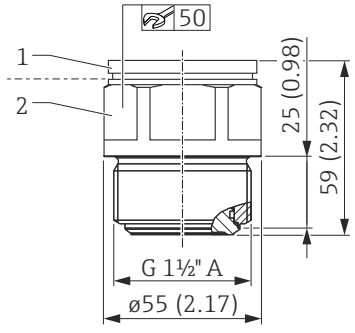

Engineering unit mm (in)

Item	Designation	Material	Weight kg (lbs)	Option [1]
A	Thread ISO 228 G 1 ½" A	AISI 316L (1.4435)	0.8 (1.76)	GGJ
B	Thread ISO 228 G 1 ½" A	▪ 1: top section AISI 316L (1.4435) ▪ 2: bottom section Alloy C276 (2.4819)		GGC

1) Product Configurator, “Process connection” section

Threaded connection NPT

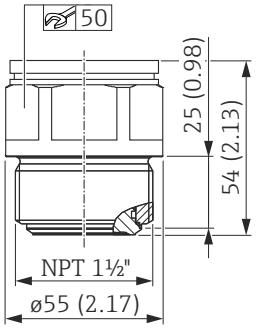

Engineering unit mm (in)

Designation	Material	Weight kg (lbs)	Option [1]
Thread ANSI 1 ½" MNPT	AISI 316L (1.4435)	0.8 (1.76)	RGJ

1) Product Configurator, “Process connection” section

Process connections FMB50, FMB51, FMB52

EN/DIN flanges, connection dimensions as per EN 1092-1/DIN 2527

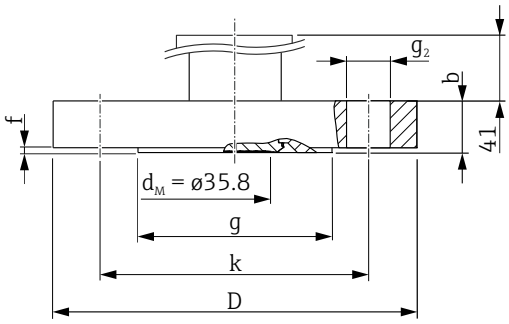

Engineering unit mm

Flange [1]								Boltholes			Weight	Option [2]
Material [3]	Nominal diameter	Nominal pressure	Shape [4]	D	Thickness b	Diameter of raised face g	Height of raised face f	Quantity	g_2	Hole circle k		
				[mm]	[mm]	[mm]	[mm]		[mm]	[mm]	[kg (lbs)]	
AISI 316L	DN 40	PN 10/16	B1 (C)	150	18	88	2	4	18	110	3.05 (6.72)	CEJ
AISI 316L	DN 50	PN 10/16	B1 (C)	165	18	102	2	4	18	125	3.75 (8.27)	CFJ
AISI 316L	DN 80	PN 10/16	B1 (C)	200	20	138	2	8	18	160	5.55 (12.24)	CGJ
AISI 316L	DN 100	PN 10/16	B1 (C)	220	20	158	2	8	18	180	6.75 (14.88)	CHJ

1) The roughness of the surface in contact with the medium, including the sealing surface of the flanges, is < R_a 0.8 µm (31.5 µin). Lower surface roughness available on request.

2) Product Configurator, “Process connection” section

3) Endress+Hauser supplies DIN/EN stainless steel flanges as per AISI 316L (DIN/ EN material number 1.4404 or 14435). With regard to their stability-temperature property, the materials 1.4404 and 1.4435 are grouped together under 13E0 in EN 1092-1: 2001 Tab.18. The chemical composition of the two materials can be identical.

4) Designation as per DIN 2526 in brackets

Process connections FMB50, FMB51, FMB52 - continued

ASME flanges, connection dimensions as per ANSI B 16.5, raised face RF

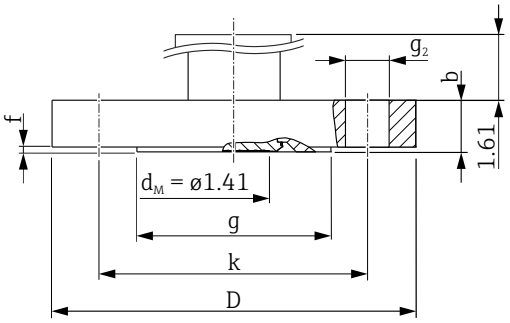

Engineering unit in

Flange [1]							Boltholes			Weight	Option [2]
Material [3]	Nominal diameter	Class	D	Thickness b	Diameter of raised face g	Height of raised face f	Quantity	Diameter g_2	Hole circle k		
	[in]	[lb./sq in]	[in]	[in]	[in]	[in]		[in]	[in]	[kg (lbs)]	
AISI 316/316L	1 ½	150	5	0.69	2.88	0.06	4	0.62	3.88	2.55 (5.62)	AEJ (not FMB51/52)
AISI 316/316L	2	150	6	0.75	3.62	0.06	4	0.75	4.75	3.45 (7.61)	AFJ
AISI 316/316L	3	150	7.5	0.94	5	0.06	4	0.75	6	6.15 (13.56)	AGJ
AISI 316/316L	4	150	9	0.94	6.19	0.06	8	0.75	7.5	8.25 (18.19)	AHJ

1) The roughness of the surface in contact with the medium, including the sealing surface of the flanges, is < R_a 0.8 µm (31.5 µin). Lower surface roughness available on request.

2) Product Configurator, “Process connection” section

3) Combination of AISI 316 for required pressure resistance and AISI 316L for required chemical resistance (dual rated)

Process connections FMB50, FMB51, FMB52 - continued

JIS flanges, connection dimensions as per JIS B 2220 BL, raised face RF

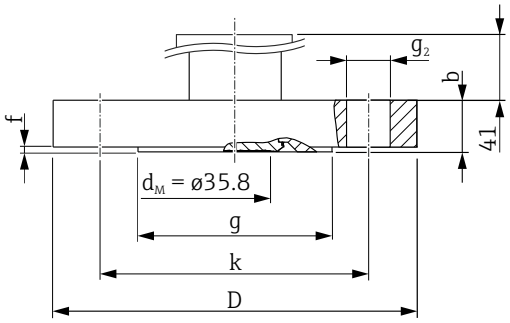

Engineering unit mm

Flange [1]							Boltholes			Weight	Option [2]
Material	Nominal diameter	Nominal pressure	D	Thickness b	Diameter of raised face g	Height of raised face f	Quantity	Diameter g_2	Hole circle k		
			[mm]	[mm]	[mm]	[mm]		[mm]	[mm]	[kg (lbs)]	
AISI 316L (1.4435)	40 A	10 K	140	16	81	2	4	19	105	2.55 (5.62)	KEJ
	50 A	10 K	155	16	96	2	4	19	120	2.95 (6.50)	KFJ
	80 A	10 K	185	18	126	2	8	19	150	4.25 (9.37)	KGJ
	100 A	10 K	210	18	151	2	8	19	175	5.35 (11.79)	KHJ

1) The roughness of the surface in contact with the medium, including the sealing surface of the flanges (all standards), is < R_a 0.8 µm (31.5 µin). Lower surface roughness available on request.

2) Product Configurator, “Process connection” section

Process connections FMB50 - continued **Universal adapter**

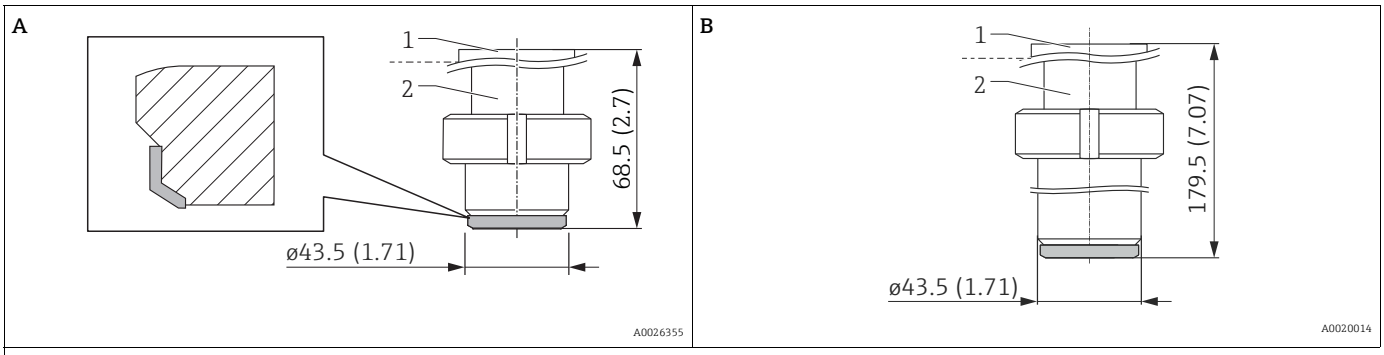

Engineering unit mm (in)

Item[1)]	Designation	Material	Approval	Weight kg (lbs)	Option [2)]
A	Universal process adapter incl. silicone molded seal (spare part no.: 52023572) FDA 21CFR177.2600/USP Class VI-70C	▪ 1: top section AISI 316L (1.4404) ▪ 2: bottom section AISI 316L (1.4435)	EHEDG, 3A	0.8 (1.76)	UPJ [3)]
	Universal process adapter incl. EPDM molded seal (order no.: 71100719) EPDM-70, FDA, USP Class VI; (5 pieces)		EHEDG, 3A		UNJ [3)]
B	Universal process adapter, 6 inch extension incl. silicone molded seal (spare part no.: 52023572) FDA 21CFR177.2600/USP Class VI-70C		EHEDG, 3A	1.7 (3.75)	UQJ [3)]
	Universal process adapter, 6 inch extension incl. EPDM molded seal (order no.: 71100719) EPDM-70, FDA, USP Class VI; (5 pieces)		EHEDG, 3A		UOJ [3)]

1) Surface roughness of the surfaces in contact with the medium R_a ≤0.76 µm (30 µin) as standard. Surface roughness R_a<0.38 µm electropolished (wetted) Ordering information: Product Configurator, "Service" ordering feature, option "HK".

2) Product Configurator, “Process connection” section

3) Endress+Hauser supplies these slotted nuts in stainless steel AISI 304 (1.4301) or in AISI 304L (1.4307).

Anderson process adapter

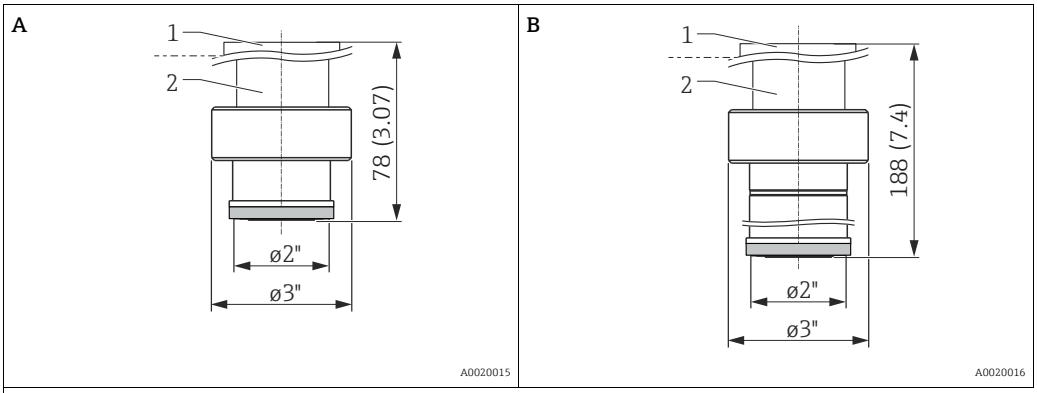

Engineering unit mm (in)

Item[1)]	Designation	Material	Approval	Weight kg (lbs)	Option [2)]
A	Short Anderson process adapter, 2-3/16", 316L, incl. silicone molded seal FDA 21CFR177.2600	▪ 1: top section AISI 316L (1.4404) ▪ 2: bottom section AISI 316L (1.4435) ▪ Slotted nut AISI 316L (1.4404)	3A	1.5 (3.31)	USJ
B	Long Anderson process adapter, 6-1/2", 316L, incl. silicone molded seal FDA 21CFR177.2600		3A	2.9 (6.39)	UTJ

1) Surface roughness of the surfaces in contact with the medium R_a ≤0.76 µm (30 µin) as standard. Lower surface roughness available on request.

2) Product Configurator, “Process connection” section

Process connections FMB50 - continued **Hygienic connections**

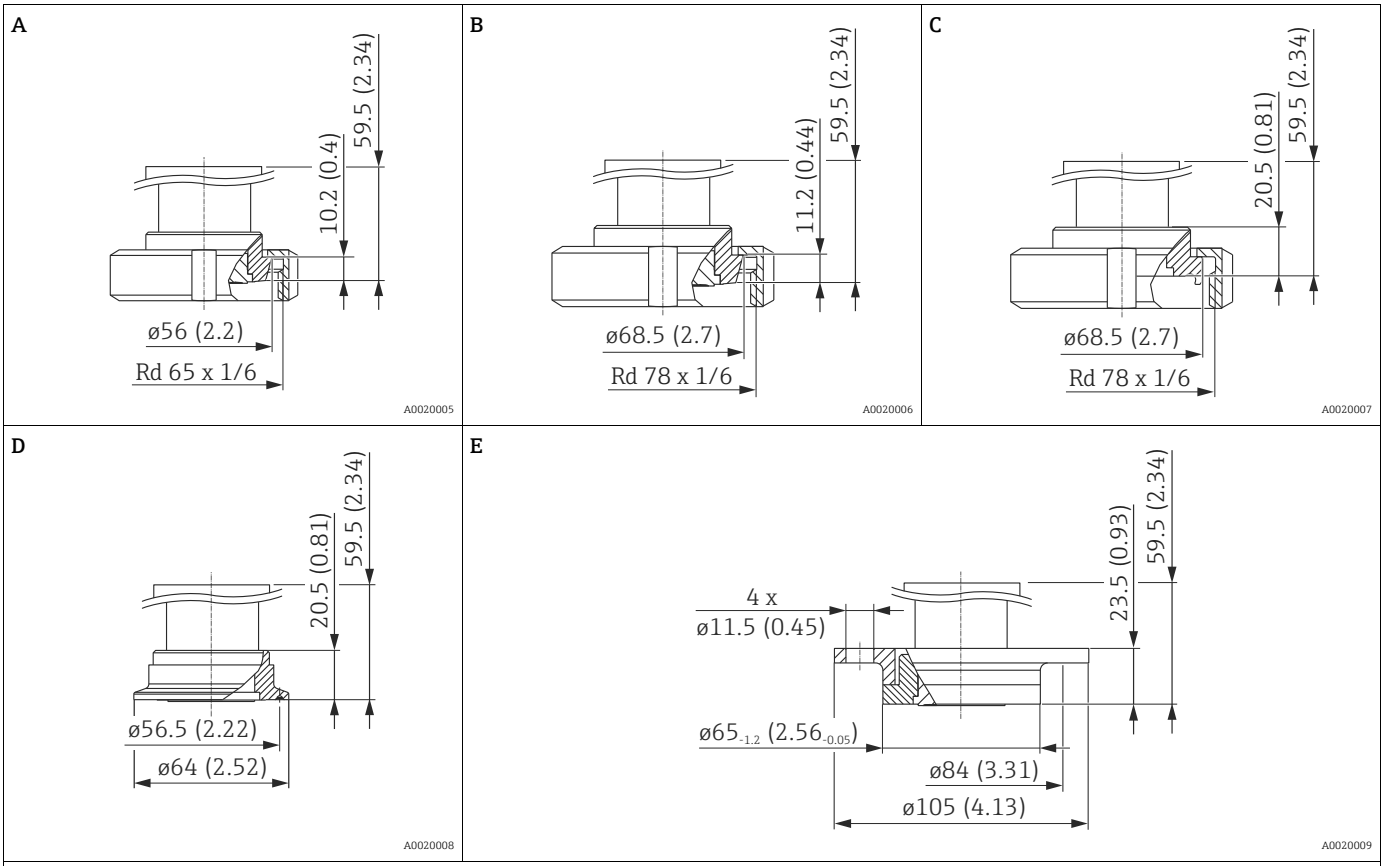

Engineering unit mm (in)

Item[1)]	Designation	Material	Approval	Weight kg (lbs)	Option [2)]
A	DIN 11851 DN 40 PN 25	AISI 316L (1.4435)	EHEDG, 3A	0.7 (1.54)	MZJ[3)]
B	DIN 11851 DN 50 PN 25		EHEDG, 3A	0.9 (1.98)	MRJ [3)]
C	DIN11864-1 A DN50 PN16 pipe DIN11866-A, slotted nut, 316L		EHEDG, 3A	1 (2.21)	NDJ [3)]
D	Tri-Clamp ISO 2852 DN 40 – DN 51 (2"), DIN 32676 DN 50		EHEDG, 3A	0.7 (1.54)	TDJ [3)]
E	DRD DN 50 (65 mm) PN 25, slotted nut AISI 304 (1.4301)		-	1.1 (1.98)	TIJ

1) Surface roughness of the surfaces in contact with the medium R_a ≤0.76 µm (30 µin) as standard. Lower surface roughness available on request.

2) Product Configurator, "Process connection" section

3) Endress+Hauser supplies these slotted nuts in stainless steel AISI 304 (DIN/EN material number 1.4301) or in AISI 304L (DIN/EN material number 1.4307).

F

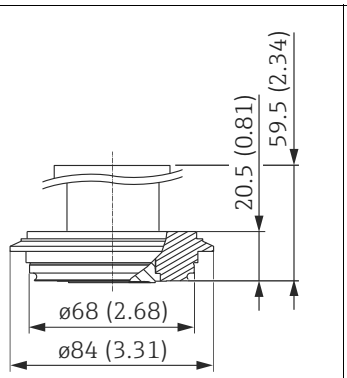

Engineering unit mm (in)

G

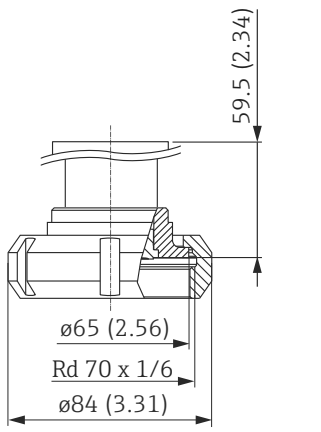

Engineering unit mm (in)

H

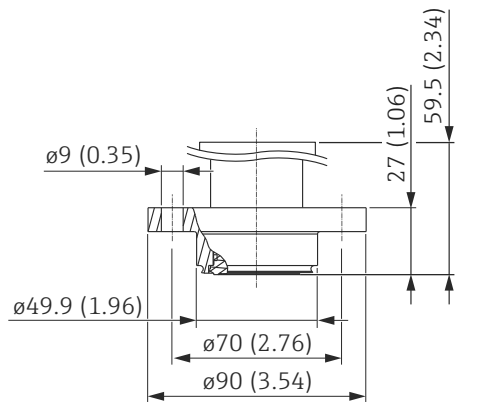

Engineering unit mm (in)

Item[1)]	Designation	Material	Approval	Weight kg (lbs)	Option [2)]
F	Varivent Type N for pipes 40 – 162, PN 40	AISI 316L (1.4435)	EHEDG, 3A	1 (2.21)	TRJ
G	SMS 2", PN 25		EHEDG, 3A	0.7 (1.54)	TXJ[3)]
H	NEUMO, D50, PN 16, 316L		3A	0.8 (1.76)	S4J

1) Surface roughness of the surfaces in contact with the medium R_a ≤0.76 µm (30 µin) as standard. Lower surface roughness available on request.

2) Product Configurator, “Process connection” section

3) Endress+Hauser supplies these slotted nuts in stainless steel AISI 304 (DIN/EN material number 1.4301) or in AISI 304L (DIN/EN material number 1.4307).

Process connections FMB51 (rod version)

Threaded connection ISO 228 and NPT

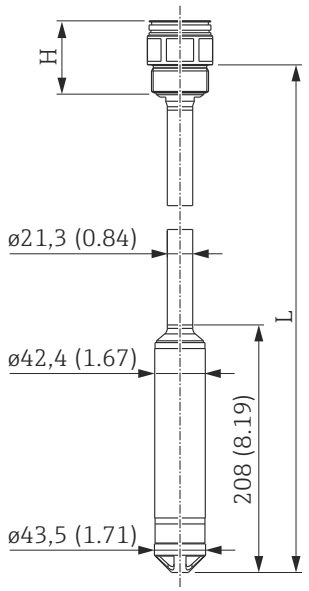

H *For dimensions of process connections → 36 ff*
L *Probe length L = 0.4 m to 4 m (1.3 ft to 13 ft) - see Product Configurator, "Probe connection" section*

Engineering unit mm (in)

Process connection incl. sensor	Weight
Housing weight	→ 36 ff
Process connection weight	→ 37 ff
Pipe incl. cable	0.77 kg/m (1.70 lbs/3.3 ft)
Threaded connection incl. measuring cell tube and sensor	1.65 kg (3.64 lbs)
Flange connection incl. measuring cell tube and sensor, without a flange	-
Total weight of device	

EN/DIN, ANSI and JIS flanges

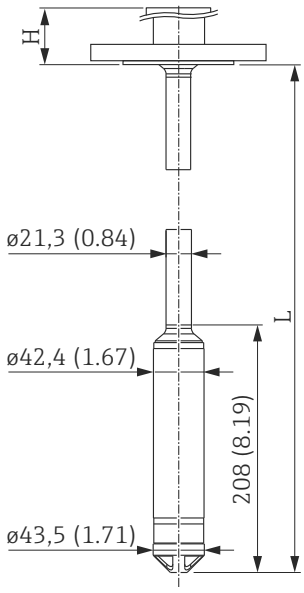

H *For dimensions of process connections → 36 ff*
L *Probe length L = 0.4 m to 4 m (1.3 ft to 13 ft) - see Product Configurator, "Probe connection" section*

Engineering unit mm (in)

Process connection incl. sensor	Weight
Housing weight	→ 36 ff
Process connection weight	→ 37 ff
Pipe incl. cable	0.77 kg/m (1.70 lbs/3.3 ft)
Threaded connection incl. measuring cell tube and sensor	-
Flange connection incl. measuring cell tube and sensor, without a flange	1.3 kg (2.87 lbs)
Total weight of device	

Process connections FMB52 (cable version)

Threaded connection ISO 228 and NPT

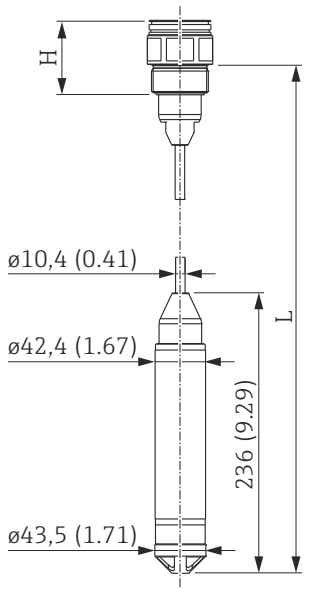

H *For dimensions of process connections → 36 ff*
L *Probe length L = 0.5 to 400 m (1.6 to 1312 ft) - see Product Configurator, "Probe connection" section*

Engineering unit mm (in)

Process connection incl. sensor	Weight
Housing weight	→ 36 ff
Process connection weight	→ 37 ff
PE cable	0.13 kg/m (0.28 lbs/3.3 ft)
FEP cable	0.18 kg/m (0.40 lbs/3.3 ft)
Threaded connection incl. measuring cell tube and sensor	1.65 kg (3.64 lbs)
Flange connection incl. measuring cell tube and sensor, without a flange	-
Total weight of device	

EN/DIN, ANSI and JIS flanges

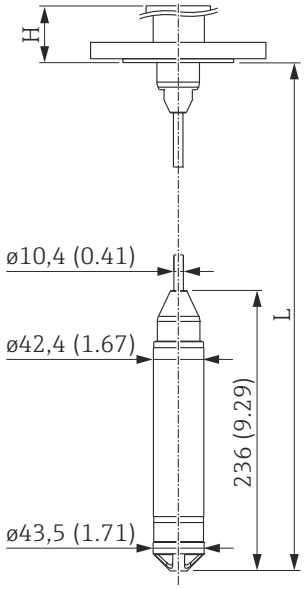

H *For dimensions of process connections → 36 ff*
L *Probe length L = 0.5 to 400 m (1.6 to 1312 ft) - see Product Configurator, "Probe connection" section*

Engineering unit mm (in)

Process connection incl. sensor	Weight
Housing weight	→ 36 ff
Process connection weight	→ 37 ff
PE cable	0.13 kg/m (0.28 lbs/3.3 ft)
FEP cable	0.18 kg/m (0.40 lbs/3.3 ft)
Flange connection incl. measuring cell tube and sensor, without a flange	1.3 kg (2.87 lbs)
Total weight of device	

Dimensions of FMB53 with F31 housing, suspension clamp and mounting bracket

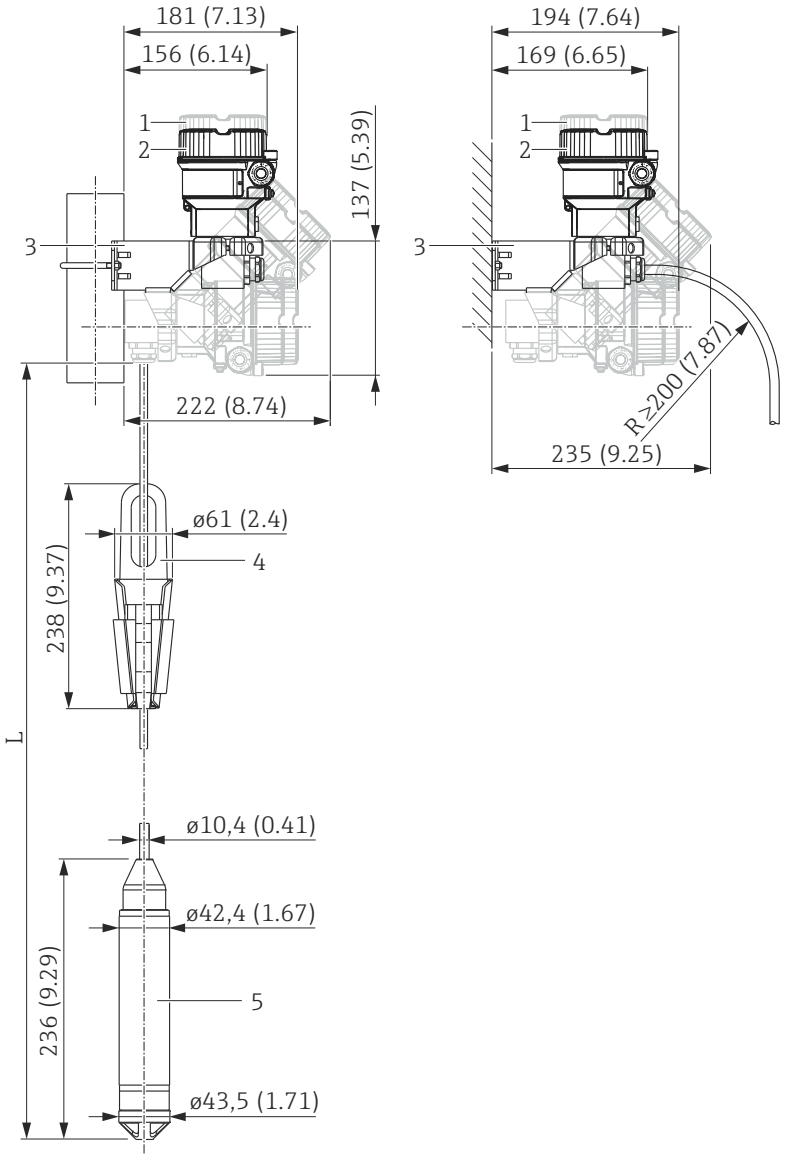

FMB53 with suspension clamp and mounting bracket (mounting bracket without marine approval)

1 Dimensions for housing covers with a viewing window.
2 Housing covers without a viewing window are approx. 15 mm (0.59 in) lower.
3 Mounting bracket for pipe and wall mounting (for pipes from 1 ¼" up to 2" diameter)
4 Suspension clamp
5 Measuring cell tube
L Probe length = 0.5 to 400 m (1.6 to 1312 ft) - see Product Configurator, "Probe connection" section

Engineering unit mm (in)

Process connection incl. sensor	Weight
Housing weight	→ 36 ff
PE cable (cable length > 120 m (394 ft) = Delivery on cable reel)	0.13 kg/m (0.28 lbs/3.3 ft)
FEP cable (cable length > 120 m (394 ft) = Delivery on cable reel)	0.18 kg/m (0.40 lbs/3.3 ft)
Mounting bracket	0.2 kg (0.44 lbs)
Pipe bend incl. cable entry	0.65 kg (1.43 lbs)
Suspension clamp	0.4 kg (0.88 lbs)
Measuring cell tube incl. sensor	1.0 kg (2.21 lbs)
Total weight of device	

Dimensions of FMB53 with F15 housing, suspension clamp and mounting bracket

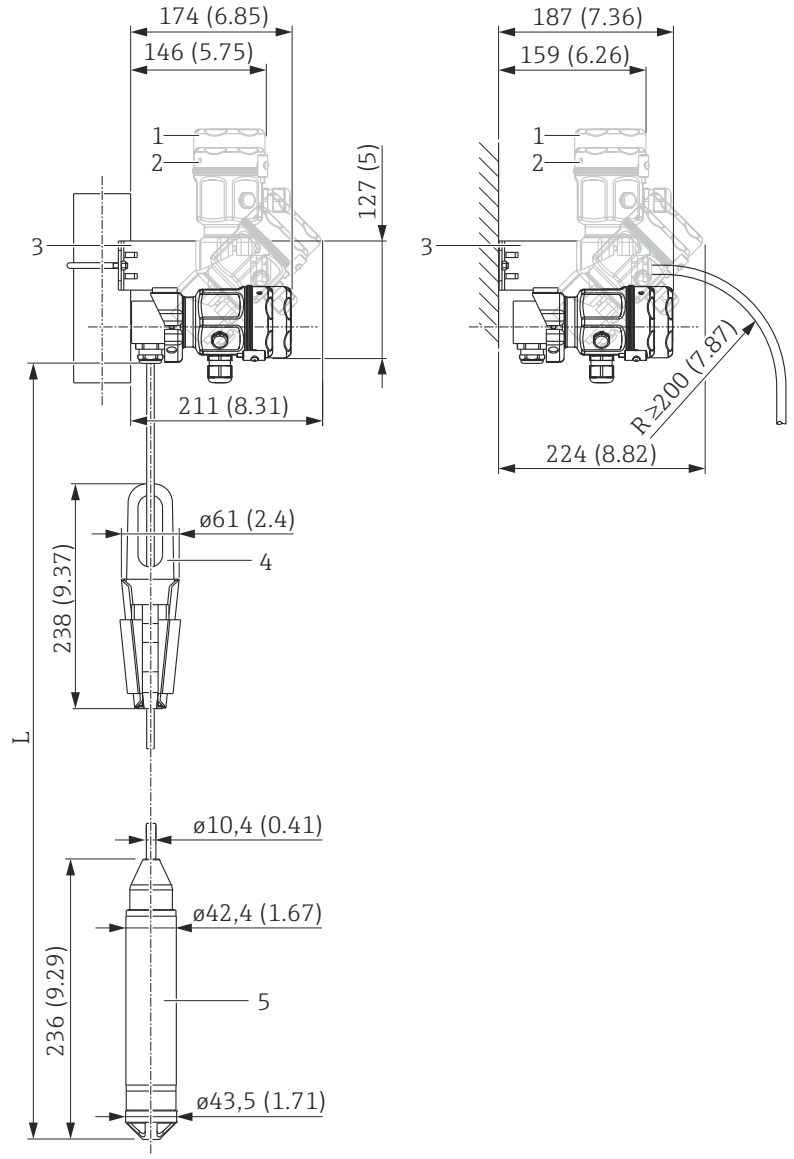

FMB53 with suspension clamp and mounting bracket (mounting bracket without marine approval)

1 Dimensions for housing covers with a viewing window.
2 Housing covers without a viewing window are approx. 15 mm (0.59 in) lower.
3 Mounting bracket for pipe and wall mounting (for pipes from 1 ¼" up to 2" diameter)
4 Suspension clamp
5 Measuring cell tube
L Probe length = 0.5 to 400 m (1.6 to 1312 ft) - see Product Configurator, "Probe connection" section

Engineering unit mm (in)

Process connection incl. sensor	Weight
Housing weight	→ 🖹 36 ff
PE cable (cable length > 120 m (394 ft) = Delivery on cable reel)	0.13 kg/m (0.28 lbs/3.3 ft)
FEP cable (cable length > 120 m (394 ft) = Delivery on cable reel)	0.18 kg/m (0.40 lbs/3.3 ft)
Mounting bracket	0.2 kg (0.44 lbs)
Pipe bend incl. cable entry	0.65 kg (1.43 lbs)
Suspension clamp	0.4 kg (0.88 lbs)
Measuring cell tube incl. sensor	1.0 kg (2.21 lbs)
Total weight of device	

Wall and pipe mounting with "Separate housing" version

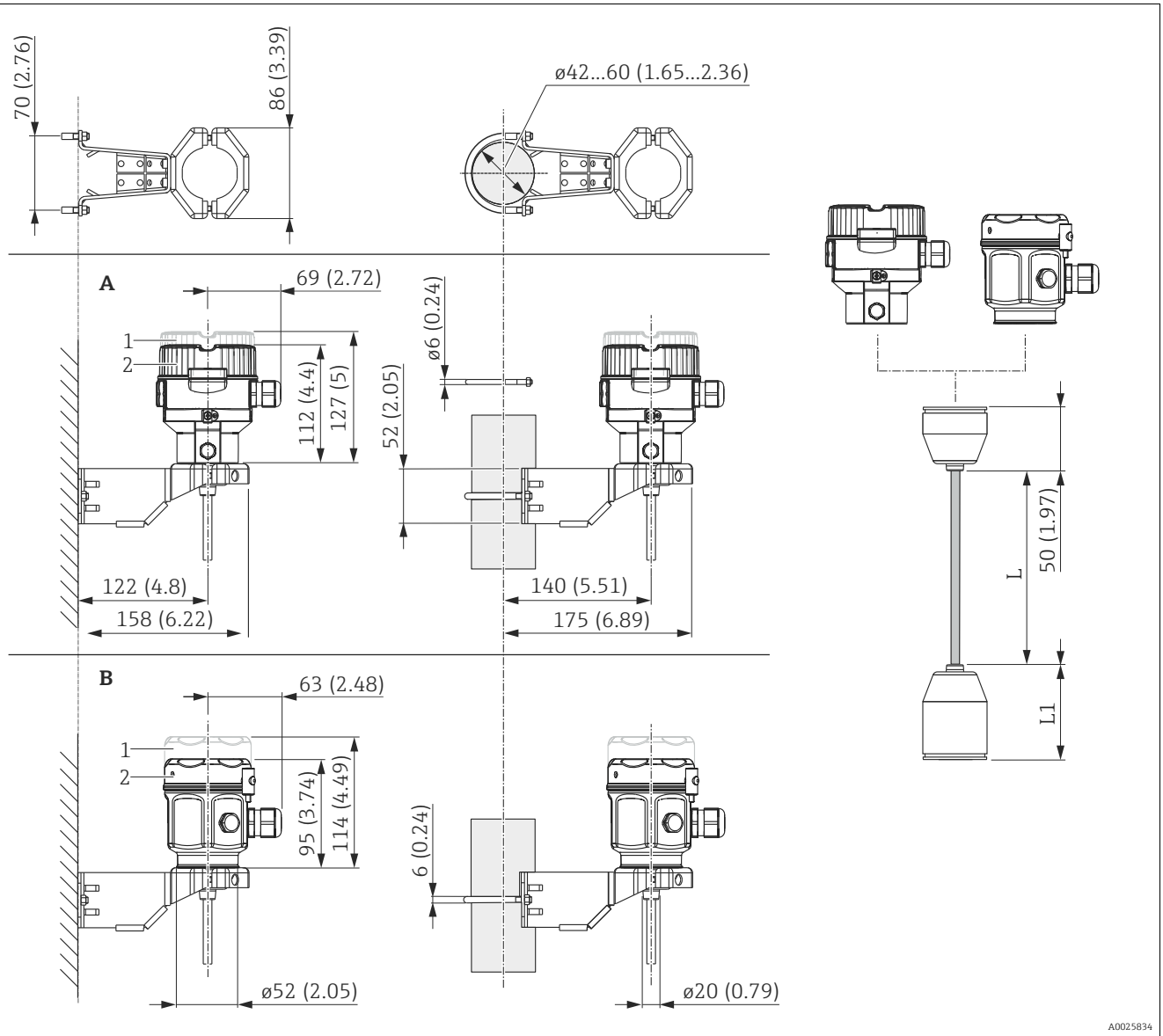

1 Housing cover with viewing window.
2 Housing cover without viewing window
L PE cable 2 m (6.6 ft), 5 m (16 ft) or 10 m (33 ft). FEP cable 5 m (16 ft)
L1 FMB50 = 91 mm (3.58 in); FMB51 and FMB52 = 81 mm (3.19 in)

Engineering unit mm (in)

Item	Designation	Weight		Option [1]
		Housing (F31 or F15)	Mounting bracket	
A	Dimensions with F31 housing	→ 36 ff	0.5 kg (1.10)	U
B	Dimensions with F15 housing			

1) Product Configurator, "Separate housing" ordering feature

Also available for order as a separate accessory: part number 71102216

FMB50: Reduction in installation height

If the separate housing is used, the mounting height of the process connection is reduced compared to the dimensions of the standard version.

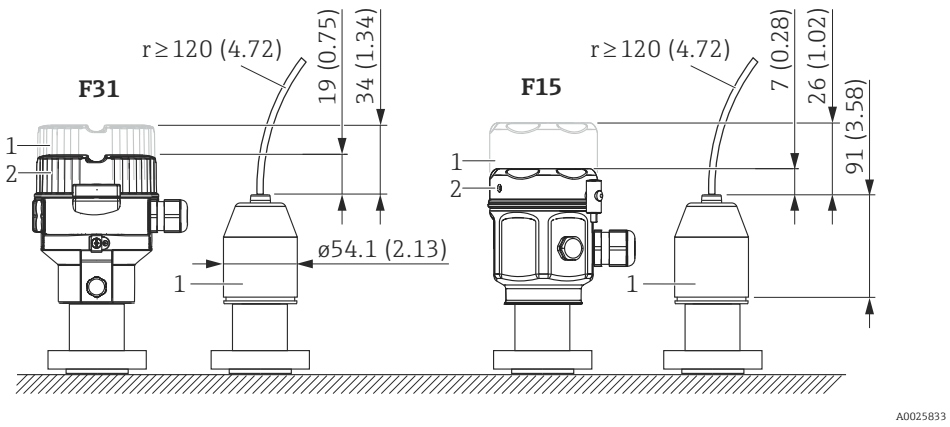

1 Process connection adapter

Engineering unit mm (in)

FMB51, FMB52: Reduction in installation height

If the separate housing is used, the mounting height of the process connection is reduced compared to the dimensions of the standard version.

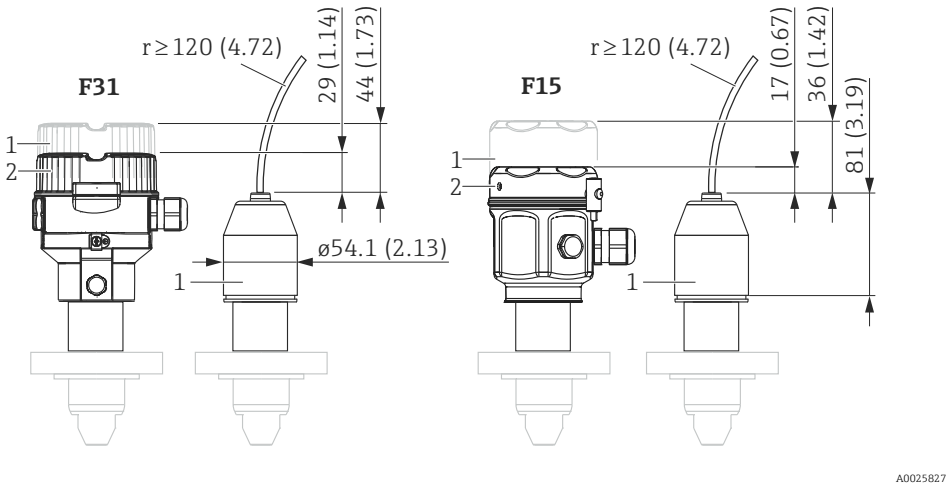

1 Process connection adapter

Engineering unit mm (in)

Example for a "Separate housing" version

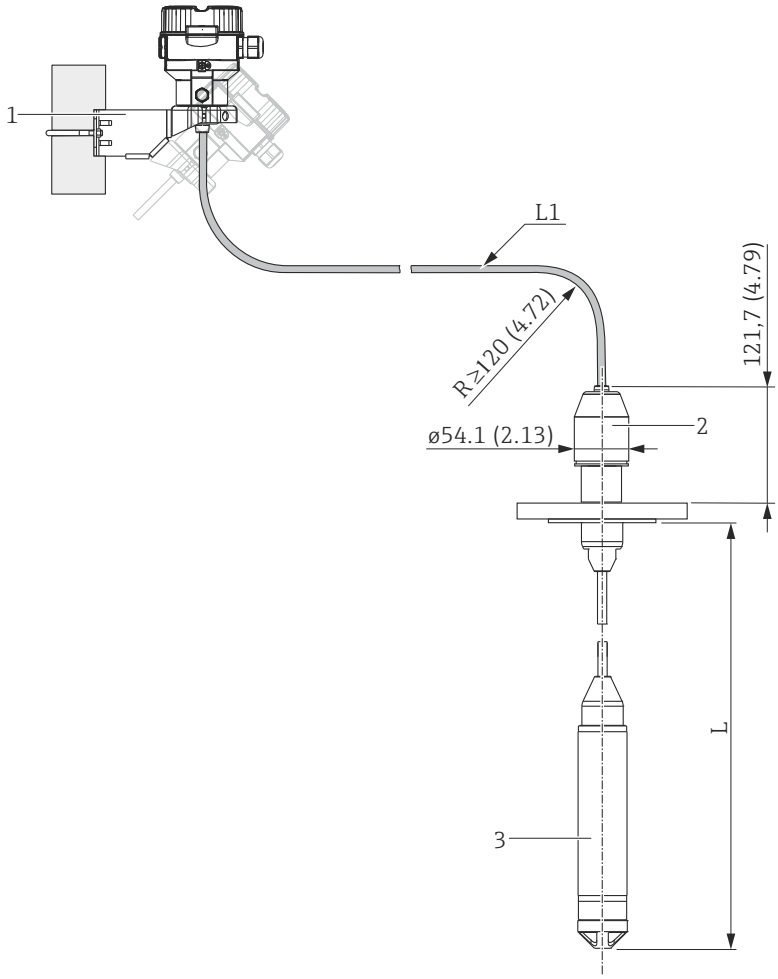

Connecting cable with process connection adapter and mounting bracket, here shown with an FMB52

1 Mounting bracket for pipe and wall mounting (for pipes from 1 1/4" up to 2" diameter)
2 Process connection adapter
3 Measuring cell tube
L1 PE cable = 2 m (6.6 ft), 5m (16 ft) or 10 m (33 ft)
FEP cable = 5 m (16 ft)
L Probe length = 0.5 to 400 m (1.6 to 1312 ft)

Engineering unit mm (in)

Process connection incl. sensor	Weight
Separate housing for FMB50	Weight of housing (→ 36 ff) + 0.5 kg (1.10 lbs)
Separate housing for FMB51 and FMB52	Weight of housing (→ 36 ff) + 0.65 kg (1.43 lbs)
Process connection adapter	0.4 kg (0.88 lbs)
Mounting bracket	0.2 kg (0.44 lbs)
Pipe bend incl. cable entry	0.65 kg (1.43 lbs)
PE cable 2 m (6.6 ft)	0.16 kg (0.35 lbs)
PE cable 5 m (16 ft)	0.32 kg (0.71 lbs)
Total weight of device	

Ordering information for FMB50, FMB51, FMB52: Product Configurator, "Separate housing" ordering feature

Materials not in contact with process

F31 housing

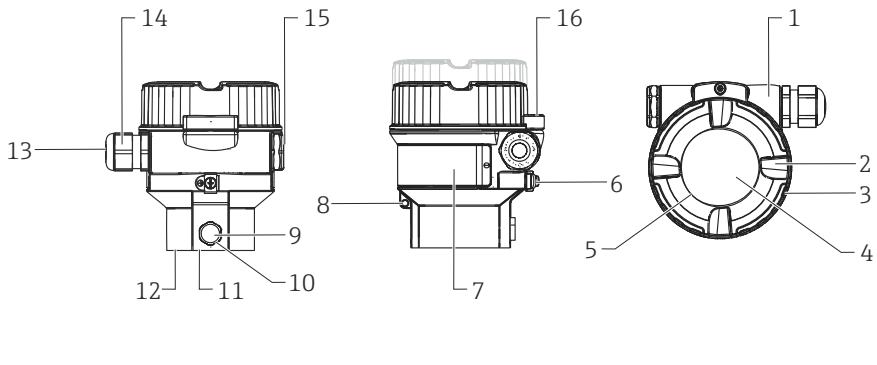

Front view, left-hand side view, top view

Item number	Component part	Material
1	F31 housing, RAL 5012 (blue)	Die-cast aluminum with protective powder-coating on polyester base
2	Cover, RAL 7035 (gray)	Die-cast aluminum with protective powder-coating on polyester base
3	Cover seal	EPDM
4	Sight glass	Mineral glass
5	Sight glass seal	Silicone (VMQ)
6	External ground terminal	AISI 304 (1.4301)
7	Nameplates	Plastic film
8	Attachment for tie-on label	AISI 304 (1.4301)/ AISI 316 (1.4401)
9	Pressure compensation filter	AISI 316L (1.4404) and PBT-FR
10	Pressure compensation filter, O-ring	VMQ or EPDM
11	Sealing ring	EPDM
12	Snap ring	PC Plastic
13	Seal of cable gland and blind plug	EPDM/NBR
14	Cable gland	Polyamide (PA), for dust ignition-proof: CuZn nickel-plated
15	Blind plug	PBT-GF30 FR
		for dust ignition-proof, Ex d, FM XP and CSA XP: AISI 316L (1.4435)
16	Cover clamp	Clamp AISI 316L (1.4435), screw A4

F15 housing

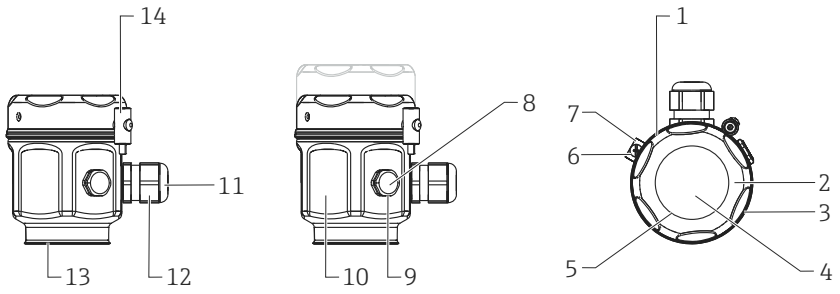

Front view, left-hand side view, top view

Item number	Component part	Material
1	F15 housing	AISI 316L (1.4404)
2	Cover	
3	Cover seal	Silicone with PTFE coating
4	Sight glass for non-hazardous area, ATEX Ex ia, NEPSI Zone 0/1 Ex ia, IECEx Zone 0/1 Ex ia, FM NI, FM IS, CSA IS	Polycarbonate (PC)
4	Sight glass for ATEX 1/2 D, ATEX 1/3 D, ATEX 1 GD, ATEX 1/2 GD, ATEX 3 G, FM DIP, CSA dust ignition-proof	Mineral glass
5	Sight glass seal	Silicone (VMQ)
6	External ground terminal	AISI 304 (1.4301)
7	Attachment for tie-on label	AISI 304 (1.4301)/ AISI 316 (1.4401)
8	Pressure compensation filter	AISI 316L (1.4404) and PBT-FR
9	Pressure compensation filter, O-ring	VMQ or EPDM
10	Nameplates	lasered
11	Cable gland	Polyamide (PA), for dust ignition-proof: CuZn nickel-plated
12	Seal of cable gland and blind plug	NBR/Silicone/EPDM
13	Sealing ring	EPDM
14	Screw	A4-50

Connecting parts

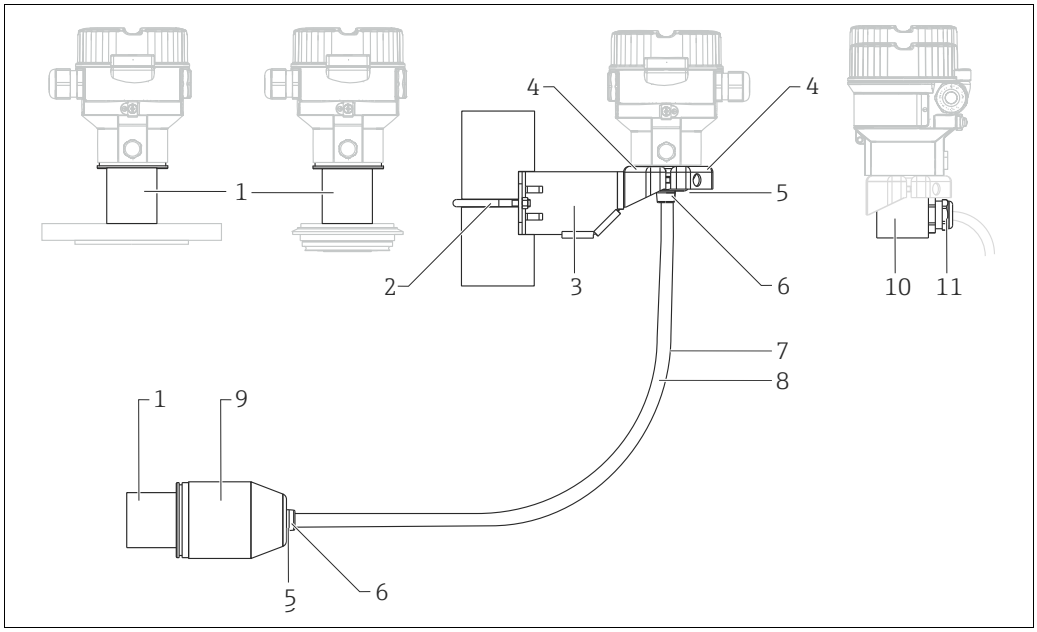

A0023617

Item number	Component part	Material
1	Connection between the housing and process connection	AISI 316L (1.4404)
2	Mounting bracket	Bracket AISI 316L (1.4404)
3		Screw and nuts A4-70
4		Half-shells: AISI 316L (1.4404)
5	Seal for cable from Separate housing	FKM, EPDM
6	Gland for cable from separate housing: Screws:	AISI 316L (1.4404) A2
7	PE cable for separate housing	Abrasion-proof cable with strain-relief Dynema members; shielded using aluminum-coated film; insulated with polyethylene (PE-LD), black; copper wires, twisted, UV-resistant
8	FEP cable for separate housing	Abrasion-proof cable; shielded using galvanized steel wire netting; insulated with fluorinated ethylene propylene (FEP), black; copper wires, twisted, UV-resistant
9	Process connection adapter for separate housing	AISI 316L (1.4404)
10	Housing adapter	FMB50, FMB51, FMB52: AISI 316L (1.4404) FMB53: AISI 304 (1.4301)
11	Cable gland: Sealing insert: O-ring:	CuZn nickel-plated TPE-V NBR

Fill fluid

Designation	Option [1]
Inert oil	2
Synthetic oil polyalphaolefin FDA 21 CFR 178.3570, NSF H1	3

1) Product Configurator, “Fill fluid” section

Materials in contact with the process

The wetted device components are listed in the "Mechanical construction" (→ 36 ff) and "Ordering information" (→ 67 ff) sections.

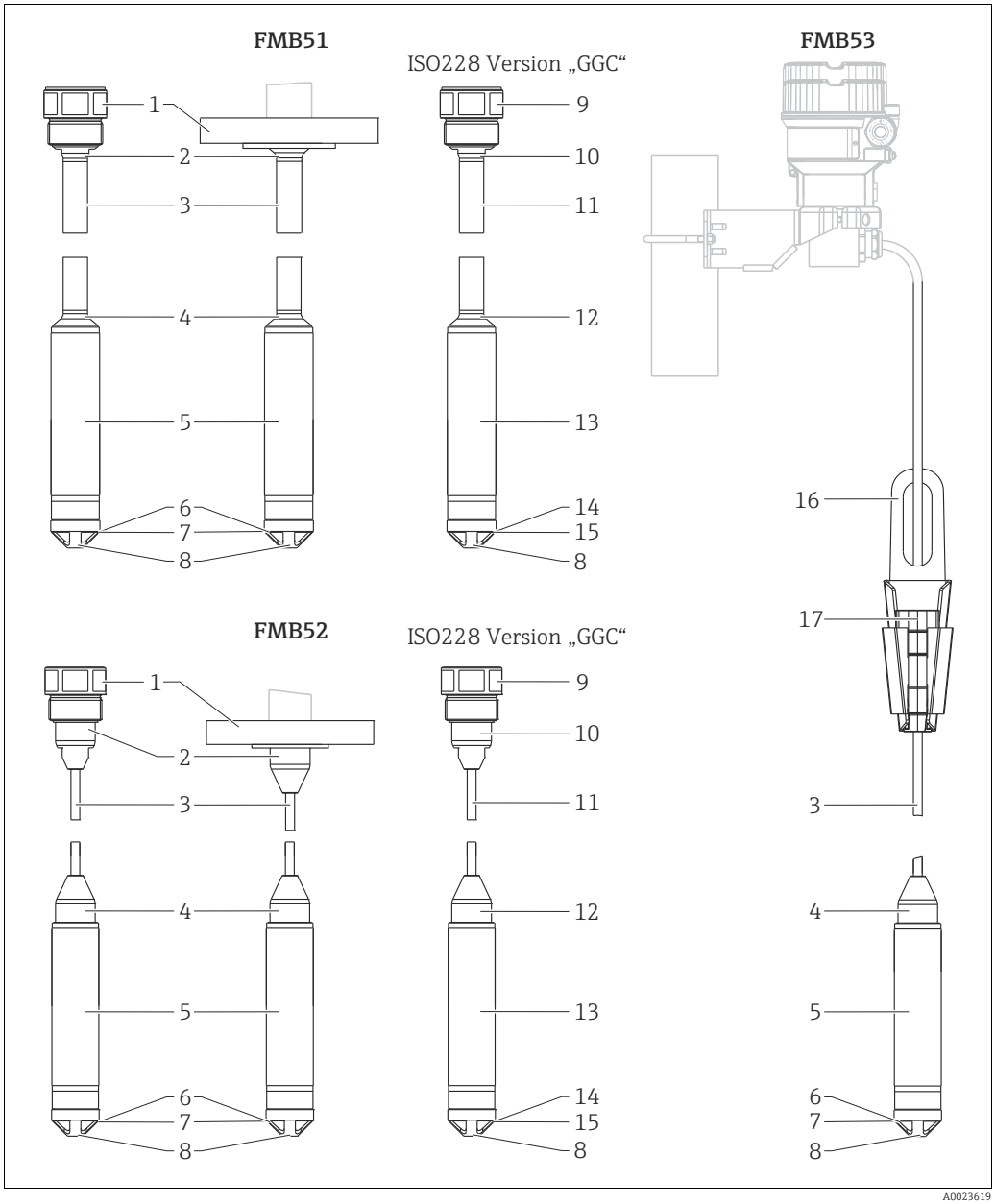

A0023619

Item number	Component part	Material
1	Process connection	→ 36 ff
2	Socket	AISI 316L (1.4404)
3	Rod	AISI 316L (1.4435)
	PE cable	Abrasion-proof cable; shielded using galvanized steel wire netting and aluminum-coated film; insulated with polyethylene (PE-LD), black/blue; copper wires, twisted, UV-resistant
	PE cable (Usage in drinking water)	Abrasion-proof cable; shielded using galvanized steel wire netting and aluminum-coated film; insulated with polyethylene (PE-LD), black; copper wires, twisted, UV-resistant

Item number	Component part	Material
3	FEP cable	Abrasion-proof cable; shielded using galvanized steel wire netting and aluminum-coated film; insulated with fluorinated ethylene propylene (FEP), black; copper wires, twisted, UV-resistant
4	Socket	AISI 316L (1.4404)
5	Probe tube	AISI 316L (1.4404)

Item number	Component part	Material
6	Process isolating diaphragm and meter body	→ 67 ff
7	Seals	→ 67 ff
8	Protection cap	POM
9	Process connection	Alloy C276 (2.4819)
10	Socket	Alloy C4 (2.4610)
11	Rod	Alloy C4 (2.4610)
12	Socket	Alloy C4 (2.4610)
13	Probe tube	Alloy C22 (2.4602)
14	Process isolating diaphragm and meter body	→ 67 ff
15	Seals	→ 67 ff
16	Suspension clamp	AISI 316L (1.4404)
17	Clamping jaw	PA-GF

DIN/EN flanges

Endress+Hauser supplies DIN/EN flanges made of stainless steel AISI 316L as per material numbers 1.4435 or 1.4404. With regard to their stability-temperature property, the materials 1.4435 and 1.4404 are grouped together under 13EO in EN 1092-1 Tab. 18. The chemical composition of the two materials can be identical.

Process isolating diaphragm

Process isolating diaphragm	Coating	Meter body	FMB50	FMB51	FMB52	Option [1]
Alloy C276 (2.4819)	-	316L (1.4435) or Alloy C276 (2.4819) [2]	✔	✔	✔	B
Alloy C276 (2.4819)	Gold>Rhodium	Alloy C276 (2.4819)	✔	✔	✔	L
Alloy C276 (2.4819)	Gold>Platin	Alloy C276 (2.4819)	—	✔	✔	N

1) Product Configurator, "Material of process isolating diaphragm" ordering feature

2) The material of the meter body corresponds to the material of the process connection.

Process isolating diaphragm	Coating	Meter body	FMB53	Option [1]
Alloy C276 (2.4819)	-	316L (1.4435)	✔	B
Alloy C276 (2.4819)	Gold>Rhodium	Alloy C276 (2.4819)	✔	L
Alloy C276 (2.4819)	Gold>Platin	Alloy C276 (2.4819)	✔	N

1) Product Configurator, "Material of process isolating diaphragm" ordering feature

Seals

Designation	Option [1]
FKM Viton	A [2]
EPDM	J [2]
Kalrez 6375	L [2]
None, welded cell	U

1) Product Configurator, "Seal" ordering feature

2) Not FMB50

TSE Certificate of Suitability (Transmissible Spongiform Encephalopathy)

The following applies to all process wetted device components:
- They do not contain any materials derived from animals.
- No auxiliaries or operating materials derived from animals are used in production or processing.

Operability

Operating concept

Operator-oriented menu structure for user-specific tasks

- Commissioning
- Operation
- Diagnostics
- Expert level

Quick and safe commissioning

Guided menus for applications

Reliable operation

- Onsite operation possible in several languages
- Standardized operation at the device and in the operating tools
- Parameters relating to measured values can be locked/unlocked using the device's write protection switch, using the device software or via remote control.

Efficient diagnostics increase measurement availability

- Remedial measures are integrated in plain text
- Diverse simulation options

Onsite operation

Local display (optional)

A 4-line liquid crystal display (LCD) is used for display and operation. The local display shows measured values, dialog texts as well as fault and notice messages in plain text, thereby supporting the user at every stage of operation. The liquid crystal display of the device can be turned in 90° stages. Depending on the orientation of the device, this makes it easy to operate the device and read the measured values.

Functions:

- 8-digit measured value display including sign and decimal point, bar graph for 4 to 20 mA HART as current display; or for PROFIBUS PA as graphic display of the standardized value of the AI Block; for FOUNDATION Fieldbus as graphic display of the transducer output in relation to the set pressure range.
- Simple and complete menu guidance as parameters are split into several levels and groups
- Each parameter is given a 3-digit ID number for easy navigation
- Possibility of configuring the display to suit individual requirements and preferences, such as language, alternating display, contrast setting, display of other measured values such as sensor temperature etc.
- Comprehensive diagnostic functions (fault and warning message etc.)

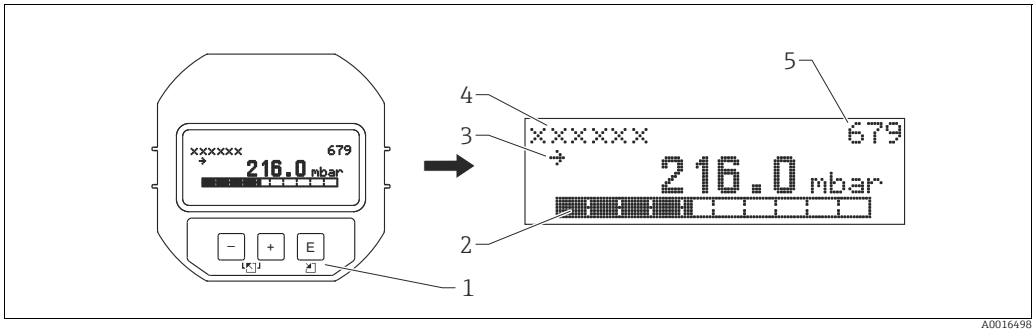

A0016498

1 Operating keys
2 Bar graph
3 Symbol
4 Header
5 Parameter ID number

Ordering information:
Product Configurator, "Output; operation" ordering feature

Function	Operation via display		
	HART	PROFIBUS PA	FOUNDATION Fieldbus
Position adjustment (zero point correction)	✔	✔	✔
Setting lower range value and upper range value - reference pressure present at the device	✔	✔	✔
Device reset	✔	✔	✔
Locking and unlocking parameters relevant to the measured value	✔	✔	✔
Value acceptance indicated by the green LED	–	–	–
Switching damping on and off	✔	✔	✔

Operating keys and elements located on the electronic insert

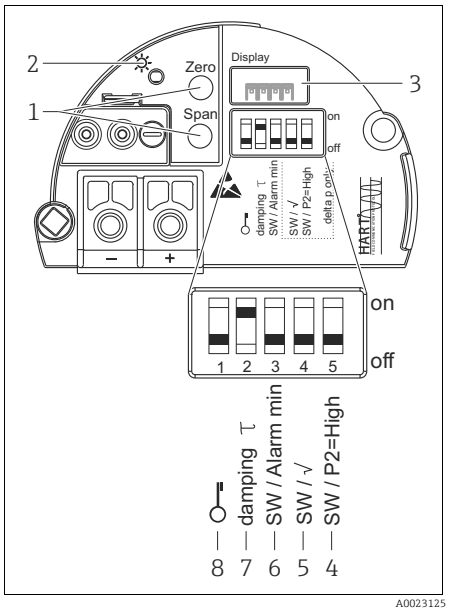

HART electronic insert

1 *Operating keys for lower range value (zero) and upper range value (span)*
2 *Green LED to indicate successful operation*
3 *Slot for optional local display*
4 *DIP switch only for Deltabar M*
5 *DIP switch only for Deltabar M*
6 *DIP switch for alarm current SW / Alarm Min (3.6 mA)*
7 *DIP switch for switching damping on/off*
8 *DIP switch for locking/unlocking parameters relevant to the measured value*

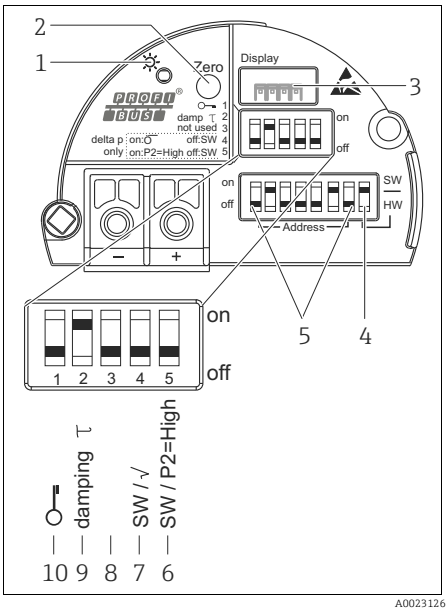

PROFIBUS PA electronic insert

1 *Green LED to indicate successful operation*
2 *Operating key for position zero adjustment or reset (Zero)*
3 *Slot for optional local display*
4 *DIP switch for bus address SW / HW*
5 *DIP switch for hardware address*
6 *DIP switch only for Deltabar M*
7 *DIP switch only for Deltabar M*
8 *Not used*
9 *DIP switch for switching damping on/off*
10 *DIP switch for locking/unlocking parameters relevant to the measured value*

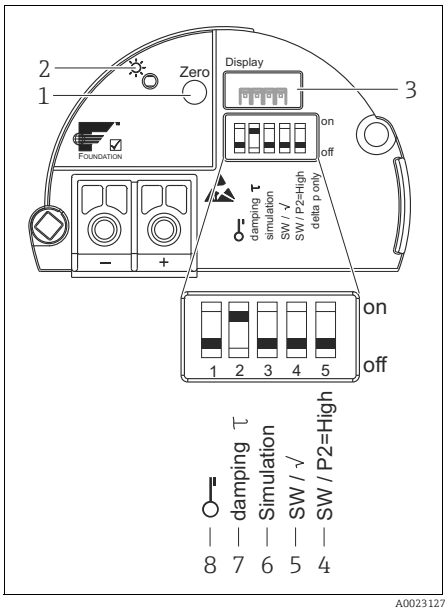

FOUNDATION Fieldbus electronic insert

1 *Operating key for position zero adjustment or reset (Zero)*
2 *Green LED to indicate successful operation*
3 *Slot for optional local display*
4 *DIP switch only for Deltabar M*
5 *DIP switch only for Deltabar M*
6 *DIP switch for simulation mode*
7 *DIP switch for switching damping on/off*
8 *DIP switch for locking/unlocking parameters relevant to the measured value*

Function	Operation with operating keys and elements on the electronic insert		
	HART	PROFIBUS PA	FOUNDATION Fieldbus
Position adjustment (zero point correction)	✔	✔	✔
Setting lower range value and upper range value - reference pressure present at the device	✔	–	–
Device reset	✔	✔	✔
Locking and unlocking parameters relevant to the measured value	✔	✔	✔
Value acceptance indicated by the green LED	✔	✔	✔
Switching damping on and off	✔	✔	✔

Ordering information:
Product Configurator, "Display, operation" ordering feature

Operating languages

You can also choose another language in addition to the standard language "English":

Designation	Option [1]
English	AA
German	AB
French	AC
Spanish	AD
Italian	AE
Dutch	AF
Chinese	AK
Japanese	AL

1) Product Configurator, "Additional operating language" ordering feature

Remote operation

All software parameters are accessible depending on the position of the write protection switch on the device.

Hardware and software for remote operation	HART	PROFIBUS PA	FOUNDATION Fieldbus
FieldCare → 61 ff	✔ [1]	✔ [2]	✔
FieldXpert SFX100 → 61 ff	✔	–	✔
NI-FBUS Configurator → 62 ff	–	–	✔

1) Commubox FXA195 required → 62 ff

2) Profiboard or Proficard required → 62 ff

FieldCare

FieldCare is an Endress+Hauser asset management tool based on FDT technology. With FieldCare, you can configure all Endress+Hauser devices as well as devices from other manufacturers that support the FDT standard.

FieldCare supports the following functions:
- Configuration of transmitters in offline and online mode
- Loading and saving device data (upload/download)
- HistoROM®/M-DAT analysis
- Documentation of the measuring point

Connection options:
- HART via Commubox FXA195 and the USB port on a computer
- PROFIBUS PA via segment coupler and PROFIBUS interface card
- Service interface with Commubox FXA291 and ToF adapter FXA291 (USB).

For further information please contact your local Endress+Hauser Sales Center.

Field Xpert SFX100

Field Xpert is an industrial PDA with integrated 3.5" touchscreen from Endress+Hauser based on Windows Mobile. It offers wireless communication via the optional VIATOR Bluetooth modem. Field Xpert also works as a stand-alone device for asset management applications. For details refer to BA00060S/04/EN.

Commubox FXA195

For intrinsically safe HART communication with FieldCare via the USB interface. For details refer to TI00404F/00/EN.

Commubox FXA291

The Commubox FXA291 connects Endress+Hauser field devices with a CDI interface (= Endress+Hauser Common Data Interface) and the USB port of a computer or laptop.
For details, see TI00405C/07/EN.

For the following Endress+Hauser devices, you also need the "ToF adapter FXA291" accessory:

- Cerabar S PMC71, PMP7x
- Deltabar S PMD7x, FMD7x
- Deltapilot S FMB70

ToF adapter FXA291

The ToF adapter FXA291 connects the Commubox FXA291 to devices in the ToF platform, pressure devices and Gammapilot via the USB port of a computer or laptop. For details, see KA00271F.

Profiboard

For connecting a PC to PROFIBUS.

Proficard

For connecting a laptop to PROFIBUS.

FF configuration program

FF configuration program, such as NI-FBUS Configurator, to
- connect devices with "FOUNDATION Fieldbus signal" into an FF-network
- set FF-specific parameters

Remote operation via:
- Operation with NI-FBUS Configurator:
  The NI-FBUS Configurator is an easy-to-use graphical environment for creating linkages, loops, and a schedule based on the fieldbus concepts.
  You can use the NI-FBUS Configurator to configure a fieldbus network as follows:
  - Set block and device tags
  - Set device addresses
  - Create and edit function block control strategies (function block applications)
  - Configure vendor-defined function and transducer blocks
  - Create and edit schedules
  - Read and write to function block control strategies (function block applications)
  - Invoke Device Description (DD) methods
  - Display DD menus
  - Download a configuration
  - Verify a configuration and compare it to a saved configuration
  - Monitor a downloaded configuration
  - Replace a virtual device by a real device
  - Save and print a configuration

System integration

The device can be given a tag name (max. 8 alphanumeric characters).

Designation	Option [1]
Measuring point (TAG), see additional specifications	Z1
Bus address, see additional specifications	Z2

1) Product Configurator, "Identification" ordering feature

Certificates and approvals

CE mark

The device meets the legal requirements of the relevant EC directives.
Endress+Hauser confirms that the device has been successfully tested by applying the CE mark.

RCM-Tick marking

The supplied product or measuring system meets the ACMA (Australian Communications and Media Authority) requirements for network integrity, interoperability, performance characteristics as well as health and safety regulations. Here, especially the regulatory arrangements for electromagnetic compatibility are met. The products are labelled with the RCM- Tick marking on the name plate.

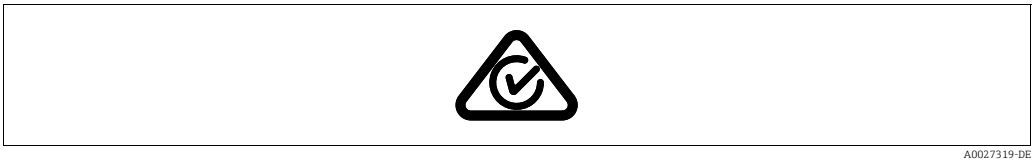

A0027319-DE

Ex approvals

- ATEX
- FM
- CSA
- Also combinations of different approvals

All explosion protection data are given in separate documentation which is available upon request. The Ex documentation is supplied as standard with all devices approved for use in explosion hazardous areas.
→ 71 ff, "Safety Instructions" and "Installation/Control Drawings" ordering features.

EAC conformity

The measuring system meets the legal requirements of the applicable EAC guidelines. These are listed in the corresponding EAC Declaration of Conformity together with the standards applied.
Endress+Hauser confirms successful testing of the device by affixing to it the EAC mark.

Suitability for hygienic processes

All materials in contact with foodstuffs comply with framework Regulation (EC) 1935/2004.
The Deltapilot is available with hygienic process connections (overview: see order code).

⚠ CAUTION

Contamination in the process!

Risk of contamination if incorrect seals and parts are used!

- To avoid the risk of contamination, when installing the device comply with the design principles of EHEDG, Guideline 37 "Hygienic Design and Application of Sensors" and Guideline 16 "Hygienic Pipe Couplings".
- Suitable assemblies and seals must be used to ensure hygienic design in accordance with 3-A SSI and EHEDG specifications.
- The leak-proof connections can be cleaned with the cleaning methods typical of this industry (CIP and SIP). Attention must be paid to the pressure and temperature specifications of the sensor and process connections for CIP and SIP processes (clean in place/sterilize in place).

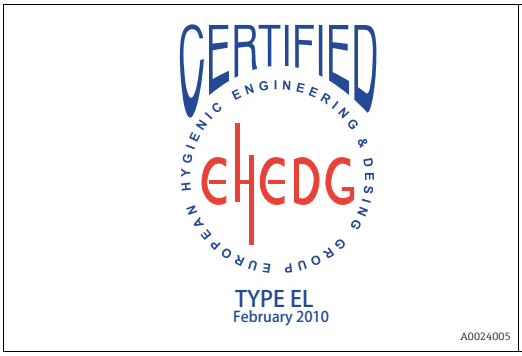

A0024005

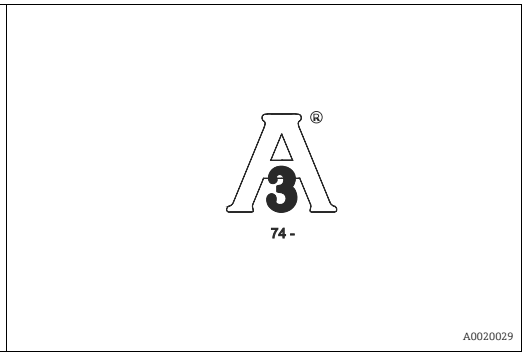

A0020029

Gap-free connections can be cleaned without residue using the usual cleaning methods.

Certificate of Compliance ASME BPE 2012 (FMB50 only)

Ordering information:
Product Configurator, "Additional approval" ordering feature, option "LW"

Functional safety SIL

The Deltapilot M with 4 to 20 mA output signal has been developed to assessed and certified by TÜV NORD CERT as per IEC 61508 Edition 2.0 and IEC 61511. These devices can be used to monitor the process level and pressure up to SIL 2. For a detailed description of the safety functions with Deltapilot M, settings and functional safety data, see the "Functional safety manual - Deltapilot M" SD00347P.
Ordering information:
Product Configurator, "Additional approval:" ordering feature, option "LA".

Overfill protection

WHG (FMB50, FMB51, FMB52): see document ZE00275P

Ordering information:
Product Configurator, "Additional approval" ordering feature, option "LC".

AD2000

The pressure retaining material 316L (1.4435/1.4404) corresponds to AD2000 - W2/W10.

Pressure Equipment Directive (PED)

The Deltapilot M device corresponds to Article 3 (3) of the EC directive 97/23/EC (Pressure Equipment Directive) and has been designed and manufactured according to good engineering practice.

Manufacturer declaration

- FDA conformity
- TSE-free, materials free from animal origin
- Regulation EC 2023/ 2006 (GMP)
- Regulation (EC) No. 1935/2004 on materials intended to come into contact with food

Downloading the manufacturer declaration

http://www.endress.com/en/download

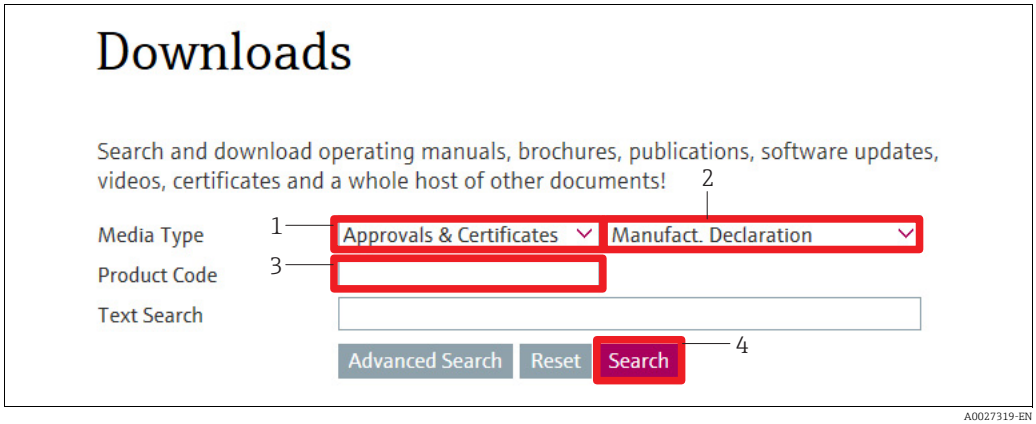

1. Enter desired product code
2. Select "Approvals & Certificates"
3. Select "Manufact. Declaration"
4. Click on "Start Search"

The available downloads are displayed.

Marine approval

Designation	FMB50	FMB51	FMB52	FMB53	Option [1]
GL	✔	–	✔	✔	LE
ABS	✔	–	✔	✔	LF
LR	✔	–	✔	✔	LG
BV	✔	–	✔	✔	LH

Designation	FMB50	FMB51	FMB52	FMB53	Option [1]
DNV	✔	–	✔	✔	LI

1) Product Configurator, "Additional options 1" and "Additional options 2" ordering feature

Other standards and guidelines

DIN EN 60770 (IEC 60770):
Transmitters for use in industrial process control systems
Part 1: Methods for inspection and routine testing

DIN 16086:
Electrical pressure measuring instruments, pressure sensors, pressure transmitters, pressure measuring instruments, concepts, specifications on data sheets

EN 61326 series:
EMC product family standard for electrical equipment for measurement, control and laboratory use.

EN 60529:
Degrees of protection by housing (IP code)

Drinking water approval

Designation	Option [1]
KTW	LQ
NSF61	LR
ACS (under development)	LS

1) Product Configurator, "Additional options 1" and "Additional options 2" ordering feature

Classification of process sealing between electrical systems and (flammable or combustible) process fluids in accordance with ANSI/ ISA 12.27.01

Endress+Hauser instruments are designed according to ANSI/ISA 12.27.01 either as single seal or dual seal devices with annunciation, allowing the user to waive the use and save the cost of installing external secondary process seals in the conduit as required by the process sealing sections of ANSI/ NFPA 70 (NEC) and CSA 22.1 (CEC). These instruments comply with the North-American installation practice and provide a very safe and cost-saving installation for pressurized applications with hazardous fluids.
Further information can be found in the control drawings of the relevant devices.

Inspection certificate

Designation	FMB50	FMB51	FMB52	FMB53	Option [1]
3.1 Material certificate, wetted metallic parts, EN10204-3.1 inspection certificate	✔	✔	✔	✔	JA [2]
Conformity to NACE MR0175, wetted metallic parts	✔	✔	✔	✔	JB [2]
Conformity to NACE MR0103, wetted metallic parts	✔	✔	✔	✔	JE [2]
Conformity to AD2000, wetted metallic parts, excepting process membrane	✔	–	–	–	JF
Surface finish measurement ISO4287/Ra, wetted metallic parts, Inspection certificate	✔	–	–	–	KB
Helium leak test, internal procedure, inspection certificate	✔	✔	✔	✔	KD
Pressure test, internal procedure, inspection certificate	✔	✔	✔	–	KE
3.1 Material certificate+Delta-Ferrit measurement, internal procedure, wetted metallic parts, EN10204-3.1 inspection certificate	✔	–	–	–	KF
3.1 Material certificate+PMI test (XRF), internal procedure, wetted metallic parts, EN10204-3.1 inspection certificate	✔	✔	✔	✔	KG

1) Product Configurator, "Test, certificate" ordering feature

2) The selection of this feature for coated process isolating diaphragm / process connections refers to the metallic base material.

Calibration; unit

Designation	Option [1]
Sensor range; %	A
Sensor range; mbar/bar	B
Sensor range; kPa/MPa	C
Sensor range; mm/mH2O	D
Sensor range; inH2O/ftH2O	E
Sensor range; psi	F
Customized pressure; see additional specification	J
Customized level; see additional specification	K

1) Product Configurator, "Calibration; unit" ordering feature

Calibration

Designation	Option [1]
Factory calibration, 5-point	F1
DKD/DAkkS calibration certificate 10-point[2]	F2

1) Product Configurator, "Calibration" ordering feature

2) Only for FMB50

Service

Designation	Option [1]
Oil and grease removed [2]	HA
Cleaned for oxygen service [2]	HB
Cleaned from PWIS (PWIS = paint wetting impairment substances) [2]	HC
Configured min alarm current	IA
Configured HART Burst Mode PV	IB

1) Product Configurator, "Service" ordering feature

2) Only device, not accessory or enclosed accessory

Ordering information

Detailed ordering information is available as follows:
- In the Product Configurator on the Endress+Hauser website: www.endress.com → Click "Corporate" → Select your country → Click "Products" → Select the product using the filters and search field → Open product page → The "Configure" button to the right of the product image opens the Product Configurator.
- From your Endress+Hauser Sales Center: www.addresses.endress.com

Product Configurator - the tool for individual product configuration

- Up-to-the-minute configuration data
- Depending on the device: direct input of information specific to measuring point, such as measuring range or operating language
- Automatic verification of exclusion criteria
- Automatic creation of the order code and its breakdown in PDF or Excel output format
- Ability to order directly in the Endress+Hauser Online Shop

Configuration data sheet

Pressure

The following configuration data sheet has to be filled in and included with the order if the option J - Customized pressure has been selected in feature 90 "Calibration; unit" in the ordering information.

Pressure Engineering Unit

❑ mbar	❑ mmH_2O	❑ mmHg	❑ Pa
❑ bar	❑ mH_2O		
	❑ ftH_2O	❑ kgf/cm^2	❑ kPa
❑ psi	❑ inH_2O		❑ MPa

Calibration Range / Output

Low range value (LRV): _____ [pressure engineering unit]

Upper range value (URV): _____ [pressure engineering unit]

Display Information

1st Value Display [1)]
❑ Main Value

2nd Value Display [1)]
❑ none (Default)
❑ Main Value [%]
❑ Pressure
❑ Current [mA] (HART only)
❑ Temperature

[1)] Depending on sensor and communication variant

Damping

Damping: _____ sec (Default 2 sec)

Level

The following configuration data sheet has to be filled in and included with the order if the option K - Customized level has been selected in feature 90 "Calibration; unit" in the ordering information.

Pressure Engineering Unit

❑ mbar	❑ mmH_2O	❑ mmHg	❑ Pas
❑ bar	❑ mH_2O		❑ kPa
	❑ ftH_2O	❑ kgf/cm^2	❑ MPa
❑ psi	❑ inH_2O		

Output Unit (Scaled unit)

Mass	Length	Volume	Volume	Percent
❑ kg	❑ m	❑ l	❑ gal	❑ %
❑ t	❑ dm	❑ hl	❑ Igal	
❑ lb	❑ cm			
	❑ mm	❑ m^3		
		❑ ft^3		
	❑ ft	❑ in^3		
	❑ inch			

Empty pressure [a]:
Low pressure value (empty) _____ [pressure engineering unit]

Empty calibration [a]:
Low level value (empty) _____ [Scaled Unit]

Full pressure [b]:
High pressure value (full) _____ [pressure engineering unit]

Full calibration [b]:
High level value (full) _____ [Scaled Unit]

Example

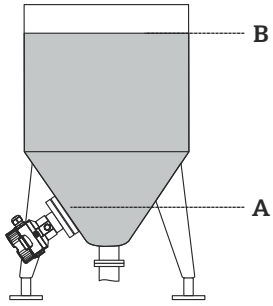

A0023621

A *0 mbar / 0m*
B *300 mbar (4.5psi) / 3 m (9.8 ft).*

Display Information

1st Value Display [1)]
❑ Main Value

2nd Value Display [1)]
❑ none (Default)
❑ Main Value [%]
❑ Pressure
❑ Current [mA] (HART only)
❑ Temperature

[1)] Depending on sensor and communication variant

Damping

Damping: _____ sec (Default 2 sec)

Smallest calibratable measuring span (preset at the factory) → 14.

Accessories

Suspension clamp (FMB53 only)	→ 30 ff
Extension cable shortening kit (FMB53 only)	See Product Configurator, "Accessory enclosed" ordering feature, option "PW" or can be ordered as a separate accessory (part no. 71125862). For details refer to SD00553P/00/A2.
M12 connector	→ 24 ff Ordering information: Product Configurator, "Enclosed accessories" ordering feature, option "RL, RM, RN".
Welding necks and Weld-in tool flanges	See technical Information TI00426F/00.

Adapter Uni for FMB50

The following adapters can be used to create a connection between the customer's process connection and the Deltapilot S FMB50 with a universal adapter:

A

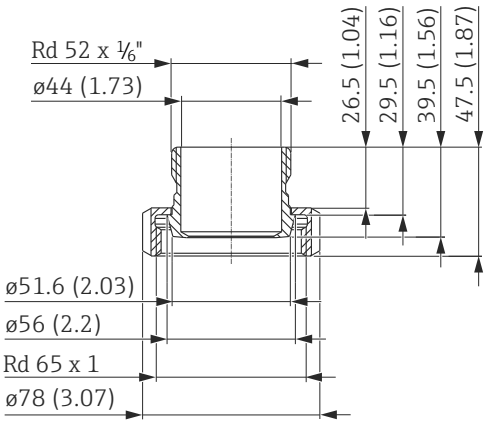

B

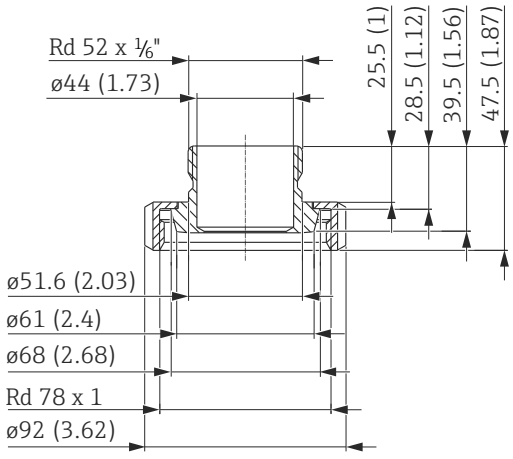

C

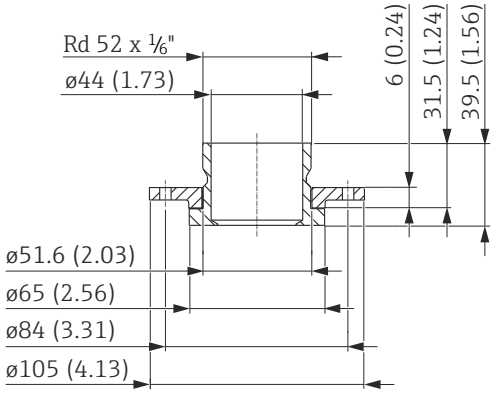

D

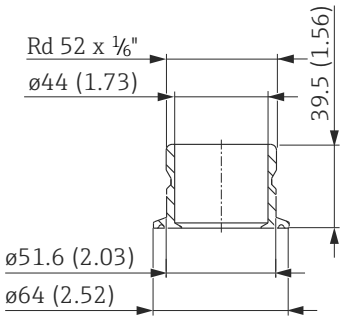

E

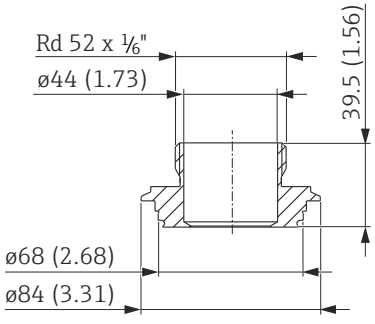

Engineering unit mm (in)

Item	Designation	Material	Weight kg (lbs)	Order number	Order number with 3.1 inspection certificate	Option [1]
A	DIN11851 DN40	AISI 316L (1.4435)	0.2 (0.44)	71114172	71114178	RA / R1
B	DIN11851 DN50		0.3 (0.66)	71114173	71114205	RB / R2
C	DRD DN50		0.6 (1.32)	71114174	71114206	RC / R3
D	Clamp 2"		0.2 (0.44)	71114176	71114207	RD / R4
E	Varivent		0.5 (1.1)	71114177	71114208	RF / R6

1) Product Configurator, “Enclosed accessories” section

Documentation

Technical Information

- EMC test procedures: TI00241F/00/EN
- Deltabar M: TI00434P/00/EN
- Cerabar M: TI00436P/00/EN

Operating Instructions

- 4...20 mA HART: BA00382P/00/EN
- PROFIBUS PA: BA00383P/00/EN
- FOUNDATION Fieldbus: BA00384P/00/EN

Brief Operating Instructions

- 4...20 mA HART: KA01033P/00/EN
- PROFIBUS PA: KA01034P/00/EN
- FOUNDATION Fieldbus: KA01035P/00/EN

Functional safety manual (SIL)

Deltapilot M (4 to 20 mA): SD00347P/00/EN

Safety Instructions

Directive	Approval	Category	Type	Electronics	Documentation	Option [1]
ATEX	Ex ia IIC	II 1/2 G	FMB50, FMB51, FMB52	– 4 to 20 mA HART	– XA00474P/00	BA
	Ex t IIC	II 1/2 D	FMB50, FMB51	– 4 to 20 mA HART	– XA00475P/00	BB
	Ex nA	II 3 G	FMB50, FMB51, FMB52, FMB53	– 4 to 20 mA HART – PROFIBUS PA – FOUNDATION Fieldbus	– XA00477P/00	BD
	Ex ia IIC	II 2 G	FMB50, FMB51, FMB52, FMB53	– 4 to 20 mA HART	– XA00474P/00	BE
	Ex ic IIC	II 3 G	FMB50, FMB51, FMB52, FMB53	– 4 to 20 mA HART	– XA00494P/00	BG
	Ex ia IIC Ex ia IIC	II 1/2 G II 1/2 D	FMB50, FMB51	– 4 to 20 mA HART	– XA00476P/00	B1

1) Product Configurator, "Approval" ordering feature

Directive	Approval	EPL	Type	Electronics	Documentation	Option [1]
IECEx	Ex ia IIC	Ga/Gb	FMB50, FMB51, FMB52	– 4 to 20 mA HART	– XA00478P/00	IA
	Ex ia IIC	Gb	FMB52, FMB53	– 4 to 20 mA HART	– XA00478P/00	IC
	Ex t IIIC	Da/Db	FMB50, FMB51	– 4 to 20 mA HART	– XA00479P/00	ID
	Ex ic IIC	Gc	FMB50, FMB51, FMB52, FMB53	– 4 to 20 mA HART	– XA00493P/00	IE
	Ex ia IIC Ex ia IIIC	Ga/Gb Da/Db	FMB50, FMB51	– 4 to 20 mA HART	– XA00480P/00	I1

1) Product Configurator, "Approval" ordering feature

Directive	Approval	Type	Electronics	Documentation	Option [1]
NEPSI	Ex ia IIC	FMB50, FMB51, FMB52, FMB53	– 4 to 20 mA HART – PROFIBUS PA – FOUNDATION Fieldbus	– XA00535P/00	NA

1) Product Configurator, "Approval" ordering feature

Directive	Approval	Electronics	Documentation	Option [1]
TIIS	Ex ia IIC T4	– 4 to 20 mA HART	–	TA

1) Product Configurator, "Approval" ordering feature

Directive	Approval	Type	Electronics	Documentation	Option [1]
INMETRO	Ex ia IIC T6...T4 Ga/Gb Ex ia IIC T6...T4 Gb	FMB50, FMB51, FMB52	– 4 to 20 mA HART – PROFIBUS PA – FOUNDATION Fieldbus	– XA01304P/00	MA

1) Product Configurator, "Approval" ordering feature

Installation/Control Drawings

Directive	Approval	Type	Electronics	Documentation	Option [1]
FM	FM IS Cl.I,II,III Div.1 Gr.A-G, AEx ia, FM NI Cl.I Div.2 Gr.A-D, FM IS: Zone 0, 1, 2, 20, 21, 22/ FM NI: Zone 2	FMB50	– 4 to 20 mA HART – PROFIBUS PA, FOUNDATION Fieldbus	– ZD00236P/00 – XA00566P/00	FA
	FM IS Cl.I,II,III Div.1 Gr.A-G, AEx ia, Zone 0,1, 2, 20, 21, 22	FMB51	– 4 to 20 mA HART – PROFIBUS PA, FOUNDATION Fieldbus	– – XA00566P/00	
	FM DIP Cl.II,III Div.1 Gr.E-G, Zone 21, 22	FMB50, FMB51	– 4 to 20 mA HART – PROFIBUS PA – FOUNDATION Fieldbus	–	FC
	FM NI Cl.I Div.2 Gr.A-D, Zone 2	FMB50, FMB51	– 4 to 20 mA HART – PROFIBUS PA – FOUNDATION Fieldbus	–	FD
	FM IS Cl.I Div.1 Gr.A-D, AEx ia, Zone 0, 1, 2	FMB52, FMB53	– 4 to 20 mA HART – PROFIBUS PA. FOUNDATION Fieldbus	– ZD00236P/00 – XA00566P/00	FE
CSA	C/US IS Cl.I,II,III Div.1 Gr.A-G, C/US IS Cl.I Div.2 Gr.A-D, Ex ia, Zone 0,1, 2	FMB50, FMB53	– 4 to 20 mA HART – PROFIBUS PA, FOUNDATION Fieldbus	– ZD00239P/00 – XA00560P/00	CA
	C/US IS Cl.I,II,III Div.1 Gr.A-G, C/US IS Cl.I Div.2 Gr.A-D, Ex ia C: Zone 0, 1, 2/ US: Zone 0, 1, 2, 20, 21, 22	FMB51, FMB52	– 4 to 20 mA HART – PROFIBUS PA, FOUNDATION Fieldbus	– – XA00560P/00	
	CSA C/US Cl.II, III Div.1 Gr.E-G	FMB50	– 4 to 20 mA HART	–	CC
	CSA C/US Cl.II, III Div.1 Gr.E-G US: Zone 21, 22	FMB51	– 4 to 20 mA HART	–	

1) Product Configurator, "Approval" ordering feature

Combination certificate

Directive	Approval	Electronics	Documentation	Option [1]
KEMA/ FM / CSA	ATEX II Ex ia + FM/CSA IS ATEX II 1/2G Ex ia IIC T6 + FM/CSA IS CL.I Div.1 Gr.A-D, FM/CSA: Zone 0,1,2	– 4 to 20 mA HART	– ZD00236P/00 – ZD00239P/00	8C
		PROFIBUS PA, FOUNDATION Fieldbus	– XA00474P/00	

1) Product Configurator, "Approval" ordering feature

Overfill protection

WHG (FMB50, FMB51, FMB52): ZE00275P/00/DE

Registered trademarks

HART®	Registered trademark of the FieldComm Group, Austin, USA
PROFIBUS®	Registered trademark of the PROFIBUS User Organization, Karlsruhe, Germany
FOUNDATION™ Fieldbus	Registered trademark of the FieldComm Group, Austin, USA



www.addresses.endress.com

Endress+Hauser

People for Process Automation

TAG:
15-LIT-301
23-LIT-101
23-LIT-301

Technical Information
Micropilot FMR50

Free space radar





Level measurement in liquids

Application

- Continuous, non-contact level measurement of liquids, pastes and slurries
- Encapsulated PVDF or PP cladded horn antenna
- Maximum measuring range: 40 m (131 ft)
- Temperature: −40 to +130 °C (−40 to +266 °F)
- Pressure: −1 to +3 bar (−14.5 to +43.5 psi)
- Accuracy: ± 2 mm
- International explosion protection certificates; WHG; marine approvals
- Linearity protocol (3-point, 5-point)

Your benefits

- Reliable measurement even for changing product and process conditions
- HistoROM data management for easy commissioning, maintenance and diagnostics
- Highest reliability due to Multi-Echo Tracking
- SIL2 according to IEC 61508, SIL3 in case of homogeneous or heterogeneous redundancy
- Seamless integration into control or asset management systems
- Intuitive user interface in national languages
- Easy proof test for SIL and WHG

Endress+Hauser
People for Process Automation

Table of contents

Important document information 4
Symbols 4

Function and system design 6
Measuring principle 6

Input 8
Measured variable 8
Measuring range 8
Operating frequency 11
Transmitting power 11

Output 12
Output signal 12
Signal on alarm 13
Linearization 13
Galvanic isolation 13
Protocol-specific data 13

Power supply 18
Terminal assignment 18
Device plug connectors 25
Supply voltage 26
Power consumption 28
Current consumption 28
Power supply failure 29
Potential equalization 29
Terminals 29
Cable entries 29
Cable specification 29
Overvoltage protection 30

Performance characteristics 31
Reference operating conditions 31
Maximum measured error 31
Measured value resolution 32
Reaction time 32
Influence of ambient temperature 32

Installation 33
Installation conditions 33
Measuring conditions 36
Installation in vessel (free space) 37
Installation in stilling well 41
Installation in bypass 43
Vessels with heat insulation 45

Environment 46
Ambient temperature range 46
Ambient temperature limits 46
Storage temperature 47
Climate class 47
Altitude according to IEC61010-1 Ed.3 47
Degree of protection 47
Vibration resistance 47
Cleaning the antenna 47
Electromagnetic compatibility (EMC) 48

Process 49
Process temperature, Process pressure 49
Dielectric constant 49

Mechanical construction 50
Dimensions 50
Weight 55
Materials: GT19 housing 56
Materials: GT20 housing 57
Materials: Antenna and process connection 58
Materials: Weather protection cover 59

Operability 60
Operating concept 60
Local operation 60
Operation with remote display and operating module FHX50 61
Remote operation 61
Integration in tank gauging system 65
System integration via Fieldgate 66

Certificates and approvals 67
CE mark 67
C-Tick symbol 67
Ex approval 67
Dual seal according to ANSI/ISA 12.27.01 67
Functional Safety 67
WHG 67
Pressure Equipment Directive 67
Marine certificate (in preparation) 67
Radio standard EN302729-1/2 67
Radio standard EN302372-1/2 68
FCC / Industry Canada 68
Japanese radio approval 69
CRN approval 69
Track record 69
Other standards and guidelines 70

Ordering information 71
Ordering information 71
3-point linearity protocol 72
5-point linearity protocol 73
Customized parametrization 74
Services 74

Accessories 75
Device-specific accessories 75
Communication-specific accessories 81
Service-specific accessories 82
System components 82

Documentation 83
Standard documentation 83
Supplementary documentation 83
Safety Instructions (XA) 83

Registered trademarks 86

Patents **86**

Important document information

Symbols

Safety symbols

Symbol	Meaning
DANGER	**DANGER!** This symbol alerts you to a dangerous situation. Failure to avoid this situation will result in serious or fatal injury.
WARNING	**WARNING!** This symbol alerts you to a dangerous situation. Failure to avoid this situation can result in serious or fatal injury.
CAUTION	**CAUTION!** This symbol alerts you to a dangerous situation. Failure to avoid this situation can result in minor or medium injury.
NOTICE	**NOTE!** This symbol contains information on procedures and other facts which do not result in personal injury.

Electrical symbols

Symbol	Meaning	Symbol	Meaning
⎓	Direct current	~	Alternating current
⎓ ~	Direct current and alternating current	⏚	**Ground connection** A grounded terminal which, as far as the operator is concerned, is grounded via a grounding system.
⊜	**Protective ground connection** A terminal which must be connected to ground prior to establishing any other connections.	⏚	**Equipotential connection** A connection that has to be connected to the plant grounding system: This may be a potential equalization line or a star grounding system depending on national or company codes of practice.

Symbols for certain types of information

Symbol	Meaning
✓	**Permitted** Procedures, processes or actions that are permitted.
✓✓	**Preferred** Procedures, processes or actions that are preferred.
✗	**Forbidden** Procedures, processes or actions that are forbidden.
ℹ	**Tip** Indicates additional information.
📖	Reference to documentation
📄	Reference to page
🖼	Reference to graphic
👁	Visual inspection

Symbols in graphics

Symbol	Meaning
1, 2, 3 ...	Item numbers
1. , 2. , 3. ...	Series of steps
A, B, C, ...	Views
A-A, B-B, C-C, ...	Sections
	**Hazardous area** Indicates a hazardous area.
	**Safe area (non-hazardous area)** Indicates the non-hazardous area.

Function and system design

Measuring principle

The Micropilot is a "downward-looking" measuring system, operating based on the time-of-flight method (ToF). It measures the distance from the reference point (process connection) to the product surface. Radar impulses are emitted by an antenna, reflected off the product surface and received again by the radar system.

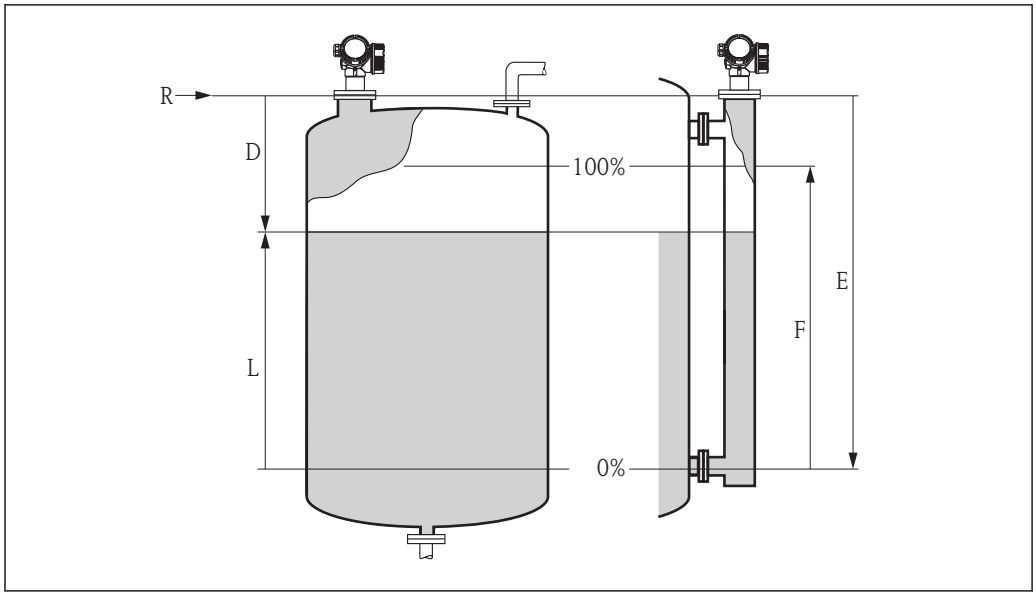

1 *Setup parameters of the Micropilot*

R Reference point of the measurement (lower edge of the flange or threaded connection)
E Empty calibration (= zero)
F Full calibration (= span)
D Measured distance
L Level (L = E - D)

Input

The reflected radar impulses are received by the antenna and transmitted into the electronics. A microprocessor evaluates the signal and identifies the level echo caused by the reflection of the radar impulse at the product surface. The unambiguous signal identification is accomplished by the PulseMaster® eXact software together with the Multi-echo tracking algorithms, based on many years of experience with time-of-flight technology.

The distance D to the product surface is proportional to the time of flight t of the impulse:

$D = c \cdot t/2$,

with c being the speed of light.

Based on the known empty distance E, the level L is calculated:

$L = E - D$

The reference point R of the measurement is located at the process connection. For details see the dimensional drawing:
FMR50: → 51

The Micropilot is equipped with functions to suppress interference echoes. The user can activate these functions. Together with the multi-echo tracking algorithms they ensure that interference echoes (i.e. from edges and weld seams) are not interpreted as level echo.

Output

The Micropilot is commissioned by entering an empty distance "E" (=zero), a full distance "F" (=span) and application parameters which automatically adapt the instrument to the process conditions. For models with a current output, the factory adjustment for zero point "E" and span "F" is 4 mA and 20 mA. For digital outputs and the display module, the factory adjustment for zero point "E" and span "F" is 0 % and 100 %.

A linearization with max. 32 points, based on a table entered either manually or semi-automatically, can be activated locally or remotely. This function provides a measurement in engineering units and a linear output signal for spheres, horizontal cylindrical tanks and vessels with conical outlet.

Life cycle of the product

Engineering
- Universal measuring principle
- Measurement unaffected by medium properties
- Hardware and software developed according to SIL IEC 61508

Procurement
- Endress+Hauser being the world market leader in level measurement guarantees asset protection
- Worldwide support and service

Installation
- Special tools are not required
- Reverse polarity protection
- Modern, detachable terminals
- Main electronics protected by a separate connection compartment

Commissioning
- Fast, menu-guided commissioning in only a few steps on site or from the control room
- Plain text display in national languages reduces the risk of error or confusion
- Direct local access of all parameters
- Short instruction manual at the device

Operation
- Multi-echo tracking: Reliable measurement through self-learning echo-search algorithms taking into account the short-term and long-term history in order to check the found echoes for plausibility and to suppress interference echoes.
- Diagnostics in accordance with NAMUR NE107

Maintenance
- HistoROM: Data backup for instrument settings and measured values
- Exact instrument and process diagnosis to assist fast decisions with clear details concerning remedies
- Intuitive, menu-guided operating concept in national languages saves costs for training, maintenance and operation
- Cover of the electronics compartment can be opened in hazardous areas

Retirement
- Order code translation for subsequent models
- RoHS-conforming (Restriction of certain Hazardous Substances), unleaded soldering of electronic components
- Environmentally sound recycling concept

Input

Measured variable

The measured variable is the distance between the reference point and the product surface.

The level is calculated from this distance, taking into account the empty distance "E" entered by the user.

If required, the level can be converted into other variables (volume, mass) by means of a linearization (up to 32 points).

Measuring range

Maximum measuring range

Device	Maximum measuring range
FMR50 - standard version	30 m (98 ft)
FMR50 - with "Advanced dynamics" application package	40 m (131 ft)

Usable measuring range

The usable measuring range depends on the size of the antenna, the reflectivity of the medium, the mounting location and eventual interference reflections.

The following tables describe the groups of media as well as the achievable measuring range as a function of application and media group. If the dielectric constant of a medium is unknown, it is recommended to assume media group B to ensure a reliable measurement.

Media groups

Media groups	DK (ε_r)	Example
A	1.4 to 1.9	non-conducting liquids, e.g. liquefied gas [1]
B	1.9 to 4	non-conducting liquids, e.g. benzene, oil, toluene, ...
C	4 to 10	e.g. concentrated acids, organic solvents, esters, aniline, alcohol, acetone, ...
D	> 10	conducting liquids, e.g. aqueous solutions, dilute acids and alkalis

1) Treat Ammonia NH_3 as a medium of group A.

Dielectric constants (DC values) for many important media are summarized in

For dielectric constants (DC values) of many important media refer to:
- the **DC Manual** by Endress+Hauser (CP01076F) by Endress+Hauser
- the **DC Values** App by Endress+Hauser (available for Android and iOS)

Storage tank	Buffer tank
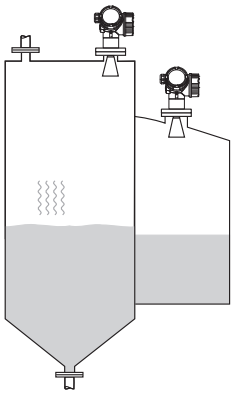 A0018833	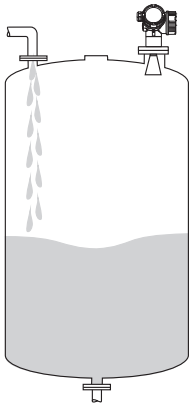 A0018835
Calm product surface (e.g. intermittent filling, filling from bottom, immersion tubes)	Moving surfaces (e.g. continuous filling, from above, mixing jets)
Antenna size	Antenna size

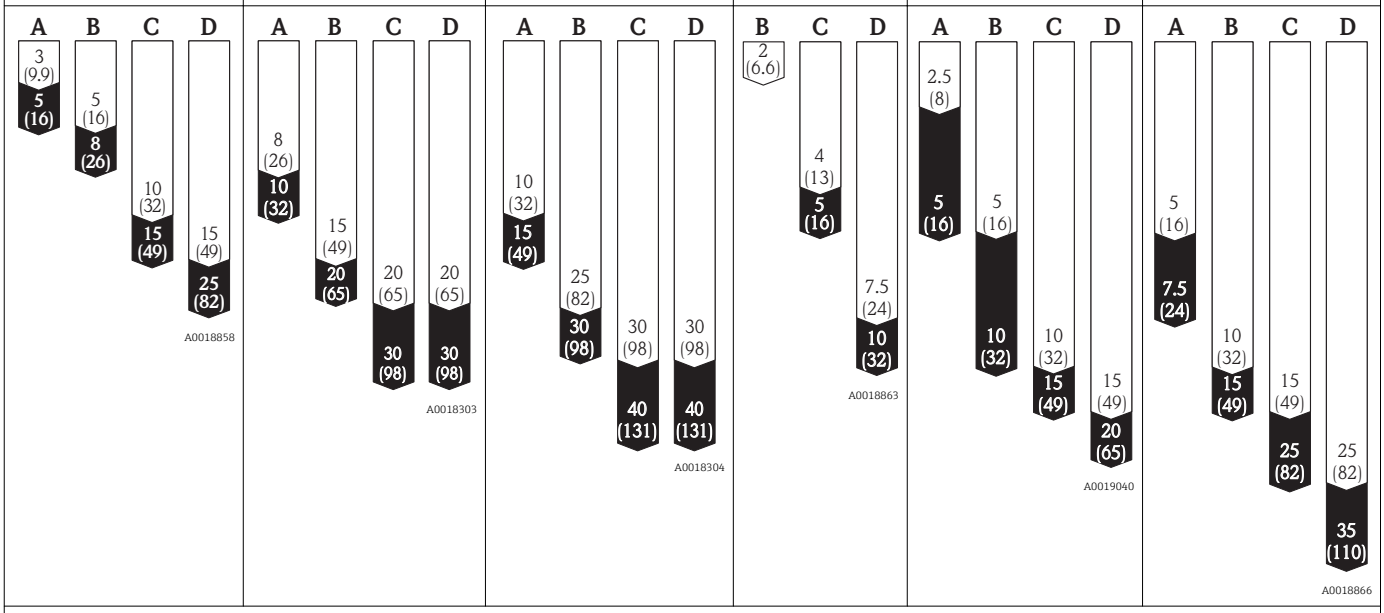

Measuring range [m (ft)]

Legend

▯	Measuring range of the standard version
▮	Measuring range for the "Advanced dynamics" application package (product structure: feature 540: "Application Package", Option EM: "Advanced dynamics")

<table>
<tr><th colspan="3">Process tank with agitator</th><th>Stilling well</th></tr>
<tr><td colspan="3"> 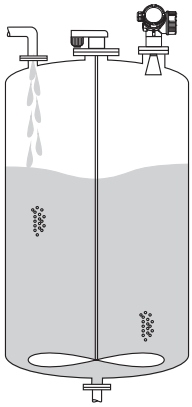
A0018837
Turbulent surface (e.g. filling from above, agitators, baffles)</td><td> 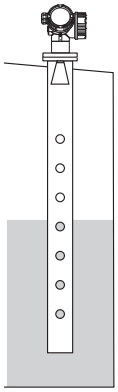
A0018842</td></tr>
<tr><td colspan="3">Antenna size</td><td>Antenna size</td></tr>
<tr><td>40 mm (1½ in)</td><td>80 mm (3 in)</td><td>100 mm (4 in)</td><td>40 to 100 mm (1½ to 4 in)</td></tr>
<tr><td> 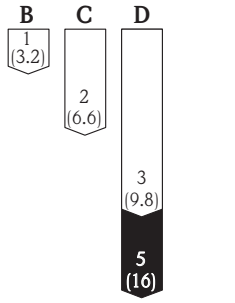

A0018867</td><td> 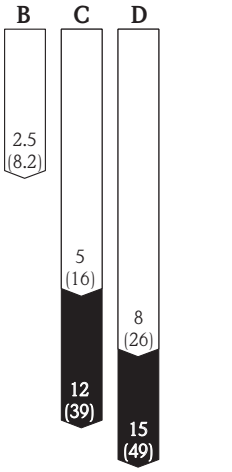

A0018869</td><td> 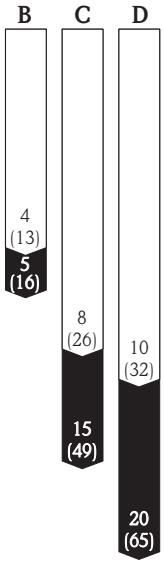

A0018870</td><td> 

A0018851</td></tr>
<tr><td colspan="4">Measuring range [m (ft)]</td></tr>
</table>

Legend

▯	Measuring range of the standard version
▮	Measuring range for the "Advanced dynamics" application package (product structure: feature 540: "Application Package", Option EM: "Advanced dynamics")

Operating frequency

K-band (~ 26 GHz)

Up to 8 Micropilot transmitters can be installed in the same tank because the transmitter pulses are statistically coded.

Transmitting power

Distance	Average energy density in beam direction	
	Standard version	With "Advanced dynamics" application package [1]
1 m (3.3 ft)	< 12 nW/cm^2	< 64 nW/cm^2
5 m (16 ft)	< 0.4 nW/cm^2	< 2.5 nW/cm^2

1) Product structure, feature 540: "Application package", option EM: "Advanced dynamics"

Output

Output signal

HART

Signal coding	FSK ±0.5 mA over current signal
Data transmission rate	1200 Bit/s
Galvanic isolation	Yes

PROFIBUS PA

Signal coding	Manchester Bus Powered (MBP)
Data transmission rate	31.25 kBit/s, voltage mode
Galvanic isolation	Yes

FOUNDATION Fieldbus

Signal coding	Manchester Bus Powered (MBP)
Data transmission rate	31.25 kBit/s, voltage mode
Galvanic isolation	Yes

Switch output

For HART devices, the switch output is available as an option. See product structure, feature 20: "Power Supply, Output", option B: "2-wire; 4-20mA HART, switch output"

Devices with PROFIBUS PA and FOUNDATION Fieldbus always have a switch output.

Switch output	
Function	Open collector switching output
Switching behavior	Binary (conductive or non-conductive), switches when the programmable switch point is reached
Failure mode	non-conductive
Electrical connection values	U = 10.4 to 35 V_{DC}, I = 0 to 40 mA
Internal resistance	R_i < 880 Ω The voltage drop at this internal resistance has to be taken into account on planning the configuration. For example, the resulting voltage at a connected relay must be sufficient to switch the relay.
Insulation voltage	floating, Insulation voltage 1350 V_{DC} to power supply aund 500 V_{AC} to ground
Switch point	freely programmable, separately for switch-on and switch-off point
Switching delay	freely programmable from 0 to 100 sec. , separately for switch-on and switch-off point
Number of switching cycles	corresponds to the measuring cycle
Signal source device variables	▪ Level linearized ▪ Distance ▪ Terminal voltage ▪ Electronic temperature ▪ Relative echo amplitude ▪ Diagnostic values, Advanced diagnostics
Number of switching cycles	unlimited

Signal on alarm

Depending on the interface, failure information is displayed as follows:
- Current output (for HART devices)
  - Failsafe mode selectable (in accordance with NAMUR Recommendation NE 43):
    Minimum alarm: 3.6 mA
    Maximum alarm (= factory setting): 22 mA
  - Failsafe mode with user-selectable value: 3.59 to 22.5 mA
- Local display
  - Status signal (in accordance with NAMUR Recommendation NE 107)
  - Plain text display
- Operating tool via digital communication (HART, PROFIBUS PA, FOUNDATION Fieldbus) or service interface (CDI)
  - Status signal (in accordance with NAMUR Recommendation NE 107)
  - Plain text display

Linearization

The linearization function of the device allows the conversion of the measured value into any unit of length or volume. Linearization tables for calculating the volume in cylindrical tanks are pre-programmed. Other tables of up to 32 value pairs can be entered manually or semi-automatically.

Galvanic isolation

All circuits for the outputs are galvanically isolated from each other.

Protocol-specific data

HART

Manufacturer ID	17 (0x11)
Device type ID	41 (0x28)
HART specification	6.0
Device description files (DTM, DD)	Information and files under: ▪ www.endress.com ▪ www.hartcomm.org
HART load	Min. 250 Ω
HART device variables	The measured values can be freely assigned to the device variables. **Measured values for PV (primary variable)** ▪ Level linearized ▪ Distance ▪ Electronic temperature ▪ Relative echo amplitude ▪ Analog output adv. diagnostics **Measured values for SV, TV, FV (second, third and fourth variable)** ▪ Level linearized ▪ Distance ▪ Terminal voltage ▪ Electronic temperature ▪ Absolute echo amplitude ▪ Relative echo amplitude ▪ Area of incoupling
Supported functions	▪ Burst mode ▪ Additional transmitter status

Wireless HART data

Minimum start-up voltage	16 V
Start-up current	3.6 mA
Start-up time	40 s
Minimum operating voltage	12.3 V
Multidrop current	3.6 mA
Set-up time	1 s

PROFIBUS PA

Manufacturer ID	17 (0x11)
Ident number	0x1559
Profile version	3.02
GSD file GSD file version	Information and files under: ▪ www.endress.com ▪ www.profibus.org
Output values	**Analog Input:** ▪ Level linearized ▪ Distance ▪ Terminal voltage ▪ Electronic temperature ▪ Absolute echo amplitude ▪ Relative echo amplitude ▪ Analog output advanced diagnostics 1/2 **Digital Input:** ▪ Advanced diagnostic blocks ▪ Status output switch block
Input values	**Analog Output:** ▪ Analog value from PLC (for sensor block external pressure to compensate gas phase effects) ▪ Analog value from PLC to be indicated on the display **Digital Output:** ▪ Extended diagnostic block ▪ Level limiter ▪ Sensor block measurement on ▪ Sensor block save history on ▪ Status output
Supported functions	▪ Identification & Maintenance Einfachste Geräteidentifizierung seitens des Leitsystems und des Typenschildes ▪ Automatic Ident Number Adoption GSD compatibility mode with respect to the preceding product Micropilot M FMR2xx ▪ Physical Layer Diagnostics Installation check of the PRFIBUS segment and the Micropilot FMR5x via the terminal voltage and telegram surveillance. ▪ PROFIBUS Up-/Download Up to 10 times faster writing and reading of parameters via PROFIBUS up-/download ▪ Condensed Status Simple and self-explanatory diagnostic information by categorization of occurring diagnostic messages.

FOUNDATION Fieldbus

Manufacturer ID	0x452B48
Device type	0x1028
Device Revision	0x01
DD Revision CFF Revision	Information and files can be found: ▪ www.endress.com ▪ www.fieldbus.org
Device Tester Version (ITK Version)	6.0.1
ITK Test Campaign Number	IT085300
Link Master (LAS) capable	yes
Link Master / Basic Device selectable	yes; default: Basic Device

Node address	Default: 247 (0xF7)
Features supported	Following methods are supported: ▪ Restart ▪ ENP Restart ▪ Setup ▪ Linearization ▪ Self Check
Virtual Communication Relationships (VCRs)	
Number of VCRs	44
Number of Link Objects in VFD	50
Permanent entries	1
Client VCRs	0
Server VCRs	10
Source VCRs	43
Sink VCRs	0
Subscriber VCRs	43
Publisher VCRs	43
Device Link Capabilities	
Slot time	4
Min. inter PDU delay	8
Max. response delay	20

Transducer Blocks

Block	Content	Output values
Setup Transducer Block	Contains all parameters for a standard commissioning procedure	▪ Level or volume [1] (Channel 1) ▪ Distance (Channel 2)
Advanced Setup Transducer Block	Contains all parameters for a more detailed configuration of the device	no output values
Display Transducer Block	Contains all parameters for the configuration of the display module	no output values
Diagnostic Transducer Block	Contains diagnostic information	no output values
Advanced Diagnostic Transducer Block	Contains parameters for the Advanced Diagnostic	no output values
Expert Configuration Transducer Block	Contains parameters which require detailed knowledge of the functionalities of the device	no output values
Expert Information Transducer Block	Contains information about the state of the device	no output values
Service Sensor Transducer Block	Contains parameters which can only be operated by Endress+Hauser service personnel	no output values
Service Information Transducer Block	Contains information on the state of device which is relevant for service operations	no output values
Data Transfer Transducer Block	Contains parameters which allow to backup the device configuration in the display module and to restore it into the device. Access to these parameters is restricted to the Endress+Hauser service.	no output values

1) depending on the configuration of the block

Function Blocks

Block	Content	Number of permanent blocks	Number of instantiable blocks	Execution time	Functionality
Resource Block	The Resource Block contains all the data that uniquely identifies the field device. It is an electronic version of a nameplate of the device.	1	0	-	enhanced
Analog Input Block	The AI block takes the manufacturer's input data, selected by channel number, and makes it available to other function blocks at its output.	2	3	25 ms	enhanced
Discrete Input Block	The DI block takes a discrete input value (e.g. indication of an level limit), and makes it available to other function blocks at its output.	1	2	20 ms	standard
Mutiple Analog Output Block	This block is used to transfer analog data from the bus into the device	1	0	20 ms	standard
Mutiple Discrete Output Block	This block is used to transfer discrete data from the bus to the device.	1	0	20 ms	standard
PID Block	The PID block serves as proportional-integralderivative controller and is used almost universally to do closed-loop-control in the field including cascade and feedforward.	1	1	25 ms	standard
Arithmetic Block	This block is designed to permit simple use of popular measurement math functions. The user does not have to know how to write equations. The math algorithm is selected by name, chosen by the user for the function to be done.	1	1	25 ms	standard
Signal Characterizer Block	The signal characterizer block has two sections, each with an output that is a non-linear function of the respective input. The non-linear function is determined by a single look-up table with 21 arbitrary x-y pairs.	1	1	25 ms	standard
Input Selector Block	The input selector block provides selection of up to four inputs and generates an output based on the configured action. This block normally receives its inputs from AI blocks. The block performs maximum, minimum, middle, average and 'first good' signal selection.	1	1	25 ms	standard

Block	Content	Number of permanent blocks	Number of instantiable blocks	Execution time	Functionality
Integrator Block	The Integrator Function Block integrates a variable as a function of the time or accumulates the counts from a Pulse Input block. The block may be used as a totalizer that counts up until reset or as a batch totalizer that has a setpoint, where the integrated or accumulated value is compared to pre-trip and trip settings, generating discrete signals when these settings are reached.	1	1	25 ms	standard
Analog Alarm Block		1	1	25 ms	standard

Up to 20 blocks can be instantiated in the device altogether, including the blocks already instantiated on delivery.

Power supply

Terminal assignment

2-wire: 4-20mA HART

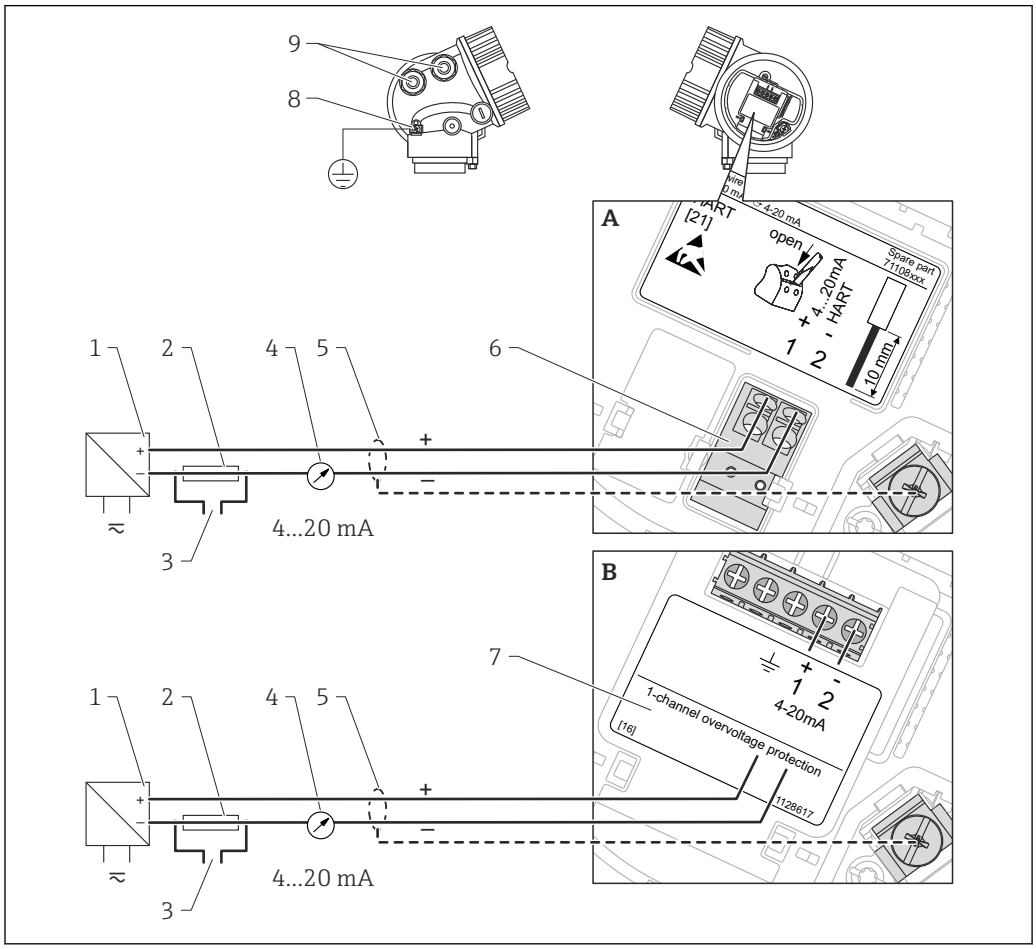

2 Terminal assignment 2-wire; 4-20mA HART

A Without integrated overvoltage protection
B With integrated overvoltage protection
1 Active barrier with power supply (e.g. RN221N): Observe terminal voltage
2 HART communication resistor (≥250 Ω): Observe maximum load
3 Connection for Commubox FXA195 or FieldXpert SFX350/SFX370 (via VIATOR Bluetooth modem)
4 Analog display device: Observe maximum load
5 Cable screen; observe cable specification
6 4-20mA HART (passive): Terminals 1 and 2
7 Overvoltage protection module
8 Terminal for potential equalization line
9 Cable entry

2-wire: 4-20mA HART, switch output

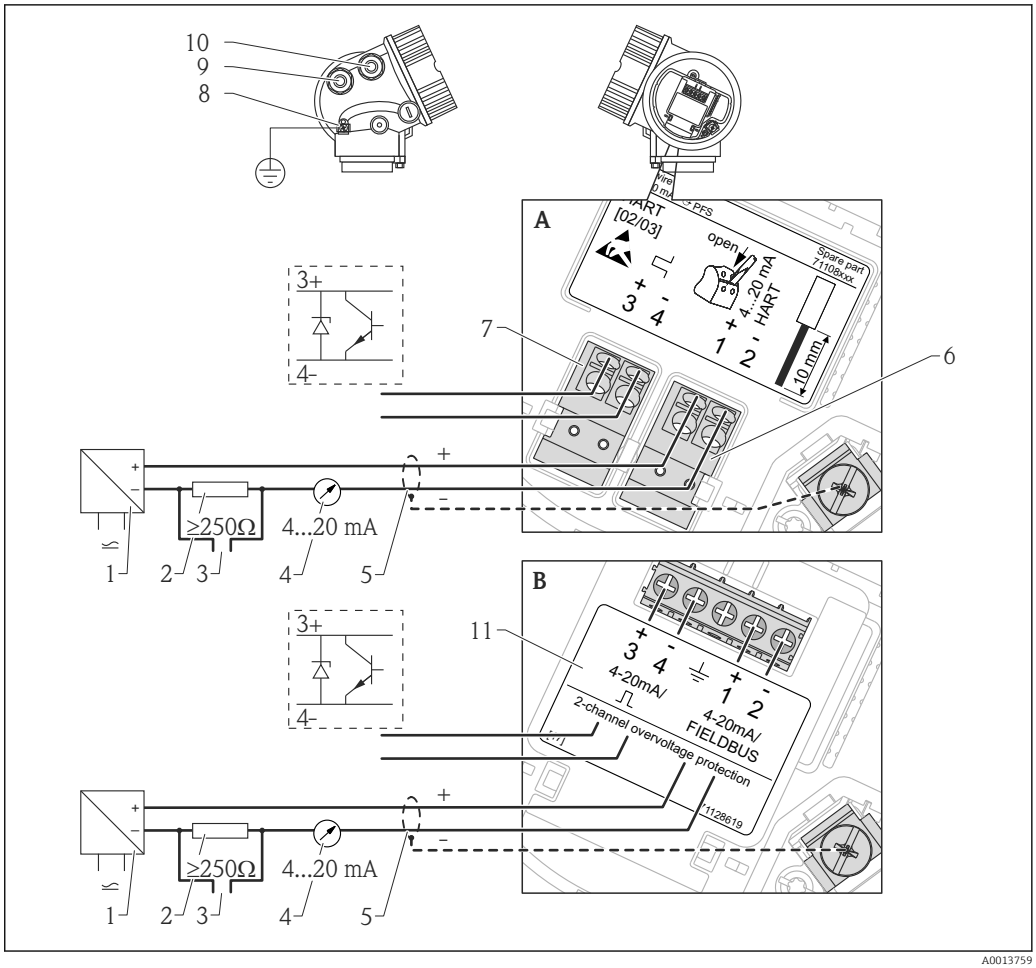

3 Terminal assignment 2-wire; 4-20mA HART, switch output

A Without integrated overvoltage protection
B With integrated overvoltage protection
1 Active barrier with power supply (e.g. RN221N): Observe terminal voltage
2 HART communication resistor (≥250 Ω): Observe maximum load
3 Connection for Commubox FXA195 or FieldXpert SFX350/SFX370 (via VIATOR Bluetooth modem)
4 Analog display device: Observe maximum load
5 Cable screen; observe cable specification
6 4-20mA HART (passive): Terminals 1 and 2
7 Switch output (open collector): Terminals 3 and 4
8 Terminal for potential equalization line
9 Cable entry for 4-20mA HART line
10 Cable entry for switch output line
11 Overvoltage protection module

2-wire: 4-20mA HART, 4-20mA

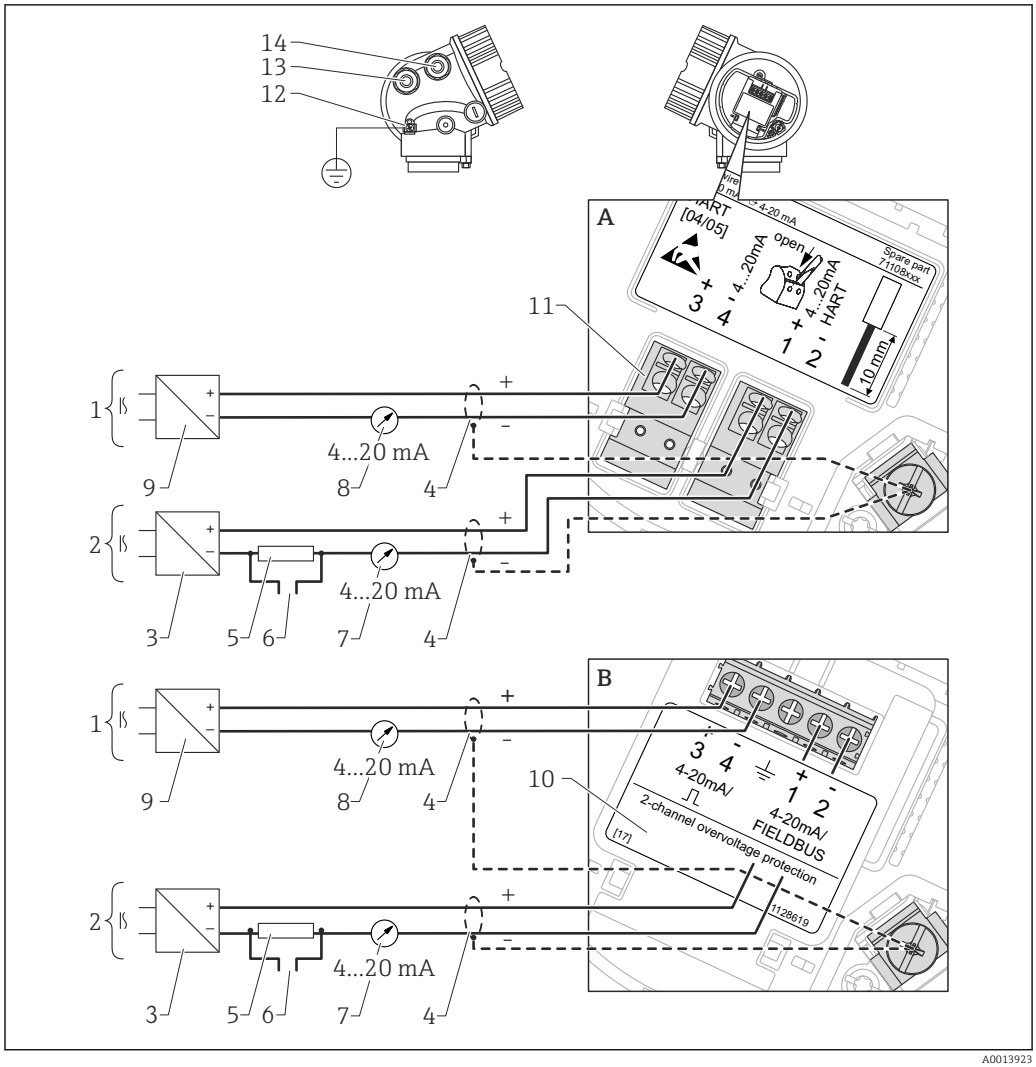

4 *Terminal assignment 2-wire, 4-20 mA HART, 4...20mA*

A Without integrated overvoltage protection
B With integrated overvoltage protection
1 Connection current output 2
2 Connection current output 1
3 Supply voltage for current output 1 (e.g. RN221N); Observe terminal voltage
4 Cable screen; observe cable specification
5 HART communication resistor (≥250 Ω): Observe maximum load
6 Connection for Commubox FXA195 or FieldXpert SFX350/SFX370 (via VIATOR Bluetooth modem)
7 Analog display device ; observe maximum load
8 Analog display device ; observe maximum load
9 Supply voltage for current output 2 (e.g. RN221N); Obeserve terminal voltage
10 Overvoltage protection module
11 Current output 2: Terminals 3 and 4
12 Terminal for the potential equalization line
13 Cable entry for current output 1
14 Cable entry for current output 2

This version is also suited for single-channel operation. In this case, current output 1 (terminals 1 and 2) must be used.

4-wire: 4-20mA HART (10.4 to 48 V_{DC})

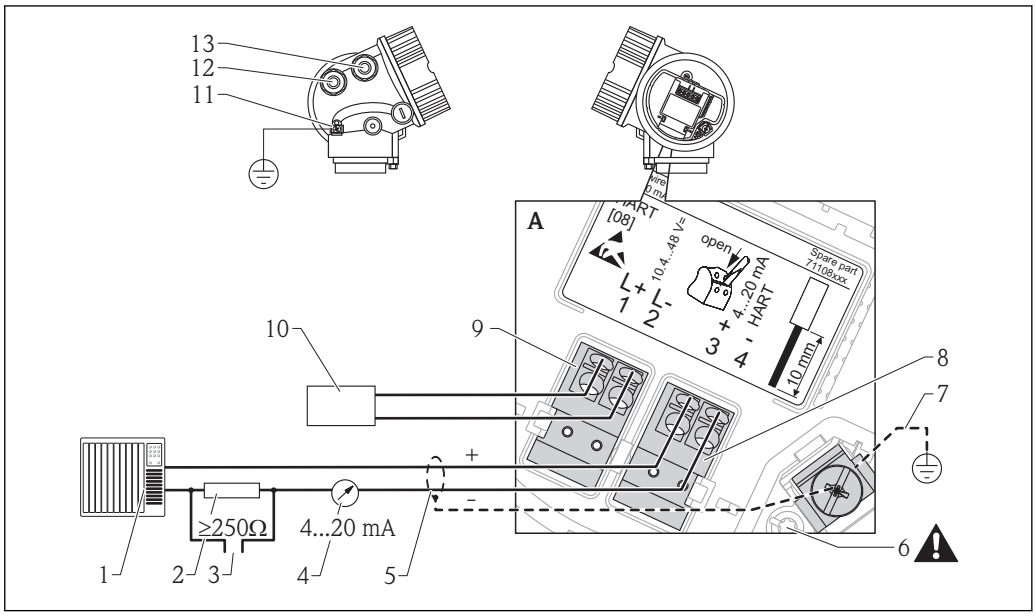

5 *Terminal assignment 4-wire; 4-20mA HART (10.4 to 48 VDC)*

1 *Evaluation unit, e.g. PLC*
2 *HART communication resistor (≥250 Ω): Observe maximum load*
3 *Connection for Commubox FXA195 or FieldXpert SFX350/SFX370 (via VIATOR Bluetooth modem)*
4 *Analog display device: Observe maximum load*
5 *Signal cable including screening (if required), observe cable specification*
6 *Protective connection; do not disconnect!*
7 *Protective earth, observe cable specification*
8 *4...20mA HART (active): Terminals 3 and 4*
9 *Supply voltage: Terminals 1 and 2*
10 *Supply voltage: Observe terminal voltage, observe cable specification*
11 *Terminal for potential equalization*
12 *Cable entry for signal line*
13 *Cable entry for power supply*

4-wire: 4-20mA HART (90 to 253 V_{AC})

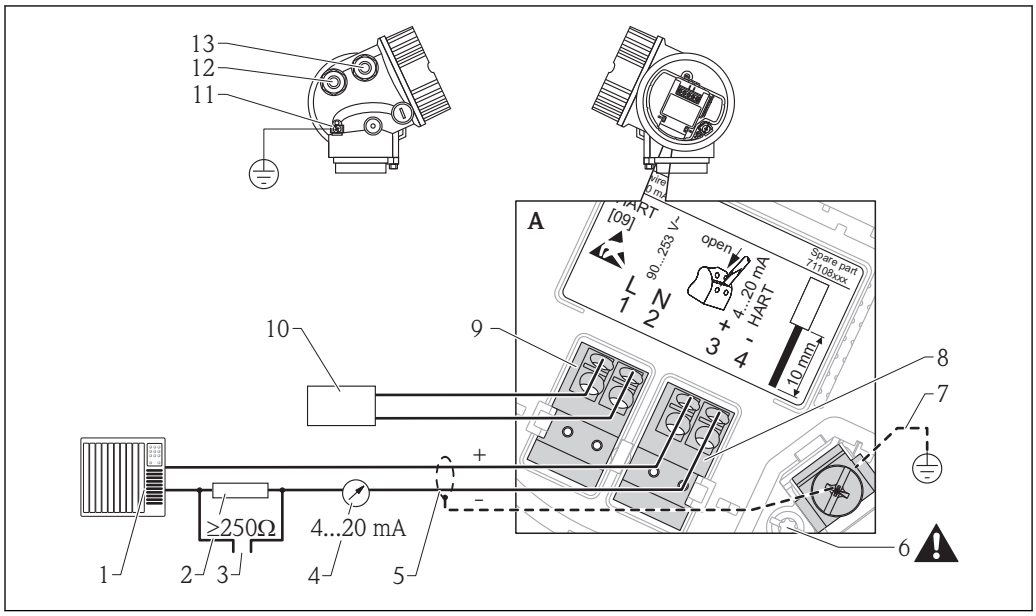

6 *Terminal assignment 4-wire; 4-20mA HART (90 to 253 VAC)*

1 *Evaluation unit, e.g. PLC*
2 *HART communication resistor (≥250 Ω): Observe maximum load*
3 *Connection for Commubox FXA195 or FieldXpert SFX350/SFX370 (via VIATOR Bluetooth modem)*
4 *Analog display device: Observe maximum load*
5 *Signal cable including screening (if required), observe cable specification*
6 *Protective connection; do not disconnect!*
7 *Protective earth, observe cable specification*
8 *4...20mA HART (active): Terminals 3 and 4*
9 *Supply voltage: Terminals 1 and 2*
10 *Supply voltage: Observe terminal voltage, observe cable specification*
11 *Terminal for potential equalization*
12 *Cable entry for signal line*
13 *Cable entry for power supply*

⚠ CAUTION

To ensure electrical safety:

- ▶ Do not disconnect the protective connection (6).
- ▶ Disconnect the supply voltage before disconnecting the protective earth (7).

Connect protective earth to the internal ground terminal (7) before connecting the supply voltage. If necessary, connect the potential matching line to the external ground terminal (11).

In order to ensure electromagnetic compatibility (EMC): Do not only ground the device via the protective earth conductor of the supply cable. Instead, the functional grounding must also be connected to the process connection (flange or threaded connection) or to the external ground terminal.

An easily accessible power switch must be installed in the proximity of the device. The power switch must be marked as a disconnector for the device (IEC/EN61010).

PROFIBUS PA / FOUNDATION Fieldbus

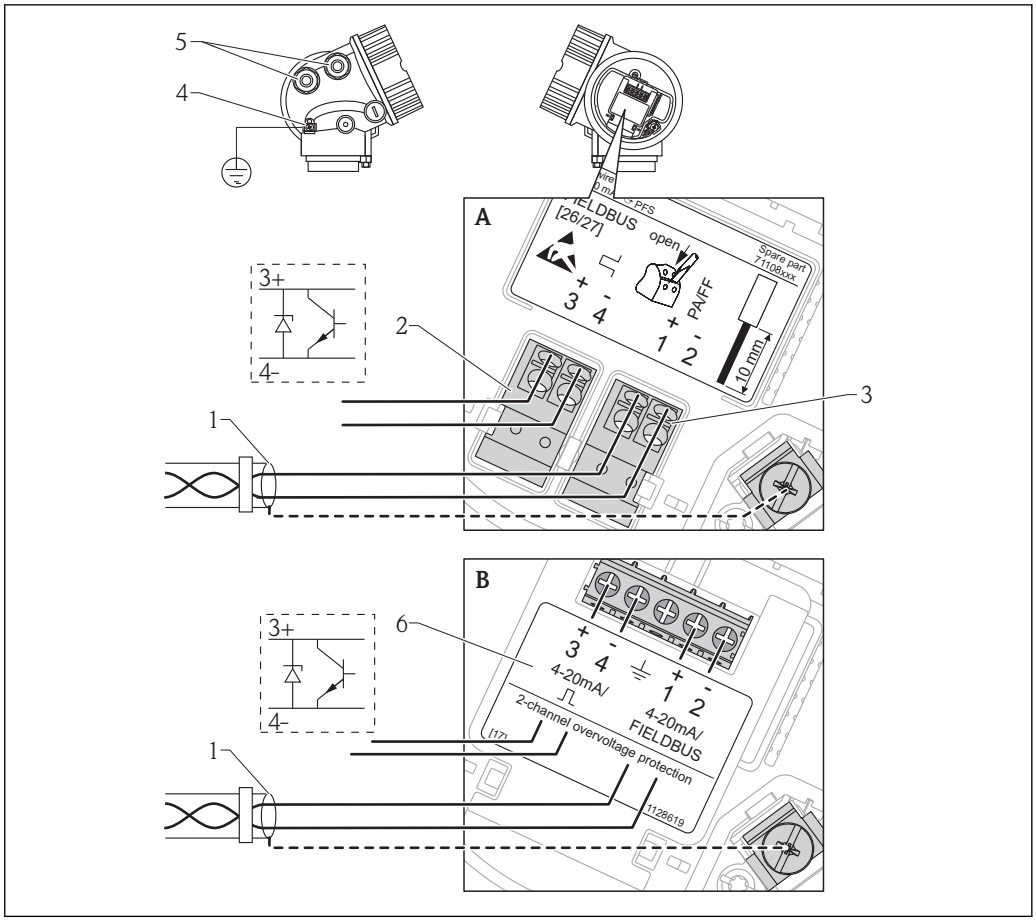

7 *Terminal assignment PROFIBUS PA / FOUNDATION Fieldbus*

A Without integrated overvoltage protection
B With integrated overvoltage protection
1 Cable screen: Observe cable specifications
2 Switch output (open collector): Terminals 3 and 4
3 PROFIBUS PA / FOUNDATION Fieldbus: Terminals 1 and 2
4 Terminal for potential equalization line
5 Cable entries
6 Overvoltage protection module

Connection examples for the switch output

For HART devices, the switch output is available as an option. See product structure, feature 20: "Power Supply, Output", option B: "2-wire; 4-20mA HART, switch output"

Devices with PROFIBUS PA and FOUNDATION Fieldbus always have a switch output.

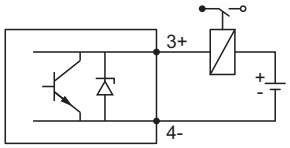

A0015909

8 Connection of a relay

Suitable relays (examples):
- Solid-state relay: Phoenix Contact OV-24DC/480AC/5 with mounting rail connector UMK-1 OM-R/AMS
- Electromechanical relay: Phoenix Contact PLC-RSC-12DC/21

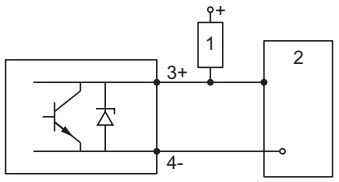

A0015910

9 Connection of a digital input

1 Pull-up resistor
2 Digital input

For optimum interference immunity we recommend to connect an external resistor (internal resistance of the relay or Pull-up resistor) of < 1 000 Ω.

Device plug connectors

For the versions with fieldbus plug connector (M12 or 7/8"), the signal line can be connected without opening the housing.

Pin assignment of the M12 plug connector

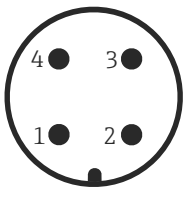

Pin	Meaning
1	Signal +
2	not connected
3	Signal -
4	Ground

Pin assignment of the 7/8" plug connector

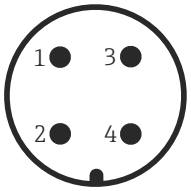

Pin	Meaning
1	Signal -
2	Signal +
3	Not connected
4	Screen

Supply voltage

An external power supply is required.

Various supply units can be ordered from Endress+Hauser: see "Accessories" section → 82

2-wire, 4-20mA HART, passive

"Power Supply, Output" [1]	"Approval" [2]	Terminal voltage U at the device	Maximum load R, depending on the supply voltage U_0 at the supply unit
A: 2-wire; 4-20mA HART	▪ Non-Ex ▪ Ex nA ▪ Ex ic ▪ CSA GP	10.4 to 35 V [3]	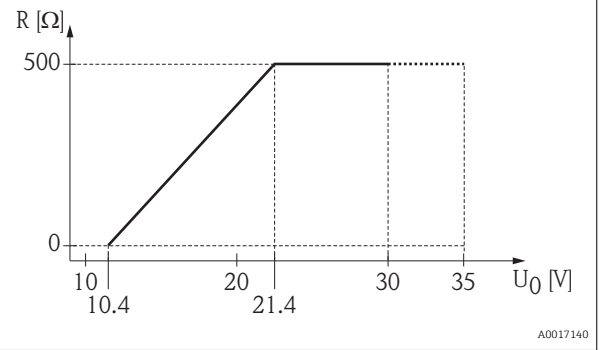
	Ex ia / IS	10.4 to 30 V [3]	
	▪ Ex d(ia) / XP ▪ Ex ic(ia) ▪ Ex nA(ia) ▪ Ex ta / DIP	12 to 35 V [4]	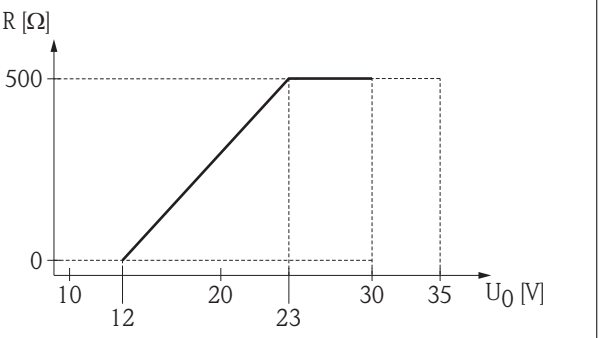
	Ex ia + Ex d(ia) / IS + XP	12 to 30 V [4]	

1) Feature 020 of the product structure
2) Feature 010 of the product structure
3) For ambient temperatures $T_a \leq$ -20 °C (-4 °F) a minimum voltage of 15 V is required for the sartup of the device at the MIN error current (3,6 mA). The startup current can be parametrized. If the device is operated with a fixed current I ≥ 5,5 mA (HART multidrop mode), a voltage of U ≥ 10,4 V is sufficient throughout the entire range of ambient temperatures.
4) For ambient temperatures $T_a \leq$ -20 °C (-4 °F) a minimum voltage of 16 V is required for the startup of the device at the MIN error current (3.6 mA).

"Power Supply, Output" [1]	"Approval" [2]	Terminal voltage U at the device	Maximum load R, depending on the supply voltage U_0 at the supply unit
B: 2-wire; 4-20 mA HART, switch output	▪ Non-Ex ▪ Ex nA ▪ Ex nA(ia) ▪ Ex ic ▪ Ex ic(ia) ▪ Ex d(ia) / XP ▪ Ex ta / DIP ▪ CSA GP	12 to 35 V [3]	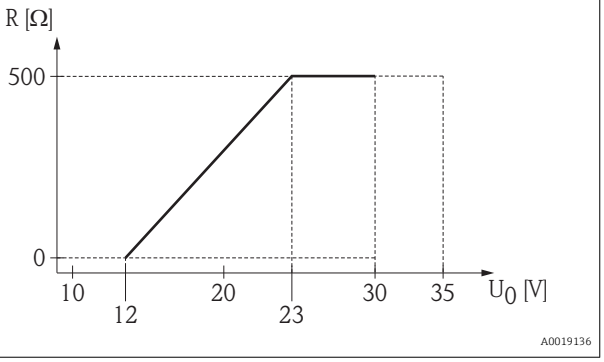
	▪ Ex ia / IS ▪ Ex ia + Ex d(ia) / IS + XP	12 to 30 V [3]	

1) Feature 020 of the product structure
2) Feature 010 of the product structure
3) For ambient temperatures $T_a \leq$ -30 °C (-22 °F) a minimum voltage of 16 V is required for the startup of the device at the MIN error current (3.6 mA).

"Power Supply, Output" [1]	"Approval" [2]	Terminal voltage U at the device	Maximum load R, depending on the supply voltage U_0 at the supply unit
C: 2-wire; 4-20mA HART, 4-20mA	any	12 to 30 V [3]	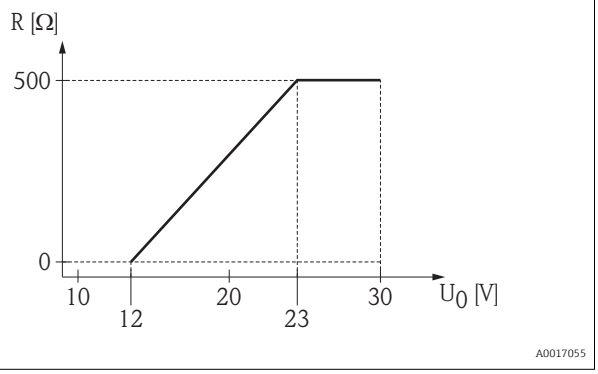

1) Feature 020 of the product structure
2) Feature 010 of the product structure
3) For ambient temperatures $T_a \leq$ -30 °C (-22 °F) a minimum voltage of 16 V is required for the startup of the device at the MIN error current (3.6 mA).

Polarity reversal protection	Yes
Admissible residual ripple at f = 0 to 100 Hz	U_{SS} < 1 V
Admissible residual ripple at f = 100 to 10000 Hz	U_{SS} < 10 mV

4-wire, 4-20mA HART, active

"Power supply; Output" [1]	Terminal voltage	Maximum load R_{max}
K: 4-wire 90-253VAC; 4-20mA HART	90 to 253 V_{AC} (50 to 60 Hz), overvoltage category II	500 Ω
L: 4-wire 10,4-48VDC; 4-20mA HART	10.4 to 48 V_{DC}	

1) Feature 020 of the product structure

PROFIBUS PA, FOUNDATION Fieldbus

"Power supply; Output" [1]	"Approval" [2]	Terminal voltage
E: 2-wire; FOUNDATION Fieldbus, switch output **G:** 2-wire; PROFIBUS PA, switch output	▪ Non-Ex ▪ Ex nA ▪ Ex nA(ia) ▪ Ex ic ▪ Ex ic(ia) ▪ Ex d(ia) / XP ▪ Ex ta / DIP ▪ CSA GP	9 to 32 V [3]
	▪ Ex ia / IS ▪ Ex ia + Ex d(ia) / IS + XP	9 to 30 V [3]

1) Feature 020 of the product structure
2) Feature 010 of the product structure
3) Input voltages up to 35 V will not spoil the device.

Polarity sensitive	No
FISCO/FNICO compliant according to IEC 60079-27	Yes

Power consumption

"Power supply; Output" [1]	Power consumption
A: 2-wire; 4-20mA HART	< 0.9 W
B: 2-wire; 4-20mA HART, switch output	< 0.9 W
C: 2-wire; 4-20mA HART, 4-20mA	< 2 x 0.7 W
K: 4-wire 90-253VAC; 4-20mA HART	6 VA
L: 4-wire 10,4-48VDC; 4-20mA HART	1.3 W

1) Feature 020 of the product structure

Current consumption

HART

Nominal current	3.6 to 22 mA, the start-up current for multidrop mode can be parametrized (is set to 3.6 mA on delivery)
Breakdown signal (NAMUR NE43)	adjustable: 3.59 to 22.5 mA

PROFIBUS PA

Nominal current	14 mA
Error current FDE (Fault Disconnection Electronic)	0 mA

FOUNDATION Fieldbus

Device basic current	15 mA
Error current FDE (Fault Disconnection Electronic)	0 mA

FISCO

U_i	17.5 V
I_i	550 mA
P_i	5.5 W
C_i	5 nF
L_i	10 µH

Power supply failure

- Configuration is retained in the HistoROM (EEPROM).
- Error messages (incl. value of operated hours counter) are stored.

Potential equalization

No special measures for potential equalization are required.

If the device is designed for hazardous areas, observe the information in the documentation "Safety Instructions" (XA, ZD).

Terminals

- **Without integrated overvoltage protection**
  Plug-in spring terminals for wire cross-sections 0.5 to 2.5 mm² (20 to 14 AWG)
- **With integrated overvoltage protection**
  Screw terminals for wire cross-sections 0.2 to 2.5 mm² (24 to 14 AWG)

Cable entries

Connection of power supply and signal line

To be selected in feature 050 "Electrical connection"

- Gland M20; Material dependent on the approval:
  - For Non-Ex, ATEX, IECEx, NEPSI Ex ia/ic:
    Plastics M20x1.5 for cable Φ 5 to 10 mm (0.2 to 0.39 in)
  - For Dust-Ex, FM IS, CSA IS, CSA GP, Ex nA:
    Metal M20x1.5 for cable Φ 7 to 10 mm (0.28 to 0.39 in) [1)]
  - For Ex d:
    No gland available
- Thread
  - ½" NPT
  - G ½"
  - M20 × 1.5
- Plug M12 / Plug 7/8"
  Only available for Non-Ex, Ex ic, Ex ia

Connection of remote display FHX50

Dependent on feature 030: "Display, Operation":

- "Prepared for display FHX50 + M12 connection":
  M12 socket
- "Prepared for display FHX50 + custom connection":
  Thread M16

Cable specification

- Minimum cross-section: dependent on terminals → 🖹 29
- For ambient temperature $T_U \geq 60$ °C (140 °F): use cable for temperature T_U +20 K.

1) The material of the gland is dependent on the housing type; GT18 (stainless steel housing): 316L (1.4404); GT19 (plastic housing) and GT20 (aluminum housing): nickel-coated brass (CuZn).

HART

- A normal device cable suffices if only the analog signal is used.
- A shielded cable is recommended if using the HART protocol. Observe grounding concept of the plant.
- For 4-wire devices: Standard device cable is sufficient for the power line.

PROFIBUS

Use a twisted, screened two-wire cable, preferably cable type A.

For further information on the cable specifications, see Operating Instructions BA00034S "Guidelines for planning and commissioning PROFIBUS DP/PA", PNO Guideline 2.092 "PROFIBUS PA User and Installation Guideline" and IEC61158-2 (MBP).

FOUNDATION Fieldbus

Endress+Hauser recommends using twisted, shielded two-wire cables.

For further information on the cable specifications, see Operating Instructions BA00013S "FOUNDATION Fieldbus Overview", FOUNDATION Fieldbus Guideline and IEC 61158-2 (MBP).

Overvoltage protection

If the measuring device is used for level measurement in flammable liquids which requires the use of overvoltage protection according to DIN EN 60079-14, standard for test procedures 60060-1 (10 kA, pulse 8/20 µs), overvoltage protection has to be ensured by an integrated or external overvoltage protection module.

Integrated overvoltage protection

An integrated overvoltage protection module is available for 2-wire HART as well as PROFIBUS PA and FOUNDATION Fieldbus devices.

Product structure: Feature 610 "Accessory mounted", option NA "Overvoltage protection".

Technical data	
Resistance per channel	2 * 0.5 Ω max
Threshold DC voltage	400 to 700 V
Threshold impulse voltage	< 800 V
Capacitance at 1 MHz	< 1.5 pF
Nominal arrest impulse voltage (8/20 µs)	10 kA

External overvoltage protection

HAW562 or HAW569 from Endress+Hauser are suited as external overvoltage protection.

For detailed information please refer to the following documents:
- HAW562: TI01012K
- HAW569: TI01013K

Performance characteristics

Reference operating conditions

- Temperature = +24 °C (+75 °F) ±5 °C (±9 °F)
- Pressure = 960 mbar abs. (14 psia) ±100 mbar (±1.45 psi)
- Humidity = 60 % ±15 %
- Reflector: metal plate with a minimum diameter of 1 m (40 in)
- No major interference reflections inside the signal beam

Maximum measured error

Typical data under reference operating conditions: DIN EN 61298-2, percentage values in relation to the span.

Device	Value	Output	
		digital	analog [1]
FMR50 Standard version	Sum of non-linearity, nonrepeatability and hysteresis	± 2 mm (0.08 in)	± 0.02 %
	Offset/Zero	± 4 mm (0.2 in)	± 0.03 %
FMR50 Version with application package "Advanced dynamics" [2]	Sum of non-linearity, nonrepeatability and hysteresis	± 3 mm (0.12 in)	± 0.02 %
	Offset/Zero	± 4 mm (0.2 in)	± 0.03 %

1) Only relevant for 4-20mA current output; add error of the analog value to the digital value.
2) Product structure: Feature 540 "Application Package", Option EM "Advanced dynamics"

Differing values in near-range applications

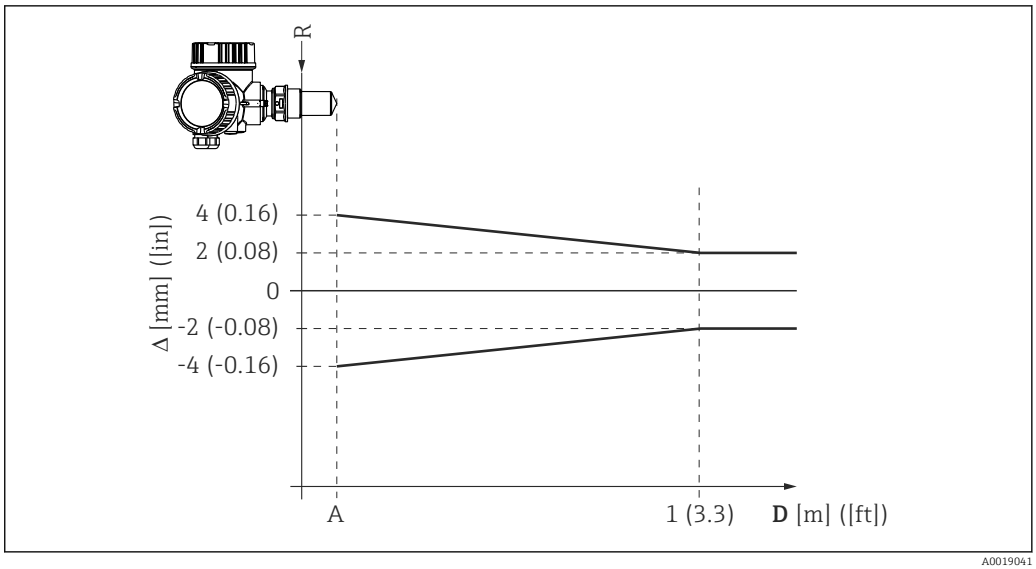

10 Maximum measured error in near-range applications; values for standard version

Δ Maximum measured error
A Lower edge of the antenna
D Distance from the lower edge A of the antenna
R Reference point of the distance measurement

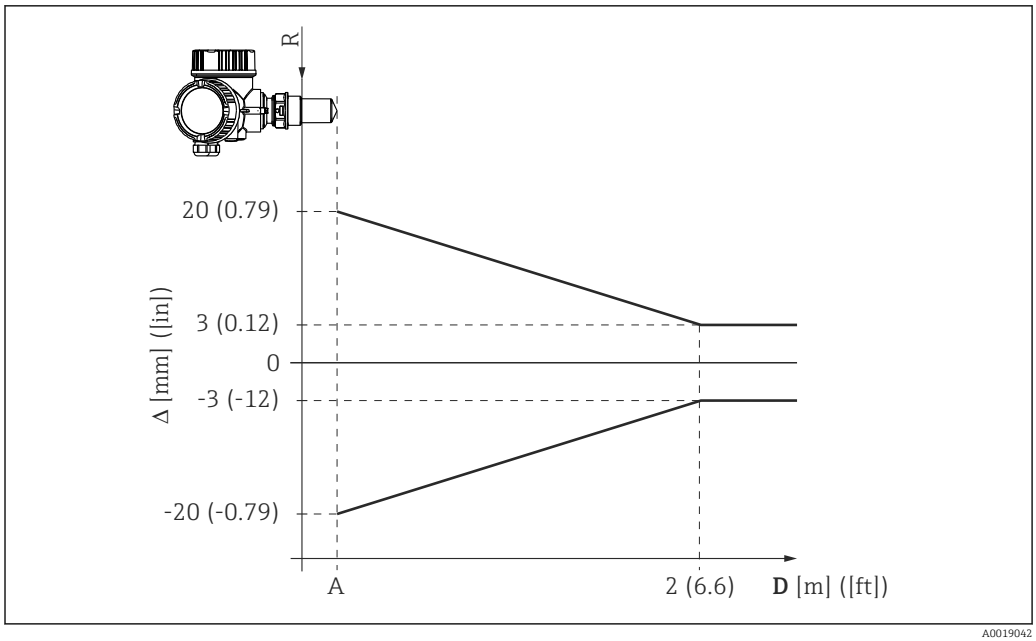

11 Maximum measured error in near-range applications; values for version with the "Advanced dynamics" application package

Δ Maximum measured error
A Lower edge of the antenna
D Distance from the lower edge A of the antenna
R Reference point of the distance measurement

Measured value resolution

Dead band according to EN61298-2:

- digital: 1 mm
- analog: 1 µA

Reaction time

The reaction time can be parametrized. The following step response times (as per DIN EN 61298-2) [2] are valid if the damping is switched off:

Tank height	Sampling rate	Step response time
< 10 m (33 ft)	≥ 3.6 s^{-1}	< 0.8 s
< 40 m (132 ft)	≥ 2.7 s^{-1}	< 1 s

Influence of ambient temperature

The measurements are carried out in accordance with EN 61298-3

- Digital (HART, PROFIBUS PA, FOUNDATION Fieldbus):
  - Standard version: average T_K = 2 mm/10 K; maximum 5 mm
  - Version with advanced dynamics [3]: average T_K = 5 mm/10 K; maximum 15 mm
- Analog (current output):
  - zero point (4 mA): average T_K = 0.02 %/10 K
  - span (20 mA): average T_K = 0.05 %/10 K

2) According to DIN EN 61298-2 the response time is the time which passes after a sudden change of the input signal until the output signal for the first time assumes 90% of the steady-state value.
3) Feature 540 "Application Package", option EM

Installation

Installation conditions

Mounting position

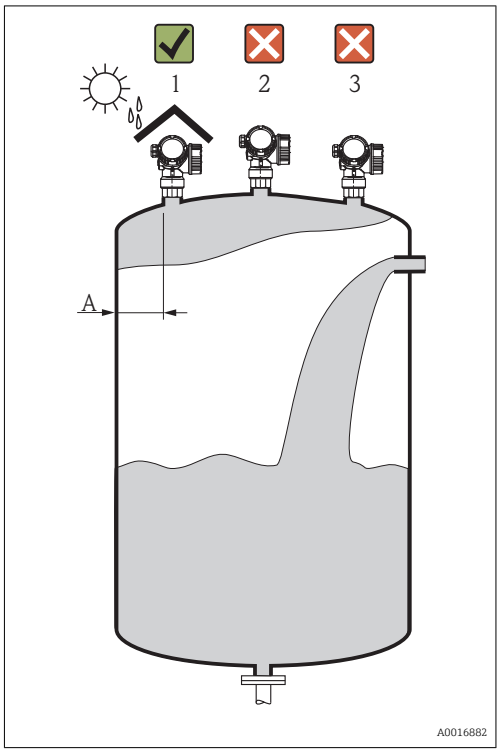

- Recommended distance **A** from wall to outer edge of nozzle: ~ 1/6 of tank diameter. Nevertheless the device should not be installed closer than 15 cm (5.91 in) to the tank wall.
- Not in the center (2), as interference can cause signal loss.
- Not above the fill stream (3).
- It is recommended to us a weather protection cover (1) in order to protect the device from direct sun or rain.

Vessel installations

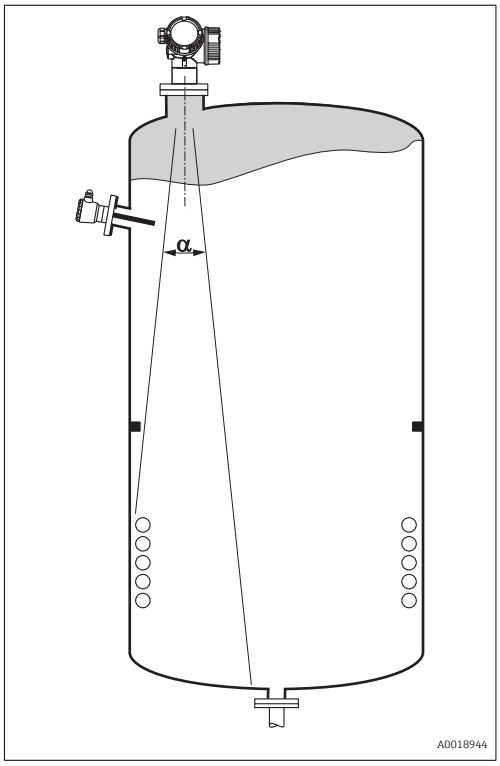

Avoid any installations (point level switches, temperature sensors, braces, vacuum rings, heating coils, baffles etc.) inside the signal beam. Take into account the beam angle → 35.

Reduction of interference echoes

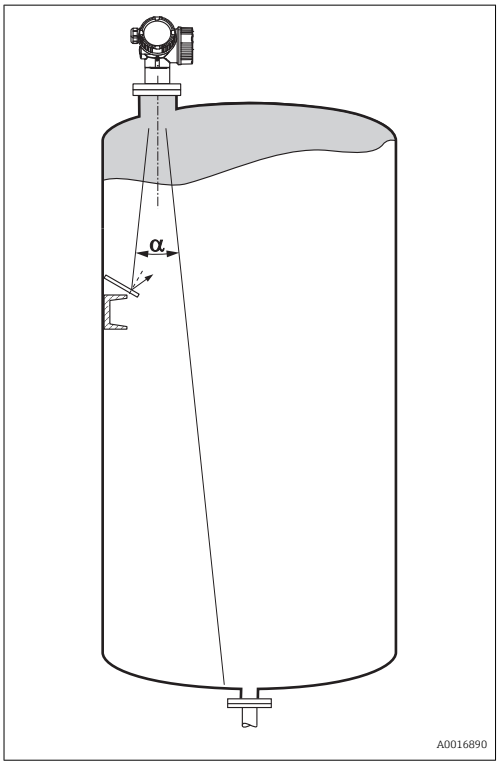

Metallic screens mounted at a slope spread the radar signal and can, therefore, reduce interference echoes.

Measurement in a plastic vessel

If the outer wall of the vessel is made of a non-conductive material (e.g. GRP), microwaves can also be reflected off interfering installations outside the signal beam (e.g. metallic pipes (1), ladders (2), grates (3), ...). Therefore, there should be no such interfering installations in the signal beam. Please contact Endress+Hauser for further information.

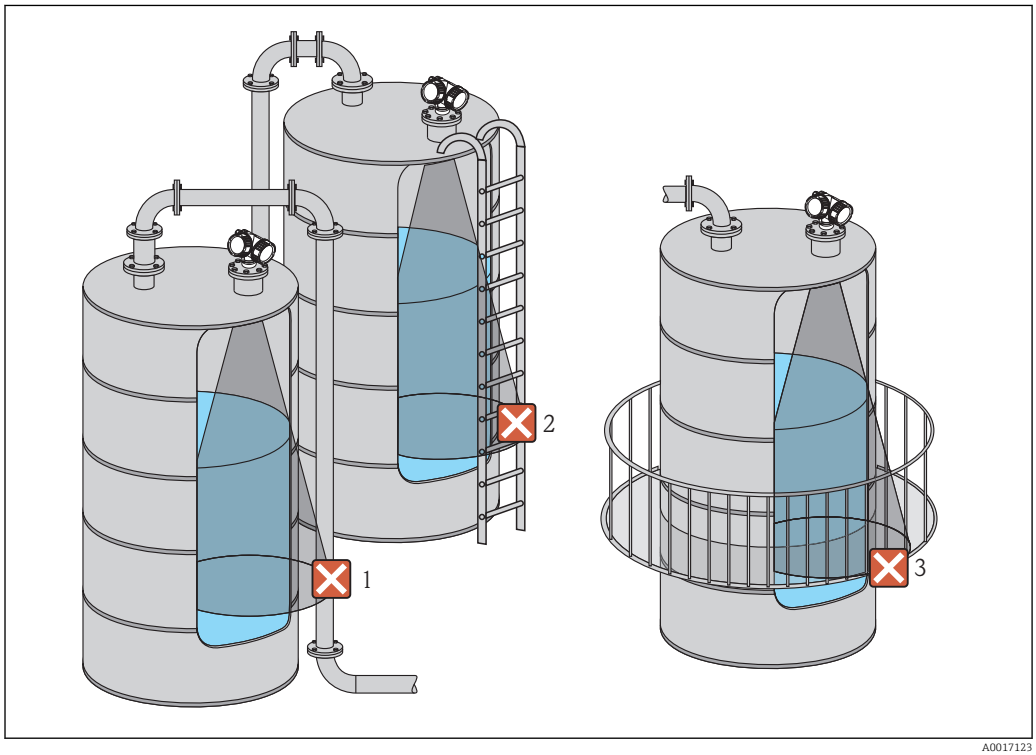

Optimization options

- Antenna size
  The bigger the antenna, the smaller the beam angle α and the fewer interference echoes → 📄 35.
- Mapping
  The measurement can be optimized by means of electronic suppression of interference echoes.
- Antenna alignment
  Take into account the marker on the flange or threaded connection → 📄 37 → 📄 38 .
- Stilling well
  A stilling well can be applied to avoid interferences → 📄 41.
- Metallic screens mounted at a slope
  They spread the radar signals and can, therefore, reduce interference echoes.

Beam angle

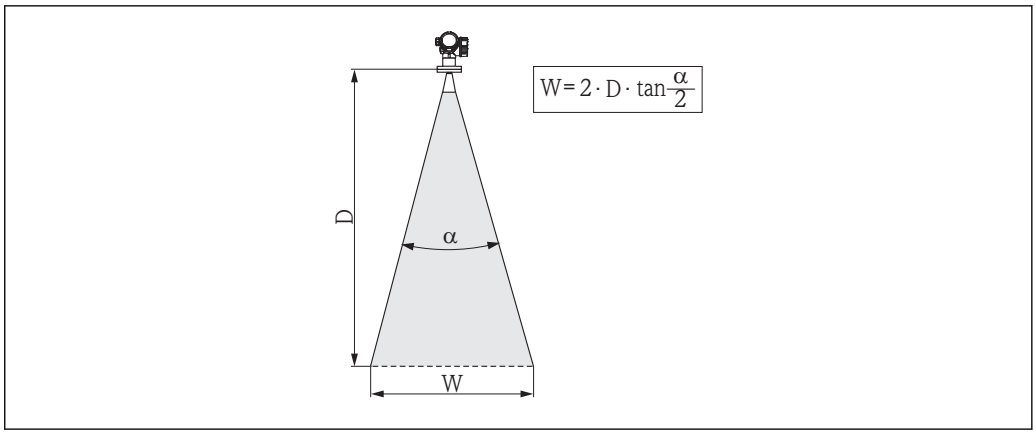

12 Relationship between beam angle α, distance D and beamwidth diameter W

The beam angle is defined as the angle α where the energy density of the radar waves reaches half the value of the maximum energy density (3-dB-width). Microwaves are also emitted outside the signal beam and can be reflected off interfering installations.

Beam diameter **W** as a function of beam angle **α** and measuring distance **D**:

FMR50			
Antenna size	40 mm (1½ in)	80 mm (3 in)	100 mm (4 in)
Beam angle α	23°	10°	8°
Measuring distance (D)	**Beamwidth diameter W**		
3 m (9.8 ft)	1.22 m (4 ft)	0.53 m (1.7 ft)	0.42 m (1.4 ft)
6 m (20 ft)	2.44 m (8 ft)	1.05 m (3.4 ft)	0.84 m (2.8 ft)
9 m (30 ft)	3.66 m (12 ft)	1.58 m (5.2 ft)	1.26 m (4.1 ft)
12 m (39 ft)	4.88 m (16 ft)	2.1 m (6.9 ft)	1.68 m (5.5 ft)
15 m (49 ft)	6.1 m (20 ft)	2.63 m (8.6 ft)	2.10 m (6.9 ft)
20 m (66 ft)	8.14 m (27 ft)	3.50 m (11 ft)	2.80 m (9.2 ft)
25 m (82 ft)	10.17 m (33 ft)	4.37 m (14 ft)	3.50 m (11 ft)
30 m (98 ft)	-	5.25 m (17 ft)	4.20 m (14 ft)
35 m (115 ft)	-	6.12 m (20 ft)	4.89 m (16 ft)
40 m (131 ft)	-	7.00 m (23 ft)	5.59 m (18 ft)

Measuring conditions

- In case of **boiling surfaces**, **bubbling** or tendency for **foaming** use FMR53 or FMR54. Depending on its consistence, foam can either absorb microwaves or reflect them off the foam surface. Measurement is possible under certain conditions. For FMR50, FMR51 and FMR52, the additional option "Advanced dynamics" is recommended in these cases (feature 540: "Application Package", option EM).
- In case of heavy **steam development** or **condensate**, the maximum measuring range of FMR50, FMR51 and FMR52 may decrease depending on density, temperature and composition of the steam → use FMR53 or FMR54.
- For the measurement of absorbing gases such as **ammonia NH_3** or some **fluorocarbons** [4], please use Levelflex or Micropilot FMR54 in a stilling well.
- The measuring range begins, where the beam hits the tank bottom. Particularly with dish bottoms or conical outlets the level cannot be detected below this point.
- For stilling well applications, the zero should be positioned at the end of the tube, as the electromagnetic waves do not propagate completely outside the tube. It must be taken into account that the accuracy may be reduced in the area **C**. In order to guarantee the required accuracy in these cases, it is recommended to position the zero-point at a distance **C** above the end of the tube (see figure).
- In case of media with a low dielectric constant (ε_r = 1.5 to 4) [5] the tank bottom can be visible through the medium at low levels (low height **C**). Reduced accuracy has to be expected in this range. If this is not acceptable, we recommend positioning the zero point at a distance **C** (see figure) above the tank bottom in these applications.
- In principle it is possible to measure up to the tip of the antenna with FMR51, FMR53 and FMR54. However, due to considerations regarding corrosion and build-up, the end of the measuring range should not be chosen any closer than **A** (see figure) to the tip of the antenna.
- When using FMR54 with planar antenna, especially for media with low dielectric constants, the end of the measuring range should not be closer than **A: 1 m (3.28 ft)** to the flange.
- The smallest possible measuring range **B** depends on the antenna version (see figure).
- The tank height should be at least **H** (see table).

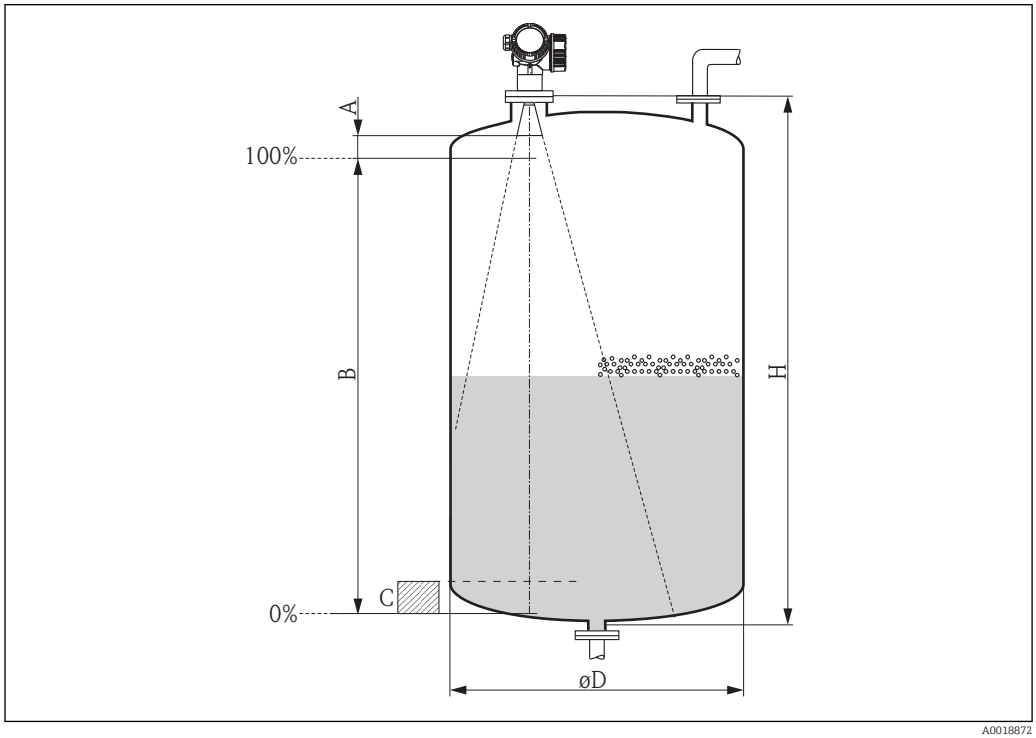

A0018872

Device	A [mm (in)]	B [m (ft)]	C [mm (in)]	H [m (ft)]
FMR50	150 (5.91)	> 0.2 (0.7)	50 to 250 (1.97 to 9.84)	> 0.3 (1.0)

4) Affected compounds are e.g. R134a, R227, Dymel 152a.

5) Dielectric constants of important media commonly used in various industries are summarized in the DC manual (CP01076F) and in the Endress +Hauser "DC Values App" (available for Android and iOS).

Installation in vessel (free space)

Horn antenna encapsulated (FMR50)

Alignment

- Align the antenna vertically to the product surface.
- A marking at the threaded connection enables alignment of the antenna. This marking must be aligned towards the tank wall as well as possible.

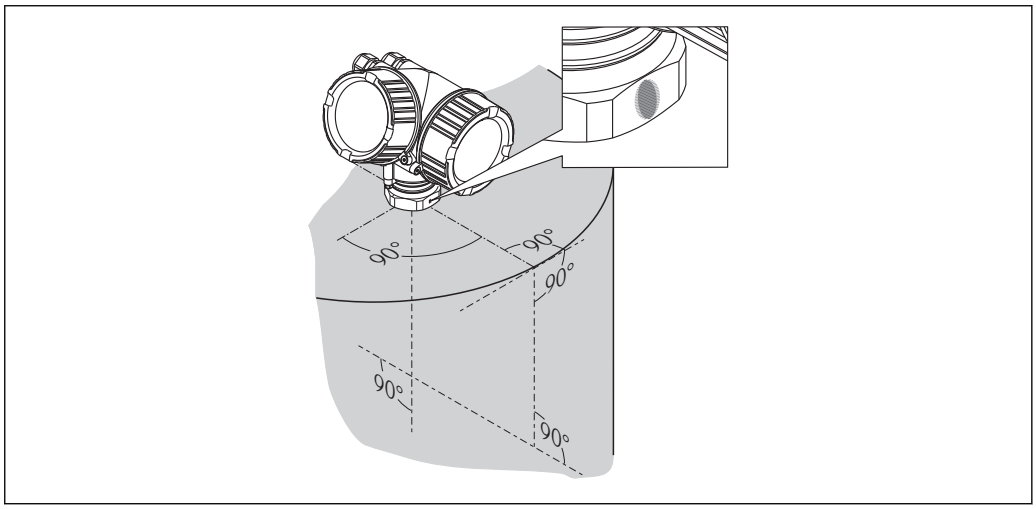

A0019434

Depending on the device version the marking may be a circle or two short parallel lines.

Nozzle mounting

For optimum measurement, the tip of the antenna should extend below the nozzle. This is achieved by a nozzle height up to H_{max} = 60 mm (2.36 in).

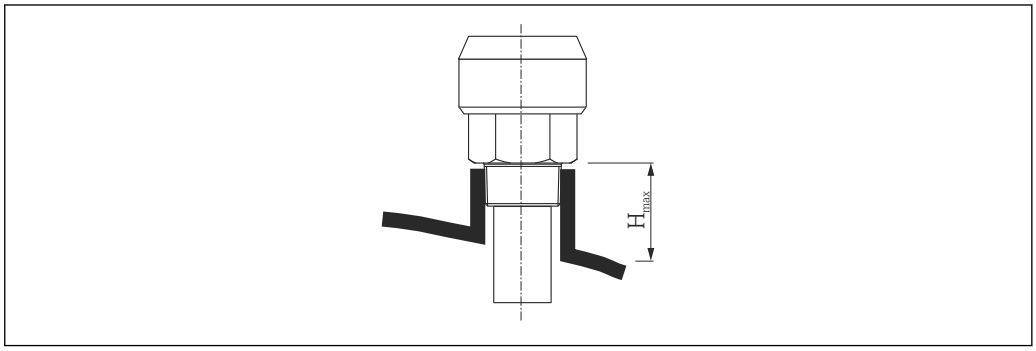

A0016806

13 *Nozzle height for horn antenna, encapsulated (FMR50); H_{max} = 60 mm (2.36 in)*

Conditions for longer nozzles

If the medium has good reflective properties, higher nozzles can be accepted. In this case the maximum nozzle height, H_{max}, is dependent on the nozzle diameter, D:

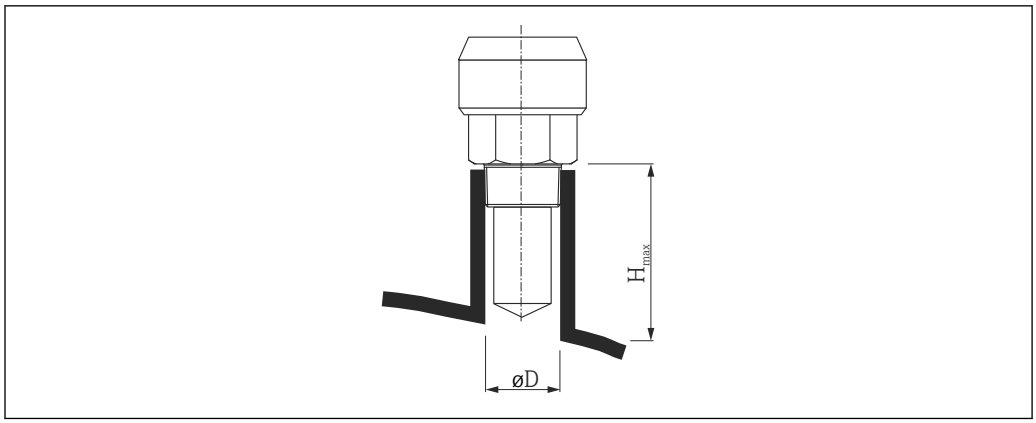

A0023612

Nozzle diameter *D*	Maximum nozzle height H_{max}
40 mm (1.5 in)	200 mm (7.9 in)
50 mm (2 in)	250 mm (9.9 in)
80 mm (3 in)	300 mm (11.8 in)
100 mm (4 in)	400 mm (15.8 in)
150 mm (6 in)	500 mm (19.7 in)

If the antenna doesn't extend below the nozzle, observe the following:
- The nozzle end must be smooth and free of burrs. If possible its edge should be rounded.
- An interference echo suppression must be performed.
- Please contact Endress+Hauser for applications with higher nozzles than those indicated in the table.

Threaded connection

- Tighten with the hexagonal nut only.
- Tool : 50 mm hexagonal wrench
- Maximum permissible torque: 35 Nm (26 lbf ft)

Horn antenna with slip-on flange (FMR50)

Alignment

When using the Micropilot with a slip-on flange in explosion-hazardous areas, strictly observe all specifications in the relevant Safety Instructions (XA).

- Align the antenna vertically to the product surface.
  Optionally, a variable flange seal, which is available as an accessory, can be used for alignment (see Technical Information BA01048F, chapter "Accessories").
- A marking at the feedthrough enables alignment of the antenna. This marking must be aligned towards the tank wall as well as possible.

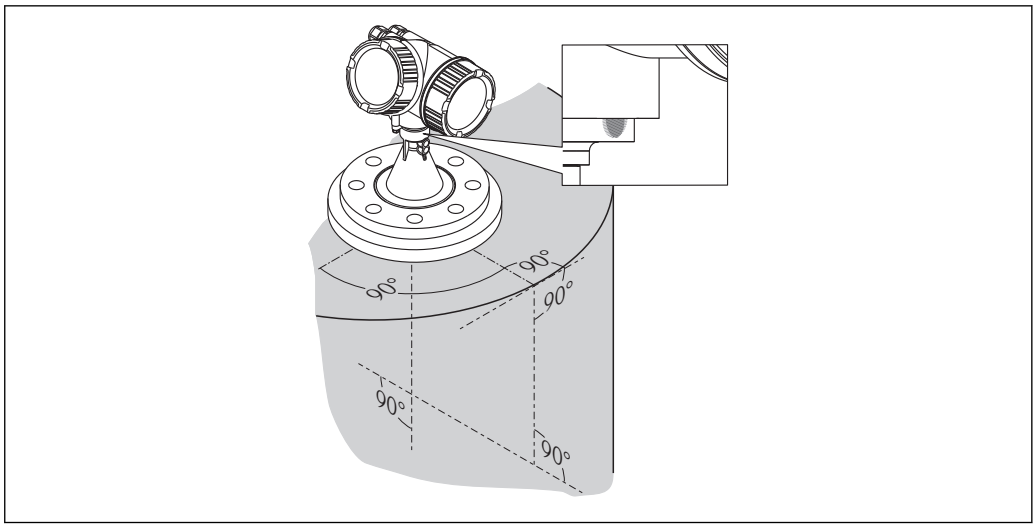

A0019439

Depending on the device version the marking may be a circle or two short parallel lines.

Nozzle mounting

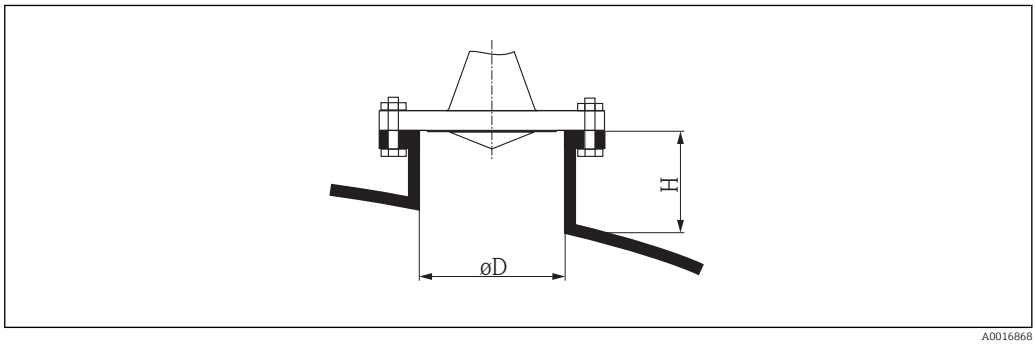

A0016868

14 *Nozzle height and diameter for horn antenna with slip-on flange*

Nozzle diameter *D*	**Maximum nozzle height** H_{max}
80 mm (3 in)	300 mm (11.8 in)
100 mm (4 in)	400 mm (15.8 in)
150 mm (6 in)	500 mm (19.7 in)

Horn antenna with mounting bracket (FMR50)

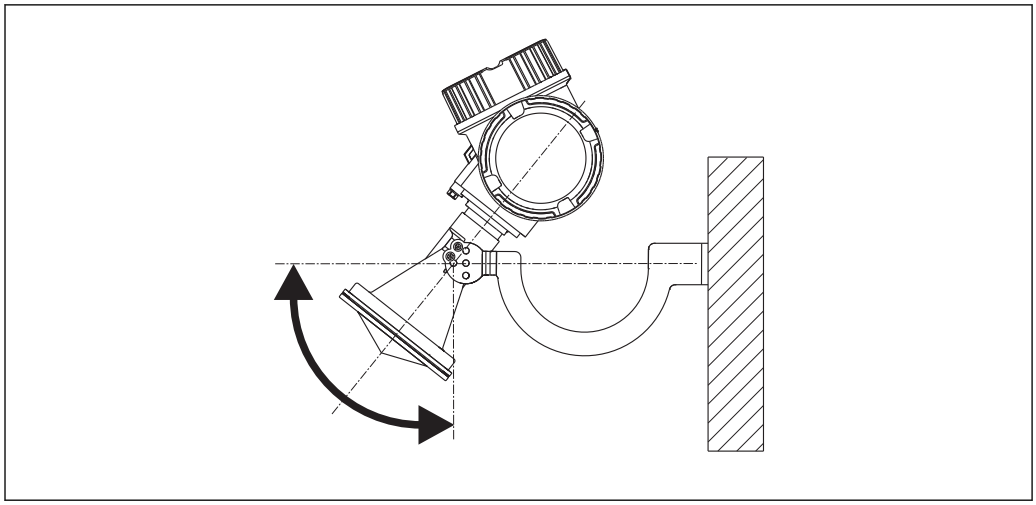

15 *Installation of the horn antenna with mounting bracket*

Align the antenna vertically to the product surface using the mounting bracket.

NOTICE

The mounting bracket has no conductive connection to the transmitter housing.
Danger of electrostatic charge
► Connect the mounting bracket to the local potential equalization system.

Mesurement from the outside through plastic walls (FMR50/FMR51)

- Dielectric constant of the medium: $\varepsilon_r > 10$
- If possible, use an antenna 100 mm (4 in).
- The distance from the lower edge of the antenna to the tank ceiling should be about 100 mm (4 in).
- If possible, avoid mounting locations where condensation or build-up might occur.
- In case of outdoor mounting, the space between antenna and vessel has to be protected from the elements.
- Do not mount any potential reflectors (e.g. pipes) outside the tank in the signal beam.

Suitable thickness of the tank ceiling:

Penetrated material	PE	PTFE	PP	Perspex
DK / ε_r	2.3	2.1	2.3	3.1
Optimum thickness [1)]	3.8 mm (0.15 in)	4.0 mm (0.16 in)	3.8 mm (0.15 in)	3.3 mm (0.13 in)

1) Other possible values for the thickness are multiples of the values listed (e.g. for PE: 7,6 mm (0.3 in), 11,4 mm (0.45 in)

Installation in stilling well

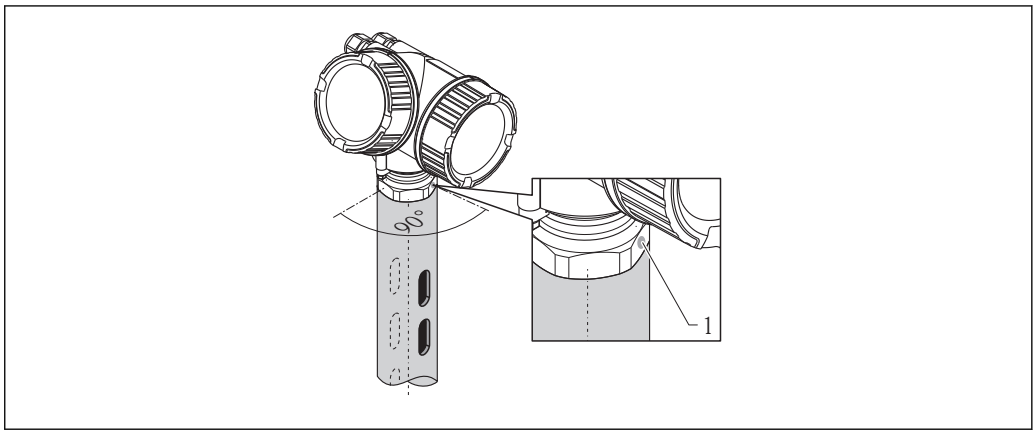

16 *Installation in stilling well*

1 Marking for antenna alignment

- For horn antenna: Align the marking towards the slots of the stilling well.
- Measurements can be performed through an open full bore ball valve without any problems.
- After mounting, the housing can be turned 350° in order to facilitate access to the display and the terminal compartment.

Recommendations for the stilling well

- Metal (no enamel coating; plastic on request).
- Constant diameter.
- Diameter of stilling well not larger than antenna diameter.
- Diameter difference between horn antenna and inner diameter of the stilling well as small as possible.
- Weld seam as smooth as possible and on the same axis as the slots.
- Slots offset 180° (not 90°).
- Slot width or diameter of holes max. 1/10 of pipe diameter, de-burred. Length and number do not have any influence on the measurement.
- Select horn antenna as big as possible. For intermedaite sizes (e.g. 180 mm (7 in)) select next larger antenna and adapt it mechanically (for horn antennas)
- At any transition (i.e. when using a ball valve or mending pipe segments), no gap may be left exceeding 1 mm (0.04 in).
- The stilling well must be smooth on the inside (average roughness $R_z \leq 6.3$ µm (248 µin)). Use extruded or parallel welded metal pipe. An extension of the pipe is possible with welded flanges or pipe sleeves. Flange and pipe have to be properly aligned at the inside.
- Do not weld through the pipe wall. The inside of the stilling well must remain smooth. In case of unintentional welding through the pipe, the weld seam and any unevenness on the inside need to be carefully removed and smoothened. Otherwise, strong interference echoes will be generated and material build-up will be promoted.
- In the case of smaller nominal widths flanges must be welded to the pipe such that they allow for a correct orientation (marker aligned toward slots).

Examples for the construction of stilling wells

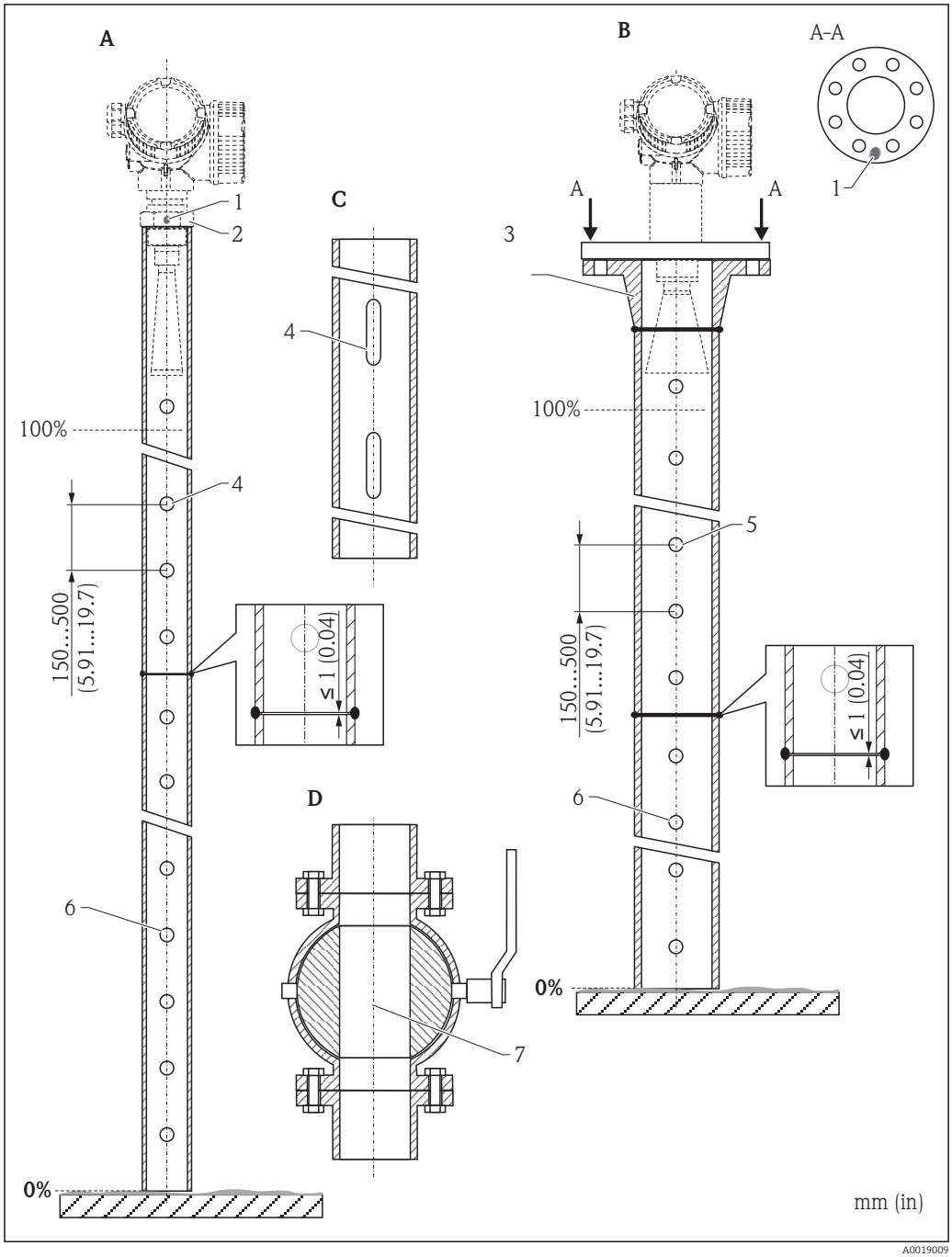

A Micropilot FMR50/FMR51: Horn 40mm(1½")
B Micropilot FMR50/FMR51/FMR52/FMR54: Horn 80mm(3")
C Stilling well with slots
D Full bore ball valve
1 Marking for axial alignment
2 Threaded connection
3 e.g. welding neck flange DIN2633
4 Φ hole max. 1/10 Φ stilling well
5 Φ hole max. 1/10 Φ stilling well; single sided or drilled through
6 Inside of holes deburred
7 Diameter of opening of ball valve must always be equivalent to pipe diameter; avoid edges and constrictions.

Installation in bypass

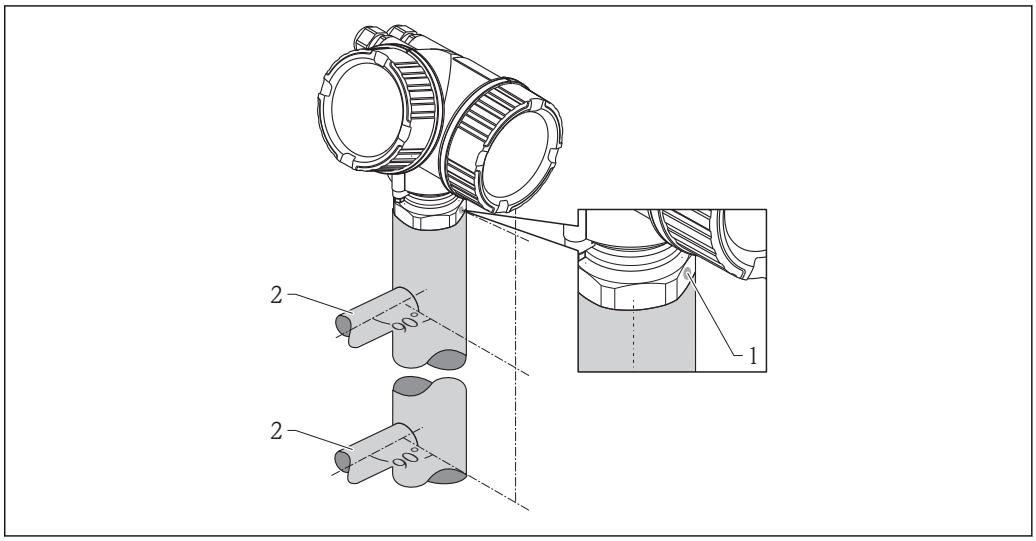

A0019446

17 *Installation in bypass*

1 Marking for antenna alignment
2 Tank connectors

- Alighn the marker perpendicular (90°) to the tank connectors.
- Measurements can be performed through an open full bore ball valve without any problems.
- After mounting, the housing can be turned 350° in order to simplify access to the display and the terminal compartment.

Recommendations for the bypass pipe

- Metal (no plastic or enamel coating).
- Constant diameter.
- Select horn antenna as big as possible. For intermediate sizes (e.g. 95 mm (3.5 in)) select next larger antenna and adapt it mechanically (for horn antennas).
- Diameter difference between horn antenna and inner diameter of the bypass as small as possible.
- At any transition (i.e. when using a ball valve or mending pipe segments), no gap may be created exceeding 1 mm (0.04 in).
- In the area of the tank connections (~ ±20 cm (7.87 in)) a reduced accuracy of the measurement has to be expected.

Example for the construction of a bypass

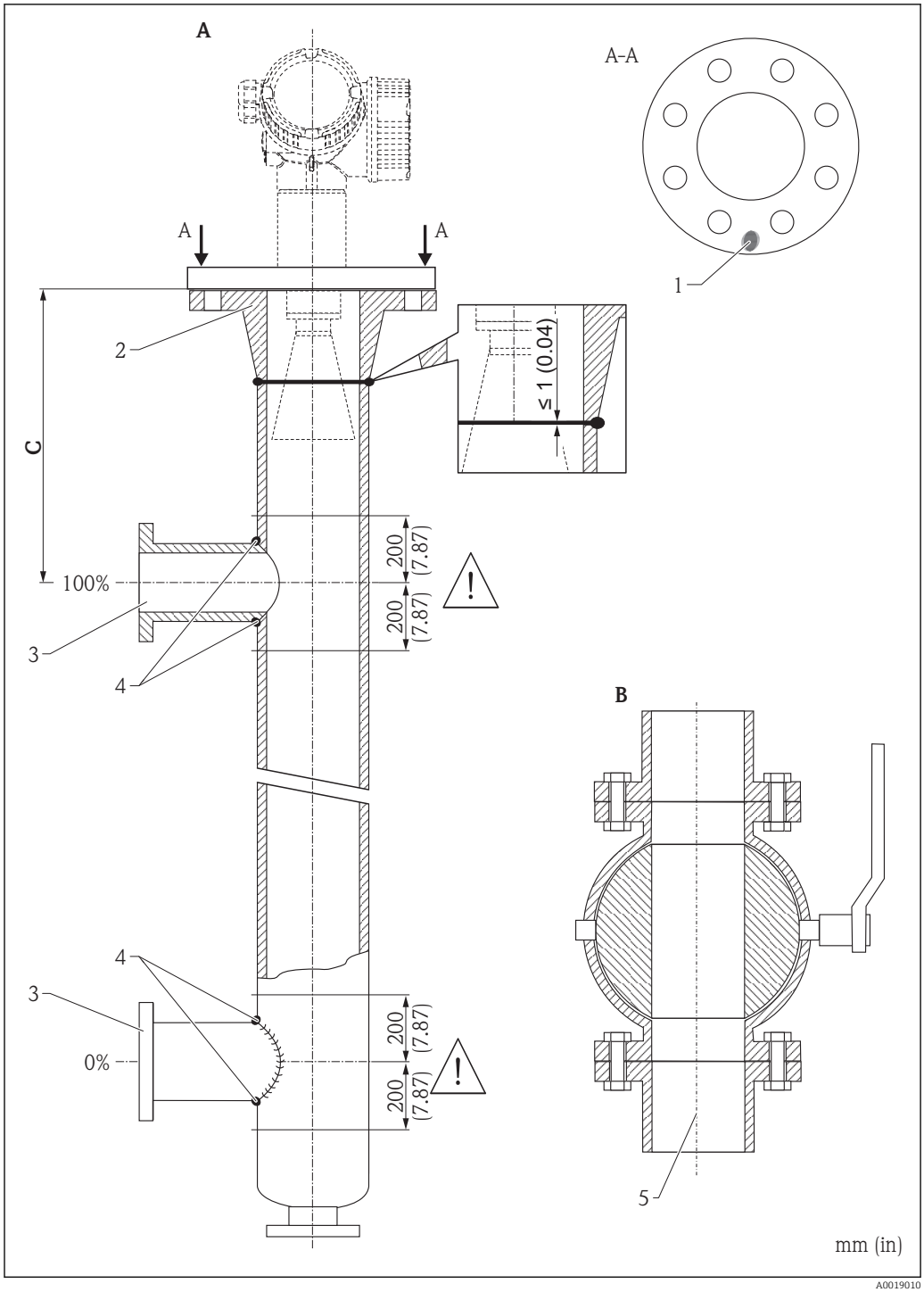

A Micropilot FMR50/FMR51/FMR52/FMR54: Horn 80mm(3")
B Full bore ball valve
C Minimum distance to upper connection pipe: 400 mm (15,7 in)
1 Marking for axial alignment
2 e.g. welding neck flange DIN2633
3 Diameter of the connection pipes as small as possible
4 Do not weld through the pipe wall; the inside of the bypass must remain smooth.
5 Diameter of opening of ball valve must always be equivalent to pipe diameter. Avoid edges and constrictions.

Vessels with heat insulation

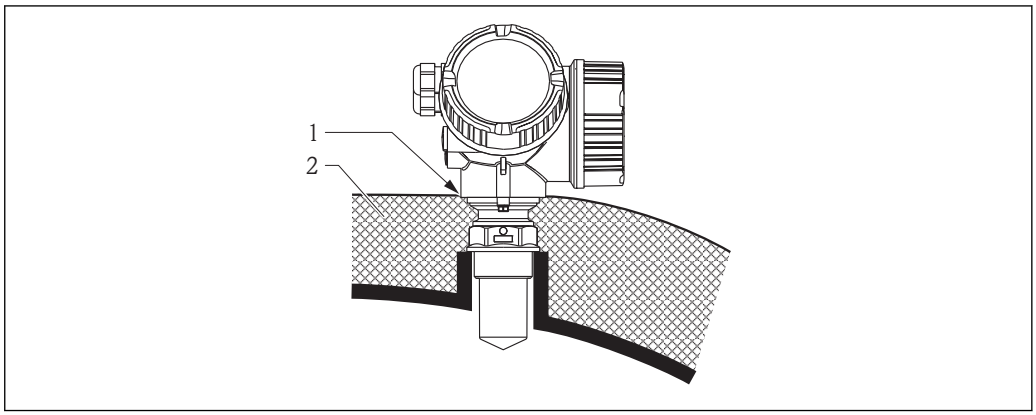

A0019141

If process temperatures are high, the device must be included in normal tank insulation to prevent the electronics heating up as a result of heat radiation or convection. The insulation may not exceed beyond the neck of the housing.

Environment

Ambient temperature range

Measuring device	−40 to +80 °C (−40 to +176 °F); −50 °C (−58 °F) with manufacturer declaration on request
Local display	−20 to +70 °C (−4 to +158 °F), the readability of the display may be impaired at temperatures outside the temperature range.

When operating the device in the open with strong sunlight:
- Mount the device in a shady position.
- Avoid direct sunlight, especially in warmer regions.
- Use a weather protection cover (see accessories).

Ambient temperature limits

The following diagrams take into account only functional aspects. There may be further restrictions for certified device versions. Please refere to the separate Safety Instructions → 83.

With a temperature (T_p) at the process connection the admissible ambient temperature (T_a) is reduced according to the following diagram (temperature derating):

Information concerning the derating tables

Option	Meaning
A	2-wire; 4-20 mA HART
B	2-wire; 4-20 mA HART, switch output
C	2-wire; 4-20 mA HART, 4-20 mA
E	2-wire; FF, switch output
G	2-wire; PA, switch output
K	4-wire 90-253VAC; 4-20 mA HART
L	4-wire 10, 4-48VDC; 4-20 mA HART

FMR50
Housing: GT19 (Plastics PBT)
Temperature unit: °C (°F)

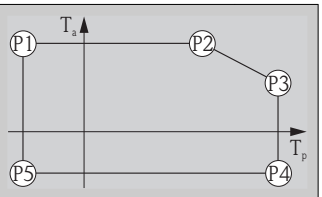

Power Supply; Output (Pos. 2 of the product structure)	P1		P2		P3		P4		P5		P6	
	T_p	T_a	T_p	T_a	T_p	T_a	T_p	T_a	T_p	T_a	T_p	T_a
A	-40 (-40)	80 (176)	80 (176)	80 (176)	80 (176)	80 (176)	80 (176)	-40 (-40)	-40 (-40)	-40 (-40)	-	-
B Switch output not used	-40 (-40)	76 (169)	76 (169)	76 (169)	80 (176)	75 (167)	80 (176)	-40 (-40)	-40 (-40)	-40 (-40)	-	-
B Switch output used	-40 (-40)	60 (140)	60 (140)	60 (140)	80 (176)	58 (136)	80 (176)	-40 (-40)	-40 (-40)	-40 (-40)	-	-
C Channel 2 not used	-40 (-40)	80 (176)	80 (176)	80 (176)	80 (176)	80 (176)	80 (176)	-40 (-40)	-40 (-40)	-40 (-40)	-	-
C Channel 2 used	-40 (-40)	74 (165)	74 (165)	74 (165)	80 (176)	73 (163)	80 (176)	-40 (-40)	-40 (-40)	-40 (-40)	-	-
E, G Switch output not used	-40 (-40)	79 (174)	79 (174)	79 (174)	80 (176)	79 (174)	80 (176)	-40 (-40)	-40 (-40)	-40 (-40)	-	-
E, G Switch output used	-40 (-40)	63 (145)	63 (145)	63 (145)	80 (176)	60 (140)	80 (176)	-40 (-40)	-40 (-40)	-40 (-40)	-	-

FMR50
Housing: GT20 (Alu, coated)
Temperature unit: °C (°F)

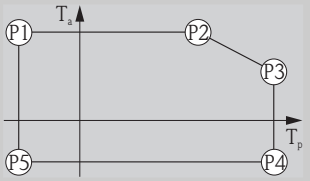

A0019351

Power Supply; Output (Pos. 2 of the product structure)	P1		P2		P3		P4		P5		P6	
	T_p	T_a	T_p	T_a	T_p	T_a	T_p	T_a	T_p	T_a	T_p	T_a
A	-40 (-40)	80 (176)	80 (176)	80 (176)	80 (176)	80 (176)	80 (176)	-40 (-40)	-40 (-40)	-40 (-40)	-	-
B Switch output not used	-40 (-40)	80 (176)	80 (176)	80 (176)	80 (176)	80 (176)	80 (176)	-40 (-40)	-40 (-40)	-40 (-40)	-	-
B Switch output used	-40 (-40)	77 (171)	77 (171)	77 (171)	80 (176)	76 (169)	80 (176)	-40 (-40)	-40 (-40)	-40 (-40)	-	-
C Channel 2 not used	-40 (-40)	80 (176)	80 (176)	80 (176)	80 (176)	80 (176)	80 (176)	-40 (-40)	-40 (-40)	-40 (-40)	-	-
C Channel 2 used	-40 (-40)	79 (174)	79 (174)	79 (174)	80 (176)	79 (174)	80 (176)	-40 (-40)	-40 (-40)	-40 (-40)	-	-
E, G Switch output not used	-40 (-40)	80 (176)	80 (176)	80 (176)	80 (176)	80 (176)	80 (176)	-40 (-40)	-40 (-40)	-40 (-40)	-	-
E, G Switch output used	-40 (-40)	78 (172)	78 (172)	78 (172)	80 (176)	78 (172)	80 (176)	-40 (-40)	-40 (-40)	-40 (-40)	-	-
K, L	-40 (-40)	77 (171)	77 (171)	77 (171)	80 (176)	77 (171)	80 (176)	-40 (-40)	-40 (-40)	-40 (-40)	-	-

Storage temperature

−40 to +80 °C (−40 to +176 °F)

−50 °C (−58 °F) with manufacturer declaration on request

Climate class

DIN EN 60068-2-38 (test Z/AD)

Altitude according to IEC61010-1 Ed.3

Up to 2 000 m (6 600 ft) above MSL.

Degree of protection

- With closed housing tested according to:
  - IP68, NEMA6P (24 h at 1.83 m under water surface) [6)]
  - For plastic housing with transparent cover (display module): IP68 (24 h at 1.00 m under water surface) [7)]
  - IP66, NEMA4X
- With open housing: IP20, NEMA1
- Display module: IP22, NEMA2

Degree of protection IP68 NEMA6P applies for M12 PROFIBUS PA plugs only when the PROFIBUS cable is plugged in and is also rated IP68 NEMA6P.

Vibration resistance

DIN EN 60068-2-64 / IEC 60068-2-64: 20 to 2 000 Hz, 1 $(m/s^2)^2/Hz$

Cleaning the antenna

The antenna can get contaminated, depending on the application. The emission and reception of microwaves can thus eventually be hindered. The degree of contamination leading to an error depends on the medium and the reflectivity, mainly determined by the dielectric constant ε_r.

If the medium tends to cause contamination and deposits, cleaning on a regular basis is recommended. Care has to be taken not to damage the antenna in the process of a mechanical or hose-down cleaning. The material compatibility has to be considered if cleaning agents are used! The maximum permitted temperature at the flange should not be exceeded.

6) also valid for the "Sensor remote" version
7) This restriction is valid if the following options of the product structure have been selected at the same time: 030("Display, Operation") = C("SD02") or E("SD03"); 040("Housing") = A("GT19").

Electromagnetic compatibility (EMC)

Electromagnetic compatibility to all relevant requirements of the EN 61326- series and NAMUR recommendation EMC (NE21). For details see declaration of conformity. [8)].

If only the analogue signal is used, unshielded interconnection lines are sufficient for the installation. In case of using the digital signal (HART/ PA/ FF) use shielded interconnection lines.

Max. fluctuations during EMC- tests: < 0.5 % of the span. As an exception to this, the maximum fluctuations may amount to 2 % of the span for devices with plastic housing and see-through lid (integrated display SD02 or SD03) if strong electromagnetic interferences in the frequenency range of 1 to 2 GHz are present.

8) Can be downloaded from www.endress.com.

Process

Process temperature, Process pressure

FMR50

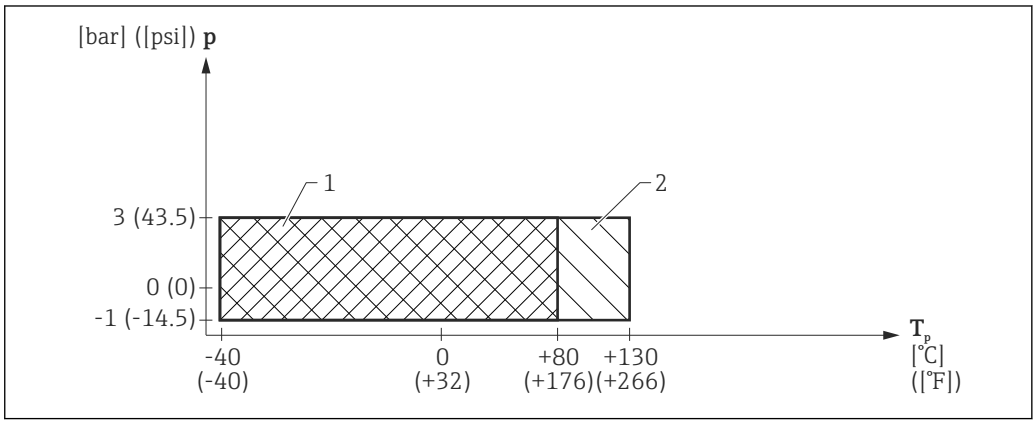

18 *FMR50: Admissible range of process temperature and process pressure*

1 Process connection: Flange
2 Process connection: Thread

Feature 100 "Process Connection"	Admissible process temperature	Admissible process pressure
▪ GGF: Thread ISO228 G1-1/2 ▪ RGF: Thread ANSI MNPT1-1/2	−40 to +130 °C (−40 to +266 °F)	p_{rel} = −1 to 3 bar (−14.5 to 43.5 psi) p_{abs} < 4 bar (58 psi) [1].
▪ XWG: UNI slip-on flange 3"/DN80/80 ▪ XZG: UNI slip-on flange 4"/DN100/100 X0G: UNI slip-on flange 6"/DN150/150	−40 to +80 °C (−40 to +176 °F)	

1) For devices with CRN approval the pressure range may be reduced → 69

Dielectric constant

- **For liquids**
  - $\varepsilon_r \geq 1.9$ in free-field applications
  - $\varepsilon_r \geq 1.4$ in stilling well
- **For bulk solids**
  $\varepsilon_r \geq 1.6$

For dielectric constants (DC values) of many media commonly used in various industries refer to:
- the Endress+Hauser DC manual (CP01076F)
- the Endress+Hauser "DC Values App" (available for Android and iOS)

Mechanical construction

Dimensions

Dimensions of the electronics housing

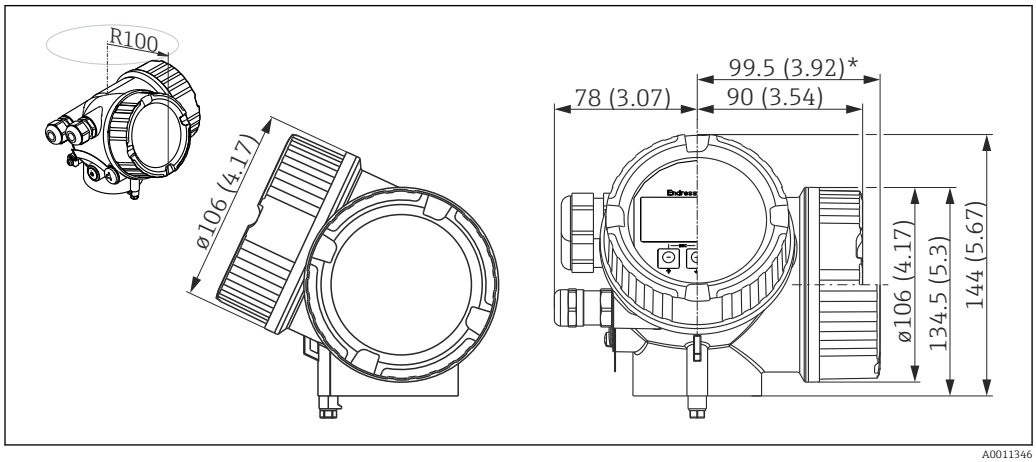

19 Housing GT19 (Plastics PBT); Dimensions in mm (in)

**for devices with integrated overvoltage protection.*

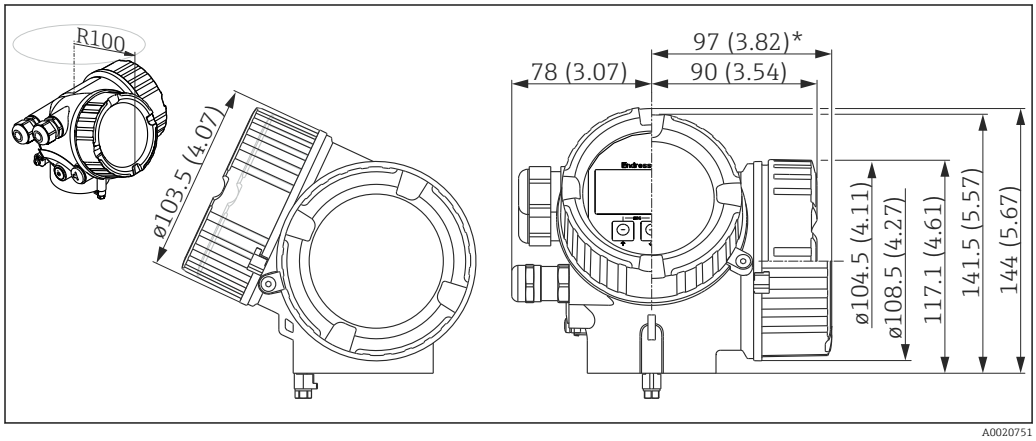

20 Housing GT20 (Alu coated); Dimensions in mm (in)

**for devices with integrated overvoltage protection.*

FMR50 with thread

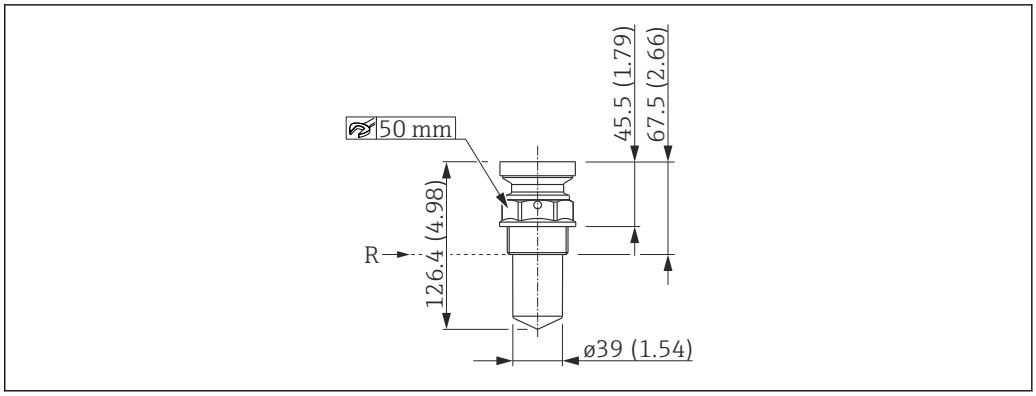

21 FMR50 with thread; dimensions: mm (in)

R Reference point of the measurement

Valid for the following device versions

- **Feature 100 "Process connection"**
  - GGF: Thread ISO228 G1-1/2, PVDF
  - RGF: Thread ANSI MNPT1-1/2, PVDF
- **Feature 070 "Antenna"**
  BM: Horn 40mm/1-1/2", PVDF encapsulated

FMR50 with mounting bracket or customer side connection

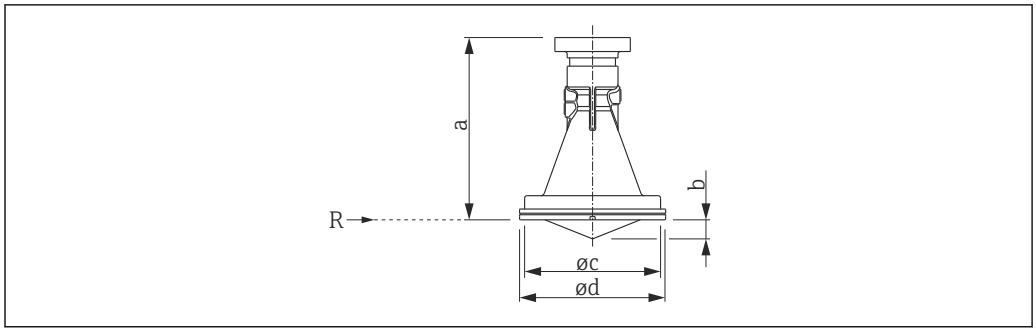

22 *FMR50 without process connection; dimensions: mm (in)*

R Reference point of the measurement

	Feature 100 "Process connection" ▪ **UAE Mounting bracket** ▪ **XRO: Customer side connection**	
	Feature 070 "Antenna" **BN: Horn 80mm/3"**	**Feature 070 "Antenna"** **BR: Horn 100mm/4"**
a	137.9 mm (5.43 in)	150.5 mm (5.93 in)
b	15 mm (0.59 in)	20 mm (0.79 in)
Φc	107 mm (4.21 in)	127 mm (5 in)
Φd	115 mm (4.53 in)	135 mm (5.31 in)

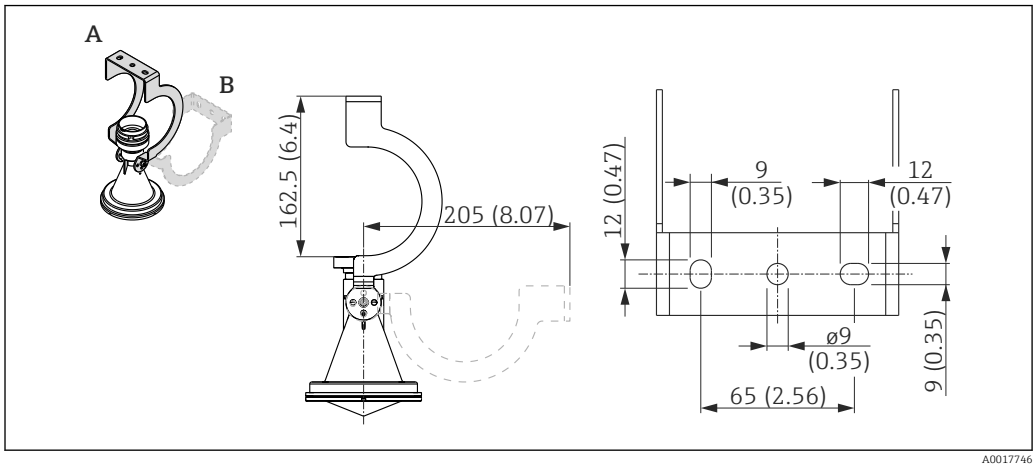

23 *Mounting bracket for FMR50/FMR56; dimensions: mm (in)*

A Mounting bracket aligned for roof mounting
B Mounting bracket aligned for wall mounting

FMR50 with slip-on flange 3"/DN80

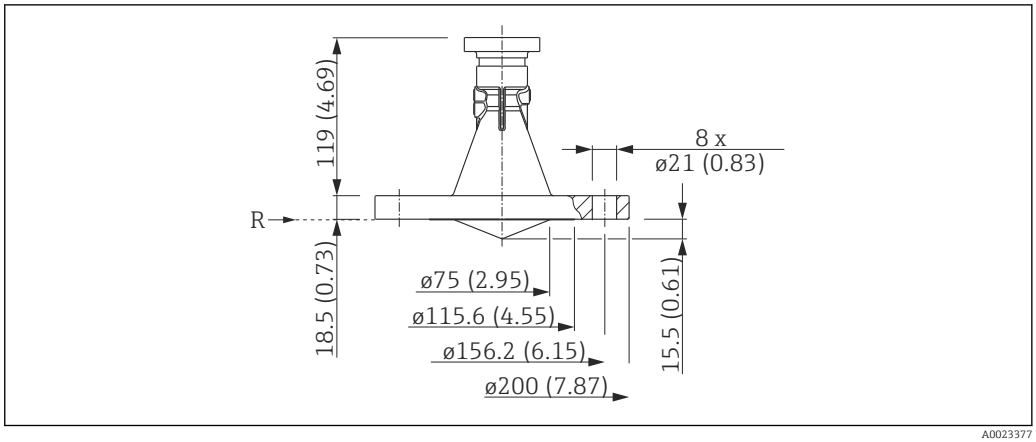

24 FMR50 with slip-on flange 3"/DN80; dimensions: mm (in)

R Reference point of the measurement

Valid for the following device versions

- **Feature 100 "Process connection"**
  XWG: UNI slip-on flange 3"/DN80, PP
- **Feature 070 "Antenna"**
  BN: Horn 80mm/3", PP cladded

The UNI slip-on flange is suitable for:
- ASME: NPS 3" Cl.150
- EN: DN80 PN16
- JIS: 10K 80

FMR50 with slip-on flange 4"/DN100

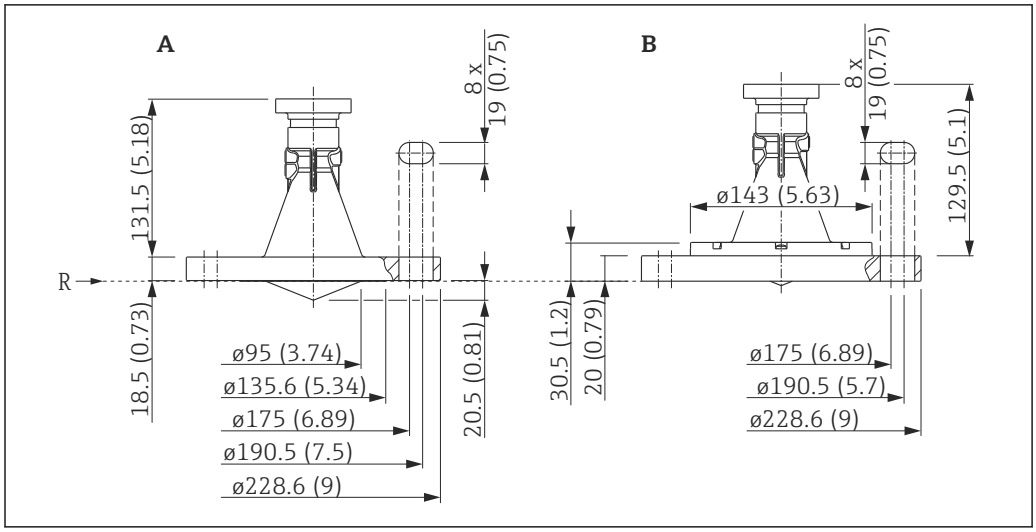

25 FMR50 mit slip-on flange 4"/DN100; dimensions: mm (in)

A Horn antenna 100mm/4" (without adapter ring)
B Horn antenna 80mm/3" (with adapter ring)
R Reference point of the measurement

Valid for the following device versions

- **Feature 100 "Process connection":**
  XZG: UNI slip-on flange 4"/DN100
- **Feature 070 "Antenna":**
  - BR: Horn 100mm/4", PP cladded (diagram A)
  - BN: Horn 80mm/3", PP cladded (diagram B)

The UNI slip-on flange is suitable for:
- ASME: NPS 4" Cl.150
- EN: DN100 PN16
- JIS: 10K 100

FMR50 with slip-on flange 6"/DN150

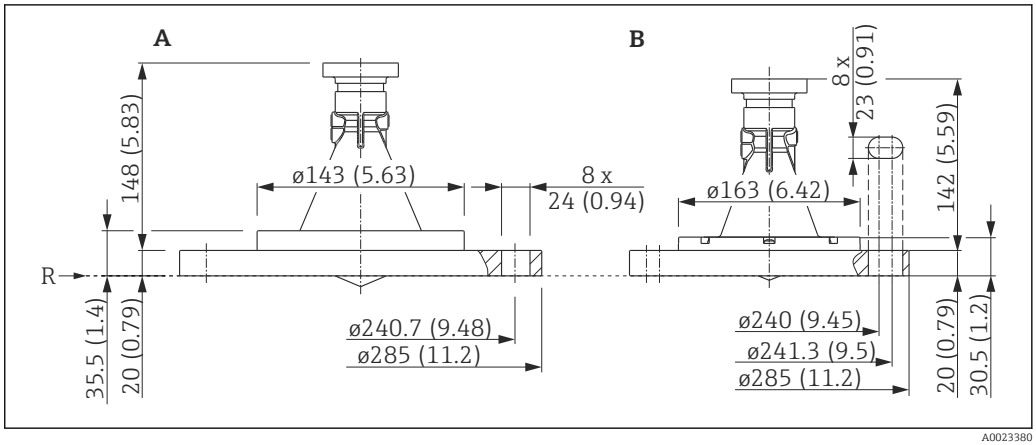

26 FMR50 with slip-on flange 6"/DN150; dimensions: mm (in)

A Horn antenna 100mm/4"
B Horn antenna 80mm/3"
R Reference point of the measurement

Valid for the following device versions

- **Feature 100 "Process connection":**
  X0G: UNI slip-on flange 6"/DN150, PP
- **Feature 070 "Antenna":**
  - BR: Horn 100mm/4", PP cladded (Diagramm A)
  - BN: Horn 80mm/3", PP cladded (Diagramm B)

The UNI slip-on flange is suitable for:
- ASME: NPS 6" Cl.150
- EN: DN150 PN16
- JIS: 10K 150

Weight

Housing

Part	Weight
Housing GT19 - plastic	approx. 1.2 kg (2.7 lb)
Housing GT20 - aluminium	approx. 1.9 kg (4.2 lb)

Antenna and process connection

Device	Weight of antenna and process connection
FMR50	max. 1.5 kg (3.3 lb) + weight of flange [1]

1) For the weight of the flange refer to Technical Information TI00426F.

Materials: GT19 housing

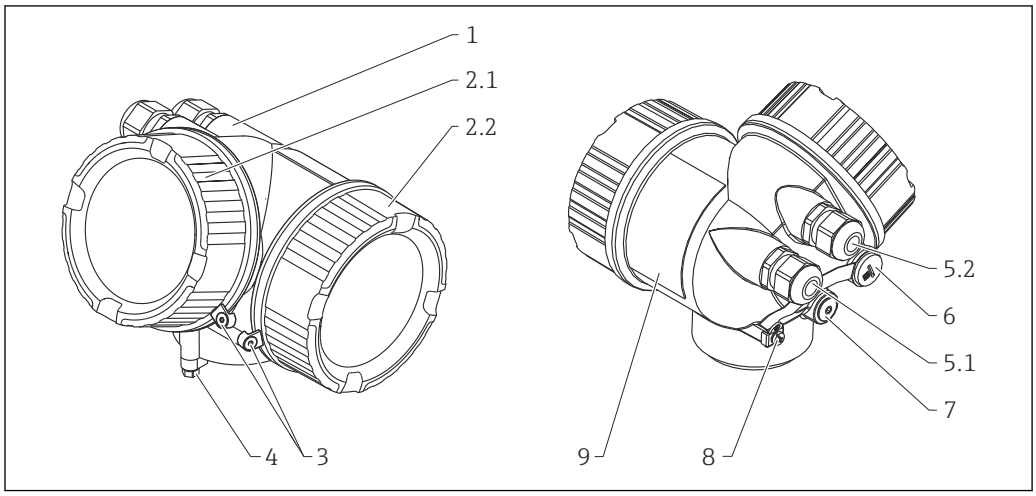

A0013788

No.	Part	Material
1	Housing	PBT
2.1	Cover of the electronics compartment	▪ Cover, depending on the device version: – PA (see-through cover) – PBT (non-transparent cover) ▪ Cover seal: EPDM ▪ Thread-coating: Graphite-based lubricant varnish
2.2	Cover of the terminal compartment	▪ Cover: PBT ▪ Cover seal: EPDM ▪ Thread-coating: Graphite-based lubricant varnish
4	Lock at the housing neck	▪ Screw: A4-70 ▪ Clamp: 316L (1.4404)
5.1	Dummy plug, cable gland, adapter or plug (depending on the device version)	▪ Dummy plug, depending on the device version: – PE – PBT-GF ▪ Cable gland, depending on the device version: – Nickel-plated brass (CuZn) – PA ▪ Adapter: 316L (1.4404/1.4435) ▪ Seal: EPDM ▪ M12 plug: Nickel-plated brass [1)] ▪ 7/8" plug: 316 (1.4401) [2)]
5.2	Dummy plug, cable gland or adapter (depending on the device version)	▪ Dummy plug, depending on the device version: – PE – PBT-GF – Nickel-plated steel ▪ Cable gland, depending on the device version: – Nickel-plated brass (CuZn) – PA ▪ Adapter: 316L (1.4404/1.4435) ▪ Seal: EPDM
6	Dummy plug or M12 socket (depending on the device version)	▪ Dummy plug: Nickel-plated brass (CuZn) ▪ M12 socket: Nickel-plated GD-Zn
7	Pressure relief stopper	Nickel-plated brass (CuZn)
8	Ground terminal	▪ Screw: A2 ▪ Spring washer: A4 ▪ Clamp: 304 (1.4301) ▪ Holder: 304 (1.4301)
9	Nameplate	Sticker

1) For the version with M12 plug the sealing material is Viton.
2) For the version with 7/8" plug, the sealing material is NBR.

Materials: GT20 housing

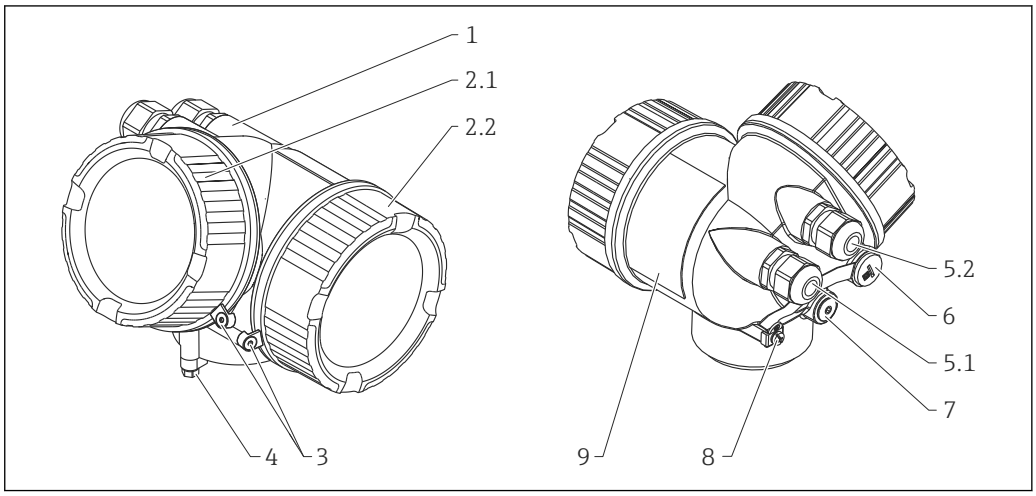

A0013788

Nr.	Part	Material
1	Housing, RAL 5012 (blue)	▪ Housing: AlSi10Mg(<0,1% Cu) ▪ Coating: Polyester
2.1	Cover of the electronics compartment; RAL 7035 (gray)	▪ Cover: AlSi10Mg(<0,1% Cu) ▪ Window: Glass ▪ Cover seal: EPDM ▪ Seal of the window: NBR ▪ Thread-coating: Graphite-based lubricant varnish
2.2	Cover of the terminal compartment; RAL 7035 (gray)	▪ Cover: AlSi10Mg(<0,1% Cu) ▪ Cover seal: EPDM ▪ Thread-coating: Graphite-based lubricant varnish
3	Cover lock	▪ Screw: A4 ▪ Clamp: 316L (1.4404)
4	Lock at the housing neck	▪ Screw: A4-70 ▪ Clamp: 316L (1.4404)
5.1	Dummy plug, cable gland, adapter or plug (depending on the device version)	▪ Dummy plug, depending on the device version: – PE – PBT-GF ▪ Cable gland, depending on the device version: – Nickel-plated brass (CuZn) – PA ▪ Adapter: 316L (1.4404/1.4435) ▪ Seal: EPDM ▪ M12 plug: Nickel-plated brass [1)] ▪ 7/8" plug: 316 (1.4401) [2)]
5.2	Dummy plug, cable gland or adapter (depending on the device version)	▪ Dummy plug, depending on the device version: – PE – PBT-GF – Nickel-plated steel ▪ Cable gland, depending on the device version: – Nickel-plated brass (CuZn) – PA ▪ Adapter: 316L (1.4404/1.4435) ▪ Seal: EPDM
6	Dummy plug or M12 socket (depending on the device version)	▪ Dummy plug : Nickel-plated brass (CuZn) ▪ M12 socket: Nickel-plated GD-Zn
7	Pressure relief stopper	Nickel-plated brass (CuZn)

Nr.	Part	Material
8	Ground terminal	▪ Screw: A2 ▪ Spring washer: A2 ▪ Clamp: 304 (1.4301) ▪ Holder: 304 (1.4301)
9	Nameplate	Sticker

1) For the version with M12 plug the sealing material is Viton.
2) For the version with 7/8" plug, the sealing material is NBR.

Materials: Antenna and process connection

FMR50

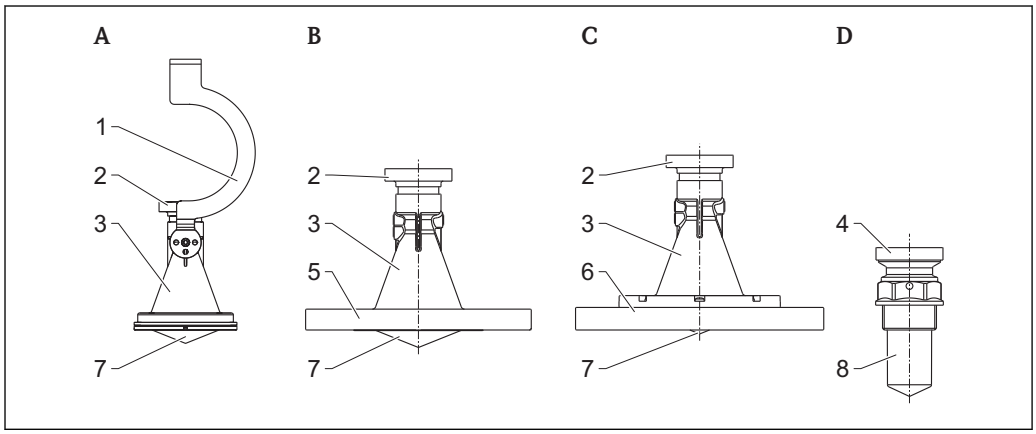

A0018949

A Standard version with mounting bracket
B Horn antenna with slip-on flange
C Horn antenna with flange and adapter ring
D Threaded version

Pos.	Part	Material
1	Mounting bracket	304 (1.4301)
	Screw	A2
	Nordlock washer	A4
2	Housing adapter	304 (1.4301)
3	Horn	PBT
4	Housing adapter	PBT
5	Slip-on flange	PP
6	Flange + adapter ring	PP
	Screw	A2
	Seal	FKM
7	Focusing lense	PP
	Seal	VMQ
8	Schrew-in adapter	PVDF

Materials: Weather protection cover

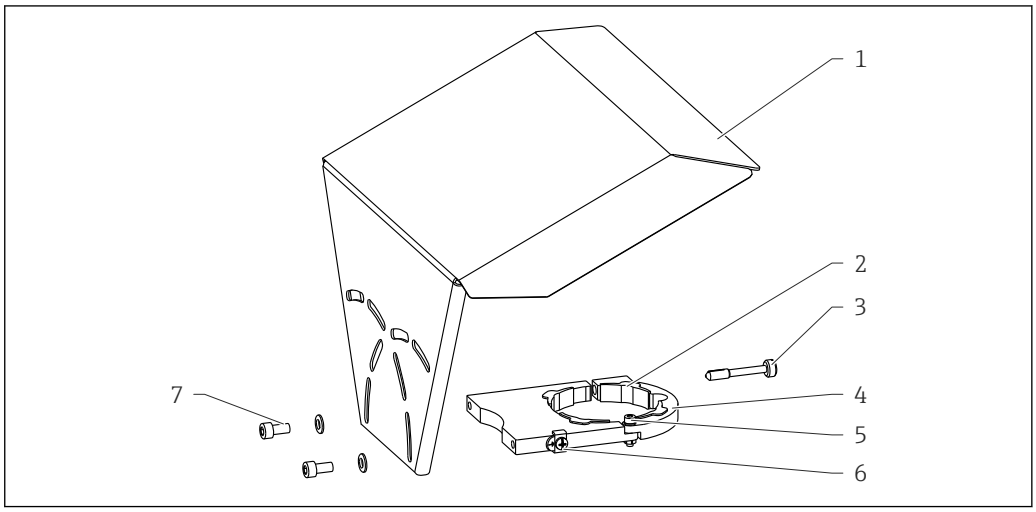

A0015473

No	Part: Material
1	Protection cover: 316L (1.4404)
2	Molded rubber part (4x): EPDM
3	Clamping screw: 316L (1.4404) + carbon fibre
4	Bracket: 316L (1.4404)
5	▪ Cheese head screw: A4-70 ▪ Nut: A4 ▪ Spring washer: A4
6	Ground terminal ▪ Screw: A4 ▪ Spring washer: A4 ▪ Clamp: 316L (1.4404) ▪ Holder: 316L (1.4404)
7	▪ Washer: A4 ▪ Cheese head screw: A4-70

Operability

Operating concept

Operator-oriented menu structure for user-specific tasks
- Commissioning
- Operation
- Diagnostics
- Expert level

Operatring languages
- English (contained in every device)
- One additional language as ordered (feature 500 of the product structure)

Quick and safe commissioning
- Guided menus ("Make-it-run" wizards) for applications
- Menu guidance with brief explanations of the individual parameter functions

Reliable operation
- Standardized operation at the device and in the operating tools
- Data storage device (HistoROM) for process and measuring device data with event logbook available at all times - even if electronics modules are replaced

Efficient diagnostics increase measurement reliability
- Remedy information is integrated in plain text
- Diverse simulation options and line recorder functions

Local operation

Order code for "Display; Operation", option **C** "SD02"	Order code for "Display; Operation", option **E** "SD03"
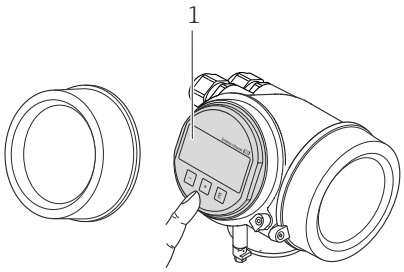	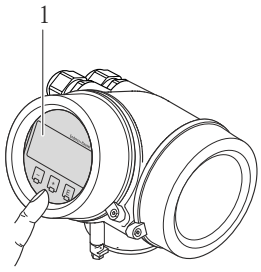
1 Operation with pushbuttons	*1 Operation with touch control*

Display elements
- 4-line display
- In the case of order code for "Display; Operation", option **E**: white background lighting; switches to red in event of device errors
- Format for displaying measured variables and status variables can be individually configured
- Permitted ambient temperature for the display: –20 to +70 °C (–4 to +158 °F)
  The readability of the display may be impaired at temperatures outside the temperature range.

Operating elements
- In the case of order code "Display; Operation", Option **C**: local operation with 3 push buttons (⊕, ⊖, Ⓔ)
- In the case of order code for "Display; Operation", option **E**: external operation via touch control; 3 optical keys: ⊕, ⊖, Ⓔ
- Operating elements also accessible in various hazardous areas

Additional functionality
- Data backup function
  The device configuration can be saved in the display module.
- Data comparison function
  The device configuration saved in the display module can be compared to the current device configuration.
- Data transfer function
  The transmitter configuration can be transmitted to another device using the display module.

Operation with remote display and operating module FHX50

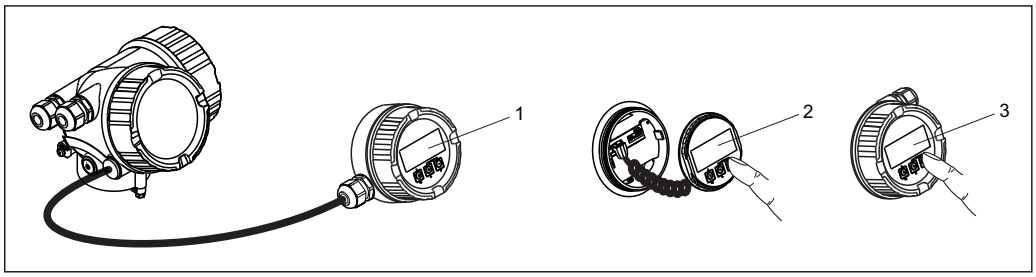

27 *FHX50 operating options*

1 *Housing of the remote display and operating module FHX50*
2 *Display and operating module SD02, push buttons; cover must be removed*
3 *Display and operating module SD03, optical keys; can be operated through the glass of the cover*

Remote operation

Via HART protocol

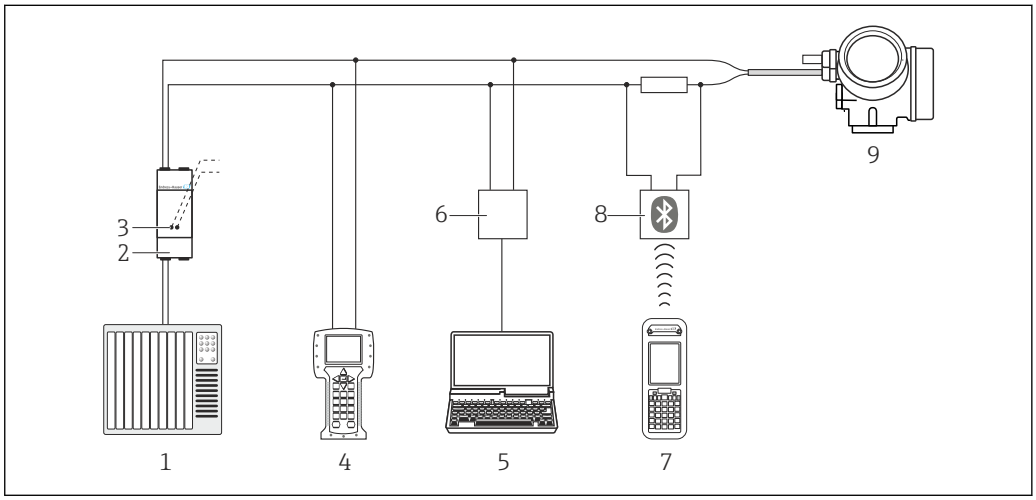

28 *Options for remote operation via HART protocol*

1 *PLC (programmable logic controller)*
2 *Transmitter power supply unit, e.g. RN221N (with communication resistor)*
3 *Connection for Commubox FXA191, FXA195 and Field Communicator 375, 475*
4 *Field Communicator 475*
5 *Computer with operating tool (e.g. FieldCare, AMS Device Manager, SIMATIC PDM)*
6 *Commubox FXA191 (RS232) or FXA195 (USB)*
7 *Field Xpert SFX350/SFX370*
8 *VIATOR Bluetooth modem with connecting cable*
9 *Transmitter*

Via PROFIBUS PA protocol

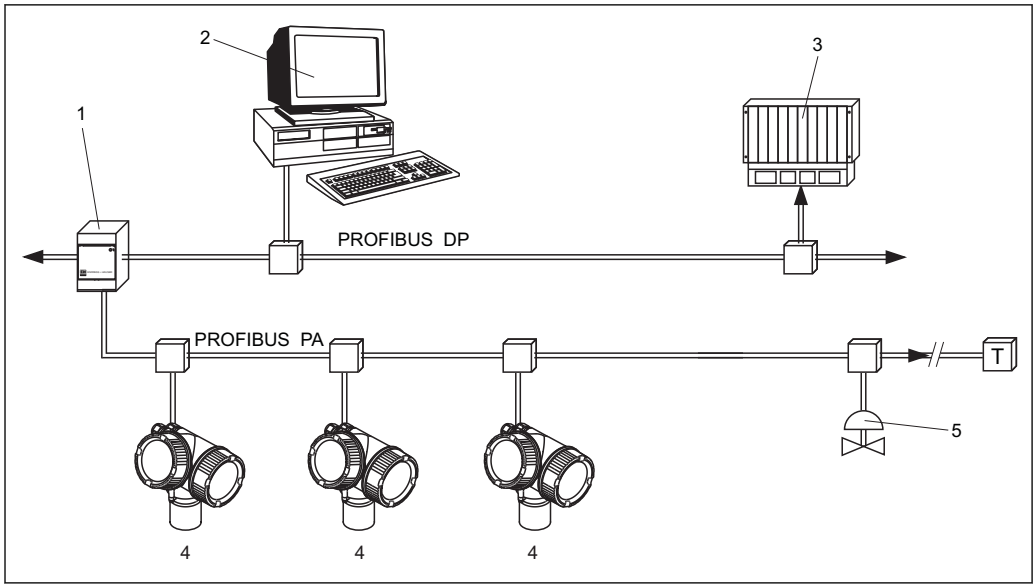

1 Segment coupler
2 Computer with Profiboard/Proficard and operating tool (e.g. FieldCare)
3 PLC (Progrommable Logic Controller)
4 Transmitter
5 Additional functions (valves etc.)

Via FOUNDATION Fieldbus

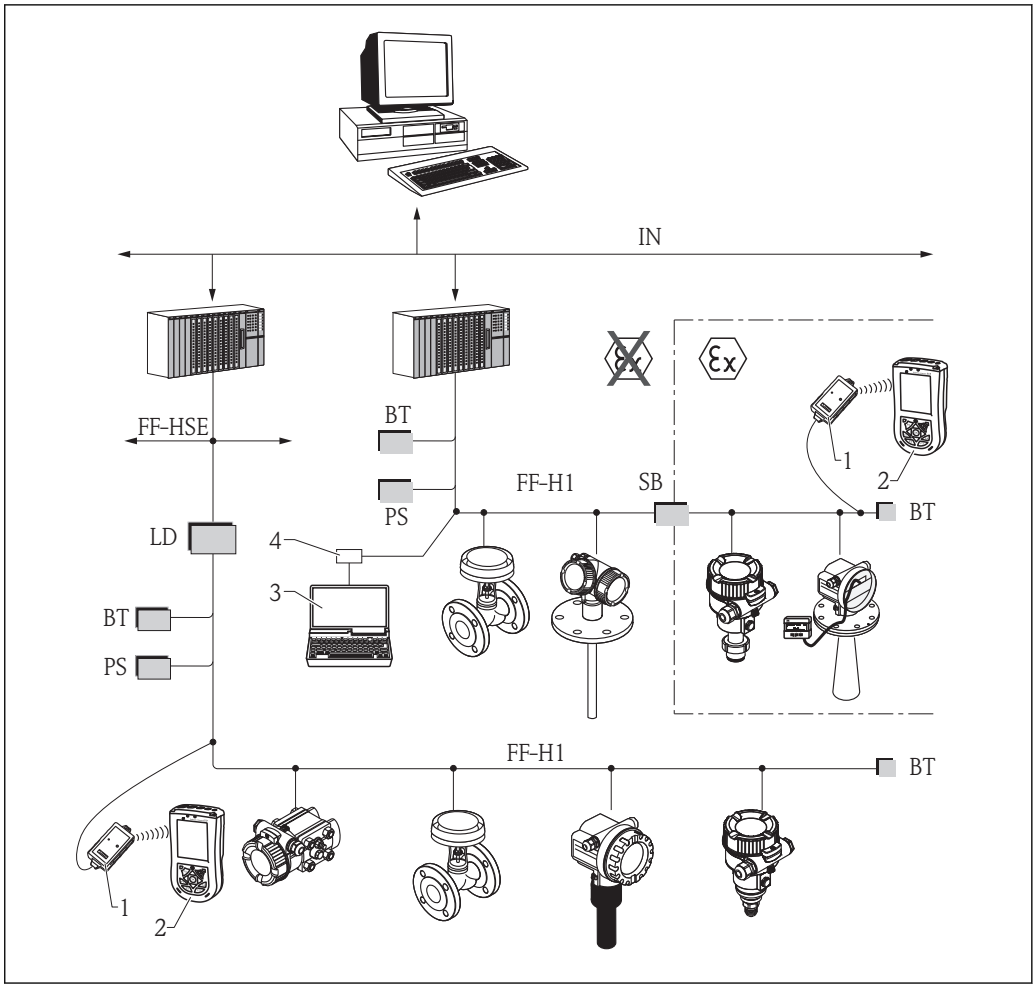

29 *FOUNDATION Fieldbus system architecture with associated components*

1 *FFblue Bluetooth modem*
2 *Field Xpert SFX350/SFX370*
3 *FieldCare*
4 *NI-FF interface card*

IN	Industrial network
FF-HSE	High Speed Ethernet
FF-H1	FOUNDATION Fieldbus-H1
LD	Linking Device FF-HSE/FF-H1
PS	Bus Power Supply
SB	Safety Barrier
BT	Bus Terminator

Via service interface (CDI)

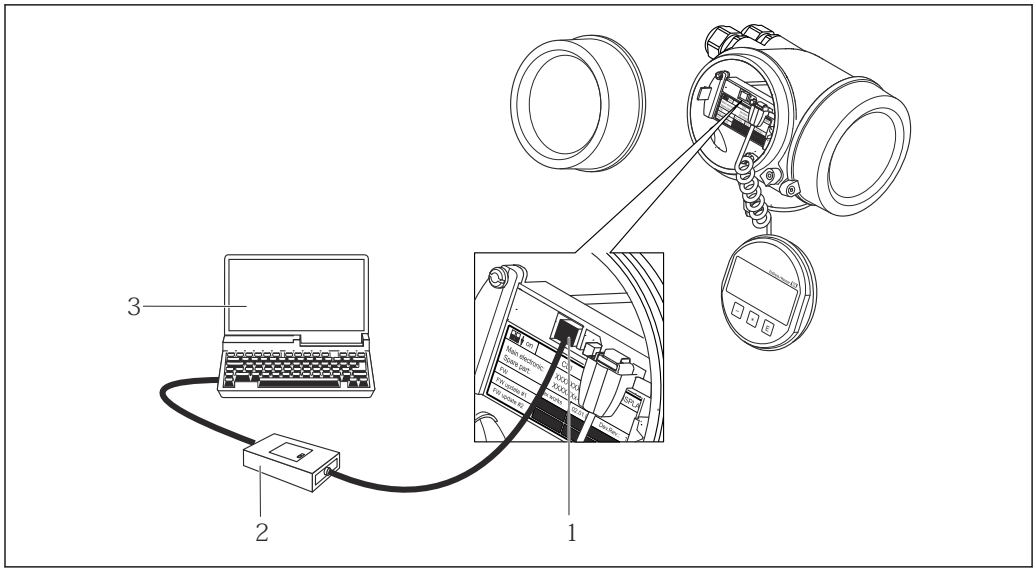

A0014019

1 Service interface (CDI) of the measuring device (= Endress+Hauser Common Data Interface)
2 Commubox FXA291
3 Computer with "FieldCare" operating tool

Integration in tank gauging system

The Endress+Hauser Tank Side Monitor NRF590 provides integrated communications for sites with multiple tanks, each with one or more sensors on the tank, such as radar, spot or average temperature, capacitive probe for water detection and/or pressure sensors. Multiple protocols out of the Tank Side Monitor guarantee connectivity to nearly any of the existing industry standard tank gauging protocols. Optional connectivity of analog 4...20 mA sensors, digital I/O and analog output simplify full tank sensor integration. Use of the proven concept of the intrinsically safe HART bus for all on-tank sensors yields extremely low wiring costs, while at the same time providing maximum safety, reliability and data availability.

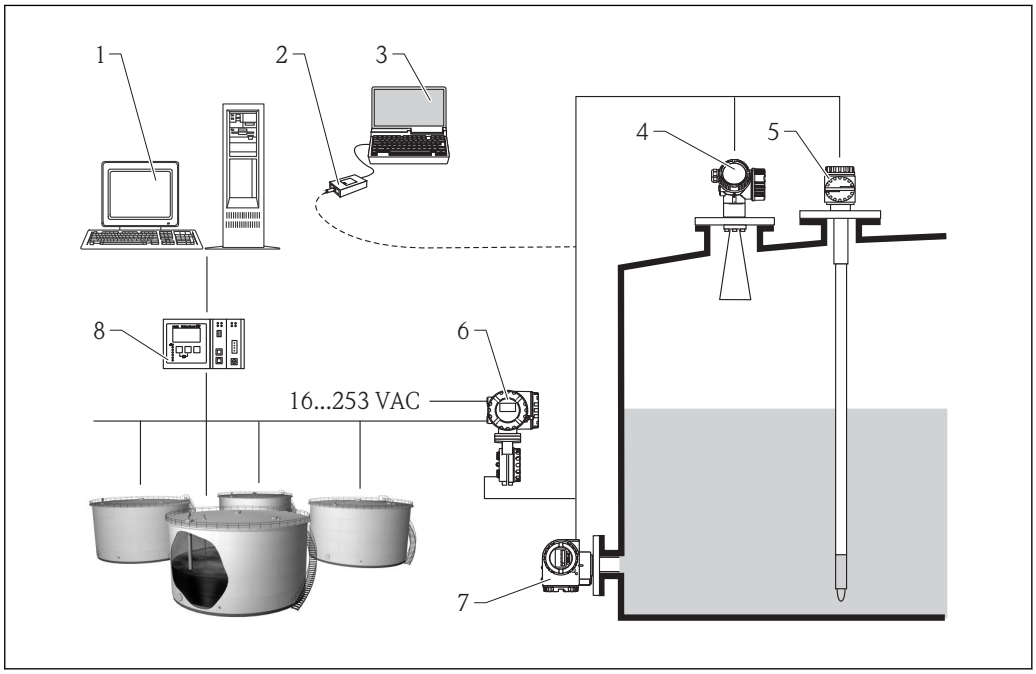

30 The complete measuring system consists of:

1 Tankvision workstation
2 Commubox FXA195 (USB) - optional
3 Computer with operating tool (ControlCare) - optional
4 Level measuring device
5 Temperature measuring device
6 Tank Side Monitor NRF590
7 Pressure measuring device
8 Tankvision Tank Scanner NXA820

System integration via Fieldgate

Vendor Managed Inventory

By using Fieldgates to interrogate tank or silo levels remotely, suppliers of raw materials can provide their regular customers with information about the current supplies at any time and, for example, account for them in their own production planning. For their part, the Fieldgates monitor the configured level limits and, if required, automatically activate the next supply. The spectrum of options here ranges from a simple purchasing requisition via e-mail through to fully automatic order administration by coupling XML data into the planning systems on both sides.

Remote maintenance of measuring equipment

Fieldgates not only transfer the current measured values, they also alert the responsible standby personnel, if required, via e-mail or SMS. In the event of an alarm or also when performing routine checks, service technicians can diagnose and configure connected HART devices remotely. All that is required for this is the corresponding HART operating tool (e.g. FieldCare, ...) for the connected device. Fieldgate passes on the information transparently, so that all options for the respective operating software are available remotely. Some on-site service operations can be avoided by using remote diagnosis and remote configuration and all others can at least be better planned and prepared.

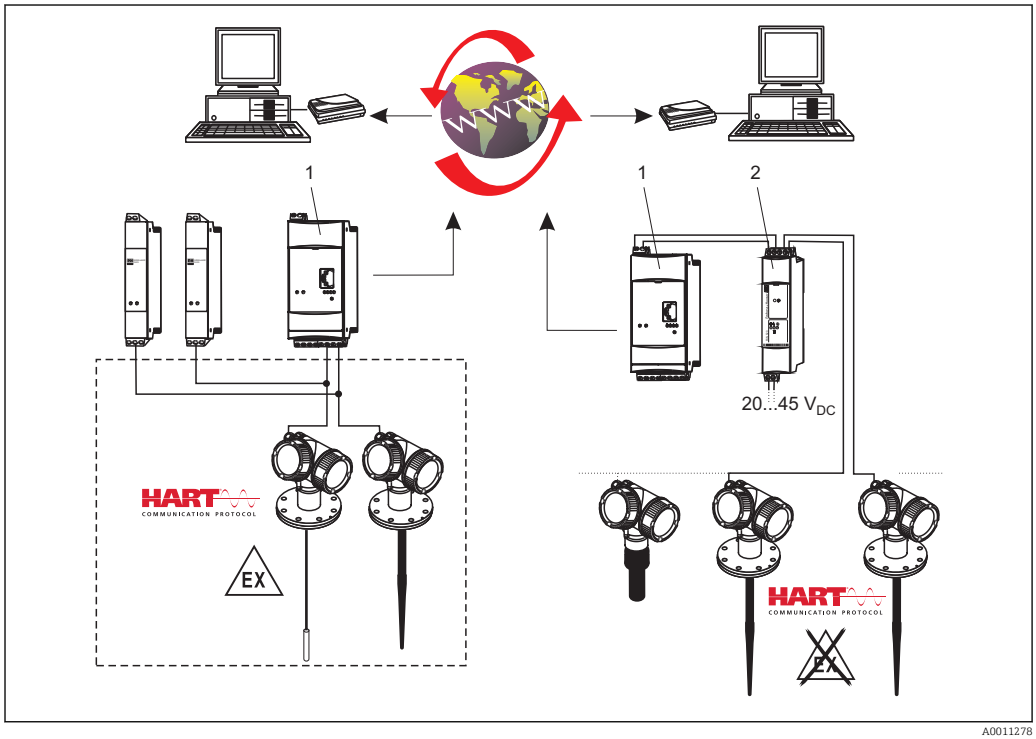

31 The complete measuring system consists of devices and:

1 Fieldgate FXA520
2 Multidrop Connector FXN520

The number of instruments which can be connected in mutidrop mode can be calculated by the "FieldNetCalc" program. A description of this program can be found in Technical Information TI 400F (Multidrop Conncector FXN520). The program is available form your Endress+Hauser sales organisation or in the internet at: www.de.endress.com/Download (text search = "Fieldnetcalc").

Certificates and approvals

CE mark

The measuring system meets the legal requirements of the applicable EC guidelines. These are listed in the corresponding EC Declaration of Conformity together with the standards applied.

Endress+Hauser confirms successful testing of the device by affixing to it the CE mark.

C-Tick symbol

The measuring system meets the EMC requirements of the "Australian Communications and Media Authority (ACMA)".

Ex approval

- ATEX
- IEC Ex
- CSA
- FM
- NEPSI
- KC
- INMETRO
- TIIS (in preparation)

Additional safety instructions must be observed for applications in hazardous areas. They are contained in the separate "Safety Instructions" (XA) document, which is included in the scope of delivery. Reference is made to the XA on the nameplate of the device.

Details on the available certificats as well as the associated XAs can be found in the **Associated documentation** chapter in the **Safety instructions** section: → 🖹 83.

Dual seal according to ANSI/ISA 12.27.01

The devices have been designed according to ANSI/ISA 12.27.01 as dual seal devices, allowing the user to waive the use and save the cost of installing external secondary process seals in the conduit as required by the process sealing sections of ANSI/NFPA 70 (NEC) and CSA 22.1 (CEC). These instruments comply with the North-American installation practice and provide a very safe and cost-saving installation for pressurized applications with hazardous fluids.

Further information can be found in the Safety Instructions (XA) of the relevant devices.

Functional Safety

Used for level monitoring (MIN, MAX, range) up to SIL 3 (homogeneous or inhomogeneous redundancy), independently assessed by TÜV Rhineland as per IEC 61508. Other information see documentation SD01087F: "Functional Safety Manual".

WHG

WHG approval: Z-65.16-524

Pressure Equipment Directive

The Micropilot is not subject to the scope of the Pressure Equipment Directive 97/23/EC, as it does not have a pressure-bearing housing according to article 1, section 2.1.4 of the directive.

Marine certificate (in preparation)

in preparation

Radio standard EN302729-1/2

The devices Micropilot FMR50, FMR51, FMR52, FMR56 and FMR57 are conform with the LPR (Level Probing Radar) standard EN302729-1/2. The devices are allowed to be used inside or outside of closed bins or tanks in countries of th EU and the EFTA. Precondition is that the country itself already has implemented the directive.

At present, the following countries have already implemented the directive:

Belgium, Bulgaria, Germany, Denmark, Estonia, France, Greece, Great Britain, Ireland, Iceland, Italy, Liechtenstein, Lithuania, Latvia, Malta, Netherland, Norway, Austria, Poland, Romania, Sweden, Switzerland, Slovakia, Spain, Czech Republic and Cyprus.

All countries not mentioned above are at present in the implementation phase.

For the use of the devices outside of closed bins or tanks, the following has to be observed:

1. The installation has to be done by trained personnel.
2. The antenna of the device has to be mounted on a fixed place and vertically to the bottom.

3. The mounting place has to be in a distance of at least 4 km to the mentioned astronomical stations or an appropriate permission has to be issued by the national authority. If the device is mounted at a distance of 4 to 40 km from the stations mentioned, the maximum mounting height is restricted to 15 m (49 ft).

Astronomical stations

Country	Name of the station	Geographical latitude	Geographical longitude
Germany	Effelsberg	50°31'32" N	06°53'00" E
Finland	Metsähovi	60°13'04" N	24°23'37" E
	Tuorla	60°24'56" N	24°26'31" E
France	Plateau de Bure	44°38'01" N	05°54'26" E
	Floirac	44°50'10" N	00°31'37" W
United Kingdom	Cambridge	52°09'59" N	00°02'20" E
	Damhall	53°09'22" N	02°32'03" W
	Jodrell Bank	53°14'10" N	02°18'26" W
	Knockin	52°47'24" N	02°59'45" W
	Pickmere	53°17'18" N	02°26'38" W
Italy	Medicina	44°31'14" N	11°38'49" E
	Noto	36°52'34" N	14°59'21" E
	Sardinia	39°29'50" N	09°14'40" E
Poland	Krakow Fort Skala	50°03'18" N	19°49'36" E
Russia	Dmitrov	56°26'00" N	37°27'00" E
	Kalyazin	57°13'22" N	37°54'01" E
	Pushchino	54°49'00" N	37°40'00" E
	Zelenchukskaya	43°49'53" N	41°35'32" E
Sweden	Onsala	57°23'45" N	11°55'35" E
Switzerland	Bleien	47°20'26" N	08°06'44" E
Spain	Yebes	40°31'27" N	03°05'22" W
	Robledo	40°25'38" N	04°14'57" W
Hungary	Penc	47°47'22" N	19°16'53" E

In general the requirements of EN 302729-1/2 have to be taken in consideration.

Radio standard EN302372-1/2

The devices Micropilot FMR50, FMR51, FMR52, FMR53, FMR54, FMR56 and FMR57 are conform with the TLPR (Tanks Level Probing Radar) standard EN302372-1/2 and can always be used in closed tanks or bins. For installation, points a to f in Annex B of EN302372-1 have to be taken into account.

FCC / Industry Canada

This device complies with Part 15 of the FCC rules. Operation is subject to the following two conditions: (1) This device may not cause harmful interference, and (2) this device must accept any interference received, including interference that may cause undesired operation.

Canada CNR-Gen Section 7.1.3

This device complies with Industry Canada licence-exempt RSS standard(s). Operation is subject to the following two conditions: (1) This device may not interference, and (2) this device must accept any interference, including interference that may cause undesired operation of the device.

Le présent appareil est conforme aux CNR d'Industrie Canada applicables aux appareils radio exempts de licence. L'exploitation est autorisée aux deux conditions suivantes : (1) l'appareil ne doit pas produire de brouillage, et (2) l'utilisateur de l'appareil doit accepter tout brouillage radioélectrique subi, même si le brouillage est susceptible d'en compromettre le fonctionnement.

[Any] changes or modifications not expressly approved by the party responsible for compliance could void the user's authority to operate the equipment.

In addition, the devices FMR50 [9], FMR51 [10], FMR52 [11], FMR56 and FMR57 are compliant with the LPR (Level probe radar) regulation also for free space applicactions according to the FCC Code of Federal Regulations, CFR 47, Part 15, Sections 15.205, 15.207, 15.209, 15.256 for antenna sizes bigger than 50 mm (2.0 in) [12]. For these applications the devices must be professionally installed in a downward operating position. In addition, the devices are not allowed to be mounted in a zone of 4 km around RAS stations and within a radius of 40 km around RAS stations the maxium operation height of devices is 15 m (49 ft) above ground.

Japanese radio approval

The devices FMR50, FMR51, FMR52, FMR54 and FMR57 comply with the Japanese Radio Law, Article 6, Section 1(1).

CRN approval

Some device versions have a CRN approval. Devices are CRN approved if the folowing two conditions are met:

- The device has a CSA approval (Product structure: Feature 010 "Approval")
- The device has a CRN approved process connection according to the following table.

Feature 100 of the product structure	Process connection
GGF	Gewinde ISO228 G1-1/2, PVDF
RGF	Thread ANSI MNPT1-1/2, PVDF
XWG	UNI slip on flange 3"/DN80/80, PP
XZG	UNI slip on flange 4"/DN100/100, PP
X0G	UNI slip on flange 6"/DN150/150, PP

- Process connections without CRN approval are not included in this table.
- Refer to the product structure to see which process connections are available for a specific device type.
- CRN approved devices are marked with the registration number OF15872.5C on the nameplate.

For device versions listed in the table below, the maximum allowed pressure is reduced if they have a CRN approval. For device versions not listed in the table below the pressure range as indicated in the "Process" chapter → 49 is not affected by the CRN approval.

Product	Antenna [1]	Prozessanschluss [2]	Dichtung [3]	max. pressure
FMR50/FMR56	BN: Horn 80mm/3"	XWG: UNI slip-on flange 3"		1.6 bar (23.2 psi)
		XZG: UNI slip-on flange 4"		1.5 bar (21.75 psi)
		X0G: UNI slip-on flange 6"		1.5 bar (21.75 psi)
	BR: Horn 100mm/4"	XZG: UNI slip-on flange 4"		12 bar (17.4 psi)
		X0G: UNI slip-on flange 6"		1.8 bar (26.1 psi)

1) Feature 070 of the product structure
2) Feature 100 of the product structure
3) Feature 090 of the product structure

Track record

FMR5x is the upgrade model of the corresponding FMR2xx series.

9) Except of FMR50-######BM* (Horn 40mm/1-1/2", PVDF encapsulated)
10) Except for FMR51-######BA* (Horn 40mm/1-1/2") and FMR51-######BB* (Horn 50mm/2")
11) Except for FMR52-######BO* (Horn 50mm/2", flush mount)
12)

Other standards and guidelines

- EN 60529
  Degrees of protection by housing (IP code)
- EN 61010-1
  Protection Measures for Electrical Equipment for Measurement, Control, Regulation and Laboratory Procedures.
- IEC/EN 61326
  "Emission in accordance with Class A requirements". Electromagnetic compatibility (EMC requirements)
- NAMUR NE 21
  Electromagnetic compatibility (EMC) of industrial process and laboratory control equipment.
- NAMUR NE 43
  Standardization of the signal level for the breakdown information of digital transmitters with analog output signal.
- NAMUR NE 53
  Software of field devices and signal-processing devices with digital electronics
- NAMUR NE 107
  Status classification as per NE107
- NAMUR NE 131
  Requirements for field devices for standard applications
- IEC61508
  Functional safety of electrical/electronic/programmable electronic safety-related systems

Ordering information

Ordering information

Detailed ordering information is available from the following sources:
- In the Product Configurator on the Endress+Hauser web site: www.endress.com → Choose your country → Products → Select measuring technology, software or components → Select product (picklists: measurement method, product family etc.) → Device support (right-hand column): Configure the selected product → The Product Configurator for the selected product is opened.
- From your Endress+Hauser Sales Center: www.addresses.endress.com

Product Configurator - the tool for individual product configuration
- Up-to-the-minute configuration data
- Depending on the device: Direct input of measuring point-specific information such as measuring range or operating language
- Automatic verification of exclusion criteria
- Automatic creation of the order code and its breakdown in PDF or Excel output format
- Ability to order directly in the Endress+Hauser Online Shop

3-point linearity protocol

The following notes must be taken into account if option F3 ("3 point linearity protocol") has been selected in feature 550 ("Calibration").

The 3 points of the linearity protocol are defined as follows:

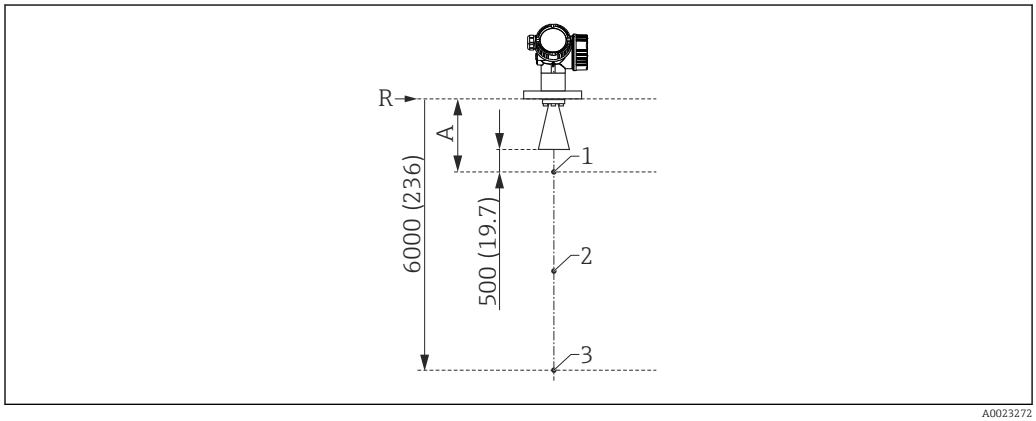

32 *Points of the 3-point linearity protocol; Dimensions: mm (in)*

A Distance from reference point R to first measuring point
R Reference point of the measurement
1 First measuring point
2 Second measuring point (centrally between first and third measuring point)
3 Third measuring point

Measuring point	Position
1st measuring point	▪ At the distance A from the reference point ▪ A = antenne length + antenna extension (if present) + 500 mm (19.7 in) ▪ Minimum distance: A_{min} = 1 000 mm (39.4 in)
2nd measuring point	centrally between 1st and 3rd measuring point
3rd measuring point	6 000 mm (236 in) below the reference point, R

The position of the measuring points may vary by ±1 cm (±0.04 in).

The linearity is checked under reference conditions.

5-point linearity protocol

The following notes must be taken into account if option F4 ("5 point linearity protocol") has been selected in feature 550 ("Calibration").

The five points of the linearity protocol are evenly distributetd across the measuring range (0% to 100%). In order to define the measuring range, **Empty calibration** (E) and **Full calibration** (F) have to be specified [13].

The following restrictions have to be taken into account when defining E and F:

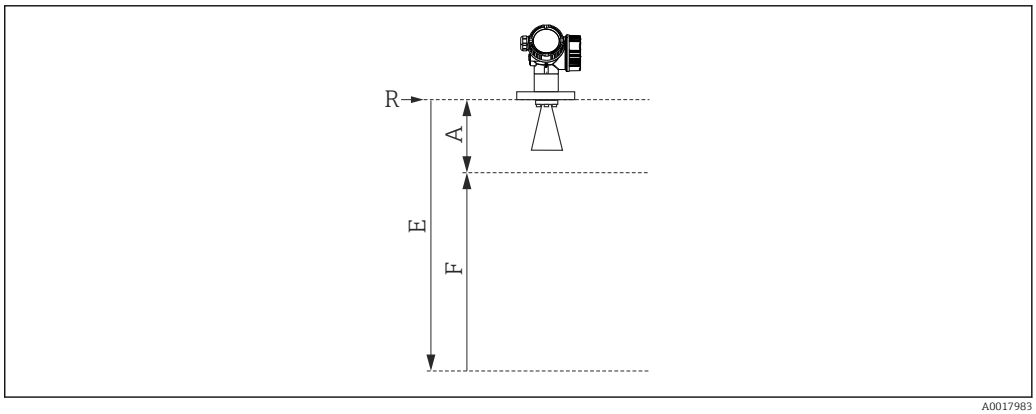

A0017983

Minimum distance between reference point (R) and 100% level	Minimum span	Maximum value for "Empty calibration"
A ≥ Antenna length + 200 mm (8 in) Minimum value: 400 mm (16 in)	F ≥ 400 mm (16 in)	E ≤ 24 m (79 ft)

The linearity is checked under reference conditions.

The selected values of **Empty calibration** and **Full calibration** are only used to record the linearity protocol and are reset to their probe specific default values thereafter. If values different from the default are required, they must be ordered as a customized parametrization → 74.

13) If E and F are not specified, probe dependent default values will be used instead.

Customized parametrization

If the option IJ "Customized parametrization HART", IK "Customized parametrization PA" or IL "Customized parametrization FF" has been selected in feature 570 "Service", customer specific presettings can be selected for the following parameters:

Parameter	Communication	Selection list / range of values
Setup → Distance unit	▪ HART ▪ PA ▪ FF	▪ in ▪ mm
Setup → Empty calibration	▪ HART ▪ PA ▪ FF	max. 70 m (230 ft)
Setup → Full calibration	▪ HART ▪ PA ▪ FF	max. < 70 m (230 ft)
Setup → Adv. Setup → Current output 1/2 → Damping	HART	0 to 999.9 s
Setup → Adv. Setup → Current output 1/2 → Failure mode	HART	▪ Min ▪ Max ▪ Last valid value
Setup → Adv. Setup → Current output 1/2 → Burst mode	HART	▪ Off ▪ On

Services

The following services can be selected via the product structure in the Product Configurator [14]:
- PWIS free (PWIS: paint wetting impairment substances)
- Customized parametrization HART → 📄 74
- Customized parametrization PA→ 📄 74
- Customized parametrization FF → 📄 74
- Without tooling DVD (FieldCare)

14) Feature 570 of the product structure

Accessories

Device-specific accessories **Weather protection cover**

Accessory	Description
Weather protection cover	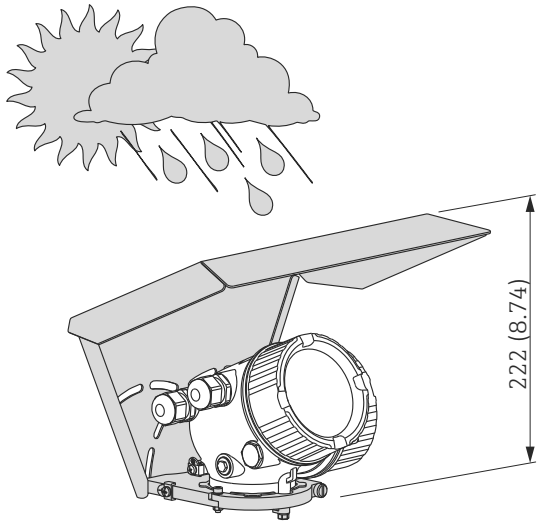 A0015466 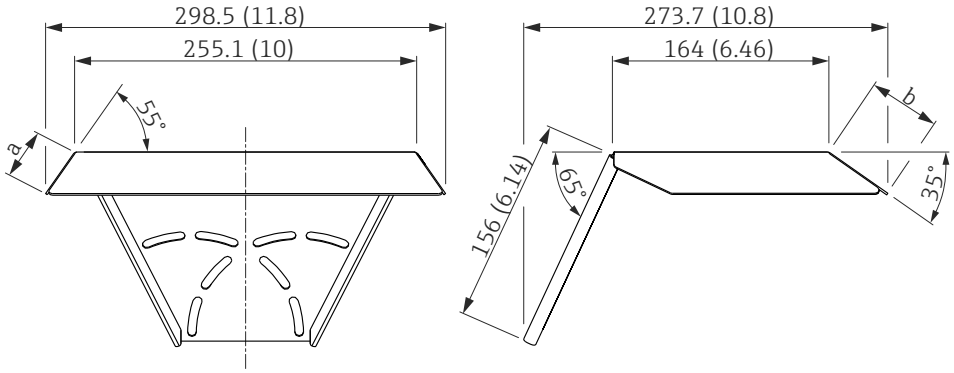 A0015472 *33 Weather protection cover; Dimensions: mm (in)* *a 37,8 mm (1,5 in)* *b 54 mm (2,1 in)* The weather protection cover can be ordered together with the device (product structure, feature 620 "Accessory Enclosed", option PB "Weather Protection Cover"). Alternatively, it can be separately ordered as an accessory; order code 71162242.

Mounting nut G1-1/2

Accessory	Description
Mounting nut G1-1/2	Drawing in preparation For FMR50 with with 40mm/1-1/2" horn antenna and G1-1/2" thread Material: PC Order code: 52014146

Variable flange seal for FMR50/FMR56

Accessory	Description
Variable flange seal for FMR50/FMR56	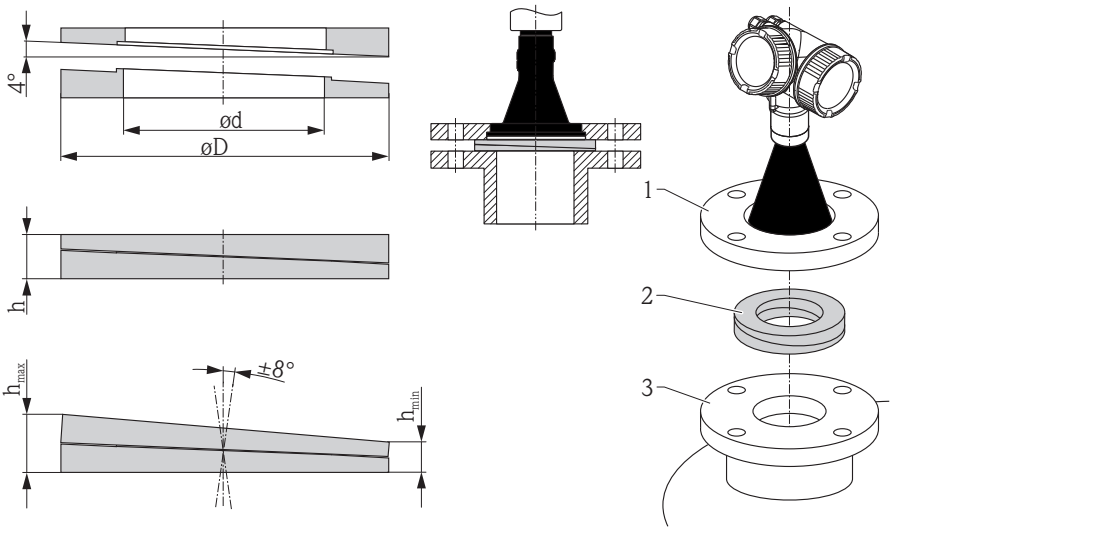 *1 UNI slip-on flange* *2 Variable flange seal* *3 Nozzle* The material and process conditions of the adjustable flange seal must fit the process properties (temperature, pressure, resistance).

Technical data: DN/JIS version			
Order code	71074263	71074264	71074265
Compatible with	DN80 PN10/40	DN100 PN10/16	▪ DN150 PN10/16 ▪ JIS 10K 150A
Length of screws	100 mm (3.9 in)	100 mm (3.9 in)	110 mm (4.3 in)
Size of screws	M14	M14	M18
Material	EPDM		
Process pressure	−0.1 to 0.1 bar (−1.45 to 1.45 psi)		
Process temperature	−40 to +80 °C (−40 to +176 °F)		
D	142 mm (5.59 in)	162 mm (6.38 in)	218 mm (8.58 in)
d	89 mm (3.5 in)	115 mm (4.53 in)	169 mm (6.65 in)
h	22 mm (0.87 in)	23.5 mm (0.93 in)	26.5 mm (1.04 in)
h_{min}	14 mm (0.55 in)	14 mm (0.55 in)	14 mm (0.55 in)
h_{max}	30 mm (1.18 in)	33 mm (1.3 in)	39 mm (1.45 in)

Accessory	Description			
	Technical data: ASME/JIS version			
	Order code	71249070	71249072	71249073
	Compatible with	▪ ASME 3" 150lbs ▪ JIS 80A 10K	ASME 4" 150lbs	ASME 6" 150lbs
	Length of screws	100 mm (3.9 in)	100 mm (3.9 in)	110 mm (4.3 in)
	Empfohlene Schraubengröße	M14	M14	M18
	Material	EPDM		
	Process pressure	−0.1 to 0.1 bar (−1.45 to 1.45 psi)		
	Process temperature	−40 to +80 °C (−40 to +176 °F)		
	D	133 mm (5.2 in)	171 mm (6.7 in)	219 mm (8.6 in)
	d	89 mm (3.5 in)	115 mm (4.53 in)	168 mm (6.6 in)
	h	22 mm (0.87 in)	23.5 mm (0.93 in)	26.5 mm (1.04 in)
	h_{min}	14 mm (0.55 in)	14 mm (0.55 in)	14 mm (0.55 in)
	h_{max}	30 mm (1.18 in)	33 mm (1.3 in)	39 mm (1.45 in)

Mounting bracket for wall or ceiling mounting of FMR50/FMR56

Accessory	Description
Mounting bracket for wall or ceiling mounting of FMR50/FMR56	A 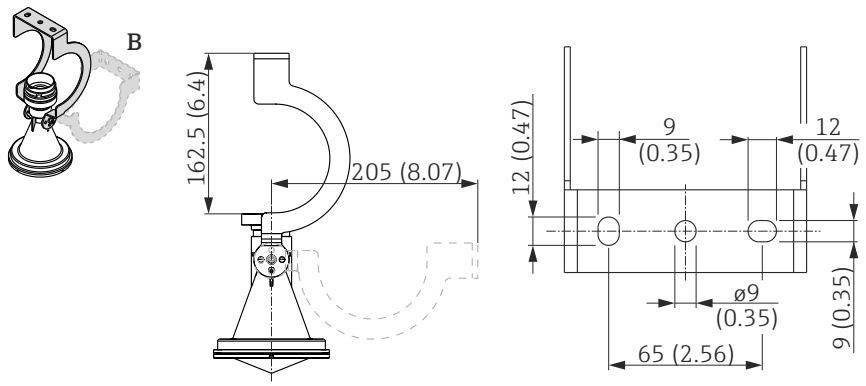 A0017746 *34 Mounting bracket for FMR50/FMR56 with horn antenna* *A Mounting at ceiling* *B Mounting at wall* ▪ **Material:** – Mounting bracket: 304 (1.4301) – Screws: A2 – Nordlock washer: A4 ▪ **Order code:** 71162776

Installation bracket for FMR50

Accessory	Description
Installation bracket for FMR50	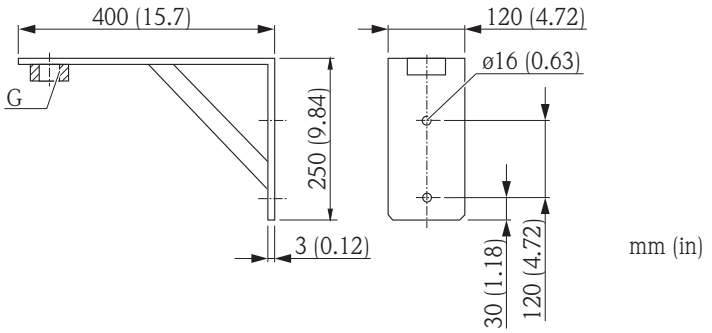 ▪ **Material:** 316Ti (1.4571) ▪ **Suited for antenna version** [1]: BM: Horn 40mm (1½"), PVDF encapsulated, -40...130°C (-40...266°F) ▪ **Suited for process connection** [2]: – GGF: Thread ISO228 G1½, PVDF – RGF: Thread ANSI MNPT1½, PVDF ▪ **Order code:** 942669-0000 The mounting bracket has no conductive connection to the transmitter housing. Danger of electrostatic charging. Connect the mounting bracket to the local potential equalization system.

1) Feature 070 of the product structure
2) Feature 100 of the product structure

Remote display FHX50

Accessory	Description
Remote display FHX50	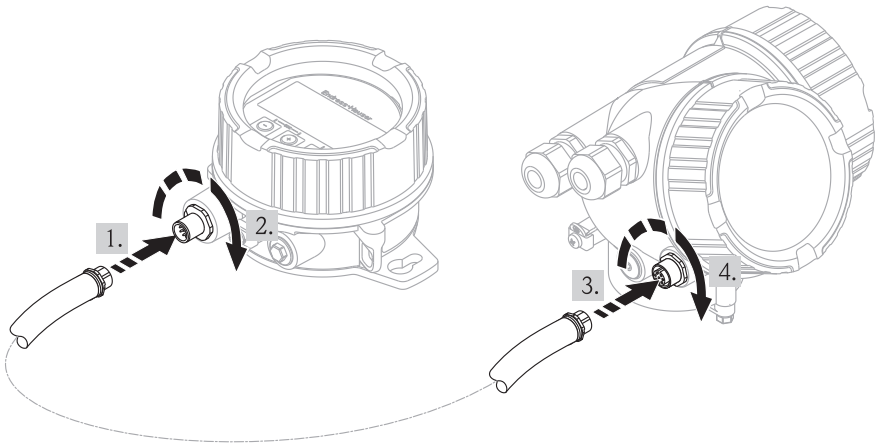 A0019128 ▪ Material: – Plastics PBT – 316L ▪ Ingress protection: IP68 / NEMA 6P and IP66 / NEMA 4x ▪ Suitable for the display modules: – SD02 (push buttons) – SD03 (touch control) ▪ Connection cable: – Cable with M12 plug; supplied with the FHX50; up to 30 m (98 ft) – Customer supplied standard cable; up to 60 m (196 ft) ▪ Ambient temperature: −40 to 80 °C (−40 to 176 °F) ▪ If the remote display is to be used, the device must be ordered in the version "Prepared for display FHX50" (feature 030, option L or M). For the FHX50, on the other hand, the option A: "Prepared for display FHX50" has to be selected in feature 050: "Option Measurement Device". ▪ If a device has not been ordered in the version "Prepared for display FHX50", but is nevertheless to be equipped with an FHX50, it is essential to select the option B: "Not prepared for display FHX50" in feature 050: "Option Measurement Device" of the FHX50. In this case, a retrofit kit, needed to prepare the device for the remote display, is supplied together with the FHX50. For transmitters with approval, application of the FHX50 may be restricted. A device may only be retrofitted with the FHX50 if option L or M ("Prepared for FHX50") is quoted under *Basic specifications*, position 4 "Display, operation" in the associated Safety Instructions (XA). In addition to this, observe the Safety Instructions (XA) of the FHX50. Do not retrofit transmitters with: ▪ approval for use in areas with combustible dusts (Dust-Ex approval) ▪ type of protection Ex nA For details refer to the document SD01007F.

Overvoltage protection

Accessory	Description
Overvoltage protection for 2-wire-devices OVP10 (1 channel) OVP20 (2 channel)	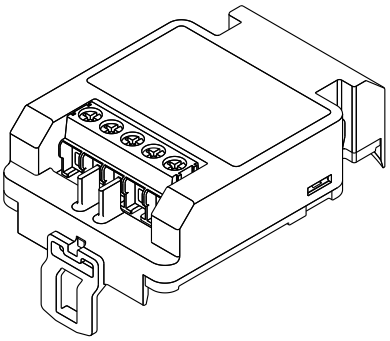 A0021734 **Technical data** ▪ Resistance per channel: 2 * 0.5 Ω_{max} ▪ Threshold DC voltage: 400 to 700 V ▪ Threshold impulse voltage: < 800 V ▪ Capacitance at 1 MHz: < 1.5 pF ▪ Nominal arrest impulse voltage (8/20 µs): 10 kA ▪ Suited for wire cross-sections: 0.2 to 2.5 mm² (24 to 14 AWG) **Ordering with device** The overvoltage protection module is preferably ordered with the device. See product structure, feature 610 "Accessory mounted", option NA "Overvoltage protection". Separate ordering of the module is only necessary if a device is to retrofitted with the overvoltage protection. **Order code for retrofitting** ▪ For 1-channel devices (feature 020, option A) OVP10: 71128617 ▪ For 2-channel devices (feature 020, option B, C, E or G) OVP20 : 71128619 **Hosuing lid for retrofitting** In order to keep the necessary safety distances, the housing lid needs to be replaced if the device is retrofitted with the overvoltage protection. Depending on the housing type, the order code of the suitable lid is as follows: ▪ GT18 housing: Lid 71185516 ▪ GT19 housing: Lid 71185518 ▪ GT20 housing: Lid 71185516 **Restrictions for retrofitting** Depending on the approval of the transmitter the usage of the OVP module may be restricted. A device may only be retrofitted with an OVP module if the option *NA* (overvoltage protection) is quoted unter *Optional Specifications* in the Safety Instructions (XA) pertaining to the device. For details refer to SD01090F.

Communication-specific accessories

Accessory	Description
Commubox FXA195 HART	For intrinsically safe HART communication with FieldCare via the USB interface. For details refer to Technical Information TI00404F

Accessory	Description
Commubox FXA291	Connects Endress+Hauser field devices with CDI interface (= Endress+Hauser Common Data Interface) to the USB interface of a computer. Order code: 51516983 For details refer to Technical Information TI00405C

Accessory	Description
HART Loop Converter HMX50	Evaluates the dynamic HART variables and converts them to analog current signals or limit values. Order code: 71063562 For details refer to Technical Information TI00429F and Operating Instructions BA00371F

Accessory	Description
WirelessHART Adapter SWA70	Connects field devices to a WirelessHART network. The WirelessHART adapter can be mounted directly at a HART device and is easly integrated into an existing HART network. It ensures safe data transmission and can be operated in parallel with other wireless networks. For details refer to Operating Instructions BA00061S

Accessory	Description
Fieldgate FXA320	Gateway for remote monitoring of connected 4-20mA measuring devices via web browser. For details refer to Technical Information TI00025S and Operating Instructions BA00053S

Accessory	Description
Fieldgate FXA520	Gateway for remote diagnosis and parametrization of connected HART measuring devices via web browser. For details refer to Technical Information TI00025S and Operating Instructions BA00051S

Accessory	Description
Field Xpert SFX350	Field Xpert SFX350 is a mobile computer for commissioning and maintenance. It enables efficient device configuration and diagnostics for HART and FOUNDATION fieldbus devices in the **non-Ex area**. For details, see Operating Instructions BA01202S

Accessory	Description
Field Xpert SFX370	Field Xpert SFX370 is a mobile computer for commissioning and maintenance. It enables efficient device configuration and diagnostics for HART and FOUNDATION fieldbus devices in the **non-Ex area** and the **Ex area**. For details, see Operating Instructions BA01202S

Service-specific accessories

Accessory	Description
FieldCare	Endress+Hauser's FDT-based Plant Asset Management tool. Helps to configure and maintain all field devices of your plant. By supplying status information it also supports the diagnosis of the devices. For details refer to Operating Instructions BA00027S and BA00059S.

System components

Accessory	Description
Graphic Data Manager Memograph M	The graphic data manager Memograph M provides information on all the relevant process variables. Measured values are recorded correctly, limit values are monitored and measuring points analyzed. The data are stored in the 256 MB internal memory and also on an SD card or USB stick. For details refer to Technical Information TI00133R and Operating Instructions BA00247R
RN221N	Active barrier with power supply for safe separation of 4 to 20 mA current circuits. Provides bi-directional HART transmission. For details refer to Technical Information TI00073R and Operating Instructions BA00202R
RNS221	Transmitter supply for 2-wire sensors or transmitters exclusively for non-Ex areas. Provides bi-directional communication using the HART communication sockets. For details refer to Technical Information TI00081R and Operating Instructions KA00110R

Documentation

The following document types are available:
- On the CD supplied with the device
- In the Download Area of the Endress+Hauser Internet site: www.endress.com → Download

Standard documentation

Micropilot FMR50

Correlation of documentations to the device:

Device	Power supply, output	Communikation	Document type	Document code
FMR50	A, B, C, K, L	HART	Operating Instructions	BA01045F/00/EN
			Brief Operating Instructions	KA01099F/00/EN
			Description of Device Parameters	GP01014F/00/EN
	G	PROFIBUS PA	Operating Instructions	BA01124F/00/EN
			Brief Operating Instructions	KA01128F/00/EN
			Description of Device Parameters	GP01018F/00/EN
	E	FOUNDATION Fieldbus	Operating Instructions	BA01120F/00/EN
			Brief Operating Instructions	KA01124F/00/EN
			Description of Device Parameters	GP01017F/00/EN

Supplementary documentation

Device	Document type	Document code
Fieldgate FXA520	Technical Information	TI369F/00/EN
Tank Side Monitor NRF590	Technical Information	TI402F/00/EN
	Operating Instructions	BA256F/00/EN
	Description of Device Parameters	BA257F/00/EN

Safety Instructions (XA)

Depending on the approval, the following Safety Instructions (XA) are supplied with the device. They are an integral part of the Operating Instructions.

			Feature 020 "Power Supply; Output"				
Feature 010	Approval	Available for	A [1]	B [2]	C [3]	E [4]/G [5]	K [6]/L [7]
BA	ATEX: II 1 G Ex ia IIC T6-T1 Ga	FMR50	XA00677F	XA01224F	XA001225	XA00685F	-
BB	ATEX: II 1/2 G Ex ia IIC T6-T1 Ga/Gb	FMR50	XA00677F	XA01224F	XA001225	XA00685F	-
BC	ATEX: II 1/2 G Ex d [ia] IIC T6-T1 Ga/Gb	FMR50	XA00680F	XA00680F	XA01232F	XA00688F	XA01233F
BG	ATEX: II 3 G Ex nA IIC T6-T1 Gc	FMR50	XA00679F	XA01229F	XA01230F	XA00687F	XA01231F
BH	ATEX: II 3 G Ex ic IIC T6-T1 Gc	FMR50	XA00679F	XA01229F	XA01230F	XA00687F	XA01231F
B2	ATEX: II 1/2 G Ex ia IIC T6-T1 Ga/Gb ATEX: II 1/2 D Ex ia IIIC Txx°C Da/Db	FMR50	XA00683F	XA00683F	XA01235F	XA00691F	-
B3	ATEX: II 1/2 G Ex d [ia] IIC T6-T1 Ga/Gb ATEX: II 1/2 D Ex ta IIIC Txx°C Da/Db	FMR50	XA00684F	XA00684F	XA00684F	XA00692F	XA01236F
B4	ATEX:II 1/2 G Ex ia IIC T6-T1 Ga/Gb ATEX: II 1/2 G Ex d [ia] IIC T6-T1 Ga/Gb	FMR50	XA00681F	XA00681F	XA01234F	XA00689F	-
CB	CSA C/US XP Cl.I Div.1 Gr.A-D	FMR50	XA01112F	XA01112F	XA01112F	XA01114F	-
CC	CSA C/US XP Cl.I Div.1 Gr.A-D	FMR50	XA01113F	XA01113F	XA01113F	XA01115F	XA01113F

			Feature 020 "Power Supply; Output"				
Feature 010	**Approval**	**Available for**	**A** [1]	**B** [2]	**C** [3]	**E** [4]**/G** [5]	**K** [6]**/L** [7]
C2	CSA C/US IS Cl.I,II,III Div.1 Gr.A-G, NI Cl.1 Div. 2, Ex ia	FMR50	XA01112F	XA01112F	XA01112F	XA01114F	-
C3	CSA C/US XP Cl.I,II,III Div.1 Gr.A-G, NI Cl.1 Div.2, Ex d	FMR50	XA01113F	XA01113F	XA01113F	XA01115F	XA01113F
FA	FM IS Cl.I Div.1 Gr.A-D	FMR50	XA01116F	XA01116F	XA01116F	XA01118F	-
FB	FM IS Cl.I,II,III Div.1 Gr.A-G, AEx ia, NI Cl.1 Div.2	FMR50	XA01116F	XA01116F	XA01116F	XA01118F	-
FC	FM XP Cl.I Div.1 Gr.A-D	FMR50	XA01117F	XA01117F	XA01117F	XA01119F	XA01117F
FD	FM XP Cl.I,II,III Div.1 Gr.A-G, AEx d, NI Cl.1 Div.2	FMR50	XA01117F	XA01117F	XA01117F	XA01119F	XA01117F
IA	IECEx: Ex ia IIC T6-T1 Ga	FMR50	XA00677F	XA01224F	XA001225	XA00685F	-
IB	IECEx: Ex ia IIC T6-T1 Ga/Gb	FMR50	XA00677F	XA01224F	XA001225	XA00685F	-
IC	IECEx: Ex d [ia] IIC T6-T1 Ga/Gb	FMR50	XA00680F	XA00680F	XA01232F	XA00688F	XA01233F
IG	IECEx: Ex nA IIC T6-T1 Gc	FMR50	XA00679F	XA01229F	XA01230F	XA00687F	XA01231F
IH	IECEx: Ex ic IIC T6-T1 Gc	FMR50	XA00679F	XA01229F	XA01230F	XA00687F	XA01231F
I2	IECEx: Ex ia IIC T6-T1 Ga/Gb IECEx: Ex ia IIIC Txx°C Da/Db	FMR50	XA00683F	XA00683F	XA01235F	XA00691F	-
I3	IECEx: Ex d [ia] IIC T6-T1 Ga/Gb IEXEx: Ex ta IIIC Txx°C Da/Db	FMR50	XA00684F	XA00684F	XA00684F	XA00692F	XA01236F
I4	IECEx: Ex ia IIC T6-T1 Ga/Gb IECEx: Ex d [ia] IIC T6-T1 Ga/Gb	FMR50	XA00681F	XA00681F	XA01234F	XA00689F	-
KA	KC Ex ia IIC T6 Ga	FMR50	XA01045F	XA01045F	XA01045F	XA01047F	-
KB	KC Ex ia IIC T6 Ga/Gb	FMR50	XA01045F	XA01045F	XA01045F	XA01047F	-
KC	KC Ex d[ia] IIC T6	FMR50	XA01046F	XA01046F	XA01046F	XA01048F	XA01046F
MA	INMETRO: Ex ia IIC T6 Ga	FMR50	XA01286F	XA01287F	XA01288F	XA01296F	-
MC	INMETRO: Ex d[ia] IIC T6 Ga/Gb	FMR50	XA01292F	XA01292F	XA01293F	XA01298F	XA01294F
MH	INMETRO: Ex ic IIC T6 Gc	FMR50	XA01289F	XA01290F	XA01291F	XA01297F	-
NA	NEPSI Ex ia IIC T6 Ga	FMR50	XA01199F	XA01199F	XA01199F	XA01208F	-
NB	NEPSI Ex ia IIC T6 Ga/Gb	FMR50	XA01199F	XA01199F	XA01199F	XA01208F	-
NC	NEPSI Ex d[ia] IIC T6 Ga/Gb	FMR50	XA01202F	XA01202F	XA01202F	XA01211F	XA01202F
NG	NEPSI Ex nA II T6 Gc	FMR50	XA01201F	XA01201F	XA01201F	XA01210F	XA01201F
NH	NEPSI Ex ic IIC T6 Gc	FMR50	XA01201F	XA01201F	XA01201F	XA01210F	XA01201F
N2	NEPSI Ex ia IIC T6 Ga/Gb, Ex iaD 20/21 T85... 90oC	FMR50	XA01205F	XA01205F	XA01205F	XA01214F	-
N3	NEPSI Ex d[ia] IIC T6 Ga/Gb, DIP A20/21 T85...90oC IP66	FMR50	XA01206F	XA01206F	XA01206F	XA01215F	XA01206F
8A	FM/CSA IS+XP Cl.I,II,III Div.1 Gr.A-G	FMR50	▪ XA01112F ▪ XA01113F ▪ XA01116F ▪ XA01117F	▪ XA01112F ▪ XA01113F ▪ XA01116F ▪ XA01117F	▪ XA01112F ▪ XA01113F ▪ XA01116F ▪ XA01117F	▪ XA01114F ▪ XA01115F ▪ XA01118F ▪ XA01119F	-

1) 2-wire; 4-20mA HART
2) 2-wire; 4-20mA HART, switch output
3) 2-wire; 4-20mA HART, 4-20mA
4) 2-wire; FOUNDATION Fieldbus, switch output
5) 2-wire; PROFIBUS PA, switch output
6) 4-wire 90-253VAC; 4-20mA HART
7) 4-wire 10.4-48VDC; 4-20mA HART

For certified devices the relevant Safety Instructions (XA) are indicated on the nameplate.

If the device is prepared for the remote display FHX50 (product structure: feature 030: Display, Operation", option L or M), the Ex marking of some certificates changes according to the following table [15]:

Feature 010 ("Approval")	Feature 030 ("Display, Operation")	Ex marking
BG	L or M	ATEX II 3G Ex nA [ia Ga] IIC T6 Gc
BH	L or M	ATEX II 3G Ex ic [ia Ga] IIC T6 Gc
B3	L or M	ATEX II 1/2G Ex d [ia] IIC T6 Ga/Gb, ATEX II 1/2D Ex ta [ia Db] IIIC Txx°C Da/Db
IG	L or M	IECEx Ex nA [ia Ga] IIC T6 Gc
IH	L or M	IECEx Ex ic [ia Ga] IIC T6 Gc
I3	L or M	IECEx Ex d [ia] IIC T6 Ga/Gb, IECEx Ex ta [ia Db] IIIC Txx°C Da/Db
MH	L or M	Ex ic [ia Ga] IIC T6 Gc
NG	L or M	NEPSI Ex nA [ia Ga] IIC T6-T1 Gc
NH	L or M	NEPSI Ex ic [ia Ga] IIC T6-T1 Gc
N3	L or M	NEPSI Ex d [ia] IIC T6-T1 Ga/Gb, DIP A20/21 [ia D] TA, Txx°C IP6X

15) The marking of certificates not mentioned in this table are not affected by the FHX50.

Registered trademarks

HART®
Registered trademark of the HART Communication Foundation, Austin, USA

PROFIBUS®
Registered trademark of the PROFIBUS User Organization, Karlsruhe, Germany

FOUNDATION™ Fieldbus
Registered trademark of the Fieldbus Foundation, Austin, Texas, USA

KALREZ®, VITON®
Registered trademark of DuPont Performance Elastomers L.L.C., Wilmington, USA

TEFLON®
Registered trademark of E.I. DuPont de Nemours & Co., Wilmington, USA

TRI CLAMP®
Registered trademark of Alfa Laval Inc., Kenosha, USA

Patents

This product may be protected by at least one of the following patents.

Further patents are pending.

US Patents	EP Patents
5.948.979	882 957
6.087.978	955 527
6.140.940	-
6.155.112	834 722
-	882 955
6.266.022	1 083 413
6.295.874	210 567
6.512.358	1 301 914
6.606.904	-
6.640.628	-
6.679.115	1 360 523
-	1 389 337
6.779.397	-
7.201.050	-
7.412.337	-
7.552.634	-
7.730.760	-
7.819.002	-
-	1 774 616
7.966.141	-
8.040.274	-
8.049.371	-



www.addresses.endress.com

Endress+Hauser

People for Process Automation

TI01046D/06/EN/09.20
71453947
2020-01-01

TAG:
20-FIT-301-1/2/3/4
20-FIT-602
20-FIT-507-1/2/3/4
16-FIT-707

Technical Information
Proline Promag W 400

Electromagnetic flowmeter



Versatile standard flowmeter for the water and wastewater industry

Application

- The bidirectional measuring principle is virtually independent of pressure, density, temperature and viscosity
- Ideal for water measurement, e.g. drinking water, utility water and industrial/municipal wastewater

Device properties
- International drinking water approvals
- Degree of protection IP68 (Type 6P enclosure)
- Approved for custody transfer to MI-001/OIML R49
- Transmitter housing made of durable polycarbonate or aluminum
- WLAN access
- Integrated data logger: measured values monitoring

Ihre Vorteile

- Reliable measurement at constant accuracy with 0 x DN inlet run and no pressure loss
- Flexible engineering – sensor with fixed or lap-joint process connections
- Application fitness – EN ISO 12944 corrosion protection for underground or underwater installation
- Improved plant availability – sensor compliant with industry-specific requirements
- Safe operation – no need to open the device due to display with touch control, background lighting
- Time-saving local operation without additional software and hardware – integrated web server
- Integrated verification – Heartbeat Technology

Endress+Hauser
People for Process Automation

Table of contents

About this document 4
Symbols 4

Function and system design 5
Measuring principle 5
Measuring system 6
Equipment architecture 7
Safety 7

Input 8
Measured variable 8
Measuring range 9
Operable flow range 12
Input signal 12

Output 13
Output signal 13
Signal on alarm 14
Low flow cut off 16
Galvanic isolation 16
Protocol-specific data 16

Power supply 21
Terminal assignment 21
Pin assignment, device plug 23
Supply voltage 24
Power consumption 24
Current consumption 24
Power supply failure 24
Electrical connection 25
Potential equalization 29
terminals 30
Cable entries 31
Cable specification 31

Performance characteristics 33
Reference operating conditions 33
Maximum measured error 33
Repeatability 35
Influence of ambient temperature 35

Installation 35
Mounting location 36
Orientation 37
Inlet and outlet runs 38
Adapters 38
Length of connecting cable 39
Mounting the transmitter housing 40
Special mounting instructions 40

Environment 41
Ambient temperature range 41
Storage temperature 42
Atmosphere 42
Degree of protection 42
Vibration- and shock-resistance 42
Mechanical load 43
Electromagnetic compatibility (EMC) 43

Process 43
Medium temperature range 43
Conductivity 44
Pressure-temperature ratings 44
Pressure tightness 47
Flow limit 48
Pressure loss 48
System pressure 49
Vibrations 49

Custody transfer mode 50

Mechanical construction 50
Dimensions in SI units 50
Dimensions in US units 68
Weight 78
Measuring tube specification 81
Materials 83
Fitted electrodes 85
Process connections 86
Surface roughness 86

Human interface 86
Operating concept 86
Languages 86
Local display 87
Remote operation 87
Service interface 89
Supported operating tools 90
HistoROM data management 92

Certificates and approvals 93
CE mark 93
RCM-tick symbol 93
Ex approval 93
Drinking water approval 93
HART certification 93
Certification PROFIBUS 93
Modbus RS485 certification 93
EtherNet/IP certification 93
Radio approval 93
Measuring instrument approval 93
Other standards and guidelines 93

Ordering information 94
Product generation index 94

Application packages 94
Cleaning 95
Diagnostics functions 95
Heartbeat Technology 95

Accessories 95
Device-specific accessories 96

Communication-specific accessories 96
Service-specific accessories 97
System components 97

Supplementary documentation 98
Standard documentation 98
Supplementary device-dependent documentation 98

Registered trademarks 99

About this document

Symbols

Electrical symbols

Symbol	Meaning
	Direct current
	Alternating current
	Direct current and alternating current
	**Ground connection** A grounded terminal which, as far as the operator is concerned, is grounded via a grounding system.
	**Protective Earth (PE)** A terminal which must be connected to ground prior to establishing any other connections. The ground terminals are situated inside and outside the device: ▪ Inner ground terminal: Connects the protectiv earth to the mains supply. ▪ Outer ground terminal: Connects the device to the plant grounding system.

Communication symbols

Symbol	Meaning
	**Wireless Local Area Network (WLAN)** Communication via a wireless, local network.
	**Bluetooth** Wireless data transmission between devices over a short distance.
	**LED** Light emitting diode is off.
	**LED** Light emitting diode is on.
	**LED** Light emitting diode is flashing.

Symbols for certain types of information

Symbol	Meaning
	**Permitted** Procedures, processes or actions that are permitted.
	**Preferred** Procedures, processes or actions that are preferred.
	**Forbidden** Procedures, processes or actions that are forbidden.
	**Tip** Indicates additional information.
	Reference to documentation.
	Reference to page.
	Reference to graphic.
	Visual inspection.

Symbols in graphics

Symbol	Meaning
1, 2, 3, ...	Item numbers
1., 2., 3., ...	Series of steps
A, B, C, ...	Views
A-A, B-B, C-C, ...	Sections
	Hazardous area
	Safe area (non-hazardous area)
	Flow direction

Function and system design

Measuring principle

Following *Faraday's law of magnetic induction*, a voltage is induced in a conductor moving through a magnetic field.

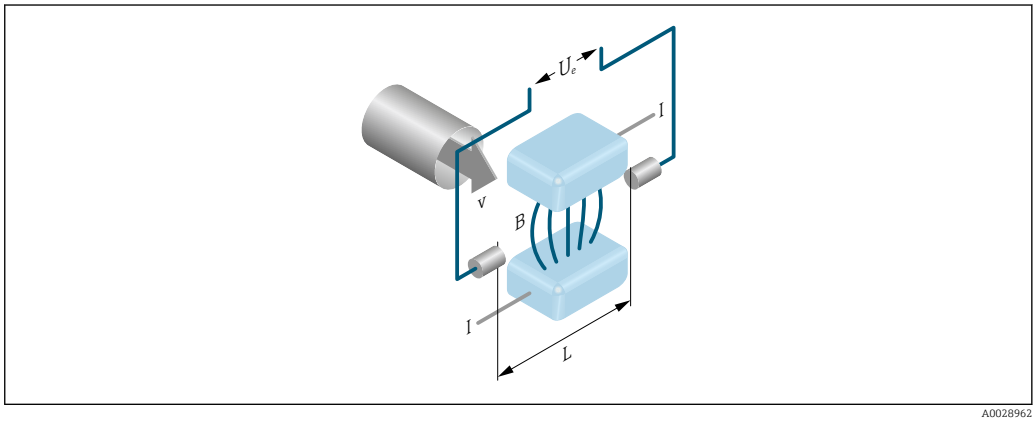

A0028962

Ue *Induced voltage*
B *Magnetic induction (magnetic field)*
L *Electrode spacing*
I *Current*
v *Flow velocity*

In the electromagnetic measuring principle, the flowing medium is the moving conductor. The voltage induced (U_e) is proportional to the flow velocity (v) and is supplied to the amplifier by means of two measuring electrodes. The flow volume (Q) is calculated via the pipe cross-section (A). The DC magnetic field is created through a switched direct current of alternating polarity.

Formulae for calculation

- Induced voltage $U_e = B \cdot L \cdot v$
- Volume flow $Q = A \cdot v$

Measuring system

The device consists of a transmitter and a sensor.

Two device versions are available:
- Compact version – transmitter and sensor form a mechanical unit.
- Remote version - transmitter and sensor are mounted in separate locations.

Transmitter

Proline 400
 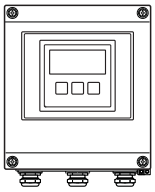
A0017117
	Device versions and materials
	▪ Compact version: compact housing
	  ▪ Polycarbonate plastic
	  ▪ Aluminum, AlSi10Mg, coated
	▪ Remote version: wall-mount housing
	  ▪ Polycarbonate plastic
	  ▪ Aluminum, AlSi10Mg, coated
	
	Configuration:
	▪ External operation via four-line, illuminated local display with touch control and guided menus ("Make-it-run" wizards) for applications
	▪ Via operating tools (e.g. FieldCare)
	▪ Via Web browser (e.g. Microsoft Internet Explorer)
	▪ Also for device version with EtherNet/IP output:
	  ▪ Via Add-on Profile Level 3 for automation system from Rockwell Automation
	  ▪ Via Electronic Data Sheet (EDS)
	▪ Also for device version with PROFIBUS DP output:
	Via PDM driver for Siemens automation system

Sensor

Promag W *Lap joint flange, lap joint flange, stamped plate or fixed flange with aluminum half-shell housing: DN 25 to 300 (1 to 12")* 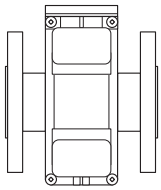 A0017040	▪ Nominal diameter range: DN 25 to 2400 (1 to 90") ▪ Materials→ 🖹 83
Fixed flange with fully welded housing made of carbon steel: DN 25 to 300 (1 to 12") 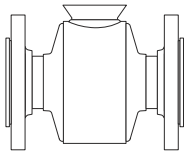 A0022673	

Fixed flange with fully welded housing made of carbon steel: DN 350 to 2400 (14 to 90")

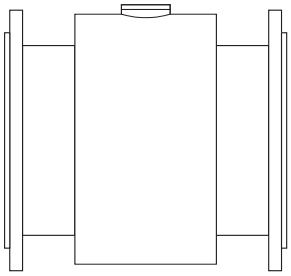

A0017041

Equipment architecture

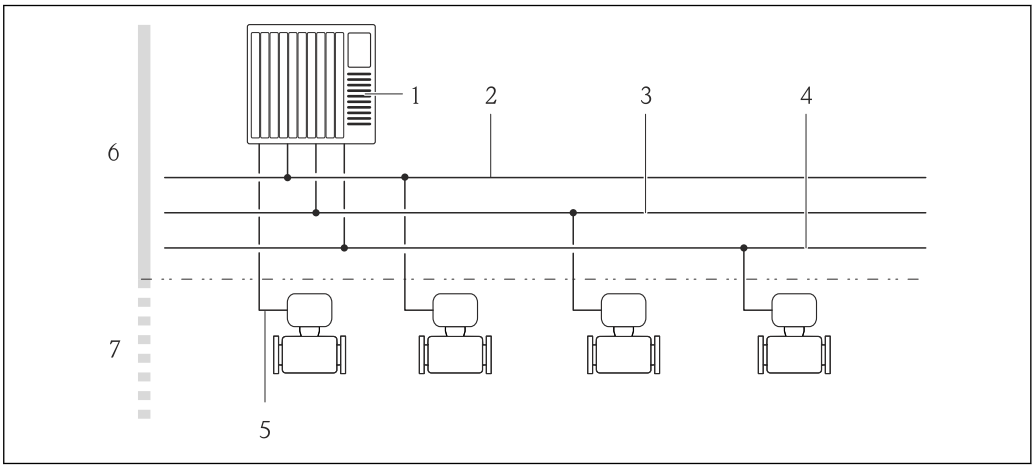

A0037833

1 *Possibilities for integrating measuring devices into a system*

1 *Control system (e.g. PLC)*
2 *EtherNet/IP*
3 *PROFIBUS DP*
4 *Modbus RS485*
5 *4-20 mA HART, pulse/frequency/switch output*
6 *Non-hazardous area*
7 *Non-hazardous area and Zone 2/Div. 2*

Safety

IT security

Our warranty is valid only if the device is installed and used as described in the Operating Instructions. The device is equipped with security mechanisms to protect it against any inadvertent changes to the settings.

IT security measures, which provide additional protection for the device and associated data transfer, must be implemented by the operators themselves in line with their security standards.

Device-specific IT security

The device offers a range of specific functions to support protective measures on the operator's side. These functions can be configured by the user and guarantee greater in-operation safety if used correctly. An overview of the most important functions is provided in the following section.

Protecting access via hardware write protection

Write access to the device parameters via the local display or operating tool (e.g. FieldCare, DeviceCare) can be disabled via a write protection switch (DIP switch on the motherboard). When hardware write protection is enabled, only read access to the parameters is possible.

Hardware write protection is disabled when the device is delivered.

Protecting access via a password

Different passwords are available to protect write access to the device parameters or access to the device via the WLAN interface.

- User-specific access code
  Protect write access to the device parameters via the local display, Web browser or operating tool (e.g. FieldCare, DeviceCare). Access authorization is clearly regulated through the use of a user-specific access code.
- WLAN passphrase
  The network key protects a connection between an operating unit (e.g. notebook or tablet) and the device via the WLAN interface which can be ordered as an option.
- Infrastructure mode
  When the device is operated in infrastructure mode, the WLAN passphrase corresponds to the WLAN passphrase configured on the operator side.

User-specific access code

Write access to the device parameters via the local display or operating tool (e.g. FieldCare, DeviceCare) can be protected by the modifiable, user-specific access code.

WLAN passphrase: Operation as WLAN access point

A connection between an operating unit (e.g. notebook or tablet) and the device via the WLAN interface, which can be ordered as an optional extra, is protected by the network key. The WLAN authentication of the network key complies with the IEEE 802.11 standard.

When the device is delivered, the network key is pre-defined depending on the device. It can be changed via the **WLAN settings** submenu in the **WLAN passphrase** parameter.

Infrastructure mode

A connection between the device and WLAN access point is protected by means of an SSID and passphrase on the system side. Please contact the relevant system administrator for access.

General notes on the use of passwords

- The access code and network key supplied with the device should be changed during commissioning.
- Follow the general rules for generating a secure password when defining and managing the access code or network key.
- The user is responsible for the management and careful handling of the access code and network key.

Access via Web server

The device can be operated and configured via a Web browser with the integrated Web server. The connection is via the service interface (CDI-RJ45) or the WLAN interface. For device versions with the EtherNet/IP and PROFINET communication protocols, the connection can also be established via the terminal connection for signal transmission with EtherNet/IP or PROFINET (RJ45 connector).

The Web server is enabled when the device is delivered. The Web server can be disabled if necessary (e.g. after commissioning) via the **Web server functionality** parameter.

The device and status information can be hidden on the login page. This prevents unauthorized access to the information.

For detailed information on device parameters, see:
The "Description of Device Parameters" document → 98

Input

Measured variable

Direct measured variables

- Volume flow (proportional to induced voltage)
- Electrical conductivity

In custody transfer: only volume flow

Calculated measured variables

Mass flow

Measuring range

Typically v = 0.01 to 10 m/s (0.03 to 33 ft/s) with the specified accuracy

Electrical conductivity: ≥ 5 µS/cm for liquids in general

Flow characteristic values in SI units: DN 25 to 125 (1 to 4")

Nominal diameter		Recommended flow	Factory settings		
		min./max. full scale value (v ~ 0.3/10 m/s)	Full scale value current output (v ~ 2.5 m/s)	Pulse value (~ 2 pulse/s)	Low flow cut off (v ~ 0.04 m/s)
[mm]	[in]	[dm³/min]	[dm³/min]	[dm³]	[dm³/min]
25	1	9 to 300	75	0.5	1
32	–	15 to 500	125	1	2
40	1 ½	25 to 700	200	1.5	3
50	2	35 to 1 100	300	2.5	5
65	–	60 to 2 000	500	5	8
80	3	90 to 3 000	750	5	12
100	4	145 to 4 700	1200	10	20
125	–	220 to 7 500	1850	15	30

Flow characteristic values in SI units: DN 150 to 2400 (6 to 90")

Nominal diameter		Recommended flow	Factory settings		
		min./max. full scale value (v ~ 0.3/10 m/s)	Full scale value current output (v ~ 2.5 m/s)	Pulse value (~ 2 pulse/s)	Low flow cut off (v ~ 0.04 m/s)
[mm]	[in]	[m³/h]	[m³/h]	[m³]	[m³/h]
150	6	20 to 600	150	0.025	2.5
200	8	35 to 1 100	300	0.05	5
250	10	55 to 1 700	500	0.05	7.5
300	12	80 to 2 400	750	0.1	10
350	14	110 to 3 300	1000	0.1	15
375	15	140 to 4 200	1200	0.15	20
400	16	140 to 4 200	1200	0.15	20
450	18	180 to 5 400	1500	0.25	25
500	20	220 to 6 600	2000	0.25	30
600	24	310 to 9 600	2500	0.3	40
700	28	420 to 13 500	3500	0.5	50
750	30	480 to 15 000	4000	0.5	60
800	32	550 to 18 000	4500	0.75	75
900	36	690 to 22 500	6000	0.75	100
1000	40	850 to 28 000	7000	1	125
–	42	950 to 30 000	8000	1	125
1200	48	1 250 to 40 000	10000	1.5	150
–	54	1 550 to 50 000	13000	1.5	200
1400	–	1 700 to 55 000	14000	2	225
–	60	1 950 to 60 000	16000	2	250

Nominal diameter		Recommended flow	Factory settings		
		min./max. full scale value (v ~ 0.3/10 m/s)	Full scale value current output (v ~ 2.5 m/s)	Pulse value (~ 2 pulse/s)	Low flow cut off (v ~ 0.04 m/s)
[mm]	[in]	[m³/h]	[m³/h]	[m³]	[m³/h]
1600	–	2 200 to 70 000	18000	2.5	300
–	66	2 500 to 80 000	20500	2.5	325
1800	72	2 800 to 90 000	23000	3	350
–	78	3 300 to 100 000	28500	3.5	450
2000	–	3 400 to 110 000	28500	3.5	450
–	84	3 700 to 125 000	31000	4.5	500
2200	–	4 100 to 136 000	34000	4.5	540
–	90	4 300 to 143 000	36000	5	570
2400	–	4 800 to 162 000	40000	5.5	650

Flow characteristic values in SI units: DN 50 to 300 (2 to 12") for order code for "Design", option C "Fixed flange, without inlet/outlet runs"

Nominal diameter		Recommended flow	Factory settings		
		min./max. full scale value (v ~ 0.12/5 m/s)	Full scale value current output (v ~ 2.5 m/s)	Pulse value (~ 4 pulse/s)	Low flow cut off (v ~ 0.01 m/s)
[mm]	[in]	[m³/h]	[m³/h]	[m³]	[m³/h]
50	2	15 to 600 dm³/min	300 dm³/min	1.25 dm³	1.25 dm³/min
65	–	25 to 1 000 dm³/min	500 dm³/min	2 dm³	2 dm³/min
80	3	35 to 1 500 dm³/min	750 dm³/min	3 dm³	3.25 dm³/min
100	4	60 to 2 400 dm³/min	1 200 dm³/min	5 dm³	4.75 dm³/min
125	–	90 to 3 700 dm³/min	1 850 dm³/min	8 dm³	7.5 dm³/min
150	6	145 to 5 400 dm³/min	2 500 dm³/min	10 dm³	11 dm³/min
200	8	220 to 9 400 dm³/min	5 000 dm³/min	20 dm³	19 dm³/min
250	10	20 to 850	500	0.03	1.75
300	12	35 to 1 300	750	0.05	2.75

Flow characteristic values in US units: 1 to 48" (DN 25 to 1200)

Nominal diameter		Recommended flow	Factory settings		
		min./max. full scale value (v ~ 0.3/10 m/s)	Full scale value current output (v ~ 2.5 m/s)	Pulse value (~ 2 pulse/s)	Low flow cut off (v ~ 0.04 m/s)
[in]	[mm]	[gal/min]	[gal/min]	[gal]	[gal/min]
1	25	2.5 to 80	18	0.2	0.25
–	32	4 to 130	30	0.2	0.5
1 ½	40	7 to 185	50	0.5	0.75
2	50	10 to 300	75	0.5	1.25
–	65	16 to 500	130	1	2
3	80	24 to 800	200	2	2.5

Nominal diameter		Recommended flow	Factory settings		
		min./max. full scale value (v ~ 0.3/10 m/s)	Full scale value current output (v ~ 2.5 m/s)	Pulse value (~ 2 pulse/s)	Low flow cut off (v ~ 0.04 m/s)
[in]	[mm]	[gal/min]	[gal/min]	[gal]	[gal/min]
4	100	40 to 1250	300	2	4
–	125	60 to 1950	450	5	7
6	150	90 to 2650	600	5	12
8	200	155 to 4850	1200	10	15
10	250	250 to 7500	1500	15	30
12	300	350 to 10600	2400	25	45
14	350	500 to 15000	3600	30	60
15	375	600 to 19000	4800	50	60
16	400	600 to 19000	4800	50	60
18	450	800 to 24000	6000	50	90
20	500	1000 to 30000	7500	75	120
24	600	1400 to 44000	10500	100	180
28	700	1900 to 60000	13500	125	210
30	750	2150 to 67000	16500	150	270
32	800	2450 to 80000	19500	200	300
36	900	3100 to 100000	24000	225	360
40	1000	3800 to 125000	30000	250	480
42	–	4200 to 135000	33000	250	600
48	1200	5500 to 175000	42000	400	600

Flow characteristic values in US units: 54 to 90" (DN 1400 to 2400)

Nominal diameter		Recommended flow	Factory settings		
		min./max. full scale value (v ~ 0.3/10 m/s)	Full scale value current output (v ~ 2.5 m/s)	Pulse value (~ 2 pulse/s)	Low flow cut off (v ~ 0.04 m/s)
[in]	[mm]	[Mgal/d]	[Mgal/d]	[Mgal]	[Mgal/d]
54	–	9 to 300	75	0.0005	1.3
–	1400	10 to 340	85	0.0005	1.3
60	–	12 to 380	95	0.0005	1.3
–	1600	13 to 450	110	0.0008	1.7
66	–	14 to 500	120	0.0008	2.2
72	1800	16 to 570	140	0.0008	2.6
78	–	18 to 650	175	0.0010	3.0
–	2000	20 to 700	175	0.0010	2.9
84	–	24 to 800	190	0.0011	3.2
–	2200	26 to 870	210	0.0012	3.4
90	–	27 to 910	220	0.0013	3.6
–	2400	31 to 1030	245	0.0014	4.1

Flow characteristic values in US units: 2 to 12" (DN 50 to 300) for order code for "Design", option C "Fixed flange, without inlet/outlet runs"

Nominal diameter		Recommended flow	Factory settings		
		min./max. full scale value (v ~ 0.12/5 m/s)	Full scale value current output (v ~ 2.5 m/s)	Pulse value (~ 4 pulse/s)	Low flow cut off (v ~ 0.01 m/s)
[in]	[mm]	[gal/min]	[gal/min]	[gal]	[gal/min]
2	50	4 to 160	75	0.3	0.35
–	65	7 to 260	130	0.5	0.6
3	80	10 to 400	200	0.8	0.8
4	100	16 to 650	300	1.2	1.25
–	125	24 to 1 000	450	1.8	2
6	150	40 to 1 400	600	2.5	3
8	200	60 to 2 500	1 200	5	5
10	250	90 to 3 700	1 500	6	8
12	300	155 to 5 700	2 400	9	12

Recommended measuring range

Flow limit → 48

For custody transfer, the applicable approval determines the permitted measuring range, the pulse value and the low flow cut off.

Operable flow range

Over 1000 : 1

For custody transfer, the operable flow range is 100 : 1 to 630 : 1, depending on the nominal diameter. Further details are specified by the applicable approval.

Input signal

External measured values

Various pressure transmitters and temperature measuring devices can be ordered from Endress +Hauser: see "Accessories" section → 97

It is recommended to read in external measured values to calculate the following measured variables: Mass flow

HART protocol

The measured values are written from the automation system to the measuring device via the HART protocol. The pressure transmitter must support the following protocol-specific functions:
- HART protocol
- Burst mode

Digital communication

The measured values can be written from the automation system to the measuring via:
- PROFIBUS DP
- Modbus RS485
- EtherNet/IP

Status input

Maximum input values	▪ DC 30 V ▪ 6 mA
Response time	Adjustable: 5 to 200 ms

Input signal level	▪ Low signal: DC −3 to +5 V ▪ High signal: DC 12 to 30 V
Assignable functions	▪ Off ▪ Reset totalizers 1-3 separately ▪ Reset all totalizers ▪ Flow override

Output

Output signal

Current output

Current output	Can be set as: ▪ 4-20 mA NAMUR ▪ 4-20 mA US ▪ 4-20 mA HART ▪ 0-20 mA
Maximum output values	▪ DC 24 V (no flow) ▪ 22.5 mA
Load	0 to 700 Ω
Resolution	0.5 µA
Damping	Adjustable: 0.07 to 999 s
Assignable measured variables	▪ Volume flow ▪ Mass flow ▪ Flow velocity ▪ Conductivity ▪ Electronic temperature

Pulse/frequency/switch output

Function	▪ With the order code for "Output; Input", option **H**: output 2 can be set as a pulse or frequency output ▪ With the order code for "Output; Input", option **I**: output 2 and 3 can be set as a pulse, frequency or switch output ▪ With the order code for "Output; Input", option **J**: output 2 firmly assigned as certified pulse output
Version	Passive, open collector
Maximum input values	▪ DC 30 V ▪ 250 mA
Voltage drop	For 25 mA: ≤ DC 2 V
Pulse output	
Pulse width	Adjustable: 0.05 to 2 000 ms
Maximum pulse rate	10 000 Impulse/s
Pulse value	Adjustable
Assignable measured variables	▪ Volume flow ▪ Mass flow
Frequency output	
Output frequency	Adjustable: 0 to 12 500 Hz
Damping	Adjustable: 0 to 999 s
Pulse/pause ratio	1:1

Assignable measured variables	▪ Volume flow ▪ Mass flow ▪ Conductivity ▪ Flow velocity ▪ Electronic temperature
Switch output	
Switching behavior	Binary, conductive or non-conductive
Switching delay	Adjustable: 0 to 100 s
Number of switching cycles	Unlimited

Assignable functions	▪ Off
	▪ On
	▪ Diagnostic behavior
	▪ Limit value:
	  ▪ Off
	  ▪ Volume flow
	  ▪ Mass flow
	  ▪ Conductivity
	  ▪ Flow velocity
	  ▪ Totalizer 1-3
	  ▪ Electronic temperature
	▪ Flow direction monitoring
	▪ Status
	  ▪ Empty pipe detection
	  ▪ Low flow cut off

PROFIBUS DP

Signal encoding	NRZ code
Data transfer	9.6 kBaud...12 MBaud

Modbus RS485

Physical interface	In accordance with EIA/TIA-485-A standard
Terminating resistor	Integrated, can be activated via DIP switch on the transmitter electronics module

EtherNet/IP

Standards	In accordance with IEEE 802.3

Signal on alarm

Depending on the interface, failure information is displayed as follows:

Current output 4 to 20 mA

4 to 20 mA

Failure mode	Choose from: ▪ 4 to 20 mA in accordance with NAMUR recommendation NE 43 ▪ 4 to 20 mA in accordance with US ▪ Min. value: 3.59 mA ▪ Max. value: 22.5 mA ▪ Freely definable value between: 3.59 to 22.5 mA ▪ Actual value ▪ Last valid value

0 to 20 mA

Failure mode	Choose from: ▪ Maximum alarm: 22 mA ▪ Freely definable value between: 0 to 22.5 mA

HART current output

Device diagnostics	Device condition can be read out via HART Command 48

Pulse/frequency/switch output

Pulse output	
Failure mode	Choose from: ▪ Actual value ▪ No pulses
Frequency output	
Failure mode	Choose from: ▪ Actual value ▪ 0 Hz ▪ Defined value: 0 to 12 500 Hz
Switch output	
Failure mode	Choose from: ▪ Current status ▪ Open ▪ Closed

PROFIBUS DP

Status and alarm messages	Diagnostics in accordance with PROFIBUS PA Profile 3.02

Modbus RS485

Failure mode	Choose from: ▪ NaN value instead of current value ▪ Last valid value

EtherNet/IP

Device diagnostics	Device condition can be read out in Input Assembly

Local display

Plain text display	With information on cause and remedial measures
Backlight	Red backlighting indicates a device error.

Status signal as per NAMUR recommendation NE 107

Interface/protocol

- Via digital communication:
  - HART protocol
  - PROFIBUS DP
  - Modbus RS485
  - EtherNet/IP
- Via service interface
  - CDI-RJ45 service interface
  - WLAN interface

Plain text display	With information on cause and remedial measures

Additional information on remote operation → 📄 87

Web browser

Plain text display	With information on cause and remedial measures

Light emitting diodes (LED)

Status information	Status indicated by various light emitting diodes The following information is displayed depending on the device version: ▪ Supply voltage active ▪ Data transmission active ▪ Device alarm/error has occurred ▪ EtherNet/IP network available ▪ EtherNet/IP connection established

Low flow cut off

The switch points for low flow cut off are user-selectable.

Galvanic isolation

The following connections are galvanically isolated from each other:
- Inputs
- Outputs
- Power supply

Protocol-specific data

HART

Manufacturer ID	0x11
Device type ID	0x69
HART protocol revision	7
Device description files (DTM, DD)	Information and files under: www.endress.com
HART load	Min. 250 Ω

Dynamic variables	Read out the dynamic variables: HART command 3 The measured variables can be freely assigned to the dynamic variables. **Measured variables for PV (primary dynamic variable)** ▪ Off ▪ Volume flow ▪ Mass flow ▪ Conductivity ▪ Flow velocity ▪ Electronic temperature **Measured variables for SV, TV, QV (secondary, tertiary and quaternary dynamic variable)** ▪ Volume flow ▪ Mass flow ▪ Conductivity ▪ Flow velocity ▪ Electronic temperature ▪ Totalizer 1 ▪ Totalizer 2 ▪ Totalizer 3
Device variables	Read out the device variables: HART command 9 The device variables are permanently assigned. A maximum of 8 device variables can be transmitted: ▪ 0 = volume flow ▪ 1 = mass flow ▪ 2 = conductivity ▪ 3 = flow velocity ▪ 4 = electronic temperature ▪ 5 = totalizer 1 ▪ 6 = totalizer 2 ▪ 7 = totalizer 3

PROFIBUS DP

Manufacturer ID	0x11
Ident number	0x1562
Profile version	3.02
Device description files (GSD, DTM, DD)	Information and files under: ▪ www.endress.com ▪ www.profibus.org
Output values (from measuring device to automation system)	**Analog input 1 to 4** ▪ Mass flow ▪ Volume flow ▪ Flow velocity ▪ Conductivity ▪ Electronic temperature **Digital input 1 to 2** ▪ Empty pipe detection ▪ Low flow cut off ▪ Verification status **Totalizer 1 to 3** ▪ Mass flow ▪ Volume flow

Input values
(from automation system to measuring device)
	Analog output 1 (fixed assignment)
	External density
	Digital output 1 to 2 (fixed assignment)
	▪ Digital output 1: switch positive zero return on/off
	▪ Digital output 2: start verification
	Totalizer 1 to 3
	▪ Totalize
	▪ Reset and hold
	▪ Preset and hold
	▪ Stop
	▪ Operating mode configuration:
	  ▪ Net flow total
	  ▪ Forward flow total
	  ▪ Reverse flow total

Supported functions	▪ Identification & Maintenance Simplest device identification on the part of the control system and nameplate ▪ PROFIBUS upload/download Reading and writing parameters is up to ten times faster with PROFIBUS upload/download ▪ Condensed status Simplest and self-explanatory diagnostic information by categorizing diagnostic messages that occur
Configuration of the device address	▪ DIP switches on the I/O electronics module ▪ Via operating tools (e.g. FieldCare)

Modbus RS485

Protocol	Modbus Applications Protocol Specification V1.1
Device type	Slave
Slave address range	1 to 247
Broadcast address range	0
Function codes	▪ 03: Read holding register ▪ 04: Read input register ▪ 06: Write single registers ▪ 08: Diagnostics ▪ 16: Write multiple registers ▪ 23: Read/write multiple registers
Broadcast messages	Supported by the following function codes: ▪ 06: Write single registers ▪ 16: Write multiple registers ▪ 23: Read/write multiple registers
Supported baud rate	▪ 1 200 BAUD ▪ 2 400 BAUD ▪ 4 800 BAUD ▪ 9 600 BAUD ▪ 19 200 BAUD ▪ 38 400 BAUD ▪ 57 600 BAUD ▪ 115 200 BAUD
Data transfer mode	▪ ASCII ▪ RTU
Data access	Each device parameter can be accessed via Modbus RS485. For detailed information on "Modbus RS485 register information", see the Description of Device Parameters → 🖹 98

EtherNet/IP

Protocol	▪ The CIP Networks Library Volume 1: Common Industrial Protocol ▪ The CIP Networks Library Volume 2: EtherNet/IP Adaptation of CIP		
Communication type	▪ 10Base-T ▪ 100Base-TX		
Device profile	Generic device (product type: 0x2B)		
Manufacturer ID	0x49E		
Device type ID	0x1067		
Baud rates	Automatic $^{10}/_{100}$ Mbit with half-duplex and full-duplex detection		
Polarity	Auto-polarity for automatic correction of crossed TxD and RxD pairs		
Supported CIP connections	Max. 3 connections		
Explicit connections	Max. 6 connections		
I/O connections	Max. 6 connections (scanner)		
Configuration options for measuring device	▪ DIP switches on the electronics module for IP addressing ▪ Manufacturer-specific software (FieldCare) ▪ Custom Add-on Profile for Rockwell Automation control systems ▪ Web browser ▪ Electronic Data Sheet (EDS) integrated in the measuring device		
Configuration of the EtherNet interface	▪ Speed: 10 MBit, 100 MBit, auto (factory setting) ▪ Duplex: half-duplex, full-duplex, auto (factory setting)		
Configuration of the device address	▪ DIP switches on the electronics module for IP addressing (last octet) ▪ DHCP ▪ Manufacturer-specific software (FieldCare) ▪ Custom Add-on Profile for Rockwell Automation control systems ▪ Web browser ▪ EtherNet/IP tools, e.g. RSLinx (Rockwell Automation)		
Device Level Ring (DLR)	No		
Fix Input			
RPI	5 ms to 10 s (factory setting: 20 ms)		
Exclusive Owner Multicast		Instance	Size [byte]
	Instance configuration:	0x68	398
	O → T configuration:	0x66	56
	T → O configuration:	0x64	32
Exclusive Owner Multicast		Instance	Size [byte]
	Instance configuration:	0x69	-
	O → T configuration:	0x66	56
	T → O configuration:	0x64	32
Input only Multicast		Instance	Size [byte]
	Instance configuration:	0x68	398
	O → T configuration:	0xC7	-
	T → O configuration:	0x64	32
Input only Multicast		Instance	Size [byte]
	Instance configuration:	0x69	-
	O → T configuration:	0xC7	-
	T → O configuration:	0x64	32

Input Assembly	▪ Current device diagnostics ▪ Volume flow ▪ Mass flow ▪ Conductivity ▪ Totalizer 1 ▪ Totalizer 2 ▪ Totalizer 3		
Configurable Input			
RPI	5 ms to 10 s (factory setting: 20 ms)		
Exclusive Owner Multicast		Instance	Size [byte]
	Instance configuration:	0x68	398
	O → T configuration:	0x66	56
	T → O configuration:	0x65	88
Exclusive Owner Multicast		Instance	Size [byte]
	Instance configuration:	0x69	-
	O → T configuration:	0x66	56
	T → O configuration:	0x65	88
Input only Multicast		Instance	Size [byte]
	Instance configuration:	0x68	398
	O → T configuration:	0xC7	-
	T → O configuration:	0x65	88
Input only Multicast		Instance	Size [byte]
	Instance configuration:	0x69	-
	O → T configuration:	0xC7	-
	T → O configuration:	0x65	88
Configurable Input Assembly	▪ Volume flow ▪ Mass flow ▪ Electronic temperature ▪ Conductivity ▪ Totalizer 1 to 3 ▪ Flow velocity ▪ Volume flow unit ▪ Mass flow unit ▪ Temperature unit ▪ Conductivity unit ▪ Unit totalizer 1-3 ▪ Flow velocity unit ▪ Verification result ▪ Verification status The range of options increases if the measuring device has one or more application packages.		
Fix Output			
Output Assembly	▪ Activation of reset totalizers 1-3 ▪ Activation of reference density compensation ▪ Reset totalizers 1-3 ▪ External density ▪ Density unit ▪ Activation verification ▪ Start verification		

Configuration	

Configuration Assembly	Only the most common configurations are listed below.
	▪ Software write protection
	▪ Mass flow unit
	▪ Mass unit
	▪ Volume flow unit
	▪ Volume unit
	▪ Density unit
	▪ Conductivity
	▪ Temperature unit
	▪ Totalizer 1-3:
	  ▪ Assignment
	  ▪ Unit
	  ▪ Operating mode
	  ▪ Failure mode
	▪ Alarm delay

Power supply

Terminal assignment

Transmitter: 0-20 mA/4-20 mA HART

The sensor can be ordered with terminals.

Connection methods available		Possible options for order code "Electrical connection"
Outputs	Power supply	
Terminals	Terminals	▪ Option **A**: coupling M20x1 ▪ Option **B**: thread M20x1 ▪ Option **C**: thread G ½" ▪ Option **D**: thread NPT ½"

Supply voltage

Order code "Power supply"	Terminal numbers	terminal voltage		Frequency range
Option **L** (wide range power unit)	1 (L+/L), 2 (L-/N)	DC 24 V	±25%	–
		AC 24 V	±25%	50/60 Hz, ±4 Hz
		AC 100 to 240 V	−15 to +10%	50/60 Hz, ±4 Hz

Signal transmission 0-20 mA/4-20 mA HART and additional outputs and inputs

Order code for "Output" and "Input"	Terminal numbers							
	Output 1		Output 2		Output 3		Input	
	26 (+)	27 (-)	24 (+)	25 (-)	22 (+)	23 (-)	20 (+)	21 (-)
Option **H**	▪ 4-20 mA HART (active) ▪ 0-20 mA (active)		Pulse/frequency output (passive)		Switch output (passive)		-	
Option **I**	▪ 4-20 mA HART (active) ▪ 0-20 mA (active)		Pulse/frequency/ switch output (passive)		Pulse/frequency/ switch output (passive)		Status input	
Option **J**	▪ 4-20 mA HART (active) ▪ 0-20 mA (active)		Permanently assigned: Pulse output adjusted (passive)		Pulse/frequency/ switch output (passive)		Status input	

Transmitter: PROFIBUS DP

The sensor can be ordered with terminals.

Connection methods available		Possible options for order code "Electrical connection"
Outputs	**Power supply**	
Terminals	Terminals	▪ Option **A**: coupling M20x1 ▪ Option **B**: thread M20x1 ▪ Option **C**: thread G ½" ▪ Option **D**: thread NPT ½"

Supply voltage

Order code "Power supply"	Terminal numbers	terminal voltage		Frequency range
Option **L** (wide range power unit)	1 (L+/L), 2 (L-/N)	DC 24 V	±25%	–
		AC 24 V	±25%	50/60 Hz, ±4 Hz
		AC 100 to 240 V	−15 to +10%	50/60 Hz, ±4 Hz

PROFIBUS DP signal transmission

Order code for "Output" and "Input"	Terminal numbers	
	26 (RxD/TxD-P)	**27 (RxD/TxD-N)**
Option **L**	B	A
Order code for "Output": Option L: PROFIBUS DP, for use in non-hazardous areas and Zone 2/div. 2		

Transmitter: Modbus RS485

The sensor can be ordered with terminals.

Connection methods available		Possible options for order code "Electrical connection"
Outputs	**Power supply**	
Terminals	Terminals	▪ Option **A**: coupling M20x1 ▪ Option **B**: thread M20x1 ▪ Option **C**: thread G ½" ▪ Option **D**: thread NPT ½"

Supply voltage

Order code "Power supply"	Terminal numbers	terminal voltage		Frequency range
Option **L** (wide range power unit)	1 (L+/L), 2 (L-/N)	DC 24 V	±25%	–
		AC 24 V	±25%	50/60 Hz, ±4 Hz
		AC 100 to 240 V	−15 to +10%	50/60 Hz, ±4 Hz

Signal transmission Modbus RS485

Order code for "Output" and "Input"	Terminal numbers	
	26 (+)	**27 (-)**
Option **M**	B	A

Transmitter: EtherNet/IP

The transmitter can be ordered with terminals or a device plug.

Connection methods available		Possible options for order code "Electrical connection"
Outputs	**Power supply**	
EtherNet/IP (RJ45 connector)	Terminals	Option **D**: thread NPT ½"
Device plug → 🖹 23	Terminals	▪ Option **L**: plug M12x1 + thread NPT ½" ▪ Option **N**: plug M12x1 + coupling M20 ▪ Option **P**: plug M12x1 + thread G ½" ▪ Option **U**: plug M12x1 + thread M20

Supply voltage

Order code "Power supply"	Terminal numbers	terminal voltage		Frequency range
Option **L** (wide range power unit)	1 (L+/L), 2 (L-/N)	DC 24 V	±25%	–
		AC 24 V	±25%	50/60 Hz, ±4 Hz
		AC 100 to 240 V	−15 to +10%	50/60 Hz, ±4 Hz

EtherNet/IP signal transmission

Order code for "Output"	Connection via
Option **N**	EtherNet/IP: RJ45 or M12 connector

Remote version

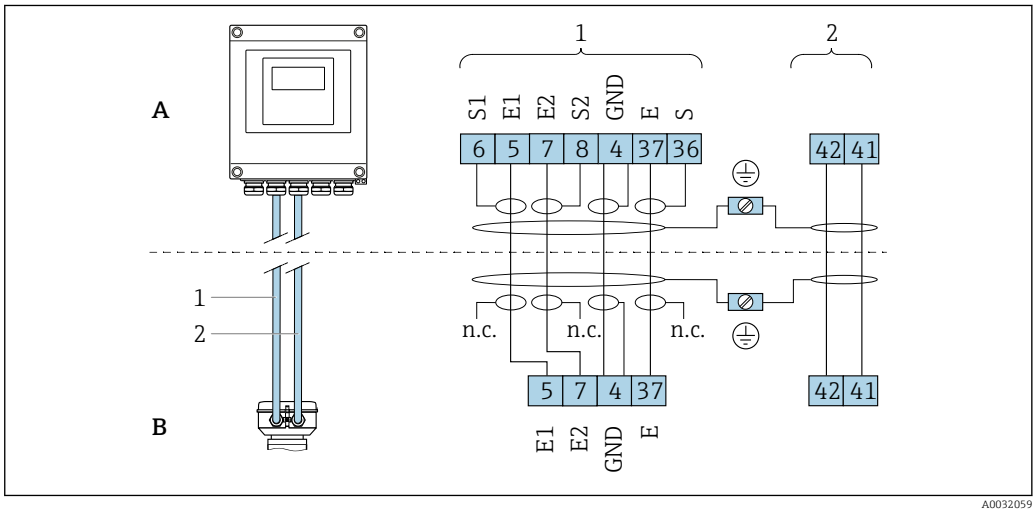

🖹 2 *Remote version terminal assignment*

A Transmitter wall-mount housing
B Sensor connection housing
1 Electrode cable
2 Coil current cable
n.c. Not connected, insulated cable shields

Terminal No. and cable colors: 6/5 = brown; 7/8 = white; 4 = green; 36/37 = yellow

Pin assignment, device plug

Order codes for the M12x1 connectors, see the "Order code for electrical connection" column: EtherNet/IP → 🖹 23

EtherNet/IP

Device plug for signal transmission (device side)

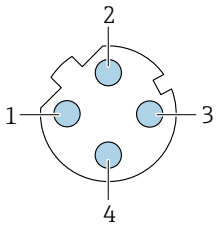

Pin	Assignment		Coding	Plug/socket
1	+	Tx	D	Socket
2	+	Rx		
3	-	Tx		
4	-	Rx		

Recommended plug:
- Binder, series 763, part no. 99 3729 810 04
- Phoenix, part no. 1543223 SACC-M12MSD-4Q
- The device plug is not permitted in the hazardous area, Class I Division 2. The device plug may only be used in the non-hazardous area (General Purpose).

Supply voltage

Transmitter

Order code for "Power supply"	terminal voltage		Frequency range
Option **L**	DC 24 V	±25%	–
	AC 24 V	±25%	50/60 Hz, ±4 Hz
	AC 100 to 240 V	−15 to +10%	50/60 Hz, ±4 Hz

Power consumption

Order code for "Output"	Maximum power consumption
Option **H**: 4-20mA HART, pulse/frequency/switch output, switch output	30 VA/8 W
Option **I**: 4-20mA HART, 2 x pulse/frequency/switch output, status input	30 VA/8 W
Option **J**: 4-20mA HART, certified pulse output, pulse/frequency/switch output, status input	30 VA/8 W
Option **L**: PROFIBUS DP	30 VA/8 W
Option **M**: Modbus RS485	30 VA/8 W
Option **N**: EtherNet/IP	30 VA/8 W

Current consumption

Transmitter

Order code for "Power supply"	Maximum Current consumption	Maximum switch-on current
Option **L**: AC 100 to 240 V	145 mA	25 A (< 5 ms)
Option **L**: AC/DC 24 V	350 mA	27 A (< 5 ms)

Power supply failure

- Totalizers stop at the last value measured.
- Depending on the device version, the configuration is retained in the device memoryor in the pluggable data memory (HistoROM DAT).
- Error messages (incl. total operated hours) are stored.

Electrical connection

Connecting the transmitter

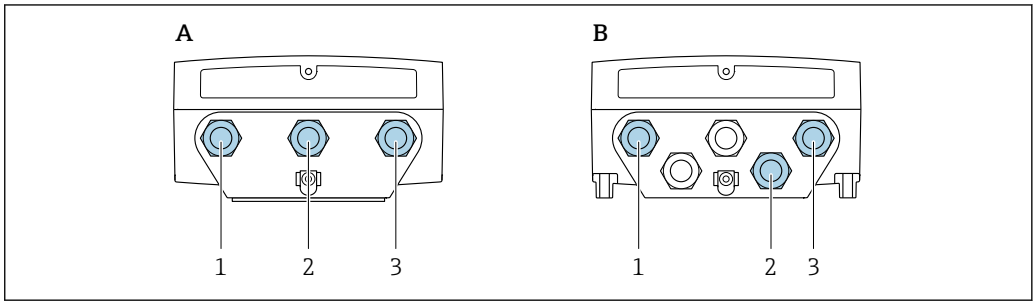

3 *Supply voltage and signal transmission connection*

A Compact version
B Remote version wall-mount housing
1 Cable entry for supply voltage
2 Cable entry for signal transmission
3 Cable entry for signal transmission

Remote version connection

Connecting cable

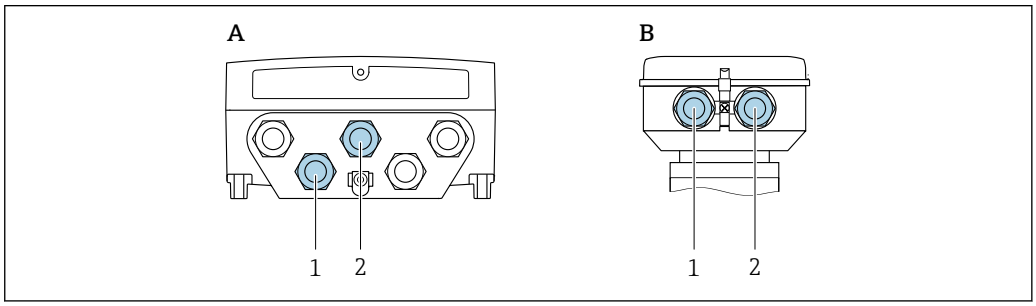

4 *Connecting cable connection: electrode and coil current cable*

A Transmitter wall-mount housing
B Sensor connection housing
1 Electrode cable
2 Coil current cable

- Fix the cable run or route it in an armored conduit.
  Cable movements can influence the measuring signal especially in the case of low fluid conductivities.
- Route the cable well clear of electrical machines and switching elements.
- Ensure potential equalization between sensor and transmitter .

Connection examples

Current output 4 to 20 mA HART

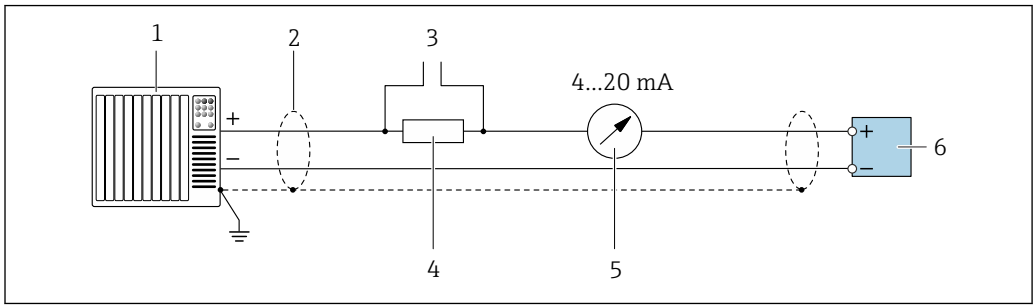

5 Connection example for 4 to 20 mA HART current output (active)

1 *Automation system with current input (e.g. PLC)*
2 *Cable shield provided at one end. The cable shield must be grounded at both ends to comply with EMC requirements; observe cable specifications → 31*
3 *Connection for HART operating devices → 87*
4 *Resistor for HART communication (≥ 250 Ω): observe maximum load → 13*
5 *Analog display unit: observe maximum load → 13*
6 *Transmitter*

Current output 4-20 mA

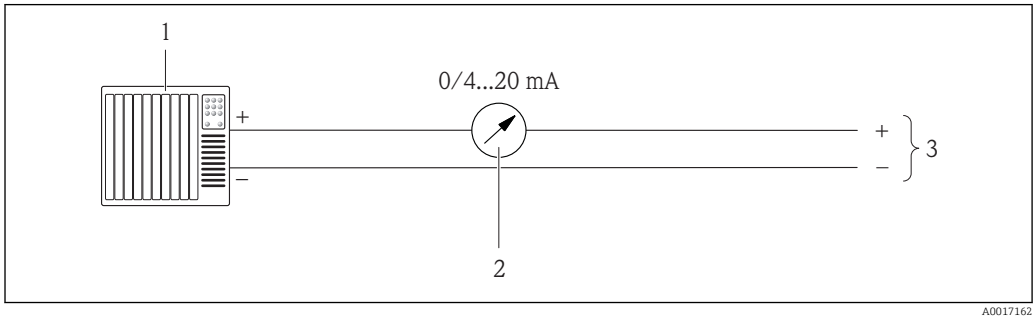

6 Connection example for 0-20 mA current output (active) and 4-20 mA current output (active)

1 *Automation system with current input (e.g. PLC)*
2 *Analog display unit: observe maximum load*
3 *Transmitter*

Pulse/frequency output

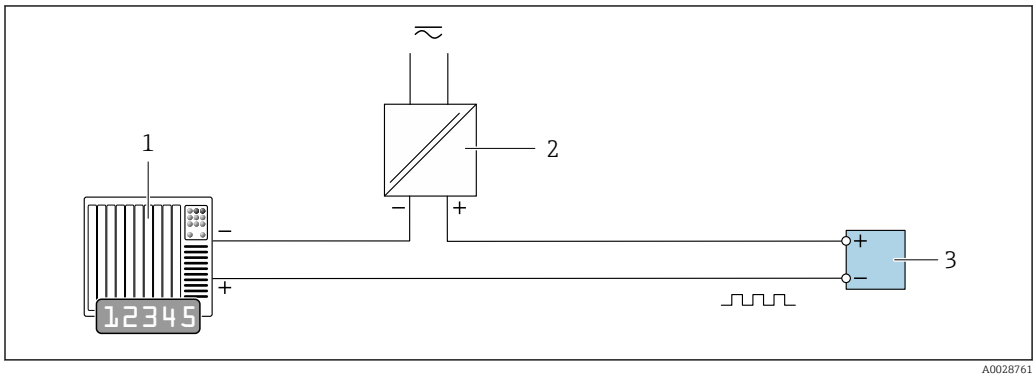

7 Connection example for pulse/frequency output (passive)

1 *Automation system with pulse/frequency input (e.g. PLC)*
2 *Power supply*
3 *Transmitter: Observe input values → 13*

Switch output

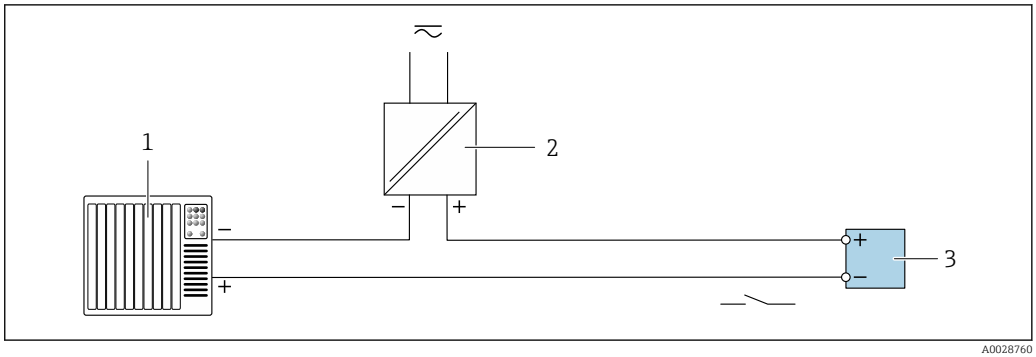

8 Connection example for switch output (passive)

1 Automation system with switch input (e.g. PLC)
2 Power supply
3 Transmitter: Observe input values → 13

PROFIBUS DP

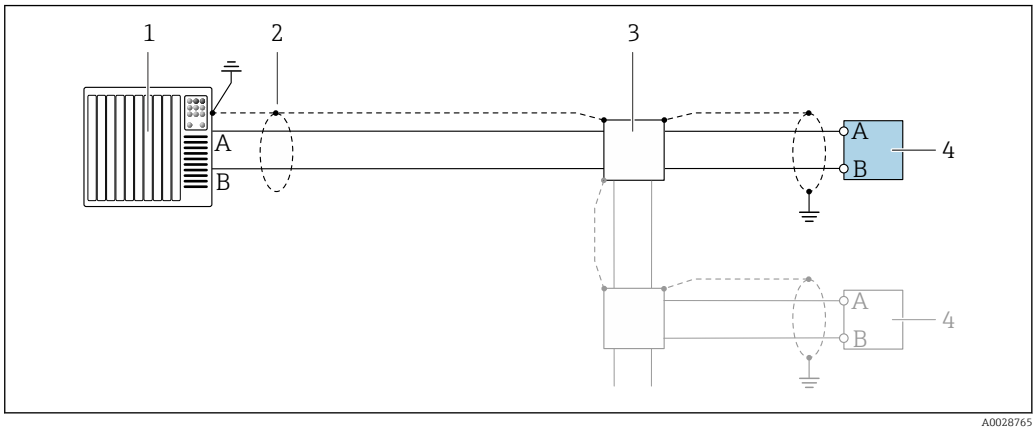

9 Connection example for PROFIBUS DP, non-hazardous area and Zone 2/Div. 2

1 Control system (e.g. PLC)
2 Cable shield provided at one end. The cable shield must be grounded at both ends to comply with EMC requirements; observe cable specifications
3 Distribution box
4 Transmitter

If baud rates > 1.5 MBaud an EMC cable entry must be used and the cable shield must continue as far as the terminal wherever possible.

Modbus RS485

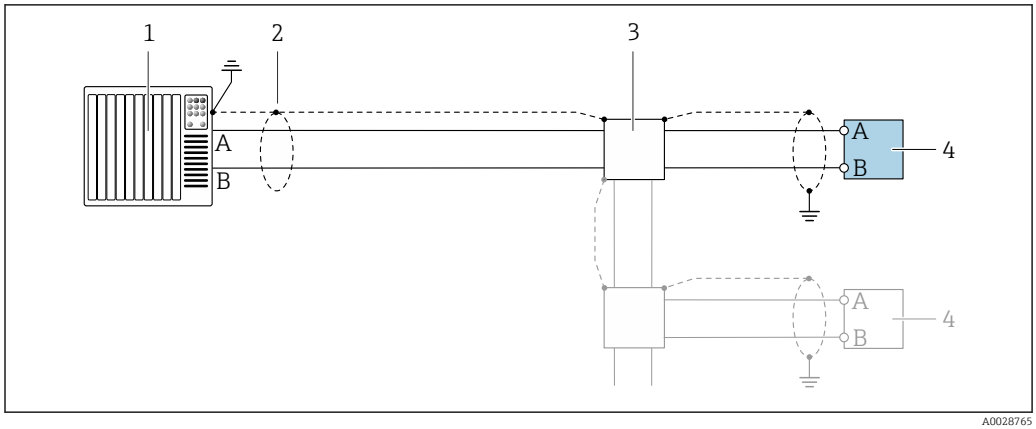

10 Connection example for Modbus RS485, non-hazardous area and Zone 2/Div. 2

1 *Control system (e.g. PLC)*
2 *Cable shield provided at one end. The cable shield must be grounded at both ends to comply with EMC requirements; observe cable specifications*
3 *Distribution box*
4 *Transmitter*

EtherNet/IP

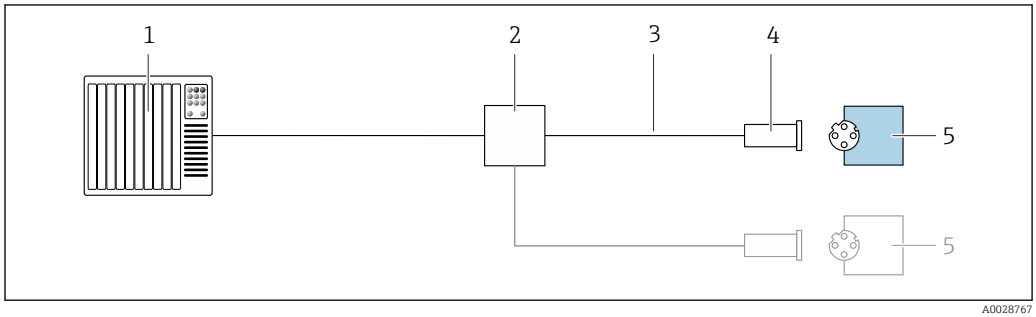

11 Connection example for EtherNet/IP

1 *Control system (e.g. PLC)*
2 *Ethernet switch*
3 *Observe cable specifications*
4 *Device plug*
5 *Transmitter*

Status input

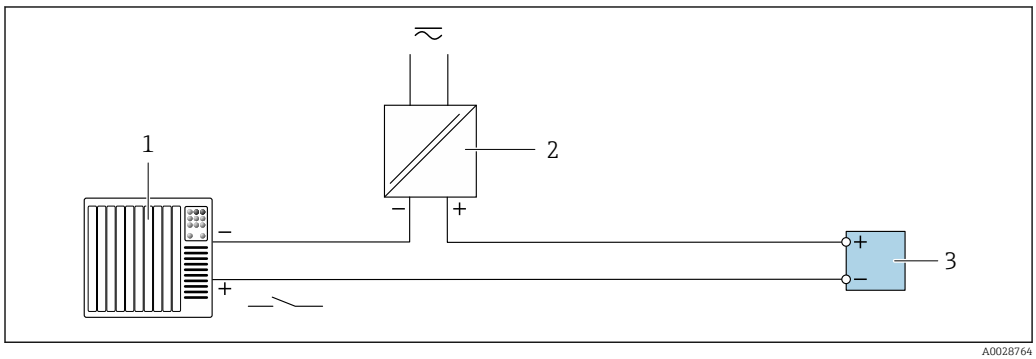

12 Connection example for status input

1 *Automation system with status output (e.g. PLC)*
2 *Power supply*
3 *Transmitter*

Potential equalization

Requirements

Please consider the following to ensure correct measurement:
- Same electrical potential for the fluid and sensor
- Remote version: same electrical potential for the sensor and transmitter
- Company-internal grounding concepts
- Pipe material and grounding

Connection example, standard scenario

Metal, grounded pipe

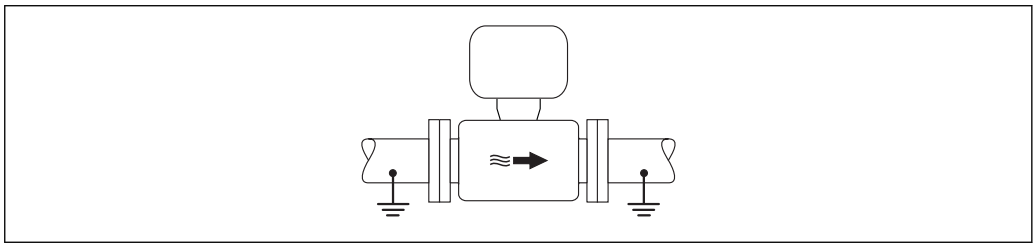

A0016315

13 *Potential equalization via measuring tube*

Connection example in special situations

Unlined and ungrounded metal pipe

This connection method also applies in situations where:
- The customary potential equalization is not used
- Equalizing currents are present

Ground cable	Copper wire, at least 6 mm² (0.0093 in²)

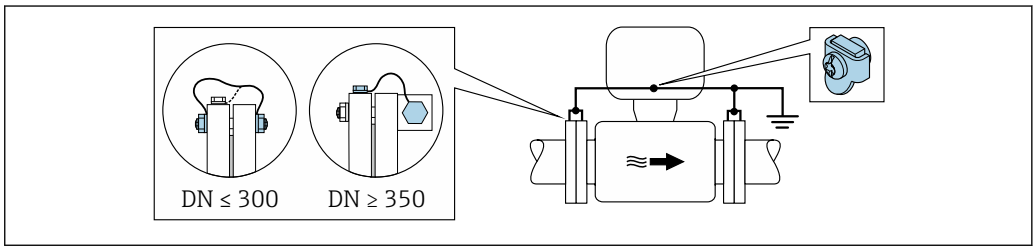

A0029338

14 *Potential equalization via ground terminal and pipe flanges*

Note the following when installing:
- Connect both sensor flanges to the pipe flange via a ground cable and ground them.
- Connect the connection housing of the transmitter or sensor to ground potential by means of the ground terminal provided for the purpose. To mount the ground cable:
  - If DN ≤ 300 (12"): Mount the ground cable directly on the conductive flange coating of the sensor with the flange screws.
  - If DN ≥ 350 (14"): Mount the ground cable directly on the metal transport bracket.

For remote device versions, the ground terminal in the example always refers to the sensor and **not** to the transmitter.

You can order the necessary ground cable from Endress+Hauser: .

Plastic pipe or pipe with insulating liner

This connection method also applies in situations where:
- The customary potential equalization is not used
- Equalizing currents are present

Ground cable	Copper wire, at least 6 mm² (0.0093 in²)

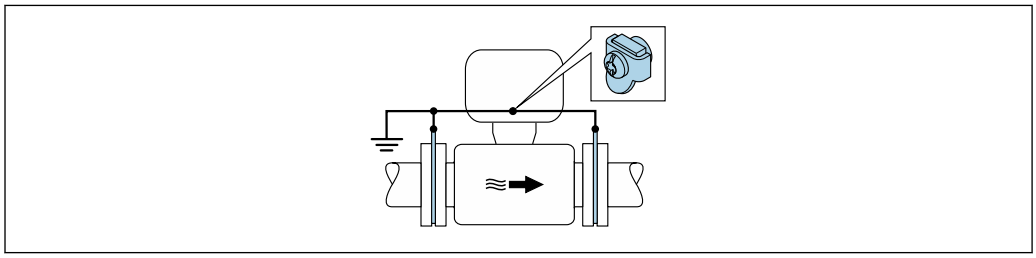

A0029339

15 Potential equalization via ground terminal and ground disks

Note the following when installing:
The ground disks must be connected to the ground terminal via the ground cable and be connected to ground potential.

For remote device versions, the ground terminal in the example always refers to the sensor and **not** to the transmitter.

The ground cable and ground disks can be ordered from Endress+Hauser → 96.

Pipe with a cathodic protection unit

This connection method is only used if the following two conditions are met:
- Metal pipe without liner or pipe with electrically conductive liner
- Cathodic protection is integrated in the personal protection equipment

Ground cable	Copper wire, at least 6 mm² (0.0093 in²)

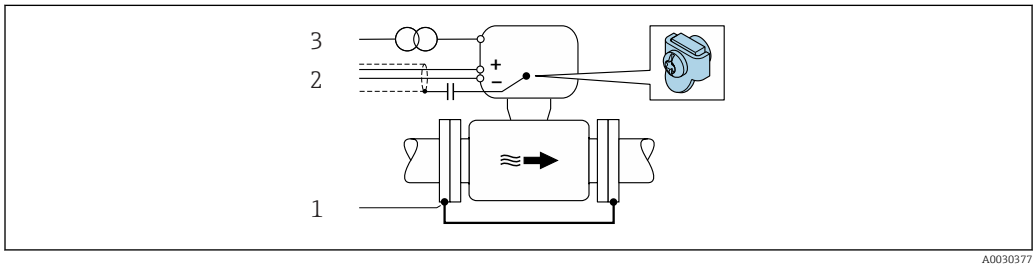

A0030377

1 *Connection of the two flanges of the pipe via a ground cable*
2 *Signal line shielding via a capacitor*
3 *Measuring device connected to power supply such that it is floating in relation to the protective ground (isolation transformer)*

Note the following when installing:
The sensor is installed in the pipe in a way that provides electrical insulation.

For remote device versions, the ground terminal in the example always refers to the sensor and **not** to the transmitter.

You can order the necessary ground cable from Endress+Hauser: .

terminals

Transmitter
- Supply voltage cable: plug-in spring terminals for wire cross-sections 0.5 to 2.5 mm² (20 to 14 AWG)
- Signal cable: plug-in spring terminals for wire cross-sections 0.5 to 2.5 mm² (20 to 14 AWG)
- Electrode cable: spring terminals for wire cross-sections 0.5 to 2.5 mm² (20 to 14 AWG)
- Coil current cable: spring terminals for wire cross-sections 0.5 to 2.5 mm² (20 to 14 AWG)

Sensor connection housing
Spring terminals for wire cross-sections0.5 to 2.5 mm² (20 to 14 AWG)

Cable entries

Cable entry thread
- M20 x 1.5
- Via adapter:
  - NPT ½"
  - G ½"

Cable gland
- For standard cable: M20 × 1.5 with cable ϕ6 to 12 mm (0.24 to 0.47 in)
- For reinforced cable: M20 × 1.5 with cable ϕ9.5 to 16 mm (0.37 to 0.63 in)

If metal cable entries are used, use a grounding plate.

Cable specification

Permitted temperature range
- The installation guidelines that apply in the country of installation must be observed.
- The cables must be suitable for the minimum and maximum temperatures to be expected.

Power supply cable

Standard installation cable is sufficient.

Signal cable

Current output 0/4 to 20 mA

Standard installation cable is sufficient.

Current output 4 to 20 mA HART

A shielded cable is recommended. Observe grounding concept of the plant.

Pulse/frequency/switch output

Standard installation cable is sufficient.

Status input

Standard installation cable is sufficient.

PROFIBUS DP

The IEC 61158 standard specifies two types of cable (A and B) for the bus line which can be used for every transmission rate. Cable type A is recommended.

Cable type	A
Characteristic impedance	135 to 165 Ω at a measuring frequency of 3 to 20 MHz
Cable capacitance	< 30 pF/m
Wire cross-section	> 0.34 mm² (22 AWG)
Cable type	Twisted pairs
Loop resistance	≤110 Ω/km
Signal damping	Max. 9 dB over the entire length of the cable cross-section
Shield	Copper braided shielding or braided shielding with foil shield. When grounding the cable shield, observe the grounding concept of the plant.

For further information on planning and installing PROFIBUS networks see:

Operating Instructions "PROFIBUS DP/PA: Guidelines for planning and commissioning" (BA00034S)

Modbus RS485

The EIA/TIA-485 standard specifies two types of cable (A and B) for the bus line which can be used for every transmission rate. Cable type A is recommended.

Cable type	A
Characteristic impedance	135 to 165 Ω at a measuring frequency of 3 to 20 MHz
Cable capacitance	< 30 pF/m
Wire cross-section	> 0.34 mm² (22 AWG)
Cable type	Twisted pairs
Loop resistance	≤110 Ω/km
Signal damping	Max. 9 dB over the entire length of the cable cross-section
Shield	Copper braided shielding or braided shielding with foil shield. When grounding the cable shield, observe the grounding concept of the plant.

EtherNet/IP

The standard ANSI/TIA/EIA-568-B.2 Annex specifies CAT 5 as the minimum category for a cable used for EtherNet/IP. CAT 5e and CAT 6 are recommended.

For more information on planning and installing EtherNet/IP networks, please refer to the "Media Planning and Installation Manual. EtherNet/IP" of ODVA Organization

Connecting cable for remote version

Electrode cable

Standard cable	3 ×0.38 mm² (20 AWG) with common, braided copper shield (ϕ ~9.5 mm (0.37 in)) and individual shielded cores
Cable for empty pipe detection (EPD)	4 ×0.38 mm² (20 AWG) with common, braided copper shield (ϕ ~9.5 mm (0.37 in)) and individual shielded cores
Conductor resistance	≤50 Ω/km (0.015 Ω/ft)
Capacitance: core/shield	≤420 pF/m (128 pF/ft)
Operating temperature	–20 to +80 °C (–4 to +176 °F)

Coil current cable

Standard cable	3 ×0.75 mm² (18 AWG) with common, braided copper shield (ϕ ~9 mm (0.35 in))
Conductor resistance	≤37 Ω/km (0.011 Ω/ft)
Capacitance: core/core, shield grounded	≤120 pF/m (37 pF/ft)
Operating temperature	–20 to +80 °C (–4 to +176 °F)
Test voltage for cable insulation	≤ AC 1433 V r.m.s. 50/60 Hz or ≥ DC 2026 V

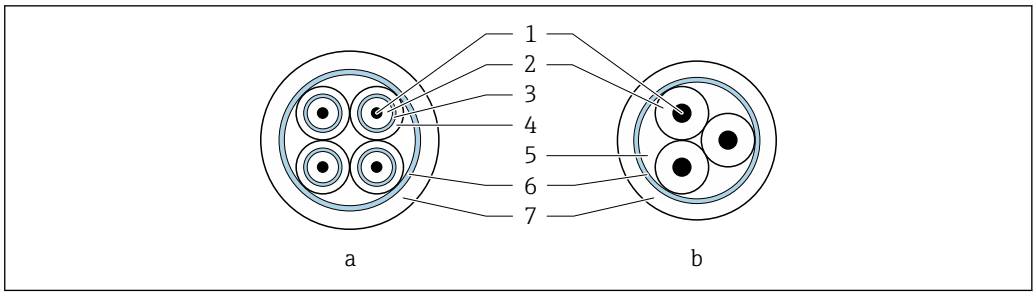

16 *Cable cross-section*

a *Electrode cable*
b *Coil current cable*
1 *Core*
2 *Core insulation*
3 *Core shield*
4 *Core jacket*
5 *Core reinforcement*
6 *Cable shield*
7 *Outer jacket*

A connecting cable can be ordered from Endress+Hauser for IP68:
- Pre-terminated cables that are already connected to the sensor.
- Pre-terminated cables, where the cables are connected by the customer onsite (incl. tools for sealing the connection compartment)

Reinforced connecting cables

Reinforced connecting cables with an additional, reinforcing metal braid should be used:
- When laying the cable directly in the ground
- Where there is a risk of damage from rodents
- If using the device below IP68 degree of protection

Reinforced connecting cables with an additional, reinforcing metal braid can be ordered from Endress+Hauser .

Operation in areas with strong electrical interference

The measuring system meets the general safety requirements → 93 and EMC specifications → 43.

Grounding is by means of the ground terminal provided for the purpose inside the connection housing. The stripped and twisted lengths of cable shield to the ground terminal must be as short as possible.

Performance characteristics

Reference operating conditions

- Error limits following DIN EN 29104, in future ISO 20456
- Water, typically +15 to +45 °C (+59 to +113 °F); 0.5 to 7 bar (73 to 101 psi)
- Data as indicated in the calibration protocol
- Accuracy based on accredited calibration rigs according to ISO 17025

Maximum measured error

Error limits under reference operating conditions

Volume flow

- ±0.5 % o.r. ± 1 mm/s (0.04 in/s)
- Optional: ±0.2 % o.r. ± 2 mm/s (0.08 in/s)

Order code for "Design"	Installation *with* inlet and outlet runs max. measured error 0.5 %	Installation *with* inlet and outlet runs max. measured error 0.2 %	Installation *without* inlet and outlet runs max. measured error 0.5 %
Options A, B, D, E, F, G (standard)	☑	☑	not recommended
Options C, H, I (0 x DN)	☑	☑	☑

Fluctuations in the supply voltage do not have any effect within the specified range.

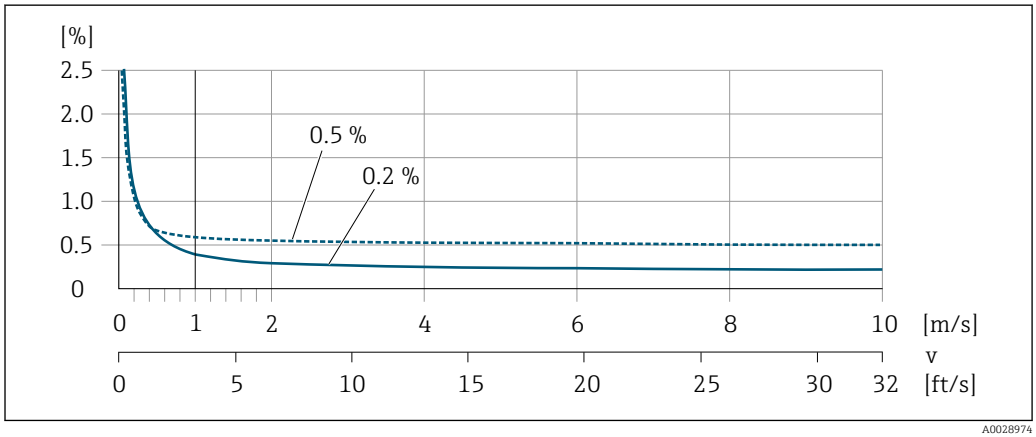

17 *Maximum measured error in % o.r.*

Flat Spec

For Flat Spec in the range $v_{0.5}$ ($v_{0.2}$) up to v_{max} the measured error is constant.

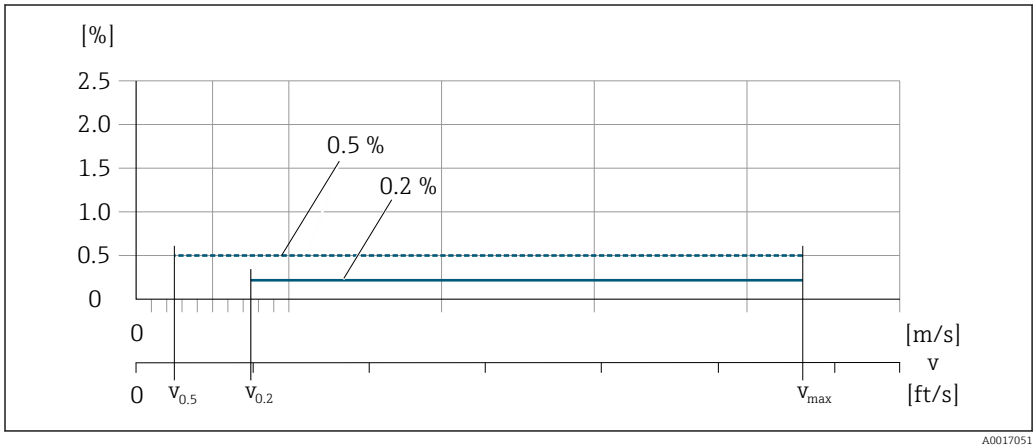

18 *Flat Spec in % o.r.*

Flat Spec flow values 0.5 %

Nominal diameter [mm]	Nominal diameter [in]	$v_{0.5}$ [m/s]	$v_{0.5}$ [ft/s]	v_{max} [m/s]	v_{max} [ft/s]
25 to 600	1 to 24	0.5	1.64	10	32
50 to 300 [1]	2 to 12	0.25	0.82	5	16

1) Order code for "Design", option C

Flat Spec flow values 0.2 %

Nominal diameter		$v_{0.2}$		v_{max}	
[mm]	[in]	[m/s]	[ft/s]	[m/s]	[ft/s]
25 to 600	1 to 24	1.5	4.92	10	32
50 to 300 [1)]	2 to 12	0.6	1.97	4	13

1) Order code for "Design", option C

Electrical conductivity

Max. measured error not specified.

Accuracy of outputs

The outputs have the following base accuracy specifications.

Current output

Accuracy	Max. ±5 µA

Pulse/frequency output

o.r. = of reading

Accuracy	Max. ±50 ppm o.r. (over the entire ambient temperature range)

Repeatability

o.r. = of reading

Volume flow
max. ±0.1 % o.r. ± 0.5 mm/s (0.02 in/s)

Electrical conductivity
Max. ±5 % o.r.

Influence of ambient temperature

Current output

o.r. = of reading

Temperature coefficient	Max. ±0.005 % o.r./°C

Pulse/frequency output

Temperature coefficient	No additional effect. Included in accuracy.

Installation

No special measures such as supports etc. are necessary. External forces are absorbed by the construction of the device.

Mounting location

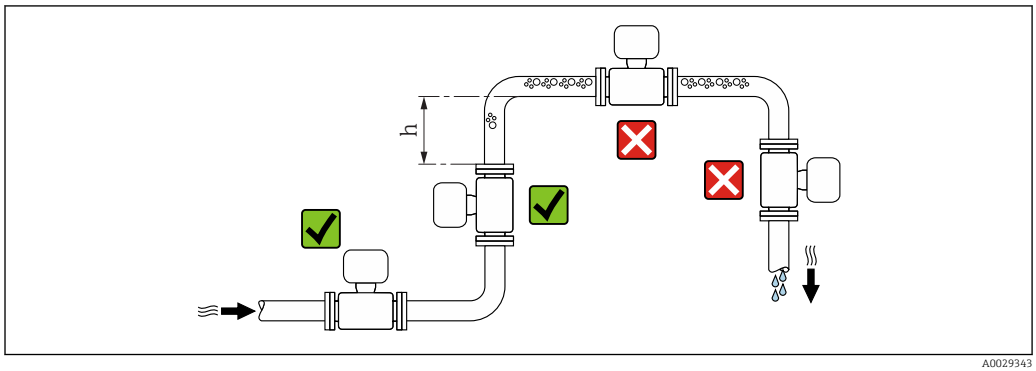

Preferably install the sensor in an ascending pipe, and ensure a sufficient distance to the next pipe elbow: h ≥ 2 × DN.

Distance h ≥ 2 × DN not necessary with order code for "Design", option C, H, I.

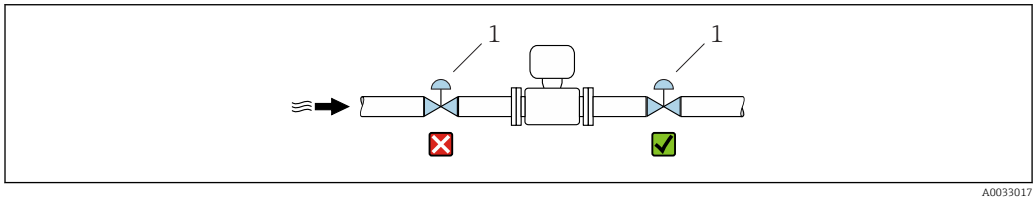

19 *Installation of the sensor after a control valve is not recommended*

1 Control valve

Installation in down pipes

Install a siphon with a vent valve downstream of the sensor in down pipes whose length h ≥ 5 m (16.4 ft). This precaution is to avoid low pressure and the consequent risk of damage to the measuring tube. This measure also prevents the system losing prime.

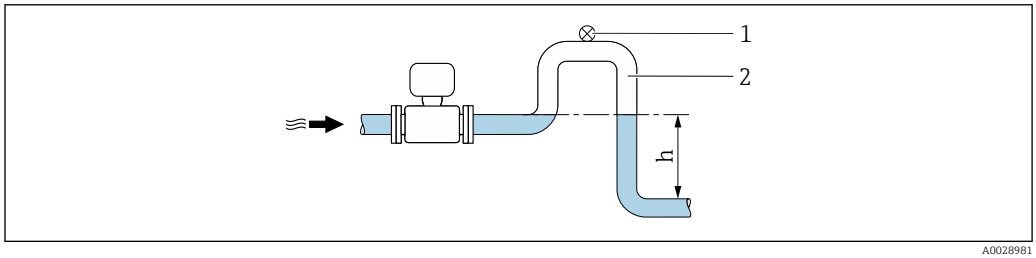

20 *Installation in a down pipe*

1 Vent valve
2 Pipe siphon
h Length of down pipe

Installation in partially filled pipes

A partially filled pipe with a gradient necessitates a drain-type configuration.

No inlet runs necessary with order code for "Design", option C, H, I

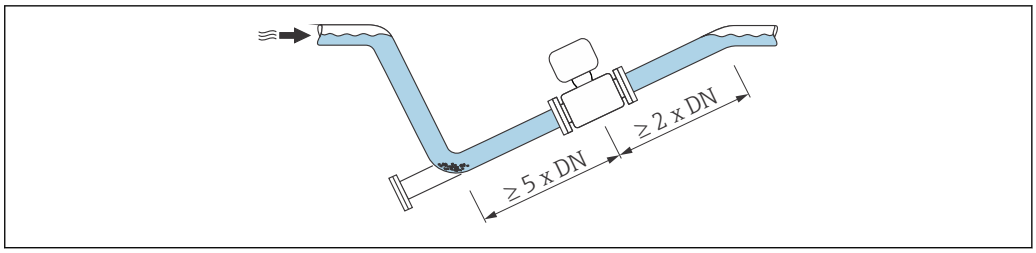

A0029257

For heavy sensors DN ≥ 350 (14")

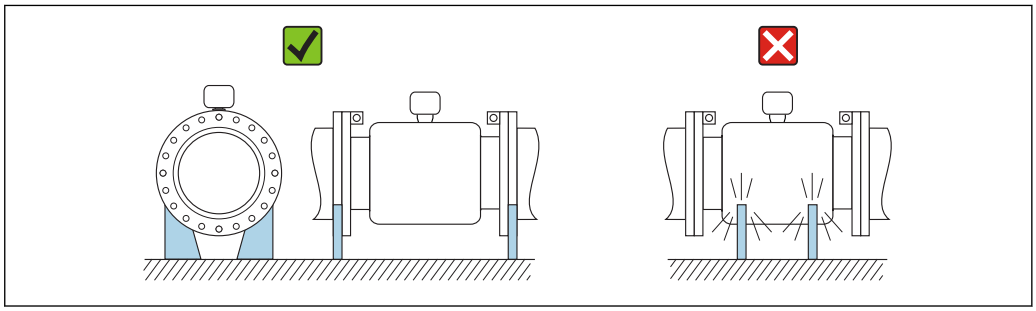

A0016276

Orientation

The direction of the arrow on the sensor nameplate helps you to install the sensor according to the flow direction (direction of medium flow through the piping).

	Orientation		Recommendation
A	Vertical orientation	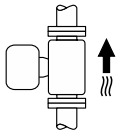 A0015591	✓✓
B	Horizontal orientation, transmitter at top	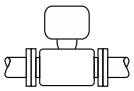 A0015589	✓✓ 1)
C	Horizontal orientation, transmitter at bottom	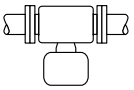 A0015590	✓✓ 2) 3) ✗ 4)
D	Horizontal orientation, transmitter at side	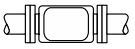 A0015592	✗

1) Applications with low process temperatures may decrease the ambient temperature. To maintain the minimum ambient temperature for the transmitter, this orientation is recommended.
2) Applications with high process temperatures may increase the ambient temperature. To maintain the maximum ambient temperature for the transmitter, this orientation is recommended.
3) To prevent the electronics module from overheating in the case of a sharp rise in temperature (e.g. CIP or SIP processes), install the device with the transmitter component pointing downwards.
4) With the empty pipe detection function switched on: empty pipe detection only works if the transmitter housing is pointing upwards.

Horizontal

- Ideally, the measuring electrode plane should be horizontal. This prevents brief insulation of the measuring electrodes by entrained air bubbles.
- Empty pipe detection only works if the transmitter housing is pointing upwards as otherwise there is no guarantee that the empty pipe detection function will actually respond to a partially filled or empty measuring tube.

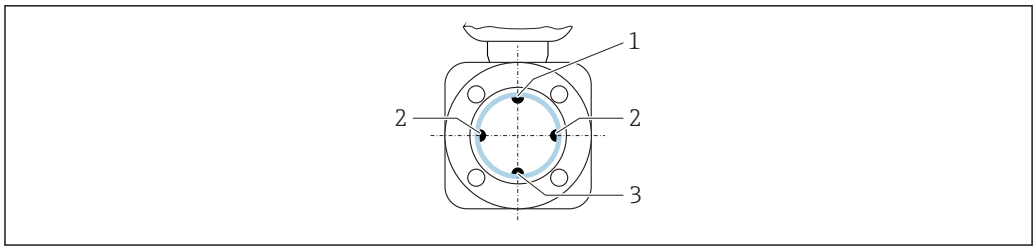

A0029344

1 *EPD electrode for empty pipe detection*
2 *Measuring electrodes for signal detection*
3 *Reference electrode for potential equalization*

Inlet and outlet runs

If possible, install the sensor upstream from fittings such as valves, T-pieces or elbows.

Observe the following inlet and outlet runs to comply with accuracy specifications:

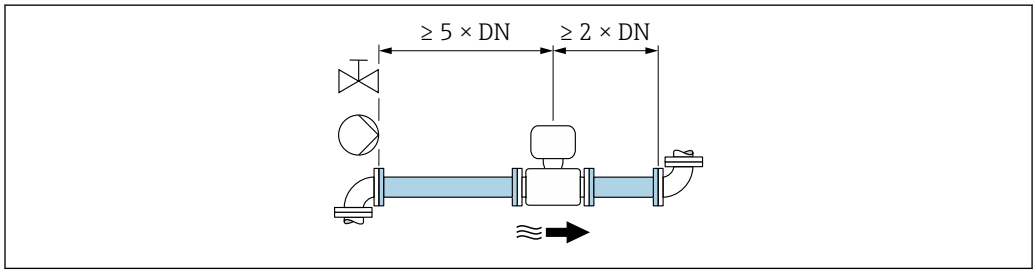

A0028997

For sensors with the order code for "Design", option C , H, I , no inlet or outlet runs need to be taken into account.

To keep within the in-service maximum permissible errors for custody transfer no additional requirements apply with regard to the graphic illustrated above.

Adapters

Suitable adapters to DIN EN 545 (double-flange reducers) can be used to install the sensor in larger-diameter pipes. The resultant increase in the rate of flow improves measuring accuracy with very slow-moving fluids.

The nomogram shown here can be used to calculate the pressure loss caused by reducers and expanders:

- Calculate the ratio of the diameters d/D.
- From the nomogram read off the pressure loss as a function of flow velocity (downstream from the reduction) and the d/D ratio.

The nomogram only applies to liquids with a viscosity similar to that of water.

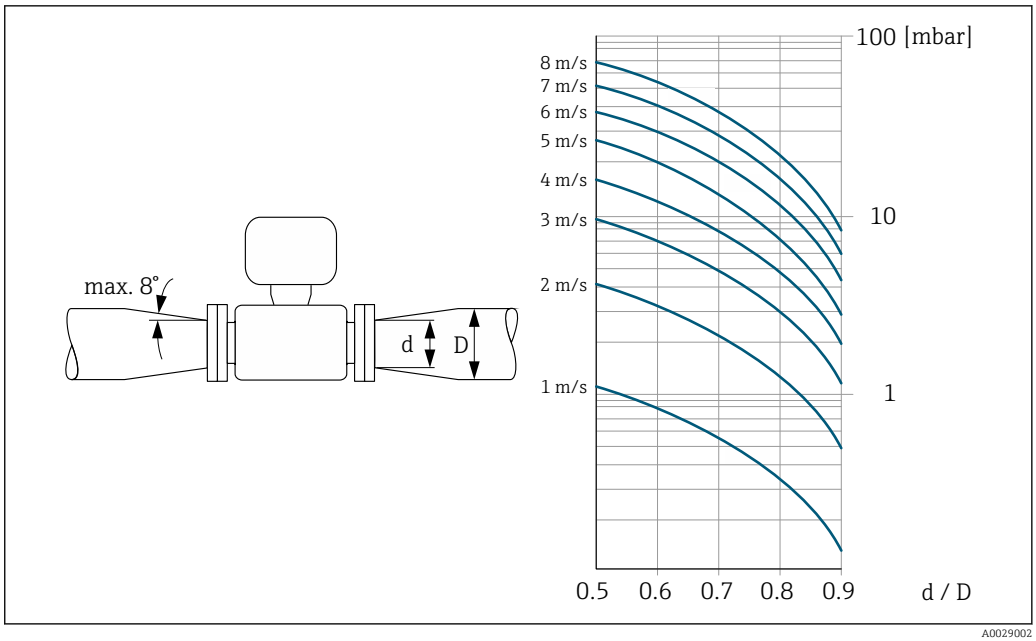

Length of connecting cable

To obtain correct measurement results, observe the permitted connecting cable length of L_{max}. This length is determined by the conductivity of the fluid. If measuring liquids in general: 5 µS/cm

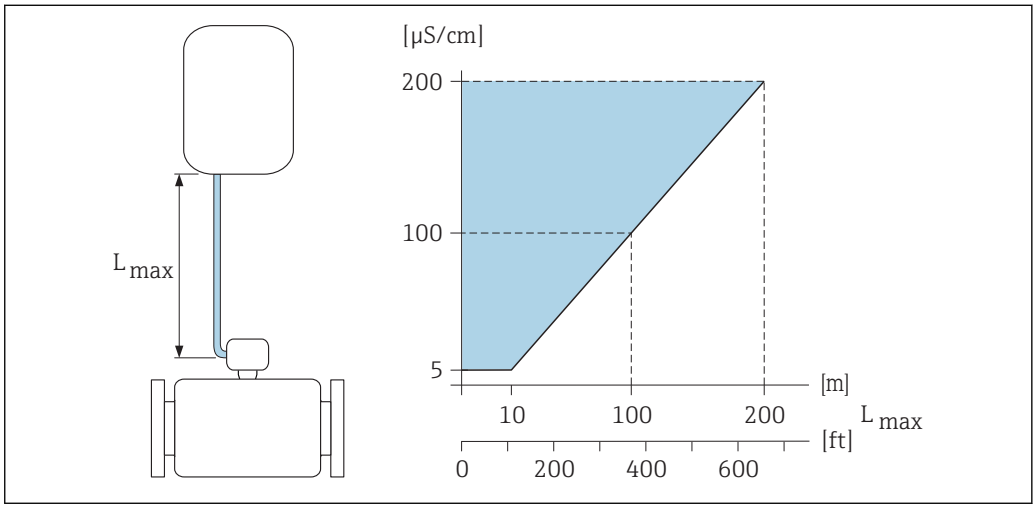

21 Permitted length of connecting cable

Colored area = permitted range
L_{max} = length of connecting cable in [m] ([ft])
[µS/cm] = fluid conductivity

Mounting the transmitter housing

Wall mounting

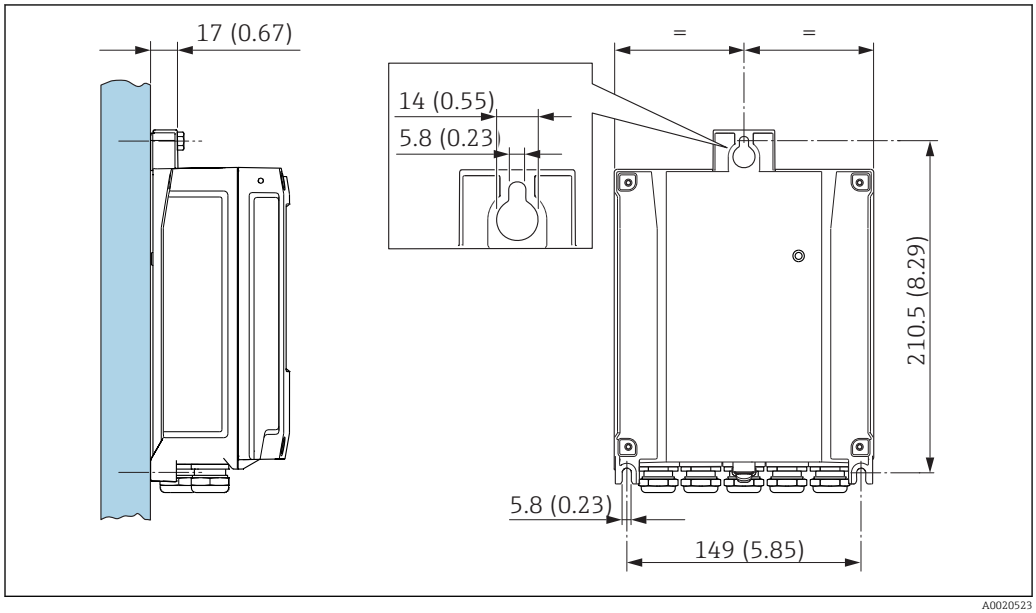

22 *Engineering unit mm (in)*

Post mounting

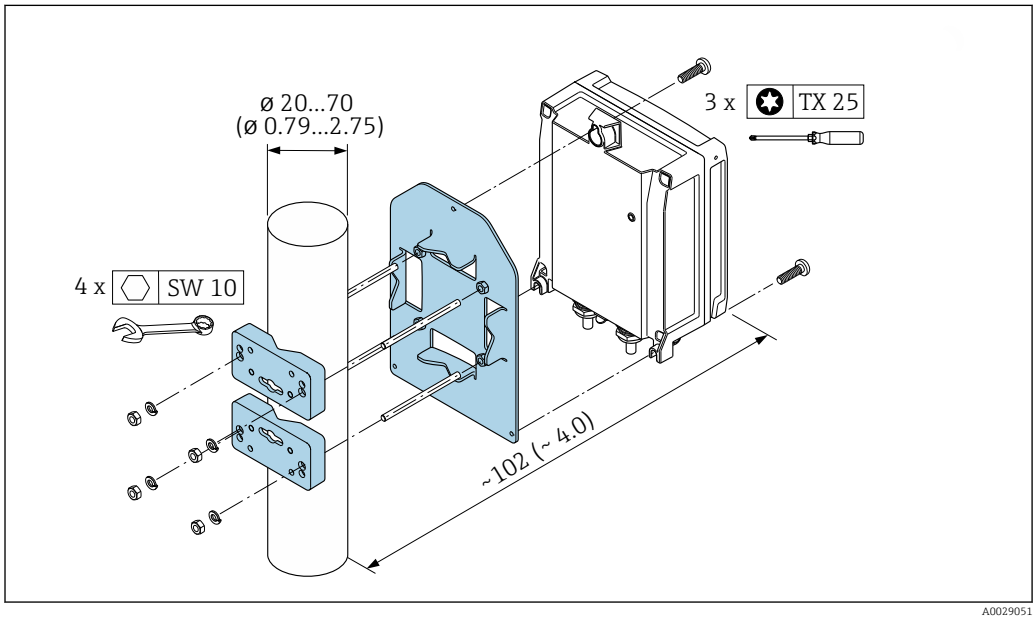

23 *Engineering unit mm (in)*

Special mounting instructions

Display guard

To ensure that the optional display guard can be easily opened, maintain the following minimum head clearance: 350 mm (13.8 in)

Permanent immersion in water

A fully welded remote version with IP68 protection is optionally available for permanent immersion in water ≤ 3 m (10 ft) or in exceptional cases for use for up to 48 hours at ≤ 10 m (30 ft). The measuring device meets the requirements of corrosion categories C5-M and Im1/Im2/Im3. The fully welded design along with the connection compartment sealing system ensure that moisture cannot enter the measuring device.

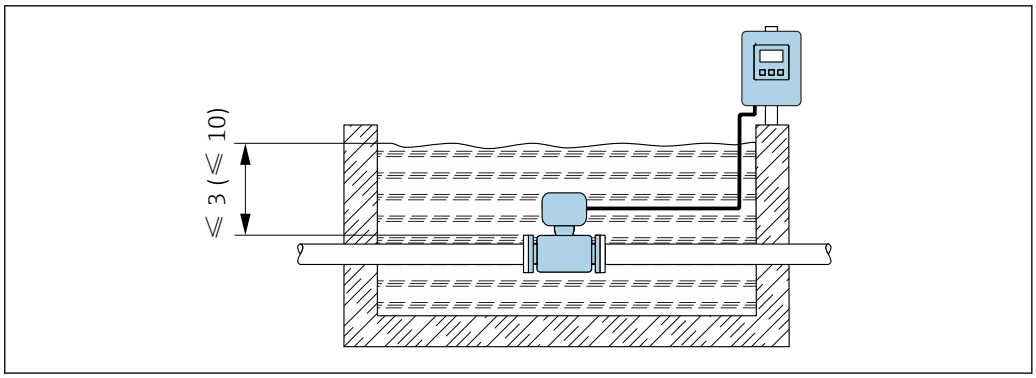

A0029320

24 *Engineering unit in m(ft)*

Replacement of cable gland on connection housing

Buried applications

A remote version with IP68 protection is optionally available for buried applications. The measuring device satisfies the certified corrosion protection Im1/Im2/Im3 in accordance with EN ISO 12944. It can be used directly underground without the need for additional protective measures. The device is mounted in accordance with the usual regional installation regulations (e.g. EN DIN 1610).

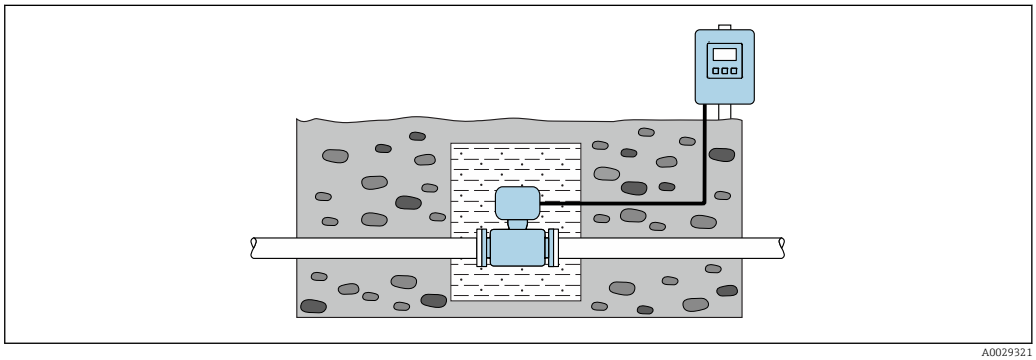

A0029321

Environment

Ambient temperature range

Transmitter	−40 to +60 °C (−40 to +140 °F)
Local display	−20 to +60 °C (−4 to +140 °F), the readability of the display may be impaired at temperatures outside the temperature range.
Sensor	▪ Process connection material, carbon steel: −10 to +60 °C (+14 to +140 °F) ▪ Process connection material, stainless steel: −40 to +60 °C (−40 to +140 °F) Mount the transmitter separately from the sensor if both the ambient and fluid temperatures are high.
Liner	Do not exceed or fall below the permitted temperature range of the liner .

If operating outdoors:
- Install the measuring device in a shady location.
- Avoid direct sunlight, particularly in warm climatic regions.
- Avoid direct exposure to weather conditions.

- If the compact version of the device is insulated at low temperatures, the insulation must also include the device neck.
- Protect the display against impact.
- Protect the display from abrasion by sand in desert areas.

Display guard available as an accessory → 96.

Temperature tables

Observe the interdependencies between the permitted ambient and fluid temperatures when operating the device in hazardous areas.

For detailed information on the temperature tables, see the separate document entitled "Safety Instructions" (XA) for the device.

Storage temperature

The storage temperature corresponds to the operating temperature range of the transmitter and the sensor → 41.

- Protect the measuring device against direct sunlight during storage in order to avoid unacceptably high surface temperatures.
- Select a storage location where moisture cannot collect in the measuring device as fungus or bacteria infestation can damage the liner.
- If protection caps or protective covers are mounted these should never be removed before installing the measuring device.

Atmosphere

If a plastic transmitter housing is permanently exposed to certain steam and air mixtures, this can damage the housing.

In cases of doubt, please contact the Sales Center.

Degree of protection

Transmitter
- As standard: IP66/67, type 4X enclosure
- When housing is open: IP20, type 1 enclosure

Sensor
- As standard: IP66/67, type 4X enclosure
- Optionally available for compact and remote version:
  IP66/67, type 4X enclosure; fully welded, with protective varnish EN ISO 12944 C5-M. Suitable for use in corrosive atmospheres.
- Optionally available for remote version:
  - IP68, type 6P enclosure; fully welded, with protective varnish as per EN ISO 12944 C5-M. Suitable for permanent immersion in water ≤ 3 m (10 ft) or up to 48 hours at depths ≤ 10 m (30 ft).
  - IP68, type 6P enclosure; fully welded, with protective varnish as per EN ISO 12944 Im1/Im2/Im3. Suitable for permanent immersion in saline water ≤ 3 m (10 ft) or up to 48 hours at depths ≤ 10 m (30 ft) or in buried applications.

Vibration- and shock-resistance

Vibration sinusoidal, in accordance with IEC 60068-2-6

Compact version; order code for "Housing", option A "Compact, alu, coated"
- 2 to 8.4 Hz, 3.5 mm peak
- 8.4 to 2 000 Hz, 1 g peak

Compact version; order code for "Housing", option M "Compact, polycarbonate"
- 2 to 8.4 Hz, 7.5 mm peak
- 8.4 to 2 000 Hz, 2 g peak

Remote version; order code for "Housing", option N "Remote, polycarbonate" and option P "Remote, alu, coated"
- 2 to 8.4 Hz, 7.5 mm peak
- 8.4 to 2 000 Hz, 2 g peak

Vibration broad-band random, according to IEC 60068-2-64

Compact version; order code for "Housing", option A "Compact, alu, coated"
- 10 to 200 Hz, 0.003 g^2/Hz
- 200 to 2 000 Hz, 0.001 g^2/Hz
- Total: 1.54 g rms

Compact version; order code for "Housing", option M "Compact, polycarbonate"
- 10 to 200 Hz, 0.01 g^2/Hz
- 200 to 2 000 Hz, 0.003 g^2/Hz
- Total: 2.70 g rms

Remote version; order code for "Housing", option N "Remote, polycarbonate" and option P "Remote, alu, coated"
- 10 to 200 Hz, 0.01 g^2/Hz
- 200 to 2 000 Hz, 0.003 g^2/Hz
- Total: 2.70 g rms

Shock half-sine, according to IEC 60068-2-27

- Compact version; order code for "Housing", option A "Compact, alu, coated"
  6 ms 30 g
- Compact version; order code for "Housing", option M "Compact, polycarbonate"
  6 ms 50 g
- Remote version; order code for "Housing", option N "Remote, polycarbonate" and option P "Remote, alu, coated"
  6 ms 50 g

Rough handling shocks according to IEC 60068-2-31

Mechanical load

- Protect the transmitter housing against mechanical effects, such as shock or impact; the use of the remote version is sometimes preferable.
- Never use the transmitter housing as a ladder or climbing aid.

Electromagnetic compatibility (EMC)

- As per IEC/EN 61326 and NAMUR Recommendation 21 (NE 21)
- Complies with emission limits for industry as per EN 55011 (Class A)
- Device version with PROFIBUS DP: Complies with emission limits for industry as per EN 50170 Volume 2, IEC 61784

The following applies for PROFIBUS DP: If baud rates > 1.5 MBaud, an EMC cable entry must be used and the cable shield must continue as far as the terminal wherever possible.

Details are provided in the Declaration of Conformity.

Process

Medium temperature range

- 0 to +80 °C (+32 to +176 °F) for hard rubber, DN 50 to 2400 (2 to 90")
- −20 to +50 °C (−4 to +122 °F) for polyurethane, DN 25 to 1200 (1 to 48")
- −20 to +90 °C (−4 to +194 °F) for PTFE, DN 25 to 300 (1 to 12")

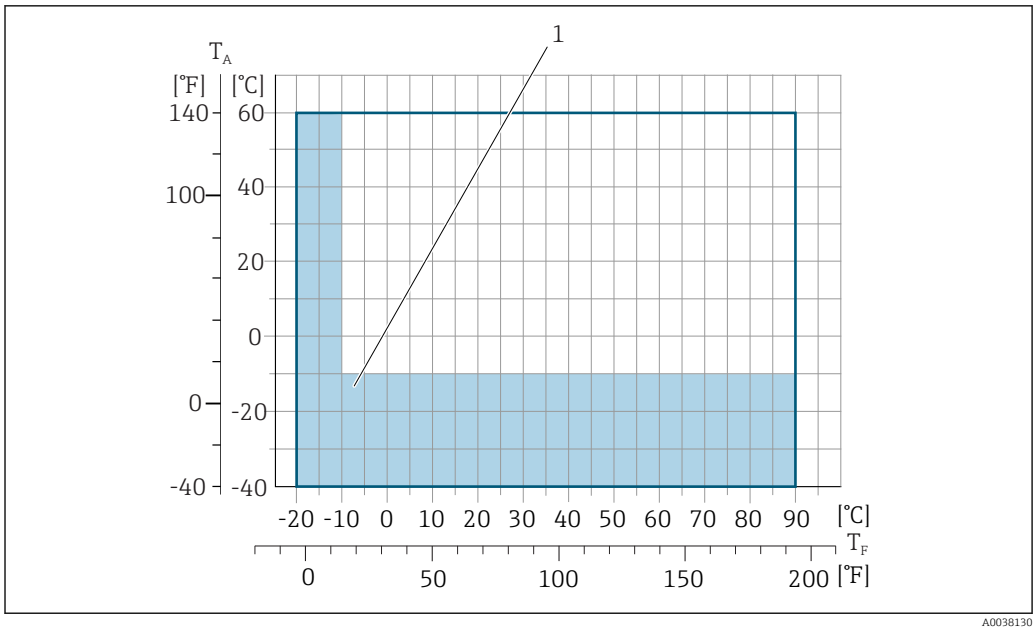

T_A *Ambient temperature range*
T_F *Medium temperature*
1 *Colored area: the ambient temperature range of −10 to −40 °C (+14 to −40 °F) and the fluid temperature range of −10 to −20 °C (+14 to −4 °F) applies to stainless flanges only*

The permitted fluid temperature in custody transfer is 0 to +50 °C (+32 to +122 °F).

Conductivity

≥ 5 µS/cm for liquids in general.

Remote version
The necessary minimum conductivity also depends on the cable length → 39.

Pressure-temperature ratings

The following pressure/temperature diagrams apply to all pressure-bearing parts of the device and not just the process connection. The diagrams show the maximum permissible medium pressure depending on the specific medium temperature.

Process connection: fixed flange according to EN 1092-1 (DIN 2501)

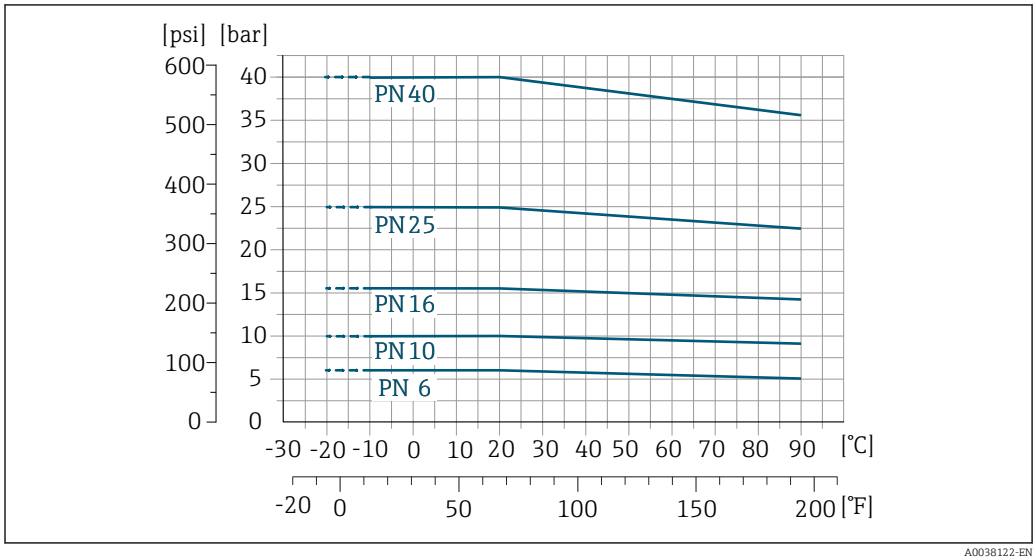

25 *Process connection material: stainless steel (−20 °C (−4 °F)); carbon steel (−10 °C (14 °F))*

Process connection: fixed flange according to ASME B16.5

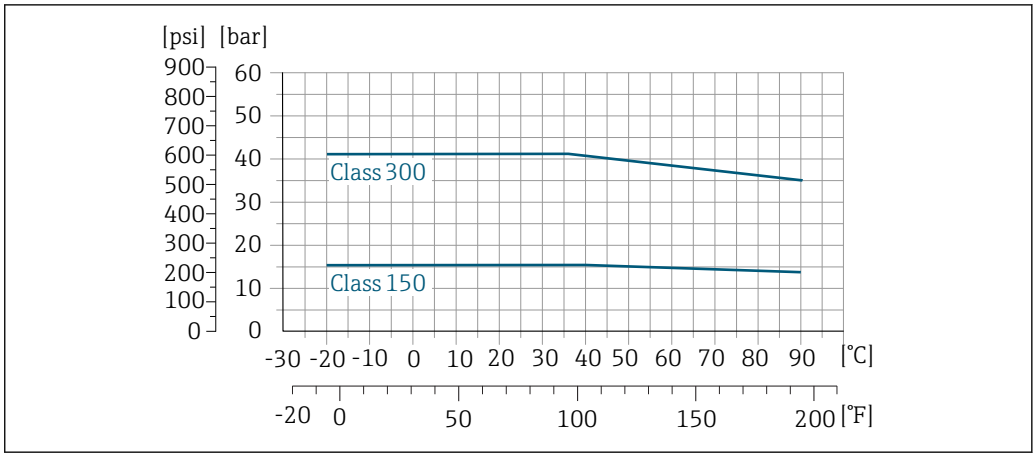

26 *Process connection material: stainless steel*

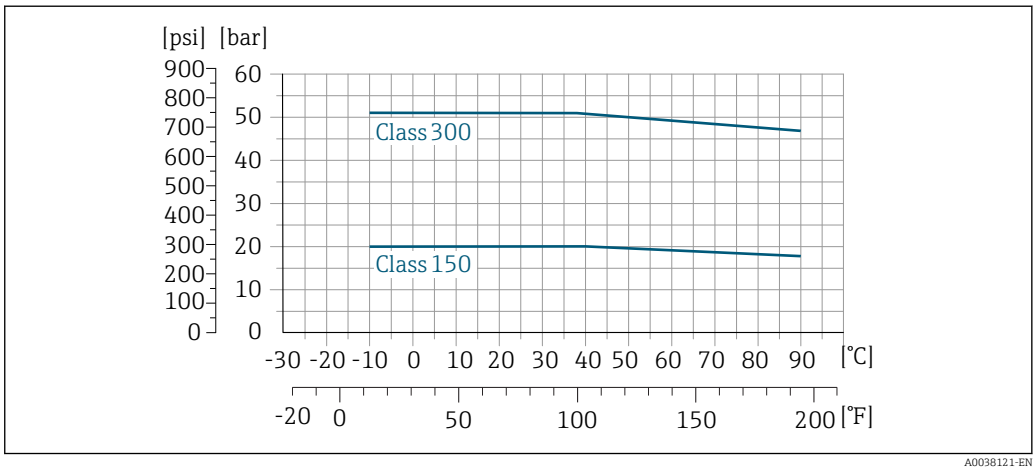

27 *Process connection material: carbon steel*

Process connection: fixed flange according to JIS B2220

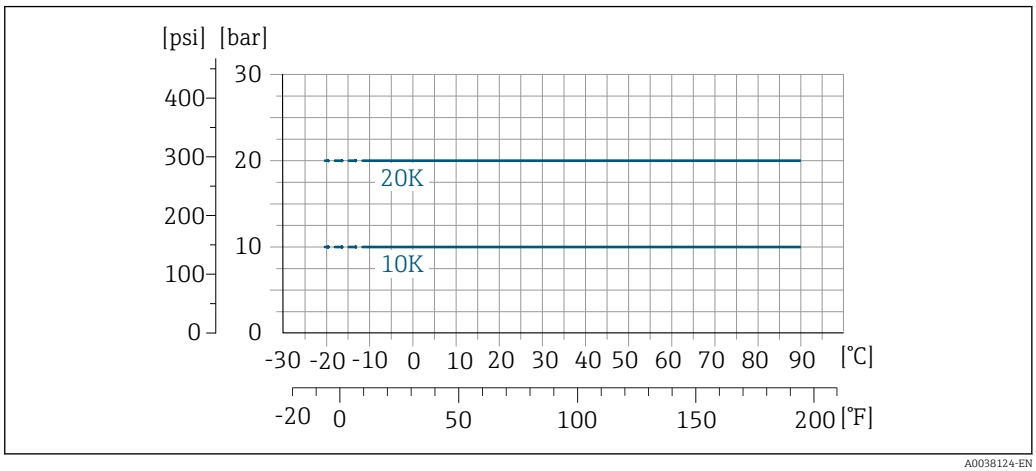

28 *Process connection material: stainless steel (−20 °C (−4 °F)); carbon steel (−10 °C (14 °F))*

Process connection: fixed flange according to AWWA C207

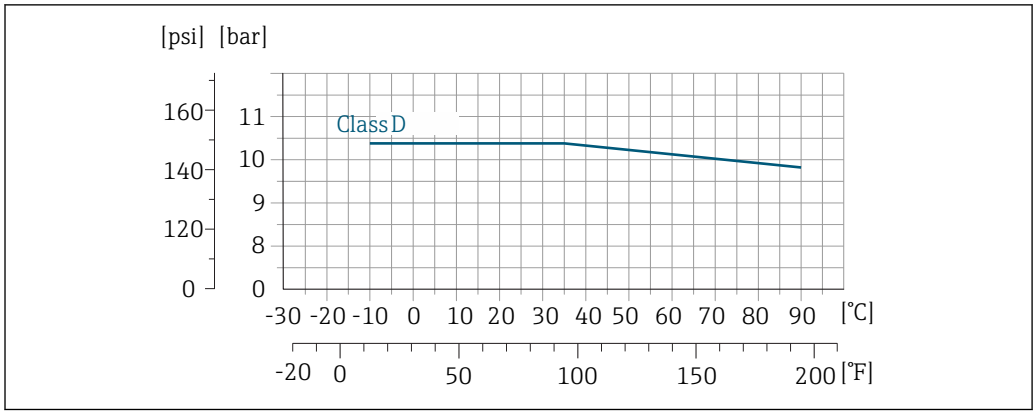

29 *Process connection material: carbon steel*

Process connection: fixed flange according to AS 2129

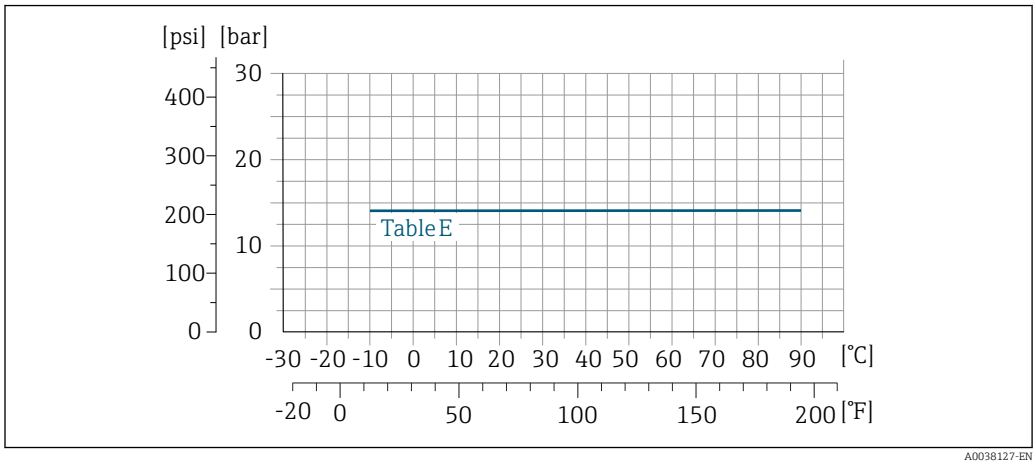

30 *Process connection material: carbon steel*

Process connection: fixed flange according to AS 4087

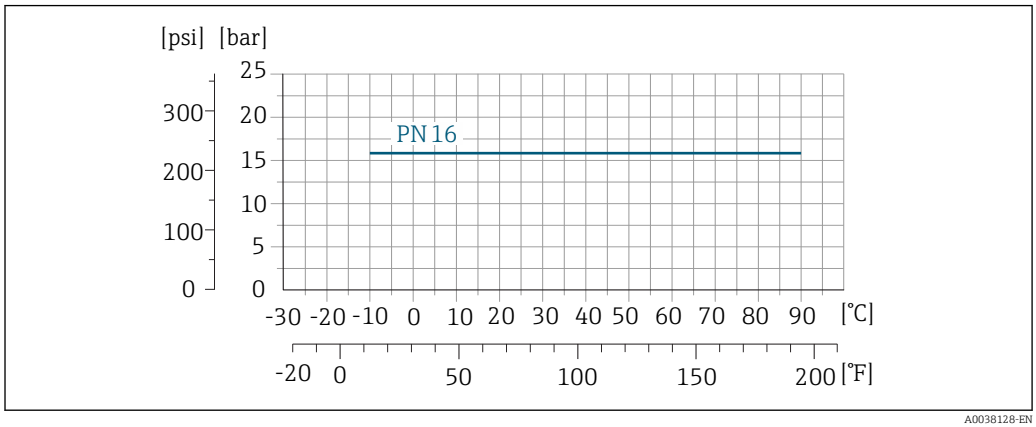

31 *Process connection material: carbon steel*

Process connection: lap joint flange/lap joint flange, stamped plate according to EN 1092-1 (DIN 2501) and ASME B16.5; DN 25 to 300 (1 to 12")

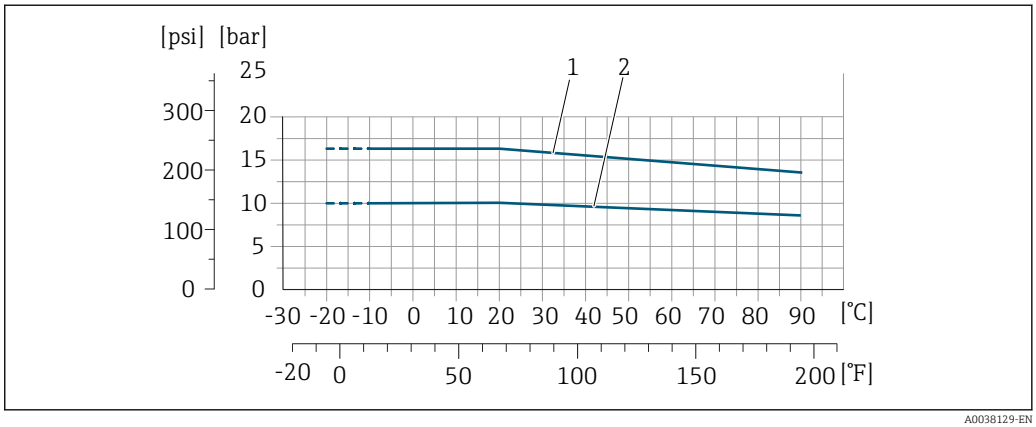

32 *Process connection material: stainless steel (−20 °C (−4 °F)); carbon steel (−10 °C (14 °F))*

1 *Lap joint flange PN16/ Class150*
2 *Lap joint flange, stamped plate PN10, lap joint flange PN10*

Pressure tightness

Liner: hard rubber

Nominal diameter		Limit values for absolute pressure in [mbar] ([psi]) for medium temperatures:		
[mm]	[in]	+25 °C (+77 °F)	+50 °C (+122 °F)	+80 °C (+176 °F)
50 … 2400	2 … 90	0 (0)	0 (0)	0 (0)

Liner: polyurethane

Nominal diameter		Limit values for absolute pressure in [mbar] ([psi]) for medium temperatures:	
[mm]	[in]	+25 °C (+77 °F)	+50 °C (+122 °F)
25 … 1200	1 … 48	0 (0)	0 (0)

Liner: PTFE

Nominal diameter		Limit values for absolute pressure in [mbar] ([psi]) for medium temperatures:	
[mm]	[in]	+25 °C (+77 °F)	+90 °C (+194 °F)
25	1	0 (0)	0 (0)
40	2	0 (0)	0 (0)
50	2	0 (0)	0 (0)
65	2 ½	0 (0)	40 (0.58)
80	3	0 (0)	40 (0.58)
100	4	0 (0)	135 (2.0)
125	5	135 (2.0)	240 (3.5)
150	6	135 (2.0)	240 (3.5)
200	8	200 (2.9)	290 (4.2)
250	10	330 (4.8)	400 (5.8)
300	12	400 (5.8)	500 (7.3)

Flow limit

The diameter of the pipe and the flow rate determine the nominal diameter of the sensor. The optimum velocity of flow is between 2 to 3 m/s (6.56 to 9.84 ft/s). Also match the velocity of flow (v) to the physical properties of the fluid:
- v < 2 m/s (6.56 ft/s): for abrasive fluids (e.g. potter's clay, lime milk, ore slurry)
- v > 2 m/s (6.56 ft/s): for fluids producing buildup (e.g. wastewater sludge)

A necessary increase in the flow velocity can be achieved by reducing the sensor nominal diameter.

For an overview of the full scale values for the measuring range, see the "Measuring range" section → 9

For custody transfer, the applicable approval determines the permitted measuring range.

Pressure loss

- No pressure loss occurs if the sensor is installed in a pipe with the same nominal diameter.
- Pressure losses for configurations incorporating adapters according to DIN EN 545 → 38

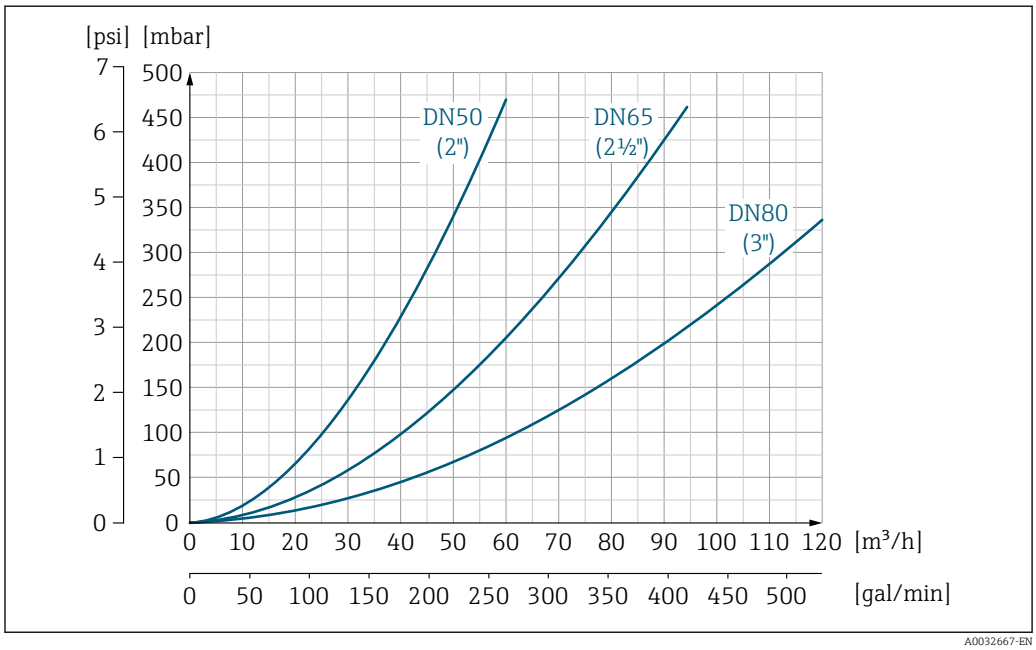

33 *Pressure loss DN 50 to 80 (2 to 3") for order code for "Design", option C "fixed flange, without inlet/outlet runs"*

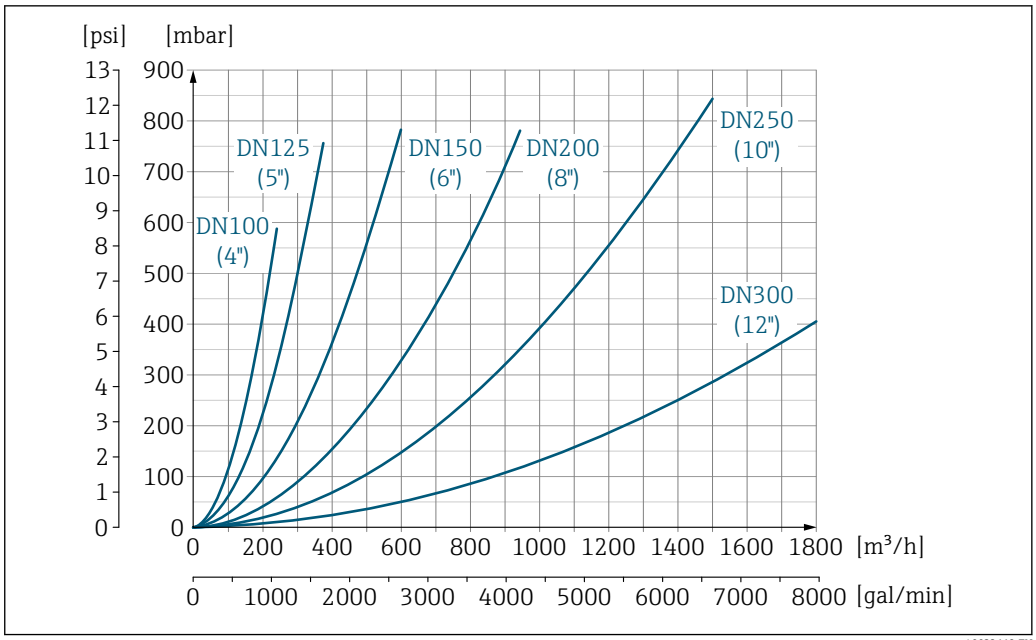

34 *Pressure loss DN 100 to 300 (4 to 12") for order code for "Design", option C "fixed flange, without inlet/ outlet runs"*

System pressure

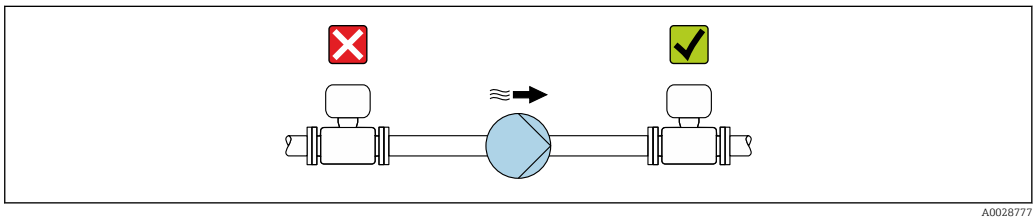

Never install the sensor on the pump suction side in order to avoid the risk of low pressure, and thus damage to the liner.

Furthermore, install pulse dampers if reciprocating, diaphragm or peristaltic pumps are used.

- Information on the liner's resistance to partial vacuum → 47
- Information on the shock resistance of the measuring system
- Information on the vibration resistance of the measuring system

Vibrations

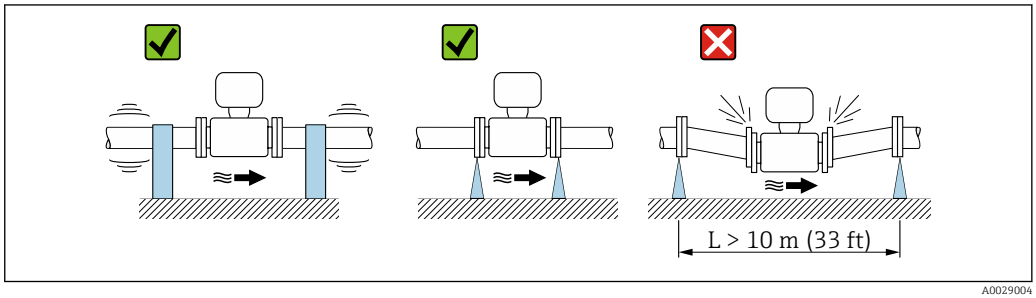

35 *Measures to prevent vibration of the device*

In the event of very strong vibrations, the pipe and sensor must be supported and fixed.

It is also advisable to mount the sensor and transmitter separately.

- Information on the shock resistance of the measuring system
- Information on the vibration resistance of the measuring system

Custody transfer mode

The measuring device is optionally tested in accordance with OIML R137 and has an EU type-examination certificate according to Measuring Instruments Directive 2014/32/EU for service subject to legal metrological control ("custody transfer") for cold water (Annex III).

The permitted fluid temperature in these applications is 0 to +50 °C (+32 to +122 °F).

The device is used with a legally controlled totalizer on the local display and optionally with legally controlled outputs.

Measuring devices subject to legal metrological control totalize in both directions, i.e. all the outputs consider flow components in the positive (forward) and negative (reverse) flow direction.

Generally a measuring device subject to legal metrological control is secured against tampering by seals on the transmitter or sensor. These seals may normally only be opened by a representative of the competent authority for legal metrology controls.

After putting the device into circulation or after sealing the device, operation is only possible to a limited extent.

Detailed ordering information is available from your local Endress+Hauser sales center for national approvals (outside Europe) as cold water meters based on OIML R49.

Mechanical construction

Dimensions in SI units

Compact version

Order code for "Housing", option A "Compact, aluminum, coated" or option M "Compact, polycarbonate"

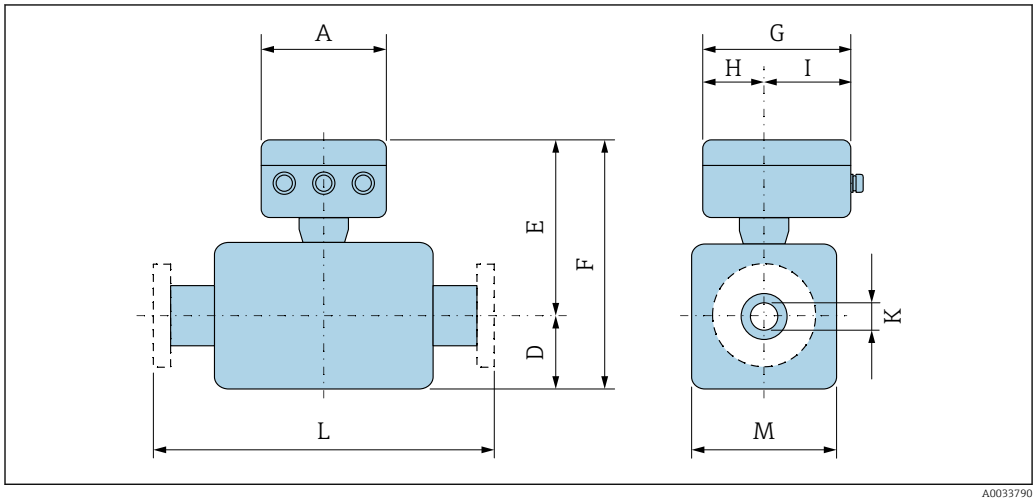

A0033790

A [mm]	G [1] [mm]	H [mm]	I [1] [mm]
167	193	90	103

1) Depending on the cable gland used: values up to + 30 mm

DN 25 to 300 (1 to 12"): sensor with aluminum half-shell housing

DN		Order code for "Design"								K	L
		Options A, D, E, H, I				Option C					
		D [1]	E [1) 2)]	F [1) 2)]	M [1)]	D [1)]	E [1) 2)]	F [1) 2)]	M [1)]		
[mm]	[in]	[mm]	[mm]	[mm]	[mm]	[mm]	[mm]	[mm]	[mm]	[mm]	[mm]
25	1	84	201	285	120	–	–	–	–	3)	200
32	–	84	201	285	120	–	–	–	–	3)	200
40	1 ½	84	201	285	120	–	–	–	–	3)	200
50	2	84	201	285	120	84	201	285	120	3)	200
65	–	109	226	335	180	84	201	285	120	3)	200
80	3	109	226	335	180	84	201	285	120	3)	200
100	4	109	226	335	180	109	226	335	180	3)	250
125	–	150	266	416	260	109	226	335	180	3)	250
150	6	150	266	416	260	109	226	335	180	3)	300
200	8	180	291	471	324	150	266	416	260	3)	350
250	10	205	316	521	400	150	266	416	260	3)	450
300	12	230	341	571	460	180	291	471	324	3)	500

1) The dimensions are reference values. They may vary depending on the pressure rating, design and order option.
2) With order code for "Sensor option", option CG "Sensor extended neck for insulation": values + 110 mm
3) Depends on the liner→ 🖹 81

DN 350 to 900 (14 to 36")

DN		Order code for "Design"								K	L	
		Options A, E, F				Option B, G						
		D [1)]	E [1) 2)]	F [1) 2)]	M [1)]	D [1)]	E [1) 2)]	F [1) 2)]	M [1)]			
[mm]	[in]	[mm]	[mm]	[mm]	[mm]	[mm]	[mm]	[mm]	[mm]	[mm]	[mm]	
350	14	245	412	658	490	–	–	–	–	3)	550	
375	15	271	438	709	542	–	–	–	–	3)	550	
400	16	271	438	709	542	–	–	–	–	3)	600	
450	18	299	466	765	598	333	450	783	666	3)	600 [4)]	650 [5)]
500	20	324	491	815	648	359	475	834	717	3)	600 [4)]	650 [5)]
600	24	365	542	907	730	411	528	939	821	3)	600 [4)]	780 [5)]
700	28	430	603	1033	860	512	630	1142	1024	3)	700 [4)]	910 [5)]
750	30	467	641	1108	934	512	630	1142	1024	3)	700 [4)]	910 [5)]
800	32	486	660	1146	972	534	650	1184	1065	3)	800 [4)]	1040 [5)]
900	36	536	710	1246	1072	610	727	1337	1218	3)	900 [4)]	1170 [5)]

1) The dimensions are reference values. They may be different than indicated, depending on the pressure rating, design and order code.
2) With order code for "Sensor option", option CG "Sensor extended neck for insulation": values + 110 mm
3) Depends on the liner→ 🖹 81
4) Order code for "Design", option F "Fixed flange, short installation length"
5) Order code for "Design", option G "Fixed flange, long installation length"

DN 1000 to 2400 (40 to 90")

DN		D [1]	E [1) 2)]	F [1) 2)]	K	L		M [1]
[mm]	[in]	[mm]	[mm]	[mm]	[mm]	[mm]		[mm]
1000	40	686	803	1 489	[3]	1 000 [4]	1 300 [5]	1 370
–	42	712	828	1 540	[3]	1 050 [4]	1 365 [5]	1 420
1200	48	811	929	1 740	[3]	1 200 [4]	1 560 [5]	1 620
–	54	912	1 029	1 941	[3]	1 350 [4]	1 755 [5]	1 820
1400	–	987	1 104	2 091	[3]	1 400 [4]	1 820 [5]	1 970
–	60	1 011	1 128	2 139	[3]	1 500 [4]	1 950 [5]	2 018
1600	–	1 056	1 173	2 229	[3]	1 600 [4]	2 080 [5]	2 108
–	66	1 093	1 209	2 302	[3]	1 650 [4]	2 145 [5]	2 180
1800	72	1 188	1 304	2 492	[3]	1 800 [4]	2 340 [5]	2 370
–	78	1 238	1 354	2 592	[3]	2 000 [4]	2 600 [5]	2 470
2000	–	1 238	1 354	2 592	[3]	2 000 [4]	2 600 [5]	2 470
–	84	1 238	1 354	2 592	[3]	2 200 [4]		2 470
2200	–	1 227	1 346	2 573	[3]	2 200 [4]		2 454
–	90	1 227	1 346	2 573	[3]	2 400 [4]		2 454
2400	–	1 332	1 451	2 783	[3]	2 400 [4]		2 664

1) The dimensions are reference values. They may be different than indicated, depending on the pressure rating, design and order code.
2) With order code for "Sensor option", option CG "Sensor extended neck for insulation": values + 110 mm
3) Depends on the liner→ 🖹 81
4) Order code for "Design", option F "Fixed flange, short installation length"
5) Order code for "Design", option G "Fixed flange, long installation length"

Remote version

Transmitter remote version

Order code for "Housing", option N "Remote, polycarbonate" or option P "Remote, aluminum coated"

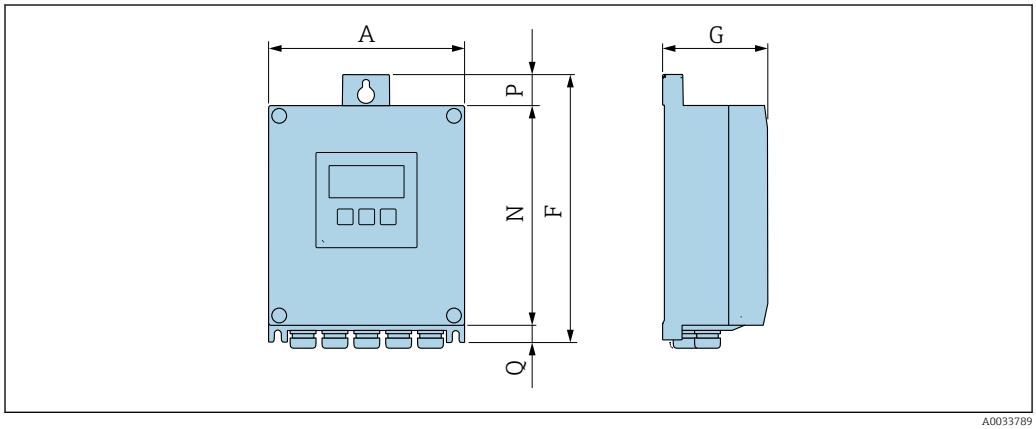

A0033789

A [mm]	F [mm]	G [mm]	N [mm]	P [mm]	Q [mm]
167	232	80	187	24	21

Sensor connection housing

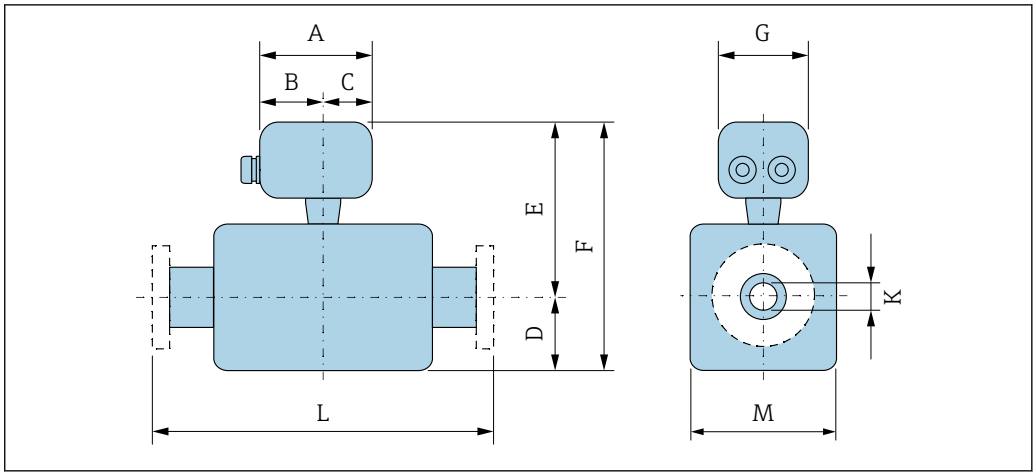

A0033784

Aluminum, coated

A [mm]	B [mm]	C [mm]	G [mm]
148	94	54	136

Polycarbonate (only in conjunction with order code for "Sensor option", options CA...CE)

A [mm]	B [mm]	C [mm]	G [mm]
113	62	51	112

DN 25 to 300 (1 to 12"): sensor with aluminum half-shell housing

DN		Order code for "Design"								K	L
		Options A, D, E, H, I				Option C					
		D [1]	E [1]	F [1]	M [1]	D [1]	E [1]	F [1]	M [1]		
[mm]	[in]	[mm]	[mm]	[mm]	[mm]	[mm]	[mm]	[mm]	[mm]	[mm]	[mm]
25	1	84	200	284	120	–	–	–	–	[2]	200
32	–	84	200	284	120	–	–	–	–	[2]	200
40	1 ½	84	200	284	120	–	–	–	–	[2]	200
50	2	84	200	284	120	84	200	284	120	[2]	200
65	–	109	225	334	180	84	200	284	120	[2]	200
80	3	109	225	334	180	84	200	284	120	[2]	200
100	4	109	225	334	180	109	225	334	180	[2]	250
125	–	150	265	415	260	109	225	334	180	[2]	250
150	6	150	265	415	260	109	225	334	180	[2]	300
200	8	180	290	470	324	150	265	415	260	[2]	350
250	10	205	315	520	400	150	265	415	260	[2]	450
300	12	230	340	570	460	180	290	470	324	[2]	500

1) The dimensions are reference values. They may vary depending on the pressure rating, design and order option.
2) Depends on the liner→ 🖹 81

DN 25 to 300 (1 to 12"): sensor with fully welded carbon steel housing

DN		Order code for "Design"								K	L
		Options A, E				Option C					
		D [1]	E [1]	F [1]	M [1]	D [1]	E [1]	F [1]	M [1]		
[mm]	[in]	[mm]	[mm]	[mm]	[mm]	[mm]	[mm]	[mm]	[mm]	[mm]	[mm]
25	1	70	200	270	140	–	–	–	–	[2]	200
32	–	70	200	270	140	–	–	–	–	[2]	200
40	1 ½	70	200	270	140	–	–	–	–	[2]	200
50	2	70	200	270	140	70	200	270	140	[2]	200
65	–	82	225	307	165	70	200	270	140	[2]	200
80	3	87	225	312	175	70	200	270	140	[2]	200
100	4	100	225	325	200	82	225	307	165	[2]	250
125	–	113	265	378	226	87	225	312	175	[2]	250
150	6	134	265	399	269	100	225	325	200	[2]	300
200	8	160	290	450	320	113	265	378	226	[2]	350
250	10	193	315	508	387	134	265	399	269	[2]	450
300	12	218	340	558	437	160	290	450	320	[2]	500

1) The dimensions are reference values. They may vary depending on the pressure rating, design and order option.
2) Depends on the liner→ 🖹 81

DN 350 to 900 (14 to 36")

DN		Order code for "Design"								K	L	
		Options A, E, F				Option B, G						
		D [1]	E [1]	F [1]	M [1]	D [1]	E [1]	F [1]	M [1]			
[mm]	[in]	[mm]	[mm]	[mm]	[mm]	[mm]	[mm]	[mm]	[mm]	[mm]	[mm]	
350	14	245	350	595	490	–	–	–	–	[2]	550	
375	15	271	375	646	542	–	–	–	–	[2]	550	
400	16	271	375	646	542	–	–	–	–	[2]	600	
450	18	299	403	702	598	333	447	780	666	[2]	600 [3]	650 [4]
500	20	324	428	752	648	359	472	831	717	[2]	600 [3]	650 [4]
600	24	365	479	844	730	411	525	936	821	[2]	600 [3]	780 [4]
700	28	430	540	970	860	512	627	1139	1024	[2]	700 [3]	910 [4]
750	30	467	578	1045	934	512	627	1139	1024	[2]	700 [3]	910 [4]
800	32	486	597	1083	972	534	647	1181	1065	[2]	800 [3]	1040 [4]
900	36	536	647	1183	1072	610	724	1334	1218	[2]	900 [3]	1170 [4]

1) The dimensions are reference values. They may vary depending on the pressure rating, design and order option.
2) Depends on the liner→ 🖹 81
3) Order code for "Design", option F "Fixed flange, short installation length"
4) Order code for "Design", option G "Fixed flange, long installation length"

1000 ... 2400 (40 ... 90")

DN		D [1]	E [1]	F [1]	K	L		M [1]
[mm]	[in]	[mm]	[mm]	[mm]	[mm]	[mm]		[mm]
1000	40	686	800	1486	[2]	1000 [3]	1300 [4]	1370
–	42	712	825	1537	[2]	1050 [3]	1365 [4]	1420
1200	48	811	926	1737	[2]	1200 [3]	1560 [4]	1620
–	54	912	1026	1938	[2]	1350 [3]	1755 [4]	1820
1400	–	987	1101	2088	[2]	1400 [3]	1820 [4]	1970
–	60	1011	1125	2136	[2]	1500 [3]	1950 [4]	2018
1600	–	1056	1170	2226	[2]	1600 [3]	2080 [4]	2108
–	66	1093	1206	2299	[2]	1650 [3]	2145 [4]	2180
1800	72	1188	1301	2489	[2]	1800 [3]	2340 [4]	2370
–	78	1238	1351	2589	[2]	2000 [3]	2600 [4]	2470
2000	–	1238	1351	2589	[2]	2000 [3]	2600 [4]	2470
–	84	1238	1351	2589	[2]	2200 [3]		2470
2200	–	1227	1343	2570	[2]	2200 [3]		2454
–	90	1227	1343	2570	[2]	2400 [3]		2454
2400	–	1332	1448	2780	[2]	2400 [3]		2664

1) The dimensions are reference values. They may be different than indicated, depending on the pressure rating, design and order code.
2) Internal diameter depends on liner, see measuring tube specification → 🖹 81
3) Order code for "Design", option F "Fixed flange, short installation length"
4) Order code for "Design", option G "Fixed flange, long installation length"

Flange connections

Fixed flange

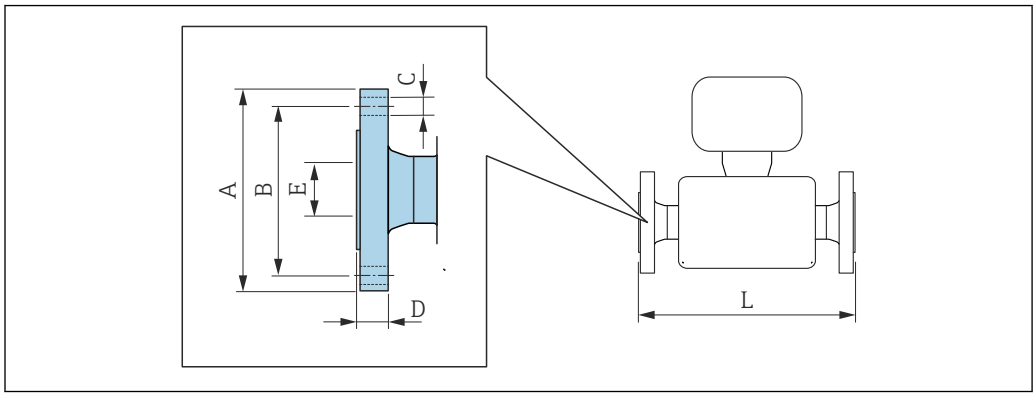

A0015621

Flange in accordance with EN 1092-1 (DIN 2501 / DIN 2512N): PN 6 **Carbon steel:** *order code for "Process connection", option* **D1K** **Stainless steel:** *order code for "Process connection", option* **D1S**						
DN **[mm]**	**A** **[mm]**	**B** **[mm]**	**C** **[mm]**	**D** **[mm]**	**E** **[mm]**	**L** **[mm]**
350	490	445	12 × Ø22	22	1)	2)
400	540	495	16 × Ø22	22		
450	595	565	20 × Ø26	26		
500	645	600	20 × Ø22	24		
600	755	705	20 × Ø26	30		
700	860	810	24 × Ø26	30		
800	975	920	24 × Ø30	30		
900	1075	1020	24 × Ø30	34		
1000	1175	1120	28 × Ø30	38		
1200	1405	1340	32 × Ø33	42		
1400	1630	1560	36 × Ø36	56		
1600	1830	1760	40 × Ø36	63		
1800	2045	1970	44 × Ø39	69		
2000	2265	2180	48 × Ø42	74		
2200	2475	2390	52 × Ø42	81		
2400	2685	2600	56 × Ø42	87		
Surface roughness (flange): EN 1092-1 Form B1 (DIN 2526 Form C), Ra 6.3 to 12.5 µm						

1) Depends on the liner→ 🖹 81
2) Total length is independent of the process connections. Length according to DVGW (German Technical and Scientific Association for Gas and Water) → 🖹 50 (compact version) → 🖹 53 (remote version)

Flange in accordance with EN 1092-1 (DIN 2501 / DIN 2512N): PN 10
Carbon steel: *order code for "Process connection", option* **D2K**
Stainless steel: *order code for "Process connection", option* **D2S**

DN [mm]	A [mm]	B [mm]	C [mm]	D [mm]	E [mm]	L [mm]
200	340	295	8 × Ø22	26	1)	2)
250	395	350	12 × Ø22	28		
300	445	400	12 × Ø22	28		
350	505	460	16 × Ø22	26		
400	565	515	16 × Ø26	26		
450	615	565	20 × Ø26	26		
500	670	620	20 × Ø26	28		
600	780	725	20 × Ø30	30		
700	895	840	24 × Ø30	35		
800	1015	950	24 × Ø33	38		
900	1115	1050	28 × Ø33	38		
1000	1230	1160	28 × Ø36	44		
1200	1455	1380	32 × Ø39	55		
1400	1675	1590	36 × Ø42	65		
1600	1915	1820	40 × Ø48	75		
1800	2115	2020	44 × Ø48	85		
2000	2325	2230	48 × Ø48	90		
2200	2550	2440	52 × Ø56	100		
2400	2760	2650	56 × Ø56	110		

Surface roughness (flange): EN 1092-1 Form B1 (DIN 2526 Form C), Ra 6.3 to 12.5 µm

1) Depends on the liner→ 🖹 81
2) Total length is independent of the process connections. Length according to DVGW (German Technical and Scientific Association for Gas and Water) → 🖹 50 (compact version) → 🖹 53 (remote version)

Flange in accordance with EN 1092-1 (DIN 2501 / DIN 2512N): PN 16
Carbon steel: *order code for "Process connection", option* **D3K**
Stainless steel: *order code for "Process connection", option* **D3S**

DN [mm]	A [mm]	B [mm]	C [mm]	D [mm]	E [mm]	L [mm]
65	185	145	8 × Ø18	20	1)	2)
80	200	160	8 × Ø18	20		
100	220	180	8 × Ø18	22		
125	250	210	8 × Ø18	24		
150	285	240	8 × Ø22	24		
200	340	295	12 × Ø22	26		
250	405	355	12 × Ø26	32		
300	460	410	12 × Ø26	32		
350	520	470	16 × Ø26	30		
400	580	525	16 × Ø30	32		
450	640	585	20 × Ø30	34		
500	715	650	20 × Ø33	36		

Flange in accordance with EN 1092-1 (DIN 2501 / DIN 2512N): PN 16
Carbon steel: *order code for "Process connection", option* **D3K**
Stainless steel: *order code for "Process connection", option* **D3S**

DN [mm]	A [mm]	B [mm]	C [mm]	D [mm]	E [mm]	L [mm]
600	840	770	20 × Ø36	40		
700	910	840	24 × Ø36	40		
800	1025	950	24 × Ø39	41		
900	1125	1050	28 × Ø39	48		
1000	1255	1170	28 × Ø42	59		
1200	1485	1390	32 × Ø48	78		
1400	1685	1590	36 × Ø48	84		
1600	1930	1820	40 × Ø56	102		
1800	2130	2020	44 × Ø56	110		
2000	2345	2230	48 × Ø62	124		

Surface roughness (flange): EN 1092-1 Form B1 (DIN 2526 Form C), Ra 6.3 to 12.5 µm

1) Depends on the liner→ 🖹 81
2) Total length is independent of the process connections. Length according to DVGW (German Technical and Scientific Association for Gas and Water) → 🖹 50 (compact version) → 🖹 53 (remote version)

Flange in accordance with EN 1092-1 (DIN 2501 / DIN 2512N): PN 25
Carbon steel: *order code for "Process connection", option* **D4K**
Stainless steel: *order code for "Process connection", option* **D4S**

DN [mm]	A [mm]	B [mm]	C [mm]	D [mm]	E [mm]	L [mm]
200	360	310	12 × Ø26	32	1)	2)
250	425	370	12 × Ø30	36		
300	485	430	16 × Ø30	40		
350	555	490	16 × Ø33	38		
400	620	550	16 × Ø36	40		
450	670	600	20 × Ø36	46		
500	730	660	20 × Ø36	48		
600	845	770	20 × Ø39	48		
700	960	875	24 × Ø42	50		
800	1085	990	24 × Ø48	53		
900	1185	1090	28 × Ø48	57		
1000	1320	1210	28 × Ø56	63		

Surface roughness (flange): EN 1092-1 Form B1 (DIN 2526 Form C), Ra 6.3 to 12.5 µm

1) Depends on the liner→ 🖹 81
2) Total length is independent of the process connections. Length according to DVGW (German Technical and Scientific Association for Gas and Water) → 🖹 50 (compact version) → 🖹 53 (remote version)

Flange in accordance with EN 1092-1 (DIN 2501 / DIN 2512N): PN 40
Carbon steel: *order code for "Process connection", option* **D5K**
Stainless steel: *order code for "Process connection", option* **D5S**

DN [mm]	A [mm]	B [mm]	C [mm]	D [mm]	E [mm]	L [mm]
25	115	85	4 × Ø14	16	1)	2)
32	140	100	4 × Ø18	18		
40	150	110	4 × Ø18	18		
50	165	125	4 × Ø18	20		
65	185	145	8 × Ø18	24		
80	200	160	8 × Ø18	26		
100	235	190	8 × Ø22	26		
125	270	220	8 × Ø26	28		
150	300	250	8 × Ø26	30		
Surface roughness (flange): EN 1092-1 Form B1 (DIN 2526 Form C), Ra 6.3 to 12.5 µm						

1) Depends on the liner→ 🖹 81
2) Total length is independent of the process connections. Length according to DVGW (German Technical and Scientific Association for Gas and Water) → 🖹 50 (compact version) → 🖹 53 (remote version)

Flange according to ASME B16.5, Class 150
Carbon steel: *order code for "Process connection", option* **A1K**
Stainless steel: *order code for "Process connection", option* **A1S**

DN		A	B	C	D	E	L
[mm]	[in]	[mm]	[mm]	[mm]	[mm]	[mm]	[mm]
25	1	108	79.2	4 × Ø16	12.6	1)	2)
40	1 ½	127	98.6	4 × Ø16	15.9		
50	2	152.4	120.7	4 × Ø19.1	17.5		
80	3	190.5	152.4	4 × Ø19.1	22.3		
100	4	228.6	190.5	8 × Ø19.1	22.3		
150	6	279.4	241.3	8 × Ø22.4	23.8		
200	8	342.9	298.5	8 × Ø22.4	26.8		
250	10	406.4	362	12 × Ø25.4	29.6		
300	12	482.6	431.8	12 × Ø25.4	30.2		
350	14	535	476.3	12 × Ø28.6	35.4		
400	16	595	539.8	16 × Ø28.6	37		
450	18	635	577.9	16 × Ø31.8	40.1		
500	20	700	635	20 × Ø31.8	43.3		
600	24	815	749.3	20 × Ø34.9	48.1		
Surface roughness (flange): Ra 6.3 to 12.5 µm							

1) Depends on the liner→ 🖹 81
2) Total length is independent of the process connections. Length according to DVGW (German Technical and Scientific Association for Gas and Water) → 🖹 50 (compact version) → 🖹 53 (remote version)

Flange according to ASME B16.5, Class 300
Carbon steel: *order code for "Process connection", option* **A2K**
Stainless steel: *order code for "Process connection", option* **A2S**

DN		A	B	C	D	E	L
[mm]	[in]	[mm]	[mm]	[mm]	[mm]	[mm]	[mm]
25	1	123.9	88.9	4 × Ø19.1	15.9	1)	2)
40	1 ½	155.4	114.3	4 × Ø22.4	19		
50	2	165.1	127	8 × Ø19.1	20.8		
80	3	209.6	168.1	8 × Ø22.4	26.8		
100	4	254	200.2	8 × Ø22.4	30.2		
150	6	317.5	269.7	12 × Ø22.4	35		
Surface roughness (flange): Ra 6.3 to 12.5 µm							

1) Depends on the liner→ 🖹 81
2) Total length is independent of the process connections. Length according to DVGW (German Technical and Scientific Association for Gas and Water) → 🖹 50 (compact version) → 🖹 53 (remote version)

Flange according to JIS B2220, 10K
Carbon steel: *order code for "Process connection", option* **N3K**
Stainless steel: *order code for "Process connection", option* **N3S**

DN [mm]	A [mm]	B [mm]	C [mm]	D [mm]	E [mm]	L [mm]
50	155	120	4 × Ø19	16	1)	2)
65	175	140	4 × Ø19	18		
80	185	150	8 × Ø19	18		
100	210	175	8 × Ø19	18		
125	250	210	8 × Ø23	20		
150	280	240	8 × Ø23	22		
200	330	290	12 × Ø23	22		
250	400	355	12 × Ø25	24		
300	445	400	16 × Ø25	24		
Surface roughness (flange): Ra 6.3 to 12.5 µm						

1) Depends on the liner→ 🖹 81
2) Total length is independent of the process connections. Length according to DVGW (German Technical and Scientific Association for Gas and Water) → 🖹 50 (compact version) → 🖹 53 (remote version)

Flange according to JIS B2220, 20K
Carbon steel: *order code for "Process connection", option* **N4K**
Stainless steel: *order code for "Process connection", option* **N4S**

DN [mm]	A [mm]	B [mm]	C [mm]	D [mm]	E [mm]	L [mm]
25	125	90	4 × Ø19	16	1)	2)
32	135	100	4 × Ø19	18		
40	140	105	4 × Ø19	18		
50	155	120	8 × Ø19	18		
65	175	140	8 × Ø19	20		
80	200	160	8 × Ø23	22		
100	225	185	8 × Ø23	24		

Flange according to JIS B2220, 20K
Carbon steel: *order code for "Process connection", option* **N4K**
Stainless steel: *order code for "Process connection", option* **N4S**

DN [mm]	A [mm]	B [mm]	C [mm]	D [mm]	E [mm]	L [mm]
125	270	225	8 × Ø25	26		
150	305	260	12 × Ø25	28		
200	350	305	12 × Ø25	30		
250	430	380	12 × Ø27	34		
300	480	430	16 × Ø27	36		
Surface roughness (flange): Ra 6.3 to 12.5 µm						

1) Depends on the liner→ 🖹 81
2) Total length is independent of the process connections. Length according to DVGW (German Technical and Scientific Association for Gas and Water) → 🖹 50 (compact version) → 🖹 53 (remote version)

Flange according to AWWA, Class D
Order code for "Process connection", option **W1K**

DN		A	B	C	D	E	L
[mm]	[in]	[mm]	[mm]	[mm]	[mm]	[mm]	[mm]
700	28	927	863.6	28 × Ø35	33.4	1)	2)
750	30	984	914.4	28 × Ø35	35		
800	32	1060	977.9	28 × Ø42	38.1		
900	36	1168	1085.9	32 × Ø42	41.3		
1000	40	1289	1200.2	36 × Ø42	41.3		
–	42	1346	1257.3	36 × Ø42	44.5		
1200	48	1511	1422.4	44 × Ø42	47.7		
–	54	1683	1593.9	44 × Ø48	54		
–	60	1855	1759	52 × Ø48	57.2		
–	66	2032	1930.4	52 × Ø48	63.5		
1800	72	2197	2095.5	60 × Ø48	66.7		
–	78	2362	2260.6	64 × Ø54	69.9		
–	84	2535	2425.7	64 × Ø54	73.1		
–	90	2705	2717.8	68 × Ø60	76.2		
Surface roughness (flange): Ra 6.3 to 12.5 µm							

1) Depends on the liner→ 🖹 81
2) Total length is independent of the process connections. Length according to DVGW (German Technical and Scientific Association for Gas and Water) → 🖹 50 (compact version) → 🖹 53 (remote version)

Flange according to AS 2129, Tab. E
Order code for "Process connection", option **M2K**

DN [mm]	A [mm]	B [mm]	C [mm]	D [mm]	E [mm]	L [mm]
80	185	146	4 × Ø18	12	1)	2)
100	215	178	8 × Ø18	13		
150	280	235	8 × Ø22	17		
200	335	292	8 × Ø22	19		
250	405	356	12 × Ø22	22		

Flange according to AS 2129, Tab. E *Order code for "Process connection", option* **M2K**						
DN [mm]	**A [mm]**	**B [mm]**	**C [mm]**	**D [mm]**	**E [mm]**	**L [mm]**
300	455	406	12 × Ø26	25		
350	525	470	12 × Ø26	30		
400	580	521	12 × Ø26	32		
450	640	584	16 × Ø26	35		
500	705	641	16 × Ø26	38		
600	825	756	16 × Ø33	48		
700	910	845	20 × Ø33	51		
750	995	927	20 × Ø36	54		
800	1060	984	20 × Ø36	54		
900	1175	1092	24 × Ø36	64		
1000	1255	1175	24 × Ø39	67		
1200	1490	1410	32 × Ø39	79		
Surface roughness (flange): Ra 6.3 to 12.5 µm						

1) Depends on the liner→ 🖹 81
2) Total length is independent of the process connections. Length according to DVGW (German Technical and Scientific Association for Gas and Water) → 🖹 50 (compact version) → 🖹 53 (remote version)

Flange according to AS 4087, PN 16 *Order code for "Process connection", option* **M3K**						
DN [mm]	**A [mm]**	**B [mm]**	**C [mm]**	**D [mm]**	**E [mm]**	**L [mm]**
80	185	146	4 × Ø18	12	1)	2)
100	215	178	4 × Ø18	13		
150	280	235	8 × Ø18	13		
200	335	292	8 × Ø18	19		
250	405	356	8 × Ø22	19		
300	455	406	12 × Ø22	23		
350	525	470	12 × Ø26	30		
375	550	495	12 × Ø26	30		
400	580	521	12 × Ø26	32		
450	640	584	12 × Ø26	30		
500	705	641	16 × Ø26	38		
600	825	756	16 × Ø30	48		
700	910	845	20 × Ø30	56		
750	995	927	20 × Ø33	56		
800	1060	984	20 × Ø36	56		
900	1175	1092	24 × Ø36	66		
1000	1255	1175	24 × Ø36	66		

Flange according to AS 4087, PN 16 *Order code for "Process connection", option* **M3K**						
DN [mm]	**A [mm]**	**B [mm]**	**C [mm]**	**D [mm]**	**E [mm]**	**L [mm]**
1200	1 490	1 410	32 × Ø36	76		
Surface roughness (flange): Ra 6.3 to 12.5 µm						

1) Depends on the liner→ 🖹 81
2) Total length is independent of the process connections. Length according to DVGW (German Technical and Scientific Association for Gas and Water) → 🖹 50 (compact version) → 🖹 53 (remote version)

Lap joint flange

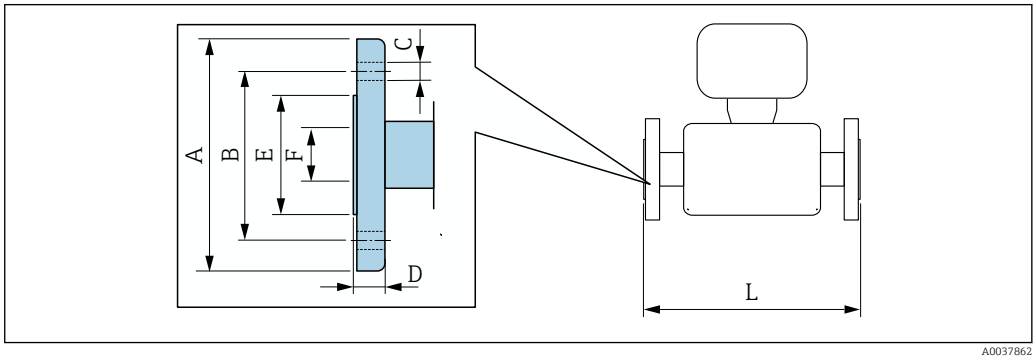

A0037862

Lap joint flange in accordance with EN 1092-1 (DIN 2501 / DIN 2512N): PN 10 **Carbon steel:** *order code for "Process connection", option* **D22** **Stainless steel:** *order code for "Process connection", option* **D24**								
DN		**A**	**B**	**C**	**D**	**E**	**F**	**L**
[mm]	**[in]**	**[mm]**	**[mm]**	**[mm]**	**[mm]**	**[mm]**	**[mm]**	**[mm]**
200	8	340	295	8 × Ø22	24	264	1)	2)
250	10	395	350	12 × Ø22	26	317		
300	12	445	400	12 × Ø22	26	367		
Surface roughness (flange): Ra 6.3 to 12.5 µm								

1) Depends on the liner→ 🖹 81
2) Total length is independent of the process connections. Length according to DVGW (German Technical and Scientific Association for Gas and Water) → 🖹 50 (compact version) → 🖹 53 (remote version)

Lap joint flange in accordance with EN 1092-1 (DIN 2501 / DIN 2512N): PN 16 **Carbon steel:** *order code for "Process connection", option* **D32** **Stainless steel:** *order code for "Process connection", option* **D34**								
DN		**A**	**B**	**C**	**D**	**E**	**F**	**L**
[mm]	**[in]**	**[mm]**	**[mm]**	**[mm]**	**[mm]**	**[mm]**	**[mm]**	**[mm]**
25	1	115	85	4 × Ø14	16	49	1)	2)
32	-	140	100	4 × Ø18	18	65		
40	1 ½	150	110	4 × Ø18	18	71		
50	2	165	125	4 × Ø18	20	88		
65	-	185	145	8 × Ø18	20	103		
80	3	200	160	8 × Ø18	20	120		
100	4	220	180	8 × Ø18	22	148		
125	-	250	210	8 × Ø18	22	177		

Lap joint flange in accordance with EN 1092-1 (DIN 2501 / DIN 2512N): PN 16 **Carbon steel:** *order code for "Process connection", option* **D32** **Stainless steel:** *order code for "Process connection", option* **D34**								
DN		**A**	**B**	**C**	**D**	**E**	**F**	**L**
[mm]	**[in]**	**[mm]**	**[mm]**	**[mm]**	**[mm]**	**[mm]**	**[mm]**	**[mm]**
150	6	285	240	8 × Ø22	24	209		
200	8	340	295	12 × Ø22	26	264		
250	10	405	355	12 × Ø26	29	317		
300	12	460	410	12 × Ø26	32	367		
Surface roughness (flange): Ra 6.3 to 12.5 µm								

1) Depends on the liner→ 🖹 81
2) Total length is independent of the process connections. Length according to DVGW (German Technical and Scientific Association for Gas and Water) → 🖹 50 (compact version) → 🖹 53 (remote version)

Lap joint flange according to ASME B16.5, Class 150 **Carbon steel:** *order code for "Process connection", option* **A12** **Stainless steel:** *order code for "Process connection", option* **A14**								
DN		**A**	**B**	**C**	**D**	**E**	**F**	**L**
[mm]	**[in]**	**[mm]**	**[mm]**	**[mm]**	**[mm]**	**[mm]**	**[mm]**	**[mm]**
25	1	110	80	4 × Ø16	14	49	1)	2)
40	1 ½	125	98	4 × Ø16	17.5	71		
50	2	150	121	4 × Ø19	19	88		
80	3	190	152	4 × Ø19	24	120		
100	4	230	190	8 × Ø19	24	148		
150	6	280	241	8 × Ø23	25	209		
200	8	345	298	8 × Ø23	29	264		
250	10	405	362	12 × Ø25	30	317		
300	12	485	432	12 × Ø25	32	378		
Surface roughness (flange): Ra 6.3 to 12.5 µm								

1) Depends on the liner→ 🖹 81
2) Total length is independent of the process connections. Length according to DVGW (German Technical and Scientific Association for Gas and Water) → 🖹 50 (compact version) → 🖹 53 (remote version)

Lap joint flange, stamped plate

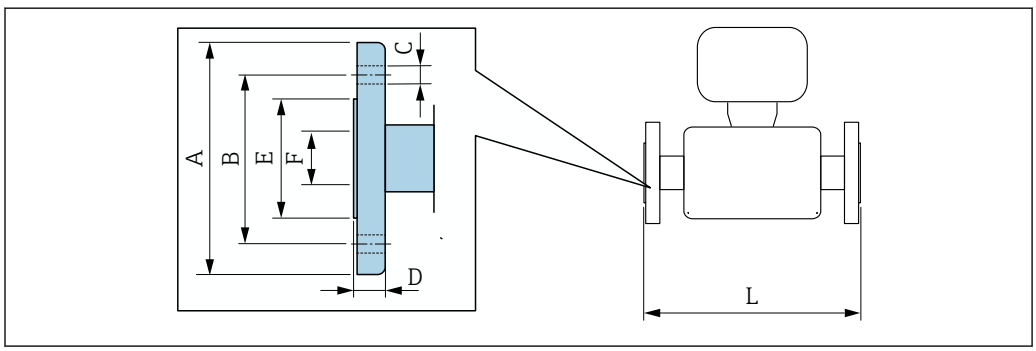

A0037862

Lap joint flange, stamped plate in accordance with EN 1092-1 (DIN 2501 / DIN 2512N): PN 10 **Carbon steel:** *order code for "Process connection", option* **D21** **Stainless steel:** *order code for "Process connection", option* **D23**							
DN **[mm]**	**A** **[mm]**	**B** **[mm]**	**C** **[mm]**	**D** **[mm]**	**E** **[mm]**	**F** **[mm]**	**L** **[mm]**
25	115	85	4 x Ø13.5	16.5	49	1)	2)
32	140	100	4 x Ø17.5	17	65		
40	150	110	4 x Ø17.5	16.5	71		
50	165	125	4 x Ø17.5	18.5	88		
65	185	145	4 x Ø17.5	20	103		
80	200	160	8 x Ø17.5	23.5	120		
100	220	180	8 x Ø17.5	24.5	148		
125	250	210	8 x Ø17.5	24	177		
150	285	240	8 x Ø21.5	25	209		
200	340	295	8 x Ø21.5	27.5	264		
250	405	350	12 x Ø21.5	30.5	317		
300	445	400	12 x Ø21.5	34.5	367		
Surface roughness (flange): Ra 6.3 to 12.5 µm							

1) Depends on the liner→ 🖹 81
2) Total length is independent of the process connections. Length according to DVGW (German Technical and Scientific Association for Gas and Water) → 🖹 50 (compact version) → 🖹 53 (remote version)

Accessories

Ground disks for flange connections

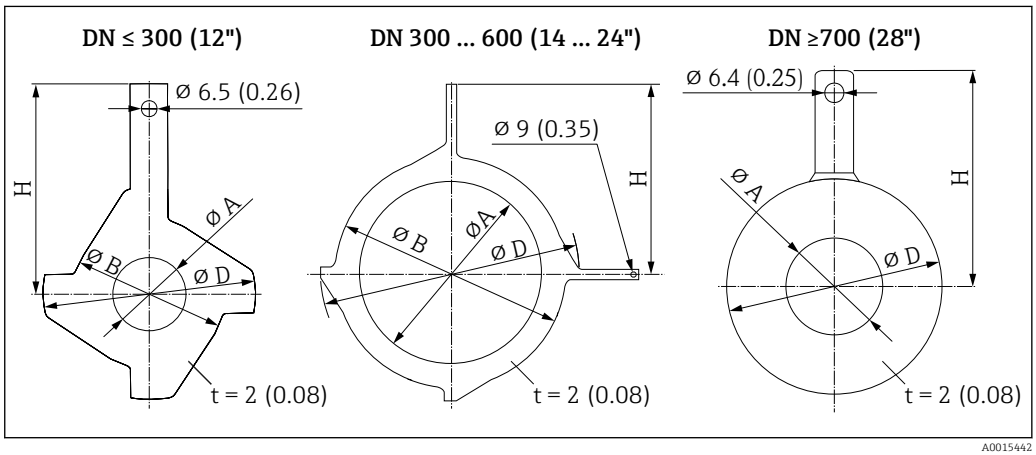

DN		**Pressure rating**	**A**		**B**		**D**		**H**	
[mm]	**[inch]**		**[mm]**	**[inch]**	**[mm]**	**[inch]**	**[mm]**	**[inch]**	**[mm]**	**[inch]**
25	1"	1)	26	1.02	62	2.44	77.5	3.05	87.5	3.44
32	1 ¼"	1)	35	1.38	80	3.15	87.5	3.44	94.5	3.72
40	1 ½"	1)	41	1.61	82	3.23	101	3.98	103	4.06
50	2"	1)	52	2.05	101	3.98	115.5	4.55	108	4.25
65	2 ½"	1)	68	2.68	121	4.76	131.5	5.18	118	4.65
80	3"	1)	80	3.15	131	5.16	154.5	6.08	135	5.31

DN		Pressure rating	A		B		D		H	
[mm]	[inch]		[mm]	[inch]	[mm]	[inch]	[mm]	[inch]	[mm]	[inch]
100	4"	1)	104	4.09	156	6.14	186.5	7.34	153	6.02
125	5"	1)	130	5.12	187	7.36	206.5	8.13	160	6.30
150	6"	1)	158	6.22	217	8.54	256	10.08	184	7.24
200	8"	1)	206	8.11	267	10.51	288	11.34	205	8.07
250	10"	1)	260	10.24	328	12.91	359	14.13	240	9.45
300	12"	PN 10 PN 16 Cl. 150	312	12.28	375	14.76	413	16.26	273	10.75
		PN 25 JIS 10K JIS 20K	310	12.20	375	14.76	404	15.91	268	10.55
350	14"	PN 6	343	13.50	420	16.54	479	18.86	365	14.37
		PN 10								
		PN 16								
375	15"	PN 16	393	15.5	461	18.2	523	20.6	395	15.6
400	16"	PN 6	393	15.5	470	18.50	542	21.34	395	15.55
		PN 10								
		PN 16								
450	18"	PN 6	439	17.28	525	20.67	583	22.95	417	16.42
		PN 10								
		PN 16								
500	20"	PN 6	493	19.41	575	22.64	650	25.59	460	18.11
		PN 10								
		PN 16								
600	24"	PN 6	593	23.35	676	26.61	766	30.16	522	20.55
		PN 10								
		PN 16								
700	28"	PN 6	697	27.44	–	–	786	30.94	460	18.11
		PN10	693	27.28	–	–	813	32.01	480	18.9
		PN16	687	27.05	–	–	807	31.77	490	19.29
		Cl, D	693	27.28	–	–	832	32.76	494	19.45
750	30"	Cl, D	743	29.25	–	–	833	32.8	523	20.59
800	32"	PN 6	799	31.46	–	–	893	35.16	520	20.47
		PN 10	795	31.3	–	–	920	36.22	540	21.26
		PN 16	789	31.06	–	–	914	35.98	550	21.65
		Cl, D	795	31.3	–	–	940	37.01	561	22.09
900	36"	PN 6	897	35.31	–	–	993	39.09	570	22.44
		PN 10	893	35.16	–	–	1020	40.16	590	23.23
		PN 16	886	34.88	–	–	1014	39.92	595	23.43
		Cl, D	893	35.16	–	–	1048	41.26	615	24.21
1000	40"	PN 6	999	39.33	–	–	1093	43.03	620	24.41
		PN 10	995	39.17	–	–	1127	44.37	650	25.59
		PN 16	988	38.9	–	–	1131	44.53	660	25.98

DN		Pressure rating	A		B		D		H	
[mm]	[inch]		[mm]	[inch]	[mm]	[inch]	[mm]	[inch]	[mm]	[inch]
		Cl, D	995	39.17	–	–	1163	45.79	675	26.57
–	42"	PN 6	1044	41.1	–	–	1220	48.03	704	27.72
1200	48"	PN 6	1203	47.36	–	–	1310	51.57	733	28.86
		PN 10	1196	47.09	–	–	1344	52.91	760	29.92
		PN 16	1196	47.09	–	–	1385	54.53	786	30.94
		Cl, D	1188	46.77	–	–	1345	52.95	775	30.51

1) In the case of DN 25 to 250, ground disks can be used for all the flange standards/pressure ratings which can be supplied in the standard version

Dimensions in US units

Compact version

Order code for "Housing", option A "Compact, aluminum, coated" or option M "Compact, polycarbonate"

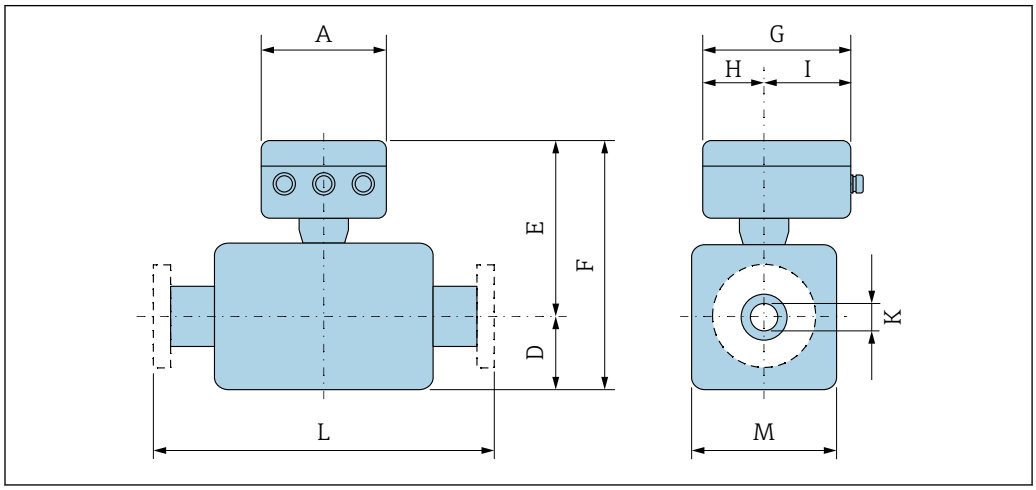

A0033790

A [in]	G 1) [in]	H [in]	I 1) [in]
6.57	7.60	3.54	4.06

1) Depending on the cable gland used: values up to + 1.18 in

DN 25 to 300 (1 to 12"): sensor with aluminum half-shell housing

DN		Order code for "Design"								K	L
		Options A, D, E, H, I				Option C					
		D 1)	E 1) 2)	F 1) 2)	M 1)	D 1)	E 1) 2)	F 1) 2)	M 1)		
[mm]	[in]	[in]	[in]	[in]	[in]	[in]	[in]	[in]	[in]	[in]	[in]
25	1	3.31	7.91	11.22	4.72	–	–	–	–	3)	7.87
32	–	3.31	7.91	11.22	4.72	–	–	–	–	3)	7.87
40	1 ½	3.31	7.91	11.22	4.72	–	–	–	–	3)	7.87
50	2	3.31	7.91	11.22	4.72	3.31	7.91	11.22	4.72	3)	7.87
65	–	4.29	8.9	13.19	7.09	3.31	7.91	11.22	4.72	3)	7.87
80	3	4.29	8.9	13.19	7.09	3.31	7.91	11.22	4.72	3)	7.87
100	4	4.29	8.9	13.19	7.09	4.29	8.9	13.19	7.09	3)	9.84
125	–	5.91	10.47	16.38	10.24	4.29	8.9	13.19	7.09	3)	9.84
150	6	5.91	10.47	16.38	10.24	4.29	8.9	13.19	7.09	3)	11.81
200	8	7.09	11.46	18.54	12.76	5.91	10.47	16.38	10.24	3)	13.78
250	10	8.07	12.44	20.51	15.75	5.91	10.47	16.38	10.24	3)	17.72
300	12	9.06	13.43	22.48	18.11	7.09	11.46	18.54	12.76	3)	19.69

1) The dimensions are reference values. They may vary depending on the pressure rating, design and order option.
2) With order code for "Sensor option", option CG "Sensor extended neck for insulation": values + 4.33 in
3) Depends on the liner→ 🖹 81

DN 350 to 900 (14 to 36")

DN		Order code for "Design"										
		Options A, E, F				Option B, G				K	L	
		D [1]	E [1) 2)]	F [1) 2)]	M [1)]	D [1)]	E [1) 2)]	F [1) 2)]	M [1)]			
[mm]	[in]	[mm]	[mm]	[mm]	[mm]	[mm]	[mm]	[mm]	[mm]	[mm]	[mm]	
350	14	9.65	16.2	25.91	19.29	–	–	–	–	[3)]	21.65	
375	15	10.67	17.24	27.91	21.34	–	–	–	–	[3)]	21.65	
400	16	10.67	17.24	27.91	21.34	–	–	–	–	[3)]	23.62	
450	18	11.77	18.35	30.12	23.54	13.11	17.72	30.83	26.22	[3)]	23.62 [4)]	25.59 [5)]
500	20	12.76	19.33	32.09	25.51	14.13	18.7	32.83	28.23	[3)]	23.62 [4)]	25.59 [5)]
600	24	14.37	21.34	35.71	28.74	16.18	20.79	36.97	32.32	[3)]	23.62 [4)]	30.71 [5)]
700	28	16.93	23.74	40.67	33.86	20.16	24.8	44.96	40.31	[3)]	27.56 [4)]	35.83 [5)]
750	30	18.39	25.24	43.62	36.77	20.16	24.8	44.96	40.31	[3)]	27.56 [4)]	35.83 [5)]
800	32	19.13	25.98	45.12	38.27	21.02	25.59	46.61	41.93	[3)]	31.5 [4)]	40.94 [5)]
900	36	21.1	27.95	49.06	42.2	24.02	28.62	52.64	47.95	[3)]	35.43 [4)]	46.06 [5)]

1) The dimensions are reference values. They may be different than indicated, depending on the pressure rating, design and order code.
2) With order code for "Sensor option", option CG "Sensor extended neck for insulation": values + 110 mm
3) Depends on the liner→ 🖹 81
4) Order code for "Design", option F "Fixed flange, short installation length"
5) Order code for "Design", option G "Fixed flange, long installation length"

DN 1000 to 2400 (40 to 90")

DN		D [1)]	E [1) 2)]	F [1) 2)]	K	L		M [1)]
[mm]	[in]	[in]	[in]	[in]	[in]	[in]		[in]
1000	40	27.01	31.61	58.62	[3)]	39.37 [4)]	51.18 [5)]	53.94
–	42	28.03	32.6	60.63	[3)]	41.34 [4)]	53.74 [5)]	55.91
1200	48	31.93	36.57	68.5	[3)]	47.24 [4)]	61.42 [5)]	63.78
–	54	35.91	40.51	76.42	[3)]	53.15 [4)]	69.09 [5)]	71.65
1400	–	38.86	43.46	82.32	[3)]	55.12 [4)]	71.65 [5)]	77.56
–	60	39.8	44.41	84.21	[3)]	59.06 [4)]	76.77 [5)]	79.45
1600	–	41.57	46.18	87.76	[3)]	62.99 [4)]	81.89 [5)]	82.99
–	66	43.03	47.6	90.63	[3)]	64.96 [4)]	84.45 [5)]	85.83
1800	72	46.77	51.34	98.11	[3)]	70.87 [4)]	92.13 [5)]	93.31
–	78	48.74	53.31	102.05	[3)]	78.74 [4)]	102.36 [5)]	97.24
2000	–	48.74	53.31	102.05	[3)]	78.74 [4)]	102.36 [5)]	97.24
–	84	48.74	53.31	102.05	[3)]	86.61 [4)]		97.24
2200	–	48.31	52.99	101.3	[3)]	86.61 [4)]		96.61
–	90	48.31	52.99	101.3	[3)]	94.49 [4)]		96.61
2400	–	52.44	57.13	109.57	[3)]	94.49 [4)]		104.88

1) The dimensions are reference values. They may be different than indicated, depending on the pressure rating, design and order code.
2) With order code for "Sensor option", option CG "Sensor extended neck for insulation": values + 4.33 in
3) Depends on the liner→ 🖹 81
4) Order code for "Design", option F "Fixed flange, short installation length"
5) Order code for "Design", option G "Fixed flange, long installation length"

Remote version

Transmitter remote version

Order code for "Housing", option N "Remote, polycarbonate" or option P "Remote, aluminum coated"

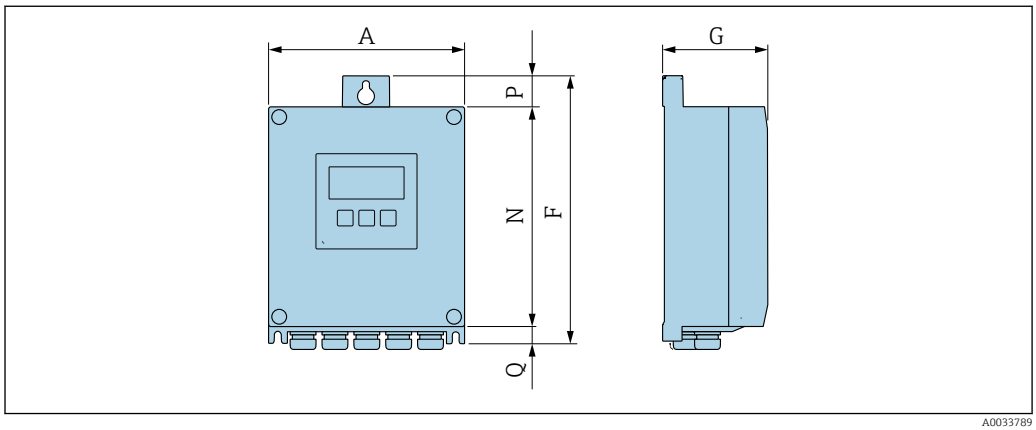

A [in]	F [in]	G [in]	N [in]	P [in]	Q [in]
6.57	9.13	3.15	7.36	0.94	0.83

Sensor connection housing

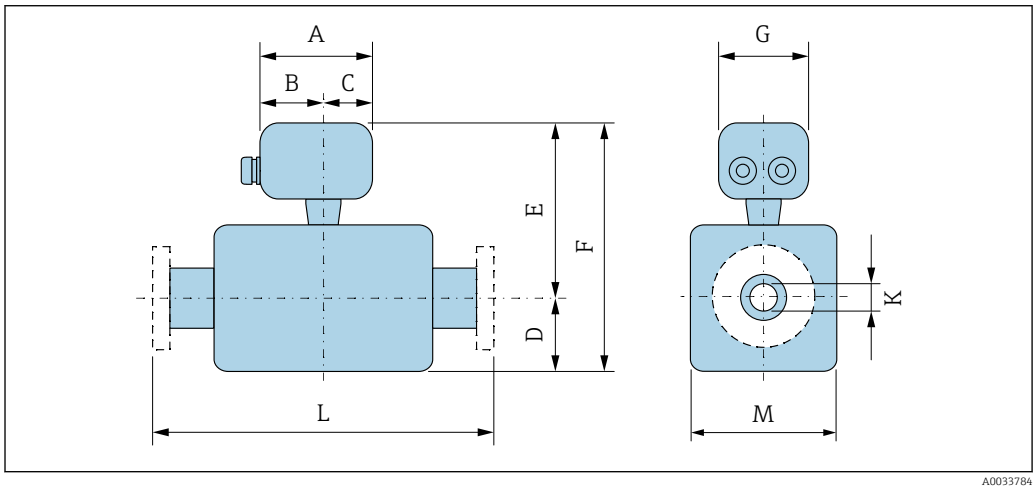

Aluminum, coated

A [in]	B [in]	C [in]	G [in]
5.83	3.7	2.13	5.35

Polycarbonate (only in conjunction with order code for "Sensor option", options CA...CE)

A [in]	B [in]	C [in]	G [in]
4.45	2.44	2.01	4.41

DN 25 to 300 (1 to 12"): sensor with aluminum half-shell housing

DN		Order code for "Design"								K	L
		Options A, D, E, H, I				Option C					
		D [1]	E [1]	F [1]	M [1]	D [1]	E [1]	F [1]	M [1]		
[mm]	[in]	[in]	[in]	[in]	[in]	[in]	[in]	[in]	[in]	[in]	[in]
25	1	3.31	7.87	11.18	4.72	–	–	–	–	[2]	7.87
32	–	3.31	7.87	11.18	4.72	–	–	–	–	[2]	7.87
40	1 ½	3.31	7.87	11.18	4.72	–	–	–	–	[2]	7.87
50	2	3.31	7.87	11.18	4.72	3.31	7.87	11.18	4.72	[2]	7.87
65	–	4.29	8.86	13.15	7.09	3.31	7.87	11.18	4.72	[2]	7.87
80	3	4.29	8.86	13.15	7.09	3.31	7.87	11.18	4.72	[2]	7.87
100	4	4.29	8.86	13.15	7.09	4.29	8.86	13.15	7.09	[2]	9.84
125	–	5.91	10.43	16.34	10.24	4.29	8.86	13.15	7.09	[2]	9.84
150	6	5.91	10.43	16.34	10.24	4.29	8.86	13.15	7.09	[2]	11.81
200	8	7.09	11.42	18.5	12.76	5.91	10.43	16.34	10.24	[2]	13.78
250	10	8.07	12.4	20.47	15.75	5.91	10.43	16.34	10.24	[2]	17.72
300	12	9.06	13.39	22.44	18.11	7.09	11.42	18.5	12.76	[2]	19.69

1) The dimensions are reference values. They may vary depending on the pressure rating, design and order option.
2) Depends on the liner→ 🖹 81

DN 25 to 300 (1 to 12"): sensor with fully welded carbon steel housing

DN		Order code for "Design"								K	L
		Options A, E				Option C					
		D [1]	E [1]	F [1]	M [1]	D [1]	E [1]	F [1]	M [1]		
[mm]	[in]	[mm]	[in]	[in]	[in]	[in]	[in]	[in]	[in]	[in]	[in]
25	1	2.76	7.87	10.63	5.51	–	–	–	–	[2]	7.87
32	–	2.76	7.87	10.63	5.51	–	–	–	–	[2]	7.87
40	1 ½	2.76	7.87	10.63	5.51	–	–	–	–	[2]	7.87
50	2	2.76	7.87	10.63	5.51	2.76	7.87	10.63	5.51	[2]	7.87
65	–	3.23	8.86	12.09	6.5	2.76	7.87	10.63	5.51	[2]	7.87
80	3	3.43	8.86	12.28	6.89	2.76	7.87	10.63	5.51	[2]	7.87
100	4	3.94	8.86	12.8	7.87	3.23	8.86	12.09	6.5	[2]	9.84
125	–	4.45	10.43	14.88	8.9	3.43	8.86	12.28	6.89	[2]	9.84
150	6	5.28	10.43	15.71	10.59	3.94	8.86	12.8	7.87	[2]	11.81
200	8	6.3	11.42	17.72	12.6	4.45	10.43	14.88	8.9	[2]	13.78
250	10	7.6	12.4	20	15.24	5.28	10.43	15.71	10.59	[2]	17.72
300	12	8.58	13.39	21.97	17.2	6.3	11.42	17.72	12.6	[2]	19.69

1) The dimensions are reference values. They may vary depending on the pressure rating, design and order option.
2) Depends on the liner→ 🖹 81

DN 350 to 900 (14 to 36")

DN		Order code for "Design"								K	L	
		Options A, E, F				Option B, G						
		D [1]	E [1]	F [1]	M [1]	D [1]	E [1]	F [1]	M [1]			
[mm]	[in]	[in]	[in]	[in]	[in]	[in]	[in]	[in]	[in]	[in]	[in]	
350	14	9.65	13.78	23.43	19.29	–	–	–	–	[2]	21.65	
375	15	10.67	14.76	25.43	21.34	–	–	–	–	[2]	21.65	
400	16	10.67	14.76	25.43	21.34	–	–	–	–	[2]	23.62	
450	18	11.77	15.87	27.64	23.54	13.11	17.6	30.71	26.22	[2]	23.62 [3]	25.59 [4]
500	20	12.76	16.85	29.61	25.51	14.13	18.58	32.72	28.23	[2]	23.62 [3]	25.59 [4]
600	24	14.37	18.86	33.23	28.74	16.18	20.67	36.85	32.32	[2]	23.62 [3]	30.71 [4]
700	28	16.93	21.26	38.19	33.86	20.16	24.69	44.84	40.31	[2]	27.56 [3]	35.83 [4]
750	30	18.39	22.76	41.14	36.77	20.16	24.69	44.84	40.31	[2]	27.56 [3]	35.83 [4]
800	32	19.13	23.5	42.64	38.27	21.02	25.47	46.5	41.93	[2]	31.5 [3]	40.94 [4]
900	36	21.1	25.47	46.57	42.2	24.02	28.5	52.52	47.95	[2]	35.43 [3]	46.06 [4]

1) The dimensions are reference values. They may vary depending on the pressure rating, design and order option.
2) Depends on the liner→ 🖹 81
3) Order code for "Design", option F "Fixed flange, short installation length"
4) Order code for "Design", option G "Fixed flange, long installation length"

1000 ... 2400 (40 ... 90")

DN		D [1]	E [1]	F [1]	K	L		M [1]
[mm]	[in]	[in]	[in]	[in]	[in]	[in]		[in]
1000	40	27.01	31.5	58.5	[2]	39.37 [3]	51.18 [4]	53.94
–	42	28.03	32.48	60.51	[2]	41.34 [3]	53.74 [4]	55.91
1200	48	31.93	36.46	68.39	[2]	47.24 [3]	61.42 [4]	63.78
–	54	35.91	40.39	76.3	[2]	53.15 [3]	69.09 [4]	71.65
1400	–	38.86	43.35	82.2	[2]	55.12 [3]	71.65 [4]	77.56
–	60	39.8	44.29	84.09	[2]	59.06 [3]	76.77 [4]	79.45
1600	–	41.57	46.06	87.64	[2]	62.99 [3]	81.89 [4]	82.99
–	66	43.03	47.48	90.51	[2]	64.96 [3]	84.45 [4]	85.83
1800	72	46.77	51.22	97.99	[2]	70.87 [3]	92.13 [4]	93.31
–	78	48.74	53.19	101.93	[2]	78.74 [3]	102.36 [4]	97.24
2000	–	48.74	53.19	101.93	[2]	78.74 [3]	102.36 [4]	97.24
–	84	48.74	53.19	101.93	[2]	86.61 [3]		97.24
2200	–	48.31	52.87	101.18	[2]	86.61 [3]		96.61
–	90	48.31	52.87	101.18	[2]	94.49 [3]		96.61
2400	–	52.44	57.01	109.45	[2]	94.49 [3]		104.88

1) The dimensions are reference values. They may be different than indicated, depending on the pressure rating, design and order code.
2) Internal diameter depends on liner, see measuring tube specification → 🖹 81
3) Order code for "Design", option F "Fixed flange, short installation length"
4) Order code for "Design", option G "Fixed flange, long installation length"

Flange connections

Fixed flange

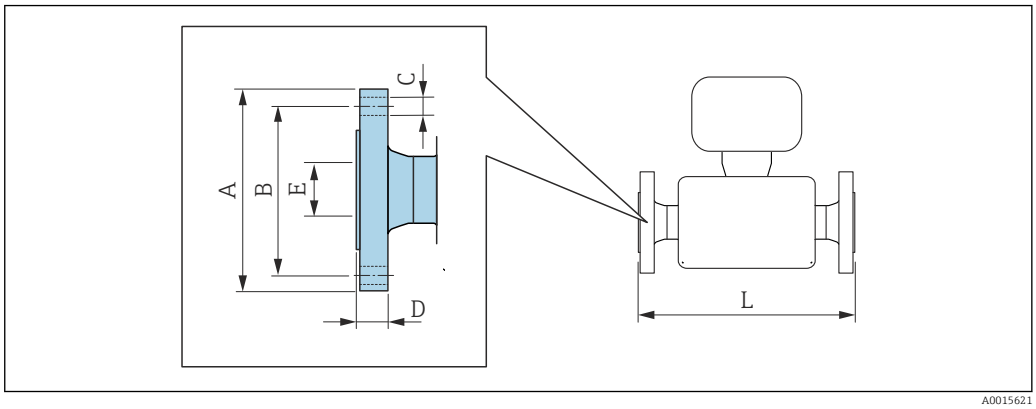

A0015621

Flange according to ASME B16.5, Class 150 **Carbon steel:** *order code for "Process connection", option* **A1K** **Stainless steel:** *order code for "Process connection", option* **A1S**							
DN		**A**	**B**	**C**	**D**	**E**	**L**
[mm]	**[in]**	**[in]**	**[in]**	**[in]**	**[in]**	**[in]**	**[in]**
25	1	4.25	3.12	4 × Ø0.63	0.5	1)	2)
40	1 ½	5	3.88	4 × Ø0.63	0.63		
50	2	6	4.75	4 × Ø0.75	0.69		
80	3	7.5	6	4 × Ø0.75	0.88		
100	4	9	7.5	8 × Ø0.75	0.88		
150	6	11	9.5	8 × Ø0.88	0.94		
200	8	13.5	11.75	8 × Ø0.88	1.06		
250	10	16	14.25	12 × Ø1	1.17		
300	12	19	17	12 × Ø1	1.19		
350	14	21.06	18.75	12 × Ø1.13	1.39		
400	16	23.43	21.25	16 × Ø1.13	1.46		
450	18	25	22.75	16 × Ø1.25	1.58		
500	20	27.56	25	20 × Ø1.25	1.7		
600	24	32.09	29.5	20 × Ø1.37	1.89		
Surface roughness (flange): Ra 250 to 492 µm							

1) Depends on the liner→ 🖹 81
2) Total length is independent of the process connections. Length according to DVGW (German Technical and Scientific Association for Gas and Water) → 🖹 68 (compact version) → 🖹 70 (remote version)

Flange according to ASME B16.5, Class 300 **Carbon steel:** *order code for "Process connection", option* **A2K** **Stainless steel:** *order code for "Process connection", option* **A2S**							
DN		**A**	**B**	**C**	**D**	**E**	**L**
[in]	**[mm]**	**[in]**	**[in]**	**[in]**	**[in]**	**[in]**	**[in]**
1	25	4.88	3.5	4 × Ø0.75	0.63	1)	2)
1 ½	40	6.12	4.5	4 × Ø0.88	0.75		
2	50	6.5	5	8 × Ø0.75	0.82		

Flange according to ASME B16.5, Class 300
Carbon steel: *order code for "Process connection", option* **A2K**
Stainless steel: *order code for "Process connection", option* **A2S**

DN		A	B	C	D	E	L
[in]	[mm]	[in]	[in]	[in]	[in]	[in]	[in]
3	80	8.25	6.62	8 × Ø0.88	1.06		
4	100	10	7.88	8 × Ø0.88	1.19		
6	150	12.5	10.62	12 × Ø0.88	1.38		
Surface roughness (flange): Ra 250 to 492 µm							

1) Depends on the liner→ 🖹 81
2) Total length is independent of the process connections. Length according to DVGW (German Technical and Scientific Association for Gas and Water) → 🖹 68 (compact version) → 🖹 70 (remote version)

Flange according to AWWA, Cl. D
Order code for "Process connection", option **W1K**

DN		A	B	C	D	E	L
[in]	[mm]	[in]	[in]	[in]	[in]	[in]	[in]
28	700	36.5	34	28 × Ø1.38	1.31	1)	2)
30	–	38.74	36	28 × Ø1.38	1.38		
32	800	41.73	38.5	28 × Ø1.65	1.5		
36	900	45.98	42.75	32 × Ø1.65	1.63		
40	1000	50.75	47.25	36 × Ø1.65	1.63		
42	–	52.99	49.5	36 × Ø1.65	1.75		
48	1200	59.49	56	44 × Ø1.65	1.88		
54	–	66.26	62.75	44 × Ø1.89	2.13		
60	–	73.03	69.25	52 × Ø1.89	2.25		
66	–	80	76	52 × Ø48	2.5		
72	1800	86.5	82.5	60 × Ø48	2.63		
78	–	92.99	89	64 × Ø54	2.75		
84	–	99.8	95.5	64 × Ø54	2.88		
90	–	106.5	107	68 × Ø60	3		
Surface roughness (flange): Ra 250 to 492 µin							

1) Depends on the liner→ 🖹 81
2) Total length is independent of the process connections. Length according to DVGW (German Technical and Scientific Association for Gas and Water) → 🖹 68 (compact version) → 🖹 70 (remote version)

Lap joint flange

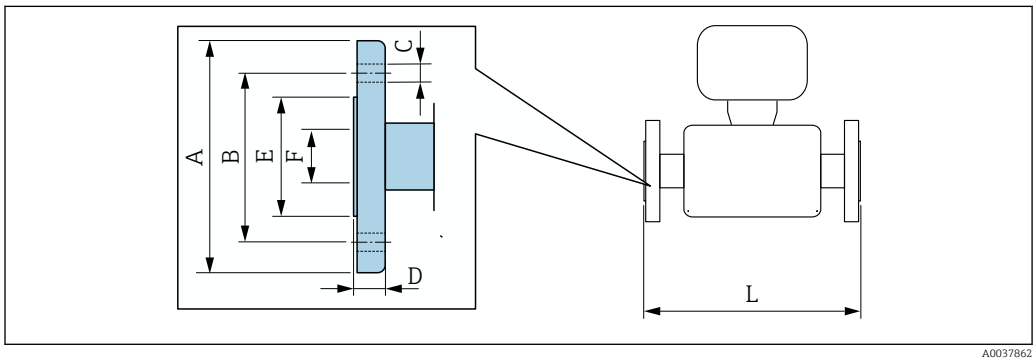

A0037862

Lap joint flange according to ASME B16.5, Class 150
Carbon steel: *order code for "Process connection", option* **A12**
Stainless steel: *order code for "Process connection", option* **A14**

DN		A	B	C	D	E	F	L
[mm]	[in]	[in]	[in]	[in]	[in]	[in]	[in]	[in]
25	1	4.33	3.15	4 × Ø0.63	0.55	1.93	1)	2)
40	1 ½	4.92	3.86	4 × Ø0.63	0.69	2.8		
50	2	5.91	4.76	4 × Ø0.75	0.75	3.46		
80	3	7.48	5.98	4 × Ø0.75	0.94	4.72		
100	4	9.06	7.48	8 × Ø0.75	0.94	5.83		
150	6	11.02	9.49	8 × Ø0.91	0.98	8.23		
200	8	13.58	11.73	8 × Ø0.91	1.14	10.39		
250	10	15.94	14.25	12 × Ø0.98	1.18	12.48		
300	12	19.09	17.01	12 × Ø0.98	1.26	14.88		
Surface roughness (flange): Ra 248 to 492 µin								

1) Depends on the liner→ 🖹 81
2) Total length is independent of the process connections. Length according to DVGW (German Technical and Scientific Association for Gas and Water) → 🖹 68 (compact version) → 🖹 70 (remote version)

Accessories

Ground disks for flange connections

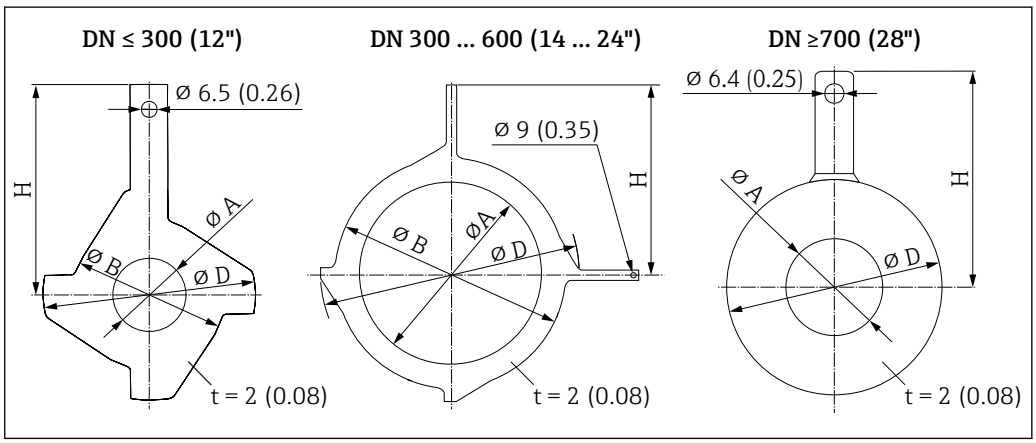

A0015442

DN		Pressure rating	A		B		D		H	
[mm]	[inch]		[mm]	[inch]	[mm]	[inch]	[mm]	[inch]	[mm]	[inch]
25	1"	1)	26	1.02	62	2.44	77.5	3.05	87.5	3.44
32	1 ¼"	1)	35	1.38	80	3.15	87.5	3.44	94.5	3.72
40	1 ½"	1)	41	1.61	82	3.23	101	3.98	103	4.06
50	2"	1)	52	2.05	101	3.98	115.5	4.55	108	4.25
65	2 ½"	1)	68	2.68	121	4.76	131.5	5.18	118	4.65
80	3"	1)	80	3.15	131	5.16	154.5	6.08	135	5.31
100	4"	1)	104	4.09	156	6.14	186.5	7.34	153	6.02
125	5"	1)	130	5.12	187	7.36	206.5	8.13	160	6.30

DN		Pressure rating	A		B		D		H	
[mm]	[inch]		[mm]	[inch]	[mm]	[inch]	[mm]	[inch]	[mm]	[inch]
150	6"	1)	158	6.22	217	8.54	256	10.08	184	7.24
200	8"	1)	206	8.11	267	10.51	288	11.34	205	8.07
250	10"	1)	260	10.24	328	12.91	359	14.13	240	9.45
300	12"	PN 10 PN 16 Cl. 150	312	12.28	375	14.76	413	16.26	273	10.75
		PN 25 JIS 10K JIS 20K	310	12.20	375	14.76	404	15.91	268	10.55
350	14"	PN 6	343	13.50	420	16.54	479	18.86	365	14.37
		PN 10								
		PN 16								
375	15"	PN 16	393	15.5	461	18.2	523	20.6	395	15.6
400	16"	PN 6	393	15.5	470	18.50	542	21.34	395	15.55
		PN 10								
		PN 16								
450	18"	PN 6	439	17.28	525	20.67	583	22.95	417	16.42
		PN 10								
		PN 16								
500	20"	PN 6	493	19.41	575	22.64	650	25.59	460	18.11
		PN 10								
		PN 16								
600	24"	PN 6	593	23.35	676	26.61	766	30.16	522	20.55
		PN 10								
		PN 16								
700	28"	PN 6	697	27.44	–	–	786	30.94	460	18.11
		PN10	693	27.28	–	–	813	32.01	480	18.9
		PN16	687	27.05	–	–	807	31.77	490	19.29
		Cl, D	693	27.28	–	–	832	32.76	494	19.45
750	30"	Cl, D	743	29.25	–	–	833	32.8	523	20.59
800	32"	PN 6	799	31.46	–	–	893	35.16	520	20.47
		PN 10	795	31.3	–	–	920	36.22	540	21.26
		PN 16	789	31.06	–	–	914	35.98	550	21.65
		Cl, D	795	31.3	–	–	940	37.01	561	22.09
900	36"	PN 6	897	35.31	–	–	993	39.09	570	22.44
		PN 10	893	35.16	–	–	1020	40.16	590	23.23
		PN 16	886	34.88	–	–	1014	39.92	595	23.43
		Cl, D	893	35.16	–	–	1048	41.26	615	24.21
1000	40"	PN 6	999	39.33	–	–	1093	43.03	620	24.41
		PN 10	995	39.17	–	–	1127	44.37	650	25.59
		PN 16	988	38.9	–	–	1131	44.53	660	25.98
		Cl, D	995	39.17	–	–	1163	45.79	675	26.57
–	42"	PN 6	1044	41.1	–	–	1220	48.03	704	27.72

DN		Pressure rating	A		B		D		H	
[mm]	[inch]		[mm]	[inch]	[mm]	[inch]	[mm]	[inch]	[mm]	[inch]
1200	48"	PN 6	1203	47.36	–	–	1310	51.57	733	28.86
		PN 10	1196	47.09	–	–	1344	52.91	760	29.92
		PN 16	1196	47.09	–	–	1385	54.53	786	30.94
		Cl, D	1188	46.77	–	–	1345	52.95	775	30.51

1) In the case of DN 25 to 250, ground disks can be used for all the flange standards/pressure ratings which can be supplied in the standard version

Weight

All values (weight exclusive of packaging material) refer to devices with flanges of the standard pressure rating.
The weight may be lower than indicated depending on the pressure rating and design.

Weight in SI units

Order code for "Design", options A, B, C, D, E DN 25 to 400, DN 1" to 16"				
Nominal diameter		Reference values		
		EN (DIN), AS, JIS		ASME (Class 150)
[mm]	[in]	Pressure rating	[kg]	[kg]
25	1	PN 40	10	5
32	–	PN 40	11	–
40	1 ½	PN 40	12	7
50	2	PN 40	13	9
65	–	PN 16	13	–
80	3	PN 16	15	14
100	4	PN 16	18	19
125	–	PN 16	25	–
150	6	PN 16	31	33
200	8	PN 10	52	52
250	10	PN 10	81	90
300	12	PN 10	95	129
350	14	PN 6	106	172
375	15	PN 6	121	–
400	16	PN 6	121	203

Order code for "Design", options A, F ≥ DN 450 (18")				
Nominal diameter		Reference values		
		EN (DIN) (PN16)	AS (PN 16)	ASME (Class 150), AWWA (Class D)
[mm]	[in]	[kg]	[kg]	[kg]
450	18	142	138	191
500	20	182	186	228
600	24	227	266	302
700	28	291	369	266
–	30	–	447	318
800	32	353	524	383
900	36	444	704	470
1000	40	566	785	587
–	42	–	–	670
1200	48	843	1229	901
–	54	–	–	1273
1400	–	1204	–	–
–	60	–	–	1594

Order code for "Design", options A, F ≥ DN 450 (18")				
Nominal diameter		Reference values		
		EN (DIN) (PN16)	AS (PN 16)	ASME (Class 150), AWWA (Class D)
[mm]	[in]	[kg]	[kg]	[kg]
1600	–	1845	–	–
–	66	–	–	2131
1800	72	2357	–	2568
–	78	2929	–	3113
2000	–	2929	–	3113
–	84	–	–	3755
2200	–	3422	–	–
–	90	–	–	4797
2400	–	4094	–	–

Order code for "Design", options B, G ≥ DN 450 (18")			
Nominal diameter		Reference values	
		EN (DIN) (PN 6)	ASME (Class 150), AWWA (Class D)
[mm]	[in]	[kg]	[kg]
450	18	161	255
500	20	156	285
600	24	208	405
700	28	304	400
–	30	–	460
800	32	357	550
900	36	485	800
1000	40	589	900
–	42	–	1100
1200	48	850	1400
–	54	850	2200
1400	–	1300	–
–	60	–	2700
1600	–	1845	–
–	66	–	3700
1800	72	2357	4100
–	78	2929	4600
2000	–	2929	–

Weight in US units

Order code for "Design", options A, B, C, D, E DN 25 to 400, DN 1" to 16"		
Nominal diameter		Reference values ASME (Class 150)
[mm]	[in]	[lb]
25	1	11
32	–	–
40	1 ½	15
50	2	20
65	–	–
80	3	31
100	4	42
125	–	–
150	6	73
200	8	115
250	10	198
300	12	284
350	14	379
375	15	–
400	16	448

Order code for "Design", options A, F ≥ DN 450 (18")		
Nominal diameter		Reference values ASME (Class 150), AWWA (Class D)
[mm]	[in]	[lb]
450	18	421
500	20	503
600	24	666
700	28	587
–	30	701
800	32	845
900	36	1036
1000	40	1294
–	42	1477
1200	48	1987
–	54	2807
1400	–	–
–	60	3515
1600	–	–
–	66	4699
1800	72	5662
–	78	6864
2000	–	6864

Order code for "Design", options A, F ≥ DN 450 (18")		
Nominal diameter		Reference values ASME (Class 150), AWWA (Class D)
[mm]	[in]	[lb]
–	84	8280
2200	–	–
–	90	10577
2400	–	–

Order code for "Design", options B, G ≥ DN 450 (18")		
Nominal diameter		Reference values ASME (Class 150), AWWA (Class D)
[mm]	[in]	[lb]
450	18	562
500	20	628
600	24	893
700	28	882
–	30	1014
800	32	1213
900	36	1764
1000	40	1984
–	42	2426
1200	48	3087
–	54	4851
1400	–	–
–	60	5954
1600	–	–
–	66	8158
1800	72	9040
–	78	10143
2000	–	–

Measuring tube specification

Nominal diameter		Pressure rating				Measuring tube internal diameter					
		EN (DIN)	ASME AWWA	AS 2129 AS 4087	JIS	Hard rubber		Polyurethane		PTFE	
[mm]	[in]					[mm]	[in]	[mm]	[in]	[mm]	[in]
25	1	PN 40	Class 150	–	20K	–	–	24	0.94	25	0.98
32	–	PN 40	–	–	20K	–	–	32	1.26	34	1.34
40	1 ½	PN 40	Class 150	–	20K	–	–	38	1.50	40	1.57
50	2	PN 40	Class 150	Table E, PN 16	10K	50	1.97	50	1.97	52	2.05
50 [1)]	2	PN 40	Class 150	Table E, PN 16	10K	32	1.26	–	–	–	–
65	–	PN 16	–	–	10K	66	2.60	66	2.60	68	2.68

Nominal diameter		Pressure rating				Measuring tube internal diameter					
		EN (DIN)	ASME AWWA	AS 2129 AS 4087	JIS	Hard rubber		Polyurethane		PTFE	
[mm]	[in]					[mm]	[in]	[mm]	[in]	[mm]	[in]
65 [1]	–	PN 16	–	–	10K	38	1.50	–	–	–	–
80	3	PN 16	Class 150	Table E, PN 16	10K	79	3.11	79	3.11	80	3.15
80 [1]	3	PN 16	Class 150	Table E, PN 16	10K	50	1.97	–	–	–	–
100	4	PN 16	Class 150	Table E, PN 16	10K	102	4.02	102	4.02	104	4.09
100 [1]	4	PN 16	Class 150	Table E, PN 16	10K	66	2.60	–	–	–	–
125	–	PN 16	–	–	10K	127	5.00	127	5.00	130	5.12
125 [1]	–	PN 16	–	–	10K	79	3.11	–	–	–	–
150	6	PN 16	Class 150	Table E, PN 16	10K	156	6.14	156	6.14	156	6.14
150 [1]	6	PN 16	Class 150	Table E, PN 16	10K	102	4.02	–	–	–	–
200	8	PN 10	Class 150	Table E, PN 16	10K	204	8.03	204	8.03	202	7.95
200 [1]	8	PN 16	Class 150	Table E, PN 16	10K	127	5.00	–	–	–	–
250	10	PN 10	Class 150	Table E, PN 16	10K	258	10.2	258	10.2	256	10.08
250 [1]	10	PN 16	Class 150	Table E, PN 16	10K	156	6.14	–	–	–	–
300	12	PN 10	Class 150	Table E, PN 16	10K	309	12.2	309	12.2	306	12.05
300 [1]	12	PN 16	Class 150	Table E, PN 16	10K	204	8.03	–	–	–	–
350	14	PN 6	Class 150	Table E, PN 16	10K	337	13.3	342	13.5	–	–
375	15	–	–	PN 16	10K	389	15.3	–	–	–	–
400	16	PN 6	Class 150	Table E, PN 16	10K	387	15.2	392	15.4	–	–
450	18	PN 6	Class 150	–	10K	436	17.1	437	17.2	–	–
500	20	PN 6	Class 150	Table E, PN 16	10K	487	19.1	492	19.4	–	–
600	24	PN 6	Class 150	Table E, PN 16	10K	589	23.0	594	23.4	–	–
700	28	PN 6	Class D	Table E, PN 16	10K	688	27.1	692	27.2	–	–
750	30	–	Class D	Table E, PN 16	10K	737	29.1	742	29.2	–	–
800	32	PN 6	Class D	Table E, PN 16	–	788	31.0	794	31.3	–	–
900	36	PN 6	Class D	Table E, PN 16	–	889	35.0	891	35.1	–	–
1000	40	PN 6	Class D	Table E, PN 16	–	991	39.0	994	39.1	–	–
–	42	–	Class D	–	–	1043	41.1	1043	41.1	–	–
1200	48	PN 6	Class D	Table E, PN 16	–	1191	46.9	1197	47.1	–	–
–	54	–	Class D	–	–	1339	52.7	–	–	–	–
1400	–	PN 6	–	–	–	1402	55.2	–	–	–	–
–	60	–	Class D	–	–	1492	58.7	–	–	–	–
1600	–	PN 6	–	–	–	1600	63.0	–	–	–	–
–	66	–	Class D	–	–	1638	64.5	–	–	–	–
1800	72	PN 6	–	–	–	1786	70.3	–	–	–	–
–	78	–	Class D	–	–	1989	78.3	–	–	–	–
2000	–	PN 6	–	–	–	1989	78.3	–	–	–	–
–	84	–	Class D	–	–	2099	84.0	–	–	–	–
2200	–	PN 6	–	–	–	2194	87.8	–	–	–	–

Nominal diameter		Pressure rating				Measuring tube internal diameter					
		EN (DIN)	ASME AWWA	AS 2129 AS 4087	JIS	Hard rubber		Polyurethane		PTFE	
[mm]	[in]					[mm]	[in]	[mm]	[in]	[mm]	[in]
–	90	–	Class D	–	–	2 246	89.8	–	–	–	–
2400	–	PN 6	–	–	–	2 391	94.1	–	–	–	–

1) Order code for "Design", option C

Materials

Transmitter housing

Compact version

- Order code for "Housing", option **A** "Compact, alu, coated": Aluminum, AlSi10Mg, coated
- Order code for "Housing", option **M**: polycarbonate plastic
- Window material:
  - For order code for "Housing", option **A**: glass
  - For order code for "Housing", option **M**: plastic

Remote version (wall-mount housing)

- Order code for "Housing", option **P** "Remote, alu, coated": Aluminum, AlSi10Mg, coated
- Order code for "Housing", option **N**: polycarbonate plastic
- Window material:
  - For order code for "Housing", option **P**: glass
  - For order code for "Housing", option **N**: plastic

Sensor connection housing

- Aluminum, AlSi10Mg, coated
- Polycarbonate plastic (only in conjunction with order code for "Sensor option", options CA...CE)

Cable entries/cable glands

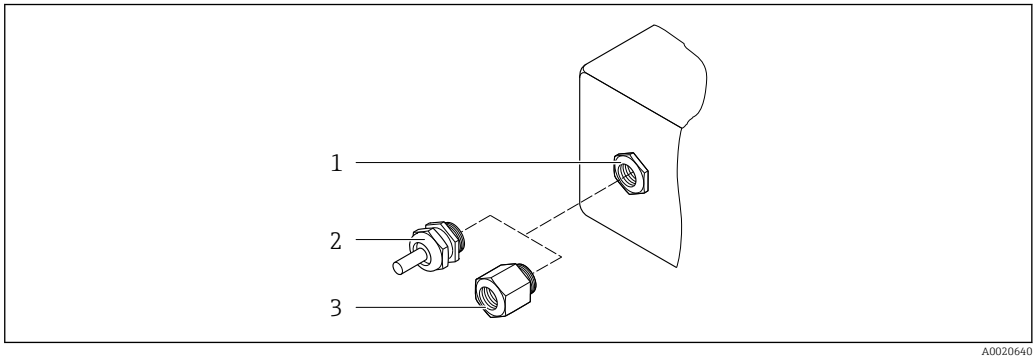

36 Possible cable entries/cable glands

1 Female thread M20 × 1.5
2 Cable gland M20 × 1.5
3 Adapter for cable entry with internal thread G ½" or NPT ½"

Compact and remote versions and sensor connection housing

Cable entry/cable gland	Material
Cable gland M20 × 1.5	Plastic
Remote version: cable gland M20 × 1.5 Option of reinforced connecting cable	▪ Sensor connection housing: Nickel-plated brass ▪ Transmitter wall-mount housing: Plastic
Adapter for cable entry with internal thread G ½" or NPT ½"	Nickel-plated brass

Device plug

Electrical connection	Material
Plug M12x1	▪ Socket: Stainless steel, 1.4404 (316L) ▪ Contact housing: Polyamide ▪ Contacts: Gold-plated brass

Connecting cable for remote version

Electrode and coil current cable
- Standard cable: PVC cable with copper shield
- Reinforced cable: PVC cable with copper shield and additional steel wire braided jacket

Sensor housing

- DN 25 to 300 (1 to 12")
  - Aluminum half-shell housing, aluminum, AlSi10Mg, coated
  - Fully welded carbon steel housing with protective varnish
- DN 350 to 2400 (14 to 90")
  Fully welded carbon steel housing with protective varnish

Measuring tubes

- DN 25 to 600 (1 to 24")
  Stainless steel: 1.4301, 1.4306, 304, 304L
- DN 700 to 2400 (28 to 90")
  Stainless steel: 1.4301, 304

Liner

- DN 25 to 300 (1 to 12"): PTFE
- DN 25 to 1200 (1 to 48"): polyurethane
- DN 50 to 2400 (2 to 90"): hard rubber

Electrodes

- Stainless steel, 1.4435 (316L)
- Alloy C22, 2.4602 (UNS N06022)
- Tantalum

Process connections

For flanges made of carbon steel:
- DN ≤ 300 (12"): with Al/Zn protective coating or protective varnish
- DN ≥ 350 (14"): protective varnish

All carbon steel lap joint flanges are supplied with a hot-dip galvanized finish.

EN 1092-1 (DIN 2501)

Fixed flange
- Carbon steel:
  - DN ≤ 300: S235JRG2, S235JR+N, P245GH, A105, E250C
  - DN 350 to 2400: P245GH, S235JRG2, A105, E250C
- Stainless steel:
  - DN ≤ 300: 1.4404, 1.4571, F316L
  - DN 350 to 600: 1.4571, F316L, 1.4404
  - DN 700 to 1000: 1.4404, F316L

Lap joint flange
- Carbon steel DN ≤ 300: S235JRG2, A105, E250C
- Stainless steel DN ≤ 300: 1.4306,1.4404, 1.4571, F316L

Lap joint flange, stamped plate
- Carbon steel DN ≤ 300: S235JRG2 similar to S235JR+AR or 1.0038
- Stainless steel DN ≤ 300: 1.4301 similar to 304

ASME B16.5

Fixed flange, lap joint flange
- Carbon steel: A105
- Stainless steel: F316L

JIS B2220

- Carbon steel: A105, A350 LF2
- Stainless steel: F316L

AWWA C207

Carbon steel: A105, P265GH, A181 Class 70, E250C, S275JR

AS 2129

Carbon steel: A105, E250C, P235GH, P265GH, S235JRG2

AS 4087

Carbon steel: A105, P265GH, S275JR

Seals

As per DIN EN 1514-1, form IBC

Accessories

Display guard

Stainless steel, 1.4301 (304L)

Ground disks

- Stainless steel, 1.4435 (316L)
- Alloy C22, 2.4602 (UNS N06022)
- Tantalum

Fitted electrodes

Measurement, reference and empty pipe detection electrodes available as standard with:
- 1.4435 (316L)
- Alloy C22, 2.4602 (UNS N06022)
- Tantalum

Process connections

- EN 1092-1 (DIN 2501)
  - DN ≤ 300: fixed flange (PN 10/16/25/40) = Form A, lap joint flange (PN 10/16), lap joint flange, stamped plate (PN 10) = Form A
  - DN ≥ 350: fixed flange (PN 6/10/16/25) = flat face (Form B)
  - DN 450 to 2400: fixed flange (PN 6/10/16) = flat face (Form B)
- ASME B16.5
  - DN 350 to 2400 (14 to 90"): fixed flange (Class 150)
  - DN 25 to 600 (1 to 24"): lap joint flange (Class 150)
  - DN 25 to 150 (1 to 6"): fixed flange (Class 300)
- JIS B2220
  - DN 50 to 750: fixed flange (10K)
  - DN 25 to 600: fixed flange (20K)
- AWWA C207
  DN 48 to 90": fixed flange (Class D)
- AS 2129
  DN 50 to 1200: fixed flange (Table E)
- AS 4087
  DN 50 to 1200): fixed flange (PN 16)

For information on the different materials used in the process connections → 84

Surface roughness

Electrodes with 1.4435 (316L); Alloy C22, 2.4602 (UNS N06022); tantalum:
≤ 0.3 to 0.5 µm (11.8 to 19.7 µin)
(All data relate to parts in contact with fluid)

Human interface

Operating concept

Operator-oriented menu structure for user-specific tasks
- Commissioning
- Operation
- Diagnostics
- Expert level

Fast and safe commissioning
- Guided menus ("Make-it-run" wizards) for applications
- Menu guidance with brief descriptions of the individual parameter functions
- Access to the device via Web server or SmartBlue App → 97
- WLAN access to the device via mobile handheld terminal, tablet or smart phone

Reliable operation
- Operation in local language
- Uniform operating philosophy applied to device and operating tools
- If replacing electronic modules, transfer the device configuration via the integrated memory (HistoROM backup) which contains the process and measuring device data and the event logbook. No need to reconfigure.

Efficient diagnostics increase measurement availability
- Troubleshooting measures can be called up via the device and in the operating tools
- Diverse simulation options, logbook for events that occur and optional line recorder functions

Languages

Can be operated in the following languages:
- Via local operation:
  English, German, French, Spanish, Italian, Dutch, Portuguese, Polish, Russian, Turkish, Chinese, Japanese, Bahasa (Indonesian), Vietnamese, Czech, Swedish
- Via "FieldCare", "DeviceCare" operating tool:
  English, German, French, Spanish, Italian, Chinese, Japanese
- Via Web browser (only available for device versions with HART, PROFIBUS DP and EtherNet/IP):
  English, German, French, Spanish, Italian, Dutch, Portuguese, Polish, Russian, Turkish, Chinese, Japanese, Bahasa (Indonesian), Vietnamese, Czech, Swedish

Local display

Via display module

Features:
- Standard features 4-line, illuminated, graphic display; touch control
- Order code for "Display; operation", option BA "WLAN" = standard features plus access via Web browser

Information about WLAN interface → 89

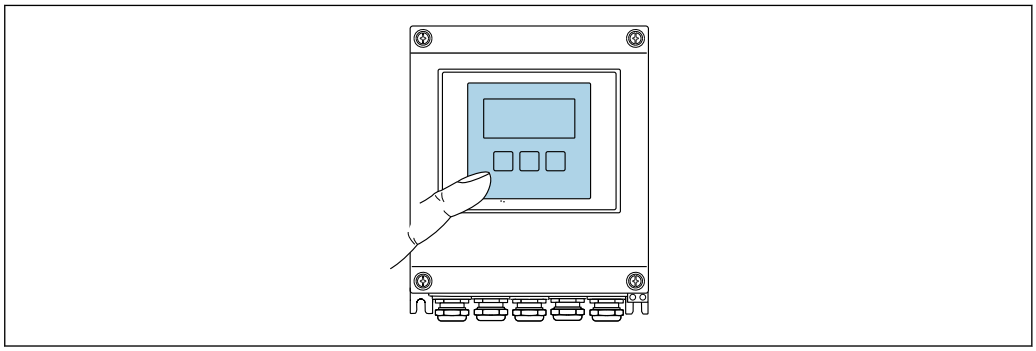

A0032074

37 *Operation with touch control*

Display elements

- 4-line, illuminated, graphic display
- White background lighting; switches to red in event of device errors
- Format for displaying measured variables and status variables can be individually configured
- Permitted ambient temperature for the display: −20 to +60 °C (−4 to +140 °F)
  The readability of the display may be impaired at temperatures outside the temperature range.

Operating elements

- External operation via touch control (3 optical keys) without opening the housing: ⊞, ⊟, Ⓔ
- Operating elements also accessible in the various zones of the hazardous area

Remote operation

Via HART protocol

This communication interface is available in device versions with a HART output.

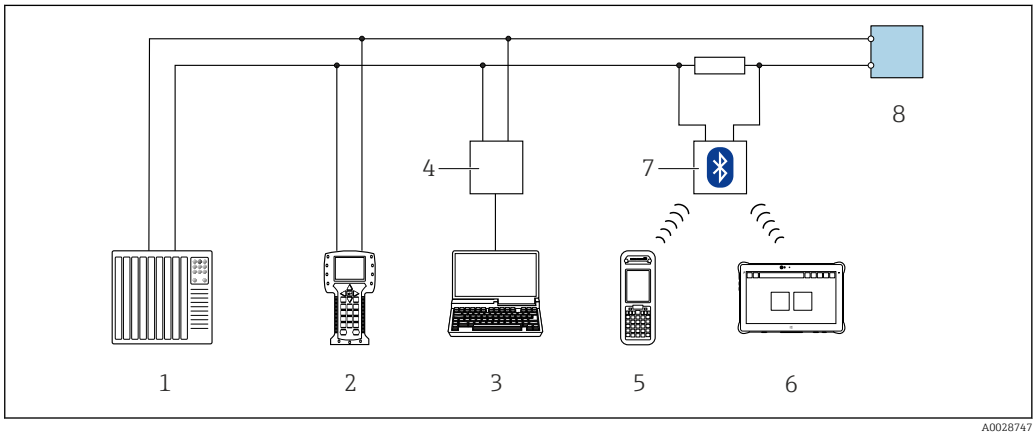

A0028747

38 *Options for remote operation via HART protocol*

1 *Control system (e.g. PLC)*
2 *Field Communicator 475*
3 *Computer with operating tool (e.g. FieldCare, AMS Device Manager, SIMATIC PDM)*
4 *Commubox FXA195 (USB)*
5 *Field Xpert SFX350 or SFX370*
6 *Field Xpert SMT70*
7 *VIATOR Bluetooth modem with connecting cable*
8 *Transmitter*

Via PROFIBUS DP network

This communication interface is available in device versions with PROFIBUS DP.

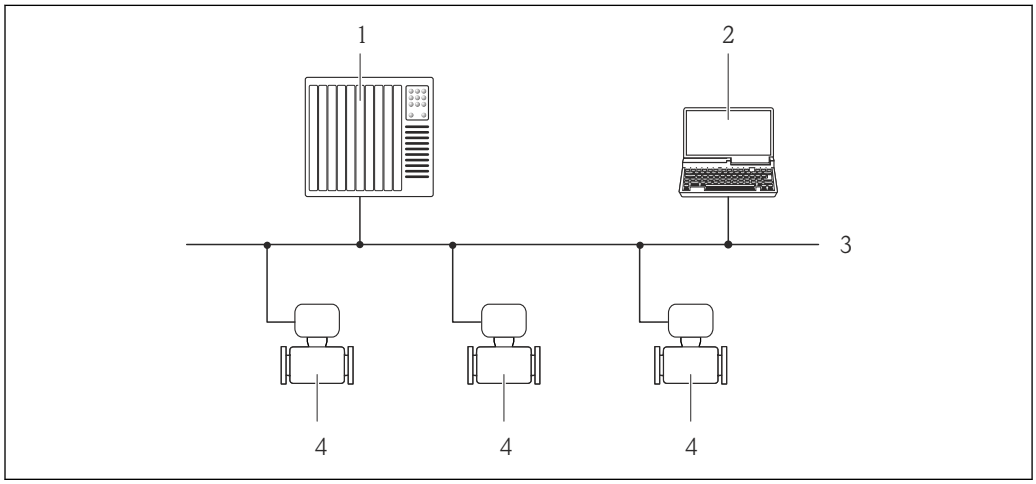

39 Options for remote operation via PROFIBUS DP network

1 Automation system
2 Computer with PROFIBUS network card
3 PROFIBUS DP network
4 Measuring device

Via Modbus RS485 protocol

This communication interface is available in device versions with a Modbus-RS485 output.

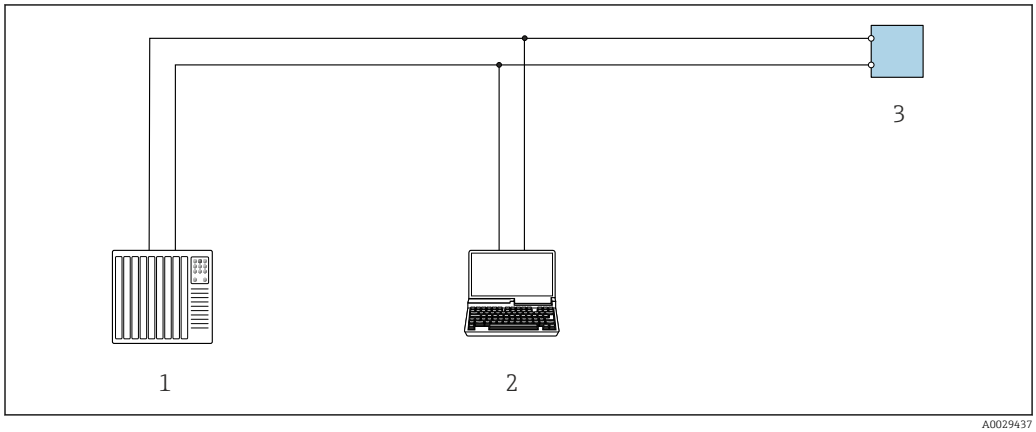

40 Options for remote operation via Modbus-RS485 protocol (active)

1 Control system (e.g. PLC)
2 Computer with Web browser (e.g. Internet Explorer) for accessing the integrated device Web server or with operating tool (e.g. FieldCare, DeviceCare) with COM DTM "CDI Communication TCP/IP" or Modbus DTM
3 Transmitter

Via EtherNet/IP network

This communication interface is available in device versions with EtherNet/IP.

Star topology

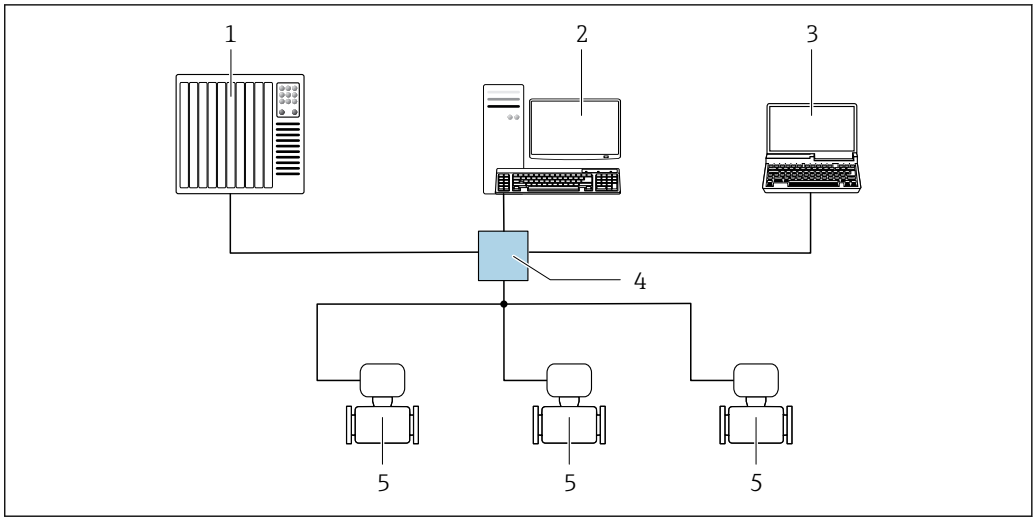

41 Options for remote operation via EtherNet/IP network: star topology

1 Automation system, e.g. "RSLogix" (Rockwell Automation)
2 Workstation for measuring device operation: with Custom Add-On Profile for "RSLogix 5000" (Rockwell Automation) or with Electronic Data Sheet (EDS)
3 Computer with Web browser (e.g. Internet Explorer) for accessing the integrated device Web server or computer with operating tool (e.g. FieldCare, DeviceCare) with COM DTM "CDI Communication TCP/IP"
4 Ethernet switch
5 Measuring device

Service interface

Via service interface (CDI-RJ45)

This communication interface is present in the following device version:
- Order code for "Output", option **H**: 4-20/0-20 mA HART, pulse/frequency/switch output
- Order code for "Output", option **I**: 4-20/0-20 mA HART, pulse/frequency/switch output, status input
- Order code for "Output", option **L**: PROFIBUS DP
- Order code for "Output", option **N**: EtherNet/IP
- Order code for "Output", option **M**: Modbus RS485

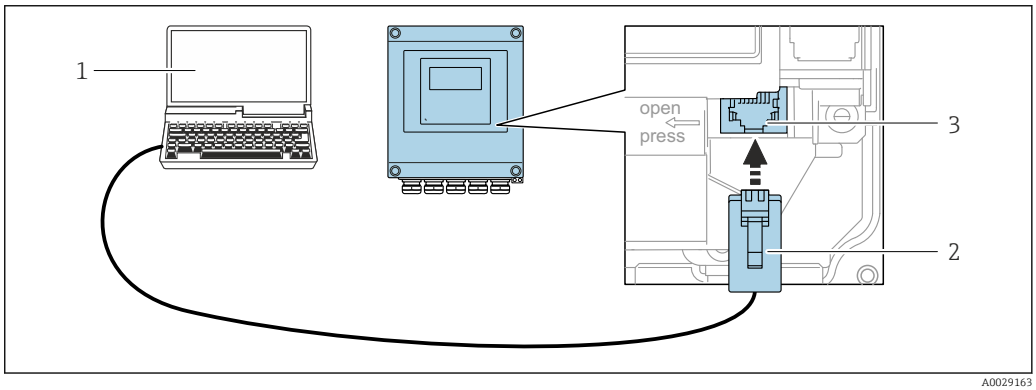

42 Connection via service interface (CDI-RJ45)

1 Computer with Web browser (e.g. Microsoft Internet Explorer, Microsoft Edge) for accessing the integrated device Web server or with "FieldCare", "DeviceCare" operating tool with COM DTM "CDI Communication TCP/IP" or Modbus DTM
2 Standard Ethernet connecting cable with RJ45 plug
3 Service interface (CDI-RJ45) of the measuring device with access to the integrated Web server

Via WLAN interface

The optional WLAN interface is available on the following device version:
Order code for "Display", option BA "WLAN":
4-line, illuminated, graphic display; touch control + WLAN

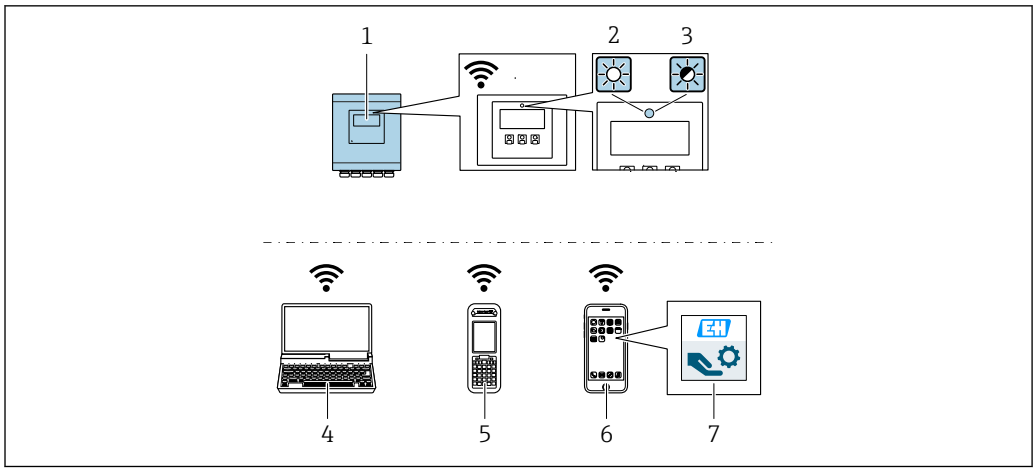

1 *Transmitter with integrated WLAN antenna*
2 *LED lit constantly: WLAN reception is enabled on measuring device*
3 *LED flashing: WLAN connection established between operating unit and measuring device*
4 *Computer with WLAN interface and Web browser (e.g. Microsoft Internet Explorer, Microsoft Edge) for accessing the integrated device Web server or with operating tool (e.g. FieldCare, DeviceCare)*
5 *Mobile handheld terminal with WLAN interface and Web browser (e.g. Microsoft Internet Explorer, Microsoft Edge) for accessing the integrated device Web server or operating tool (e.g. FieldCare, DeviceCare)*
6 *Smart phone or tablet (e.g. Field Xpert SMT70)*
7 *SmartBlue App*

Function	WLAN: IEEE 802.11 b/g (2.4 GHz) ▪ Access point with DHCP server (default setting) ▪ Network
Encryption	WPA2-PSK AES-128 (in accordance with IEEE 802.11i)
Configurable WLAN channels	1 to 11
Degree of protection	IP67
Available antennas	▪ Internal antenna ▪ External antenna (optional) In the event of poor transmission/reception conditions at the place of installation. Available as an accessory . Only one antenna active in each case!
Range	▪ Internal antenna: typically 10 m (32 ft) ▪ External antenna: typically 50 m (164 ft)
Materials (external antenna)	▪ Antenna: ASA plastic (acrylic ester-styrene-acrylonitrile) and nickel-plated brass ▪ Adapter: Stainless steel and nickel-plated brass ▪ Cable: Polyethylene ▪ Connector: Nickel-plated brass ▪ Angle bracket: Stainless steel

Supported operating tools

Different operating tools can be used for local or remote access to the measuring device. Depending on the operating tool used, access is possible with different operating units and via a variety of interfaces.

Supported operating tools	Operating unit	Interface	Additional information
Web browser	Notebook, PC or tablet with Web browser	▪ CDI-RJ45 service interface ▪ WLAN interface ▪ Ethernet-based fieldbus (EtherNet/IP)	Special Documentation for device
DeviceCare SFE100	Notebook, PC or tablet with Microsoft Windows system	▪ CDI-RJ45 service interface ▪ WLAN interface ▪ Fieldbus protocol	→ 🖹 97
FieldCare SFE500	Notebook, PC or tablet with Microsoft Windows system	▪ CDI-RJ45 service interface ▪ WLAN interface ▪ Fieldbus protocol	→ 🖹 97
Device Xpert	Field Xpert SFX 100/350/370	HART and FOUNDATION Fieldbus fieldbus protocol	Operating Instructions BA01202S Device description files: Use update function of handheld terminal

Other operating tools based on FDT technology with a device driver such as DTM/iDTM or DD/EDD can be used for device operation. These operating tools are available from the individual manufacturers. Integration into the following operating tools, among others, is supported:

- FactoryTalk AssetCentre (FTAC) by Rockwell Automation → www.rockwellautomation.com
- Process Device Manager (PDM) by Siemens → www.siemens.com
- Asset Management Solutions (AMS) by Emerson → www.emersonprocess.com
- FieldCommunicator 375/475 by Emerson → www.emersonprocess.com
- Field Device Manager (FDM) by Honeywell → www.honeywellprocess.com
- FieldMate by Yokogawa → www.yokogawa.com
- PACTWare → www.pactware.com

The associated device description files are available at: www.endress.com → Downloads

Web server

Thanks to the integrated Web server, the device can be operated and configured via a Web browser and via a service interface (CDI-RJ45) or via a WLAN interface. The structure of the operating menu is the same as for the local display. In addition to the measured values, status information on the device is also displayed and allows the user to monitor the status of the device. Furthermore the device data can be managed and the network parameters can be configured.

A device that has a WLAN interface (can be ordered as an option) is required for the WLAN connection: order code for "Display", option BA "WLAN": 4-line, illuminated; touch control + WLAN. The device acts as an Access Point and enables communication by computer or a mobile handheld terminal.

Supported functions
Data exchange between the operating unit (such as a notebook for example) and the measuring device:
- Upload the configuration from the measuring device (XML format, configuration backup)
- Save the configuration to the measuring device (XML format, restore configuration)
- Export event list (.csv file)
- Export parameter settings (.csv file or PDF file, document the measuring point configuration)
- Export the Heartbeat verification log (PDF file, only available with the "Heartbeat Verification" application package)
- Flash firmware version for device firmware upgrade, for instance
- Download driver for system integration
- Visualize up to 1000 saved measured values (only available with the **Extended HistoROM** application package → 🖹 95)

Web server special documentation → 🖹 98

HistoROM data management

The measuring device features HistoROM data management. HistoROM data management comprises both the storage and import/export of key device and process data, making operation and servicing far more reliable, secure and efficient.

Additional information on the data storage concept

There are different types of data storage units in which device data are stored and used by the device:

	Device memory	T-DAT	S-DAT

Available data	▪ Device firmware package
	▪ Driver for system integration e.g.:
	  ▪ GSD for PROFIBUS DP
	  ▪ EDS for EtherNet/IP
		▪ Event history, such as diagnostic events
		▪ Measured value memory ("Extended HistoROM" order option)
		▪ Current parameter data record (used by firmware at run time)
		▪ Maximum indicators (min/max values)
		▪ Totalizer values
			▪ Sensor data: diameter etc.
			▪ Serial number
			▪ User-specific access code (to use the "Maintenance" user role)
			▪ Calibration data
			▪ Device configuration (e.g. SW options, fixed I/O or multi I/O)

Storage location	Fixed on the user interface board in the connection compartment	Can be plugged into the user interface board in the connection compartment	In the sensor plug in the transmitter neck part

Data backup

Automatic
- The most important device data (sensor and transmitter) are automatically saved in the DAT modules
- If the transmitter or measuring device is replaced: once the T-DAT containing the previous device data has been exchanged, the new measuring device is ready for operation again immediately without any errors
- If the sensor is replaced: once the sensor has been replaced, new sensor data are transferred from the S-DAT in the measuring device and the measuring device is ready for operation again immediately without any errors

Data transfer

Manual
- Transfer of a device configuration to another device using the export function of the specific operating tool, e.g. with FieldCare, DeviceCare or Web server: to duplicate the configuration or to store in an archive (e.g. for backup purposes)
- Transmission of the drivers for system integration via Web server, e.g.:
  - GSD for PROFIBUS DP
  - EDS for EtherNet/IP

Event list

Automatic
- Chronological display of up to 20 event messages in the events list
- If the **Extended HistoROM** application package (order option) is enabled: up to 100 event messages are displayed in the events list along with a time stamp, plain text description and remedial measures
- The events list can be exported and displayed via a variety of interfaces and operating tools e.g. DeviceCare, FieldCare or Web server

Data logging

Manual

If the **Extended HistoROM** application package (order option) is enabled:
- Record up to 1 000 measured values via 1 to 4 channels
- User configurable recording interval
- Record up to 250 measured values via each of the 4 memory channels
- Export the measured value log via a variety of interfaces and operating tools e.g. FieldCare, DeviceCare or web server

Certificates and approvals

Currently available certificates and approvals can be called up via the product configurator.

CE mark

The device meets the legal requirements of the applicable EU Directives. These are listed in the corresponding EU Declaration of Conformity along with the standards applied.

Endress+Hauser confirms successful testing of the device by affixing to it the CE mark.

RCM-tick symbol

The measuring system meets the EMC requirements of the "Australian Communications and Media Authority (ACMA)".

Ex approval

The devices are certified for use in hazardous areas and the relevant safety instructions are provided in the separate "Control Drawing" document. Reference is made to this document on the nameplate.

Drinking water approval

- ACS
- KTW/W270
- NSF 61
- WRAS BS 6920

HART certification

HART interface

The measuring device is certified and registered by the FieldComm Group. The measuring system meets all the requirements of the following specifications:
- Certified according to HART 7
- The device can also be operated with certified devices of other manufacturers (interoperability)

Certification PROFIBUS

PROFIBUS interface

The measuring device is certified and registered by the PNO (PROFIBUS User Organization Organization). The measuring system meets all the requirements of the following specifications:
- Certified in accordance with PROFIBUS PA Profile 3.02
- The device can also be operated with certified devices of other manufacturers (interoperability)

Modbus RS485 certification

The measuring device meets all the requirements of the MODBUS/TCP conformity test and has the "MODBUS/TCP Conformance Test Policy, Version 2.0". The measuring device has successfully passed all the test procedures carried out.

EtherNet/IP certification

The measuring device is certified and registered by the ODVA (Open Device Vendor Association). The measuring system meets all the requirements of the following specifications:
- Certified in accordance with the ODVA Conformance Test
- EtherNet/IP Performance Test
- EtherNet/IP PlugFest compliance
- The device can also be operated with certified devices of other manufacturers (interoperability)

Radio approval

The measuring device has radio approval.

For detailed information regarding radio approval, see Special Documentation → 98

Measuring instrument approval

The measuring device is (optionally) approved as a cold water meter (MI-001) for volume measurement in service subject to legal metrological control in accordance with the European Measuring Instruments Directive 2014/32/EU (MID).

The measuring device is qualified to OIML R49: 2013.

Other standards and guidelines

- EN 60529
  Degrees of protection provided by enclosures (IP code)
- EN 61010-1
  Safety requirements for electrical equipment for measurement, control and laboratory use - general requirements
- IEC/EN 61326
  Emission in accordance with Class A requirements. Electromagnetic compatibility (EMC requirements).

- ANSI/ISA-61010-1 (82.02.01)
  Safety Requirements for Electrical Equipment for Measurement, Control and Laboratory Use - Part 1 General Requirements
- CAN/CSA-C22.2 No. 61010-1-12
  Safety Requirements for Electrical Equipment for Measurement, Control and Laboratory Use - Part 1 General Requirements
- NAMUR NE 21
  Electromagnetic compatibility (EMC) of industrial process and laboratory control equipment
- NAMUR NE 32
  Data retention in the event of a power failure in field and control instruments with microprocessors
- NAMUR NE 43
  Standardization of the signal level for the breakdown information of digital transmitters with analog output signal.
- NAMUR NE 53
  Software of field devices and signal-processing devices with digital electronics
- NAMUR NE 105
  Specifications for integrating fieldbus devices in engineering tools for field devices
- NAMUR NE 107
  Self-monitoring and diagnosis of field devices
- NAMUR NE 131
  Requirements for field devices for standard applications

Ordering information

Detailed ordering information is available from the following sources:
- In the Product Configurator on the Endress+Hauser website: www.endress.com -> Click "Corporate" -> Select your country -> Click "Products" -> Select the product using the filters and search field -> Open product page -> The "Configure" button to the right of the product image opens the Product Configurator.
- From your Endress+Hauser Sales Center: www.addresses.endress.com

Product Configurator - the tool for individual product configuration
- Up-to-the-minute configuration data
- Depending on the device: Direct input of measuring point-specific information such as measuring range or operating language
- Automatic verification of exclusion criteria
- Automatic creation of the order code and its breakdown in PDF or Excel output format
- Ability to order directly in the Endress+Hauser Online Shop

Product generation index

Release date	Product root	Modification
01.07.2012	5W4B	Original
01.11.2016	5W4C	▪ Web server: current version ▪ Logbook: current concept, including Parameter Change ▪ Upload/download: current concept ▪ Heartbeat Technology: new hardware, diagnostics, events ▪ Security concept: encrypted password transmission ▪ WLAN ▪ Custody transfer mode

More information is available from your Sales Center or at:
www.service.endress.com → Downloads

Application packages

Many different application packages are available to enhance the functionality of the device. Such packages might be needed to address safety aspects or specific application requirements.

The application packages can be ordered with the device or subsequently from Endress+Hauser. Detailed information on the order code in question is available from your local Endress+Hauser sales center or on the product page of the Endress+Hauser website: www.endress.com.

Cleaning

Package	Description
Electrode cleaning circuit (ECC)	The electrode cleaning circuit (ECC) function has been developed to have a solution for applications where magnetite (Fe_3O_4) deposits frequently occur (e.g. hot water). Since magnetite is highly conductive this build up leads to measuring errors and ultimately to the loss of signal. The application package is designed to AVOID build up of highly conductive matter and thin layers (typical of magnetite).

Diagnostics functions

Package	Description
Extended HistoROM	Comprises extended functions concerning the event log and the activation of the measured value memory. Event log: Memory volume is extended from 20 message entries (standard version) to up to 100 entries. Data logging (line recorder): ▪ Memory capacity for up to 1000 measured values is activated. ▪ 250 measured values can be output via each of the 4 memory channels. The recording interval can be defined and configured by the user. ▪ Measured value logs can be accessed via the local display or operating tool e.g. FieldCare, DeviceCare or Web server.

Heartbeat Technology

Package	Description
Heartbeat Verification +Monitoring	**Heartbeat Verification** Meets the requirement for traceable verification to DIN ISO 9001:2008 Chapter 7.6 a) "Control of monitoring and measuring equipment". ▪ Functional testing in the installed state without interrupting the process. ▪ Traceable verification results on request, including a report. ▪ Simple testing process via local operation or other operating interfaces. ▪ Clear measuring point assessment (pass/fail) with high test coverage within the framework of manufacturer specifications. ▪ Extension of calibration intervals according to operator's risk assessment. **Heartbeat Monitoring** Continuously supplies data, which are characteristic of the measuring principle, to an external condition monitoring system for the purpose of preventive maintenance or process analysis. These data enable the operator to: ▪ Draw conclusions - using these data and other information - about the impact process influences (such as corrosion, abrasion, buildup etc.) have on the measuring performance over time. ▪ Schedule servicing in time. ▪ Monitor the process or product quality, e.g. gas pockets.

Accessories

Various accessories, which can be ordered with the device or subsequently from Endress+Hauser, are available for the device. Detailed information on the order code in question is available from your local Endress+Hauser sales center or on the product page of the Endress+Hauser website: www.endress.com.

Device-specific accessories

For the transmitter

Accessories	Description
Promag 400 transmitter	Transmitter for replacement or storage. Use the order code to define the following specifications: ▪ Approvals ▪ Output / input ▪ Display/operation ▪ Housing ▪ Software For details, see Installation Instructions EA00104D
Display guard	Is used to protect the display against impact or scoring from sand in desert areas. Order number: 71228792 Installation Instructions EA01093D
Connecting cable for remote version	Coil current and electrode cables, various lengths, reinforced cables available on request.
Ground cable	Set, consisting of two ground cables for potential equalization.
Post mounting kit	Post mounting kit for transmitter.
Compact → Remote conversion kit	For converting a compact device version to a remote device version.
Conversion kit Promag 50/53 → Promag 400	For converting a Promag with transmitter 50/53 to a Promag 400.

For the sensor

Accessories	Description
Ground disks	Are used to ground the medium in lined measuring tubes to ensure proper measurement. For details, see Installation Instructions EA00070D

Communication-specific accessories

Accessories	Description
Commubox FXA195 HART	For intrinsically safe HART communication with FieldCare via the USB interface. Technical Information TI00404F
Commubox FXA291	Connects Endress+Hauser field devices with a CDI interface (= Endress+Hauser Common Data Interface) and the USB port of a computer or laptop. Technical Information TI405C/07
HART Loop Converter HMX50	Is used to evaluate and convert dynamic HART process variables to analog current signals or limit values. ▪ Technical Information TI00429F ▪ Operating Instructions BA00371F
Wireless HART adapter SWA70	Is used for the wireless connection of field devices. The WirelessHART adapter can be easily integrated into field devices and existing infrastructures, offers data protection and transmission safety and can be operated in parallel with other wireless networks with minimum cabling complexity. Operating Instructions BA00061S
Fieldgate FXA42	Is used to transmit the measured values of connected 4 to 20 mA analog measuring devices, as well as digital measuring devices ▪ Technical Information TI01297S ▪ Operating Instructions BA01778S ▪ Product page: www.endress.com/fxa42

Field Xpert SMT70	The Field Xpert SMT70 tablet PC for device configuration enables mobile plant asset management in hazardous and non-hazardous areas. It is suitable for commissioning and maintenance staff to manage field instruments with a digital communication interface and to record progress. This tablet PC is designed as an all-in-one solution with a preinstalled driver library and is an easy-to-use, touch-sensitive tool which can be used to manage field instruments throughout their entire life cycle. ▪ Technical Information TI01342S ▪ Operating Instructions BA01709S ▪ Product page: www.endress.com/smt70
Field Xpert SMT77	The Field Xpert SMT77 tablet PC for device configuration enables mobile plant asset management in areas categorized as Ex Zone 1. ▪ Technical Information TI01418S ▪ Operating Instructions BA01923S ▪ Product page: www.endress.com/smt77

Service-specific accessories

Accessories	Description
Applicator	Software for selecting and sizing Endress+Hauser measuring devices: ▪ Choice of measuring devices for industrial requirements ▪ Calculation of all the necessary data for identifying the optimum flowmeter: e.g. nominal diameter, pressure loss, flow velocity and accuracy. ▪ Graphic illustration of the calculation results ▪ Determination of the partial order code, administration, documentation and access to all project-related data and parameters over the entire life cycle of a project. Applicator is available: ▪ Via the Internet: https://portal.endress.com/webapp/applicator ▪ As a downloadable DVD for local PC installation.
W@M	W@M Life Cycle Management Improved productivity with information at your fingertips. Data relevant to a plant and its components is generated from the first stages of planning and during the asset's complete life cycle. W@M Life Cycle Management is an open and flexible information platform with online and on-site tools. Instant access for your staff to current, in-depth data shortens your plant's engineering time, speeds up procurement processes and increases plant uptime. Combined with the right services, W@M Life Cycle Management boosts productivity in every phase. For more information, visit www.endress.com/lifecyclemanagement
FieldCare	FDT-based plant asset management tool from Endress+Hauser. It can configure all smart field units in your system and helps you manage them. By using the status information, it is also a simple but effective way of checking their status and condition. Operating Instructions BA00027S and BA00059S
DeviceCare	Tool to connect and configure Endress+Hauser field devices. Innovation brochure IN01047S
Commubox FXA291	Connects Endress+Hauser field devices with a CDI interface (= Endress +Hauser Common Data Interface) and the USB port of a computer or laptop. Technical Information TI00405C

System components

Accessories	Description
Memograph M graphic data manager	The Memograph M graphic data manager provides information on all the relevant measured variables. Measured values are recorded correctly, limit values are monitored and measuring points analyzed. The data are stored in the 256 MB internal memory and also on a SD card or USB stick. ▪ Technical Information TI00133R ▪ Operating Instructions BA00247R

Supplementary documentation

For an overview of the scope of the associated Technical Documentation, refer to the following:
- *W@M Device Viewer* (www.endress.com/deviceviewer): Enter the serial number from nameplate
- *Endress+Hauser Operations App*: Enter the serial number from the nameplate or scan the 2D matrix code (QR code) on the nameplate

Standard documentation

Brief Operating Instructions

Brief Operating Instructions for the sensor

Measuring device	Documentation code
Proline Promag W	KA01266D

Transmitter Brief Operating Instructions

Measuring device	Documentation code			
	HART	PROFIBUS DP	Modbus RS485	EtherNet/IP
Proline 400	KA01263D	KA01420D	KA01419D	KA01418D

Operating Instructions

Measuring device	Documentation code			
	HART	PROFIBUS DP	Modbus RS485	EtherNet/IP
Promag W 400	BA01063D	BA01234D	BA01231D	BA01214D

Description of device parameters

Measuring device	Documentation code			
	HART	PROFIBUS DP	Modbus RS485	EtherNet/IP
Promag 400	GP01043D	GP01044D	GP01045D	GP01046D

Supplementary device-dependent documentation

Special Documentation

Content	Documentation code
Heartbeat Technology	SD01847D
Display modules A309/A310	SD01793D
Information on Custody Transfer Measurement	SD02038D

Content	Documentation code			
	HART	PROFIBUS DP	Modbus RS485	EtherNet/IP
Web server	SD01811D	SD01813D	SD01812D	SD01814D

Installation Instructions

Content	Comment
Installation instructions for spare part sets and accessories	Documentation code: specified for each individual accessory → 96.

Registered trademarks

HART®
Registered trademark of the FieldComm Group, Austin, Texas, USA

PROFIBUS®
Registered trademark of the PROFIBUS User Organization, Karlsruhe, Germany

Modbus®
Registered trademark of SCHNEIDER AUTOMATION, INC.

EtherNet/IP™
Trademark of ODVA, Inc.

www.addresses.endress.com

Endress+Hauser

People for Process Automation

TAGS:
20-PSH-601
20-PSH-602

PRESSURE AND VACUUM SWITCHES









FEATURES

- Gasketed, Die Cast Aluminum Enclosure with Epoxy Coating
- SPDT Switch Output
- Adjustable Deadband Option
- Sealed, Isolated Metal Bellows Sensors
- Adjustable Pressure Ranges: 30 "Hg Vac to 6000 psi (-1 to 414 bar)

ISO 9001 CERTIFIED COMPANY

OVERVIEW

The J6 is a reliable, sensitive pressure switch, originally designed for instrument air applications in process plants. Its compact design and combination of set-point sensitivity and narrow or optional adjustable deadband, offers cost-saving solutions for a variety of applications.

The J6 is ideally suited for a wide range of industrial processes such as alarm/shutdown and low/high service pressures. OEMs also utilize the J6 in machinery and equipment for threshold protection.



FEATURES

- UL listed and cUL certified
- Optional ATEX or GOST intrinsic safety compliance
- Designed to meet Enclosure Type 4X
- SPDT switch output
- Adjustable deadband option for precise on-off control
- Brass or welded stainless steel bellows sensors
- External manual reset option

SPECIFICATIONS

STORAGE TEMPERATURE	-65° to 160°F (-54 to 71°C)
AMBIENT TEMPERATURE LIMITS	-40° to 160°F (-40 to 71°C); set point typically shifts less than 1% of range for a 50°F (28°C) ambient temperature change
SET POINT REPEATABILITY	Models S126B-S164B, 126-364, 680: ± 1% of adjustable range; models 610-614: ± 1.5% of adjustable range
SHOCK	Set point repeats after 15 G, 10 millisecond duration
VIBRATION	Set point repeats after 2.5 G, 5-500 Hz
ENCLOSURE	Die cast aluminum, epoxy powder coated, gasketed; captive cover screws
ENCLOSURE CLASSIFICATION	Designed to meet Enclosure Type 4X requirements
SWITCH OUTPUT	One SPDT; switch may be wired "normally open" or "normally closed"
ELECTRICAL RATING	15 A 125/250/480 VAC resistive. Electrical switches have limited DC capabilities. Consult factory for additional information.
WEIGHT	Approx. 1 lb., 8 oz. (0.68 kg.)
ELECTRICAL CONNECTION	1/2" NPT (female)
PRESSURE CONNECTION	All models 1/4" NPT (female) except models S126B-S164B: 1/2" NPT (female)

APPROVALS

UE declarations and third-party issued Agency certifications are available for download at www.ueonline.com/prod_approval.

UNITED STATES AND CANADA
UL Listed,
UL 508, file #E42272
cUL Certified
CSA C22.2 No. 14, file #42272
Canadian Registration Number (CRN): Refer to www.ueonline.com/certifications for list of approved models

EUROPEAN UNION
ATEX Directive (94/9/EC)
II 1 G EEx ia IIC T6 **(OPTIONAL - Code M405)**
Tamb = -50°C to +60°C
UL International DEMKO A/S (N.B.# 0539)
Certificate #DEMKO 03 ATEX 0335063
EN 50014, 50020 & 50284

Low Voltage Directive (LVD) (73/23/EC & 93/68/EEC)
Compliant to LVD
Products rated lower than 50 VAC and 75 VDC are outside of the scope of the LVD
The Low Voltage Directive does not apply to products for use in hazardous locations

Pressure Equipment Directive (PED) (97/23/EC)
Compliant to PED
Products rated below 7.5 psi are outside the scope of PED

RUSSIA
Gosgortechnadzor Permit **(OPTIONAL - Code M406)**
OExia IIC T6
Tamb. = -50°C to +60°C
NANIO CCVE Certification Center
Certificate ROSS US.GB05.Bo2933
GOST R 51330.0, 51330.1, 51330.10 & 51330.14

PRESSURE MODEL CHART

Model	Adjustable Set Point Range Low end of range on fall; High end of range on rise		Deadband		Over Range Pressure*		Proof Pressure**	
	psi (unless noted)	bar (unless noted)	psi (unless noted)	bar (unless noted)	psi (unless noted)	bar (unless noted)	psi (unless noted)	bar
Welded 316L stainless steel bellows and 1/2" NPT (female) pressure connection								
S126B	30 "Hg Vac to 0 psi	-1 to 0	0.2 to 0.8 "Hg	6,8 to 27,1 mbar	3	0,2	5	0,3
S134B	30 "Hg Vac to 20 psi	-1 to 1,4	0.2 to 0.8 "Hg	6,8 to 27,1 mbar	20	1,4	25	1,7
S136B	0 to 50" wc	0 to 124,5 mbar	3 to 6 "wc	7,5 to 14,9 mbar	50 "wc	124,5 mbar	5	0,3
S142B	0 to 18	0 to 1,2	4 to 7 "wc	10 to 17,4 mbar	18	1,2	25	1,7
S148B	0 to 40	0 to 2,8	0.1 to 0.4	6,9 to 27,6 mbar	40	2,8	40	2,8
S152B	0 to 50	0 to 3,4	0.1 to 0.5	6,9 to 34,5 mbar	50	3,4	75	5,2
S156B	3 to 100	0,2 to 6,9	0.2 to 0.8	13,8 to 55,2 mbar	100	6,9	125	8,6
S160B	50 to 180	3,4 to 12,4	0.3 to 1	20,7 to 68,9 mbar	180	12,4	180	12,4
S164B	0 to 200	0 to 13,8	0.3 to 2	20,7 to 137,9 mbar	200	13,8	200	13,8
Welded 316L stainless steel bellows and 1/4" NPT (female) pressure connection (Model 680 not recommended for rapid or high cycling pressure changes)								
354	0 to 50	0 to 3,4	1.5 to 2.5	0,1 to 0,2	50	3,4	75	5,2
356	0 to 100	0 to 6,9	2 to 4	0,1 to 0,3	100	6,9	150	10,3
358	0 to 200	0 to 13,8	3 to 5	0,2 to 0,3	200	13,8	250	17,2
360	0 to 250	0 to 17,2	3 to 5	0,2 to 0,3	250	17,2	330	22,8
362	0 to 350	0 to 24,1	2 to 8	0,1 to 0,6	350	24,1	430	29,6
364	0 to 500	0 to 34,5	3 to 9	0,2 to 0,62	500	34,5	575	39,6
680	100 to 1700	6,9 to 117,2	9 to 23	0,6 to 1,6	1700	117,2	2500	172,4
303 stainless steel piston with Buna N O-ring and 303 stainless steel 1/4" NPT (female) pressure connection (not recommended for gas service since drying of the O-ring can allow bleeding of the medium into the atmosphere)								
610	75 to 1000	5,2 to 68,9	30 to 150	2,1 to 10,3	1000	68,9	10,000	689,5
612	125 to 3000	8,6 to 206,8	40 to 250	2,8 to 17,2	3000	206,8	10,000	689,5
614	500 to 6000	34,5 to 413,7	50 to 400	3,4 to 27,6	6000	413,7	10,000	689,5

* **Over Range Pressure**: The maximum pressure that may be applied continuously without causing damage and maintaining set point repeatability.
** **Proof Pressure**: The maximum pressure to which a pressure sensor may be occasionally subjected, which causes no permanent damage. The unit may require calibration (e.g., start-up, testing).

Model	Adjustable Set Point Range Low end of range on fall; High end of range on rise		Deadband		Over Range Pressure*		Proof Pressure**	
	psi (unless noted)	bar (unless noted)	psi (unless noted)	bar (unless noted)	psi (unless noted)	bar (unless noted)	psi (unless noted)	bar
Brass bellows with nickel-plated brass 1/4" NPT (female) pressure connection†; Models 126 and 134 have zinc-plated steel spring exposed to media								
126	30 "Hg Vac to 0 psi	-1 to 0	0.2 to 0.8 "Hg	6,8 to 27,1 mbar	3	0,2	5	0,3
134	30 "Hg Vac to 20 psi	-1 to 1,4	0.2 to 0.8 "Hg	6,8 to 27,1 mbar	20	1,4	25	1,7
136	0 to 50" wc	0 to 124,5 mbar	3 to 6 "wc	7,5 to 14,9 mbar	50 "wc	124,5 mbar	5	0,3
142	0 to 18	0 to 1,2	4 to 7 "wc	10 to 17,4 mbar	18	1,2	25	1,7
148	0 to 40	0 to 2,8	0.1 to 0.4	6,9 to 27,6 mbar	40	2,8	40	2,8
152	0 to 50	0 to 3,4	0.1 to 0.5	6,9 to 34,5 mbar	50	3,4	75	5,2
156	3 to 100	0,2 to 6,9	0.2 to 0.8	13,8 to 55,2 mbar	100	6,9	125	8,6
160	50 to 180	3,4 to 12,4	0.3 to 1	20,7 to 68,9 mbar	180	12,4	180	12,4
Phosphor bronze bellows with nickel-plated brass 1/4" NPT (female) pressure connection; Model 218 has 300 series stainless steel spring exposed to media								
218	30 "Hg Vac to 0 psi	-1 to 0	1 to 2 "Hg	33,9 to 67,7 mbar	0	0	30	2,1
222	0 to 20	0 to 1,4	0.5 to 1	34,5 to 68,9 mbar	20	1,4	30	2,1
224	0 to 30	0 to 2,1	0.5 to 1	34,5 to 68,9 mbar	30	2,1	45	3,1
226	0 to 50	0 to 3,4	0.7 to 1.3	48,3 to 89,6 mbar	50	3,4	75	5,2
230	0 to 100	0 to 6,9	1 to 2	68,9 mbar to 0,1 bar	100	6,9	110	7,6
258	0 to 50	0 to 3,4	1.5 to 2.5	0,1 to 0,2	50	3,4	75	5,2
266	0 to 100	0 to 6,9	2 to 5	0,1 to 0,3	100	6,9	150	10,3
270	0 to 200	0 to 13,8	3 to 5	0,2 to 0,3	200	13,8	250	17,2
272	0 to 250	0 to 17,2	3 to 5	0,2 to 0,3	250	17,2	330	22,8
274	0 to 300	0 to 20,7	4 to 6	0,3 to 0,4	300	20,7	350	24,1

†Several of these models were previously offered with adjustable deadband as J6D. Specify option code 1520 if adjustable deadband is required.

HOW TO ORDER

BUILDING A PART NUMBER

Select a **Type**

Refer to the "Type" section below.

Determine type number based on switch output, enclosure, adjustment and reference.

Fill in the type portion of your part number with the corresponding number.

Select a **Model**

Refer to the "Model Charts".

Determine model based on adjustable range, deadband and proof pressure.

Fill in the model portion of your part number with the corresponding number.

Select an **Option**

Refer to the "Options" section.

Determine option number based on switch output, optional materials or other product enhancements.

Fill in the option portion of your part number with the corresponding number.

Leave "option" portion blank if no options are needed. *FOR MULTIPLE OPTIONS:* Call United Electric Controls.

TYPE	DESCRIPTION
Pressure	**Type J6 -** One SPDT output; epoxy coated enclosure; internal adjustment with no reference dial

SWITCH OPTIONS*

0140	Gold contacts, 1 A 125 VAC resistive
0500	Close deadband, 5 A 125/250 VAC resistive
1070	10 A 125 VDC resistive; deadband and minimum set point will increase
1520	Adjustable deadband, 15 A 125/250/277 VAC resistive. Adjustment wheel changes rise setting only - if adjustment on fall setting is required, use primary adjustment. NOT AVAILABLE ON MODELS 258-274, 354-364, 610-614, 680. NOTE: Must select this option for models previously listed as J6D.
1530	External manual reset, 15 A125/250/480 VAC resistive, latches on rising pressure only
2000	20 A 125/250/480 VAC resistive

SENSOR AND OTHER OPTIONS

M201	Factory set one switch; specify increasing or decreasing pressure and set point
M277	Range indicated on nameplate in kPa or MPa factory selected
M278	Range indicated on nameplate in Kg/cm^2
M405	Intrinsic safety compliance for European Union per ATEX standards
M406	Instrinsic safety compliance for Russia per Gosgortechnadzor standards
M444	Paper ID tag
M446	Stainless steel ID tag & wire attachment
M540	Viton® construction (deadband and low end of range may increase); wetted parts include Viton® O-ring and standard connection material. AVAILABLE ON MODELS 610-614 ONLY
M550	Oxygen service cleaning; alcohol cleaning to remove residue from the process connection
M913	1/4" NPT (female) 316L stainless steel pressure connection. AVAILABLE MODELS S126B-S164B
M914	1/2" NPT (female) 316L stainless steel pressure connection. AVAILABLE MODELS 354-364

***** *All switches have limited DC capabilities. Consult factory for details.*

Viton® is a registered trademark of E.I. duPont de Nemours and Company

DIMENSIONAL DRAWINGS

Dimensional drawings for all models may be found at www.ueonline.com

Internal Set Point Adjustment

Types J6

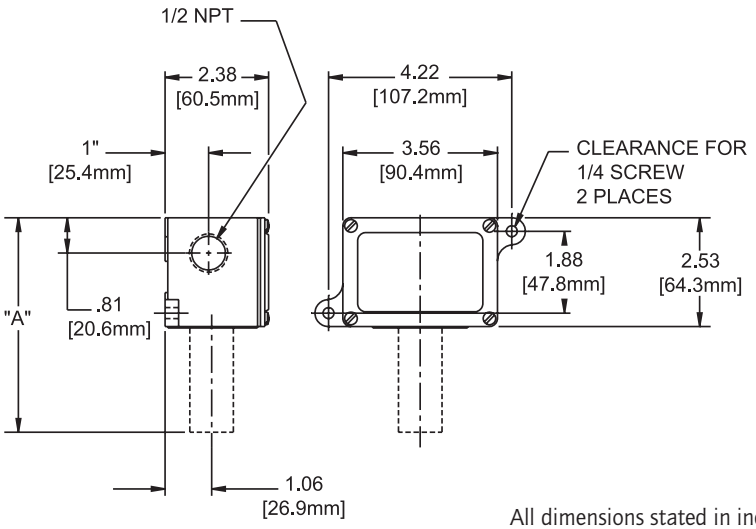

Dimension A			
Models	**Inches**	**mm**	**NPT**
126-160	5.06	128.5	1/4
S126B-S164B	5.47	138.9	1/2
218-230	4.31	109.5	1/4
258-274	4.75	120.7	1/4
354-364	4.78	121.4	1/4
610-614	5.72	145.3	1/4
680	4.97	126.2	1/4

All dimensions stated in inches (millimeters)

Pressure Sensors

Models 218-230

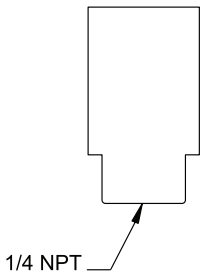

Models 126-160

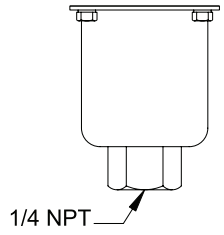

Models S126B-S164B

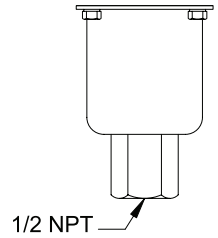

Models 610-614

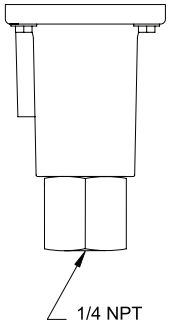

Models 258-274

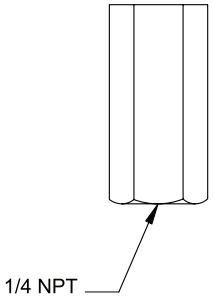

Models 354-364, 680

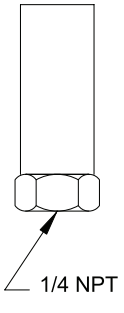

RECOMMENDED PRACTICES AND WARNINGS

United Electric Controls Company recommends careful consideration of the following factors when specifying and installing UE pressure and temperature units. Before installing a unit, the Installation and Maintenance instructions provided with unit must be read and understood.

- To avoid damaging unit, proof pressure and maximum temperature limits stated in literature and on nameplates must never be exceeded, even by surges in the system. Operation of the unit up to maximum pressure or temperature is acceptable on a limited basis (e.g., start-up, testing) but continuous operation must be restricted to the designated adjustable range. Excessive cycling at maximum pressure or temperature limits could reduce sensor life.
- A back-up unit is necessary for applications where damage to a primary unit could endanger life, limb or property. A high or low limit switch is necessary for applications where a dangerous runaway condition could result.
- The adjustable range must be selected so that incorrect, inadvertent or malicious setting at any range point cannot result in an unsafe system condition.
- Install unit where shock, vibration and ambient temperature fluctuations will not damage unit or affect operation. When applicable, orient unit so that moisture does not enter the enclosure via the electrical connection. When appropriate, this entry point should be sealed to prevent moisture entry.
- Unit must not be altered or modified after shipment. Consult UE if modification is necessary.
- Monitor operation to observe warning signs of possible damage to unit, such as drift in set point or faulty display. Check unit immediately.
- Preventative maintenance and periodic testing is necessary for critical applications where damage could endanger property or personnel.
- Electrical ratings stated in literature and on nameplate must not be exceeded. Overload on a switch can cause damage, even on the first cycle. Wire unit according to local and national electrical codes, using wire size recommended in installation sheet.
- Do not mount unit in ambient temp. exceeding published limits.

LIMITED WARRANTY

Seller warrants that the product hereby purchased is, upon delivery, free from defects in material and workmanship and that any such product which is found to be defective in such workmanship or material will be repaired or replaced by Seller (Ex-works, Factory, Watertown, Massachusetts. INCOTERMS); provided, however, that this warranty applies only to equipment found to be so defective within a period of 24 months from the date of manufacture by the Seller. Seller shall not be obligated under this warranty for alleged defects which examination discloses are due to tampering, misuse, neglect, improper storage, and in any case where products are disassembled by anyone other than authorized Seller's representatives. EXCEPT FOR THE LIMITED WARRANTY OF REPAIR AND REPLACEMENT STATED ABOVE, SELLER DISCLAIMS ALL WARRANTIES WHATSOEVER WITH RESPECT TO THE PRODUCT, INCLUDING ALL IMPLIED WARRANTIES OF MERCHANTABILITY OR FITNESS FOR ANY PARTICULAR PURPOSE.

LIMITATION OF SELLER'S LIABILITY

SELLER'S LIABILITY TO BUYER FOR ANY LOSS OR CLAIM, INCLUDING LIABILITY INCURRED IN CONNECTION WITH (I) BREACH OF ANY WARRANTY WHATSOEVER, EXPRESSED OR IMPLIED, (II) A BREACH OF CONTRACT, (III) A NEGLIGENT ACT OR ACTS (OR NEGLIGENT FAILURE TO ACT) COMMITTED BY SELLER, OR (IV) AN ACT FOR WHICH STRICT LIABILITY WILL BE INPUTTED TO SELLER, IS LIMITED TO THE "LIMITED WARRANTY" OF REPAIR AND/OR REPLACEMENT AS SO STATED IN OUR WARRANTY OF PRODUCT. IN NO EVENT SHALL THE SELLER BE LIABLE FOR ANY SPECIAL, INDIRECT, CONSEQUENTIAL OR OTHER DAMAGES OF A LIKE GENERAL NATURE, INCLUDING, WITHOUT LIMITATION, LOSS OF PROFITS OR PRODUCTION, OR LOSS OR EXPENSES OF ANY NATURE INCURRED BY THE BUYER OR ANY THIRD PARTY.

UE specifications subject to change without notice.

Be sure to visit www.ueonline.com for the latest information.

FOR A LIST OF OUR INTERNATIONAL AND DOMESTIC REGIONAL SALES OFFICES PLEASE VISIT OUR WEBPAGE WWW.UEONLINE.COM

UNITED ELECTRIC CONTROLS
180 Dexter Avenue, P.O. Box 9143
Watertown, MA 02471-9143 USA
Telephone: 617 926-1000 Fax: 617 926-2568
http://www.ueonline.com

CP07112000

MATERIAL #	DESCRIPTION
3177949	ASSY-TURBID,W/COLM,120V,SGL,HACH,TU5300
3178030	ASSY-TURBID,W/COLM,24V,SGL,HACH,TU5300
3178031	ASSY-TURBID,W/COLM,120V,SGL,HACH,TU5400
3178032	ASSY-TURBID,W/COLM,24V,SGL,HACH,TU5400

20-FV-324-1/2/3/4
20-HCV-324-1/2/3/4
20-TK-324-1/2/3/4
20-HV-324-1/2/3/4
20-FV-320-1/2/3/4
20-HCV-320-1/2/3/4
20-AE/AIT-320-1/2/3/4
20-FE-320-1/2/3/4

NOZZLE SCHEDULE

NOZZLE	DESCRIPTION	TYPE	SIZE
N01	SAMPLE FROM PERMEATE PIPE	ODT	0.25
N02	PANEL TO DEGASSING COLUMN	ODT	0.25
N03	DEGASSING COLUMN DISCHARGE TO PANEL	ODT	0.25
N04	TO OPEN DRAIN	ODT	0.25
N11	PANEL TO DEGASSING COLUMN	ODT	0.25
N12	DEGASSING COLUMN DISCHARGE TO PANEL	ODT	0.25
N13	DEGASSING COLUMN O/F TO OPEN DRAIN	ODT	0.50
N14	DEGASSING COLUMN TO OPEN DRAIN	ODT	0.25

NOTES:

1. UNLESS NOTED OTHERWISE, DIMENSIONS GIVEN FOR INSTALLATION HAVE THE FOLLOWING TOLERANCES
   DIMENSIONS TO INTERFACE/NOZZLES: ±3/8"
   ANGLES: ±0.5°
2. TURBIDITY PANEL SHIPPING WEIGHT - 24 LB/[10.9 KG]
3. DEGASSING COLUMN SHIPPING WEIGHT - 7 LB/[3.2 KG]
4. TURBIDITY PANEL OPERATING WEIGHT - 25 LB/[11.3 KG]
5. DEGASSING COLUMN OPERATING WEIGHT - 13 LB/[5.9 KG]
6. ALL PIPING & EQUIPMENT SHOWN SHALL BE FULLY SUPPORTED BY SUEZ WT&S PRODUCTION.
7. ALL INTERCONNECTING PIPING SHALL BE FULLY & INDEPENDENTLY SUPPORTED BY OTHERS.
8. FASTENER MATERIAL:
   • SA307 GRADE B HEAVY HEX BOLTS/SA563 GRADE A HEAVY HEX NUTS
9. ALL VALVES & INSTRUMENTS TO BE PROPERLY TAGGED.
10. PIPING MATERIAL:
    • HIGH PRESSURE: N/A
    • LOW PRESSURE: SCH 80 PVC & PE TUBING
11. OPTIMAL SAMPLE FLOW RATE: 200-500 mL/min
12. THE DISTANCE FROM SAMPLE POINT MUST BE LESS THAN 12 FT [3.7 m]
13. FLOW REGULATOR VALVE IS REQUIRED TO CREATE BACK PRESSURE ON THE DRAIN LINE TO AVOID BUBBLES BEING CREATED AND EFFECTING TURBIDITY READINGS.
14. FLOW SET TO 3.3 GPH [210 ml/min]
15. 6FT (1.82m) OF 1/4" TUBING TO BE SHIPPED WITH PANEL FOR CONNECTING TO THE DEGASSING COLUMN ON SITE BY OTHERS.
16. DEGASSING COLUMN OVERFLOW CONNECTION IS TO BE MOUNTED A MINIMUM OF 24 in [610 mm] ABOVE THE TURBIDITY METER.
17. THERE IS NO SET DISTANCE THE TURBIDITY PANEL AND DEGASSING COLUMN SHOULD BE MOUNTED APPART. THIS DRAWING SHOWS THEM 6 in. [152 mm] AS REFERENCE ONLY. THE TOTAL MAXIMUM LENGTH OF TUBING CONNECTING THE PANEL AND DEGASSING COLUMN SHOULD BE UNDER 6 FT [1.82m].
18. ALL DIMENSIONS IN FEET & INCHES [MILLIMETERS]

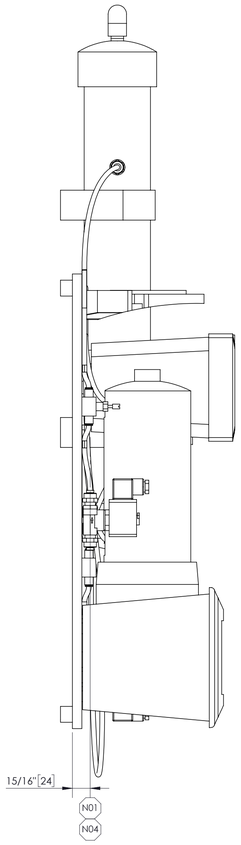

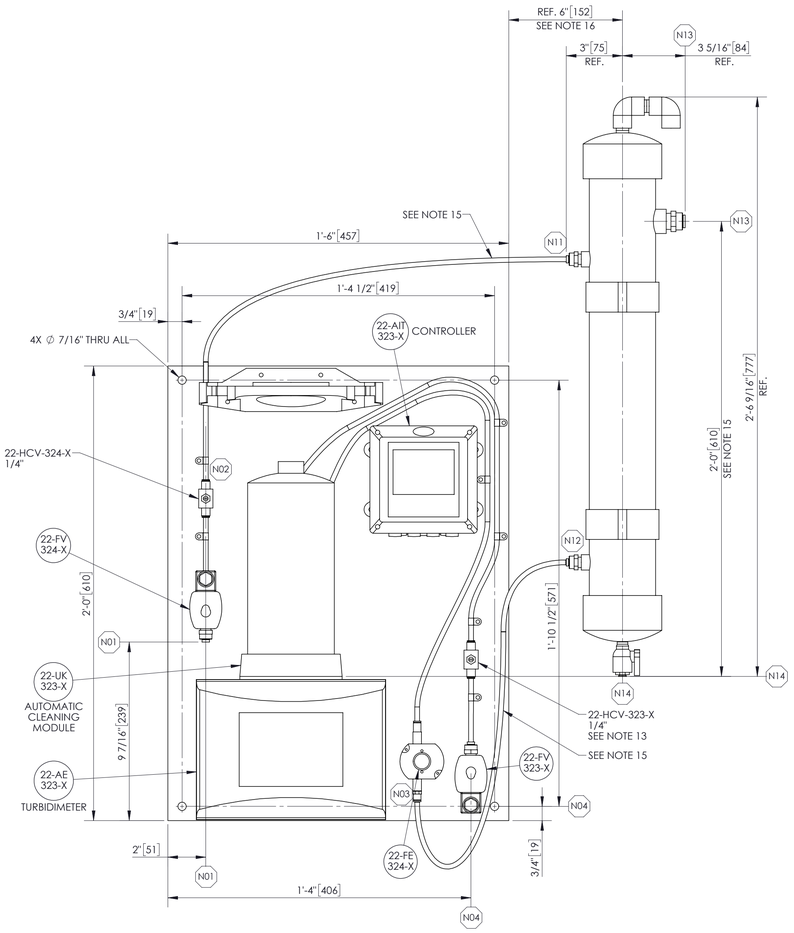

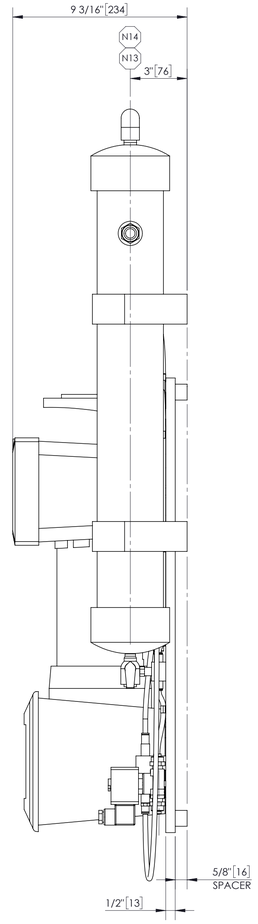

REV	DESCRIPTION	ECO	DWN	APPR	APPR	DATE
C	REDESIGN PANEL LAYOUT WITH AUTO CLEANER MODULE	139576	VC	RJ	SJ	09 Aug 22
B	CONTROLLER MODEL CHANGED TO HACH SC4500	139090	VE	VL	RJ	08 Apr 22
A	INITIAL DESIGN	135720	JR	RP	RJ	07 Apr 20

PROPRIETARY AND CONFIDENTIAL: THIS DRAWING AND ALL INFORMATION AND KNOWLEDGE CONTAINED OR REFERRED HEREIN ARE THE CONFIDENTIAL AND PROPRIETARY PROPERTY OF SUEZ AND AS SUCH ARE INSTRUMENTS OF SERVICE FOR USE SOLELY WITH RESPECT TO THIS PROJECT. THESE INSTRUMENTS OF SERVICE SHALL NOT BE REPRODUCED, TRANSMITTED, DISCLOSED OR USED OTHERWISE IN WHOLE OR IN PART, WITHOUT PRIOR WRITTEN AGREEMENT BY SUEZ AND MUST BE IMMEDIATELY RETURNED OR DESTROYED UPON REQUEST.

TOLERANCES UNLESS NOTED
DECIMALS ANGLES
.X °
.XX FRAC
.XXX

CUSTOMER INFORMATION

ASSY-TURBID,W/COLUMN,SGL,HACH,TU5X00

DRAWING NUMBER	REVISION
1319233	C
REF.:	DOC. OWNER:

PROJECT NO.	PART/MATERIAL NO.	SCALE	SIZE	SHEET
	3177949, 3178030, 3178031, 3178032	1:4	D	1 OF 2

LAST SAVED: Tuesday, August 9, 2022 1:19:35 PM

FILE LOCATION= D:\SWPDM\STSTEMS-HVO-PO\1310000\

8 7 6 5 4 3 2 1

MM# 3177949 - TU5300, W/ 120V SOLENOIDS - EQUIPMENT TABLE

ITEM	QTY.	SAP	DESCRIPTION	U/M
1	1	3177945	ASSY-TURBID,PERM,120VAC,SGL,HACH,TU5300	EA
2	1	3178033	ASSY-DESASSING,PVC,3.00,COLUMN	EA

MM# 3178030 - TU5300, W/ 24V SOLENOIDS - EQUIPMENT TABLE

ITEM	QTY.	SAP	DESCRIPTION	U/M
1	1	3177946	ASSY-TURBID,PERM,24VDC,SGL,HACH,TU5300	EA
2	1	3178033	ASSY-DESASSING,PVC,3.00,COLUMN	EA

MM# 3178031 - TU5400, W/ 120V SOLENOIDS - EQUIPMENT TABLE

ITEM	QTY.	SAP	DESCRIPTION	U/M
1	1	3177947	ASSY-TURBID,PERM,120VAC,SGL,HACH,TU5400	EA
2	1	3178033	ASSY-DESASSING,PVC,3.00,COLUMN	EA

MM# 3178032 - TU5400, W/ 24V SOLENOIDS - EQUIPMENT TABLE

ITEM	QTY.	SAP	DESCRIPTION	U/M
1	1	3177948	ASSY-TURBID,PERM,24VDC,SGL,HACH,TU5400	EA
2	1	3178033	ASSY-DESASSING,PVC,3.00,COLUMN	EA

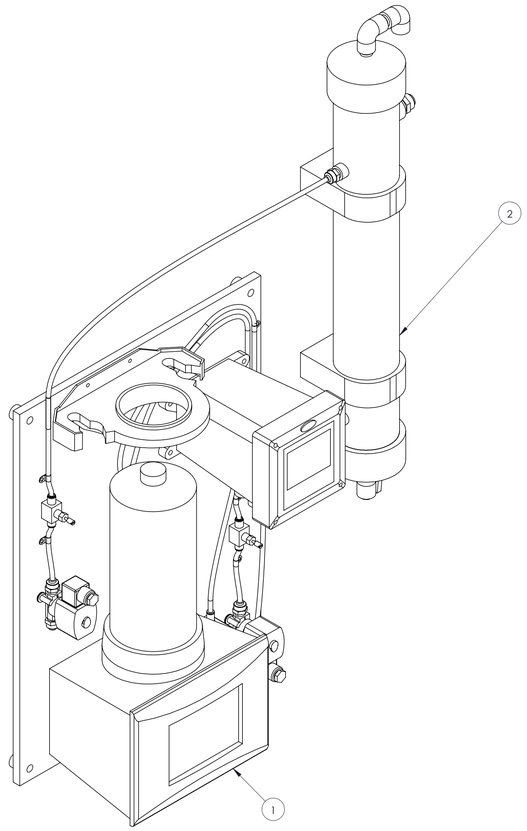

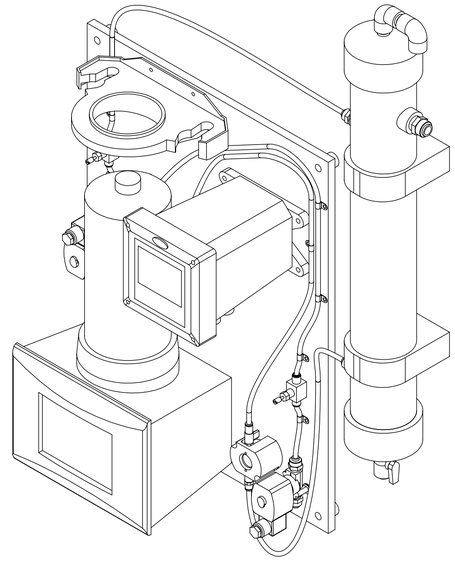

REV	DESCRIPTION	ECO	DWN	APPR	APPR	DATE
C	REDESIGN PANEL LAYOUT WITH AUTO CLEANER MODULE	139576	VC	RJ	SJ	09 Aug 22
B	CONTROLLER MODEL CHANGED TO HACH SC4500	139090	VE	VL	RJ	08 Apr 22
A	INITIAL DESIGN	135720	JR	RP	RJ	07 Apr 20

PROPRIETARY AND CONFIDENTIAL: THIS DRAWING AND ALL INFORMATION AND KNOWLEDGE CONTAINED OR REFERRED HEREIN ARE THE CONFIDENTIAL AND PROPRIETARY PROPERTY OF SUEZ AND AS SUCH ARE INSTRUMENTS OF SERVICE FOR USE SOLELY WITH RESPECT TO THIS PROJECT. THESE INSTRUMENTS OF SERVICE SHALL NOT BE REPRODUCED, TRANSMITTED, DISCLOSED OR USED OTHERWISE IN WHOLE OR IN PART, WITHOUT PRIOR WRITTEN AGREEMENT BY SUEZ AND MUST BE IMMEDIATELY RETURNED OR DESTROYED UPON REQUEST.

TOLERANCES UNLESS NOTED
DECIMALS .X .XX .XXX
ANGLES °
FRAC

suez

CUSTOMER INFORMATION

ASSY-TURBID,W/COLUMN,SGL,HACH,TU5X00

DRAWING NUMBER: 1319233
REVISION: C
REF.:
DOC. OWNER:
PROJECT NO.
PART/MATERIAL NO.: 3177949, 3178030, 3178031, 3178032
SCALE: 1:4
SIZE: D
SHEET: 2 OF 2

LAST SAVED: Tuesday, August 9, 2022 1:19:35 PM

FILE LOCATION: D:\SWPDM\SYSTEMS-IFO\IFO\1310000\

Digital Controller SC4500

Applications

- Wastewater
- Drinking Water
- Industrial Water
- Other

TAG:
20-AIT-320-1/2/3/4



Claros Enabled

Service Protected

Ready for Now. Ready for the Future.

Technologies are advancing rapidly, providing new levels of convenience, accuracy, and efficiency. Which is exactly why the SC4500 Controller from Hach® is designed to integrate easily into your current system while allowing you to upgrade as your capabilities advance, without having to replace inventory. With a wide range of analog and digital connectivity options and the availability of intelligent instrument and data management features, the SC4500 unlocks the future, today.

Easy Adoption

The familiar experience of a modern touchscreen, the ability to use your current Hach sensors, and the same footprint as the SC200, make installation and integration of the SC4500 Controller seamless.

No Time for Downtime

The SC4500's built-in predictive diagnostic software ensures measurement confidence and reduces the risk of unexpected equipment downtime by enabling proactive maintenance planning via MSM, including step-by-step instructions.

The Connectivity Options You Need

The Controller provides local communication to SCADA or a PLC, as well as remote access through a secure, cloud-based connectivity option to integrate with Claros™, the Water Intelligence System from Hach. From analog and advanced digital protocols to wi-fi, cellular or LAN, the SC4500 gives you the flexibility to adapt in a rapidly changing world.

Technical Data*

Description	Microprocessor-controlled and menu-driven controller that operates the sensor
Dimensions	½ DIN - 144 x 144 x 192 mm (5.7 x 5.7 x 7.6 in.)
Weight	3.7 lb (controller only, w/o modules)
Display	3.5-inch TFT color display with capacitive touchpad
Enclosure Rating	UL50E type 4X, IEC/EN 60529–IP 66, NEMA 250 type 4X Metal enclosure with a corrosion-resistant finish
Operating Temperature Range	-20 to 60 °C (-4 to 140 °F) (8 W (AC)/9 W (DC) sensor load) -20 to 45 °C (-4 to 113 °F) (28 W (AC)/20 W (DC) sensor load) Linear derating between 45 and 60 °C (-1.33 W/°C)
Storage Conditions	-20 - 70 °C (-4 - 158 °F), 0 - 95% relative humidity, non-condensing
Altitude	2000 m (6562 ft) maximum
Installation Category	Category II
Pollution Degree	4
Protection Class	I, connected to protective earth
Power requirements	AC controller: 100-240 VAC ±10%, 50/60 Hz; 1 A (28 W sensor load) DC controller: 24 VDC +15% -20%; 2.5 A (20 W sensor load)
Measurements	Two device digital SC connectors
Relays	Two relays (SPDT); Wire gauge: 0.75 to 1.5 mm^2 (18 to 16 AWG) AC controller Maximum switching voltage: 100 - 240 VAC Maximum switching current: 5 A Resistive/1 A Pilot Duty Maximum switching power: 1200 VA Resistive/360 VA Pilot Duty DC controller Maximum switching voltage: 30 VAC or 42 VDC Maximum switching current: 4 A Resistive/1 A Pilot Duty Maximum switching power: 125 W Resistive/28 W Pilot Duty
Communication (optional)	Analog: Five 0-20 mA or 4-20 mA analog outputs on each analog output module Up to two analog Input modules (0-20 mA or 4-20 mA). Each input module replaces a digital sensor input. Digital: Profibus DPV1 module Modbus TCP Profinet IO module Ethernet IP module
Network Connectivity	LAN: Two Ethernet connectors (10/100 Mbps) Cellular: External 4G Wi-Fi
USB Port	Used for data download and software upload. The controller records approximately 20,000 data points for each connected sensor.
Compliance Certifications	CE. ETL certified to UL and CSA safety standards (with all sensor types), FCC, ISED, KC, RCM, EAC, UKCA, SABS, C (Morocco)
Warranty	12 months
Compatible Network Technologies	GSM 3G/4G (e.g. AT&T, T-Mobile, Rogers, Vodafone etc.) CDMA (e.g. Verizon)

**Subject to change without notice.*

Compatible Instruments / Software Version (Release Year)

Amtax sc / V2.30 (2018) or higher

A-ISE sc / V1.02 or higher

AN-ISE sc / V1.08 (2013) or higher

N-ISE sc / V1.02 or higher

Nitratax clear sc, Nitratax eco sc, Nitratax plus sc / V3.13 (2013) or higher

Phosphax sc / V2.30 (2018) or higher

Phosphax sc LR/MR/HR / V1.01 (2018) or higher

TSS sc / V41.73 (2013) or higher

Solitax sc / V2.20 (2013) or higher

TU5300sc, TU5400sc / V1.34 (2017) or higher

SS7 sc (in Bypass) / V1.06 (2006) or higher

Ultraturb sc / V3.06 (2017) or higher

1720E / V2.10 (2006) or higher

Sonatax sc / V1.15 (2016) or higher

CL17sc / V2.7 (2019) or higher

CL10sc / V1.14 (2013) or higher

9184sc, 9185sc, 9187sc* / V2.03 (2013) or higher

Uvas plus sc / V3.01 (2017) or higher

LDO 2 sc* / V1.22 (2013) or higher

3798sc* / V2.03 (2013) or higher

3700sc + Inductive Conductive Digital Gateway 6120800 / V3.00 (2017) or higher

3422sc, Analog 3400 + Contacting Cond. Digital Gateway 6120700 / V3.00 or higher

pHD sc*, pHD-S sc / V3.10 (2016) or higher

1200-S sc* / V2.04 (2013) or higher

pHD analog + Digital Gateway 6120500 / V3.00 (2017) or higher

RC and PC analog sensor + Digital Gateway for conventional analog pH and ORP sensors 6120600 / V3.00 (2017) or higher

8362sc* / V3.00 (2017) or higher

**Hardware Version1 of instrument is not supported*

Dimensions

Panel mounting dimensions

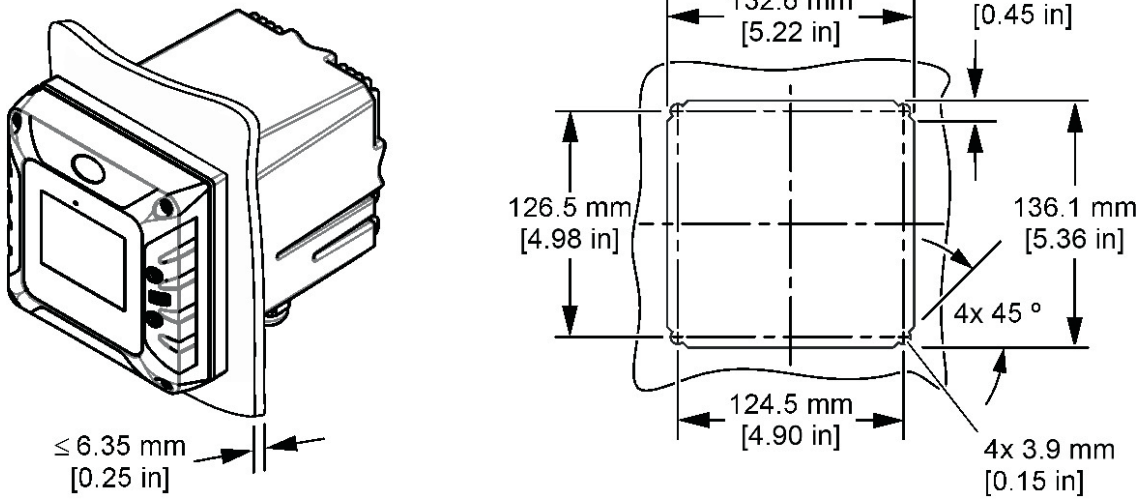

Top and bottom views

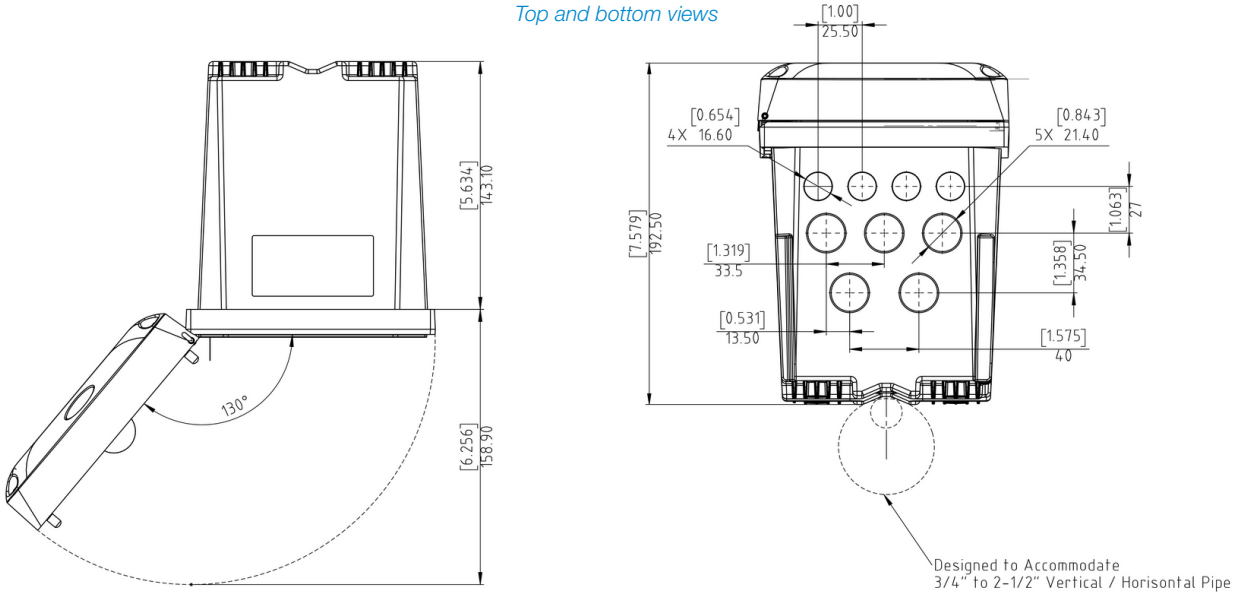

Door Opening Details

Order Information

Controller

LXV525.99A11551	SC4500 Controller, Prognosys, 5x mA Output, 2 digital Sensors, without plug
LXV525.99E11551	SC4500 Controller, Prognosys, 5x mA Output, 2 digital Sensors, US plug
LXV525.99A11541	SC4500 Controller, Prognosys, 5x mA Output, 1 digital Sensor, 1 mA Input, without plug
LXV525.99E11541	SC4500 Controller, Prognosys, 5x mA Output, 1 digital Sensor, 1 mA Input, US plug
LXV525.99AA1551	SC4500 Controller, Claros-enabled, 5x mA Output, 2 digital Sensors, without plug
LXV525.99EA1551	SC4500 Controller, Claros-enabled, 5x mA Output, 2 digital Sensors, US plug
LXV525.99AA1541	SC4500 Controller, Claros-enabled, 5x mA Output, 1 digital Sensor, 1 mA Input, without plug
LXV525.99EA1541	SC4500 Controller, Claros-enabled, 5x mA Output, 1 digital Sensor, 1 mA Input, US plug

Additional configurations are available. Please contact Hach Technical Support or your Hach representative.

Accessories

LXZ524.97.00042	SC4x00 Input Module
LXZ525.99.D0002	SC4x00 mA Output Module (5 Outputs)
LXZ525.99.C0002	SC4500 Ethernet IP Upgrade Kit
LXZ525.99.C0003	SC4500 Modbus TCP/IP Upgrade Kit
LXZ525.99.00026	SC4500 Ethernet Cable M12 to M12 / C1D2, 10 m
LXZ525.99.00017	SC4500 USB Stick
LXZ524.99.00004	SC4x00 UV Protection Screen
LXZ524.99.00005	SC4x00 UV Protection Screen with Sunroof
LXZ524.99.00033	SC4x00 Sunroof Visor
LXZ524.99.00036	SC4x00 Mounting Hardware Sunroof with Visor
LXZ524.99.00037	SC4x00 Sunroof with Visor

Claros Enabled

This instrument connects to Claros, Hach's innovative Water Intelligence System. Claros allows you to seamlessly connect and manage instruments, data, and process – anywhere, anytime. The result is greater confidence in your data and improved efficiencies in your operations. To unlock the full potential of Claros, insist on Claros Enabled instruments.

Service Protected

With Hach Service, you have a global partner who understands your needs and cares about delivering timely, high-quality service you can trust. Our Service Team brings unique expertise to help you maximize instrument uptime, ensure data integrity, maintain operational stability, and reduce compliance risk.

DOC053.53.35316.Nov21

Hach World Headquarters: Loveland, Colorado USA
United States: 800-227-4224 tel 970-669-2932 fax orders@hach.com
Outside United States: 970-669-3050 tel 970-461-3939 fax int@hach.com
hach.com

Printed in U.S.A.
©Hach Company, 2020. All rights reserved.
In the interest of improving and updating its equipment, Hach Company reserves the right to alter specifications to equipment at any time.

HACH® Be Right™

TU5 Series Turbidimeters

TAG: 20-AE-320-1/2/3/4

Applications
- Drinking Water
- Power
- Beverage
- Pharmaceutical



Service Protected

The next standard in the evolution of turbidity

Only the new TU5 Series® Lab & Process Turbidimeters with 360° x 90° Detection® deliver unprecedented confidence that a change in your reading is a change in your water.

Groundbreaking 360° x 90° Detection Technology

The TU5 Series employs a patented optical design that sees more of your sample than any other turbidimeter, delivering the best low level precision and sensitivity while minimizing variability from test to test.

Matching lab and online results

For the first time you will be able to remove the uncertainty of which measurement to trust, thanks to identical 360° x 90° Detection Technology in both instruments.

Everything about turbidity – faster

The TU5 Series dramatically reduces the time needed to get a turbidity measurement you can rely on, with 98% less online sample surface area to clean, sealed vials for calibration, and the elimination of the need for indexing and silicone oil in the lab. Not to mention, a smaller online sample volume means you will detect events almost immediately.

No surprises

Prognosys™ monitors your TU5 Series online instrument, proactively alerting you to maintenance needs before your measurement becomes questionable. And a Hach Service Agreement protects your investment and helps ensure that you stay in compliance and on budget.

USEPA and ISO 7027 reporting: The TU5 Series Turbidimeters apply the instrument design and meet performance criteria established by EPA Approved Hach Method 10258 and ISO 7027-1:2016, making them suitable for regulatory reporting.

HACH®
Be Right™

Technical Data*

TU5200

Light Source	Class 2 laser product, with embedded 650 nm (EPA 0.43 mW) or Class 1 laser product, with embedded 850 nm (ISO), max. 0.55 mW (complies with IEC/EN 60825-1 and to 21 CFR 1040.10 in accordance with Laser Notice No. 50)
Range	EPA: 0 - 700 NTU / FNU / TE/F / FTU 0 - 100 mg/L 0 - 175 EBC ISO: 0 - 1000 NTU / FNU / TE/F / FTU 0 - 100 mg/L 0 - 250 EBC
Accuracy	±2 % plus 0.01 NTU from 0 - 40 NTU; ±10 % of reading from 40 - 1000 NTU based on Formazin primary standard (at 25 °C)
Resolution	0.0001 NTU / FNU / TE/F / FTU / EBC / mg/L
Repeatability	<40 NTU: Better than 1% of reading or ±0.002 NTU on Formazin at 25 °C, whichever is greater >40 NTU: Better than 3.5% of reading on Formazin at 25 °C
Stray Light	<10 mNTU
Units	NTU, FNU, TE/F, FTU, EBC; mg/L if calibrated with Degrees calibration curve
Operating Temperature Range	10 - 40 °C (50 - 104 °F)
Operating Humidity	80% at 30 °C (non condensing)
Sample Temperature	4 - 70 °C (39 - 158 °F)
Storage Conditions	-30 - 60 °C (-22 - 140 °F)
Power Requirements (Voltage)	100 - 240 VAC
Power Requirements (Hz)	50/60 Hz
Certifications	CE compliant US FDA accession number: 1420493-000 EPA version, 1420492-000 ISO version Complies with IEC/EN 60825-1 and to 21 CFR 1040.10 in accordance with Laser Notice No. 50) Australian ACMA Marking
Dimensions (H x W x D)	195 mm x 409 mm x 278 mm
Weight	2.4 kg (5.29 lbs.)
Warranty	1 year

TU5300sc / TU5400sc

Light Source	Class 2 laser product, with embedded 650 nm (EPA 0.43 mW) or Class 1 laser product, with embedded 850 nm (ISO), max. 0.55 mW (complies with IEC/EN 60825-1 and to 21 CFR 1040.10 in accordance with Laser Notice No. 50)
Range	EPA: 0 - 700 NTU / FNU / TE/F / FTU 0 - 100 mg/L 0 - 175 EBC ISO: 0 - 1000 NTU / FNU / TE/F / FTU 0 - 100 mg/L 0 - 250 EBC
Accuracy	±2% or 0.01 NTU from 0 - 40 NTU ±10% of reading from 40 - 1000 NTU based on Formazin primary standard
Resolution	0.0001 NTU / FNU / TE/F / FTU / EBC
Repeatability	Better than 1% of reading or ±0.002 NTU (TU5300) or ±0.0006 NTU (TU5400) on Formazin at 25 °C (77 °F), whichever is greater
Stray Light	<10 mNTU
Units	NTU, FNU, TE/F, FTU, EBC
Signal Average Time	TU5300sc: 30 - 90 seconds TU5400sc: 1 - 90 seconds
Response Time	TU5300sc: T90 <45 seconds at 100 mL/min TU5400sc: T90 <30 seconds at 100 mL/min
Sample Temperature	2 - 60 °C (35 - 140 °F)
Sample Pressure	6 bar (87 psi) maximum, compared to air at sample temperature range from 2 - 40 °C (35.6 - 104 °F)
Sample Flow Rate	100 - 1000 mL/min; optimal flow rate: 200 - 500 mL/min
Operating Temperature Range	0 - 50 °C (32 - 122 °F)
Operating Humidity	Relative humidity: 5 - 95% at different temperatures, non-condensing
Storage Conditions	-40 - 60 °C (-40 - 140 °F)
Enclosure Rating	Electronic compartment IP55; all other functional units IP65 with process head/ACM attached to the TU5300sc/TU5400sc instrument
Certifications	CE compliant US FDA accession number: 1420493-000 EPA version, 1420492-000 ISO version Australian ACMA Marking
Dimensions (H x W x D)	249 mm x 268 mm x 190 mm
Weight	5.95 lbs. (2.7 kg); 11 lbs. (5.0 kg) with all accessories
Warranty	1 year

Subject to change without notice.

Principle of Operation

The TU5 Series turbidimeters measure turbidity by directing a laser into a sample to scatter off suspended particles. The light that is scattered at a 90° angle from the incident beam is reflected through a conical mirror in a 360° ring around the sample before it is captured by a detector.

The amount of light scattered is proportional to the turbidity of the sample. If the turbidity of the sample is negligible, little light will be scattered and detected by the photocell and the turbidity reading will be low. High turbidity, on the other hand, will cause a high level of light scattering and result in a high reading.

The 360° x 90° optics of the TU5 series were optimized for high accuracy at low turbidity ranges and therefore the TU5 does not include ratio technology. Ratio technology is only applicable for high turbidity applications which have interference from color and large particles.

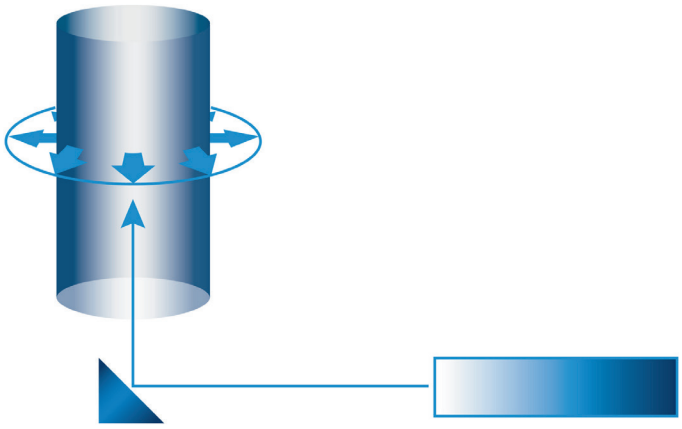

Dimensions

TU5300sc and TU5400sc front view

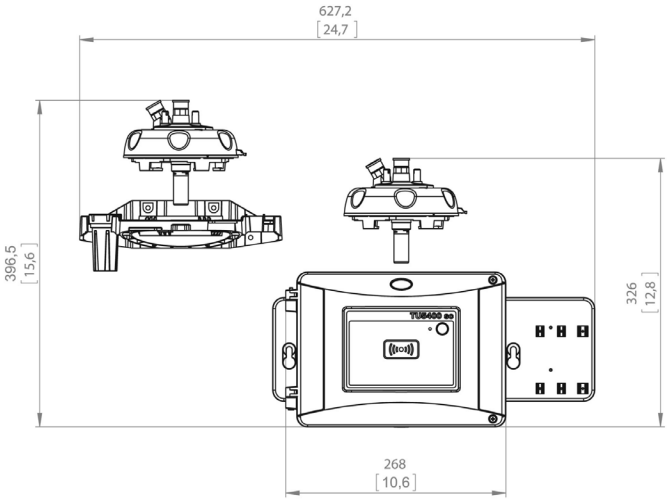

TU5300sc and TU5400sc rear view

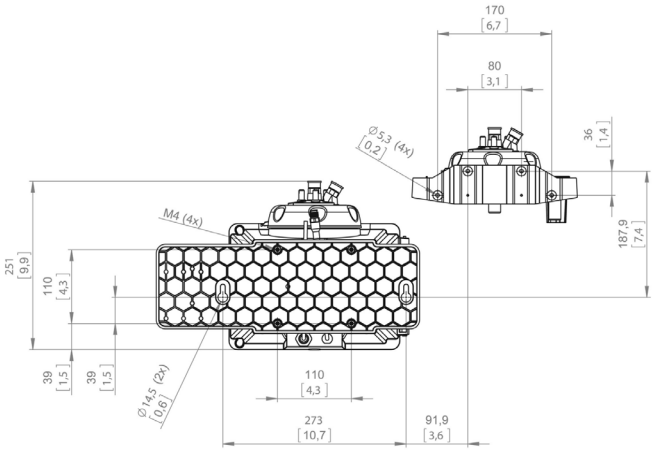

TU5300sc and TU5400sc top view

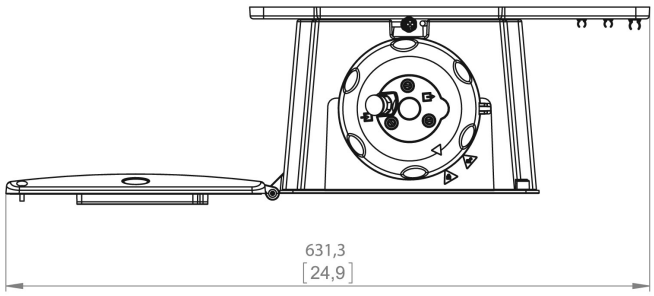

TU5300sc and TU5400sc with automatic cleaning module

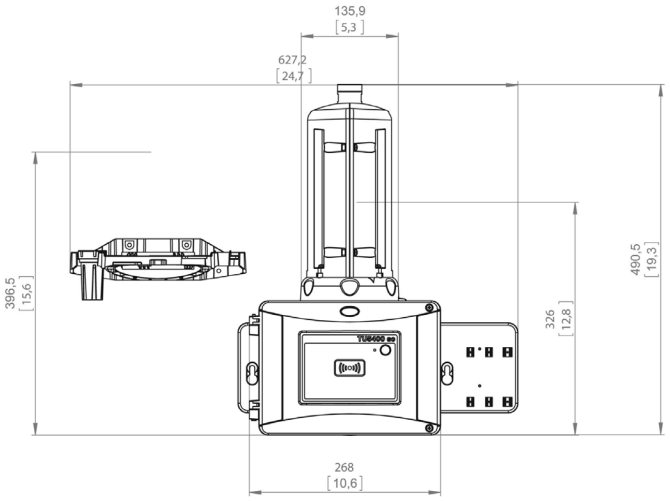

Order Information

TU5200 Benchtop Laser Turbidimeters

LPV442.99.03012	TU5200 Benchtop Laser Turbidimeter with RFID, EPA Version
LPV442.99.01012	TU5200 Benchtop Laser Turbidimeter without RFID, EPA Version
LPV442.99.03022	TU5200 Benchtop Laser Turbidimeter with RFID, ISO Version
LPV442.99.01022	TU5200 Benchtop Laser Turbidimeter without RFID, ISO Version



TU5300sc/TU5400sc Online Laser Turbidimeters

LXV445.99.10112	TU5300sc Low Range Laser Turbidimeter, EPA Version
LXV445.99.10212	TU5400sc Ultra-High Precision Low Range Laser Turbidimeter, EPA Version
LXV445.99.53112	TU5300sc with Flow Sensor, Automatic Cleaning, RFID, and System Check, EPA Version
LXV445.99.53212	TU5400sc with Flow Sensor, Automatic Cleaning, RFID, and System Check, EPA Version

Please note: Other turbidimeter configurations are available and RFID may not be available in all areas. Please contact your local Hach representative.

Please note: An SC controller is required for operation of the TU5300sc or TU5400sc.



Calibration and Verification

LZY835	StablCal® Calibration Set with RFID
LZY898	StablCal® Calibration Set without RFID
LZY901	Glass Rod Secondary Turbidity Standard <0.1 NTU/FNU
LZY834	Replacement Vial for TU5300sc and TU5400sc
LZV946	Sample Vials for TU5200

TU5 Series Accessories

LQV159.97.00002	Automatic Cleaning Module for TU5300sc and TU5400sc
LQV160.99.00002	Flow Sensor for TU5300sc and TU5400sc
LZY876	Desiccant Cartridge for TU5300sc and TU5400sc
LZY907.97.00002	Maintenance Kit for TU5300sc and TU5400sc
LQV157.99.50002	SIP10 Sipper Unit for TU5200
LZY903	Manual Vial Wiper for TU5200, TU5300sc, and TU5400sc

Service Protected

With Hach Service, you have a global partner who understands your needs and cares about delivering timely, high-quality service you can trust. Our Service Team brings unique expertise to help you maximise instrument uptime, ensure data integrity, maintain operational stability, and reduce compliance risk.

DOC050.53.10053.Mar23

HACH COMPANY World Headquarters: Loveland, Colorado USA
United States: 800-227-4224 tel 970-669-2932 fax orders@hach.com
Outside United States: 970-669-3050 tel 970-461-3939 fax int@hach.com
hach.com

Printed in U.S.A.
©Hach Company, 2019. All rights reserved.
In the interest of improving and updating its equipment, Hach Company reserves the right to alter specifications to equipment at any time.

HACH® Be Right™

Dissolved Oxygen: Hach LDO sc Probe, Model 2

Applications
- Wastewater
- Industrial Water
- Drinking Water

TAG:
16-AE-405-1
16-AE-405-2
16-AE-405-3
16-AE-403-1
16-AE-403-2
16-AE-403-3



Service Protected

Claros Enabled

Accurate process monitoring of dissolved oxygen in water for precise aeration control

No Calibration Required

The Hach® LDO sc probe uses luminescent dissolved oxygen technology. Traditional DO probes require DO sensor calibration, which increase maintenance requirements.

No Membranes to Replace

There is virtually no maintenance with Hach's breakthrough luminescent technology. There are no membranes to replace, no electrolyte solution to replenish, and no anode or cathode to clean.

No Missed Cleaning Cycles

The Hach LDO sc probe is equipped with Prognosys, a predictive diagnostic system, that allows you to be proactive in your maintenance by alerting you to upcoming instrument issues. Know with confidence whether changes in your dissolved oxygen level measurements are due to changes in your instrument or your water. To make sure routine cleaning cycles are never missed, the probe offers operators customizable diagnostic alert indicators, ensuring the probe can operate at its maximum performance level.

Customizable service indicators trigger a service message so that a cleaning cycle is never missed.

No Drift

Cutting-edge 3D calibration procedure is conducted prior to shipping, the DO probe will not drift and is more accurate than ever before.

No Complications

Our newest DO probe has a robust design with a smaller footprint allows for easier handling with enhanced durability.

Technical Data*

Range	0 - 20.00 ppm 0 - 20.00 mg/L 0 - 200% saturation
Accuracy	± 0.05 ppm below 5 ppm ± 0.1 ppm above 5 ppm
Response Time	T_{90} < 40 s T_{95} < 60 s
Resolution	0.01 ppm (mg/L) 0.1% saturation
Repeatability	± 0.1 ppm (mg/L)

Flow Rate	None required
Sensor Immersion Depth	Pressure Limits at 345 kPa 345 kPa (50 psi), maximum; accuracy may not be maintained at this depth
Transmission Distance	1000 m (3280 ft.) maximum when used with a termination box
Cable Length	10 m (options with 30 m, 60 m, 100 m)
Dimensions (D x L)	48.25 mm x 254 mm (1.9 in x 10 in)
Weight	1 kg (2.2 lbs), probe only

**Subject to change without notice.*

Principle of Operation

The Hach LDO sc sensor is coated with a luminescent material. Blue light from an LED is transmitted to the sensor surface. The blue light excites the luminescent material. As the material relaxes it emits red light. The time it takes for the red light to be emitted is measured. Between the flashes of blue light, a red LED is flashed on the sensor and used as an internal reference. Increased oxygen in the sample decreases the time it takes for the red light to be emitted. The time measurements correlate to the oxygen concentration.

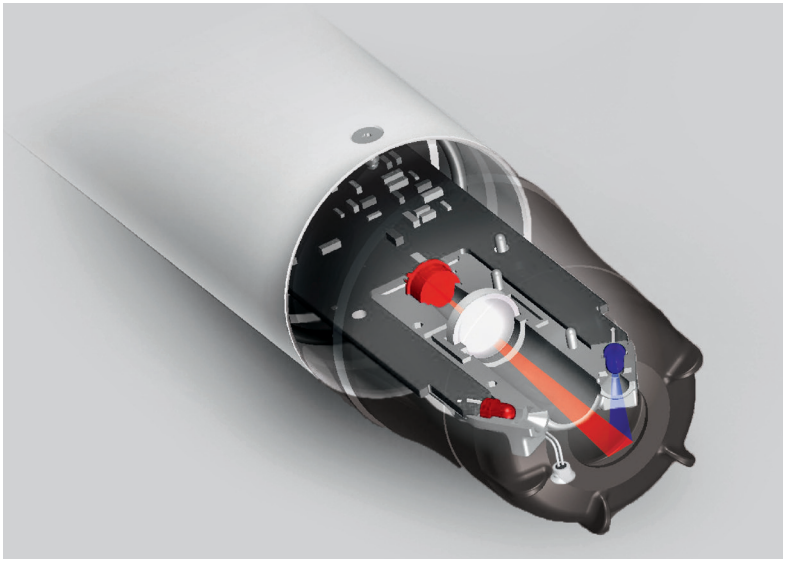

Dimensions

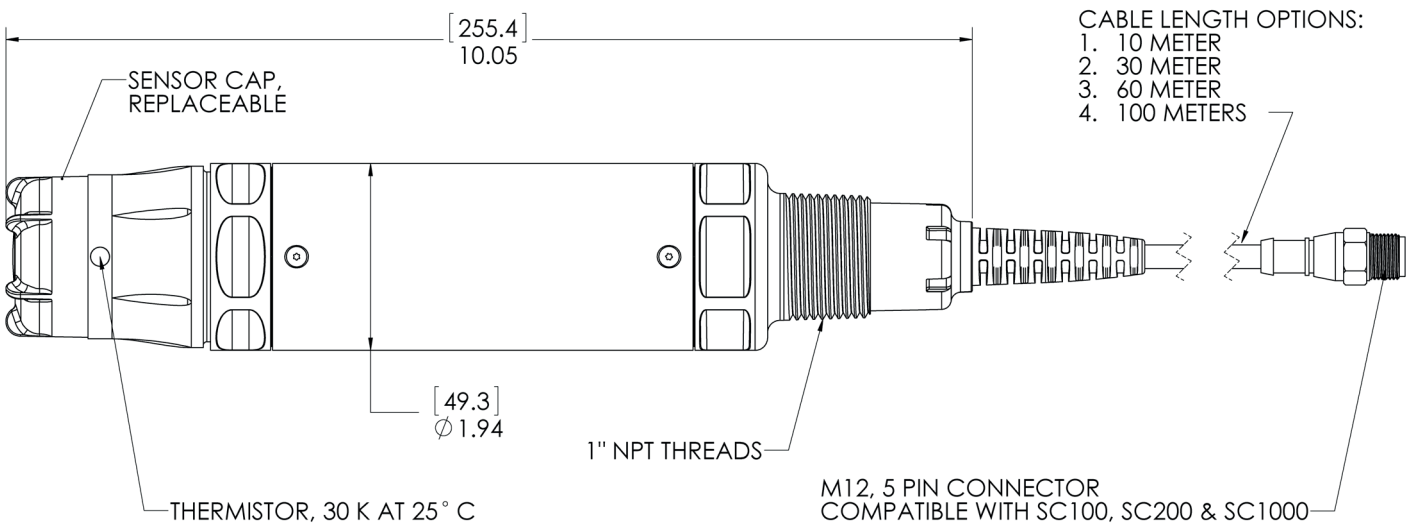

Installation / Mounting

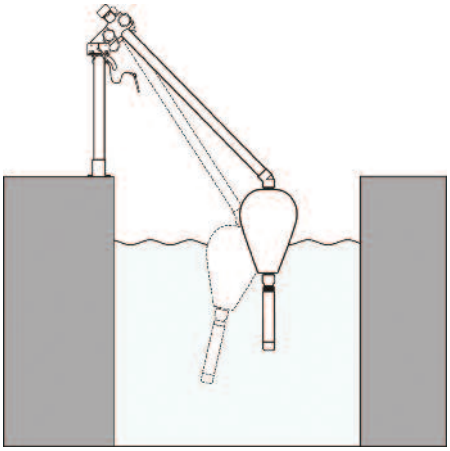

Float Mount Kit

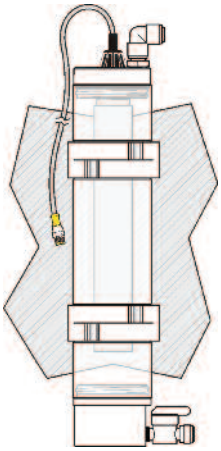

Flow Cell

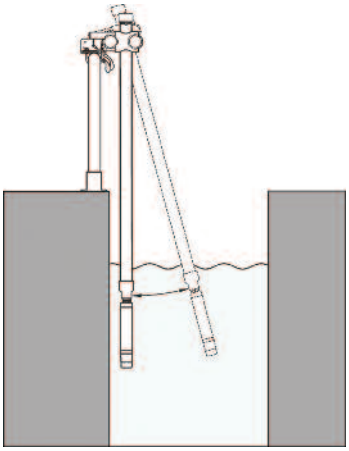

Pole Mount Kit

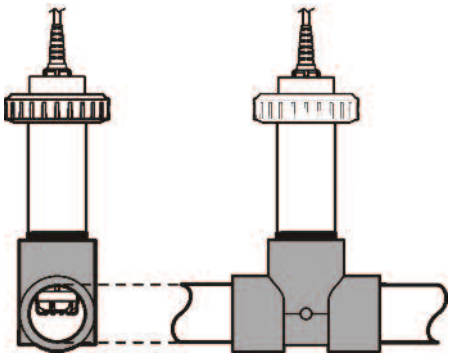

Union Mount Kit

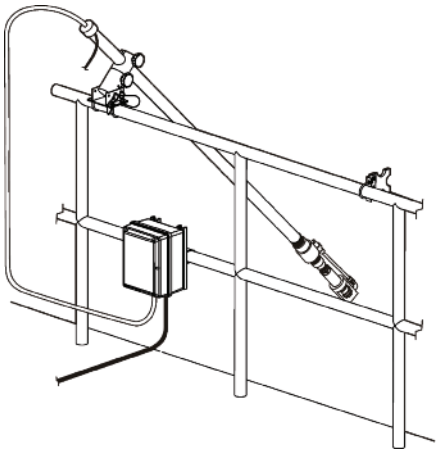

Air Blast Cleaning System

Order Information

Sensor

9020000	Hach LDO 2 sc Dissolved Oxygen Probe
9020000-UPGRADE	Hach LDO 2 sc Dissolved Oxygen Probe, with Mounting Conversion Adapter

Please note that a Hach SC controller is required to operate the LDO sc Sensor, controller must be purchased separately.

Accessories

5867000	Digital Termination Box
5796000	Digital Extension Cable, 7.7 m (25 ft.)
5796100	Digital Extension Cable, 15 m (50 ft.)
5796200	Digital Extension Cable, 30 m (100 ft.)
6860000	High Output Air Blast Cleaning System, 115 VAC
6860100	High Output Air Blast Cleaning System, 230 Vac
9253500	Air Blast Hardware Components

Replacements and Parts

9021100	LDO sc Model 2 Sensor Cap Replacement Kit

Mounting Kits

9253000	Pole Mount Kit, PVC
9253100	Ball Float Mount Kit, PVC
9257000	Union Mount Kit, PVC
9253400	Mounting Conversion Adapter, LDO sc Model 1 to LDO sc Model 2
7300800	1" NPT sc Sensors Flow Cell

Controllers

SC4500 Digital Controllers

LXV525.99A11551	SC4500 Controller, Prognosys, 5x mA Output, 2 digital Sensors, without plug
LXV525.99A11541	SC4500 Controller, Prognosys, 5x mA Output, 1 digital Sensor, 1 mA Input, without plug
LXV525.99A11501	SC4500 Controller, Prognosys, 5x mA Output, 1 digital Sensor, 100-240 VAC, without power cord

SC200 Digital Controllers

LXV404.99.00512	SC200 controller, 2 channel, digital & pH/DO
LXV404.99.00522	SC200 controller, 2 channel, digital & Conductivity
LXV404.99.00532	SC200 controller, 2 channel, digital & Flow

SC1000 Digital Controllers

LXV402.99.00002	SC1000 Display Module
LXV400.99.1R572	SC1000 Probe Module, 4 Sensors, 4x 4-20mA Out, 4x 4-20mA In, 4x Relays, 100-240 V AC with Conduits
LXV400.99.1B572	SC1000 Probe Module, 4 Sensors, 4x 4-20mA Out, 4x 4-20mA In, Modbus® RS485, 4x Relays, 100-240 V AC with Conduits
LXV400.99.1F572	SC1000 Probe Module, 4 Sensors, 4x 4-20mA Out, 4x 4-20mA In, Profibus® DP, 4x Relays, 100-240 V AC with Conduits
LXV400.99.1R582	SC1000 Probe Module, 6 Sensors, 4x 4-20mA Out, 4x 4-20mA In, 4x Relays, 100-240 V AC with Conduits

Claros Enabled

This instrument connects to Claros, Hach's innovative Water Intelligence System.
Claros allows you to seamlessly connect and manage instruments, data, and process – anywhere, anytime. The result is greater confidence in your data and improved efficiencies in your operations. To unlock the full potential of Claros, insist on Claros Enabled instruments.

Service Protected

With Hach Service, you have a global partner who understands your needs and cares about delivering timely, high-quality service you can trust. Our Service Team brings unique expertise to help you maximize instrument uptime, ensure data integrity, maintain operational stability, and reduce compliance risk.

HACH®

World Headquarters: Loveland, Colorado USA | hach.com

United States **800-227-4224** fax: 970-669-2932 email: orders@hach.com
Outside United States **970-669-3050** fax: 970-461-3939 email: int@hach.com

©Hach Company, 2022. All rights reserved.
In the interest of improving and updating its equipment, Hach Company reserves the right to alter specifications to equipment at any time.

DOC053.53.35335.May22

9253000, 9253100, 9254000, 9254100, 9255000, 9255100, 9256000, 9246100

Mounting hardware for the sensors:
16-AE-403-1/2/3
16-AE-402-1/2/3
16-AE-405-1/2/3

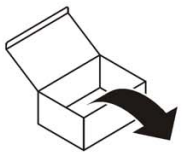

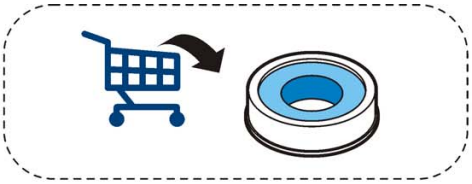

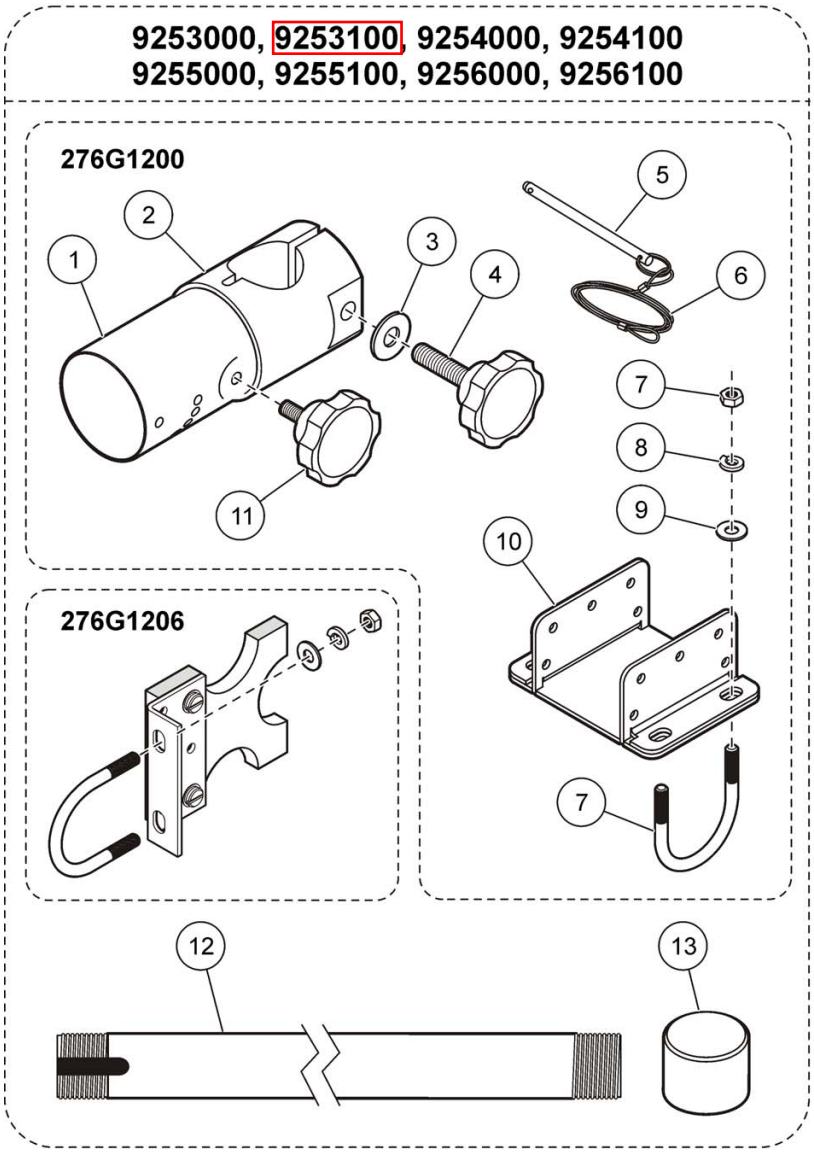

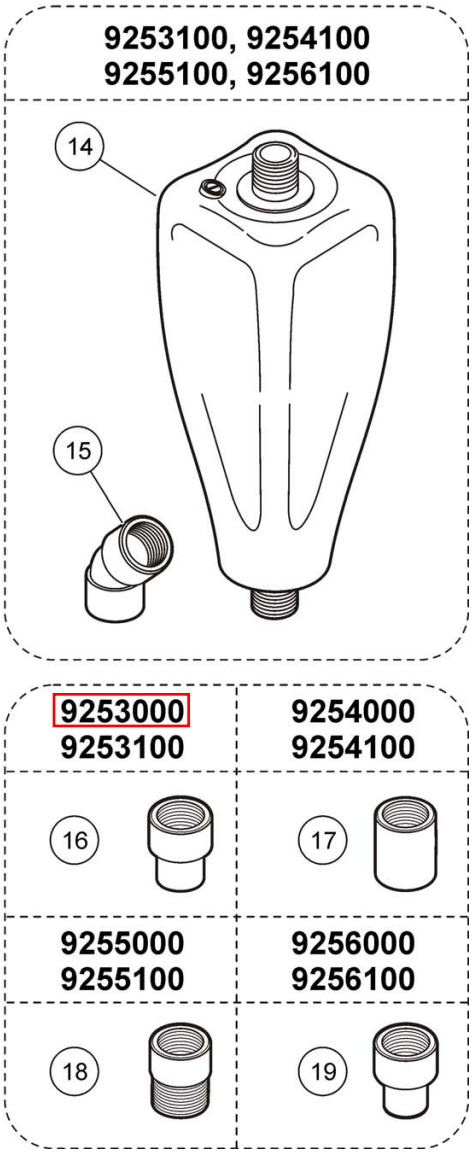

1	9110800	**6**	9H1394	**11**	9092700	**16**	9253200
2	9110900	**7**	9H1000	**12**	9256300-095	**17**	9254200
3	SE 966	**8**	8H1337	**13**	1P2116-107	**18**	9255200
4	9092800	**9**	8H1347	**14**	5792002	**19**	9256200
5	9H1285-040	**10**	276A3A1203	**15**	1P2106-107		

9253000, 9253100, 9254000, 9254100, 9255000, 9255100, 9256000, 9256100

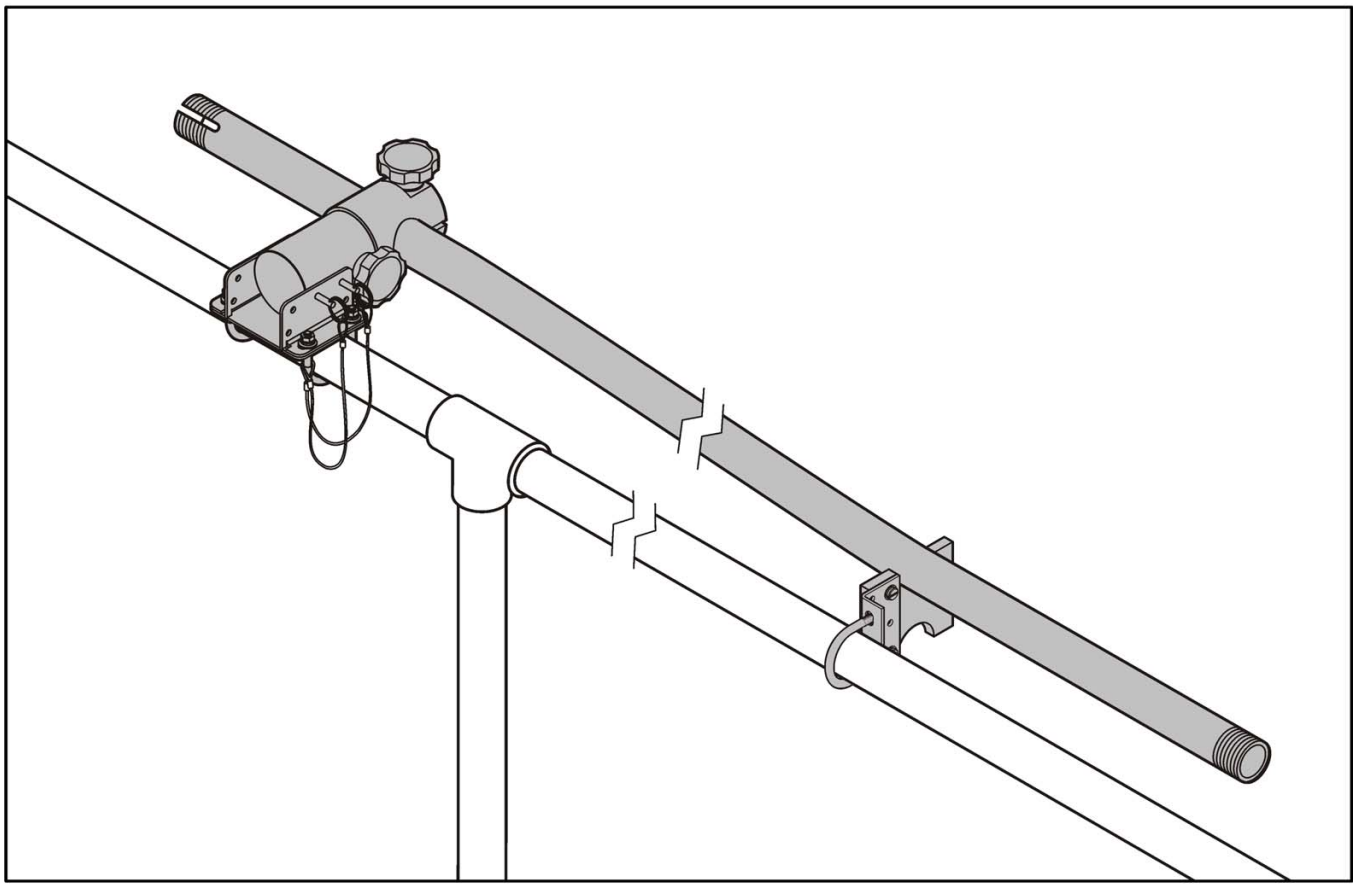

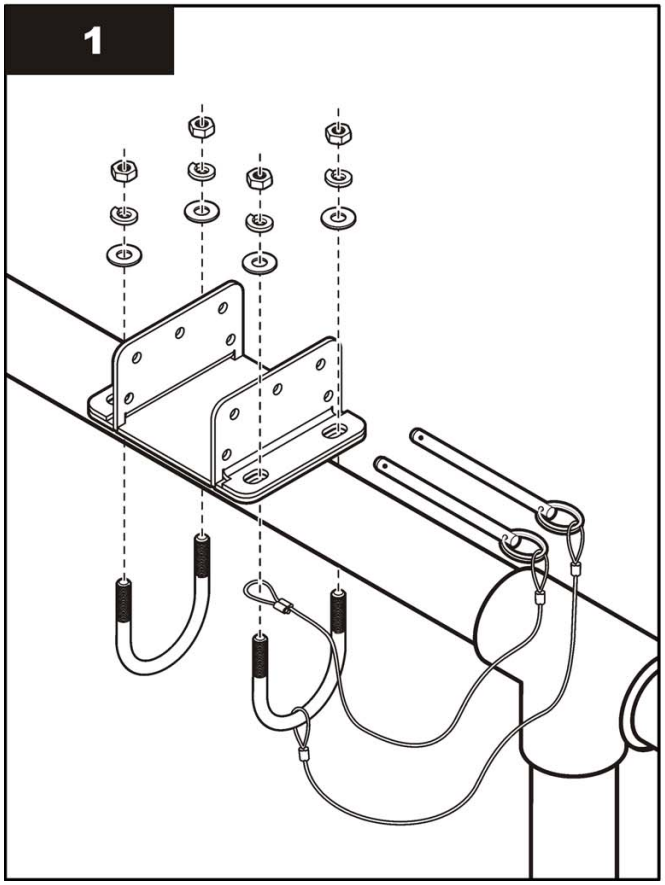

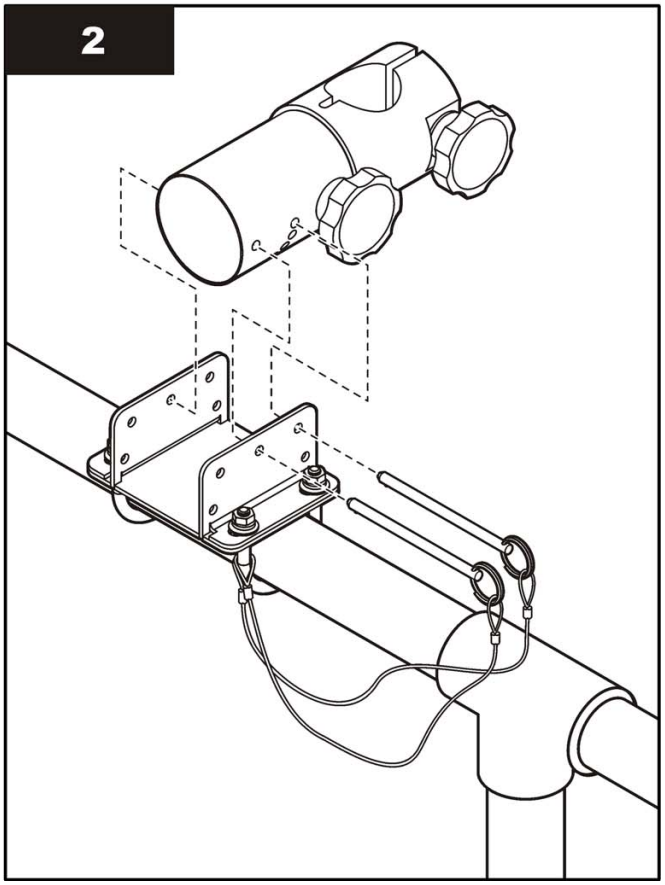

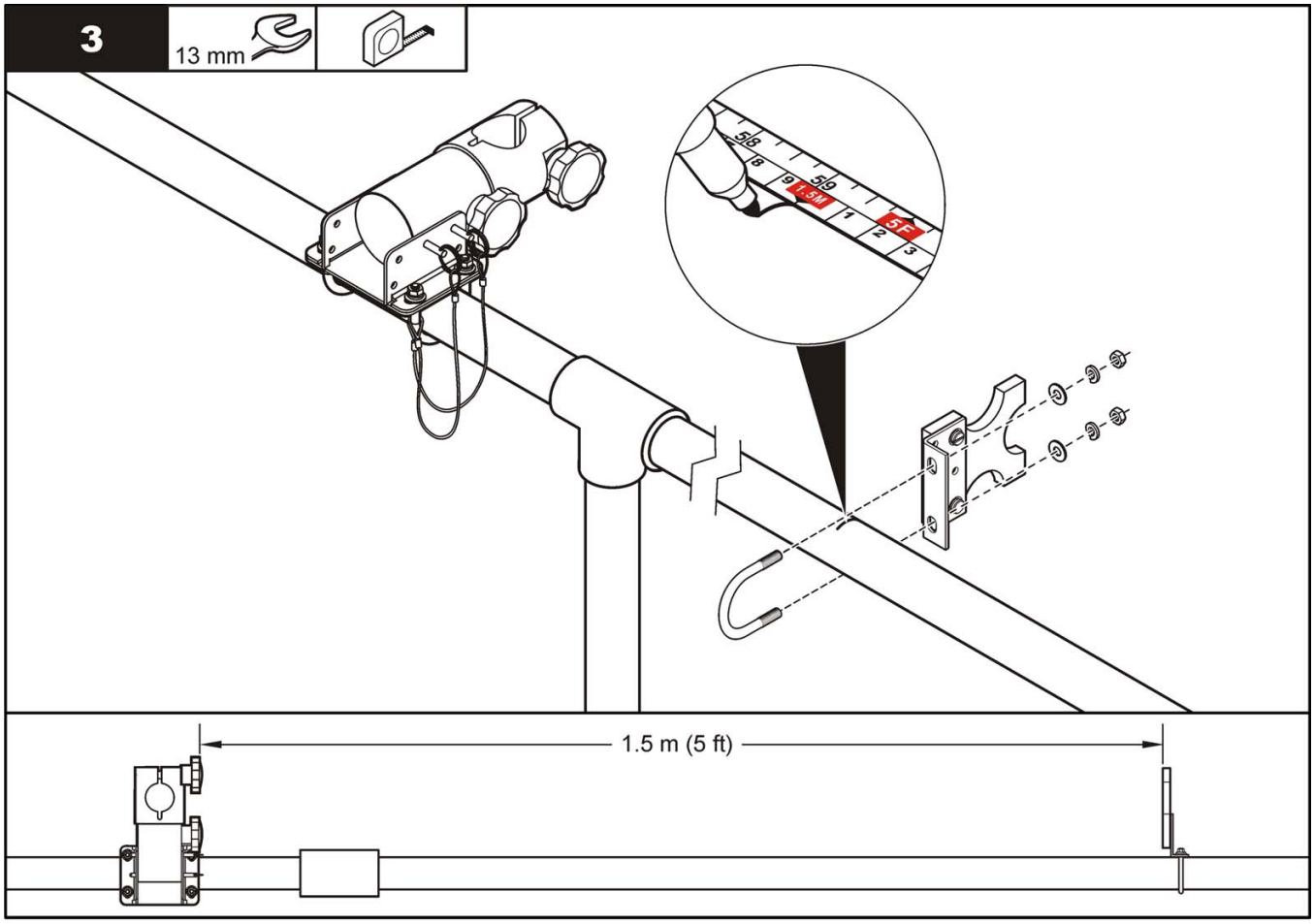
3
13 mm
1.5 m (5 ft)

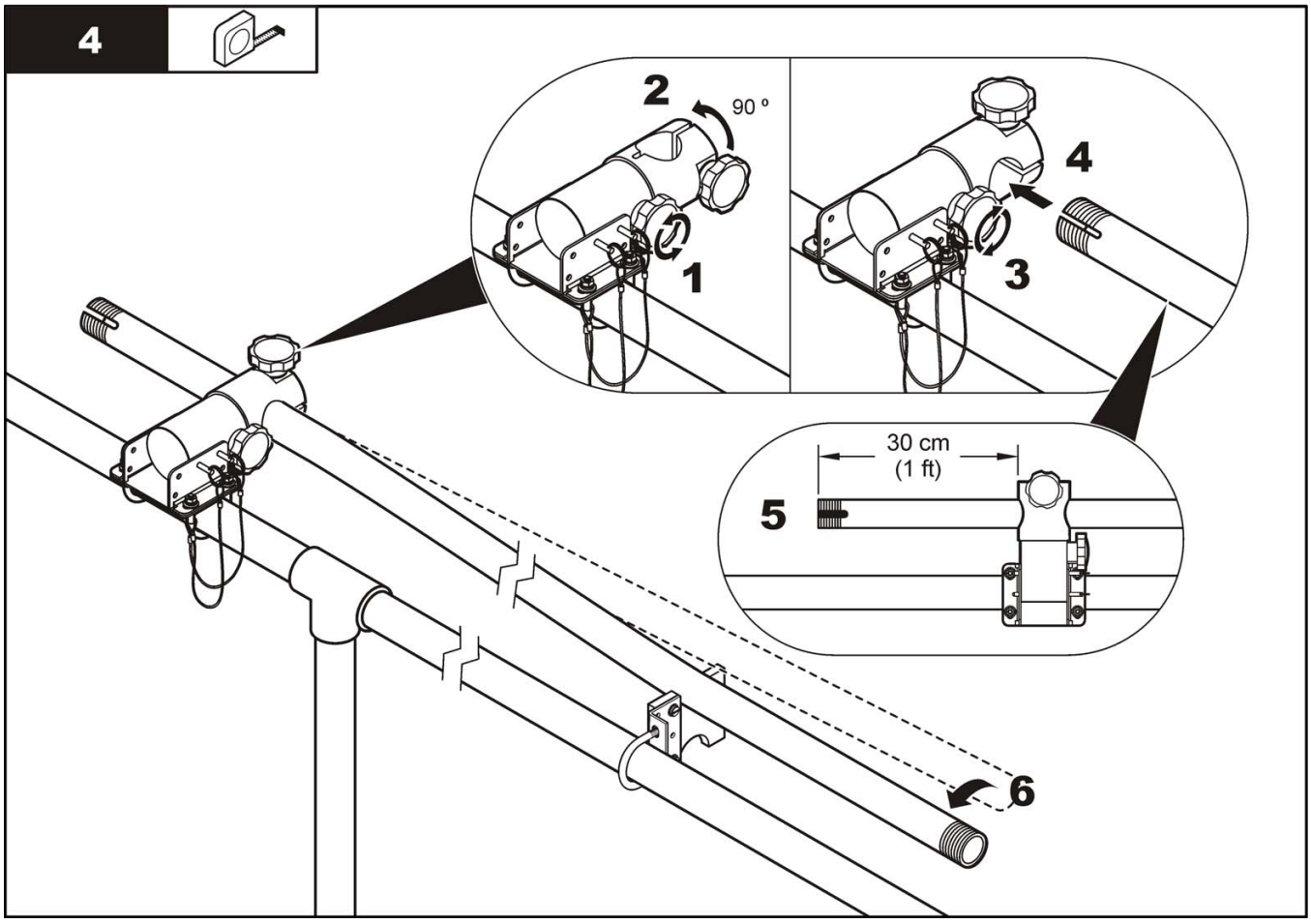
4
2
90 °
1
3
4
30 cm
(1 ft)
5
6

9253100, 9254100, 9255100, 9256100

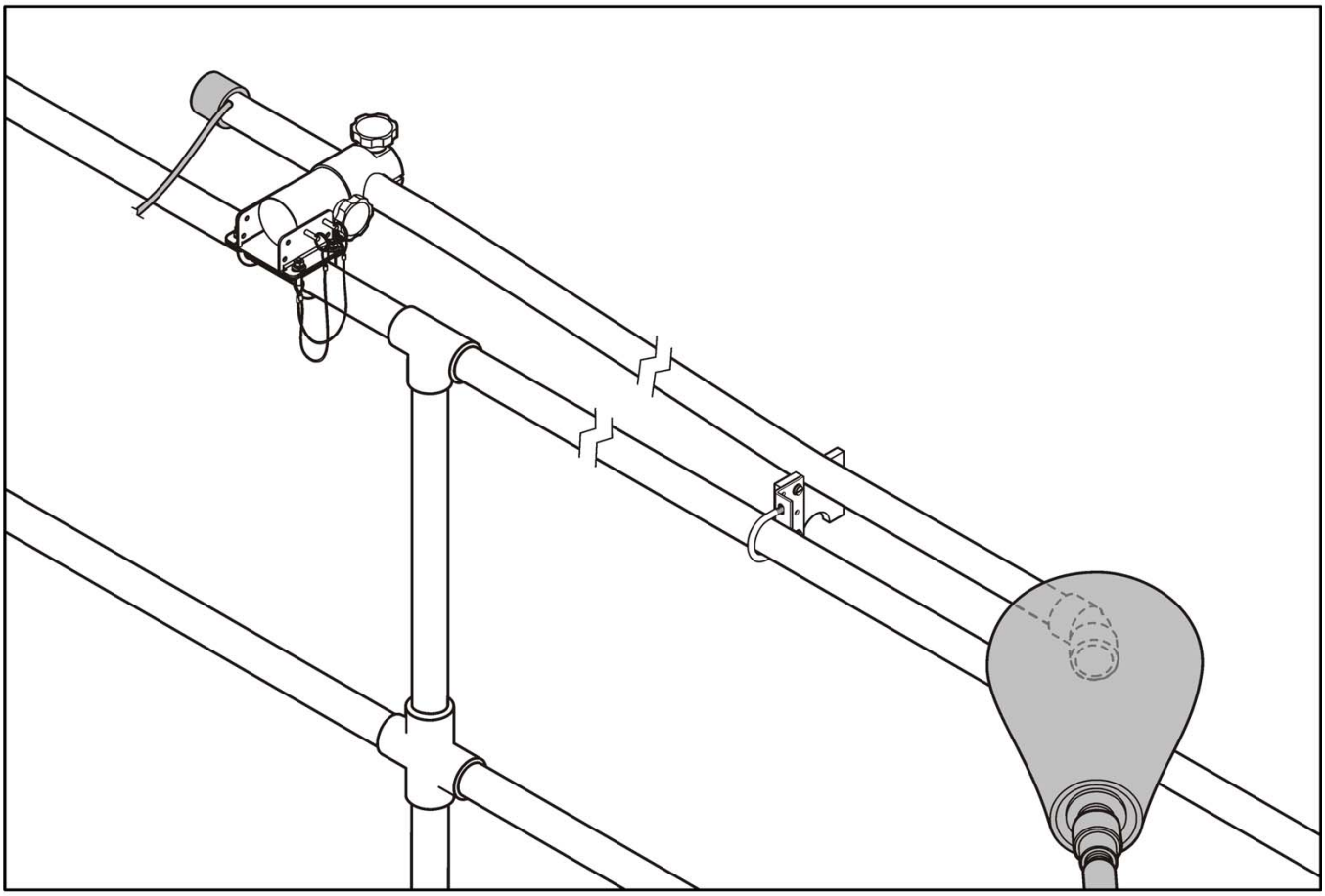

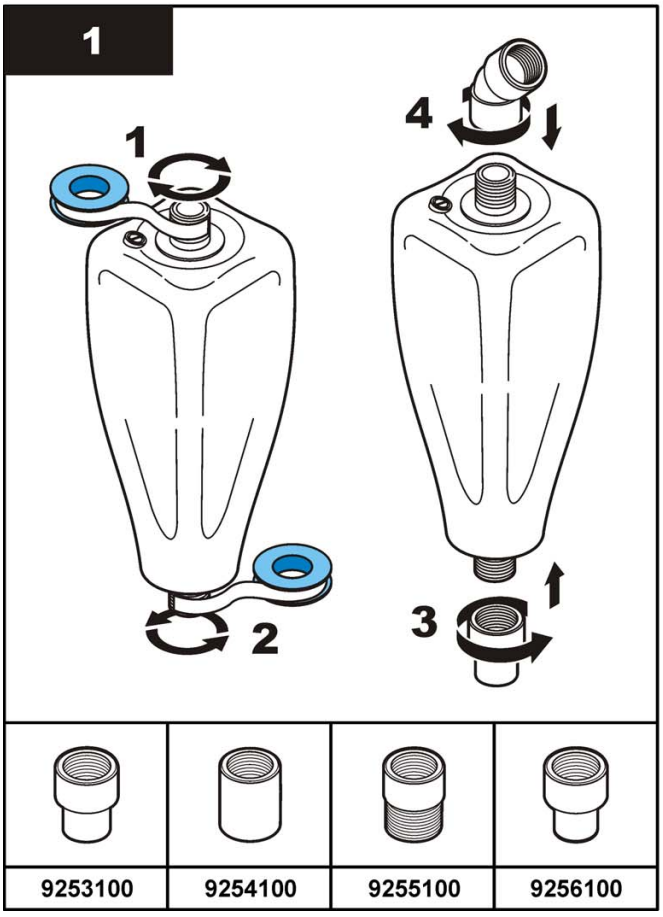

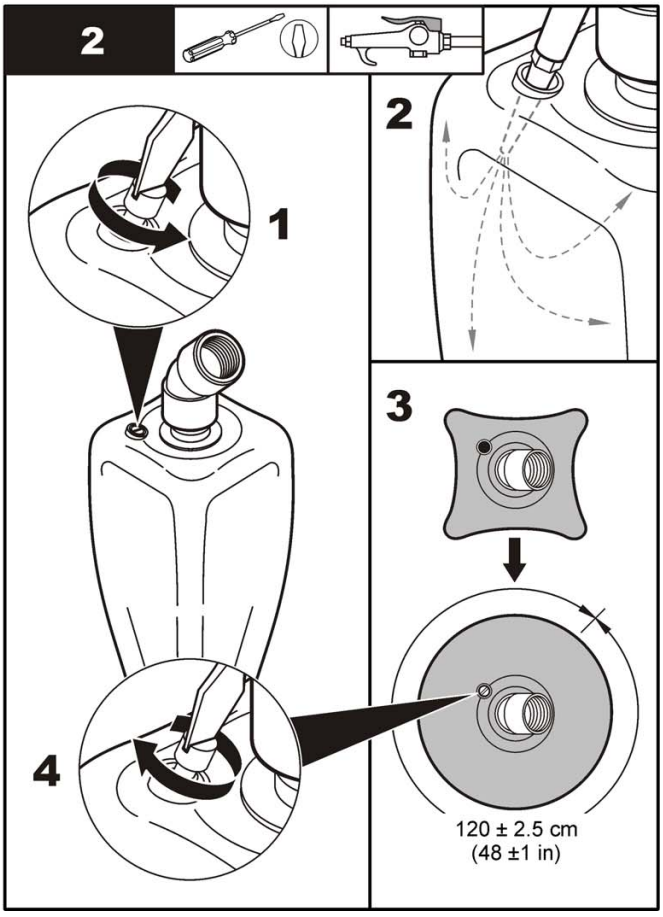

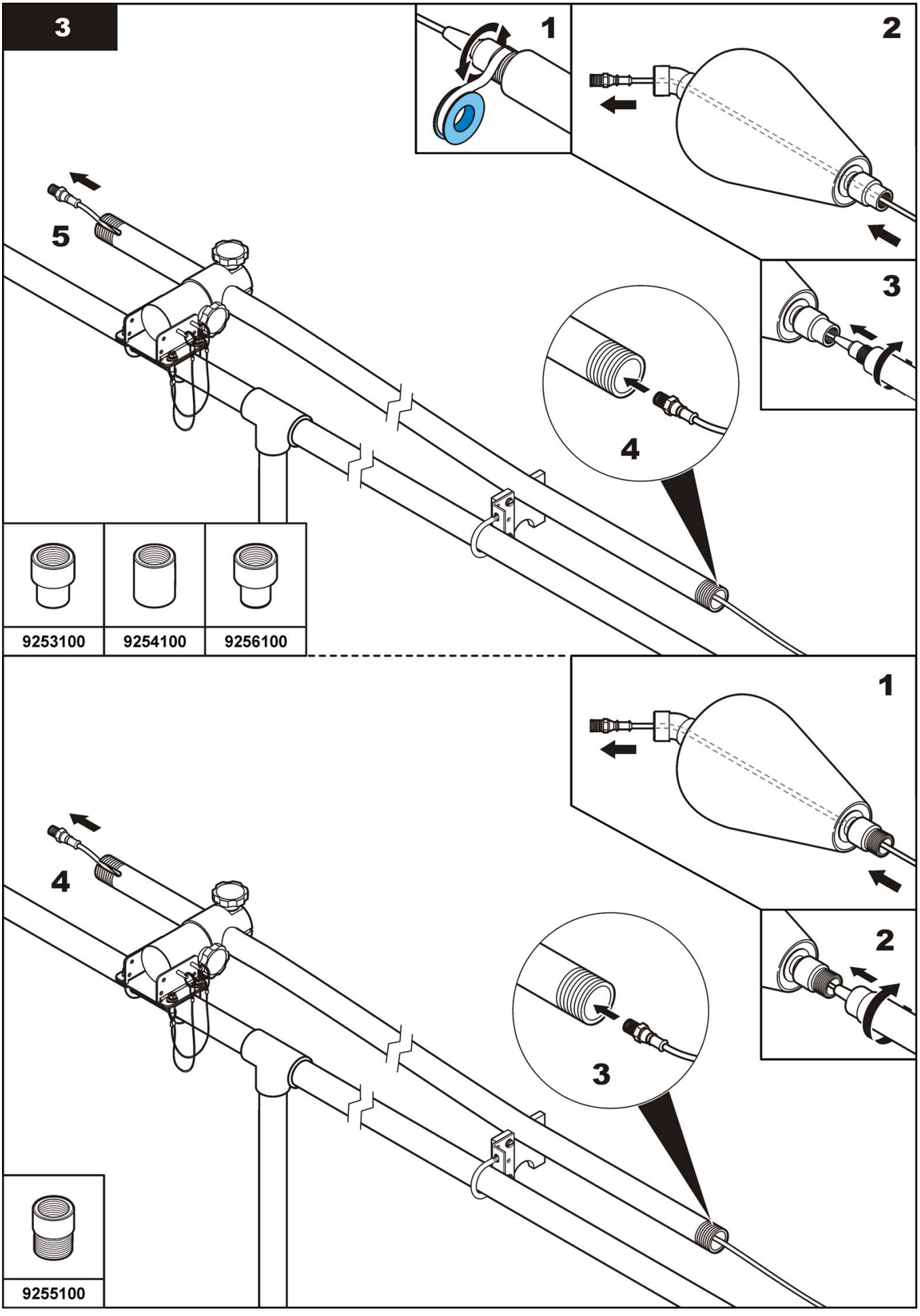
3
1
2
5
3
4
9253100
9254100
9256100
1
4
2
3
9255100

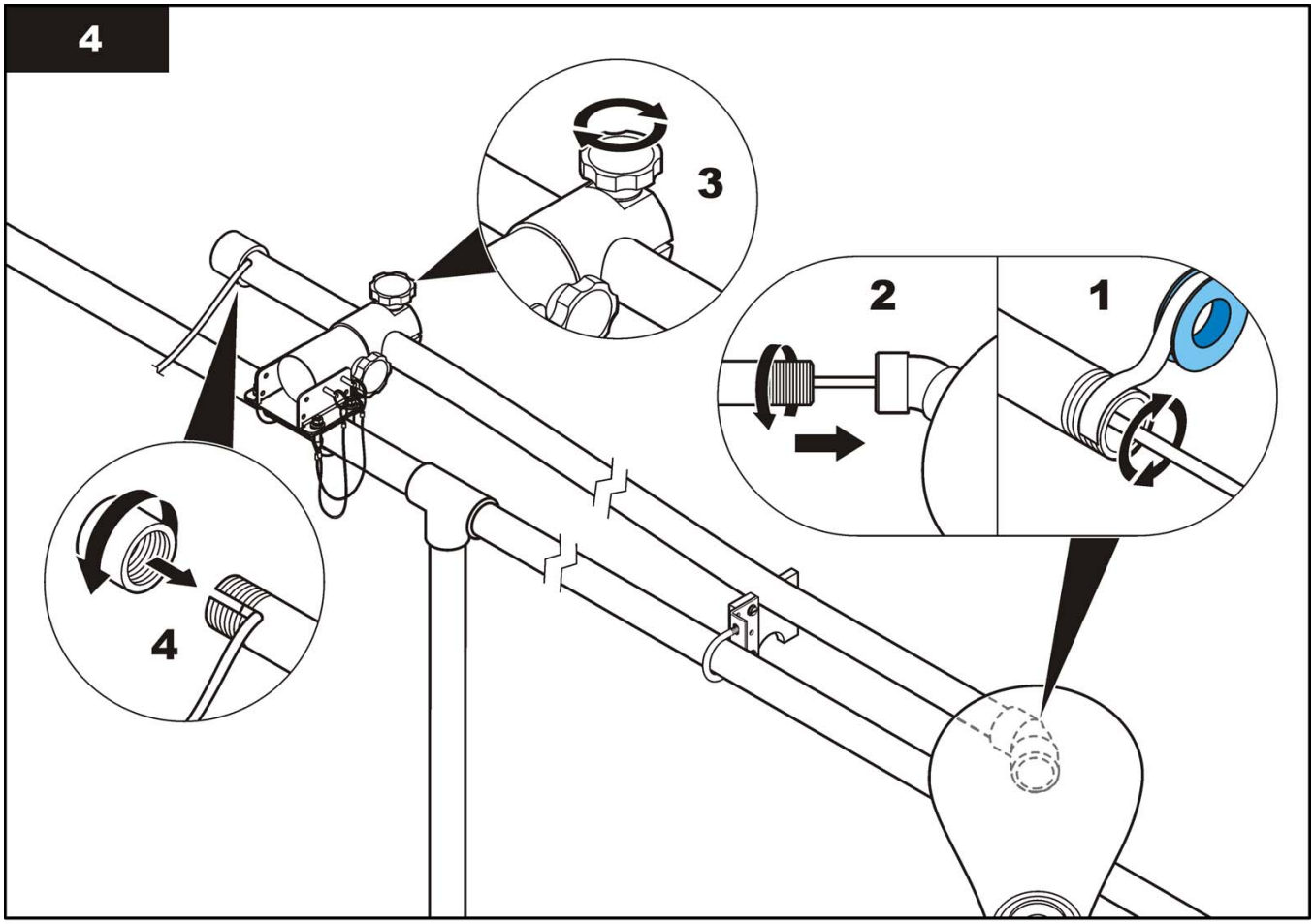
4
3
2
1
4

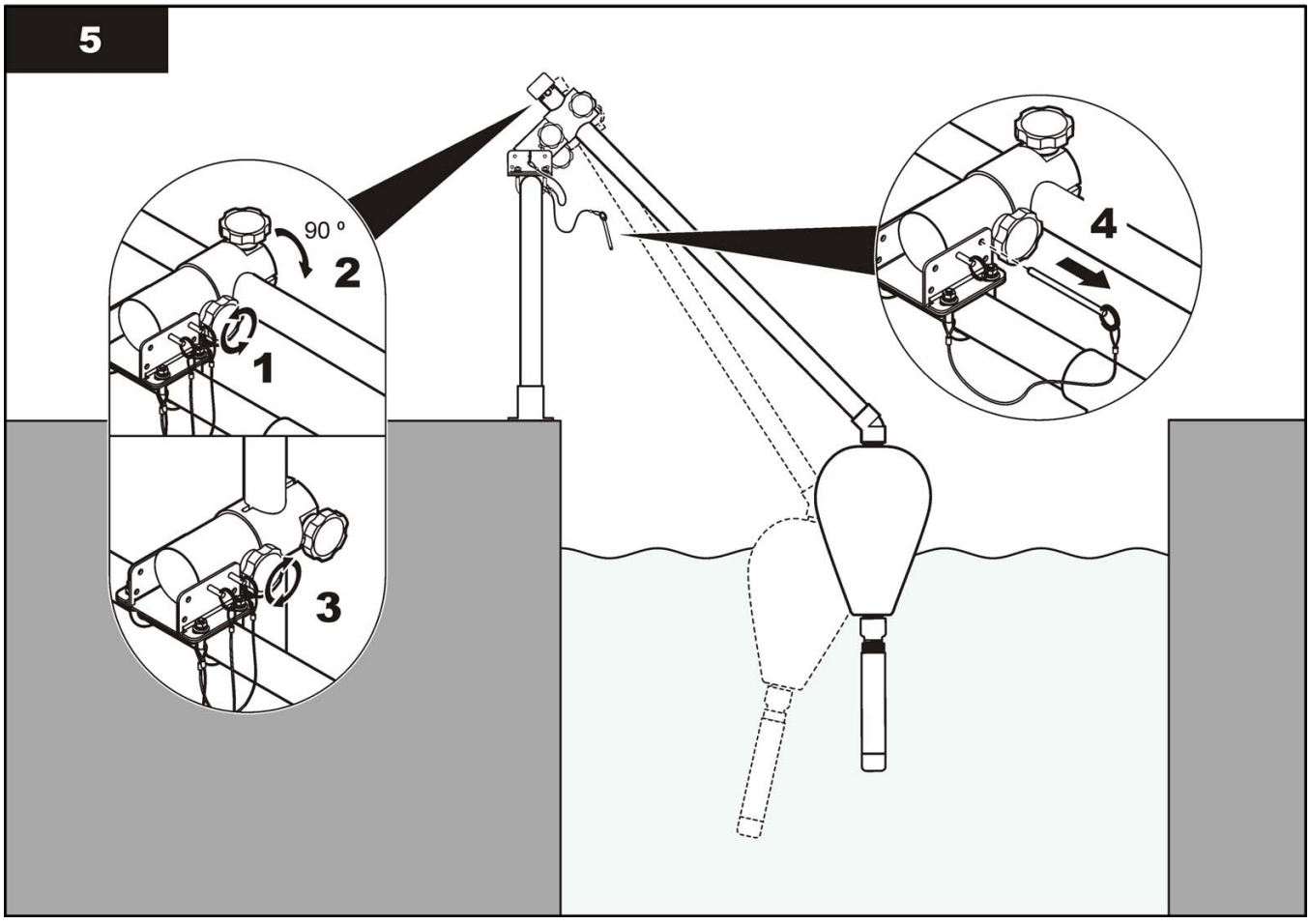
5
90 °
2
1
3
4

HACH COMPANY World Headquarters
P.O. Box 389, Loveland, CO 80539-0389 U.S.A.
Tel. (970) 669-3050
(800) 227-4224 (U.S.A. only)
Fax (970) 669-2932
orders@hach.com
www.hach.com

HACH LANGE GMBH
Willstätterstraße 11
D-40549 Düsseldorf, Germany
Tel. +49 (0) 2 11 52 88-320
Fax +49 (0) 2 11 52 88-210
info@hach-lange.de
www.hach-lange.de

HACH LANGE Sàrl
6, route de Compois
1222 Vésenaz
SWITZERLAND
Tel. +41 22 594 6400
Fax +41 22 594 6499



© Hach Company/Hach Lange GmbH, 2012. All rights reserved. Printed in U.S.A.
02/2012 Edition 1

Differential pH and ORP Sensors

TAG:
16-AE-402-1
16-AE-402-2
16-AE-402-3

Applications
- Drinking Water
- Wastewater
- Industrial
- Power Generation

The smart choice for accurate and reliable online process pH/ ORP measurement

Hach Digital pHD sc sensors are available in convertible (PEEK or PPS), insertion, and sanitary body styles. Three electrodes are used in these sensors to increase measurement accuracy and eliminate sensor ground loops.



Exceptional Process Sensor Performance with the Differential Electrode pHD Measurement Technique

This field-proven technique uses three electrodes instead of the two normally used in conventional pH/ORP sensors. Process and reference electrodes measure the pH/ORP differentially with respect to a third ground electrode. The end result is unsurpassed measurement accuracy, reduced reference junction potential, and elimination of sensor ground loops. These process pH/ORP sensors provide greater reliability, resulting in less downtime and maintenance.

Lower Maintenance Needs with the Double Junction Salt Bridge

The double junction salt bridge creates a barrier to contamination which minimizes the dilution of the internal standard cell solution. The result is lower maintenance needs and a longer time period between calibrations.

Extended Working Life with the Replaceable Salt Bridge/Protector

The unique, replaceable salt bridge holds an extraordinary volume of buffer to extend the working life of the sensor by protecting the reference electrode from harsh process conditions. The salt bridge simply threads onto the end of the sensor if replacement is needed.

Reliability with Built-in Encapsulated Preamp

Encapsulated construction protects the sensor's built-in preamp from moisture and humidity, ensuring reliable sensor operation. The preamp in the pHD analog sensor produces a strong signal, enabling the sensor to be located up to 1000 m (3280 ft.) from the analyzer.

Innovative Technology

The former GLI, now a Hach Company brand, invented the Differential Electrode Technique for pH measurement in 1970. The pHD sensor series takes this field-proven technology to a new level.

Versatile Mounting Styles

Sensors are available in four mounting styles - convertible, insertion, immersion, and sanitary

Differential Sensor Warranty

Hach Company offers the best sensor warranty in the industry on its Differential Sensors. We will replace any Differential Sensor that fails due to defects in materials or workmanship within one year from the date of shipment-and up to 30 months on a prorated basis for any failure.

Technical Data*

Compliance	For hazardous and maritime applications, CE	For non-hazardous and non-maritime applications only
Operating Temperature Range	-5 - 70 °C (23 - 158 °F) pHD and ORP 0 - 50 °C (32 - 122 °F) SS pHD Before initial pH calibration, calibrate the temperature measurement when the sensor is in water or buffer which is at approximately the same temperature as the pH buffers (matches current recommendation)	-5 - 70 °C (23 - 158 °F) pHD and ORP 0 - 50 °C (32 - 122 °F) SS pHD Before initial pH calibration, calibrate the temperature measurement when the sensor is in water or buffer which is at approximately the same temperature as the pH buffers (matches current recommendation) Please Note: When the sensor is placed into the application sample, if that sample is more than 10 °C (18 °F) different than the previous temperature/pH calibration, then it is recommended to recalibrate the temperature while the sensor is in the sample to maintain the ±0.5 °C (±0.9 °F) temperature accuracy specification.
Range	-2.0 to 14.0 pH -1500 to +1500 mV ORP	
Sensitivity	± 0.01 pH ± 0.5 mV	
Flow Rate	3 m (10 ft.) per second, maximum	
Pressure Range	Digital: 6.9 bar at 70 °C (100 psi at 158 °F)	
Temperature Sensor	NTC 300 Ω thermistor for automatic temperature compensation and analyzer temperature readout	
Transmission Distance	100 m (328 ft.), maximum	
	1000 m (3280 ft.), maximum when used with a termination box.	
Temperature Accuracy	± 0.5 °C (± 0.9 °F)	
Sensor Cable	4 conductor cable with one shield and polyurethane jacket; rated to 105 °C (221 °F); 10 m (33 ft.) standard length	
Wetted Materials	PEEK or PPS, salt bridge of matching material with PVDF junction, glass process electrode, titanium ground electrode, and FKM/FPM O-ring seals (pH sensor with optional HF-resistant glass process electrode has 316 stainless steel ground electrode, and perfluoroelastomer wetted O-rings; consult factory for other available wetted O-ring materials)	

**Subject to change without notice.*

Some industrial applications require accurate measurement and control below 2 or above 12 pH. In these special cases, please contact Hach Technical Support for further details.

For best ORP measuring results in solutions containing zinc, cyanide, cadmium or nickel, Hach recommends using the pHD sc ORP sensor equipped with an optional gold electrode.

Dimensions

Convertible style

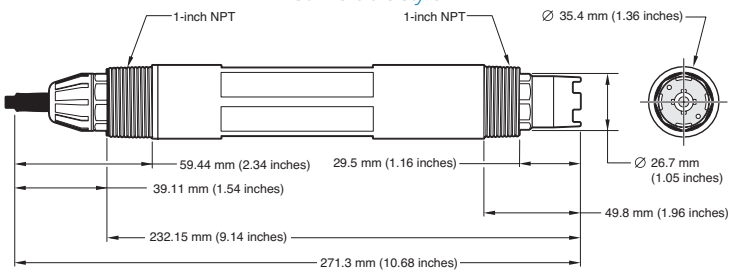

Insertion style

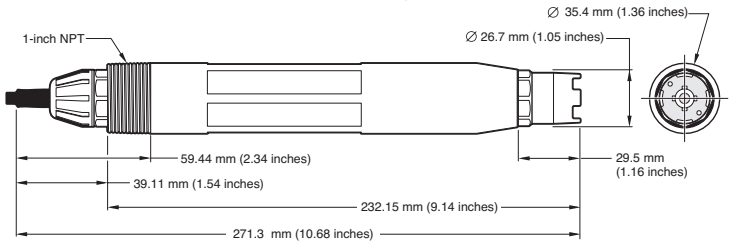

Sanitary style

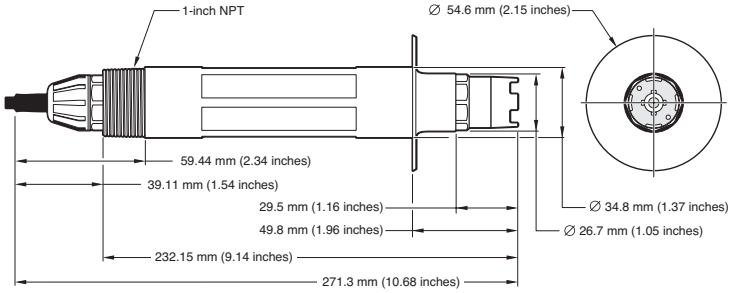

Immersion style

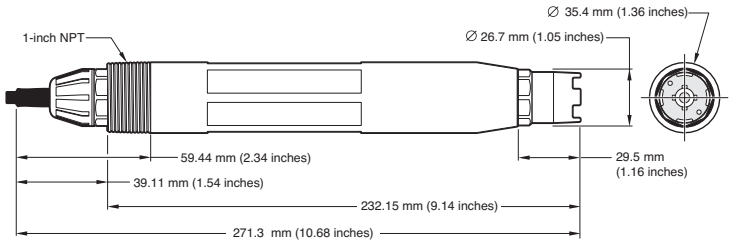

Order Information

pHD sc Digital Differential pH Sensors

DPD1P1	Digital pH Sensor, PEEK, Convertible, General Purpose
DPD1P1.1	Digital pH Sensor, PEEK, Convertible, General Purpose, Non-Hazardous Environment
DPD1P3	Digital pH Sensor, PEEK, Convertible, HF-resistant
DPD1P3.1	Digital pH Sensor, PEEK, Convertible, HF-resistant, Non-Hazardous Environment
DPD2P1	Digital pH Sensor, PEEK, Insertion, General Purpose
DPD2P1.1	Digital pH Sensor, PEEK, Insertion, General Purpose, Non-Hazardous Environment
DPD3P1	Digital pH Sensor, PPS, Convertible, HF-resistant
DPD1R1	Digital pH Sensor, PPS, Convertible, General Purpose
DPD1R1.1	Digital pH Sensor, PPS, Convertible, General Purpose, Non-Hazardous Environment
DPD1R3	Digital pH Sensor, PPS, Convertible, HF-resistant
DPD1R3.1	Digital pH Sensor, PPS, Convertible, HF-resistant, Non-Hazardous Environment
DPS1	Digital pH Sensor, Stainless Steel, Immersion, General Purpose
DPS1.1	Digital pH Sensor, Stainless Steel, Immersion, General Purpose, Non-Hazardous Environment

pHD sc Digital Differential ORP Sensors

DRD1P5	Digital ORP Sensor, PEEK, Convertible, Platinum
DRD1P5.1	Digital ORP Sensor, PEEK, Convertible, Platinum, Non-Hazardous Environment
DRD1P6	Digital ORP Sensor, PEEK, Convertible, Gold
DRD1R5	Digital ORP Sensor, PPS, Convertible, Platinum
DRD1R5.1	Digital ORP Sensor, PPS, Convertible, Platinum, Non-Hazardous Environment
DRD1R6	Digital ORP Sensor, PPS, Convertible, Gold
DRD1R6.1	Digital ORP Sensor, PPS, Convertible, Gold, Non-Hazardous Environment
DRD2P5	Digital ORP Sensor, PEEK, Insertion, Platinum
DRD2P5.1	Digital ORP Sensor, PEEK, Insertion, Platinum, Non-Hazardous Environment
DRS5	Digital ORP Sensor, Stainless Steel, Immersion, Platinum
DRS5.1	Digital ORP Sensor, Stainless Steel, Immersion, Platinum, Non-Hazardous Environment

All digital sensors include built-in digital electronics and integral 10 m (33 ft.) cable terminated with connector for the Hach SC Digital Controllers.

Digital Gateway

6120500	Use the Digital Gateway to connect pHD analog sensors to a Hach digital controller
6120500.1	Use the Digital Gateway to connect pHD analog sensors to a Hach digital controller

pHD Analog pH Sensors

PD1P1	Analog pH Sensor, PEEK, Convertible, General Purpose
PD1P3	Analog pH Sensor, PEEK, Convertible, HF-resistant
PD2P1	Analog pH Sensor, PEEK, Insertion, General Purpose
PD3P1	Analog pH Sensor, PEEK, Sanitary, General Purpose
PD1R1	Analog pH Sensor, PPS, Convertible, General Purpose
PD1R3	Analog pH Sensor, PPS, Convertible, HF-resistant

pHD Analog ORP Sensors

RD1P5	Analog ORP Sensor, PEEK, Convertible, Platinum
RD1P6	Analog ORP Sensor, PEEK, Convertible, Gold
RD2P5	Analog ORP Sensor, PEEK, Insertion, Platinum
RD1R5	Analog ORP Sensor, PPS, Convertible, Platinum
RD1R6	Analog ORP Sensor, PPS, Convertible, Gold

All analog sensors include built-in preamplifier and integral 4.5 m (15 ft.) cable terminated with stripped and tinned wires.

Cables

Extension cables are used only with digital sensors or digital gateways when connecting to an SC Digital Controller.

6122400	Digital Extension Cable, 1 m (3.3 ft.)
5796000	Digital Extension Cable, 7.7 m (25 ft.)
5796100	Digital Extension Cable, 15 m (50 ft.)
5796200	Digital Extension Cable, 30 m (100 ft.)

Interconnect cables are used only with analog sensors, junction box, and controller.

1W1100	Analog Interconnect Cable, order per foot

Digital Termination Box

Required when the cable between the sensor/gateway and SC Digital Controller is 100 m (328 ft.) to 1000 m (3280 ft.)

5867000	Digital Termination Box

Continued on next page.

Order Information *Continued.*

Analog Junction Box

Required when the cable between the analog sensor and controller is greater than standard sensor cable. Includes terminal strip and gasket.

60A2053	Junction Box, Surface-mount, aluminum (includes mounting hardware)
60A9944	Junction Box, Pipe-mount, PVC (for 1/2-inch diameter pipe, includes mounting hardware)
60G2052	Junction Box, Pipe-mount, PVC (for 1-inch diameter pipe, includes mounting hardware)
76A4010-001	Junction Box, NEMA 4X (no mounting hardware included)

Salt Bridges

The double junction salt bridge on the standard cell of all Hach pHD sensors is field-replaceable.

SB-P1SV	PEEK sensor and salt bridge body, PVDF outer junction
SB-P2SV	PEEK sensor and salt bridge body, ceramic outer junction
SB-P1SP	PEEK sensor and salt bridge body, PVDF outer junction
SB-R1SV	PPS sensor and salt bridge body, PVDF outer junction

pHD sensor reagents and standards

25M1A1025-115	Standard cell solution, concentrated pH 7.0 buffer (equi-transferrant), 500 mL
25M8A1002-101	Proprietary Gel Powder for pHD sc and pHD Sensors for high temperature applications

pH buffers

2283549	pH Buffer Solution, pH 7.00, 500 mL
2283549	pH Buffer Solution, pH 7.00, 500 mL
2283449	pH Buffer Solution, pH 4.01, 500 mL

ORP reference solutions (in resealable plastic bottles)

25M2A1001-115	200 mV reference sol. 500 mL (1 pt)
25M2A1002-115	600 mV reference sol. 500 mL (1 pt)

Sanitary mount

MH018S8SZ	316 SS

Includes 2 inch sanitary tee and heavy-duty clamp. cap and EPDM compound gasket supplied with sensor; can be ordered separately.

Union mount

6131300	CPVC
6131400	316 SS

Includes standard 1½ inch tee, union pipe with adapter, sealing hub, and lock ring and FKM/FPM O-ring.

Flow-through mount

MH334N4NZ	316 SS
MH314N4MZ	CPVC

Includes a standard 1 inch tee in respective material.

Insertion mount

Digital

5646300	CPVC
5646350	316 SS

Analog

5646400	CPVC
5646450	316 SS

Includes a 1½ inch ball valve, 1½ inch NPT close nipple, sensor adapter with two FKM/FPM O-rings and wiper, extension pipe, pipe adapter, back tube, and lock ring.

Immersion mount

Standard hardware

Digital

6136400	CPVC
6136500	316 SS

Analog

MH434A00B	CPVC
MH414A00B	316 SS

Includes 1 inch by 4 ft. pipe and 1 inch x 1 inch NPT coupling (pipe-mount junction box with terminal strip included in analog hardware).

Handrail hardware

MH236B00Z	Handrail Mounting Kit (for sensor to be used with either adapter above) includes 1.5-inch diameter by 7.5-ft long CPVC pipe and swivel/ pivot/ pipe clamp assembly

Includes 1½ inch by 7.5 ft., CPVC pipe, and swivel/pivot pipe clamp assembly.

Chain mount hardware

2881900	316 SS

Includes stainless steel bail, nuts, and washers. Does not include chain. To be used with stainless steel immersion sensor only.

Ball Float Hardware

6131000	CPVC

Includes 1½ inch by 7.5 ft. CPVC pipe, ball float assembly, and swivel/pivot pipe clamp assembly.

World Headquarters: Loveland, Colorado USA | hach.com

United States **800-227-4224** fax: 970-669-2932 email: orders@hach.com
Outside United States **970-669-3050** fax: 970-461-3939 email: int@hach.com

©Hach Company, 2022. All rights reserved.
In the interest of improving and updating its equipment, Hach Company reserves the right to alter specifications to equipment at any time.

DOC053.53.35337.Sep22

Digital Controller SC4500

Applications

- Wastewater
- Drinking Water
- Industrial Water
- Other



TAG:
16-AIT-405-1
16-AIT-405-2
16-AIT-405-3
16-AIT-403-1
16-AIT-403-2
16-AIT-403-3

Claros Enabled

Service Protected

Ready for Now. Ready for the Future.

Technologies are advancing rapidly, providing new levels of convenience, accuracy, and efficiency. Which is exactly why the SC4500 Controller from Hach® is designed to integrate easily into your current system while allowing you to upgrade as your capabilities advance, without having to replace inventory. With a wide range of analog and digital connectivity options and the availability of intelligent instrument and data management features, the SC4500 unlocks the future, today.

Easy Adoption

The familiar experience of a modern touchscreen, the ability to use your current Hach sensors, and the same footprint as the SC200, make installation and integration of the SC4500 Controller seamless.

No Time for Downtime

The SC4500's built-in predictive diagnostic software ensures measurement confidence and reduces the risk of unexpected equipment downtime by enabling proactive maintenance planning via MSM, including step-by-step instructions.

The Connectivity Options You Need

The Controller provides local communication to SCADA or a PLC, as well as remote access through a secure, cloud-based connectivity option to integrate with Claros™, the Water Intelligence System from Hach. From analog and advanced digital protocols to wi-fi, cellular or LAN, the SC4500 gives you the flexibility to adapt in a rapidly changing world.

HACH®
Be Right™

Technical Data*

Description	Microprocessor-controlled and menu-driven controller that operates the sensor
Dimensions	½ DIN - 144 x 144 x 192 mm (5.7 x 5.7 x 7.6 in.)
Weight	3.7 lb (controller only, w/o modules)
Display	3.5-inch TFT color display with capacitive touchpad
Enclosure Rating	UL50E type 4X, IEC/EN 60529–IP 66, NEMA 250 type 4X Metal enclosure with a corrosion-resistant finish
Operating Temperature Range	-20 to 60 °C (-4 to 140 °F) (8 W (AC)/9 W (DC) sensor load) -20 to 45 °C (-4 to 113 °F) (28 W (AC)/20 W (DC) sensor load) Linear derating between 45 and 60 °C (-1.33 W/°C)
Storage Conditions	-20 - 70 °C (-4 - 158 °F), 0 - 95% relative humidity, non-condensing
Altitude	2000 m (6562 ft) maximum
Installation Category	Category II
Pollution Degree	4
Protection Class	I, connected to protective earth
Power requirements	AC controller: 100-240 VAC ±10%, 50/60 Hz; 1 A (28 W sensor load) DC controller: 24 VDC +15% -20%; 2.5 A (20 W sensor load)
Measurements	Two device digital SC connectors
Relays	Two relays (SPDT); Wire gauge: 0.75 to 1.5 mm^2 (18 to 16 AWG) AC controller Maximum switching voltage: 100 - 240 VAC Maximum switching current: 5 A Resistive/1 A Pilot Duty Maximum switching power: 1200 VA Resistive/360 VA Pilot Duty DC controller Maximum switching voltage: 30 VAC or 42 VDC Maximum switching current: 4 A Resistive/1 A Pilot Duty Maximum switching power: 125 W Resistive/28 W Pilot Duty
Communication (optional)	Analog: Five 0-20 mA or 4-20 mA analog outputs on each analog output module Up to two analog Input modules (0-20 mA or 4-20 mA). Each input module replaces a digital sensor input. Digital: Profibus DPV1 module Modbus TCP Profinet IO module Ethernet IP module
Network Connectivity	LAN: Two Ethernet connectors (10/100 Mbps) Cellular: External 4G Wi-Fi
USB Port	Used for data download and software upload. The controller records approximately 20,000 data points for each connected sensor.
Compliance Certifications	CE. ETL certified to UL and CSA safety standards (with all sensor types), FCC, ISED, KC, RCM, EAC, UKCA, SABS, C (Morocco)
Warranty	12 months
Compatible Network Technologies	GSM 3G/4G (e.g. AT&T, T-Mobile, Rogers, Vodafone etc.) CDMA (e.g. Verizon)

**Subject to change without notice.*

Compatible Instruments / Software Version (Release Year)

Amtax sc / V2.30 (2018) or higher

A-ISE sc / V1.02 or higher

AN-ISE sc / V1.08 (2013) or higher

N-ISE sc / V1.02 or higher

Nitratax clear sc, Nitratax eco sc, Nitratax plus sc / V3.13 (2013) or higher

Phosphax sc / V2.30 (2018) or higher

Phosphax sc LR/MR/HR / V1.01 (2018) or higher

TSS sc / V41.73 (2013) or higher

Solitax sc / V2.20 (2013) or higher

TU5300sc, TU5400sc / V1.34 (2017) or higher

SS7 sc (in Bypass) / V1.06 (2006) or higher

Ultraturb sc / V3.06 (2017) or higher

1720E / V2.10 (2006) or higher

Sonatax sc / V1.15 (2016) or higher

CL17sc / V2.7 (2019) or higher

CL10sc / V1.14 (2013) or higher

9184sc, 9185sc, 9187sc* / V2.03 (2013) or higher

Uvas plus sc / V3.01 (2017) or higher

LDO 2 sc* / V1.22 (2013) or higher

3798sc* / V2.03 (2013) or higher

3700sc + Inductive Conductive Digital Gateway 6120800 / V3.00 (2017) or higher

3422sc, Analog 3400 + Contacting Cond. Digital Gateway 6120700 / V3.00 or higher

pHD sc*, pHD-S sc / V3.10 (2016) or higher

1200-S sc* / V2.04 (2013) or higher

pHD analog + Digital Gateway 6120500 / V3.00 (2017) or higher

RC and PC analog sensor + Digital Gateway for conventional analog pH and ORP sensors 6120600 / V3.00 (2017) or higher

8362sc* / V3.00 (2017) or higher

**Hardware Version1 of instrument is not supported*

Dimensions

Panel mounting dimensions

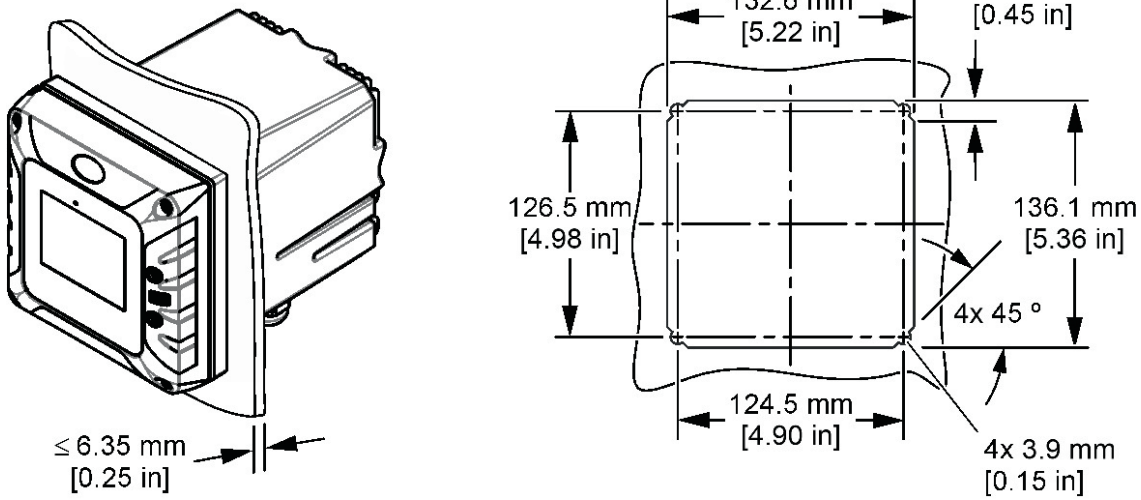

Top and bottom views

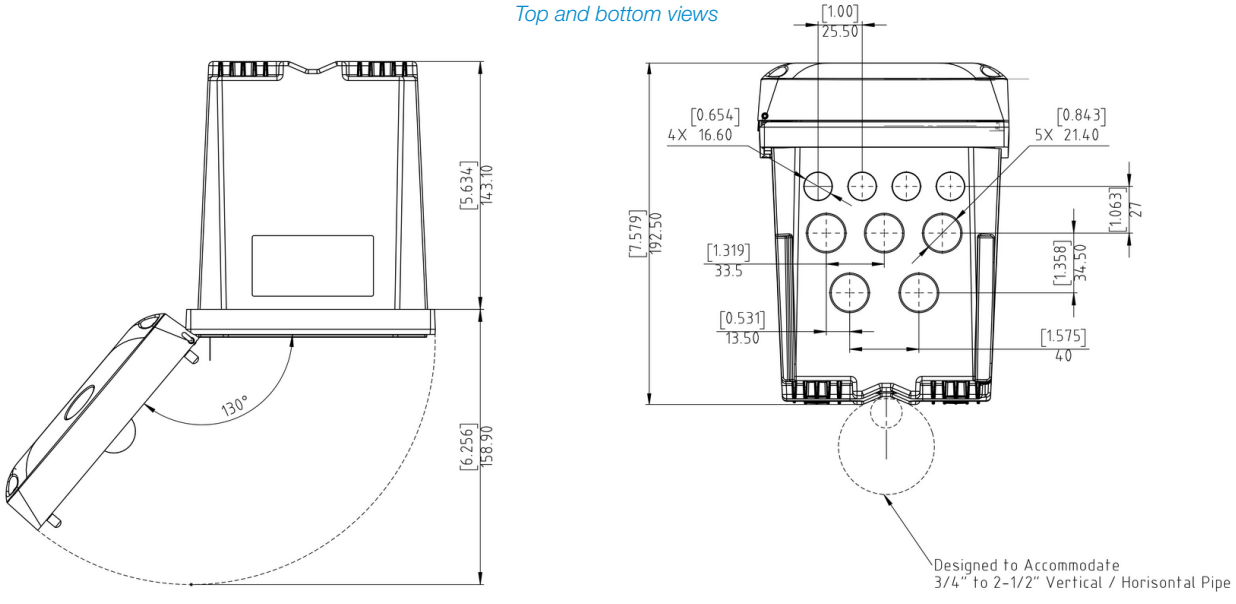

Door Opening Details

Order Information

Controller

LXV525.99A11551	SC4500 Controller, Prognosys, 5x mA Output, 2 digital Sensors, without plug
LXV525.99E11551	SC4500 Controller, Prognosys, 5x mA Output, 2 digital Sensors, US plug
LXV525.99A11541	SC4500 Controller, Prognosys, 5x mA Output, 1 digital Sensor, 1 mA Input, without plug
LXV525.99E11541	SC4500 Controller, Prognosys, 5x mA Output, 1 digital Sensor, 1 mA Input, US plug
LXV525.99AA1551	SC4500 Controller, Claros-enabled, 5x mA Output, 2 digital Sensors, without plug
LXV525.99EA1551	SC4500 Controller, Claros-enabled, 5x mA Output, 2 digital Sensors, US plug
LXV525.99AA1541	SC4500 Controller, Claros-enabled, 5x mA Output, 1 digital Sensor, 1 mA Input, without plug
LXV525.99EA1541	SC4500 Controller, Claros-enabled, 5x mA Output, 1 digital Sensor, 1 mA Input, US plug

Additional configurations are available. Please contact Hach Technical Support or your Hach representative.

Accessories

LXZ524.97.00042	SC4x00 Input Module
LXZ525.99.D0002	SC4x00 mA Output Module (5 Outputs)
LXZ525.99.C0002	SC4500 Ethernet IP Upgrade Kit
LXZ525.99.C0003	SC4500 Modbus TCP/IP Upgrade Kit
LXZ525.99.00026	SC4500 Ethernet Cable M12 to M12 / C1D2, 10 m
LXZ525.99.00017	SC4500 USB Stick
LXZ524.99.00004	SC4x00 UV Protection Screen
LXZ524.99.00005	SC4x00 UV Protection Screen with Sunroof
LXZ524.99.00033	SC4x00 Sunroof Visor
LXZ524.99.00036	SC4x00 Mounting Hardware Sunroof with Visor
LXZ524.99.00037	SC4x00 Sunroof with Visor

Claros Enabled

This instrument connects to Claros, Hach's innovative Water Intelligence System. Claros allows you to seamlessly connect and manage instruments, data, and process – anywhere, anytime. The result is greater confidence in your data and improved efficiencies in your operations. To unlock the full potential of Claros, insist on Claros Enabled instruments.

Service Protected

With Hach Service, you have a global partner who understands your needs and cares about delivering timely, high-quality service you can trust. Our Service Team brings unique expertise to help you maximize instrument uptime, ensure data integrity, maintain operational stability, and reduce compliance risk.

DOC053.53.35316.Nov21

Hach World Headquarters: Loveland, Colorado USA
United States: 800-227-4224 tel 970-669-2932 fax orders@hach.com
Outside United States: 970-669-3050 tel 970-461-3939 fax int@hach.com
hach.com

Printed in U.S.A.
©Hach Company, 2020. All rights reserved.
In the interest of improving and updating its equipment, Hach Company reserves the right to alter specifications to equipment at any time.

HACH® Be Right™

Engineering Sheet

E	*141105*	*UPDATED BRANDING*	*RJ*	*10-May-23*	*WM*	*10-May-22*
D	*139647*	*ADDED ADDITIONAL PSL*	*RJ*	*29-Jun-22*	*WM*	*29-Jun-22*
C	*133877*	*ADDED COVER SHEET*	*MR*	*25-Jun-20*	*WM*	*25-Jun-20*
B	*131798*	*REBRANDING*	*TG*	*14-Nov-18*	*MS*	*14-Nov-18*
A	*16481*	*INITIAL RELEASE*	*-*	*-*	*-*	*-*
REVISION	ECO	DESCRIPTION	PREP	DATE	APPD	DATE

PREPARED BY	*MR*	DATE	*25-Jun-20*	DOC NUMBER	*1314692*
CHECKED BY	*WM*	DATE	*25-Jun-20*	REVISION	*E*
APPROVER 1		DATE		PART NUMBER	*3148892*
APPROVER 2	*WM*	DATE	*25-Jun-20*	SHEET	*1 OF 2*
				PROJECT NUMBER	

PROPRIETARY AND CONFIDENTIAL:

THIS DRAWING AND ALL INFORMATION AND KNOWLEDGE CONTAINED OR REFERRED HEREIN ARE THE CONFIDENTIAL AND PROPRIETARY PROPERTY OF VEOLIA AND AS SUCH ARE INSTRUMENTS OF SERVICE FOR USE SOLELY WITH RESPECT TO THIS PROJECT. THESE INSTRUMENTS OF SERVICE SHALL NOT BE REPRODUCED, TRANSMITTED, DISCLOSED OR USED OTHERWISE, IN WHOLE OR IN PART, WITHOUT PRIOR WRITTEN AGREEMENT BY VEOLIA AND MUST BE IMMEDIATELY RETURNED OR DESTROYED UPON REQUEST.

DOC NUMBER: 1314692, REV. E

TITLE:

ASSY-INSTR,AIR,30CFM,NUM,W/ PNL

CLIENT:

LOCATION:

90-HV-005
90-HV-006
90-HV-004
90-F-002
90-PDI-001
90-PCV-001
90-PSLL-002
90-PSL-003

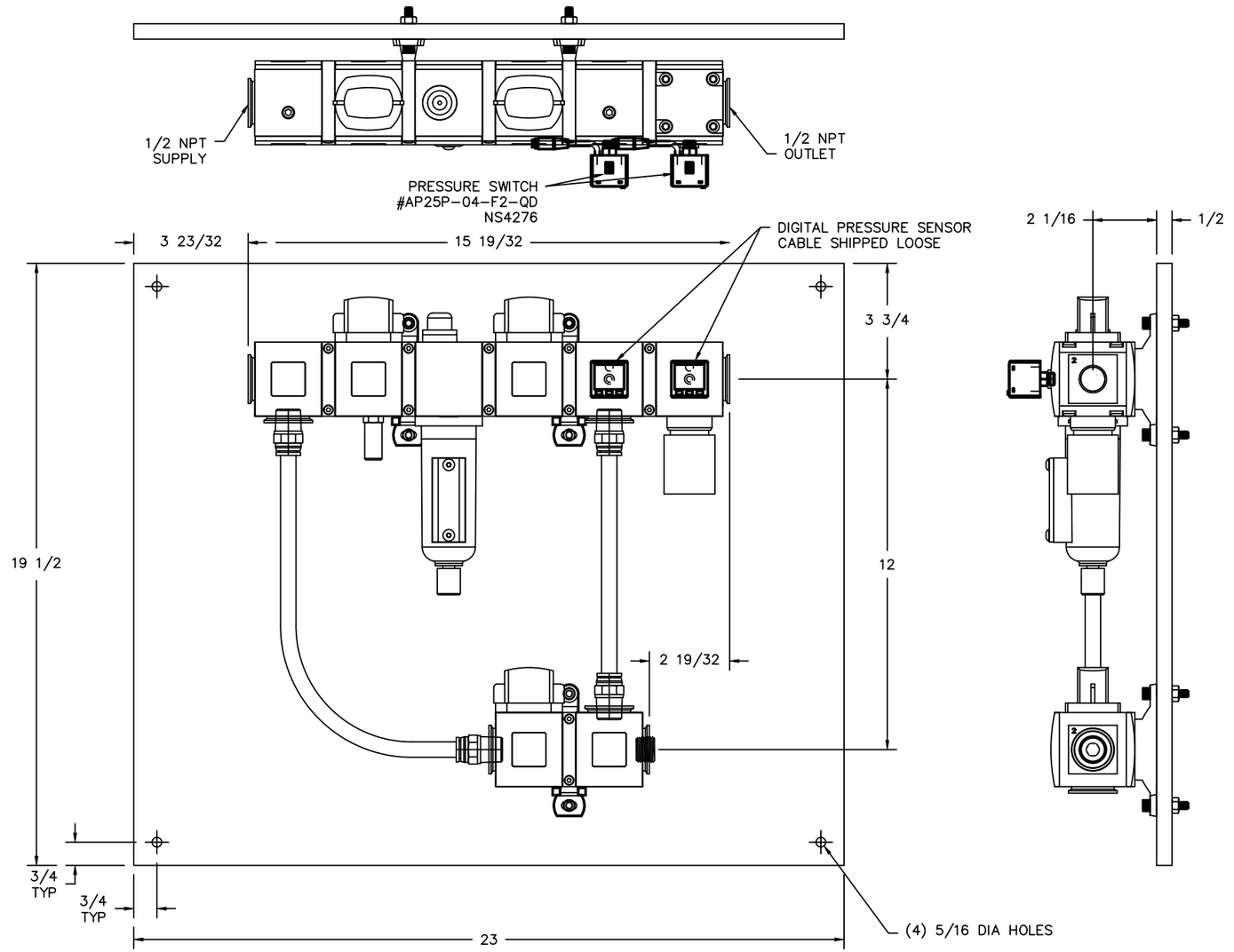

1NCS22-118012-2 CONSISTS OF			
PARTS LIST			
DET. NO.	NO. REQ'D	PART NAME	PART NO.
1	1	652 AIR PREP ASSEMBLY	A652A0000012901
1A	1	652 DIVERTER BLOCK	8652AD004TA0000
1B	1	652 SHUT-OFF	8652A3M04011100
1C	1	652 COAL FILTER	8652AFML4HA000N
1D	1	652 SHUT-OFF	8652A2M040A0000
1E	1	652 DIVERTER BLOCK	8652AD004TA0000
1F	1	652 REGULATOR	8652AK004N122G0
1G	2	SUPPORT BRACKET	P699AT502467001
2	1	652 AIR PREP ASSEMBLY	A652A0000012584
2A	1	652 SHUT-OFF	8652A2M040A0000
2B	1	652 DIVERTER BLOCK	8652AD004TA0000
2C	1	SUPPORT BRACKET	P699AT502467001
3	1	1/2 NPT S.S. PIPE PLUG	129-197
4	4	MALE CONNECTOR	INB103-102-023
5	1	MOUNTING PLATE	NS5752
6	6	1/4-20 X 1 1/4 SS SHCS	NS3878
7	6	1/4-20 SS HEX NUT	NS2621
8	2	PRESSURE SWITCH	NS4276
9	2	5M CABLE	NS5751
10	1	REDUCER BUSHING	NS3567
11	3	1/2 OD BLUE TUBING	QRTU50BL-1

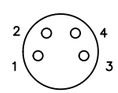

ELECTRICAL PINOUT
PIN #1 = BROWN (+)
PIN #2 = WHITE (OUT 2)
PIN #3 = BLUE (-)
PIN #4 = BLACK (OUT 1)

MAX FLOW: 30.5 SCFM (870 L/M)
@ 91 PSI WITH 5 PSI PRESSURE DROP

VSI #118012

LET	CHANGE	NO.	DATE	BY
AA	INITIAL RELEASE	-	6/17/22	JRR

REV: AA
CRITICAL TO FUNCTION
3RD ANGLE PROJECTION
SHEET 1 OF 1
CASTING NO.

SAP #3148892

BREAK ALL SHARP EDGES EXCEPT AS SHOWN
DECIMAL TOLERANCES
2 PLACE ± .010
3 PLACE ± .005
ANGLES ± 1/2°
ALL RIGHTS RESERVED

INITIAL—
DATE—

DRAWN: JRR 6/16/22
APPROVED: - -
SCALE: 1:2
NOVI, MICHIGAN USA
EMERSON
MATERIAL: -
PART NAME: VESSA WTS SERVICES 652 AIR PREP ASSEMBLY WITH HDPE MOUNTING PLATE
PART NO.: 1NCS22-118012-2