WHITE PLAINS CITY SCHOOL DISTRICT
ADDITION AT WHITE PLAINS HIGH SCHOOL

550 North Street, White Plains, NY 10605

66-22-00-01-0-016-030

CONTRACT C-CIVIL AND SITE WORK, CONTRACT G-GENERAL CONSTRUCTION WORK, CONTRACT P-PLUMBING WORK CONTRACT M-HEATING, VENTILATION, AND AIR CONDITIONING WORK & CONTRACT E-ELECTRICAL WORK

ABBREVIATIONS

AB	Anchor Bolt	F.C.	Fire Code
A/C	Air Conditioning	FD	Floor Drain
ACI	American Concrete Institute	FIN	Finish
ACST	Acoustic	FR	Fire Rated
ACP	Acoustical Ceiling Panels	FTG	Footing
ACU	Air Conditioning Unit	GA	Gauge
AD	Access Door	GWB	Gypsum Wall Board
ADJ	Adjustable	GYP	Gypsum
A/E	Architect/Engineer	GYP. BD.	Gypsum Board
AFF	Above Finish Floor	HC	Handicapped
ALUM	Aluminum	HM	Hollow Metal
ANCH	Anchor	HOR	Horizontal
ANSI	American National Standards Institute	HW	Hot Water
APA	Access Panel	INSUL	Insulation/Insulating
APPROX	Approximately	INT	Interior
ASPH	Asphalt	LAV	Lavatory
ASTM	American Society for Testing & Materials	LDR	Leader
		LT	Light
AWS	American welding Society	MAX	Maximum
B	Fire Blanket	MECH	Mechanical
BAL	Balance	MISC	Miscellaneous
BB	Bulletin Board	MO	Masonry Opening
BD	Board	MR	Moisture Resistant
BLDG	Building	NIX	Not in Contract
BLK	Block	NTS	Not to Scale
BLKG	Blocking	OC	On Center
BM	Beam	OD	Outside Diameter
B.O.	Bottom Of	PLYWD	Plywood
BOL	Bottom of Lintel	PSF	Pounds Per Square Foot
BOT	Bottom	PSI	Pounds Per Square Inch
CEIL	Ceiling	PTD	Painted
CEM	Cement	PVC	Polyvinyl Chloride
CER	Ceramic	R	Radius or Riser
CLO	Closet	RCP	Reflected Ceiling Plan
CMU	Concrete Masonry Unit	RD	Roof Drain
COL	Column	REINF	Reinforced
CONC	Concrete	RM	Room
CONST	Construction	RO	Rough Opening
CONT	Continuous	SIM	Similar
CORR	Corridor	SPEC	Specifications
CPT	Carpet	SQ	Square
DS	Down Spout	SS	Stainless Steel
DQ	Dishwasher	STL	Steel
DQG	Drawing	TEMP	Temperature
EA	Each	TER	Terrazzo
EL	Elevation	THK	Thick
ELEC	Electric/Electrical	TYP	Typical
ELEV	Elevator	UTIL	Utility
EP	Electrical Panel	VB	Vapor Barrier
EPY	Epoxy Coating	VCT	Vinyl Composition Tile
EQ	Equal	VTR	Vent Thru Roof
EQUIP	Equipment	WC	Water Closet
EXIST	Existing	WH	Water Heater
EXST	Exhaust	WWF	Welded Wire Fabric
FAI	Fresh Air Intake		

GENERAL NOTES

1. ALL WORK SHALL COMPLY WITH THE NEW YORK STATE FIRE PREVENTION AND BUILDING CODE AS WELL AS THE NEW YORK STATE EDUCATION DEPARTMENT MANUAL OF PLANNING STANDARDS.
2. ALL NOTES APPEARING HEREIN, WITH THOSE ON VARIOUS DRAWINGS SHALL APPLY TO ALL DRAWINGS AND FORM PART OF THE CONTRACT DOCUMENTS.
3. IT IS THE CONTRACTORS RESPONSIBILITY TO FIELD VERIFY ALL DIMENSIONS, SQUARE FOOTAGES, LOCATIONS AND QUANTITIES OF ALL ITEMS AND/OR SPACES WHETHER INDICATED IN THE DRAWINGS OR NOT.
4. DO NOT SCALE MEASURE ANY DRAWING. VERIFY THE FIGURES, DIMENSIONS AND DESIGN INTENTION SHOWN ON THE DRAWINGS BEFORE BEGINNING LAYOUT OF THE WORK AND REPORT ANY ERRORS, INACCURACIES, OR CONFLICTS TO THE ARCHITECT/ENGINEER IN WRITING BEFORE BEGINNING ANY WORK.
5. ALL WORK SHALL COMPLY WITH ALL APPLICABLE CODES, LAWS AND STATUTES AS REQUIRED. STRICTLY ADHERE TO MANUFACTURER'S PRINTED INSTRUCTIONS.
6. VERIFY EXACT LAYOUT COMPATIBILITY WITH ALL EXISTING CONDITIONS BEFORE BEGINNING WORK.
7. DISTURB ONLY THOSE AREAS OF THE SITE AFFECTED BY RENOVATION, UNLESS NOTED OTHERWISE. PROTECT ALL OTHER AREAS. CONTRACTORS SHALL BE RESPONSIBLE FOR ALL PATCH AND REPAIR OF EXISTING FINISHES WHICH ARE DAMAGED DURING CONSTRUCTION.
8. EACH CONTRACTOR SHALL COMPLY WITH THE REQUIREMENTS OF ANSI AND PROVIDE WHERE APPLICABLE ADA COMPLIANT BUILDING COMPONENTS.
9. THE OWNER RESUMES THE RIGHT AT ALL TIMES TO DELIVER, PLACE AND INSTALL EQUIPMENT AND FURNISHINGS AS THE WORK PROGRESSES SO LONG AS THERE IS NOT A CONFLICT WITH THE CONTRACTORS.
10. THE CONTRACTOR SHALL MAINTAIN AT THE SITE ONE RECORD COPY OF ALL DRAWINGS, SPECIFICATIONS AND APPROVED SHOP DRAWINGS AND APPROVED SAMPLES MARKED CURRENTLY TO RECORD ALL CHANGES DURING CONSTRUCTION.
11. ANY CHANGES TO THE SCOPE OF WORK OR IN THE CONSTRUCTION DETAILS, WHETHER DUE TO FIELD CONDITIONS OR OMISSION SHALL BE DOCUMENTED BY THE ARCHITECT PRIOR TO EXECUTION. ANY INCREASE OR DECREASE IN THE CONTRACT PRICE MUST BE APPROVED IN WRITING PRIOR TO EXECUTION.

DRAWING LIST

INFORMATIONAL DRAWING

G 000	GENERAL NOTES, ABBREVIATIONS, MAPS, DRAWINGS LIST, AND LEGENDS
G 001	STAGING PLAN, DETAILS, NOTES AND LEGEND
G 100a	BUILDING 'A' & BUILDING 'C' EXISTING GROUND FLOOR PLAN
G 100b	BUILDING 'A' & BUILDING 'C' EXISTING FIRST FLOOR PLAN
G 100c	BUILDING 'A' EXISTING SECOND FLOOR PLAN
G 101a	BUILDING 'B' EXISTING GROUND FLOR PLAN
G 101b	BUILDING 'B' EXISTING FIRST FLOOR PLAN
G 101c	BUILDING 'B' EXISTING SECOND FLOOR PLAN
G 102a	BUILDING 'C', BUILDING 'D', & BUILDING 'G' EXISTNG GROUND FLOOR PLAN
G 102b	BUILDING 'C' & BUILDING 'G' EXISTING FIRST FLOOR PLAN
G 102c	BUILDING 'D' EXISTING LOWER FLOOR PLAN
G 103a	BUILDING 'E' EXISTING GROUND FLOOR PLAN
G 103b	BUILDING 'E' & BUILDING 'F' EXISTING POOL FLOOR PLAN AND PARTIAL BASEMENT FLOOR PLAN
G 103c	BUILDING 'E' & BUILDING 'F' EXISTING GYM FLOOR PLAN
G 110	NEW YORK STATE CODE ANALYSIS - CODE SITE PLAN
G 111	NEW YORK STATE CODE ANALYSIS - GROUND FLOOR AND FIRST FLOOR EGRESS PLANS, ANALYSIS TABLES, AND NOTES
G 112	CODE ANALYSIS FIRE AREA BUILDING 'A', BUILDING 'I'
G 113	CODE ANALYSIS FIRE AREA BUILDING 'B'
G 114	CODE ANALYSIS FIRE AREA BUILDING 'C'
G 115	CODE ANALYSIS FIRE AREA BUILDING 'D', BUILDING 'G'
G 116	CODE ANALYSIS FIRE AREA BUILDING 'E', BUILDING 'F'
G 117	CODE ANALYSIS BEC COM-CHECK
G 120	GENERAL ACCESSIBILITY REQUIREMENTS
G 121	GENERAL ACCESSIBILITY REQUIREMENTS
G 122	GENERAL ACCESSIBILITY REQUIREMENTS
SB 100	SOIL BORING INFORMATION

CIVIL DRAWING

V 100	EXISTING CONDITIONS PLAN
CD 100	DEMOLITION SITE PLAN
CS 100	DIMENSIONAL SITE PLAN
C 100	GRADING, DRAINAGE, AND UTILITY PLAN
C 110	SOIL EROSION AND SEDIMENT CONTROL PLAN
CL 100	LANDSCAPE PLAN
C 500	SITE DETAILS
C 501	SITE DETAILS
C 502	SITE DETAILS
C 503	SITE DETAILS
C 504	SITE DETAILS

STRUCTURAL DRAWING

S 001	DESIGN CRITERIA AND GENERAL NOTES
S 100	FOUNDATION PLAN AND DESIGN LOADS
S 110	SLAB PLAN
S 120	FIRST FLOOR FRAMING PLAN
S 300	BUILDING BRACES
S 301	BUILDING BRACES
S 310	ROOF FRAMING PLAN

STRUCTURAL DRAWING

S 500	FOUNDATION DETAILS
S 501	FOUNDATION DETAILS
S 520	STRUCTURAL STEEL DETAILS
S 521	STRUCTURAL DETAILS
S 522	CFS FRAMING ISOMETRIC DETAILS
S 530	METAL DECK DETAILS
S 600	COLUMN SCHEDULE AND DETAILS

ARCHITECTURAL DRAWING

AD 100	DEMOLITION FIRST FLOOR CLASSROOM, NOTES, AND LEGENDS
A 000	PARTITION TYPES, DETAILS, NOTES, AND LEGEND
A 100	GROUND FLOOR PLAN, NOTES, AND LEGEND
A 101	FIRST FLOOR PLAN, NOTES, AND LEGEND
A 102	BASEMENT FLOOR PLAN, NOTES, AND LEGEND
A 120	GROUND FLOOR REFLECTED CEILING PLAN & NOTES
A 121	FIRST FLOOR REFLECTED CEILING PLAN & NOTES
A 130	ROOF PLAN
A 200	BUILDING ELEVATIONS
A 300	BUILDING SECTIONS
A 301	BUILDING SECTIONS
A 310	WALL SECTIONS
A 400	ENLARGED TYPICAL ART ROOM PLAN, ELEVATIONS, AND DETAILS
A 401	ENLARGED CULINARY ARTS PLAN, ELEVATIONS, DETAILS & SCHEDULES
A 402	ENLARGED PRESENTATION ROOM PLAN, ELEVATIONS, DETAILS & SCHEDULES
A 403	ENLARGED CERAMICS PLAN, ELEVATIONS, DETAILS & SCHEDULES
A 404	ENLARGED LOBBY & VESTIBULE, ELEVATIONS, DETAILS & SCHEDULES
A 405	ENLARGED PHOTOGRAPHY ROOM PLAN, ELEVATIONS, DETAILS & SCHEDULES
A 406	ENLARGED METAL / SCULPTURE PLAN, ELEVATIONS, DETAILS & SCHEDULES
A 407	ENLARGED LIFE SKILLS PLAN, ELEVATIONS, DETAILS & SCHEDULES
A 408	ENLARGED STEAM INNOVATION LAB PLAN, ELEVATIONS, DETAILS & SCHEDULES
A 409	ENLARGED BRIDGE PLAN, ELEVATION, DETAILS & SCHEDULES
A 410	ENLARGED TOILET ROOM PLANS, AND ELEVATIONS
A 411	TOILET ROOM DETAILS, SCHEDULES, AND NOTES
A 412	ENLARGED CANOPY PLANS, SECTION, ELEVATION, DETAILS, AND NOTES (ALTERNATE G-001)
A 430	STAIR 'A' PLANS, AND NOTES
A 431	STAIR 'A' SECTIONS, AND DETAILS
A 432	STAIR 'B' PLANS, AND SECTIONS

ARCHITECTURAL DRAWING

A 433	STAIR DETAILS
A 434	STAIR, AND RAMP DETAILS
A 440	ELEVATOR PLANS, SECTIONS, & DETAILS
A 441	ELEVATOR DETAILS
A 500	TYPICAL DETAILS
A 501	TYPICAL DETAILS
A 502	WALL DETAILS
A 503	WALL DETAILS
A 530	TYPICAL CEILING DETAILS
A 540	ROOF DETAILS
A 600	CASEWORK AND EQUIPMENT SCHEDULE
A 601	CASEWORK ELEVATIONS AND NOTES
A 602	CASEWORK DETAILS
A 603	CASEWORK DETAILS
A 610	WINDOW ELEVATIONS AND SCHEDULE
A 611	CURTAIN WALL ELEVATIONS
A 612	TYPICAL CURTAIN WALL DETAILS
A 613	TYPICAL CURTAIN WALL DETAILS
A 620	DOOR SCHEDULE
A 621	DOOR NOTES, AND DETAILS
A 622	DOOR NOTES, AND DETAILS
A 700	GROUND FLOOR FINISH PLAN, NOTES, AND LEGEND
A 701	FIRST FLOOR FINISH PLAN, NOTES, AND LEGEND
A 702	INTERIOR FINISH ELEVATIONS, NOTES, AND LEGEND
A 703	FINISH SCHEDULE AND DETAILS
A 704	GROUND FLOOR FURNITURE AND SIGNAGE PLAN
A 705	FIRST FLOOR FURNITURE PLAN AND SIGNAGE PLAN
A 706	FURNITURE SCHEDULE

PLUMBING DRAWING

P 001	GENERAL NOTES, LEGEND, ABBREVIATIONS
PS 100	SITE PLAN
P 120	DOMESTIC WATER AND GAS GROUND AND BASEMENT FLOOR PLAN
P 121	DOMESTIC WATER AND GAS FIRST FLOOR PLAN
P 130	SANITARY, VENT & STORM UNDERSLAB PLAN
P 131	SANITARY, VENT & STORM GROUND FLOOR PLAN
P 132	SANITARY, VENT & STORM FIRST FLOOR PLAN
P 140	ROOF PLAN
P 600	SCHEDULES AND SPECIFICATIONS
P 601	DETAILS
P 602	DOMESTIC RISER DIAGRAM
P 603	SANITARY, VENT AND KITCHEN WASTE RISER DIAGRAM (1 OF 2)
P 604	SANITARY, VENT AND KITCHEN WASTER RISER DIAGRAM (2 OF 2)
P 605	STORM RISER DIAGRAM
P 606	GAS RISER DIAGRAM

PLUMBING DRAWING

FP 001	GENERAL NOTES AND SCHEDULE
FP 100	GROUND FLOOR SPRINKLER PLAN
FP 101	FIRST FLOOR SPRINKLER PLAN
FP 500	SPRINKLER DETAILS

HVAC DRAWING

M 001	GENERAL HVAC NOTES, LEGENDS, AND ABBREVIATIONS
M 100	BASEMENT HVAC DUCTWORK PLAN
M 101	GROUND FLOOR HVAC DUCTWORK PLAN
M 102	FIRST FLOOR DUCTWORK PLAN
M 103	HVAC ROOF PLAN
M 201	GROUND FLOOR HVAC PIPING PLAN
M 202	FIRST FLOOR HVAC PIPING PLAN
M 203	ROOF HVAC PIPING PLAN
M 204	BUILDING A BOILER ROOM PLAN
M 300	SCHEDULES
M 301	SCHEDULES
M 302	SCHEDULES
M 400	DETAILS
M 401	DETAILS
M 500	KITCHEN DETAILS SHEET 1 OF 15
M 501	KITCHEN DETAILS SHEET 2 OF 15
M 502	KITCHEN DETAILS SHEET 3 OF 15
M 503	KITCHEN DETAILS SHEET 4 OF 15
M 504	KITCHEN DETAILS SHEET 5 OF 15
M 505	KITCHEN DETAILS SHEET 6 OF 15
M 506	KITCHEN DETAILS SHEET 7 0F 15
M 507	KITCHEN DETAILS SHEET 8 OF 15
M 508	KITCHEN DETAILS SHEET 9 OF 15
M 509	KITCHEN DETAILS SHEET 10 OF 15
M 510	KITCHEN DETAILS SHEET 11 OF 15
M 511	KITCHEN DETAILS SHEET 12 OF 15
M 512	KITCHEN DETAILS SHEET 13 OF 15
M 513	KITCHEN DETAILS SHEET 14 OF 15
M 514	KITCHEN DETAILS SHEET 15 OF 15

ELECTRICAL DRAWING

E 110	ELECTRICAL BASEMENT HVAC POWER PLAN
E 130	ELECTRICAL BASEMENT LOW VOLTAGE PLAN
E 001	GENERAL NOTES AND LEGENDS
EX 100	EXISTING ELECTRICAL PARTIAL GROUND FLOOR CONSTRUCTION PLAN
EX 101	EXISTING ELECTRICAL PARTIAL FIRST FLOOR PLANS
ES 100	ELECTRICAL SITE PLAN
ES 101	ELECTRICAL SITE LIGHTING PLAN
E 100	ELECTRICAL BASEMENT POWER PLAN
E 101	ELECTRICAL GROUND FLOOR POWER PLAN
E 102	ELECTRICAL FIRST FLOOR POWER PLAN
E 103	ELECTRICAL PARTIAL GROUND FLOOR POWER PLAN
E 104	ELECTRICAL GROUND FLOOR CONDUIT ROUTING PLAN

ELECTRICAL DRAWING

E 111	ELECTRICAL GROUND FLOOR HVAC POWER PLAN
E 112	ELECTRICAL FIRST FLOOR HVAC POWER PLAN
E 113	ELECTRICAL ROOF HVAC POWER PLAN
E 120	ELECTRICAL BASEMENT LIGHTING PLAN
E 121	ELECTRICAL GROUND FLOOR LIGHTING PLAN
E 122	ELECTRICAL FIRST FLOOR LIGHTING PLAN
E 131	ELECTRICAL GROUND FLOOR LOW VOLTAGE PLAN
E 132	ELECTRICAL FIRST FLOOR LOW VOLTAGE PLAN
E 200	ELECTRICAL SWITCHBOARD ELEVATIONS
E 500	ELECTRICAL DETAILS (SHEET 1 OF 2)
E 501	ELECTRICAL DETAILS (SHEET 2 OF 2)
E 600	ELECTRICAL LIGHTING SCHEDULES
E 601	ELECTRICAL SCHEDULES (SHEET 1 OF 2)
E 602	ELECTRICAL SCHEDULES (SHEET 2 OF 2)
E 610	ELECTRICAL PARTIAL SINGLE LINE DIAGRAM

LOCATION MAP

PROJECT LOCATION

SYMBOLS LEGEND

Symbol	Description	Material
OFFICE 10001A	ROOM DESIGNATION	GYPSUM
1 / A 101	SECTION MARK	CONCRETE
1 / FAD 100 Ref	DETAIL SYMBOL	AGGREGATE SUB-BASE
		EARTH
1 / A 101	ELEVATION KEY	BATT INSULATION
		PLYWOOD
A / A 101	INTERIOR ELEVATION REFERENCE	RIGID INSULATION
		STEEL
Name Elevation	ELEVATION LINE	WOOD
XX	REVISION TAG	WOOD BLOCKING
1i	PARTITION TYPE	
-	DOOR TAG	
-	WINDOW TAG	
-	KEY NOTE TAG	

UNIFORM SAFETY STANDARDS - FOR SCHOOL CONSTRUCTION AND MAINTENANCE PROJECTS - NYSED COMMISSIONER'S 155.5 REGULATIONS

1. "THE OCCUPIED PORTION OF ANY SCHOOL BUILDING SHALL ALWAYS COMPLY WITH THE MINIMUM REQUIREMENTS NECESSARY TO MAINTAIN A CERTIFICATE OF OCCUPANCY."

   THE OCCUPIED PORTION OF ANY SCHOOL BUILDING SHALL COMPLY WITH COMMISSIONER OF EDUCATION 155.5 UNIFORM SAFETY STANDARDS

2. NONE OF THE AREAS OF WORK TO BE DISTURBED DURING THIS PROJECT ARE KNOWN TO CONTAIN ASBESTOS AS EVIDENCED BY BULK OR DESTRUCT TESTING. A COPY OF THESE TEST RESULTS IS INCLUDED WITHIN THE ENVIRONMENTAL REPORT FOUND IN THE APPENDIX OF THE PROJECT MANUAL FOR THIS PROJECT.

3. "GENERAL SAFETY AND SECURITY STANDARDS FOR CONSTRUCTION PROJECTS:

   (1) ALL CONSTRUCTION MATERIALS SHALL BE STORED IN A SAFE AND SECURE MANNER.

   (2) FENCES AROUND CONSTRUCTION SUPPLIES OR DEBRIS SHALL BE MAINTAINED.

   (3) GATES SHALL ALWAYS BE LOCKED UNLESS A WORKER IS IN ATTENDANCE TO PREVENT UNAUTHORIZED ENTRY.

   (4) DURING EXTERIOR RENOVATION WORK, OVERHEAD PROTECTION SHALL BE PROVIDED FOR ANY SIDEWALKS OR AREAS IMMEDIATELY BENEATH THE WORK SITE OR SUCH AREAS SHALL BE FENCED OFF AND PROVIDED WITH WARNING SIGNS TO PREVENT ENTRY.

   (5) WORKERS SHALL BE REQUIRED TO WEAR PHOTO-IDENTIFICATION BADGES AT ALL TIMES FOR IDENTIFICATION AND SECURITY PURPOSES WHILE WORKING AT OCCUPIED SITES."

4. "SEPARATION OF CONSTRUCTION AREAS FROM OCCUPIED SPACES: CONSTRUCTION AREAS WHICH ARE UNDER THE CONTROL OF A CONTRACTOR AND THEREFORE NOT OCCUPIED BY DISTRICT STAFF OR STUDENTS SHALL BE SEPARATED FROM OCCUPIED AREAS. PROVISIONS SHALL BE MADE TO PREVENT THE PASSAGE OF DUST AND CONTAMINANTS INTO OCCUPIED PARTS OF THE BUILDING. PERIODIC INSPECTION AND REPAIRS OF THE CONTAINMENT BARRIERS MUST BE MADE TO PREVENT EXPOSURE TO DUST OR CONTAMINANTS. GYPSUM BOARD MUST BE USED IN EXIT WAYS OR OTHER AREAS THAT REQUIRE FIRE RATED SEPARATION. HEAVY DUTY PLASTIC SHEETING MAY BE USED ONLY FOR A VAPOR, FINE DUST OR AIR INFILTRATION BARRIER, AND SHALL NOT BE USED TO SEPARATE OCCUPIED SPACES FROM CONSTRUCTION AREAS.

   (1) A SPECIFIC STAIRWELL AND/OR ELEVATOR SHALL BE ASSIGNED OR CONSTRUCTION WORKER USE DURING WORK HOURS. IN GENERAL, WORKERS MAY NOT USE CORRIDORS, STAIRS OR ELEVATORS DESIGNATED FOR STUDENTS OR SCHOOL STAFF. WHERE NO STAIRWELL AND OR ELEVATOR IS ASSIGNED, WORKERS MUST ENTER THE CONSTRUCTION SPACES DIRECTLY FROM THE BUILDING EXTERIOR.

   (2) LARGE AMOUNTS OF DEBRIS MUST BE REMOVED BY USING ENCLOSED CHUTES OR A SIMILAR SEALED SYSTEM. THERE SHALL BE NO MOVEMENT OF DEBRIS THROUGH HALLS OF OCCUPIED SPACES OF THE BUILDING. NO MATERIAL SHALL BE DROPPED OR THROWN OUTSIDE THE WALLS OF THE BUILDING.

   (3) ALL OCCUPIED PARTS OF THE BUILDING AFFECTED BY RENOVATION ACTIVITY SHALL BE CLEANED AT THE CLOSE OF EACH WORKDAY. SCHOOL BUILDINGS OCCUPIED DURING A CONSTRUCTION PROJECT SHALL MAINTAIN REQUIRED HEALTH, SAFETY AND EDUCATIONAL CAPABILITIES AT ALL TIMES THAT CLASSES ARE IN SESSION."

5. A PLAN DETAILING HOW EXITING REQUIRED BY THE APPLICABLE BUILDING CODE WILL BE MAINTAINED.

6. WORK UNDER THIS CONTRACT WILL BE CONDUCTED DURING THE SUMMER RECESS WHEN THE BUILDING IS UNOCCUPIED. IF THE BUILDING BECOMES OCCUPIED THE CONTRACTOR SHALL BE RESPONSIBLE TO MAINTAIN ALL EXISTING MEANS OF EGRESS IN A CLEAR AND FREE MANNER, INCLUDING THE STORAGE OF MATERIALS AND STAGING OF EQUIPMENT ON THE SITE. IF ANY PORTION OF THE BUILDING DOES BECOME OCCUPIED THE ARCHITECT WILL PROVIDE A DETAILED PLAN FOR EXITING, OVERHEAD PROTECTION AND EGRESS IN ACCORDANCE WITH APPLICABLE BUILDING CODES.

7. A PLAN DETAILING HOW ADEQUATE VENTILATION WILL BE MAINTAINED DURING CONSTRUCTION.

8. WORK UNDER THIS PROJECT WILL BE COMPLETED DURING THE SUMMER RECESS WHEN THE BUILDING WILL NOT BE OCCUPIED BY FACULTY, STAFF OR STUDENTS. IF A PORTION OF THE BUILDING IS TO BECOME OCCUPIED DURING THE CONSTRUCTION PROCESS THE CONTRACTOR SHALL CLOSE OFF ALL INTAKES, OPENINGS, AND MECHANICAL VENTILATION SYSTEMS ADJACENT TO THE WORK AREA. THE ARCHITECT SHALL ASSIST THE CONTRACTOR IN DEVELOPING A PLAN TO PROVIDE ALTERNATE MEANS OF FRESH AIR TO ALL OCCUPIED SPACES.

9. "CONSTRUCTION AND MAINTENANCE OPERATIONS SHALL NOT PRODUCE NOISE IN EXCESS OF 60 DBA IN OCCUPIED SPACES OR SHALL BE SCHEDULED FOR TIMES WHEN THE BUILDING OR AFFECTED BUILDING SPACES ARE NOT OCCUPIED OR ACOUSTICAL ABATEMENT MEASURES SHALL BE TAKEN."

10. "THE CONTRACTOR SHALL BE RESPONSIBLE FOR THE CONTROL OF CHEMICAL FUMES, GASES, AND OTHER CONTAMINATES PRODUCED BY WELDING, GASOLINE OR DIESEL ENGINES, ROOFING, PAVING, PAINTING, ETC. TO ENSURE THEY DO NOT ENTER OCCUPIED PORTIONS OF THE BUILDING OR AIR INTAKES." ALL VENTS SHALL BE SEALED TO PREVENT CONTAMINANTS FROM THE CONSTRUCTION AREA FROM ENTERING THE OCCUPIED AREAS OF THE BUILDING.

11. "THE CONTRACTOR SHALL BE RESPONSIBLE TO ENSURE THAT ACTIVITIES AND MATERIALS WHICH RESULT IN "OFF-GASSING" OF VOLATILE ORGANIC COMPOUNDS SUCH AS GLUES, PAINTS, FURNITURE, CARPETING, WALL COVERING, DRAPERY, ETC. ARE SCHEDULED, CURED OR VENTILATED IN ACCORDANCE WITH MANUFACTURERS RECOMMENDATIONS BEFORE A SPACE CAN BE OCCUPIED."

12. "LARGE AND SMALL ASBESTOS ABATEMENT PROJECTS AS DEFINED BY 12NYCRR56 SHALL NOT BE PERFORMED WHILE THE BUILDING IS OCCUPIED." IT IS OUR INTERPRETATION THAT THE TERM "BUILDING", AS REFERENCED IN THIS SECTION, MEANS A WING OR MAJOR SECTION OF A BUILDING THAT CAN BE COMPLETELY ISOLATED FROM THE REST OF THE BUILDING WITH SEALED NON COMBUSTIBLE CONSTRUCTION. THE ISOLATED PORTION OF THE BUILDING MUST CONTAIN EXITS THAT DO NOT PASS THROUGH THE OCCUPIED PORTION AND VENTILATION SYSTEMS MUST BE PHYSICALLY SEPARATED AND SEALED AT THE ISOLATION BARRIER.

13. EXTERIOR WORK SUCH AS ROOFING, FLASHING, SIDING, OR SOFFIT WORK MAY BE PERFORMED ON OCCUPIED BUILDINGS PROVIDED PROPER VARIANCES ARE IN PLACE AS REQUIRED, AND COMPLETE ISOLATION OF VENTILATION SYSTEMS AND AT WINDOWS IS PROVIDED. CARE MUST BE TAKEN TO SCHEDULE WORK SO THAT CLASSES ARE NOT DISRUPTED BY NOISE OR VISUAL DISTRACTION.

14. MINOR ASBESTOS PROJECTS DEFINED BY 12NYCRR56 AS AN ASBESTOS PROJECT INVOLVING THE REMOVAL, DISTURBANCE, REPAIR, ENCAPSULATION, ENCLOSURE OR HANDLING OF 10 SQUARE FEET OF ASBESTOS OR ASBESTOS MATERIAL MAY BE PERFORMED IN UNOCCUPIED AREAS OF AN OCCUPIED BUILDING IN ACCORDANCE WITH 12NYCRR56.

15. NONE OF THE SURFACES AND/OR MATERIALS TO BE REMOVED OR DISTURBED BY THIS RENOVATION ARE SUSPECT OF CONTAINING LEAD.

16. UNDER NEW YORK STATE LAW SMOKING IS PROHIBITED ON SCHOOL GROUNDS. EMPLOYEES FOUND TO BE SMOKING ON SCHOOL GROUNDS SHALL BE ORDERED OFF SITE AND A SECOND OFFENSE WILL BE GROUNDS FOR PERMANENT REMOVAL FROM PROJECT. LEGAL PENALTIES MAY ALSO BE APPLIED.

17. ALL CONTRACTORS SHALL TAKE EVERY PRECAUTION AND SHALL PROVIDE SUCH EQUIPMENT AND FACILITIES AS ARE NECESSARY OR REQUIRED FOR THE SAFETY OF ITS EMPLOYEES. IN CASE OF AN ACCIDENT, FIRST AID SHALL BE ADMINISTERED TO ANY WHO MAY BE INJURED IN THE PROGRESS OF THE WORK. IN ADDITION, THE CONTRACTOR SHALL BE PREPARED FOR THE REMOVAL TO THE HOSPITAL FOR TREATMENT OF ANY EMPLOYEE EITHER SERIOUSLY INJURED OR ILL.

18. THE CONTRACTOR FOR GENERAL CONSTRUCTION SHALL PROVIDE TEMPORARY WEATHER-TIGHT AND INSULATED ENCLOSURES AS MAY BE REQUIRED BY THE SCOPE OF WORK FOR ALL EXTERIOR OPENINGS SO AS TO PROTECT ALL WORK FROM THE WEATHER, AND TO PROVIDE SECURITY AGAINST UNAUTHORIZED ENTRY. ENCLOSURES SHALL NOT CREATE DEAD END CONDITIONS, REQUIRED EXITS SHALL BE MAINTAINED FREE AND CLEAR.

H2M architects + engineers

538 Broad Hollow Road, 4th Floor East
Melville, NY 11747
631.756.8000 • www.h2m.com
Architecture & Landscape Architecture: No Certificate Required
Engineering Certificate of Authorization No.: 0018178

CONSULTANTS:

MARK	DATE	DESCRIPTION
2	01-10-2025	SED ADDENDUM 2

REGISTERED ARCHITECT KEVIN MICHAEL MEDLER 038379 STATE OF NEW YORK

KEVIN M. MEDLER, R.A.
NY PROFESSIONAL ARCHITECT Lic. No. 038379
07/31/2024 Exp. Date

"ALTERATION OF THIS DOCUMENT EXCEPT BY A LICENSED PROFESSIONAL IS ILLEGAL"

DESIGNED BY:	DRAWN BY:	CHECKED BY:	REVIEWED BY:
CWP	DOD/NPO	CWP/KMM	

PROJECT No:	DATE:	SCALE:
WPSD 2203	MARCH 2025	AS SHOWN

CLIENT

WHITE PLAINS CITY SCHOOL DISTRICT

ADDITION AT WHITE PLAINS HIGH SCHOOL

550 NORTH STREET, WHITE PLAINS, NY 10605

66-22-00-01-0-016-030

CONTRACT: ALL CONTRACTS

STATUS: FINAL BID SET

SHEET TITLE: GENERAL NOTES, ABBREVIATIONS, MAPS, DRAWINGS LIST, AND LEGENDS

DRAWING No.: **G 000.00**

C:\Users\ddesouza\Documents\WPSD2203_Central21_A_DDeSouzaD8TU8.rvt
3/6/2025 2:52:43 PM

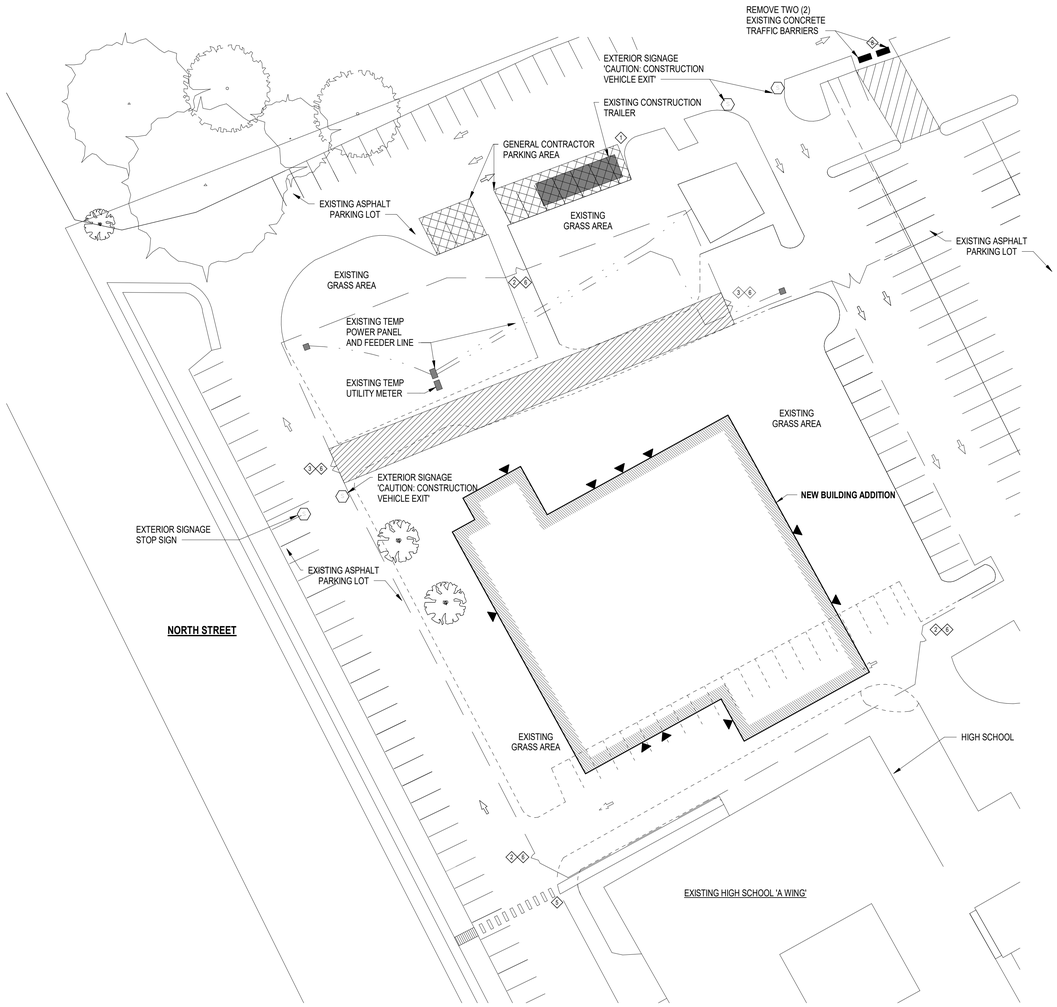

1 **Dammann House Staging Plan**
SCALE: 1/32" = 1'-0"

STAGING PLAN NOTES

1. POST SIGNS INDICATING CONSTRUCTION AREA AND CONSTRUCTION EMPLOYEE ENTRANCE. SEE SIGN SCHEDULE BELOW.
2. EXISTING CONSTRUCTION FENCE TO BE 8'-0" HIGH CHAIN LINK FENCE LOCATED A MINIMUM OF 15'-0" FROM ALL WINDOW OPENINGS. ALL GATES ARE TO BE LOCKED AT ALL TIMES, EXCEPT FOR WHEN A WORKER IS IN ATTENDANCE TO PREVENT UNAUTHORIZED ENTRY. SEE LEGEND BELOW.
3. CONTRACTOR IS TO STAGE ON THE SITE IN SUCH A MANNER AS TO NOT BLOCK OR ENCROACH UPON EXISTING EXITS/ENTRANCES TO BUILDING AND VEHICLE ACCESS.
4. CONTRACTOR SHALL RESTORE ALL STAGING AREAS TO PRE-CONSTRUCTION CONDITION, UPON COMPLETION OF WORK IN THAT AREA.

LEGEND

- EXISTING 8'-0" HIGH TEMPORARY CHAIN LINK FENCING AND GATE AS SHOWN ON THE DRAWINGS TO REMAIN (EXACT LOCATION OF FENCING TO BE VERIFIED WITH OWNER AND CONSTRUCTION MANAGER). THIS FENCING SHALL BE CONSTRUCTED OF NINE GAUGE GALV. STEEL WIRE W/ 2 $\frac{1}{2}$" GALV. LIRE POST & END/CORNER POST, WITH TOP RAIL & BOTTOM WIRE. PROVIDE TRAFFIC & PEDESTRIAN GATES WITH HARDWARE & LOCKS. ALL FENCING SHALL HAVE A CLOTH WOVEN, BLIND SCREEN MESH INSTALLED ON THE "PUBLIC" SIDE OF THE FENCE. MESH TO BE DARK GREEN OR BLACK. WHEN DIRECTED BY THE CONSTRUCTION MANAGER, THE SAME CONTRACTOR SHALL REMOVE & DISPOSE OF THIS FENCING AND ALL RELATED MATERIALS.
- EXISTING 20'-0" WIDE TRAFFIC GATE TO REMAIN.
- EXISTING 3'-0" WIDE PEDESTRIAN GATE TO REMAIN.
- BUILDING ENTRY
- TEMPORARY CONSTRUCTION ROAD/LAYDOWN AREAS. G.C. TO SCRAPE AND STOCKPILE TOPSOIL PRIOR TO INSTALLATION. ALL AREAS TO BE RESTORED AFTER PROJECT COMPLETION.
- DESIGNATED G.C. PARKING AREA
- EXISTING 4'-0" HIGH ORANGE NET FENCING W/ POSTS EVERY 8'-0"

TEMPORARY SIGN SCHEDULE

(24" x 24", 16 GA.STEEL)

1. CONSTRUCTION PARKING ENTRANCE (EXISTING)
2. NO ADMITTANCE WITHOUT SIGNING IN AT C.M. OFFICE
3. CONSTRUCTION DELIVERIES
4. SLOW CHILDREN AT PLAY (EXISTING)
5. EXISTING STUDENT WALK (CONCRETE SIDE WALK WITH CURB CUT)
6. EXISTING SIGNS AT EACH CONSTRUCTION GATE ENTRANCE LOCATIONS,
   - DANGER - DO NOT ENTER
   - AUTHORIZED PERSONNEL ONLY
   - JOB SITE RULES (2'x3')
7. EXISTING SIGNS AT EACH ENTRANCE TO SCHOOL CAMPUS,
   - ENTERING WORK ZONE
   - TRUCK ACTIVITIES
8. DISTRICT DELIVERIES

TYPICAL SIGN SCHEDULE

(24" x 24", 16 GA.STEEL)

- A "HARD HAT" AREA EVERY 50'-0" ON FENCING THROUGHOUT LENGTH OF FENCE
- B "DANGER" EVERY 30'-0" ON FENCING THROUGHOUT LENGTH OF FENCE
- C "NO TRESPASSING" EVERY 90'-0" ON FENCING THROUGHOUT LENGTH OF FENCE.

NOTES

1. AT JOB COMPLETION THE G.C. IS TO REMOVE ALL TEMPORARY WALLS, WALKS, ETC. AND RESTORE SITE TO ORIGINAL CONDITION.

H2M architects + engineers
538 Broad Hollow Road, 4th Floor East
Melville, NY 11747
631.756.8000 • www.h2m.com
Architecture & Landscape Architecture: No Certificate Required
Engineering Certificate of Authorization No.: 0018178

CONSULTANTS:

MARK	DATE	DESCRIPTION

REGISTERED ARCHITECT KEVIN MICHAEL MEDLER 038379 STATE OF NEW YORK

KEVIN M. MEDLER, R.A.
NY PROFESSIONAL ARCHITECT Lic. No. 038379

07/31/2024 Exp. Date

THE TRANSFERABILITY AND ACCURACY OF THIS DOCUMENT IS NOT GUARANTEED AFTER 30 CALENDAR DAYS FROM ORIGINAL IN ELECTRONIC FORMAT.

DESIGNED BY:	DRAWN BY:	CHECKED BY:	REVIEWED BY:
CWP	DOD/NPO	CWP/KMM	

PROJECT No:	DATE:	SCALE:
WPSD 2203	MARCH 2025	AS SHOWN

CLIENT

WHITE PLAINS CITY SCHOOL DISTRICT

ADDITION AT WHITE PLAINS HIGH SCHOOL

550 NORTH STREET, WHITE PLAINS, NY 10605

66-22-00-01-0-016-030

CONTRACT

ALL CONTRACTS

STATUS

FINAL BID SET

SHEET TITLE

STAGING PLAN, DETAILS, NOTES AND LEGEND

DRAWING No.

G 001.00

C:\Users\ddesouza\Documents\WPSD2203_Central\21_A_DDeSouza3ST1B.rvt
3/6/2025 2:52:44 PM

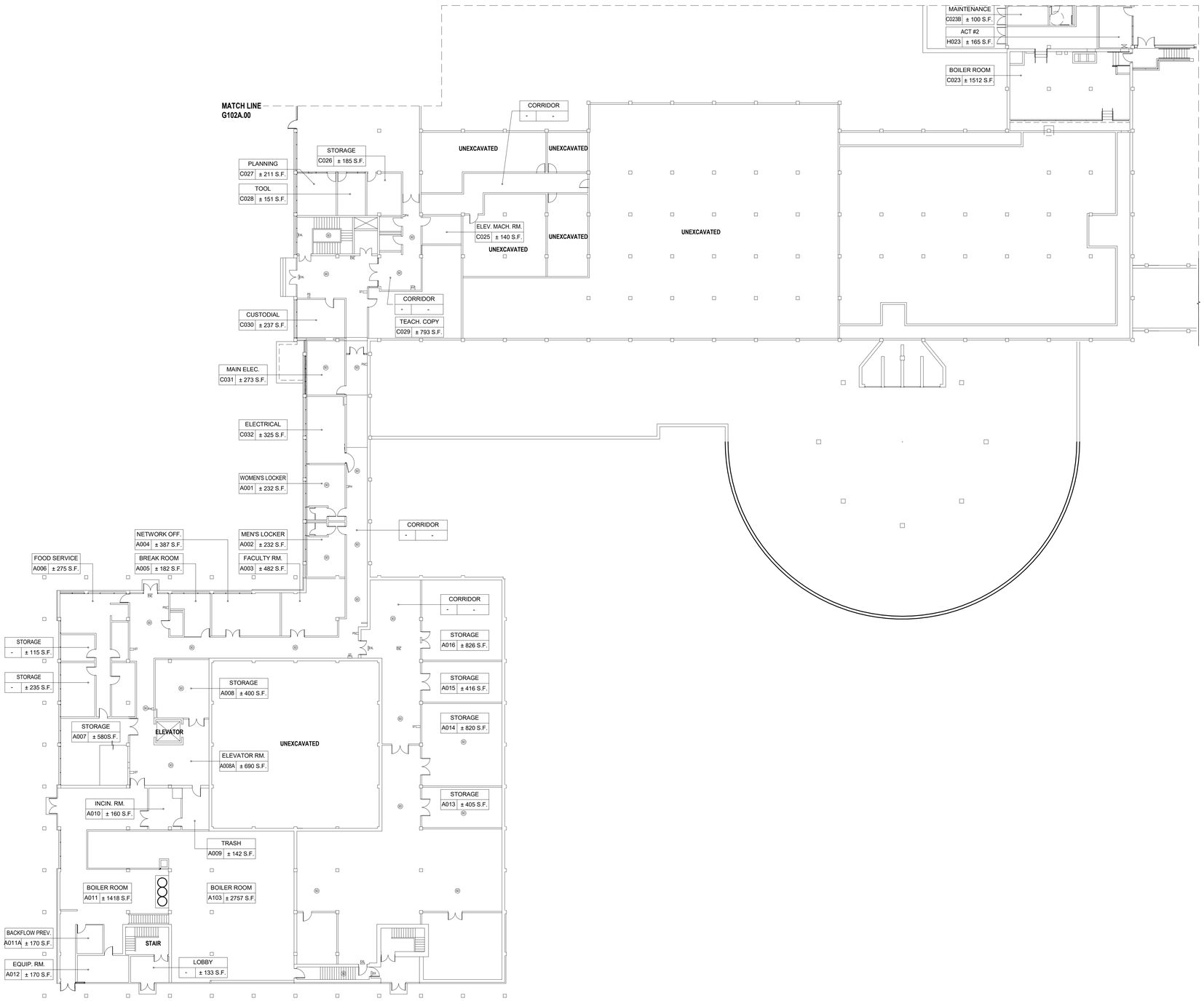

1 **Building 'A' & 'C' Proposed Ground Floor Plan**
SCALE: 1/16" = 1'-0"

LEGEND

ROOM 000 ± S.F.	ROOM NUMBER DESIGNATION TAG
F	EXISTING FIRE EXTINGUISHER
E	EXISTING EXIT SIGN
PS	EXISTING PULL STATION
ST	EXISTING FIRE ALARM STROBE
SD	EXISTING SMOKE DETECTOR
EW	EYE WASH STATION
	EMERGENCY LIGHTING

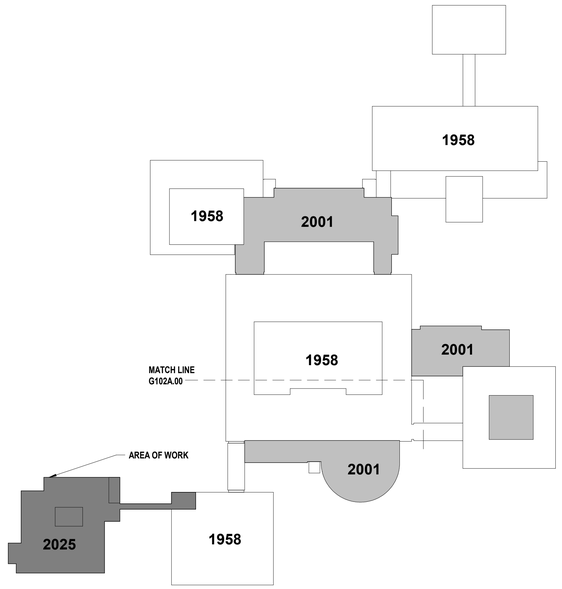

Key Plan
SCALE: 1" = 100'-0"

H2M architects + engineers
538 Broad Hollow Road, 4th Floor East
Melville, NY 11747
631.756.8000 • www.h2m.com
Architecture & Landscape Architecture: No Certificate Required
Engineering Certificate of Authorization No.: 0018178

CONSULTANTS:

MARK	DATE	DESCRIPTION

REGISTERED ARCHITECT KEVIN MICHAEL MEDLER STATE OF NEW YORK 038379

KEVIN M. MEDLER, R.A.
NY PROFESSIONAL ARCHITECT Lic. No. 038379

DESIGNED BY:	DRAWN BY:	CHECKED BY:	REVIEWED BY:
CWP	DOD/NPO	CWP/KMM	
PROJECT No: WPSD 2203	DATE: MARCH 2025	SCALE: AS SHOWN	

CLIENT

WHITE PLAINS CITY SCHOOL DISTRICT

ADDITION AT WHITE PLAINS HIGH SCHOOL

550 NORTH STREET, WHITE PLAINS, NY 10605

66-22-00-01-0-016-030

CONTRACT

ALL CONTRACTS

STATUS

FINAL BID SET

SHEET TITLE

BUILDING 'A' & BUILDING 'C' EXISTING GROUND FLOOR PLAN

DRAWING No.

G 100a.00

C:\Users\kbeasucci\Documents\WPSD2203_Cwha\21_A_DDsSuccDR18.rvt

3/6/2025 2:52:46 PM

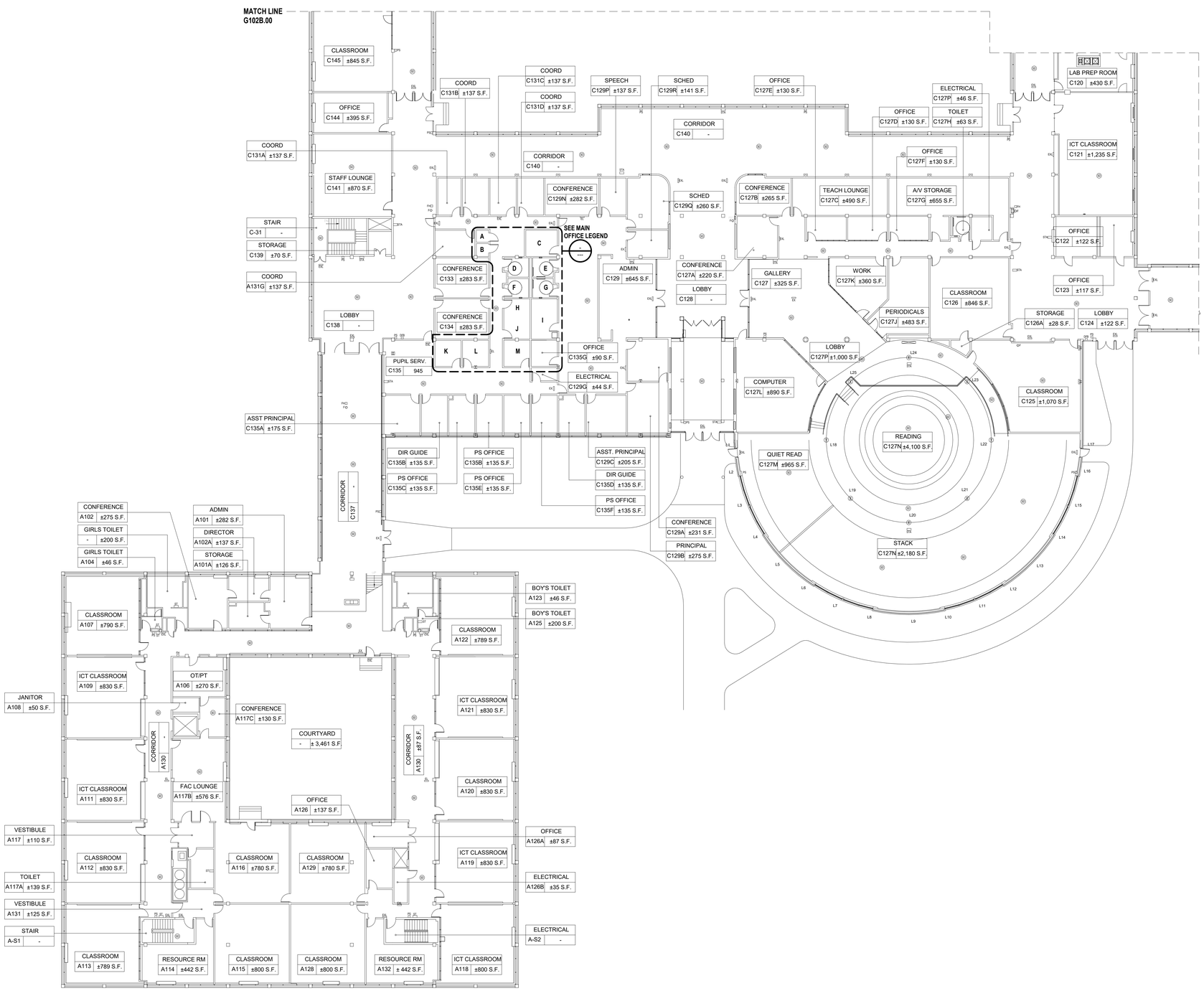

1 **Building 'A' & 'C' Proposed First Floor Plan**
SCALE: 1/16" = 1'-0"

LEGEND

ROOM	ROOM NUMBER DESIGNATION TAG
000 ± S.F.	

- EXISTING FIRE EXTINGUISHER
- EXISTING EXIT SIGN
- EXISTING PULL STATION
- EXISTING FIRE ALARM STROBE
- EXISTING SMOKE DETECTOR
- EYE WASH STATION
- EMERGENCY LIGHTING

MAIN OFFICE LEGEND

A	STORAGE	C131E ±19 S.F.
B	STORAGE	C131F ±19 S.F.
C	SAFE	C129M ±110 S.F.
D	MEN'S TOILET	C135P ±61 S.F.
E	MEN'S TOILET	C135L ±61 S.F.
F	WOMEN'S TOILET	C135N ±61 S.F.
G	WOMEN'S TOILET	C135K ±61 S.F.
H	STORAGE	C135M ±67 S.F.
I	STORAGE	C135J ±138 S.F.
J	DATA	C135Q ±67 S.F.
K	OFFICE	C135S ±90 S.F.
L	OFFICE	C135R ±90 S.F.
M	OFFICE	C131H ±90 S.F.

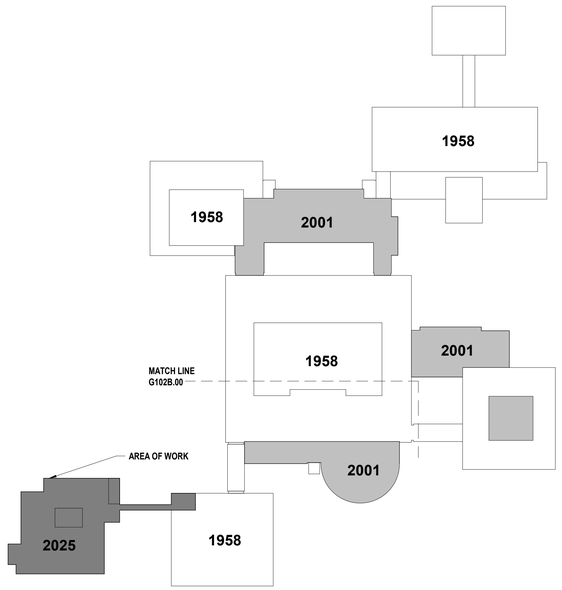

Key Plan
SCALE: 1" = 100'-0"

H2M architects + engineers
538 Broad Hollow Road, 4th Floor East
Melville, NY 11747
631.756.8000 • www.h2m.com
Architecture & Landscape Architecture: No Certificate Required
Engineering Certificate of Authorization No.: 0018178

CONSULTANTS:

MARK	DATE	DESCRIPTION

KEVIN M. MEDLER, R.A.
BY PROFESSIONAL ARCHITECT LIC. No. 036379

DESIGNED BY:	DRAWN BY:	CHECKED BY:	REVIEWED BY:
CWP	DOD/NPO	CWP/KMM	-
PROJECT No: WPSD 2203	DATE: MARCH 2025	SCALE: AS SHOWN	

CLIENT
WHITE PLAINS CITY SCHOOL DISTRICT

ADDITION AT WHITE PLAINS HIGH SCHOOL

550 NORTH STREET, WHITE PLAINS, NY 10605

66-22-00-01-0-016-030

CONTRACT
ALL CONTRACTS

STATUS
FINAL BID SET

SHEET TITLE
BUILDING 'A' & BUILDING 'C' EXISTING FIRST FLOOR PLAN

DRAWING No.
G 100b.00

C:\Users\ddesouza\Documents\WPSD2203_CentralZ1_A_DDdSouzaDRTL8.rvt

3/6/2025 2:52:47 PM

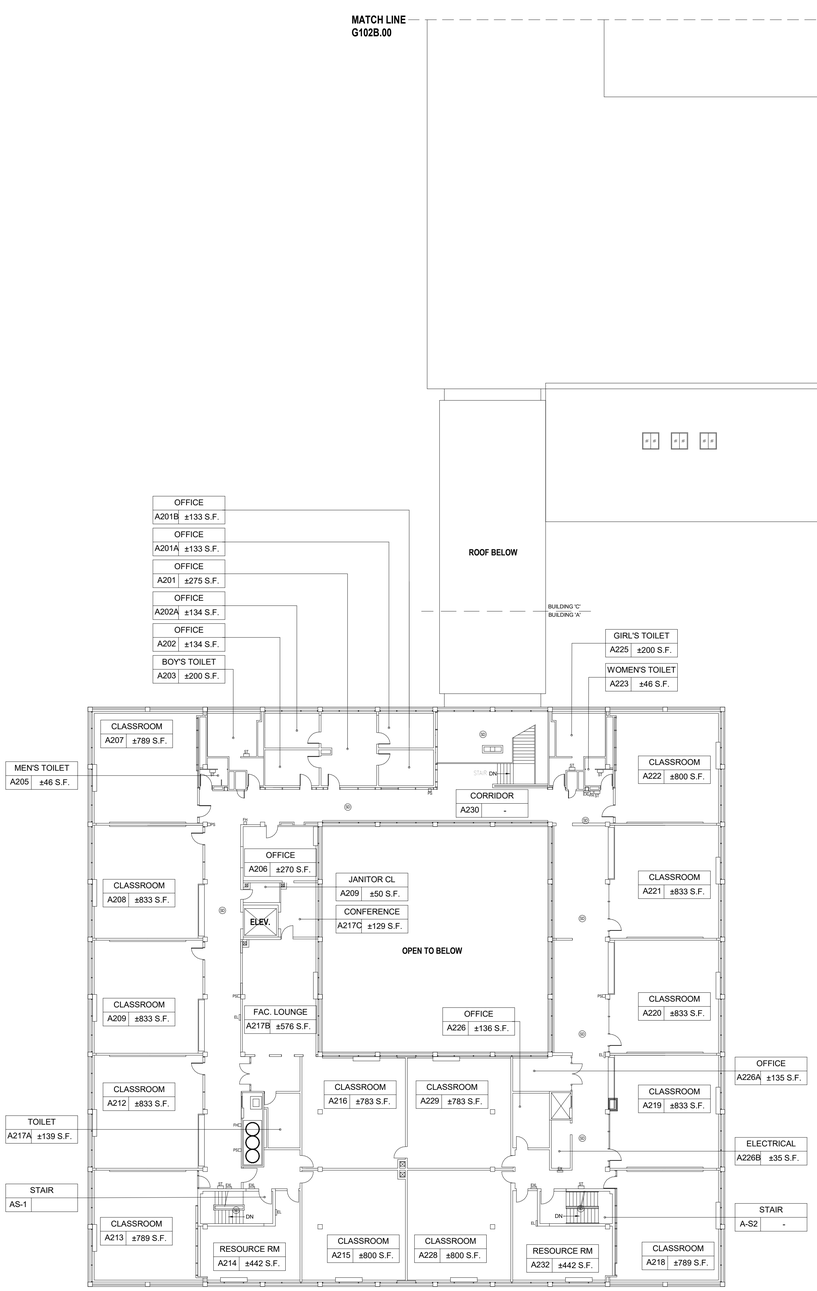

1 **Building 'A' Proposed Second Floor Plan**
SCALE: 1/16" = 1'-0"

LEGEND

ROOM 000 ± S.F.	ROOM NUMBER DESIGNATION TAG
F	EXISTING FIRE EXTINGUISHER
E	EXISTING EXIT SIGN
PS	EXISTING PULL STATION
ST	EXISTING FIRE ALARM STROBE
SD	EXISTING SMOKE DETECTOR
EW	EYE WASH STATION
	EMERGENCY LIGHTING

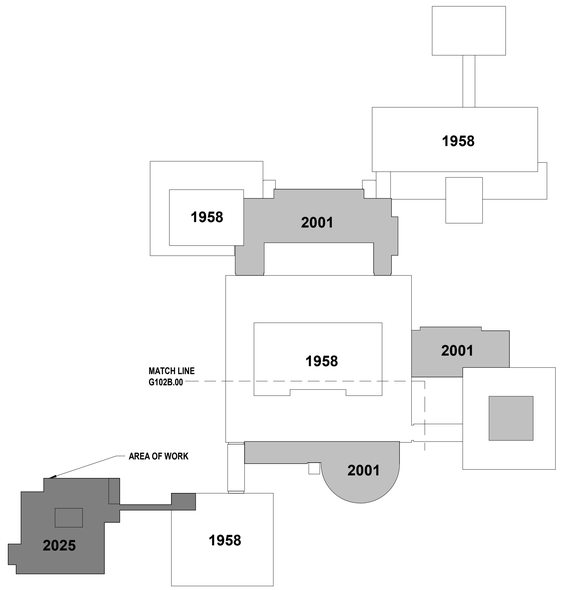

Key Plan
SCALE: 1" = 100'-0"

H2M architects + engineers
538 Broad Hollow Road, 4th Floor East
Melville, NY 11747
631.756.8000 • www.h2m.com
Architecture & Landscape Architecture: No Certificate Required
Engineering Certificate of Authorization No.: 0018178

CONSULTANTS:

MARK	DATE	DESCRIPTION

REGISTERED ARCHITECT KEVIN MICHAEL MEDLER 038379 STATE OF NEW YORK

07/01/2024
Exp. Date

KEVIN M. MEDLER, R.A.
NY PROFESSIONAL ARCHITECT Lic. No. 038379
"No. 1 DEPARTMENT OF THE DOCUMENT EXCEPT BY A LICENSED PROFESSIONAL ENGINEER IS A LICENSE."

DESIGNED BY:	DRAWN BY:	CHECKED BY:	REVIEWED BY:
CWP	DOD/NPO	CWP/KMM	
PROJECT No:	DATE:	SCALE:	
WPSD 2203	MARCH 2025	AS SHOWN	

CLIENT

WHITE PLAINS CITY SCHOOL DISTRICT

ADDITION AT WHITE PLAINS HIGH SCHOOL

White Plains Public Schools WP REAL LIFE LEARNING

550 NORTH STREET, WHITE PLAINS, NY 10605

66-22-00-01-0-016-030

CONTRACT

ALL CONTRACTS

STATUS

FINAL BID SET

SHEET TITLE

BUILDING 'A' EXISTING SECOND FLOOR PLAN

DRAWING No.

G 100c.00

C:\Users\ddesouza\Documents\WPSD2203_Central21_A_DDeSouza\DBTU8.rvt

3/6/2025 2:52:48 PM

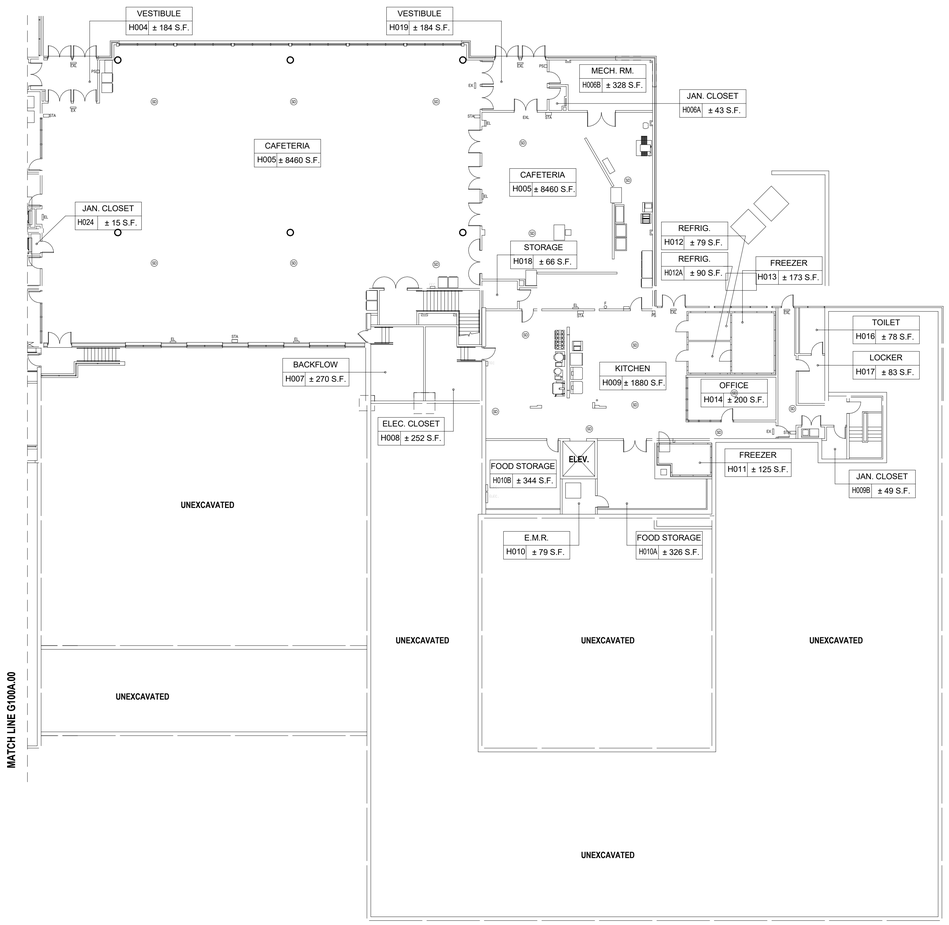

1 **Building 'B' Proposed Ground Floor Plan**
SCALE: 1/16" = 1'-0"

LEGEND

ROOM 000 ± S.F.	ROOM NUMBER DESIGNATION TAG
○F	EXISTING FIRE EXTINGUISHER
E	EXISTING EXIT SIGN
□PS	EXISTING PULL STATION
ST	EXISTING FIRE ALARM STROBE
SD	EXISTING SMOKE DETECTOR
EW	EYE WASH STATION
	EMERGENCY LIGHTING

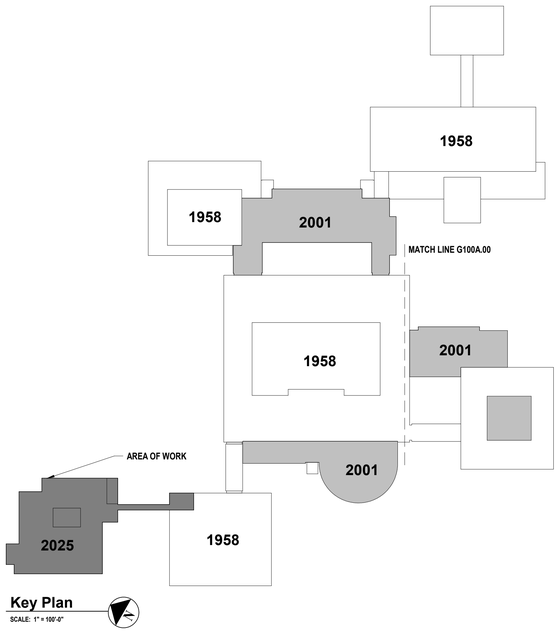

Key Plan
SCALE: 1" = 100'-0"

H2M architects + engineers
538 Broad Hollow Road, 4th Floor East
Melville, NY 11747
631.756.8000 • www.h2m.com
Architecture & Landscape Architecture: No Certificate Required
Engineering Certificate of Authorization No.: 0018178

CONSULTANTS:

MARK	DATE	DESCRIPTION

REGISTERED ARCHITECT KEVIN MICHAEL MEDLER 038379 STATE OF NEW YORK

07/01/2024
Exp. Date

KEVIN M. MEDLER, R.A.
NY PROFESSIONAL ARCHITECT Lic. No. 038379
"No. 038379 is the Department of Education Registration Number, NY 11.4.2-2024"

DESIGNED BY:	DRAWN BY:	CHECKED BY:	REVIEWED BY:
CWP	DOD/NPO	CWP/KMM	
PROJECT No: WPSD 2203	DATE: MARCH 2025	SCALE: AS SHOWN	

CLIENT
WHITE PLAINS CITY SCHOOL DISTRICT

ADDITION AT WHITE PLAINS HIGH SCHOOL

550 NORTH STREET, WHITE PLAINS, NY 10605

66-22-00-01-0-016-030

CONTRACT
ALL CONTRACTS

STATUS
FINAL BID SET

SHEET TITLE
BUILDING 'B' EXISTING GROUND FLOR PLAN

DRAWING No.
G 101a.00

C:\Users\ddesouza\Documents\WPSD2203_Central21_A_DDeSouzaD8TU8.rvt
3/6/2025 2:52:49 PM

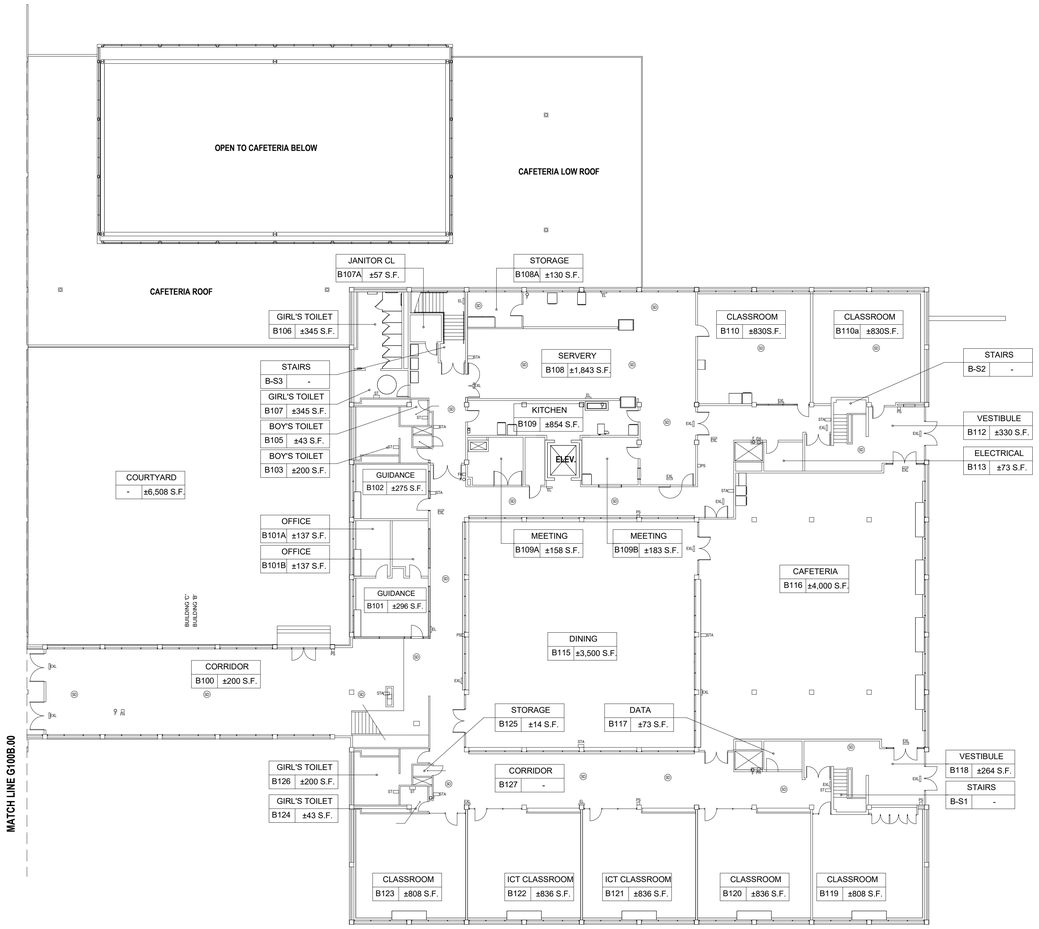

1 **Building 'B' Proposed First Floor Plan**
SCALE: 1/16" = 1'-0"

LEGEND

ROOM 000 ± S.F.	ROOM NUMBER DESIGNATION TAG
F	EXISTING FIRE EXTINGUISHER
E	EXISTING EXIT SIGN
PS	EXISTING PULL STATION
ST	EXISTING FIRE ALARM STROBE
SD	EXISTING SMOKE DETECTOR
EW	EYE WASH STATION
	EMERGENCY LIGHTING

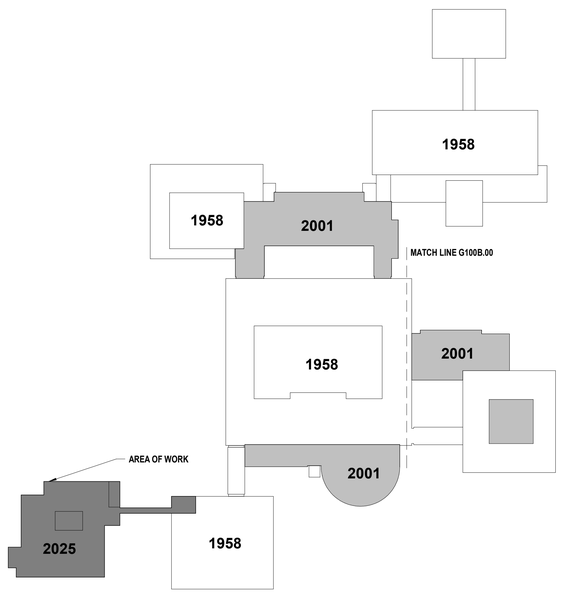

Key Plan
SCALE: 1" = 100'-0"

H2M architects + engineers
538 Broad Hollow Road, 4th Floor East
Melville, NY 11747
631.756.8000 • www.h2m.com
Architecture & Landscape Architecture: No Certificate Required
Engineering Certificate of Authorization No.: 0018178

CONSULTANTS:

MARK	DATE	DESCRIPTION

REGISTERED ARCHITECT KEVIN MICHAEL MEDLER 038379 STATE OF NEW YORK

07/01/2024
Exp. Date

KEVIN M. MEDLER, R.A.
NY PROFESSIONAL ARCHITECT Lic. No. 038379
"No reproduction of this document shall be allowed without written permission. Reproduction is a violation."

DESIGNED BY:	DRAWN BY:	CHECKED BY:	REVIEWED BY:
CWP	DOD/NPO	CWP/KMM	
PROJECT No: WPSD 2203	DATE: MARCH 2025	SCALE: AS SHOWN	

CLIENT
WHITE PLAINS CITY SCHOOL DISTRICT

ADDITION AT WHITE PLAINS HIGH SCHOOL

550 NORTH STREET, WHITE PLAINS, NY 10605

66-22-00-01-0-016-030

CONTRACT
ALL CONTRACTS

STATUS
FINAL BID SET

SHEET TITLE
BUILDING 'B' EXISTING FIRST FLOOR PLAN

DRAWING No.
G 101b.00

C:\Users\ddesouza\Documents\WPSD2203_Central21_A_DDeSouza\DBTU8.rvt
3/6/2025 2:52:50 PM

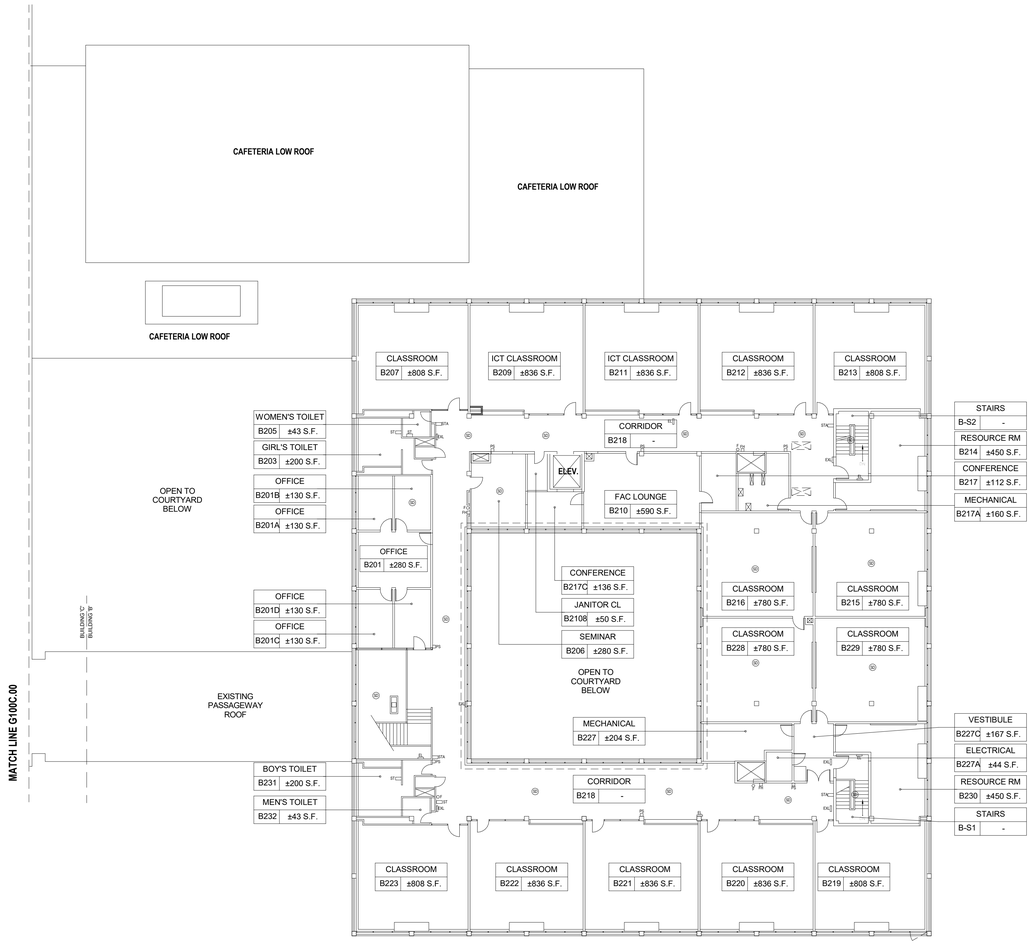

1 **Building 'B' Proposed Second Floor Plan**
SCALE: 1/16" = 1'-0"

LEGEND

ROOM 000 ± S.F.	ROOM NUMBER DESIGNATION TAG
F	EXISTING FIRE EXTINGUISHER
E	EXISTING EXIT SIGN
PS	EXISTING PULL STATION
ST	EXISTING FIRE ALARM STROBE
SD	EXISTING SMOKE DETECTOR
EW	EYE WASH STATION
	EMERGENCY LIGHTING

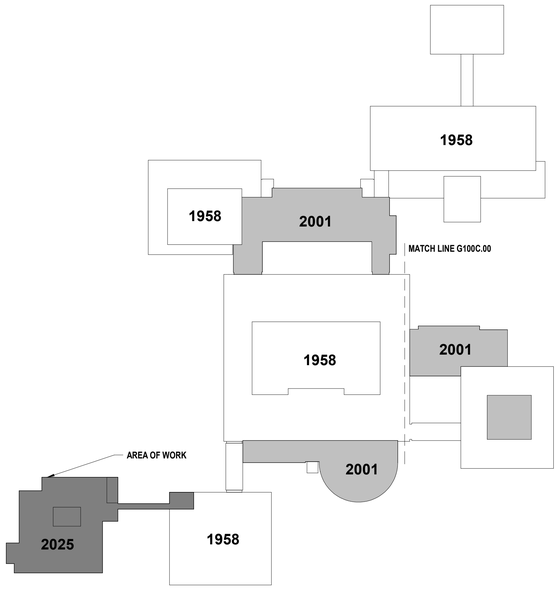

Key Plan
SCALE: 1" = 100'-0"

H2M architects + engineers
538 Broad Hollow Road, 4th Floor East
Melville, NY 11747
631.756.8000 • www.h2m.com
Architecture & Landscape Architecture: No Certificate Required
Engineering Certificate of Authorization No.: 0018178

CONSULTANTS:

MARK	DATE	DESCRIPTION

REGISTERED ARCHITECT KEVIN MICHAEL MEDLER 038379 STATE OF NEW YORK

07/01/2024
Exp. Date

KEVIN M. MEDLER, R.A.
NY PROFESSIONAL ARCHITECT Lic. No. 038379
"No. 1 DEPARTMENT OF THE DEPARTMENT OF EDUCATION OF THE STATE OF NEW YORK PROFESSIONAL IN CLASSES."

DESIGNED BY:	DRAWN BY:	CHECKED BY:	REVIEWED BY:
CWP	DOD/NPO	CWP/KMM	
PROJECT No: WPSD 2203	DATE: MARCH 2025	SCALE: AS SHOWN	

CLIENT
WHITE PLAINS CITY SCHOOL DISTRICT

ADDITION AT WHITE PLAINS HIGH SCHOOL

White Plains Public Schools WP REAL LIFE LEARNING

550 NORTH STREET, WHITE PLAINS, NY 10605

66-22-00-01-0-016-030

CONTRACT
ALL CONTRACTS

STATUS
FINAL BID SET

SHEET TITLE
BUILDING 'B' EXISTING SECOND FLOOR PLAN

DRAWING No.
G 101c.00

C:\Users\ddesouza\Documents\WPSD2203_Central21_A_DDeSouzaDBTU8.rvt
3/6/2025 2:52:51 PM

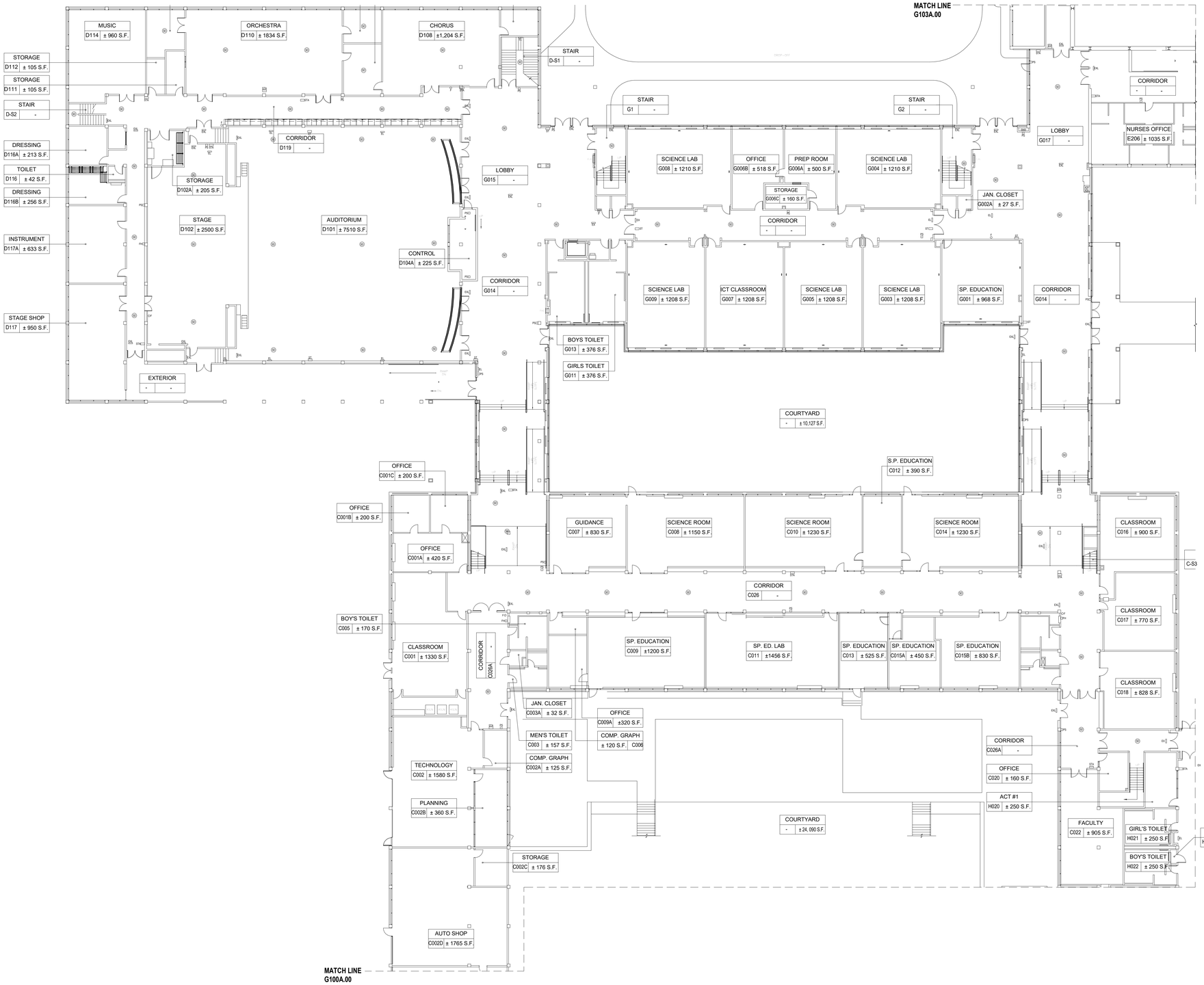

1 **Building 'C', Building 'D', Building 'G' Proposed Ground Floor Plan**
SCALE: 1/16" = 1'-0"

LEGEND

ROOM 000 ± S.F.	ROOM NUMBER DESIGNATION TAG
F	EXISTING FIRE EXTINGUISHER
E	EXISTING EXIT SIGN
PS	EXISTING PULL STATION
ST	EXISTING FIRE ALARM STROBE
SD	EXISTING SMOKE DETECTOR
EW	EYE WASH STATION
	EMERGENCY LIGHTING

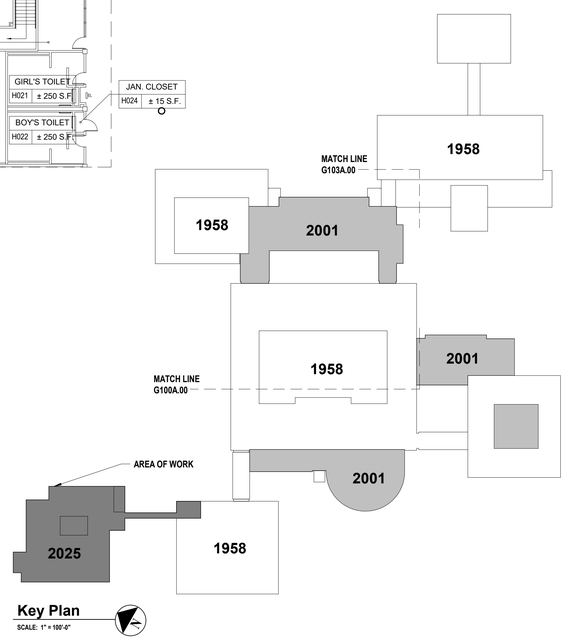

Key Plan
SCALE: 1" = 100'-0"

H2M architects + engineers
538 Broad Hollow Road, 4th Floor East
Melville, NY 11747
631.756.8000 • www.h2m.com
Architecture & Landscape Architecture: No Certificate Required
Engineering Certificate of Authorization No.: 0018178

CONSULTANTS:

MARK	DATE	DESCRIPTION

REGISTERED ARCHITECT KEVIN MICHAEL MEDLER 038379 STATE OF NEW YORK

KEVIN M. MEDLER, R.A.
NY PROFESSIONAL ARCHITECT Lic. No. 038379

DESIGNED BY:	DRAWN BY:	CHECKED BY:	REVIEWED BY:
CWP	DOD/NPO	CWP/KMM	
PROJECT No: WPSD 2203	DATE: MARCH 2025	SCALE: AS SHOWN	

CLIENT
WHITE PLAINS CITY SCHOOL DISTRICT

ADDITION AT WHITE PLAINS HIGH SCHOOL

550 NORTH STREET, WHITE PLAINS, NY 10605

66-22-00-01-0-016-030

CONTRACT
ALL CONTRACTS

STATUS
FINAL BID SET

SHEET TITLE
BUILDING 'C', BUILDING 'D', & BUILDING 'G' EXISTNG GROUND FLOOR PLAN

DRAWING No.
G 102a.00

C:\Users\ddesouza\Documents\WPSD2203_Central21_A_DDnSouzaDBTUB.rvt
3/6/2025 2:52:53 PM

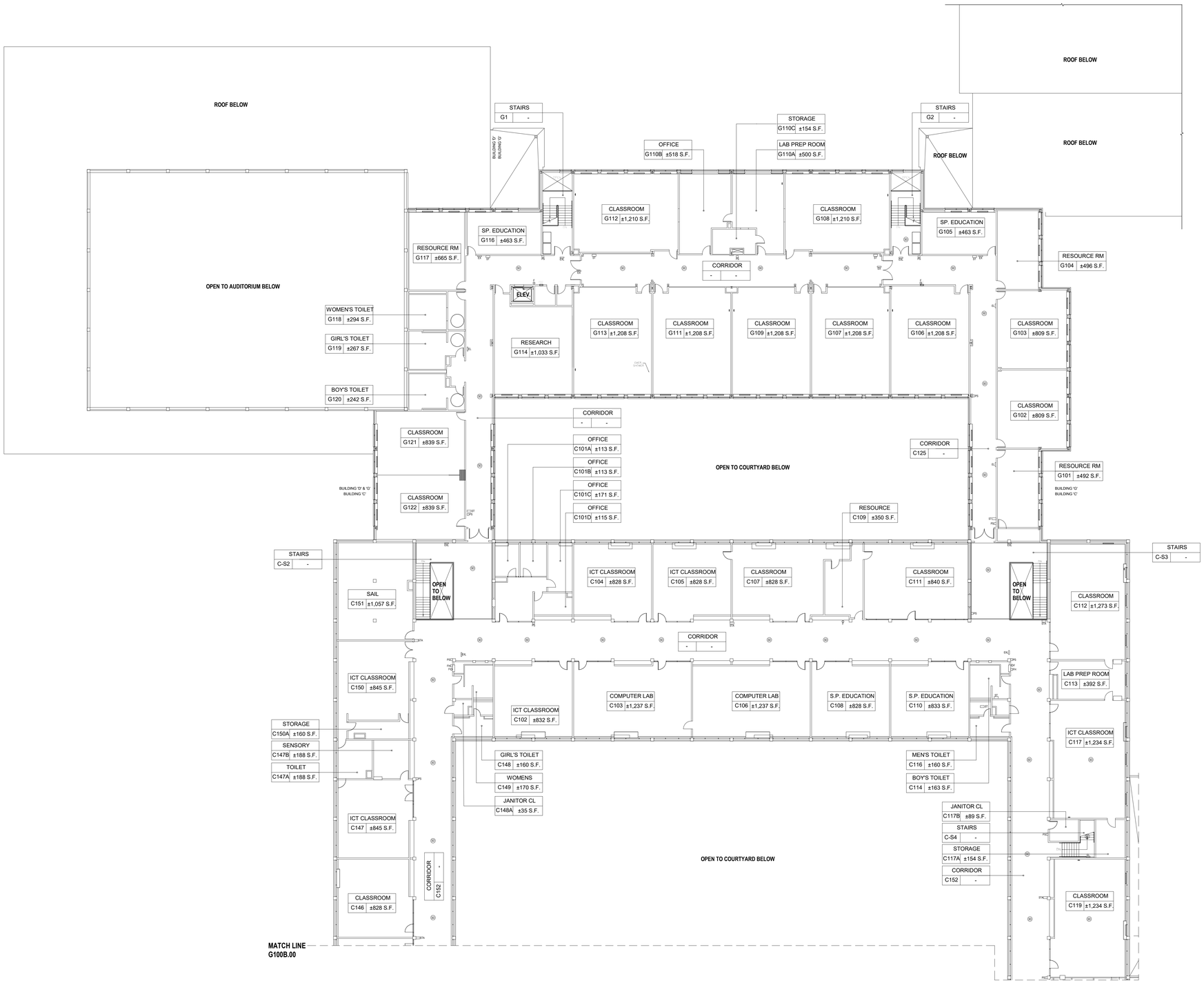

1 **Building 'G' Proposed First Floor Plan**
SCALE: 1/16" = 1'-0"

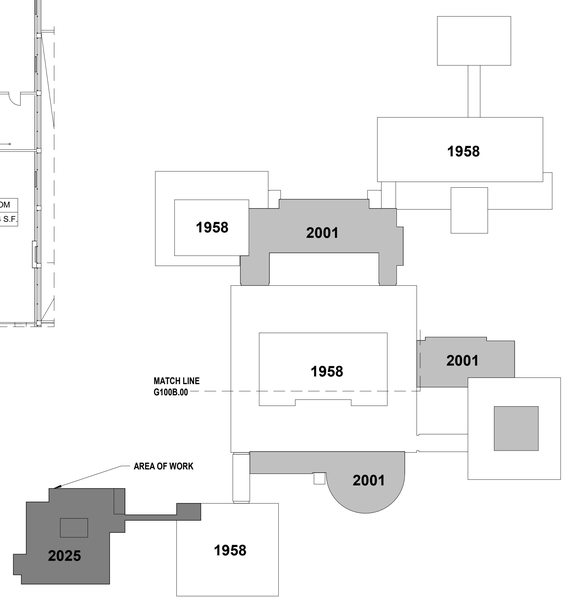

Key Plan
SCALE: 1" = 100'-0"

LEGEND

ROOM 000 ± S.F.	ROOM NUMBER DESIGNATION TAG
F	EXISTING FIRE EXTINGUISHER
E	EXISTING EXIT SIGN
PS	EXISTING PULL STATION
ST	EXISTING FIRE ALARM STROBE
SD	EXISTING SMOKE DETECTOR
EW	EYE WASH STATION
	EMERGENCY LIGHTING

H2M architects + engineers
538 Broad Hollow Road, 4th Floor East
Melville, NY 11747
631.756.8000 • www.h2m.com
Architecture & Landscape Architecture: No Certificate Required
Engineering Certificate of Authorization No.: 0018178

CONSULTANTS:

MARK	DATE	DESCRIPTION

REGISTERED ARCHITECT KEVIN MICHAEL MEDLER 038379 STATE OF NEW YORK

KEVIN M. MEDLER, R.A.
NY PROFESSIONAL ARCHITECT Lic. No. 038379

ST010924 Exp. Date

DESIGNED BY:	DRAWN BY:	CHECKED BY:	REVIEWED BY:
CWP	DOD/NPO	CWP/KMM	-
PROJECT No: WPSD 2203	DATE: MARCH 2025	SCALE: AS SHOWN	

CLIENT

WHITE PLAINS CITY SCHOOL DISTRICT

ADDITION AT WHITE PLAINS HIGH SCHOOL

White Plains Public Schools WP REAL LIFE LEARNING

550 NORTH STREET, WHITE PLAINS, NY 10605

66-22-00-01-0-016-030

CONTRACT: ALL CONTRACTS

STATUS: FINAL BID SET

SHEET TITLE: BUILDING 'C' & BUILDING 'G' EXISTING FIRST FLOOR PLAN

DRAWING No.: G 102b.00

C:\Users\ddesouza\Documents\WPSD2023_Central21_A_DDnSouzaDBTLB.rvt

3/6/2025 2:52:54 PM

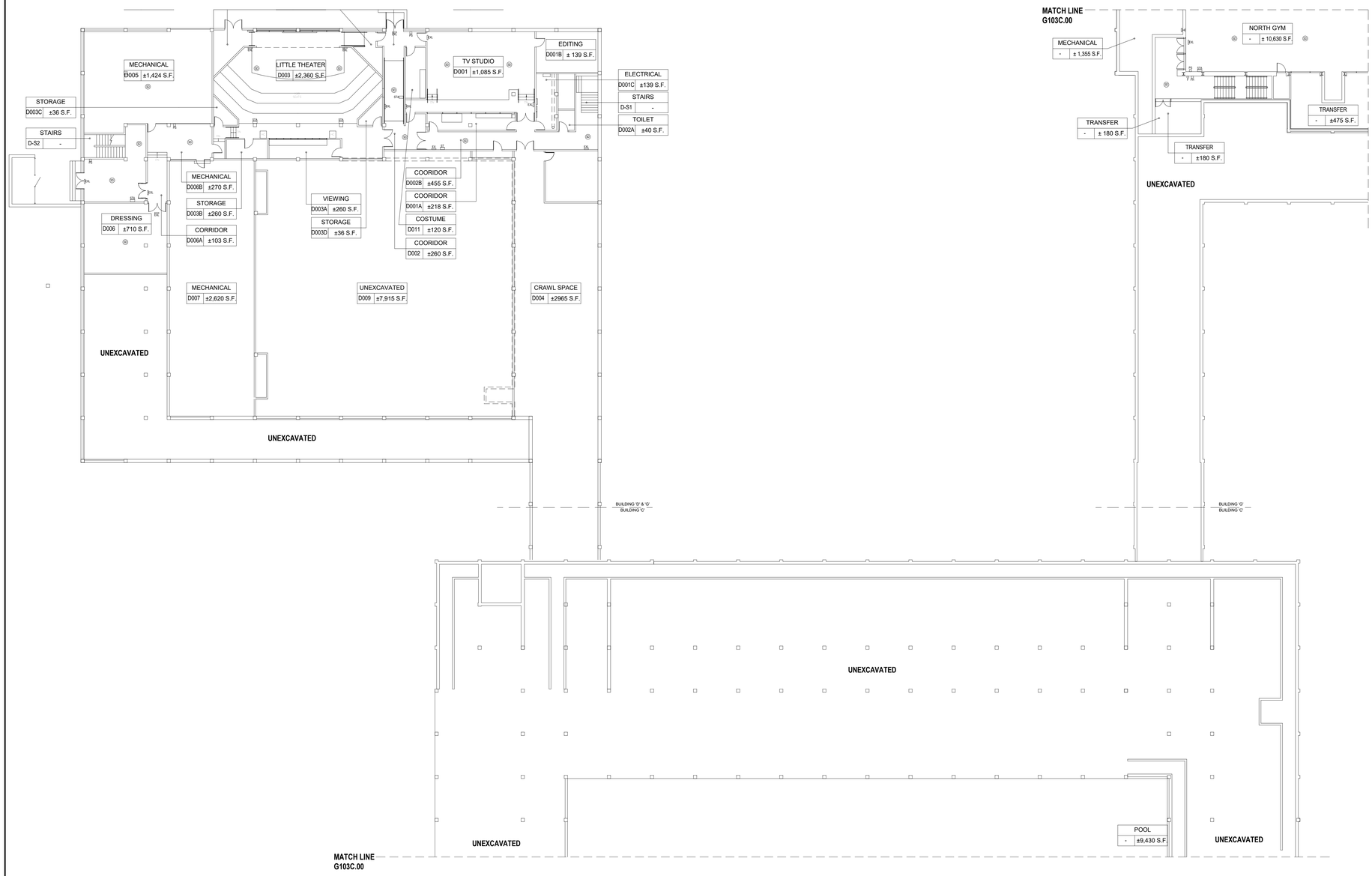

1 **Building 'D' Proposed Basement Floor Plan**
SCALE: 1/16" = 1'-0"

LEGEND

ROOM 000 ± S.F.	ROOM NUMBER DESIGNATION TAG
F	EXISTING FIRE EXTINGUISHER
E	EXISTING EXIT SIGN
PS	EXISTING PULL STATION
ST	EXISTING FIRE ALARM STROBE
SD	EXISTING SMOKE DETECTOR
EW	EYE WASH STATION
	EMERGENCY LIGHTING

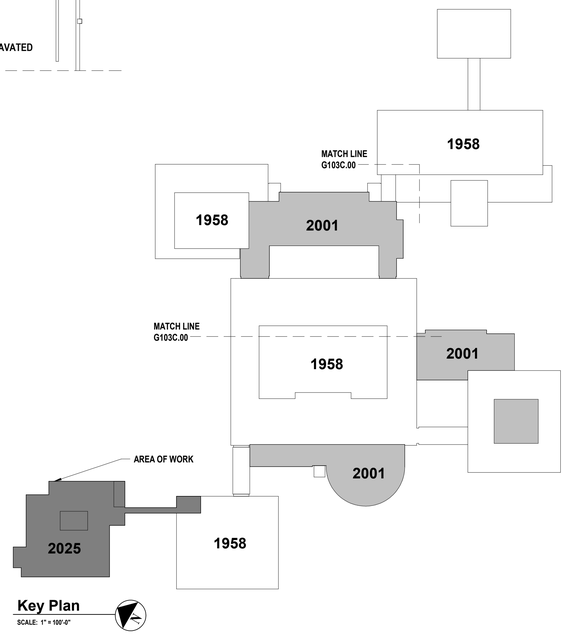

Key Plan
SCALE: 1" = 100'-0"

H2M architects + engineers
538 Broad Hollow Road, 4th Floor East
Melville, NY 11747
631.756.8000 • www.h2m.com
Architecture & Landscape Architecture: No Certificate Required
Engineering Certificate of Authorization No.: 0018178

CONSULTANTS:

MARK	DATE	DESCRIPTION

REGISTERED ARCHITECT KEVIN MICHAEL MEDLER 038379 STATE OF NEW YORK

07/31/2024
Exp. Date

KEVIN M. MEDLER, R.A.
NY PROFESSIONAL ARCHITECT Lic. No. 038379
"No transfer of this document except as a certified professional is valid."

DESIGNED BY:	DRAWN BY:	CHECKED BY:	REVIEWED BY:
CWP	DOD/NPO	CWP/KMM	
PROJECT No:	DATE:	SCALE:	
WPSD 2203	MARCH 2025	AS SHOWN	

CLIENT
WHITE PLAINS CITY SCHOOL DISTRICT

ADDITION AT WHITE PLAINS HIGH SCHOOL

White Plains Public Schools WP REAL LIFE LEARNING

550 NORTH STREET, WHITE PLAINS, NY 10605

66-22-00-01-0-016-030

CONTRACT
ALL CONTRACTS

STATUS
FINAL BID SET

SHEET TITLE
BUILDING 'D' EXISTING LOWER FLOOR PLAN

DRAWING No.
G 102c.00

C:\Users\ddesouza\Documents\WPSD2203_Central21_A_DDeSouza\D8TU8.rvt
3/6/2025 2:52:55 PM

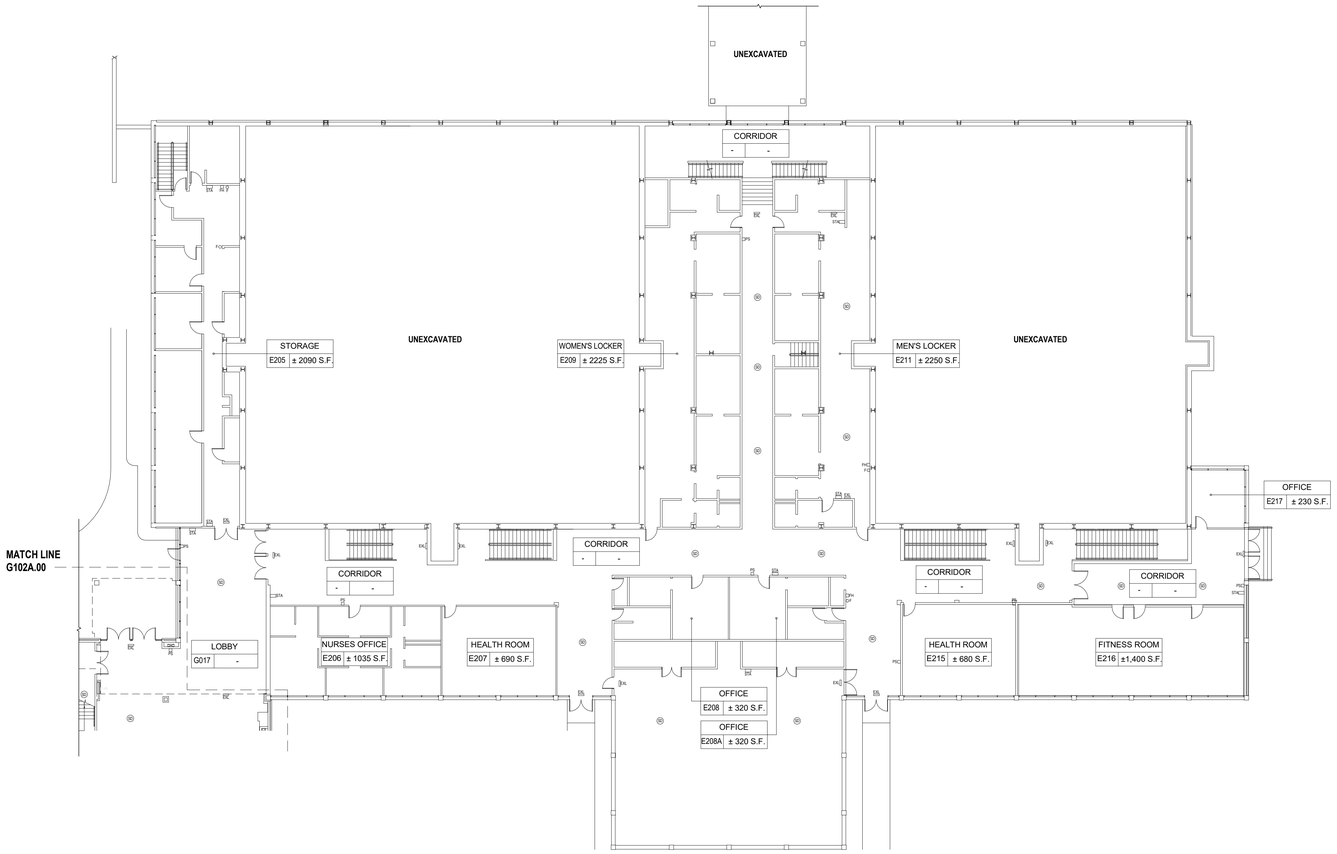

1 Building 'E' Proposed Ground Floor Plan
SCALE: 1/16" = 1'-0"

LEGEND

ROOM 000 ± S.F.	ROOM NUMBER DESIGNATION TAG
F	EXISTING FIRE EXTINGUISHER
E	EXISTING EXIT SIGN
PS	EXISTING PULL STATION
ST	EXISTING FIRE ALARM STROBE
SD	EXISTING SMOKE DETECTOR
EW	EYE WASH STATION
	EMERGENCY LIGHTING

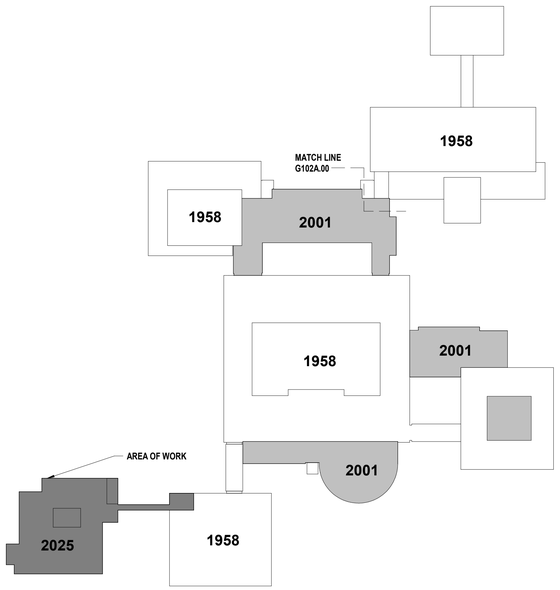

Key Plan
SCALE: 1" = 100'-0"

H2M architects + engineers
538 Broad Hollow Road, 4th Floor East
Melville, NY 11747
631.756.8000 • www.h2m.com
Architecture & Landscape Architecture: No Certificate Required
Engineering Certificate of Authorization No.: 0018178

CONSULTANTS:

MARK	DATE	DESCRIPTION

REGISTERED ARCHITECT KEVIN MICHAEL MEDLER 038379 STATE OF NEW YORK

07/01/2024
Exp. Date

KEVIN M. MEDLER, R.A.
NY PROFESSIONAL ARCHITECT Lic. No. 038379
"No TRANSFERS OF THIS DOCUMENT EXCEPT BY A LICENSED PROFESSIONAL IN CLASSICAL"

DESIGNED BY:	DRAWN BY:	CHECKED BY:	REVIEWED BY:
CWP	DOD/NPO	CWP/KMM	
PROJECT No: WPSD 2203	DATE: MARCH 2025	SCALE: AS SHOWN	

CLIENT
WHITE PLAINS CITY SCHOOL DISTRICT

ADDITION AT WHITE PLAINS HIGH SCHOOL

White Plains Public Schools WP REAL LIFE LEARNING

550 NORTH STREET, WHITE PLAINS, NY 10605

66-22-00-01-0-016-030

CONTRACT
ALL CONTRACTS

STATUS
FINAL BID SET

SHEET TITLE
BUILDING 'E' EXISTING GROUND FLOOR PLAN

DRAWING No.
G 103a.00

C:\Users\ddesouza\Documents\WPSD2203_Central21_A_DDeSouza\D8TU8.rvt
3/6/2025 2:52:56 PM

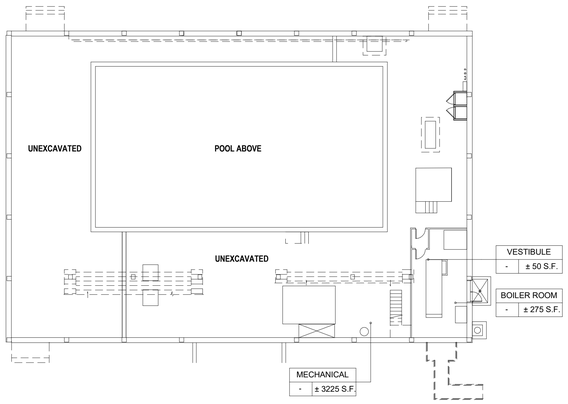

1 Building 'F' Proposed Partial Basement Floor Plan
SCALE: 1/16" = 1'-0"

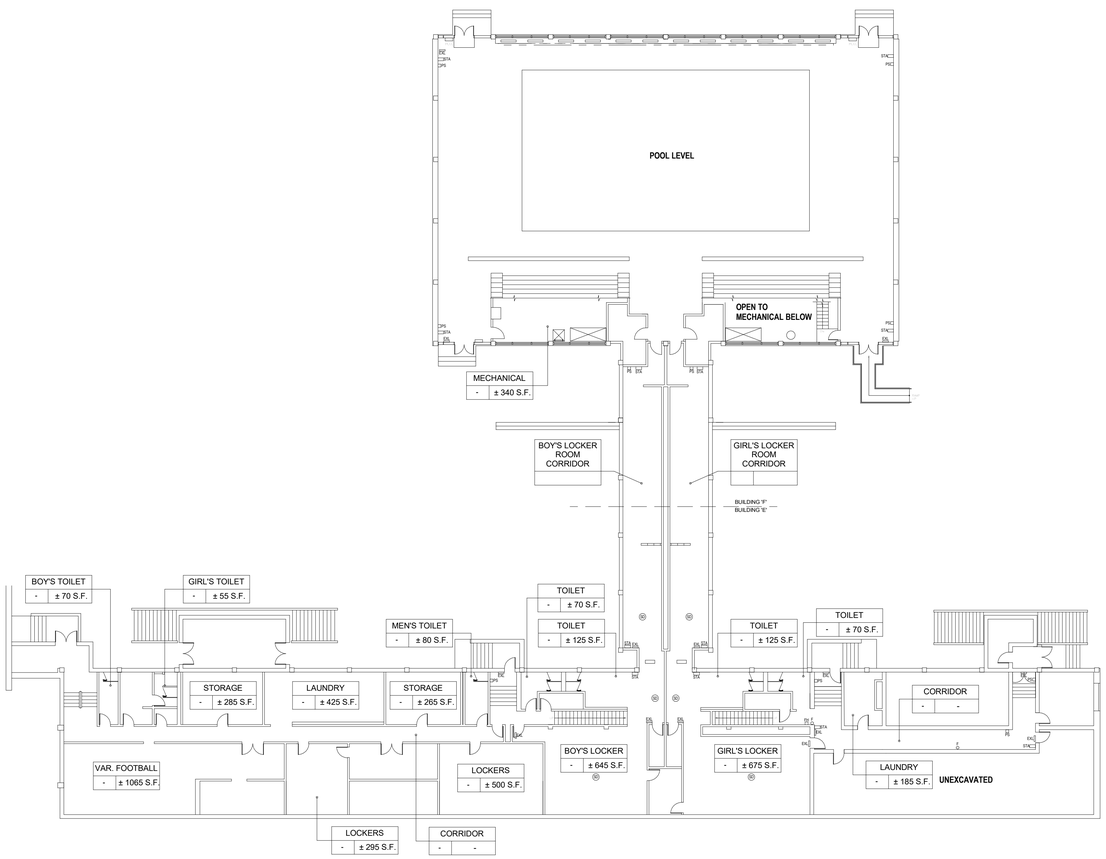

2 Building 'E' & 'F' Proposed Ground Floor Plan
SCALE: 1/16" = 1'-0"

LEGEND

ROOM 000 ± S.F.	ROOM NUMBER DESIGNATION TAG
F	EXISTING FIRE EXTINGUISHER
E	EXISTING EXIT SIGN
PS	EXISTING PULL STATION
ST	EXISTING FIRE ALARM STROBE
SD	EXISTING SMOKE DETECTOR
EW	EYE WASH STATION
	EMERGENCY LIGHTING

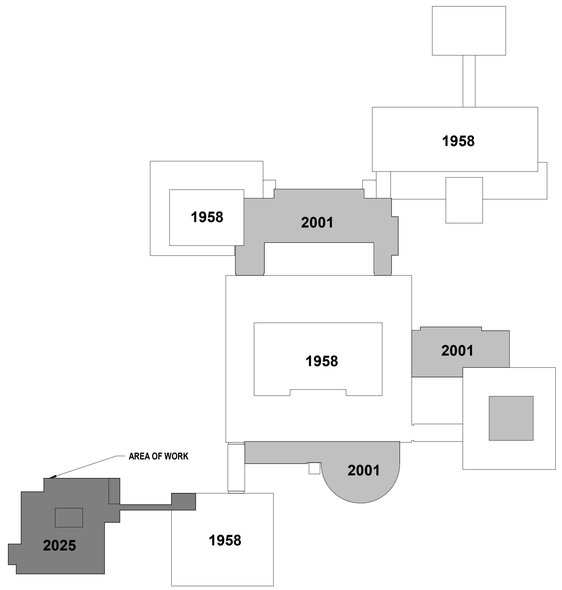

Key Plan
SCALE: 1" = 100'-0"

H2M architects + engineers
538 Broad Hollow Road, 4th Floor East
Melville, NY 11747
631.756.8000 • www.h2m.com
Architecture & Landscape Architecture: No Certificate Required
Engineering Certificate of Authorization No.: 0018178

CONSULTANTS:

MARK	DATE	DESCRIPTION

REGISTERED ARCHITECT KEVIN MICHAEL MEDLER 038379 STATE OF NEW YORK

KEVIN M. MEDLER, R.A.
NY PROFESSIONAL ARCHITECT Lic. No. 038379

ST010924 Exp. Date
"IN TRANSITION OF THIS DOCUMENT EFFECTIVE BY A LICENSED PROFESSIONAL IN ILLINOIS."

DESIGNED BY:	DRAWN BY:	CHECKED BY:	REVIEWED BY:
CWP	DOD/NPO	CWP/KMM	-
PROJECT No: WPSD 2203	DATE: MARCH 2025	SCALE: AS SHOWN	

CLIENT
WHITE PLAINS CITY SCHOOL DISTRICT

ADDITION AT WHITE PLAINS HIGH SCHOOL

550 NORTH STREET, WHITE PLAINS, NY 10605

66-22-00-01-0-016-030

CONTRACT
ALL CONTRACTS

STATUS
FINAL BID SET

SHEET TITLE
BUILDING 'E' & BUILDING 'F' EXISTING POOL FLOOR PLAN AND PARTIAL BASEMENT FLOOR PLAN

DRAWING No.
G 103b.00

C:\Users\ddesouza\Documents\WPSD2203_Central21_A_DDoSouzaDBTLB.rvt
3/6/2025 2:52:57 PM

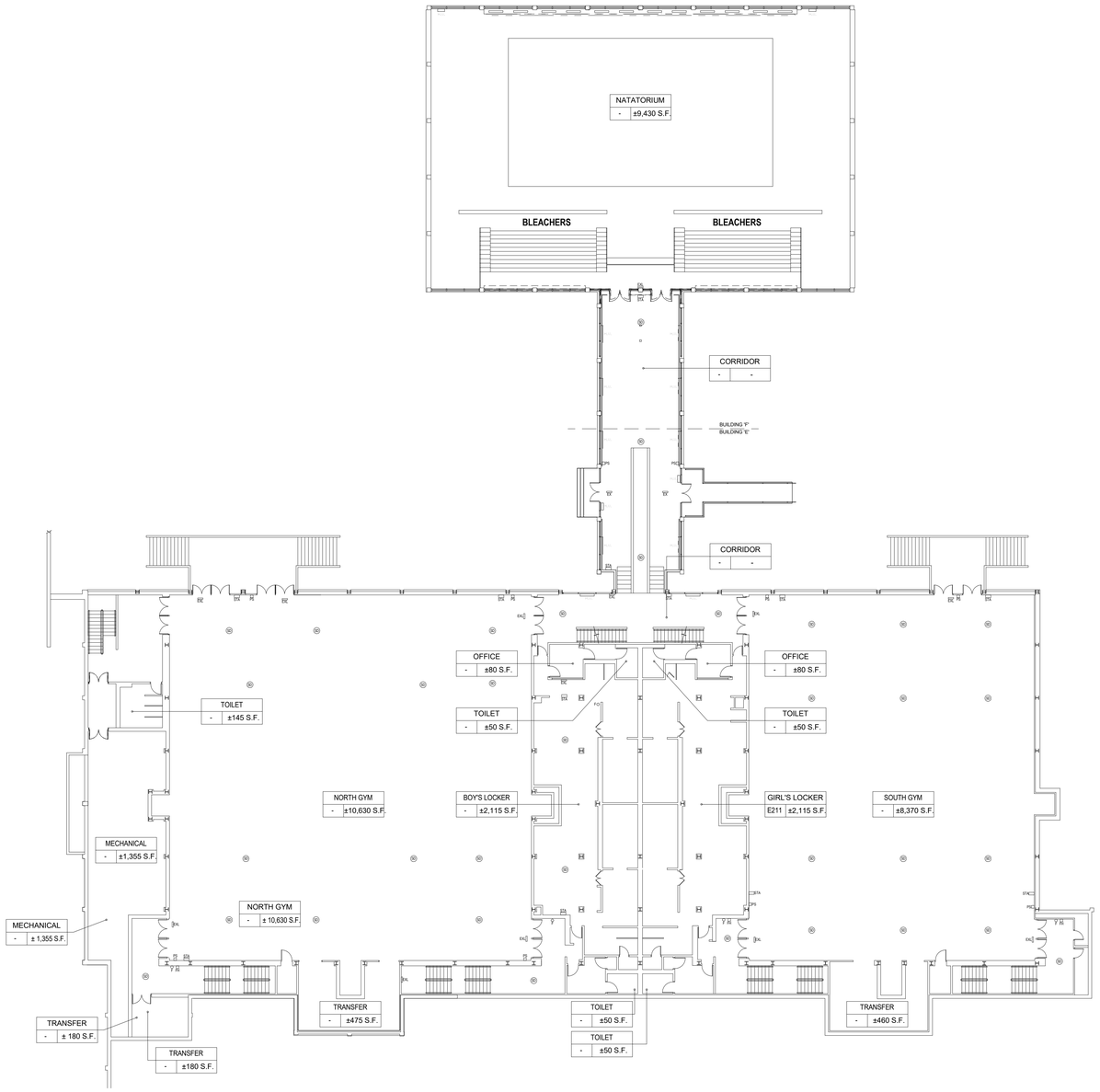

1 **Building 'E' & 'F' Proposed First Floor Gym**
SCALE: 1/16" = 1'-0"

LEGEND

ROOM 000 ± S.F.	ROOM NUMBER DESIGNATION TAG
F	EXISTING FIRE EXTINGUISHER
E	EXISTING EXIT SIGN
PS	EXISTING PULL STATION
ST	EXISTING FIRE ALARM STROBE
SD	EXISTING SMOKE DETECTOR
EW	EYE WASH STATION
	EMERGENCY LIGHTING

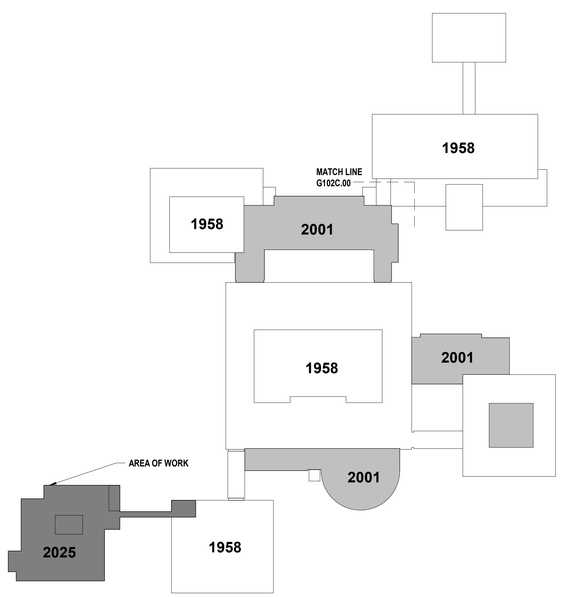

Key Plan
SCALE: 1" = 100'-0"

H2M architects + engineers
538 Broad Hollow Road, 4th Floor East
Melville, NY 11747
631.756.8000 • www.h2m.com
Architecture & Landscape Architecture: No Certificate Required
Engineering Certificate of Authorization No.: 0018178

CONSULTANTS:

MARK	DATE	DESCRIPTION

KEVIN M. MEDLER, R.A.
NY PROFESSIONAL ARCHITECT Lic. No. 038379

DESIGNED BY:	DRAWN BY:	CHECKED BY:	REVIEWED BY:
CWP	DOD/NPO	CWP/KMM	
PROJECT No: WPSD 2203	DATE: MARCH 2025	SCALE: AS SHOWN	

CLIENT
WHITE PLAINS CITY SCHOOL DISTRICT

ADDITION AT WHITE PLAINS HIGH SCHOOL

550 NORTH STREET, WHITE PLAINS, NY 10605

66-22-00-01-0-016-030

CONTRACT
ALL CONTRACTS

STATUS
FINAL BID SET

SHEET TITLE
BUILDING 'E' & BUILDING 'F' EXISTING GYM FLOOR PLAN

DRAWING No.
G 103c.00

C:\Users\dsteuerud\Documents\WPSD2203_Central\21 A_DDw\Source\BTL\B.rvt
3/6/2025 2:52:28 PM

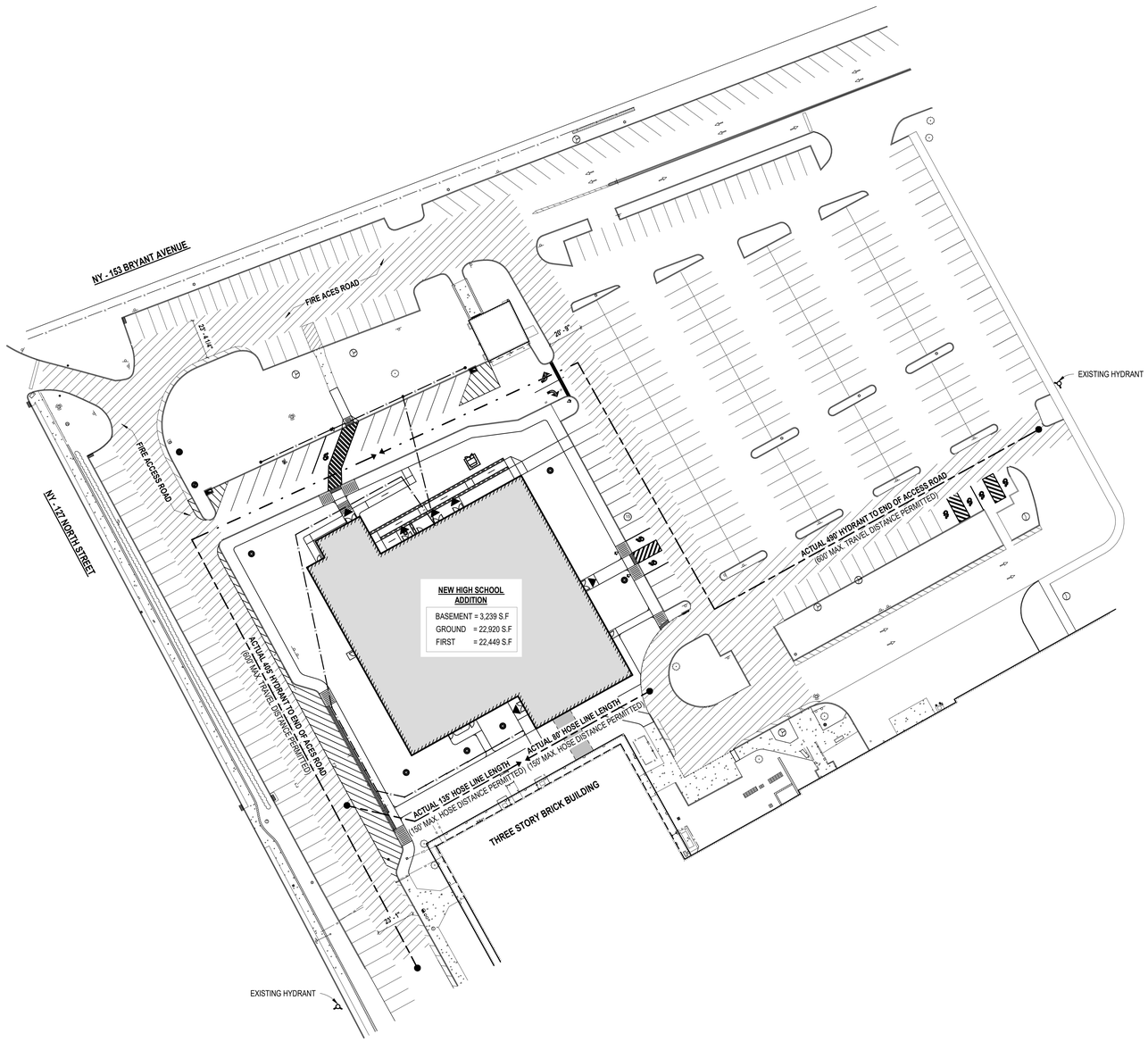

1 **FIRE ACCESS ROAD SITE PLAN**
SCALE: 1/32" = 1'-0"

CHAPTER 6 - CLASSIFICATION OF WORK

CODE SECTION	REQUIRED/ALLOWED	ACTUAL AND PROPOSED
SECTION 601.2 WORK AREA	APPLIES- THE WORK AREA AS DEFINED IN CHAPTER 2, SHALL BE IDENTIFIED ON THE CONSTRUCTION DOCUMENTS	REFER TO "PROJECT SCOPE" DESCRIPTION FOR WORK DONE WITHIN THE EXISTING BUILDING AND INCLUDED UNDER THIS APPLICATION.
SECTION 604.1 ALTERATION-LEVEL 2	APPLIES- LEVEL 2 ALTERATIONS COMPLIES WITH THE APPLICABLE PROVISIONS OF SECTIONS 602 AND 603.	EXISTING BUILDING TO COMPLY, REFER TO 'PROJECT SCOPE' DESCRIPTION.

2020 EXISTING BUILDING CODE OF NEW YORK STATE COMPLIANCE

EBCNYS CHAPTER 6 - CLASSIFICATION OF WORK

SECTION 601- ALTERATION - LEVEL 2
601.2 SCOPE: LEVEL 2 ALTERATIONS SHALL APPLY WHERE THE WORK AREA IS LESS THAN 50 PERCENT OF THE BUILDING AREA

603 APPLICATION: LEVEL 2 ALTERATIONS AS DESCRIBED IN SECTION 601.2 SHALL COMPLY WITH THE REQUIREMENTS OF CHAPTER 7 AND 8 FOR LEVEL 1 ALTERATIONS AND LEVEL 2 ALTERATIONS RESPECTIVELY.

EBCNYS CHAPTER 9 - ALTERATIONS - LEVEL 2

SECTION 901 - GENERAL
901.1 SCOPE: LEVEL 2 ALTERATIONS AS DESCRIBED IN SECTION 603 SHALL COMPLY WITH THE REQUIREMENTS OF THIS CHAPTER.

ALTERATION WORK AT THIS BUILDING CONSISTS OF THE FOLLOWING:

EXTERIOR
1. REMOVAL AND REPLACEMENT OF EXTERIOR WALLS AND OPENINGS
2. REMOVAL AND REPLACEMENT OF EXTERIOR WALL FINISHES
3. MODIFY MECHANICAL AND ELECTRICAL TO ACCOMMODATE ADDITON.

INTERIOR
1. REMOVAL AND REPLACEMENT OF CLASSROOM FINISHES.

2020 EBCNYS CHAPTER 8 ALTERATIONS - LEVEL 2

CODE SECTION	REQUIRED/ALLOWED	ACTUAL AND PROPOSED
SECTION 801.2 COMPLIANCE	IN ADDITION TO THE REQUIREMENTS OF CHAPTER 8, ALL WORK SHALL COMPLY WITH THE REQUIREMENTS OF CHAPTER 7	COMPLIES.
SECTION 802 BUILDING ELEMENTS AND MATERIALS	EXISTING VERTICAL OPENINGS SHALL COMPLY WITH THE PROVISIONS OF SECTION 802.2.1, 802.2.2, AND 802.2.3 FROM THE HIGHEST WORK AREA FLOOR TO THE LEVEL OF EXIST DISCHARGE AND FLOORS BELOW.	COMPLIES.
SECTION 803 FIRE PROTECTION	AUTOMATIC SPRINKLERS SYSTEMS SHALL BE PROVIDED IN ACCORDANCE WITH THE REQUIREMENTS OF SECTIONS 803.2.1 - 803.2.6 AND THE IBC.	COMPLIES.
SECTION 803.4 FIRE ALARM AND DETECTION	AN APPROVED FIRE ALARM SYSTEM AND DETECTION SYSTEM SHALL BE INSTALLED IN ACCORDANCE WITH THIS SECTION OF THE BUILDING CODE OF NYS.	COMPLIES.
SECTION 804 MEANS OF EGRESS	MEANS OF EGRESS SHALL COMPLY WITH THE REQUIREMENTS OF SECTION 804.2, 804.4, AND 804.5	COMPLIES.
SECTION 804 STRUCTURAL	DOES NOT APPLY.	
SECTION 809 ENERGY CONSERVATION	LEVEL 2 ALTERATIONS TO EXISTING BUILDINGS ARE PERMITTED WITHOUT REQUIRING THE ENTIRE BUILDING TO COMPLY WITH THE ENERGY REQUIREMENTS. THE ALTERATIONS SHALL CONFORM TO THE ENERGY REQUIREMENTS OF THE IECC.	COMPLIES.

ENERGY CONSERVATION CONSTRUCTION CODE OF NEW YORK STATE

EXTERIOR DESIGN CONDITIONS PER TABLE 301.1

COUNTY: WESTCHESTER
WINTER DESIGN DRY-BULB TEMP: 13° F
SUMMER DESIGN DRY-BULB TEMP: 92° F
COINCIDENT WET-BULB TEMP: 77° F

HEATING DEGREE DAYS: 65° F

ZONE: 4A

BUILDING ENVELOPE REQUIREMENTS PER TABLE 802.2(2), 402.1.4 & 402.4

NOTE: FOR THE FOLLOWING INFORMATION, REFER TO COMCHECK AS REQUIRED.

GENERAL CODE NOTES

1. ALL INTERIOR WALL AND CEILING FINISHES SHALL MEET OR EXCEED THE REQUIREMENTS IDENTIFIED IN TABLE 803.13 OF THE 2020 BCNYS.
2. THIS FACILITY WILL BE EQUIPPED THROUGHOUT WITH AN AUTOMATIC FIRE SPRINKLER SYSTEM THAT COMPLIES WITH NFPA 13 AND SECTION 903 OF THE 2020 BCNYS. SEE 'FP' DRAWINGS FOR ADDITIONAL INFORMATION.
3. THIS FACILITY WILL BE EQUIPPED WITH FULLY ADDRESSABLE FIRE ALARM AND SMOKE DETECTION SYSTEM THAT COMPLIES WITH NFPA 72 AND SECTION 907 OF THE 2020 BCNYS. REFER TO 'FA' DRAWINGS FOR ADDITIONAL INFORMATION.
4. PORTABLE FIRE EXTINGUISHERS SHALL BE PROVIDED AS INDICATED IN SECTION 906 OF THE 2020 BCNYS TABLE 906.1 AND TABLE 906.3 OF THE BCNYS. PORTABLE FIRE EXTINGUISHERS SHALL ALSO BE SELECTED AND INSTALLED IN ACCORDANCE WITH NFPA 10. SEE CODE COMPLIANCE PLANS FOR QUANTITIES AND LOCATIONS OF EXTINGUISHERS.
5. MAXIMUM FLOOR AREA ALLOWANCES PER OCCUPANT INDICATED ON CODE COMPLIANCE PLANS ARE AS INDICATED ON TABLE 1004.5 OF THE 2020 BCNYS.
6. THE MINIMUM CORRIDOR WIDTH SHALL NOT BE LESS THAN 44" PER SECTION 1020.2 OF THE 2020 BCNYS.
7. AS PER SECTION 1105.1 OF THE 2020 BCNYS, 60% OF ALL PUBLIC ENTRANCES MUST BE ACCESSIBLE. FOUR (4) OF THE FOUR (4) ENTRANCES INTO THE BUILDING ARE ACCESSIBLE. (67%) SEE CODE COMPLIANCE PLAN FOR LOCATIONS AND ADDITIONAL INFORMATION.
8. AS PER TABLE 1106.1 OF THE 2020 BCNYS, THREE (3) ACCESSIBLE PARKING SPACE IS REQUIRED WHEN THE TOTAL PARKING SPACES RANGE BETWEEN 1-25. (NOTE: THE MINIMUM REQUIRED BY THE BCNYS MAY BE SUPERSEDED BY LOCAL ZONING ORDINANCE)
9. ALL GLAZING IN DOORS, FIXED SIDE PANELS ADJOINING DOORS, INTERIOR PARTITIONS WHERE GLAZING EXTENDS TO WITHIN 1'-6" OF FINISHED FLOOR AND GLASS PANELS GREATER THAN 50 SF TO BE FULLY TEMPERED SAFETY GLASS PER CHAPTER 24 OF THE 2020 BCNYS.
10. ELECTRICAL ROOM B02 EXIT DOOR TO RECEIVE PANIC HARDWARE - REFER TO DOOR SCHEDULE FOR ADDITIONAL INFORMATION.

OCCUPANCY & CONSTRUCTION CLASSIFICATION & AUTOMATIC SPRINKLER SYSTEM

OCCUPANCY CLASSIFICATION AND USE DESIGNATION PER 2020 BCNYS SECTION 304 = EDUCATIONAL GROUP E

CONSTRUCTION CLASSIFICATION PER 2020 BCNYS SECTION 602 = TYPE IIB

BUILDING EQUIPPED WITH AN AUTOMATIC SPRINKLER SYSTEM INSTALLED IN ACCCORDANCE WITH SECTION 903.3.1.1

APPLICABLE CODES

2020 BUILDING CODE OF NEW YORK STATE
2020 MECHANICAL CODE OF NEW YORK STATE
2020 PLUMBING CODE OF NEW YORK STATE
2020 ENERGY CONSERVATION CONSTRUCTION CODE OF NEW YORK STATE
ICC/ANSI A117.1-2009 ACCESSIBLE AND USABLE BUILDINGS AND FACILITIES
2017 NATIONAL ELECTRIC CODE (NFPA-70)
2020 FIRE CODE OF NEW YORK STATE

H2M architects + engineers
538 Broad Hollow Road, 4th Floor East
Melville, NY 11747
631.756.8000 • www.h2m.com
Architecture & Landscape Architecture: No Certificate Required
Engineering Certificate of Authorization No.: 0018178

CONSULTANTS:

MARK	DATE	DESCRIPTION

REGISTERED ARCHITECT KEVIN MICHAEL MEDLER STATE OF NEW YORK 038379

KEVIN M. MEDLER, R.A.
NY PROFESSIONAL ARCHITECT Lic. No. 038379
THE PROFESSIONAL STAMP AND SIGNATURE ARE REQUIRED ONLY FOR DOCUMENTS THAT HAVE BEEN SUBMITTED TO REGULATORY AGENCIES FOR REVIEW OR APPROVAL.

ST010924
Exp. Date

DESIGNED BY:	DRAWN BY:	CHECKED BY:	REVIEWED BY:
CWP	DOD/NPO	Checker	

PROJECT No:	DATE:	SCALE:
WPSD 2203	MARCH 2025	AS SHOWN

CLIENT
WHITE PLAINS CITY SCHOOL DISTRICT

ADDITION AT WHITE PLAINS HIGH SCHOOL

550 NORTH STREET, WHITE PLAINS, NY 10605

66-22-00-01-0-016-030

CONTRACT
ALL CONTRACTS

STATUS
FINAL BID SET

SHEET TITLE
NEW YORK STATE CODE ANALYSIS - CODE SITE PLAN

DRAWING No.
G 110.00

C:\Users\ddesouza\Documents\WPSD2203_Central\21_A_ODeSouza\G9T108.rvt
3/6/2025 2:53:01 PM

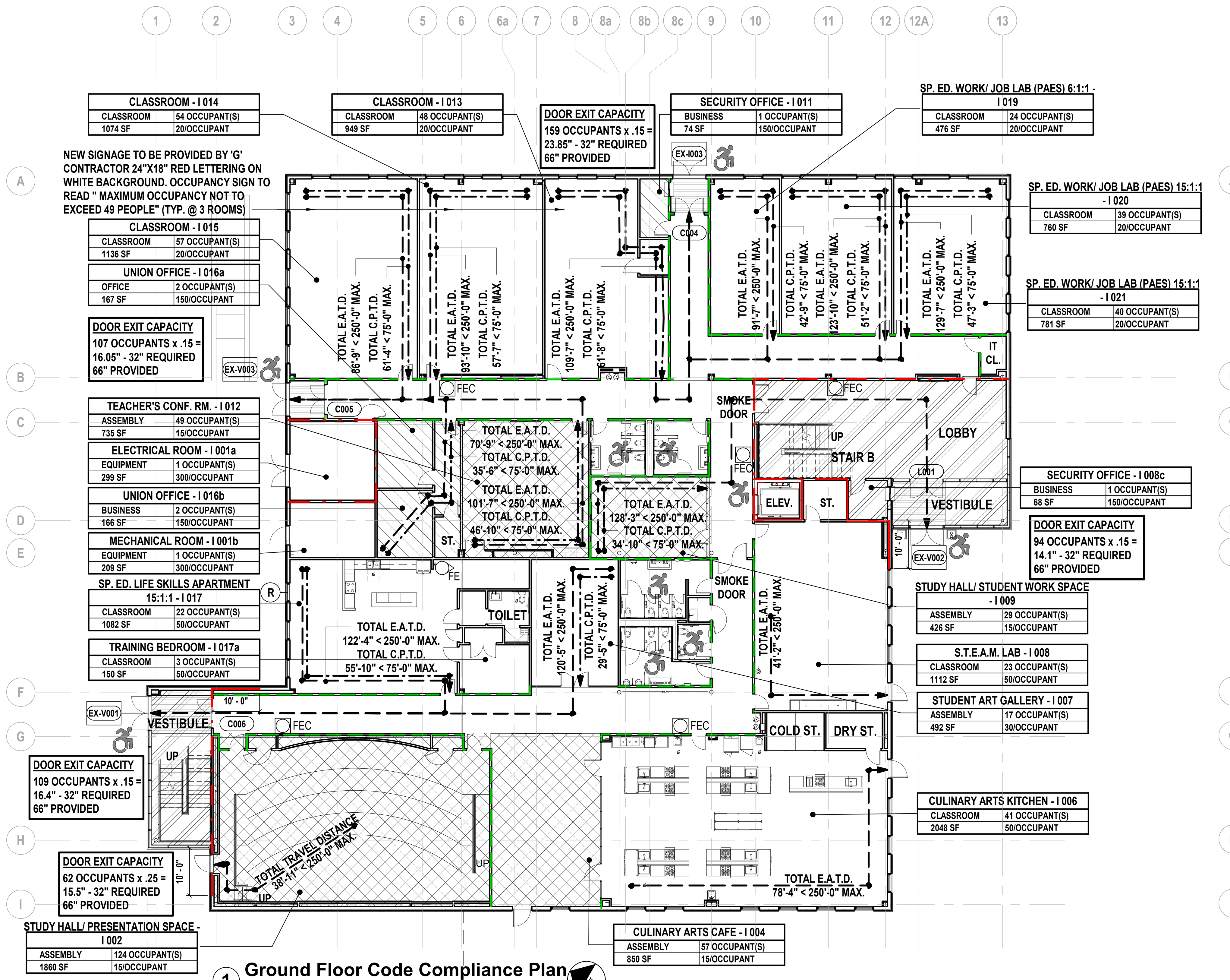

1 Ground Floor Code Compliance Plan

SCALE: 1/16" = 1'-0"

GROUND FLOOR	
GROSS AREA:	22,920 SF
NET FLOOR AREA:	15,314 SF
OCCUPANT LOAD:	541 PERSONS

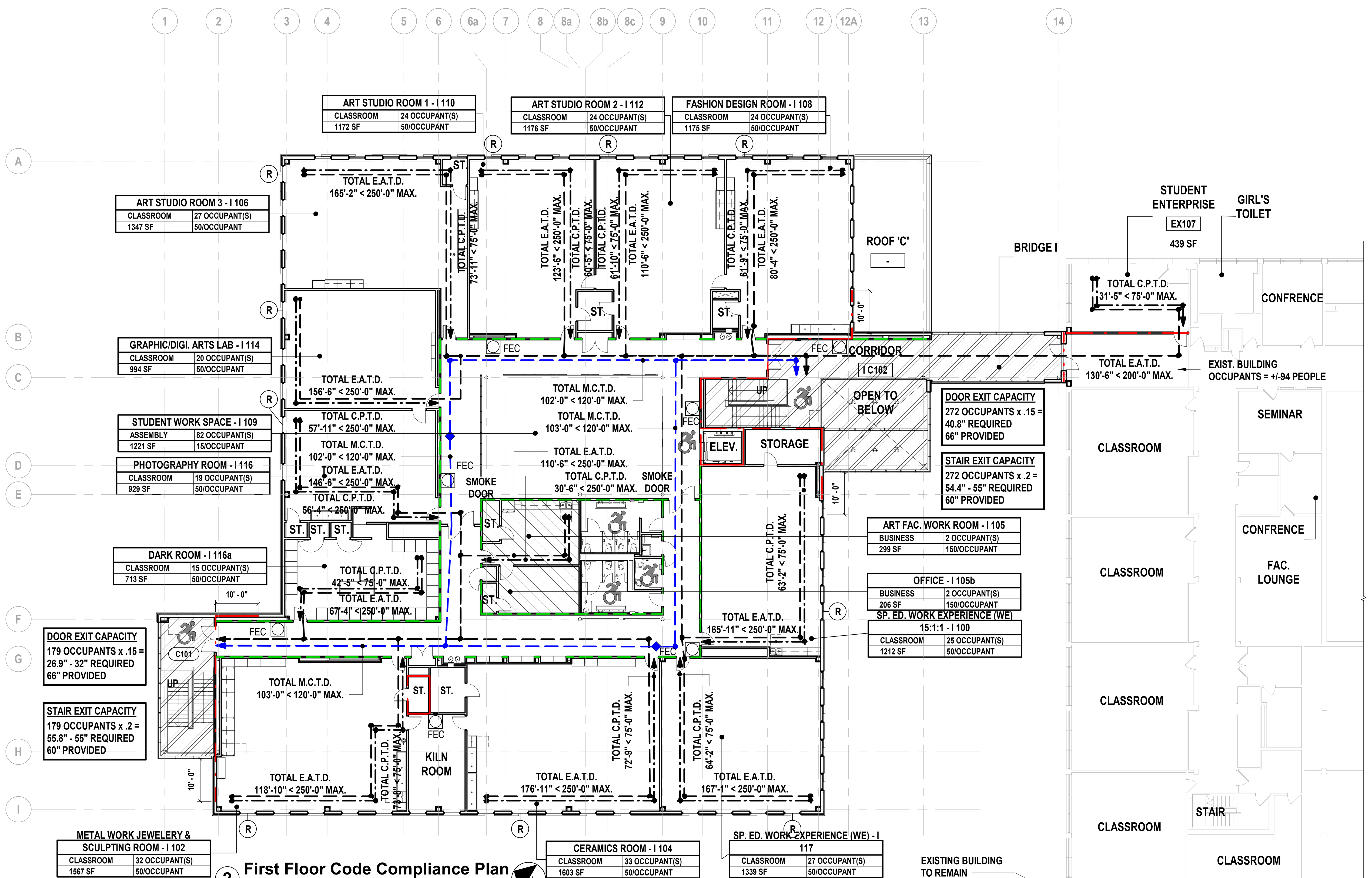

2 First Floor Code Compliance Plan

SCALE: 1/16" = 1'-0"

FIRST FLOOR	
GROSS AREA:	22,449 SF
NET FLOOR AREA:	14,994 SF
OCCUPANT LOAD:	356 PERSONS

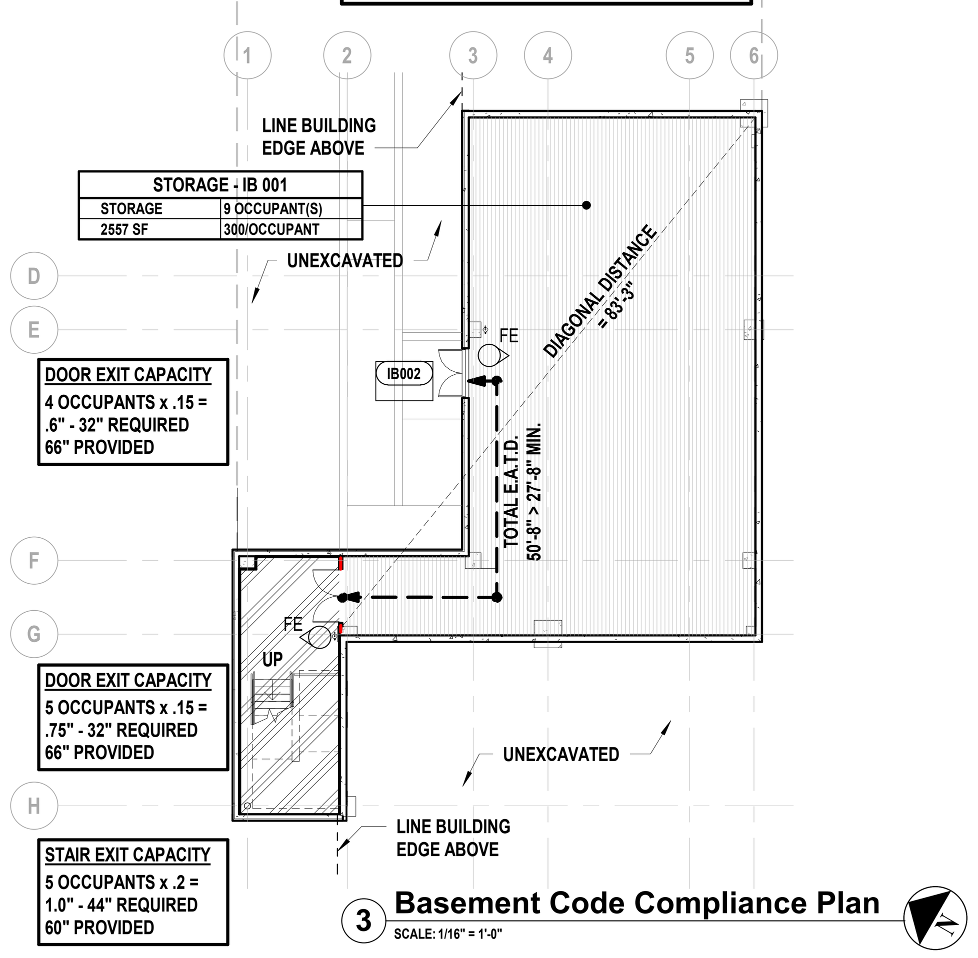

3 Basement Code Compliance Plan

SCALE: 1/16" = 1'-0"

BASEMENT	
GROSS AREA:	3,239 SF
NET FLOOR AREA:	2,557 SF
OCCUPANT LOAD:	9 PERSONS

STRUCTURAL DESIGN CRITERIA

DESIGN LOADS PER 2020 NYSBC CHAPTER 16 AND ASCE 7-16
STRUCTURAL OCCUPANCY (RISK) CATEGORY III

MINIMUM UNIFORM DISTRIBUTED LIVE LOADS PER 2020 BCNYS TABLE 1607.1

OCCUPANCY OR USE		UNIFORM (psf)
SCHOOLS	CLASSROOMS	40
	CORRIDOR ABOVE FIRST FLOOR	80
	FIRST FLOOR CORRIDOR	100
ASSEMBLY	FIXED SEATS	60
	LOBBIES	100
	MOVABLE SEATS	100
	STAGE FLOORS	150
	PLATFORMS	100
	OTHER ASSEMBLY AREAS	100
RECREATIONAL USES	GYMNASIUMS	100
	REVIEWING STANDS, GRANDSTANDS, BLEACHERS	100

SNOW LOADS	
GROUND SNOW LOAD	30
EXPOSURE FACTOR	1.0
THERMAL FACTOR	1.0
IMPORTANCE FACTOR	1.1
FLAT ROOF SNOW LOAD	23.1

WIND LOADS	
BASIC WIND SPEED	125 MPH
WIND EXPOSURE CATEGORY	B

SEISMIC CATEGORY	
SITE CLASS	D
SEISMIC RISK CATEGORY	III
SEISMIC DESIGN CATEGORY	B

ALLOWABLE SOIL BEARING CAPACITY = 2 TONS PER SF

FIRE PROTECTION AND LIFE SAFETY SYSTEMS

AN AUTOMATIC FIRE SPRINKLER SYSTEM SHALL BE PROVIDED PER 2020 BCNYS SECTION 903.2.3
1. GROUP E FIRE AREA IS GREATER THAN 12,000 SF
2. GROUP E FIRE AREA HAS AN OCCUPANT LOAD OF 300 OR MORE.

PORTABLE FIRE EXTINGUISHERS ARE REQUIRED PER 2020 BCNYS SECTION 906.1
1. IN GROUP E OCCUPANCIES
2. WITHIN 30 FEET OF COMMERCIAL COOKING EQUIPMENT
3. AREAS WHERE FLAMMABLE OR COMBUSTIBLE LIQUIDS ARE STORED
4. ON EACH FLOOR OF STRUCTURES UNDER CONSTRUCTION
5. WHERE REQUIRED BY THE 2020 FIRE CODE OF NEW YORK STATE SECTIONS TABLE 906.1

FIRE EXTINGUISHERS FOR CLASS-A FIRE HAZARDS - LIGHT (LOW) HAZARD OCCUPANCY PER 2020 BCNYS TABLE 906.3(2)

MINIMUM RATED SINGLE EXTINGUISHER:	2-A
FLOOR AREA PER UNIT OF A:	3,000 SF
FLOOR AREA FOR EXTINGUISHER:	11,250 SF
MAX. DISTANCE OF TRAVEL:	75 FEET

MANUAL FIRE ALARM SYSTEM PER TABLE 2020 BCNYS 906.3(2)
A MANUAL FIRE ALARM SYSTEM THAT INITIATES THE OCCUPANT NOTIFICATION SIGNAL UTILIZING AN EMERGENCY VOICE/ALARM COMMUNICATION SYSTEM MEETING THE REQUIREMENTS OF SECTION 907.5.2.2 AND INSTALLED IN ACCORDANCE WITH SECTION 907.6 SHALL BE INSTALLED IN GROUP E OCCUPANCIES. WHERE AUTOMATIC SPRINKLER SYSTEMS OR SMOKE DETECTORS ARE INSTALLED, SUCH SYSTEMS SHALL BE CONNECTED TO THE BUILDING FIRE ALARM SYSTEM.

LEGEND

1 HOUR MIN. FIRE RATED WALLS 45 MIN. FIRE RATED OPENING PROTECTIVE UL:U906 (BCNYS 708)	AREA OF BUSINESS (B) SPACES	AREA OF STORAGE (S-1) SPACES	
2 HOUR MIN. FIRE RATED WALLS 90 MIN. FIRE RATED OPENING PROTECTIVES UL:U408 (BCNYS 706)	AREA OF ASSEMBLY (A) SPACES		
SMOKE BARRIER WALL CONSTRUCTION (B.O.D.)	OCCUPANCY AREA (SF): 101 / OFFICE / 150 SF / 1 PERSON / 150SF/PERSON	ROOM NUMBER, # OF PERSONS, SQUARE FOOT/ PERSON	
EXIT ACCESS DOOR / EXIST DOOR	1 HOUR RATED EXIST ENCLOSURE	ADA PUBLIC ENTRANCE	
FEC RECESSED FIRE EXTINGUISHER	EXIT SIGN		
FE SURFACE MOUNTED FIRE EXTINGUISHER	PATH OF EGRESS	C.P.T.D. = (COMMON PATH OF TRAVEL DIST.)	
		E.A.T.D. = (EXIST ACCESS TRAVEL DIST.)	
		M.C.T.D.= (MAXIMUM CORRIDOR TRAVEL DIST.)	

PROPOSED OCCUPANT LOAD FOR PLUMBING FIXTURES PER STORY

GROUND FLOOR - CHILDREN	'E' OCCUPANCY :		
	VOCATIONAL CLASSROOMS	=	197 OCCUPANTS
	CLASSROOMS	=	356 OCCUPANTS
	'A' OCCUPANCY :		
	PRESENTATION, CAFE, GALLERY	=	247 OCCUPANTS
	TEACHER CONF. RM. 49/ STUDENT WK. 29	=	78 OCCUPANTS
GROUND FLOOR - ADULTS	'B' BUSINESS :		
	TEACH. SPACES, UNION OFFICE, ELEC. & MECH.	=	19 OCCUPANTS
	'S' STORAGE:		
	BASEMENT	=	9 OCCUPANTS
FIRST FLOOR - CHILDREN	'E' OCCUPANCY :		
	VOCATIONAL CLASSROOMS/ CLASSROOMS	=	270 OCCUPANTS
	'A' OCCUPANCY :		
	STUDENT WORK SPACE	=	82 OCCUPANTS
FIRST FLOOR - ADULTS:	'B' BUSINESS :		
	TEACHERS, OFFICES	=	15 OCCUPANTS

PLUMBING OCCUPANCY CODE CALCULATED ON PROPOSED ADDITION

TRAVEL DISTANCE

SPACES WITH ONE EXIT OR EXIT ACCESS DOORWAY PER 2020 BCNYS TABLE 1006.2

OCCUPANCY TYPE E, BUILDING EQUIPPED THROUGHOUT WITH AN AUTOMATIC SPRINKLER SYSTEM	MAXIMUM OCCUPANT LOAD OF SPACE = 49	MAXIMUM COMMON PATH OF EGRESS TRAVEL = 75'

EXIT ACCESS TRAVEL DISTANCE PER 2020 BCNYS TABLE 1017.2
BUILDING EQUIPPED THROUGHOUT WITH AN AUTOMATIC SPRINKLER SYSTEM = 250'

MAXIMUM CORRIDOR TRAVEL DISTANCE PER 2022 NYSED MPS
ANY POINT IN ANY GROUND FLOOR CORRIDOR MUST BE WITHIN 150' ALONG THE LINE OF TRAVEL TO AN EXTERIOR DOORWAY.
ANY POINT IN A CORRIDOR OTHER THAN A GROUND FLOOR CORRIDOR SHALL NOT EXCEED 120' ALONG THE LINE OF TRAVEL TO THE STAIR ENCLOSURE OF AN EXIT STAIRWAY.

BUILDING HEIGHTS, STORIES & AREA

ALLOWABLE BUILDING HEIGHT IN FEET ABOVE GRADE PLANE PER 2020 BCNYS TABLE 504.3

OCCUPANCY TYPE E, S BUILDING EQUIPPED THROUGHOUT WITH AN AUTOMATIC SPRINKLER SYSTEM	CONSTRUCTION CLASSIFICATION TYPE IIB	
	ALLOWED	PROPOSED
	75'-0"	+/- 34'-5"

ALLOWABLE NUMBER OF STORIES ABOVE GRADE PLANE PER 2020 BCNYS TABLE 504.4

OCCUPANCY TYPE E, S BUILDING EQUIPPED THROUGHOUT WITH AN AUTOMATIC SPRINKLER SYSTEM	CONSTRUCTION CLASSIFICATION TYPE IIB	
	ALLOWED	PROPOSED
	3 STORIES	2 STORIES

ALLOWABLE AREA FACTOR 2020 BCNYS TABLE 506.2

OCCUPANCY TYPE E, SM BUILDING EQUIPPED THROUGHOUT WITH AN AUTOMATIC SPRINKLER SYSTEM	CONSTRUCTION CLASSIFICATION TYPE IIB		
	ALLOWED PER FLOOR	ALLOWED	PROPOSED
	43,500 SF	87,000 SF	48,608 SF

BUILDING AREA FRONTAGE INCREASE PER 2020 NYSBC SECTION 506.2 NOT REQUIRED OR TABULATED

FIRE-RESISTANCE RATING REQ'S FOR BUILDING ELEMENTS (HOURS) PER 2020 BCNYS TABLE 601

(2020 BCNYS TABLE 601 & 602)

BUILDING ELEMENT		TYPE IIB
STRUCTURAL FRAME		0
BEARING WALLS	EXTERIOR	0
	INTERIOR	0
NON-BEARING WALLS AND PARTITIONS - EXTERIOR		0 - PER TABLE 602, FIRE SEPARATION DISTANCE GREATER THAN 30'
NON-BEARING WALLS AND PARTITIONS - INTERIOR		0
FLOOR CONSTRUCTION AND ASSOCIATED SECONDARY MEMBERS		0
ROOF CONSTRUCTION AND ASSOCIATED SECONDARY MEMBERS		0

PROPOSED BUILDING AREA

FIRST FLOOR BUILDING AREA	= 22,449 SQUARE FEET (S.F.)
GROUND FLOOR BUILDING AREA	= 22,920 SQUARE FEET (S.F.)
BASEMENT BUILDING AREA	= 3,239 SQUARE FEET (S.F.)
TOTAL BUILDING AREA	= 48,608 SQUARE FEET (S.F.)

PLUMBING FIXTURE REQUIREMENTS

(2020 PCNYS TABLE 403.1)

FIRST FLOOR ADULTS

SPACE		WATER CLOSETS				LAVATORIES			BATHTUBS/SHOWERS		DRINKING FOUNTAIN	
USE	LOAD	RATIO	MALE/ FEMALE			RATIO	MALE/ FEMALE		RATIO	REQ'D	RATIO	REQ'D
'B' OCCUPANCY	15 8 M. & 8 F.	1 PER 25 FOR THE FIRST 50	0.04			1 PER 40 FOR THE FIRST 80	0.04		N/A	-	1 PER 100	0.15
TOTAL REQUIRED			1				1			0		1
TOTAL PROVIDED			1				1			0		1

FIRST FLOOR STUDENTS

SPACE		WATER CLOSETS				LAVATORIES			BATHTUBS/SHOWERS		DRINKING FOUNTAIN	
USE	LOAD	RATIO	MALE	RATIO	FEMALE	RATIO	MALE	FEMALE	RATIO	REQ'D	RATIO	REQ'D
'E' OCCUPANCY	270 135 M. & 135 W.	1 PER 50	2.7	1 PER 50	2.7	1 PER 50	2.7	2.7	N/A	-	1 PER 100	2.7
TOTAL REQUIRED			3		3		3	3		0		3
TOTAL PROVIDED			4*		4		3	3		2		3

GROUND/ BASEMENT FLOOR ADULTS

SPACE		WATER CLOSETS				LAVATORIES			BATHTUBS/SHOWERS		DRINKING FOUNTAIN	
USE	LOAD	RATIO	MALE	RATIO	FEMALE	RATIO	MALE	FEMALE	RATIO	REQ'D	RATIO	REQ'D
'B' OCCUPANCY	19 10 M. & 10 F.	1 PER 25 FOR THE FIRST 50	0.4	1 PER 25 FOR THE FIRST 50	0.4	1 PER 40 FOR THE FIRST 80	0.25	0.25	N/A	-	1 PER 100	0.1
STORAGE 'S'	9 5 M. & 5 F.	1 PER 100	0.05	1 PER 100	0.05	1 PER 100	0.01	0.01	N/A	-	1 PER 1,000	0.001
SUB-TOTAL	28		.45		.45		.26	.26		0		.101
TOTAL REQUIRED			1		1		1	1		0		1
TOTAL PROVIDED			3		3		2	2		0		2

GROUND FLOOR STUDENTS

SPACE		WATER CLOSETS				LAVATORIES			BATHTUBS/SHOWERS		DRINKING FOUNTAIN	
USE	LOAD	RATIO	MALE	RATIO	FEMALE	RATIO	MALE	FEMALE	RATIO	REQ'D	RATIO	REQ'D
'E' OCCUPANCY	197 99 M. & 99 W.	1 PER 50	1.98	1 PER 50	1.98	1 PER 50	1.98	1.98	N/A	-	1 PER 100	1.98
TOTAL REQUIRED			2		2		2	2		0		2
TOTAL PROVIDED			5		5		4	4		2		2

GROUND FLOOR ASSEMBLY

SPACE		WATER CLOSETS				LAVATORIES			BATHTUBS/SHOWERS		DRINKING FOUNTAIN	
USE	LOAD	RATIO	MALE	RATIO	FEMALE	RATIO	MALE	FEMALE	RATIO	REQ'D	RATIO	REQ'D
'A' OCCUPANCY	260 130 M. & 130 W.	1 PER 125	1.04	1 PER 125	1.04	1 PER 65	2	2	N/A	-	1 PER 500	0.52
TOTAL REQUIRED			2		2		2	2		0		1
TOTAL PROVIDED			5		5		4	4		2 (5)		2

* = (1) URINAL COUNTED AS TOILET

MAXIMUM FLOOR AREA ALLOWANCE PER 2020 BCNYS TABLE 1004.5

FUNCTION OF SPACE:		FLOOR AREA (SF) PER OCCUPANT
ACCESSORY STORAGE AREAS, MECHANICAL & EQUIPMENT ROOMS		300 GROSS
ASSEMBLY	UNCONCENTRATED, TABLES & CHAIRS	15 NET
BUSINESS		150 GROSS
EDUCATIONAL	CLASSROOM AREA	20 NET
	SHOPS & OTHER VOCATIONAL ROOM AREAS	50 NET

MINIMUM NUMBER OF EXITS PER OCCUPIED SPACE

(2020 BCNYS TABLE 1006.2.1)

	RM. #	ROOM NAME	# OF OCCUPANTS	REQ'D # OF EXITS	# OF EXITS PROVIDED
BASEMENT	IB 001	STORAGE	9	2	2
GROUND FLOOR	I 001a	ELECTRICAL ROOM	1	1	1
	I 001b	MECHANICAL ROOM	1	1	1
	I 002	PRESENTATION ROOM	124	2	3
	I 004	CULINARY ARTS CAFE	57	1	1
	I 006	CULINARY ARTS KITCHEN	41	1	3
	I 007	ART GALLERY	17	1	1
	I 008	S.T.E.A.M. INNOVATION LAB	23	1	2
	I 008c	SECURITY OFFICE	1	1	1
	I 009	STUDY HALL/ STUDENT W.S.	29	1	1
	I 011	SECURITY OFFICE	1	1	1
	I 012	TEACHER'S CONFERENCE ROOM	49	1	1
	I 013	CLASSROOM	49 max.	1	1
	I 014	CLASSROOM	49 max.	1	1
	I 015	CLASSROOM	49 max.	1	1
	I 016a	UNION OFFICE	2	1	1
	I 016b	UNION OFFICE	2	1	1
	I 017	SPECIAL ED. LIFE SKILLS APART.	25	1	1
	I 019	SP. ED. WORK/ JOB LAB (PAES)	24	1	1
	I 020	SP. ED. WORK/ JOB LAB (PAES)	39	1	1
	I 021	SP. ED. WORK/ JOB LAB (PAES)	40	1	1
FIRST FLOOR	I 100	S.T.E.A.M. INNOVATION LAB 2	25	1	1
	I 102	METAL WORK ROOM	32	1	1
	I 104	CERAMICS ROOM	33	1	1
	I 105	ART FACULTY WORK ROOM	2	1	1
	I 105b	OFFICE	2	1	1
	I 106	ART STUDIO ROOM 3	27	1	1
	I 108	FASHION DESIGN ROOM	24	1	1
	I 109	STUDENT WORK SPACE	82	1	2
	I 110	ART STUDIO ROOM 1	24	1	1
	I 112	ART STUDIO ROOM 2	24	1	1
	I 114	GRAPHIC/ DIGITAL ARTS LAB	20	1	1
	I 116	PHOTOGRAPHY ROOM	19	1	2
	I 116a	DARK ROOM	15	1	2
	I 117	CTE INFORMATION LAB	27	1	1

MINIMUM NUMBER OF EXITS OR ACCESS TO EXITS PER STORY PER 2020 BCNYS TABLE 1006.3.2

OCCUPANT LOAD PER STORY			MIN. NUMBER OF EXITS OR ACCESS TO EXITS FROM STORY	
		PROPOSED OCCUPANTS	REQUIRED	PROPOSED
FIRST FLOOR	1-500	356	2	3
GROUND FLOOR	501-1000	541	3	9
BASEMENT	1-500	9	2	2

H2M architects + engineers
538 Broad Hollow Road, 4th Floor East
Melville, NY 11747
631.756.8000 • www.h2m.com
Architecture & Landscape Architecture: No Certificate Required
Engineering Certificate of Authorization No.: 0018178

CONSULTANTS:

MARK	DATE	DESCRIPTION
1	08-23-2024	SED ADDENDUM 1
2	01-10-2025	SED ADDENDUM 2

REGISTERED ARCHITECT KEVIN MICHAEL MEDLER STATE OF NEW YORK 038379
KEVIN M. MEDLER, R.A.
NY PROFESSIONAL ARCHITECT Lic. No. 038379
07/31/2024 Exp. Date

"ALTERATION OF THIS DOCUMENT EXCEPT BY A LICENSED PROFESSIONAL IS ILLEGAL"

DESIGNED BY:	DRAWN BY:	CHECKED BY:	REVIEWED BY:
CWP	DOD/NPO	CWP/KMM	

PROJECT No:	DATE:	SCALE:
WPSD 2203	MARCH 2025	AS SHOWN

CLIENT
WHITE PLAINS CITY SCHOOL DISTRICT

ADDITION AT WHITE PLAINS HIGH SCHOOL

550 NORTH STREET, WHITE PLAINS, NY 10605

66-22-00-01-0-016-030

CONTRACT
ALL CONTRACTS

STATUS
FINAL BID SET

SHEET TITLE
NEW YORK STATE CODE ANALYSIS - GROUND FLOOR AND FIRST FLOOR EGRESS PLANS, ANALYSIS TABLES, AND NOTES

DRAWING No.
G 111.00

C:\Users\ddesouza\Documents\WPSD2203_Central21_A_DDeSouzaD8TU8.rvt
3/21/2025 9:27:49 AM

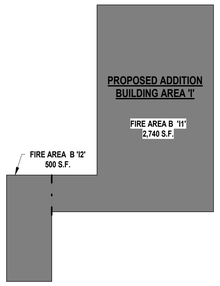

1 **Building 'I' Fire Area Basement Plan**
SCALE: 1" = 20'-0"

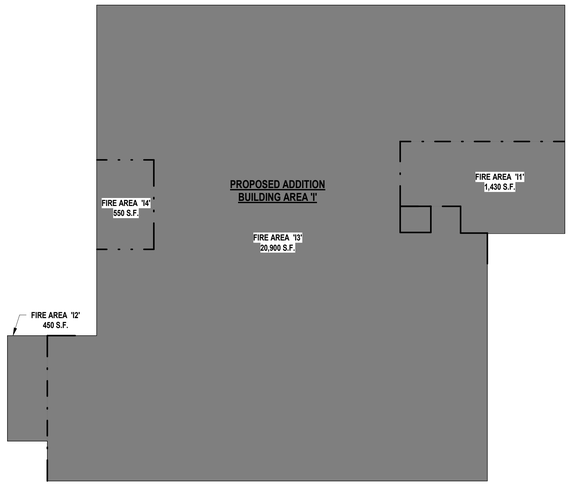

2 **Building 'I' Fire Area Ground Floor Plan**
SCALE: 1" = 20'-0"

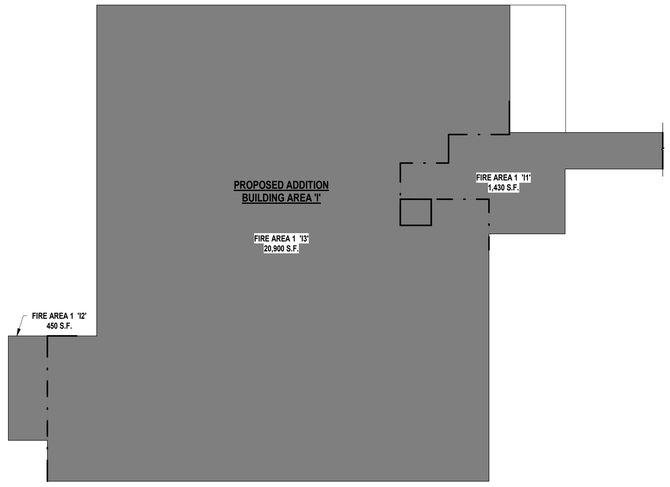

3 **Building 'I' Fire Area First Floor Plan**
SCALE: 1" = 20'-0"

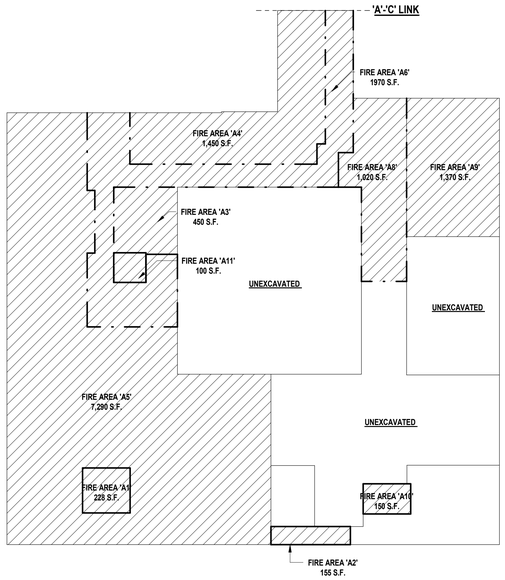

4 **Building 'A' Fire Area Ground Floor Plan**
SCALE: 1" = 20'-0"

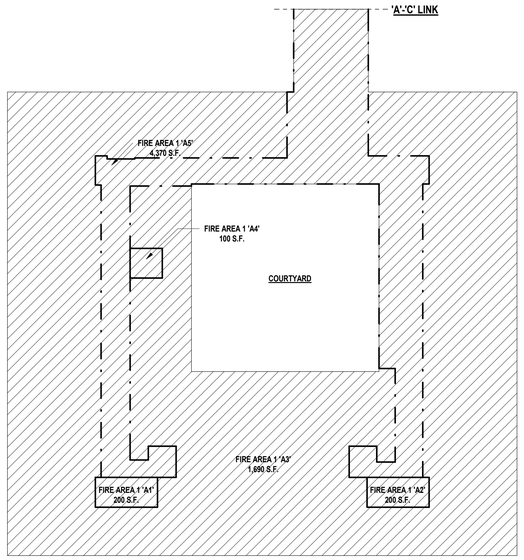

5 **Building 'A' Fire Area First Floor Plan**
SCALE: 1" = 20'-0"

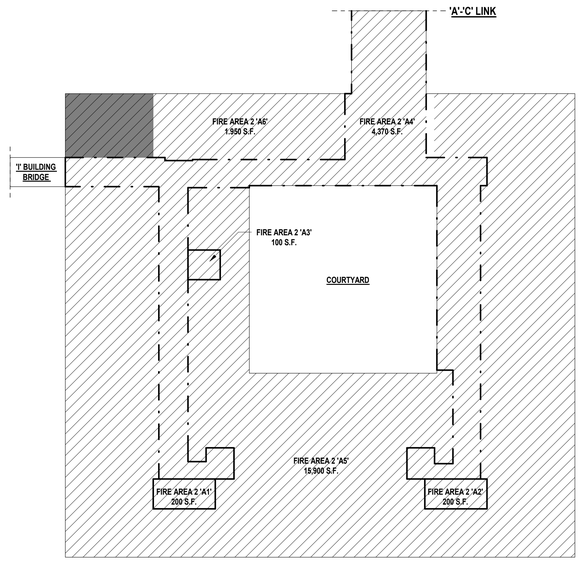

6 **Building 'A' Fire Area Second Floor Plan**
SCALE: 1" = 20'-0"

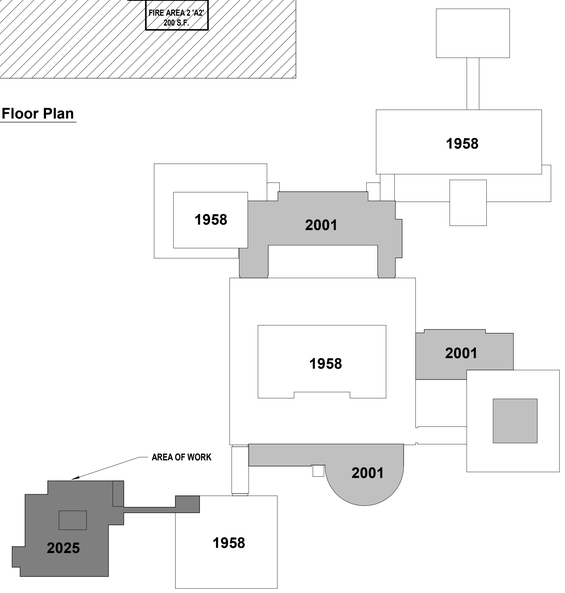

ALLOWABLE BUILDING AREA

TYPE	GROUP	ALLOWABLE (Aa)	REFERENCE
IIB	E	58,000 (SI)	2020 NYSBC TABLE 506.2

AREA SUMMARY

BUILDING 'A'	EXISTING 1958 BUILDING	56,000 S.F.
BUILDING 'B'	EXISTING 1958 BUILDING / 2001 ADDITION	63,905 S.F.
BUILDING 'C'	EXISTING 1958 BUILDING / 2001 ADDITION	112,000 S.F.
BUILDING 'D'	EXISTING 1958 BUILDING	21,570 S.F.
BUILDING 'E'	EXISTING 1958 BUILDING	36,780 S.F.
BUILDING 'F'	EXISTING 1958 BUILDING	12,100 S.F.
BUILDING 'G'	EXISTING 1958 BUILDING / 2001 ADDITION	49,920 S.F.
BUILDING 'I'	PROPOSED BUILDING ADDITION	46,608 S.F.

FIRE AREA SYMBOL LEGEND

SYMBOL	DESCRIPTION
	INDICATES AREA OF EXISTING BUILDING (1968)
	INDICATES AREA OF EXISTING BUILDING ADDITIONS (2001)
	INDICATES AREA OF PROPOSED BUILDING ADDITIONS (2025)
— · —	INDICATES AREA OF EXISTING FIRE RATED PARTITION

H2M architects + engineers
538 Broad Hollow Road, 4th Floor East
Melville, NY 11747
631.756.8000 • www.h2m.com
Architecture & Landscape Architecture: No Certificate Required
Engineering Certificate of Authorization No.: 0018178

CONSULTANTS:

MARK	DATE	DESCRIPTION

REGISTERED ARCHITECT KEVIN MICHAEL MEDLER 038379 STATE OF NEW YORK

KEVIN M. MEDLER, R.A.
NY PROFESSIONAL ARCHITECT Lic. No. 038379

ST010924
Exp. Date

THE TRANSFERABILITY AND ACCURACY OF THIS DOCUMENT EXPIRES 90 CALENDAR DAYS FROM ORIGINAL IN ELECTRONIC FORMAT.

DESIGNED BY:	DRAWN BY:	CHECKED BY:	REVIEWED BY:
CWP	DOD/NPO	Checker	
PROJECT No: WPSD 2203	DATE: MARCH 2025	SCALE: AS SHOWN	

CLIENT

WHITE PLAINS CITY SCHOOL DISTRICT

ADDITION AT WHITE PLAINS HIGH SCHOOL

White Plains Public Schools WP REAL LIFE LEARNING

550 NORTH STREET, WHITE PLAINS, NY 10605

66-22-00-01-0-016-030

CONTRACT

ALL CONTRACTS

STATUS

FINAL BID SET

SHEET TITLE

CODE ANALYSIS FIRE AREA BUILDING 'A', BUILDING 'I'

DRAWING No.

G 112.00

C:\Users\desauzo\Documents\WPSD2203_CentralZ1_A_DDoSauzoDRTL8.rvt
3/6/2025 2:53:13 PM

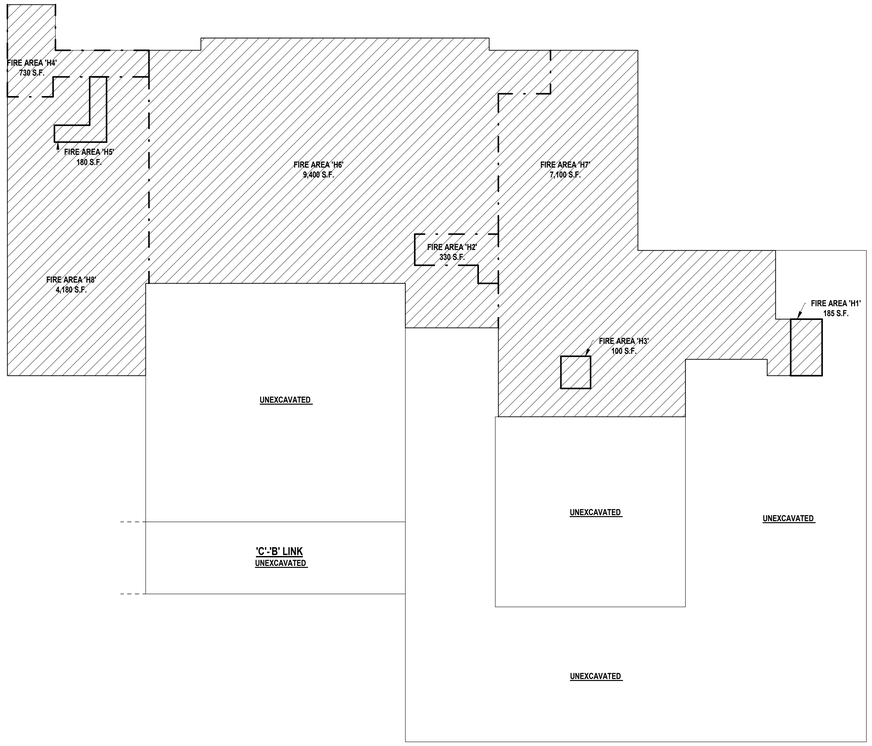

1 **Building 'B' Fire Area Ground Floor Plan**
SCALE: 1" = 20'-0"

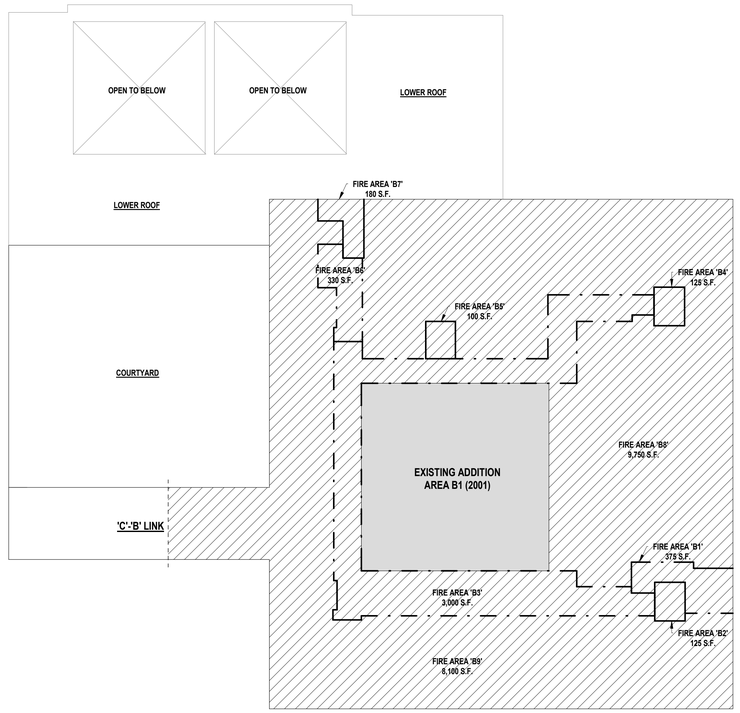

2 **Building 'B' Fire Area First Floor Plan**
SCALE: 1" = 20'-0"

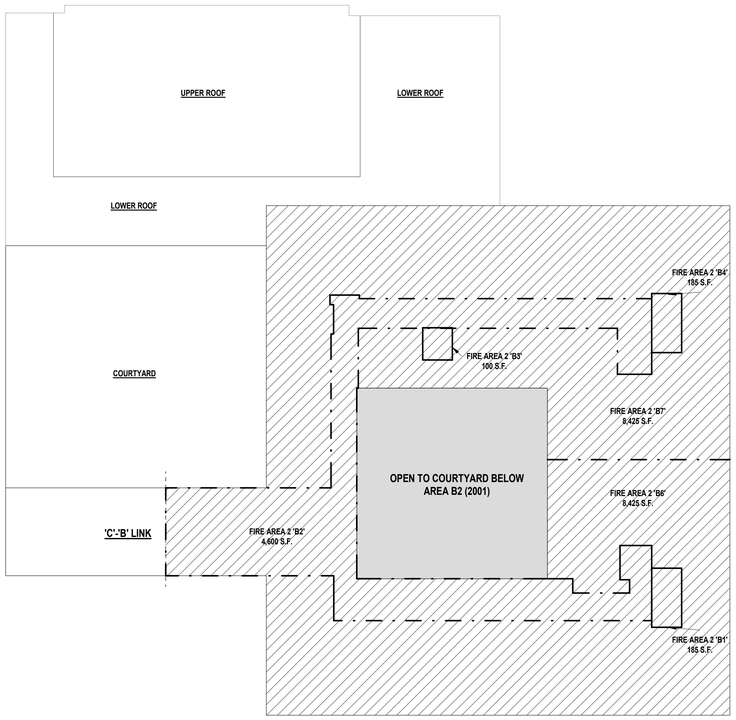

3 **Building 'B' Fire Area Second Floor Plan**
SCALE: 1" = 20'-0"

AREA SUMMARY

BUILDING 'A'	EXISTING 1958 BUILDING	56,000 S.F.
BUILDING 'B'	EXISTING 1958 BUILDING / 2001 ADDITION	63,905 S.F.
BUILDING 'C'	EXISTING 1958 BUILDING / 2001 ADDITION	112,000 S.F.
BUILDING 'D'	EXISTING 1958 BUILDING	21,570 S.F.
BUILDING 'E'	EXISTING 1958 BUILDING	36,780 S.F.
BUILDING 'F'	EXISTING 1958 BUILDING	12,100 S.F.
BUILDING 'G'	EXISTING 1958 BUILDING / 2001 ADDITION	49,920 S.F.
BUILDING 'I'	PROPOSED BUILDING ADDITION	46,608 S.F.

FIRE AREA SYMBOL LEGEND

SYMBOL	DESCRIPTION
	INDICATES AREA OF EXISTING BUILDING (1968)
	INDICATES AREA OF EXISTING BUILDING ADDITIONS (2001)
	INDICATES AREA OF PROPOSED BUILDING ADDITIONS (2025)
	INDICATES AREA OF EXISTING FIRE RATED PARTITION

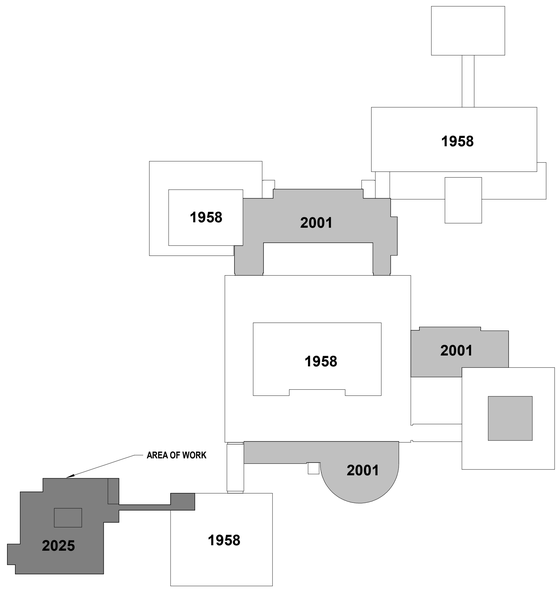

H2M architects + engineers
538 Broad Hollow Road, 4th Floor East
Melville, NY 11747
631.756.8000 • www.h2m.com
Architecture & Landscape Architecture: No Certificate Required
Engineering Certificate of Authorization No.: 0018178

CONSULTANTS:

MARK	DATE	DESCRIPTION

REGISTERED ARCHITECT
KEVIN MICHAEL MEDLER
038379
STATE OF NEW YORK

07/01/2024
Exp. Date

KEVIN M. MEDLER, R.A.
NY PROFESSIONAL ARCHITECT Lic. No. 038379
"No TRANSFERS OF THIS DOCUMENT EXCEPT BY A LICENSED PROFESSIONAL IN CHARGE."

DESIGNED BY:	DRAWN BY:	CHECKED BY:	REVIEWED BY:
CWP	DOD/NPO	Checker	
PROJECT No:	DATE:	SCALE:	
WPSD 2203	MARCH 2025	AS SHOWN	

CLIENT
WHITE PLAINS CITY SCHOOL DISTRICT

ADDITION AT WHITE PLAINS HIGH SCHOOL

White Plains Public Schools
WP
REAL LIFE LEARNING

550 NORTH STREET, WHITE PLAINS, NY 10605

66-22-00-01-0-016-030

CONTRACT
ALL CONTRACTS

STATUS
FINAL BID SET

SHEET TITLE
CODE ANALYSIS FIRE AREA BUILDING 'B'

DRAWING No.
G 113.00

C:\Users\ddesouza\Documents\WPSD2203_Central21_A_DDeSouzaD8TU8.rvt
3/6/2025 2:53:15 PM

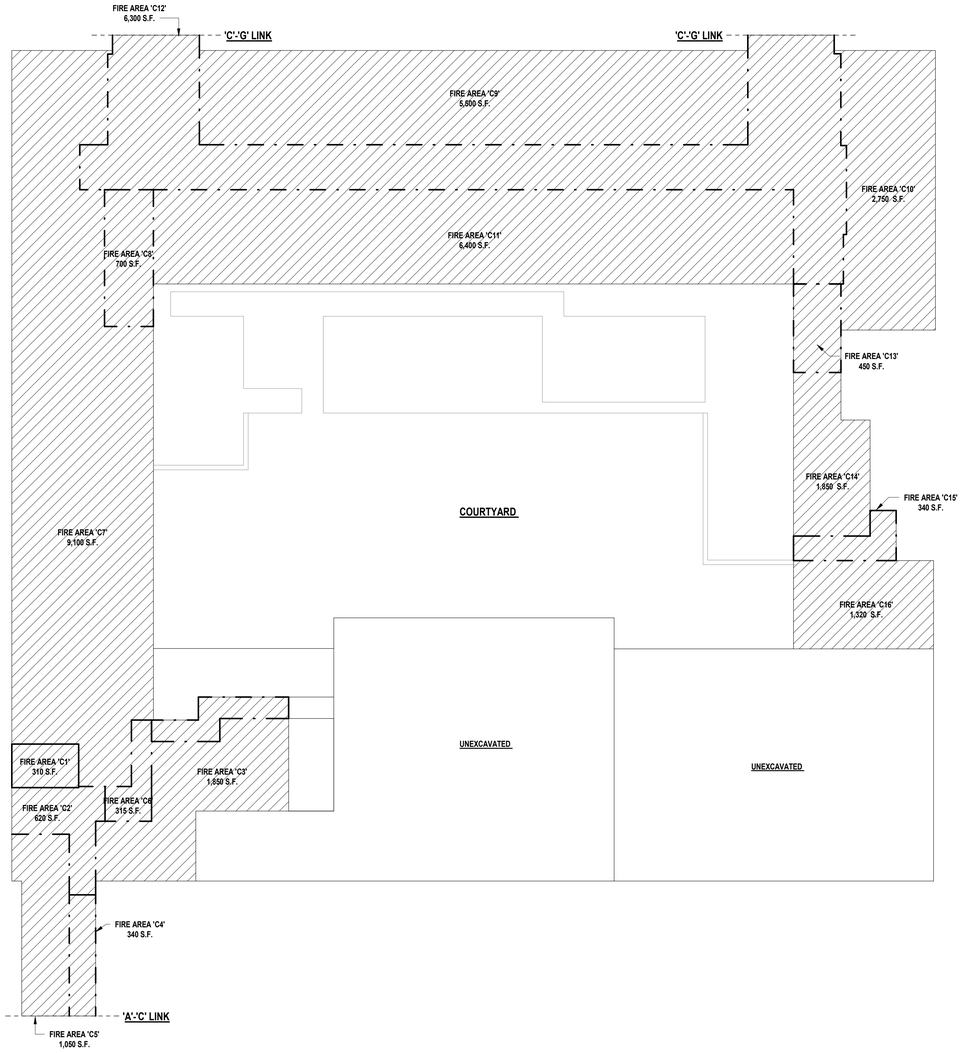

1 **Building 'C' Fire Area Ground Floor Plan**
SCALE: 1" = 20'-0"

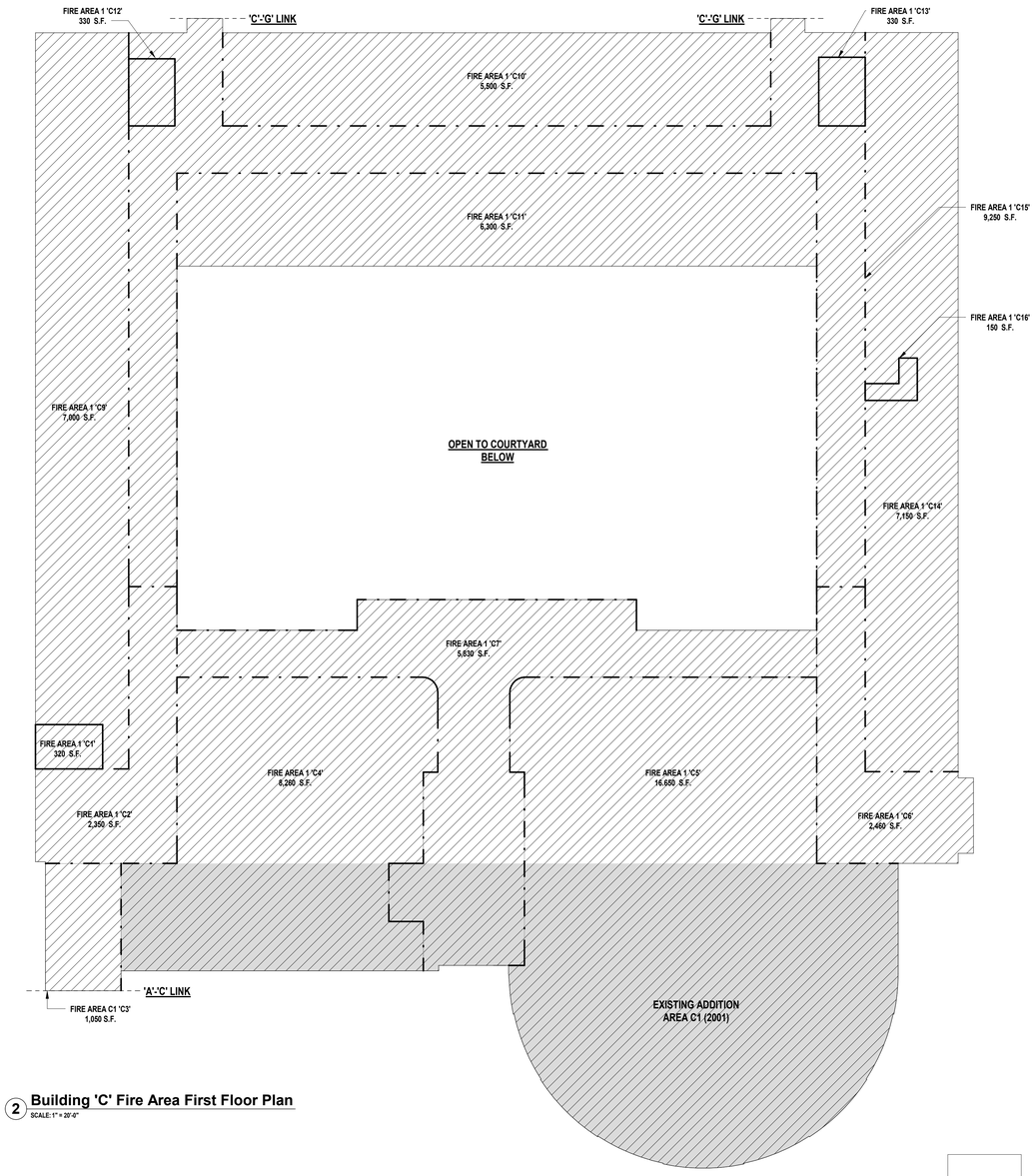

2 **Building 'C' Fire Area First Floor Plan**
SCALE: 1" = 20'-0"

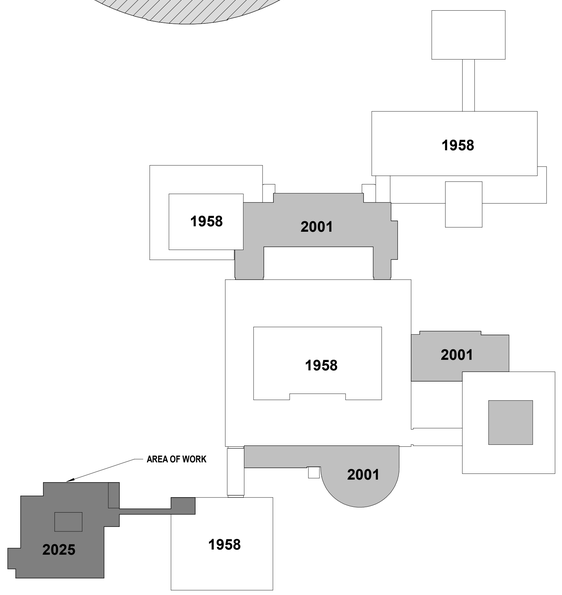

AREA SUMMARY

BUILDING 'A'	EXISTING 1958 BUILDING	56,000 S.F.
BUILDING 'B'	EXISTING 1958 BUILDING / 2001 ADDITION	63,905 S.F.
BUILDING 'C'	EXISTING 1958 BUILDING / 2001 ADDITION	112,000 S.F.
BUILDING 'D'	EXISTING 1958 BUILDING	21,570 S.F.
BUILDING 'E'	EXISTING 1958 BUILDING	36,780 S.F.
BUILDING 'F'	EXISTING 1958 BUILDING	12,100 S.F.
BUILDING 'G'	EXISTING 1958 BUILDING / 2001 ADDITION	49,920 S.F.
BUILDING 'I'	PROPOSED BUILDING ADDITION	46,608 S.F.

FIRE AREA SYMBOL LEGEND

SYMBOL	DESCRIPTION
	INDICATES AREA OF EXISTING BUILDING (1968)
	INDICATES AREA OF EXISTING BUILDING ADDITIONS (2001)
	INDICATES AREA OF PROPOSED BUILDING ADDITIONS (2025)
— · —	INDICATES AREA OF EXISTING FIRE RATED PARTITION

H2M architects + engineers
538 Broad Hollow Road, 4th Floor East
Melville, NY 11747
631.756.8000 • www.h2m.com
Architecture & Landscape Architecture: No Certificate Required
Engineering Certificate of Authorization No.: 0018178

CONSULTANTS:

MARK	DATE	DESCRIPTION

REGISTERED ARCHITECT
KEVIN MICHAEL MEDLER
038379
STATE OF NEW YORK

KEVIN M. MEDLER, R.A.
NY PROFESSIONAL ARCHITECT Lic. No. 038379
"IN TRANSITION OF THIS DOCUMENT SHALL BE A LICENSED PROFESSIONAL IN CHARGE."
07/01/2024
Exp. Date

DESIGNED BY:	DRAWN BY:	CHECKED BY:	REVIEWED BY:
CWP	DOD/NPO	Checker	
PROJECT No:	DATE:	SCALE:	
WPSD 2203	MARCH 2025	AS SHOWN	

CLIENT
WHITE PLAINS CITY SCHOOL DISTRICT

ADDITION AT WHITE PLAINS HIGH SCHOOL

White Plains Public Schools
WP
REAL LIFE LEARNING

550 NORTH STREET, WHITE PLAINS, NY 10605

66-22-00-01-0-016-030

CONTRACT
ALL CONTRACTS

STATUS
FINAL BID SET

SHEET TITLE
CODE ANALYSIS FIRE AREA BUILDING 'C'

DRAWING No.
G 114.00

C:\Users\ddesouza\Documents\WPSD2203_Central21_A_DDeSouza\D8TU8.rvt
3/6/2025 2:53:17 PM

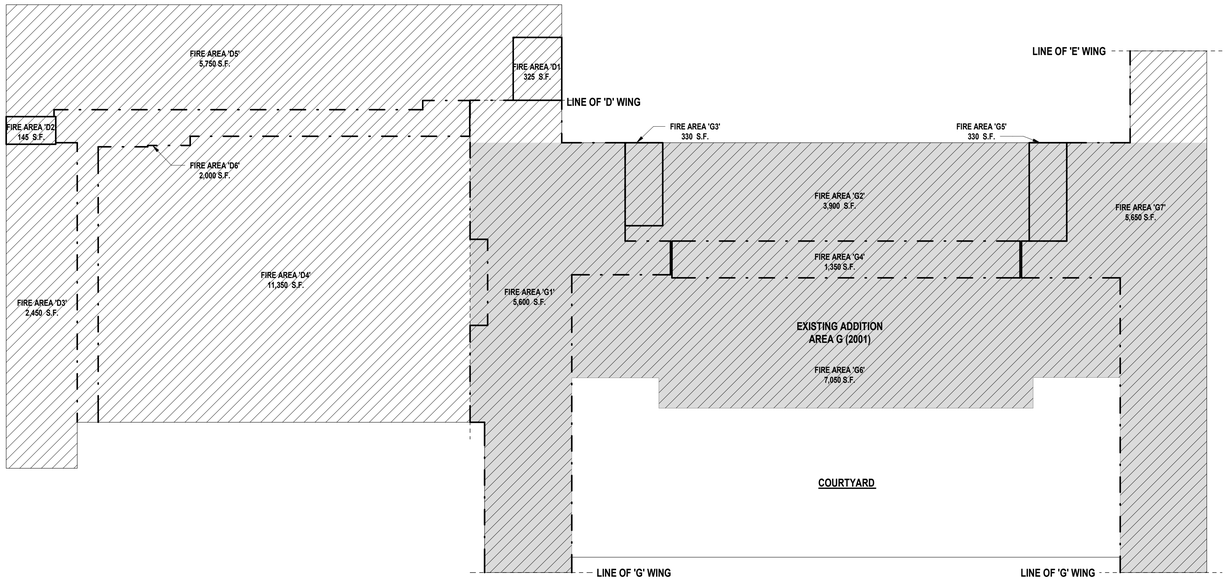

1 **Building 'D', Building 'G' Fire Area Ground Floor Plan**
SCALE: 1" = 20'-0"

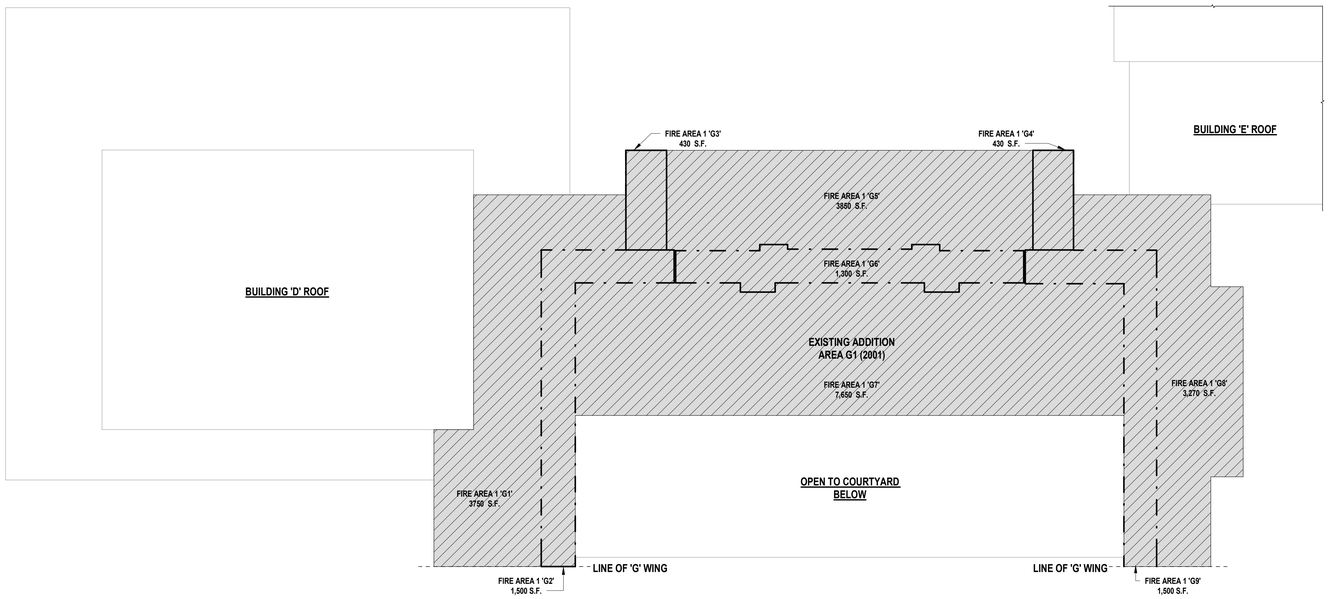

2 **Building 'G' Fire Area First Floor Plan**
SCALE: 1" = 20'-0"

AREA SUMMARY

BUILDING 'A'	EXISTING 1958 BUILDING	56,000 S.F.
BUILDING 'B'	EXISTING 1958 BUILDING / 2001 ADDITION	63,905 S.F.
BUILDING 'C'	EXISTING 1958 BUILDING / 2001 ADDITION	112,000 S.F.
BUILDING 'D'	EXISTING 1958 BUILDING	21,570 S.F.
BUILDING 'E'	EXISTING 1958 BUILDING	36,780 S.F.
BUILDING 'F'	EXISTING 1958 BUILDING	12,100 S.F.
BUILDING 'G'	EXISTING 1958 BUILDING / 2001 ADDITION	49,920 S.F.
BUILDING 'I'	PROPOSED BUILDING ADDITION	46,608 S.F.

FIRE AREA SYMBOL LEGEND

SYMBOL	DESCRIPTION
	INDICATES AREA OF EXISTING BUILDING (1968)
	INDICATES AREA OF EXISTING BUILDING ADDITIONS (2001)
	INDICATES AREA OF PROPOSED BUILDING ADDITIONS (2025)
— · —	INDICATES AREA OF EXISTING FIRE RATED PARTITION

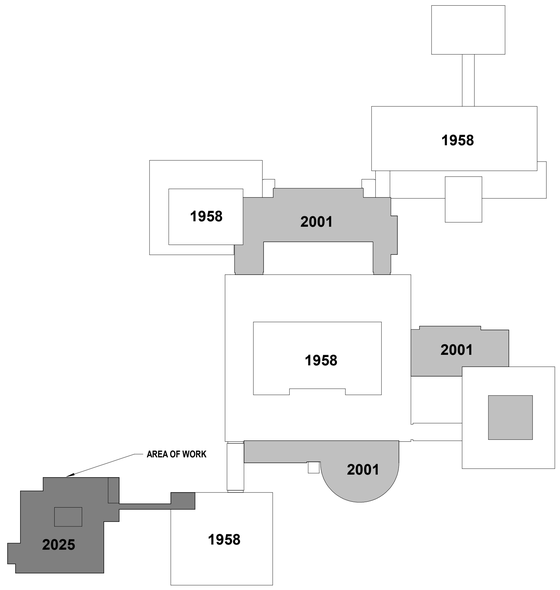

H2M architects + engineers
538 Broad Hollow Road, 4th Floor East
Melville, NY 11747
631.756.8000 • www.h2m.com
Architecture & Landscape Architecture: No Certificate Required
Engineering Certificate of Authorization No.: 0018178

CONSULTANTS:

MARK	DATE	DESCRIPTION

REGISTERED ARCHITECT KEVIN MICHAEL MEDLER 038379 STATE OF NEW YORK

ST013924 Exp. Date

KEVIN M. MEDLER, R.A.
NY PROFESSIONAL ARCHITECT Lic. No. 038379
"ALTERATION OF THIS DOCUMENT EXCEPT BY A LICENSED PROFESSIONAL IS ILLEGAL"

DESIGNED BY:	DRAWN BY:	CHECKED BY:	REVIEWED BY:
CWP	DOD/NPO	Checker	
PROJECT No: WPSD 2203	DATE: MARCH 2025	SCALE: AS SHOWN	

CLIENT
WHITE PLAINS CITY SCHOOL DISTRICT

ADDITION AT WHITE PLAINS HIGH SCHOOL

White Plains Public Schools WP REAL LIFE LEARNING

550 NORTH STREET, WHITE PLAINS, NY 10605

66-22-00-01-0-016-030

CONTRACT
ALL CONTRACTS

STATUS
FINAL BID SET

SHEET TITLE
CODE ANALYSIS FIRE AREA BUILDING 'D', BUILDING 'G'

DRAWING No.
G 115.00

C:\Users\ddesouza\Documents\WPSD2203_Central21_A_DDeSouza3ftTLB.rvt

3/6/2025 2:53:18 PM

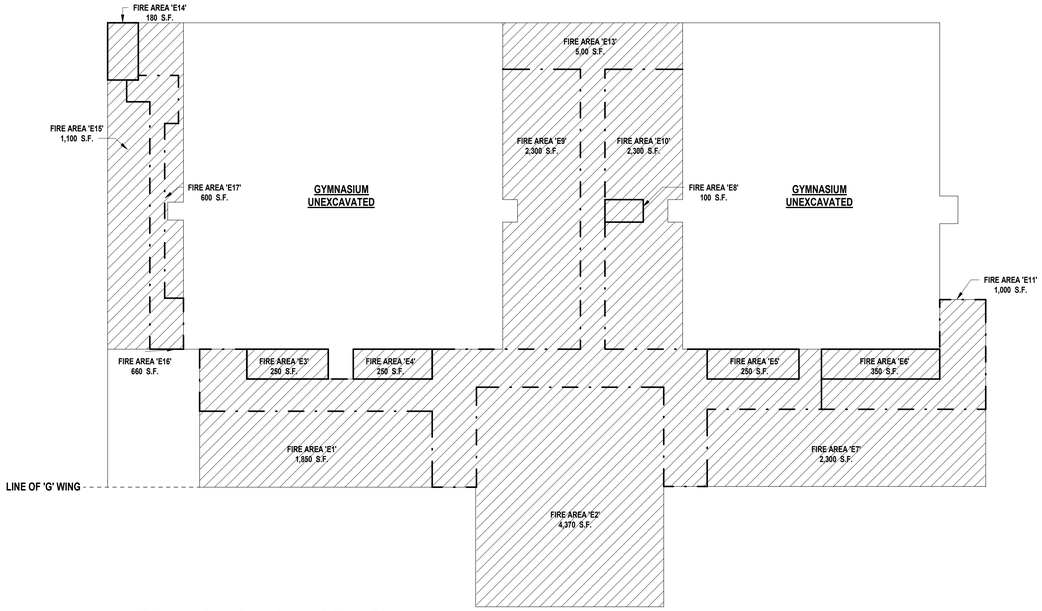

1 **Building 'E' Fire Area Ground Floor Plan**
SCALE: 1" = 20'-0"

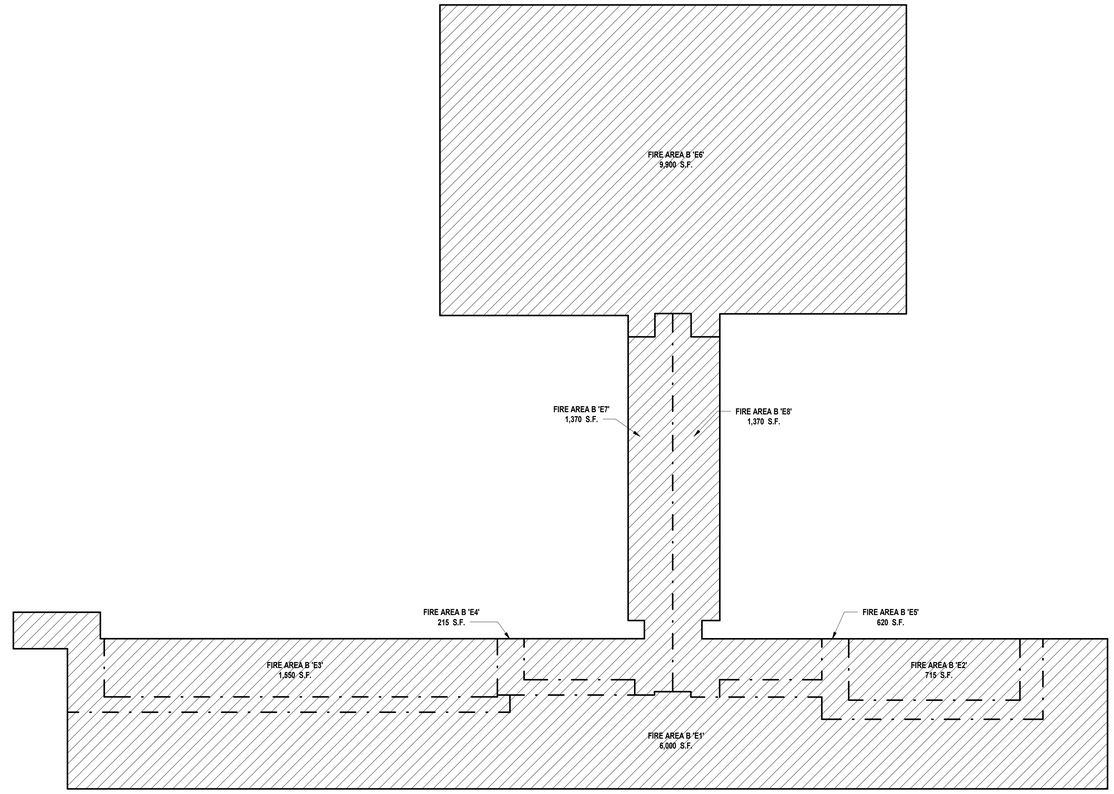

3 **Building 'E' & 'F' Fire Area Basement**
SCALE: 1/16" = 1'-0"

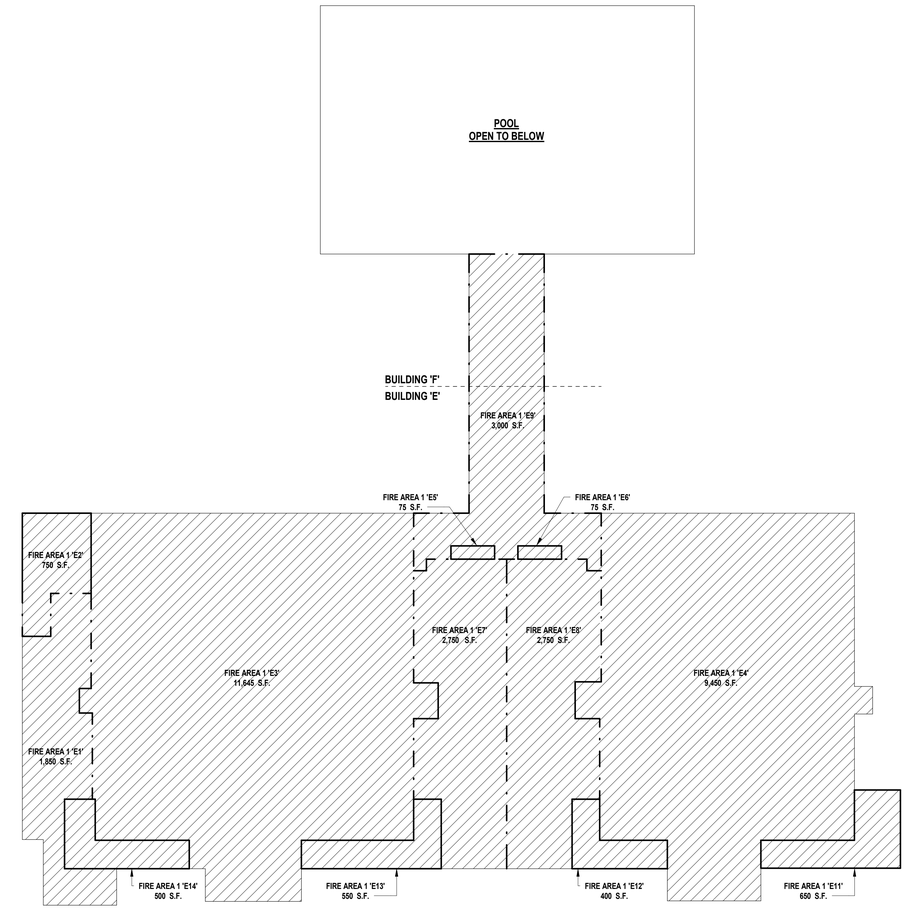

2 **Building 'E' & 'F' Fire Area Gym & Pool**
SCALE: 1" = 20'-0"

AREA SUMMARY

BUILDING 'A'	EXISTING 1958 BUILDING	56,000 S.F.
BUILDING 'B'	EXISTING 1958 BUILDING / 2001 ADDITION	63,905 S.F.
BUILDING 'C'	EXISTING 1958 BUILDING / 2001 ADDITION	112,000 S.F.
BUILDING 'D'	EXISTING 1958 BUILDING	21,570 S.F.
BUILDING 'E'	EXISTING 1958 BUILDING	36,780 S.F.
BUILDING 'F'	EXISTING 1958 BUILDING	12,100 S.F.
BUILDING 'G'	EXISTING 1958 BUILDING / 2001 ADDITION	49,920 S.F.
BUILDING 'I'	PROPOSED BUILDING ADDITION	46,608 S.F.

FIRE AREA SYMBOL LEGEND

SYMBOL	DESCRIPTION
	INDICATES AREA OF EXISTING BUILDING (1968)
	INDICATES AREA OF EXISTING BUILDING ADDITIONS (2001)
	INDICATES AREA OF PROPOSED BUILDING ADDITIONS (2025)
— · —	INDICATES AREA OF EXISTING FIRE RATED PARTITION

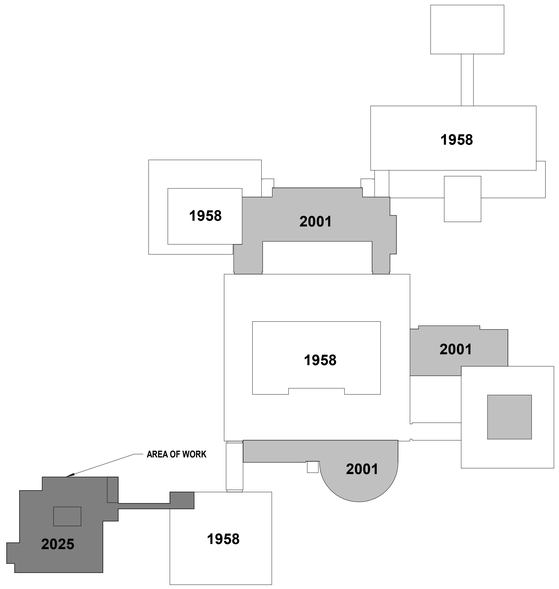

H2M architects + engineers
538 Broad Hollow Road, 4th Floor East
Melville, NY 11747
631.756.8000 • www.h2m.com
Architecture & Landscape Architecture: No Certificate Required
Engineering Certificate of Authorization No.: 0018178

CONSULTANTS:

MARK	DATE	DESCRIPTION

REGISTERED ARCHITECT KEVIN MICHAEL MEDLER 038379 STATE OF NEW YORK

KEVIN M. MEDLER, R.A.
NY PROFESSIONAL ARCHITECT Lic. No. 038379

"IN THE ACTUAL USE OF THE DOCUMENT, ONLY BY A LICENSED PROFESSIONAL IN ILLINOIS."

DESIGNED BY:	DRAWN BY:	CHECKED BY:	REVIEWED BY:
CWP	DOD/NPO	Checker	

PROJECT No:	DATE:	SCALE:
WPSD 2203	MARCH 2025	AS SHOWN

CLIENT

WHITE PLAINS CITY SCHOOL DISTRICT

ADDITION AT WHITE PLAINS HIGH SCHOOL

550 NORTH STREET, WHITE PLAINS, NY 10605

66-22-00-01-0-016-030

CONTRACT

ALL CONTRACTS

STATUS

FINAL BID SET

SHEET TITLE

CODE ANALYSIS FIRE AREA BUILDING 'E', BUILDING 'F'

DRAWING No.

G 116.00

C:\Users\kdesouza\Documents\WPSD2203_Central01_A_DDsSouzaDGR118.rvt

3/6/2025 2:33:19 PM

COM*check* Software Version COMcheckWeb

Envelope Compliance Certificate

Project Information

Energy Code:	90.1 (2019) Standard
Project Title:	ADDITION AT WHITE PLAINS HIGH SCHOOL
Location:	White Plains, New York
Climate Zone:	5a
Project Type:	Addition
Vertical Glazing / Wall Area:	50%
Performance Sim. Specs:	EnergyPlus 8.1.0.009 (EPW: USA_NY_New.York-LaGuardia.AP.725030_TMY3.epw)

Construction Site:	Owner/Agent:	Designer/Contractor:
550 North Street White Plains, NY 10605	Ann Vaccaro-Teich White Plains City School District 5 Homeside Lane White Plains, NY 10605 914-422-2061 annvaccaroteich@wpcsd.k12.ny.us	Cole Podolsky H2M architect + engineers 538 Broad Hollow Road, 4th Floor East Melville, NY 11747 631.756.8000 cpodolsky@H2M.com

Building Area	Floor Area
1-School/University : Nonresidential	49000

Envelope Assemblies

Assembly	Gross Area or Perimeter	Cavity R-Value	Cont. R-Value	Proposed U-Factor	Budget U-Factor(a)
Roof 1: Insulation Entirely Above Deck, [Bldg. Use 1 - School/University]	23367	---	30.0	0.032	0.032
Floor 1: Slab-On-Grade:Unheated Fully insulated (uniform R-value across perimeter + under entire slab), [Bldg. Use 1 - School/University] (c)	650	---	10.0	0.360	0.520
NORTH					
Exterior Wall 1: Steel-Framed, 16" o.c., [Bldg. Use 1 - School/University]	4764	14.0	12.9	0.047	0.055
Window 1: Metal Frame:Operable, Perf. Specs.: Product ID Kawneer, SHGC 0.30, PF 0.04, VT 0.70, [Bldg. Use 1 - School/University] (b)	170	---	---	0.380	0.450
Window 2: Metal Frame: Fixed, Perf. Specs.: Product ID KAWNEER, SHGC 0.11, PF 0.04, VT 0.05, [Bldg. Use 1 - School/University] (b)	2257	---	---	0.380	0.360
Door 1: Glass (> 50% glazing):Metal Frame, Entrance Door, Perf. Specs.: Product ID DOOR, SHGC 0.29, PF 0.04, VT 0.70, [Bldg. Use 1 - School/University] (b)	124	---	---	0.300	0.630
Door 1 copy 1: Insulated Metal, Swinging, [Bldg. Use 1 - School/University]	134	---	---	0.290	0.370
Basement Wall 1: Solid Concrete:10" Thickness, Normal Density, Furring: None, Wall Ht 10.5, Depth B.G. 9.8, [Bldg. Use 1 - School/University]	300	---	10.0	0.087	0.108
EAST					
Exterior Wall 1 copy 1: Steel-Framed, 16" o.c., [Bldg. Use 1 -	6165	14.0	12.9	0.047	0.055

Assembly	Gross Area or Perimeter	Cavity R-Value	Cont. R-Value	Proposed U-Factor	Budget U-Factor(a)
School/University]					
Window 1 copy 1: Metal Frame:Operable, Perf. Specs.: Product ID Kawneer, SHGC 0.30, PF 0.04, VT 0.70, [Bldg. Use 1 - School/University] (b)	260	---	---	0.380	0.450
Window 2 copy 1: Metal Frame: Fixed, Perf. Specs.: Product ID KAWNEER, SHGC 0.11, PF 0.04, VT 0.05, [Bldg. Use 1 - School/University] (b)	2727	---	---	0.380	0.360
Door 1 copy 1: Glass (> 50% glazing):Metal Frame, Entrance Door, Perf. Specs.: Product ID DOOR, SHGC 0.29, PF 0.04, VT 0.70, [Bldg. Use 1 - School/University] (b)	62	---	---	0.300	0.630
Door 1 copy 2: Insulated Metal, Swinging, [Bldg. Use 1 - School/University]	36	---	---	0.290	0.370
SOUTH					
Exterior Wall 1 copy 2: Steel-Framed, 16" o.c., [Bldg. Use 1 - School/University]	4743	14.0	12.9	0.047	0.055
Window 1 copy 1: Metal Frame:Operable, Perf. Specs.: Product ID Kawneer, SHGC 0.30, PF 0.04, VT 0.70, [Bldg. Use 1 - School/University] (b)	230	---	---	0.380	0.450
Window 2 copy 1: Metal Frame: Fixed, Perf. Specs.: Product ID KAWNEER, SHGC 0.11, PF 0.04, VT 0.05, [Bldg. Use 1 - School/University] (b)	1826	---	---	0.380	0.360
Door 1 copy 1: Glass (> 50% glazing):Metal Frame, Entrance Door, Perf. Specs.: Product ID DOOR, SHGC 0.29, PF 0.04, VT 0.70, [Bldg. Use 1 - School/University] (b)	72	---	---	0.300	0.630
WEST					
Exterior Wall 1 copy 3: Steel-Framed, 16" o.c., [Bldg. Use 1 - School/University]	6176	14.0	12.9	0.047	0.055
Window 1 copy 2: Metal Frame:Operable, Perf. Specs.: Product ID Kawneer, SHGC 0.30, PF 0.04, VT 0.70, [Bldg. Use 1 - School/University] (b)	230	---	---	0.380	0.450
Window 2 copy 2: Metal Frame: Fixed, Perf. Specs.: Product ID KAWNEER, SHGC 0.11, PF 0.04, VT 0.05, [Bldg. Use 1 - School/University] (b)	2904	---	---	0.380	0.360
Door 1 copy 2: Glass (> 50% glazing):Metal Frame, Entrance Door, Perf. Specs.: Product ID DOOR, SHGC 0.29, PF 0.04, VT 0.70, [Bldg. Use 1 - School/University] (b)	98	---	---	0.300	0.630

(a) Budget U-factors are used for software baseline calculations ONLY, and are not code requirements.
(b) Fenestration product performance must be certified in accordance with NFRC and requires supporting documentation.
(c) Slab-On-Grade proposed and budget U-factors shown in table are F-factors.

Envelope PASSES: Design 1% better than code

Envelope Compliance Statement

Compliance Statement: The proposed envelope design represented in this document is consistent with the building plans, specifications, and other calculations submitted with this permit application. The proposed envelope systems have been designed to meet the 90.1 (2019) Standard requirements in COM*check* Version COMcheckWeb and to comply with any applicable mandatory requirements listed in the Inspection Checklist.

Name - Title Signature Date

COM*check* Software Version COMcheckWeb

Interior Lighting Compliance Certificate

Project Information

Energy Code:	90.1 (2019) Standard
Project Title:	ADDITION AT WHITE PLAINS HIGH SCHOOL
Project Type:	Addition

Construction Site:	Owner/Agent:	Designer/Contractor:
550 North Street White Plains, NY 10605	Ann Vaccaro-Teich White Plains City School District 5 Homeside Lane White Plains, NY 10605 914-422-2061 annvaccaroteich@wpcsd.k12.ny.us	Cole Podolsky H2M architect + engineers 538 Broad Hollow Road, 4th Floor East Melville, NY 11747 631.756.8000 cpodolsky@H2M.com

Allowed Interior Lighting Power

A Area Category	B Floor Area (ft2)	C Allowed Watts / ft2	D Allowed Watts
1-School/University	49000	0.72	35280
		Total Allowed Watts =	35280

Proposed Interior Lighting Power

A Fixture ID : Description / Lamp / Wattage Per Lamp / Ballast	B Lamps/ Fixture	C # of Fixture	D Fixture Watt.	E (C X D)
1-School/University				
LED: F1: Other:	1	159	31	4929
LED: F1E: Other:	1	19	31	589
LED: F2: Other:	1	1	195	195
LED: F3: Other:	1	13	16	208
LED: F3E: Other:	1	7	16	112
LED: F4: Other:	1	17	42	714
LED: F4E: Other:	1	8	42	336
LED: F5: Other:	1	16	19	304
LED: F5E: Other:	1	3	19	57
LED: F6: Other:	1	301	32	9632
LED: F6E: Other:	1	4	32	128
LED: F7: Other:	1	24	41	984
LED: F7E: Other:	1	5	41	205
LED: F8: Other:	1	8	108	864
LED: F9: Other:	1	13	30	390
LED: F10: Other:	1	25	11	275
LED: F11: Other:	1	17	20	340
LED: F12: Other:	1	8	10	80
LED: F13: Other:	1	8	20	160
LED: F14: Other:	1	80	12	960

A Fixture ID : Description / Lamp / Wattage Per Lamp / Ballast	B Lamps/ Fixture	C # of Fixture	D Fixture Watt.	E (C X D)
LED: F14E: Other:	1	8	12	96
LED: F15: Other:	1	2	12	24
LED: F16: Other:	1	3	32	96
LED: F17: Other:	1	6	142	852
LED: F18: Other:	1	2	32	64
LED: F21: Other:	1	57	20	1140
LED: EX: Other:	1	37	2	63
LED: EXC: Other:	1	1	2	2
			Total Proposed Watts =	23799

Interior Lighting PASSES: Design 33% better than code

Interior Lighting Compliance Statement

Compliance Statement: The proposed interior lighting design represented in this document is consistent with the building plans, specifications, and other calculations submitted with this permit application. The proposed interior lighting systems have been designed to meet the 90.1 (2019) Standard requirements in COM*check* Version COMcheckWeb and to comply with any applicable mandatory requirements listed in the Inspection Checklist.

Name - Title Signature Date

COM*check* Software Version COMcheckWeb

Exterior Lighting Compliance Certificate

Project Information

Energy Code:	90.1 (2019) Standard
Project Title:	ADDITION AT WHITE PLAINS HIGH SCHOOL
Project Type:	Addition
Exterior Lighting Zone	2 (Residential mixed use area (LZ2))

Construction Site:	Owner/Agent:	Designer/Contractor:
550 North Street White Plains, NY 10605	Ann Vaccaro-Teich White Plains City School District 5 Homeside Lane White Plains, NY 10605 914-422-2061 annvaccaroteich@wpcsd.k12.ny.us	Cole Podolsky H2M architect + engineers 538 Broad Hollow Road, 4th Floor East Melville, NY 11747 631.756.8000 cpodolsky@H2M.com

Allowed Exterior Lighting Power

A Area/Surface Category	B Quantity	C Allowed Watts /	D Tradable Wattage	E Allowed Watts (B X C)
Walkway >= 10 feet wide	21676 ft2	0.1	Yes	2168
Parking area	520 ft2	0.04	Yes	21
		Total Tradable Watts (a) =		2188
		Total Allowed Watts =		2188
		Total Allowed Supplemental Watts (b) =		400

(a) Wattage tradeoffs are only allowed between tradable areas/surfaces.
(b) A supplemental allowance equal to 400 watts may be applied toward compliance of both non-tradable and tradable areas/surfaces.

Proposed Exterior Lighting Power

A Fixture ID : Description / Lamp / Wattage Per Lamp / Ballast	B Lamps/ Fixture	C # of Fixture	D Fixture Watt.	E (C X D)
Walkway >= 10 feet wide (21676 ft2): Tradable Wattage				
LED: FB: Other:	1	13	14	182
LED: FC: Other:	1	12	26	312
LED: FCE: Other:	1	12	26	312
Parking area (520 ft2): Tradable Wattage				
LED: FA: Other:	1	4	30	120
			Total Tradable Proposed Watts =	926

Exterior Lighting PASSES: Design 64% better than code

Exterior Lighting Compliance Statement

Compliance Statement: The proposed exterior lighting design represented in this document is consistent with the building plans, specifications, and other calculations submitted with this permit application. The proposed exterior lighting systems have been designed to meet the 90.1 (2019) Standard requirements in COM*check* Version COMcheckWeb and to comply with any applicable mandatory requirements listed in the Inspection Checklist.

Name - Title Signature Date

COM*check* Software Version COMcheckWeb

Mechanical Compliance Certificate

Project Information

Energy Code:	90.1 (2019) Standard
Project Title:	ADDITION AT WHITE PLAINS HIGH SCHOOL
Location:	White Plains, New York
Climate Zone:	5a
Project Type:	Addition

Construction Site:	Owner/Agent:	Designer/Contractor:
550 North Street White Plains, NY 10605	Ann Vaccaro-Teich White Plains City School District 5 Homeside Lane White Plains, NY 10605 914-422-2061 annvaccaroteich@wpcsd.k12.ny.us	Cole Podolsky H2M architect + engineers 538 Broad Hollow Road, 4th Floor East Melville, NY 11747 631.756.8000 cpodolsky@H2M.com

Mechanical Systems List

Quantity	System Type & Description
1	HVAC System (Unknown): VRF Condensing Unit, Air Cooled w/ Heat Recovery Heat Pump Heating Mode: Capacity = 116 kBtu/h, Proposed Efficiency = 3.80 COP, Required Efficiency = 3.20 COP Cooling Mode: Capacity = 146 kBtu/h, Proposed Efficiency = 12.00 EER, Required Efficiency = 10.40 EER Proposed Part Load Efficiency = 22.50 IEER, Required Part Load Efficiency = 13.70 IEER Fan System: None
1	HVAC System (Unknown): VRF Condensing Unit, Air Cooled w/ Heat Recovery Heat Pump Heating Mode: Capacity = 85 kBtu/h, Proposed Efficiency = 4.30 COP, Required Efficiency = 3.30 COP Cooling Mode: Capacity = 99 kBtu/h, Proposed Efficiency = 12.80 EER, Required Efficiency = 10.80 EER Proposed Part Load Efficiency = 25.30 IEER, Required Part Load Efficiency = 14.40 IEER Fan System: None
1	HVAC System (Unknown): VRF Condensing Unit, Air Cooled w/ Heat Recovery Heat Pump Heating Mode: Capacity = 152 kBtu/h, Proposed Efficiency = 3.70 COP, Required Efficiency = 3.20 COP Cooling Mode: Capacity = 202 kBtu/h, Proposed Efficiency = 11.00 EER, Required Efficiency = 10.40 EER Proposed Part Load Efficiency = 20.50 IEER, Required Part Load Efficiency = 13.70 IEER Fan System: None
1	HVAC System (Unknown): VRF Condensing Unit, Air Cooled w/ Heat Recovery Heat Pump Heating Mode: Capacity = 212 kBtu/h, Proposed Efficiency = 3.70 COP, Required Efficiency = 3.20 COP Cooling Mode: Capacity = 272 kBtu/h, Proposed Efficiency = 10.60 EER, Required Efficiency = 9.30 EER Proposed Part Load Efficiency = 19.20 IEER, Required Part Load Efficiency = 12.50 IEER Fan System: None
1	HVAC System (Unknown): VRF Condensing Unit, Air Cooled w/ Heat Recovery Heat Pump Heating Mode: Capacity = 239 kBtu/h,

Quantity	System Type & Description
	Proposed Efficiency = 3.60 COP, Required Efficiency = 3.20 COP Cooling Mode: Capacity = 298 kBtu/h, Proposed Efficiency = 11.00 EER, Required Efficiency = 9.30 EER Proposed Part Load Efficiency = 19.30 IEER, Required Part Load Efficiency = 12.50 IEER Fan System: None
1	HVAC System (Single Zone): Cooling: 17 each - VRF Zone Fan Unit, Capacity = 5 kBtu/h No minimum efficiency requirement applies
1	HVAC System (Single Zone): Cooling: 5 each - VRF Zone Fan Unit, Capacity = 7 kBtu/h No minimum efficiency requirement applies
1	HVAC System (Single Zone): Cooling: 1 each - VRF Zone Fan Unit, Capacity = 9 kBtu/h No minimum efficiency requirement applies
1	HVAC System (Single Zone): Cooling: 11 each - VRF Zone Fan Unit, Capacity = 12 kBtu/h No minimum efficiency requirement applies
1	HVAC System (Single Zone): Cooling: 2 each - VRF Zone Fan Unit, Capacity = 15 kBtu/h No minimum efficiency requirement applies
1	HVAC System (Single Zone): Cooling: 18 each - VRF Zone Fan Unit, Capacity = 18 kBtu/h No minimum efficiency requirement applies
1	HVAC System (Single Zone): Cooling: 3 each - VRF Zone Fan Unit, Capacity = 24 kBtu/h No minimum efficiency requirement applies
1	HVAC System (Single Zone): Cooling: 9 each - VRF Zone Fan Unit, Capacity = 36 kBtu/h No minimum efficiency requirement applies
1	HVAC System (Single Zone): Cooling: 5 each - VRF Zone Fan Unit, Capacity = 48 kBtu/h No minimum efficiency requirement applies
1	HVAC System (Single Zone): Cooling: 2 each - DX DOAS w/ Heat Recovery (Dehumidification), Capacity = 197 kBtu/h, Air-Cooled Condenser, Air Economizer Proposed Efficiency = 5.30 ISMRE, Required Efficiency = 5.20 ISMRE Proposed Part Load Efficiency = 0.00 , Required Part Load Efficiency = 0.00 Fan System: FAN SYSTEM 1 -- Compliance (Motor nameplate HP and fan efficiency method) : Passes Fans: Supply Fan Supply, Single-Zone VAV, 6700 CFM, 6.8 motor nameplate hp, 1.03 fan energy index

Mechanical Compliance Statement

Compliance Statement: The proposed mechanical design represented in this document is consistent with the building plans, specifications, and other calculations submitted with this permit application. The proposed mechanical systems have been designed to meet the 90.1 (2019) Standard requirements in COM*check* Version COMcheckWeb and to comply with any applicable mandatory requirements listed in the Inspection Checklist.

Brian Castelli, PE [signature] 04/04/2024
Name - Title Signature Date

H2M architects + engineers
538 Broad Hollow Road, 4th Floor East
Melville, NY 11747
631.756.8000 • www.h2m.com
Architecture & Landscape Architecture: No Certificate Required
Engineering Certificate of Authorization No.: 0018178

CONSULTANTS:

MARK	DATE	DESCRIPTION

REGISTERED ARCHITECT · KEVIN MICHAEL MEDLER · 038379 · STATE OF NEW YORK

07/31/2024
Exp. Date

KEVIN M. MEDLER, R.A.
NY PROFESSIONAL ARCHITECT Lic. No. 038379
"ALTERATION OF THIS DOCUMENT EXCEPT BY A LICENSED PROFESSIONAL IS ILLEGAL"

DESIGNED BY:	DRAWN BY:	CHECKED BY:	REVIEWED BY:
CWP	DOD/NPO	Checker	

PROJECT No:	DATE:	SCALE:
WPSD 2203	MARCH 2025	AS SHOWN

CLIENT
WHITE PLAINS CITY SCHOOL DISTRICT

ADDITION AT WHITE PLAINS HIGH SCHOOL

550 NORTH STREET, WHITE PLAINS, NY 10605

66-22-00-01-0-016-030

CONTRACT
CONTRACT G GENERAL CONSTRUCTION

STATUS
FINAL BID SET

SHEET TITLE
CODE ANALYSIS BEC COM-CHECK

DRAWING No.
G 117.00

C:\Users\ddesouza\Documents\WPSD2203_Central21_A_DDeSouzaD8TU8.rvt
3/6/2025 2:53:29 PM

SECTION 303-Changes in Level

303.1 GENERAL

CHANGES IN LEVEL IN FLOOR OR GROUND SURFACES SHALL COMPLY WITH SECTION 303.

303.2 VERTICAL

CHANGES IN LEVEL OF 1/4" INCH (6.4 MM) MAXIMUM IN HEIGHT SHALL BE PERMITTED TO BE VERTICAL.

FIG. 303.2
VERTICAL CHANGES IN LEVEL

303.3 BEVELED

CHANGES IN LEVEL BETWEEN 1/4" INCH (6.4 MM) IN HEIGHT AND NOT MORE 1/2" INCH (13 MM) HIGH MAXIMUM IN HEIGHT SHALL BE BEVELED WITH A SLOPE NOT STEEPER THAN 1:2.

303.4 RAMPS

CHANGES IN LEVEL GREATER THAN 1/2" INCH (13 MM) IN HEIGHT SHALL BE RAMPED AND SHALL COMPLY WITH SECTION 405 OR 406.

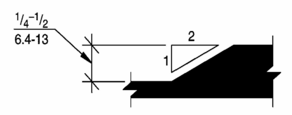

FIG. 303.3
BEVELED CHANGES IN LEVEL

SECTION 304-Wheelchair Turning Space

304.1 GENERAL

A WHEELCHAIR TURNING SPACE SHALL COMPLY WITH SECTION 304

304.2 FLOOR SURFACE

FLOOR OR GROUND SURFACES OF A WHEELCHAIR TURNING SPACE SHALL HAVE A SLOPE NOT STEEPER THAN 1:48 AND SHALL COMPLY WITH SECTION 302.

304.3 SIZE

WHEELCHAIR TURNING SPACE SHALL COMPLY WITH SECTION 304.3.1 OR 304.3.2. INCLUDE KNEE AND TOE CLEARANCE COMPLYING WITH SECTION 306 ONLY AT THE END OF EITHER THE BASE OR ONE ARM.

304.3.1 CIRCULAR SPACE

THE WHEELCHAIR TURNING SPACE SHALL BE A CIRCULAR SPACE NOT LESS THAN 60 INCHES (1525 MM) DIAMETER MINIMUM. WHEELCHAIR TURNING SPACE SHALL BE PERMITTED TO INCLUDE KNEE AND TOE CLEARANCE COMPLYING WITH SECTION 306.

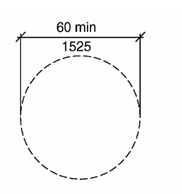

(A) CIRCULAR

304.3.2 T-SHAPED SPACE

THE WHEELCHAIR TURNING SPACE SHALL BE A T-SHAPED SPACE WITHIN A 60 INCH (1525 MM) MINIMUM SQUARE WITH ARMS AND BASE 36 INCHES (915 MM) WIDE MINIMUM. EACH ARM OF THE "T" SHALL BE CLEAR OF OBSTRUCTIONS 12 INCHES (610 MM) MINIMUM IN EACH DIRECTION AND THE BASE SHALL BE CLEAR OF OBSTRUCTIONS 24" INCHES (610 MM) MINIMUM.

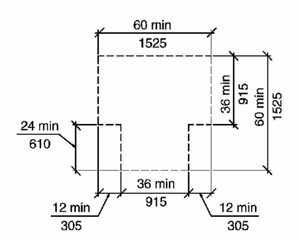

(B) T-SHAPED
FIG. 304.3
SIZE OF WHEELCHAIR TURNING SPACE

304.3 DOOR SWING

UNLESS OTHERWISE SPECIFIED, DOORS SHALL BE PERMITTED TO SWING INTO WHEELCHAIR TURNING SPACES.

SECTION 305-Clear Floor Space

305.1 GENERAL

A CLEAR FLOOR SPACE SHALL COMPLY WITH SECTION 305.

305.2 FLOOR SURFACES

FLOOR SURFACES OF A CLEAR FLOOR SPACE SHALL HAVE A SLOPE NOT STEEPER THAN 1:48 AND SHALL COMPLY WITH SECTION 302. CHANGES IN LEVEL ARE NOT PERMITTED WITHIN THE CLEAR FLOOR SPACE.

305.3 SIZE

THE CLEAR FLOOR SPACE SHALL BE 48 INCHES (1220 MM) MINIMUM IN LENGTH AND 30 INCHES (760MM) MINIMUM IN WIDTH

305.4 KNEE AND TOE CLEARANCE

UNLESS OTHERWISE SPECIFIED, CLEAR FLOOR SPACE SHALL BE PERMITTED TO INCLUDE KNEE AND TOE CLEARANCE COMPLYING WITH SECTION 306.

305.5 POSITION

UNLESS OTHERWISE SPECIFIED, THE CLEAR FLOOR SPACE SHALL BE POSITIONED FOR EITHER FORWARD OR PARALLEL APPROACH TO AN ELEMENT.

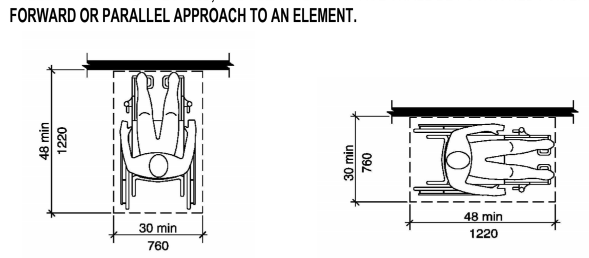

(A) FORWARD (B) PARALLEL
FIG. 305.5
POSITION OF CLEAR FLOOR SPACE

305.6 APPROACH

ONE FULL, UNOBSTRUCTED SIDE OF THE CLEAR FLOOR SPACE SHALL ADJOIN OR OVERLAP AN ACCESSIBLE ROUTE OR ADJOIN ANOTHER CLEAR FLOOR SPACE.

305.7 ALCOVES

IF A CLEAR FLOOR SPACE IS IN AN ALCOVE OR OTHERWISE CONFINED ON ALL OR PART OF THREE SIDES, ADDITIONAL MANEUVERING CLEARANCES COMPLYING WITH SECTIONS 305.7.1 AND 305.7.2 SHALL BE PROVIDED, AS APPLICABLE.

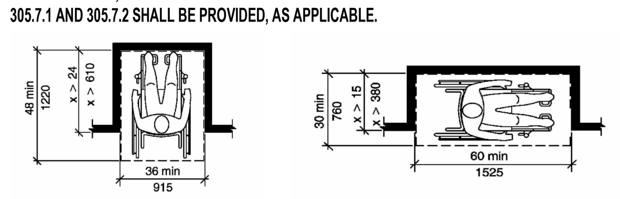

(A) FORWARD APPROACH (B) PARALLEL APPROACH
FIG. 305.7
MANEUVERING CLEARANCE IN AN ALCOVE

305.7.1 PARALLEL APPROACH

WHERE THE CLEAR FLOOR SPACE IS POSITIONED FOR A PARALLEL APPROACH, THE ALCOVE SHALL BE 60" INCHES (1525 MM) MINIMUM IN WIDTH WHERE THE DEPTH EXCEEDS 15".

305.7.2 FORWARD APPROACH

WHERE THE CLEAR FLOOR SPACE IS POSITIONED FOR A FORWARD APPROACH, THE ALCOVE SHALL BE 36" INCHES (915 MM) MINIMUM IN WIDTH WHERE THE DEPTH EXCEEDS 24" INCHES (610 MM).

SECTION 306-Knee and Toe Clearance

306.1 GENERAL

WHERE SPACE BENEATH AN ELEMENT IS INCLUDED AS PART OF CLEAR FLOOR OR GROUND SPACE AT AN ELEMENT, CLEARANCE AT AN ELEMENT, OR A WHEELCHAIR TURNING SPACE, THE SPACE SHALL COMPLY WITH SECTION 306. ADDITIONAL SPACE NOT BE PROHIBITED BENEATH AN ELEMENT, BUT SHALL NOT BE CONSIDERED AS PART OF THE CLEAR FLOOR SPACE OR TURNING SPACE

306.2 TOE CLEARANCE

306.2.1 GENERAL

SPACE UNDER AN ELEMENT BETWEEN THE FLOOR OR GROUND AND 9" INCHES (230 MM) ABOVE THE FLOOR OR GROUND SHALL BE TOE CLEARANCE AND SHALL COMPLY WITH SECTION 306.2.

306.2 TOE CLEARANCE

306.2.1 GENERAL

SPACE UNDER AN ELEMENT BETWEEN THE FLOOR OR GROUND AND 9" INCHES (230 MM) ABOVE THE FLOOR OR GROUND SHALL BE TOE CLEARANCE AND SHALL COMPLY WITH SECTION 306.2.

306.2.2 MAXIMUM DEPTH

TOE CLEARANCE SHALL BE PERMITTED TO EXTEND 25" INCHES (635 MM) MAXIMUM UNDER AN ELEMENT.

306.2.3 MINIMUM DEPTH

WHERE TOE CLEARANCE IS REQUIRED AT AN ELEMENT AS PART OF A CLEAR FLOOR OR GROUND SPACE, THE TOE CLEARANCE SHALL EXTEND 17" INCHES (430 MM) MINIMUM BENEATH THE ELEMENT

306.2.4 ADDITIONAL CLEARANCE

SPACE EXTENDING GREATER THAN 6" INCHES (150 MM) BEYOND THE AVAILABLE KNEE CLEARANCE AT 9" INCHES (230 MM) ABOVE THE FLOOR OR GROUND SHALL NOT BE INCLUDED IN TOE CLEARANCE.

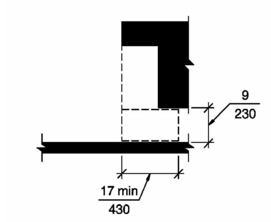

FIG. 306.2
TOE CLEARANCE

306.2.5 WIDTH

TOE CLEARANCE SHALL BE 30" INCHES (760 MM) WIDE MINIMUM.

306.3 KNEE CLEARANCE

306.3.1 WIDTH

SPACE UNDER AN ELEMENT BETWEEN 9" INCHES (230 MM) AND 27" INCHES (685 MM) ABOVE THE FLOOR OR GROUND SHALL BE KNEE CLEARANCE AND SHALL COMPLY WITH SECTION 306.3.

306.3.2 MAXIMUM DEPTH

KNEE CLEARANCE SHALL BE PERMITTED TO EXTEND 25" INCHES (635 MM) MAXIMUM UNDER AN ELEMENT AT 9" INCHES (230 MM) ABOVE THE FLOOR OR GROUND.

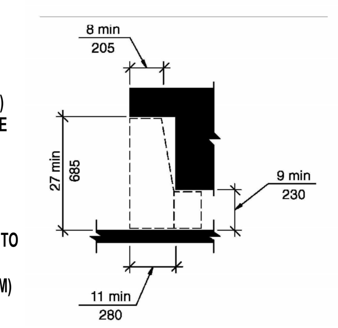

FIG. 306.3
KNEE CLEARANCE

306.3.3 MINIMUM DEPTH

WHERE KNEE CLEARANCE IS REQUIRED BENEATH AN ELEMENT AS PART OF A CLEAR FLOOR OR GROUND SPACE, THE KNEE CLEARANCE SHALL BE 11" INCHES (280 MM) DEEP MINIMUM AT 9" INCHES (230 MM) ABOVE THE FLOOR OR GROUND, AND 8" INCHES (205 MM) DEEP MINIMUM AT 27" INCHES (685 MM) ABOVE THE FLOOR OR GROUND.

306.3.4 CLEARANCE REDUCTION

BETWEEN 9" INCHES (230 MM) AND 27" INCHES (685 MM) ABOVE THE FLOOR OR GROUND, THE KNEE CLEARANCE SHALL BE PERMITTED TO BE REDUCED AT A RATE OF 1" INCH (25 MM) FOR EACH 6" INCHES (150 MM) IN HEIGHT.

306.3.5 WIDTH

KNEE CLEARANCE SHALL BE 30" INCHES (760 MM) WIDE MINIMUM.

SECTION 307- Protruding Objects

307.1 GENERAL

PROTRUDING OBJECTS ON CIRCULATION PATHS SHALL COMPLY WITH SECTION 307.

307.2 PROTRUSION LIMITS

OBJECTS WITH LEADING EDGES MORE THAN 27" INCHES (685 MM) AND NOT MORE THAN 80" INCHES (2030 MM) ABOVE THE FLOOR SHALL PROTRUDE 4" INCHES (100MM) MAXIMUM HORIZONTALLY INTO THE CIRCULATION PATH.

EXCEPTION:

HANDRAILS SHALL BE PERMITTED TO PROTRUDE 4- 1/2" INCHES (115 MM) MAXIMUM.

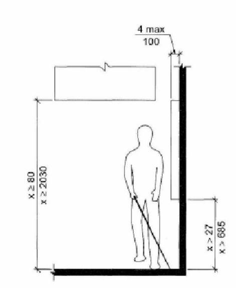

FIG. 307.2
LIMITS OF PROTRUDING OBJECTS

307.3 POST-MOUNTED OBJECTS

OBJECTS ON POSTS OR PYLONS SHALL BE PERMITTED TO OVERHANG 4" INCHES (100MM) MAXIMUM WHERE MORE THAN 27" INCHES (685 MM) AND NOT MORE THAN 80" INCHES (2030 MM) ABOVE THE FLOOR. OBJECTS ON MULTIPLE POSTS OR PYLONS WHERE THE CLEAR DISTANCE BETWEEN THE POSTS OR PYLONS IS GREATER THAN 12" INCHES (305 MM) SHALL HAVE THE LOWEST EDGE OF SUCH OBJECT EITHER 27" INCHES (685 MM) MAXIMUM OR 80" INCHES (2030 MM) MINIMUM ABOVE THE FLOOR.

EXCEPTION:

SLOPING PORTIONS OF HANDRAILS BETWEEN THE TOP AND BOTTOM RISER OF STAIRS AND ABOVE THE RAMP RUN SHALL NOT BE REQUIRED TO COMPLY WITH SECTION 307.3.

307.4 VERTICAL CLEARANCE

VERTICAL CLEARANCE SHALL BE 80" INCHES (2030) MINIMUM. RAILS OR OTHER BARRIERS SHALL BE PROVIDED WHERE THE VERTICAL CLEARANCE IS LESS THAN 80" INCHES (2030 MM). THE LEADING EDGE OF SUCH RAILS OR BARRIER SHALL BE LOCATED 27" INCHES (685 MM) MAXIMUM ABOVE THE FLOOR.

EXCEPTION:

DOOR CLOSERS AND DOOR STOPS SHALL BE PERMITTED TO BE 78" INCHES (1980 MM) MINIMUM ABOVE THE FLOOR.

307.5 REQUIRED CLEAR WIDTH

PROTRUDING OBJECTS SHALL NOT REDUCE THE CLEAR WIDTH REQUIRED FOR ACCESSIBLE ROUTES.

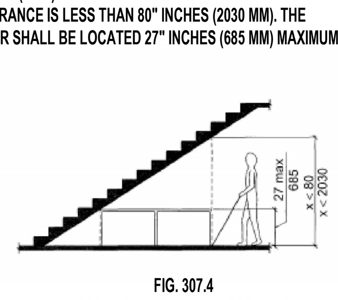

FIG. 307.4
REDUCED VERTICAL CLEARANCE

Section 308-Reach Ranges

308.1 GENERAL

REACH RANGES SHALL COMPLY WITH SECTION 308.

308.2 FORWARD REACH

308.2.1 UNOBSTRUCTED

WHERE A FORWARD REACH IS UNOBSTRUCTED, THE HIGH FORWARD REACH SHALL BE 48" INCHES (1220 MM) MAXIMUM AND THE LOW FORWARD REACH SHALL BE 15" INCHES (380 MM) MINIMUM ABOVE THE FLOOR.

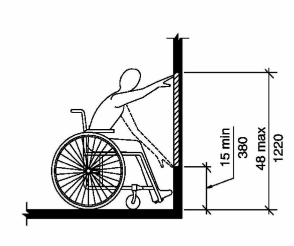

FIG. 308.2.1
UNOBSTRUCTED FORWARD REACH

308.2.2 OBSTRUCTED HIGH REACH

WHERE A HIGH FORWARD REACH IS OVER AN OBSTRUCTION, THE CLEAR FLOOR SPACE COMPLYING WITH SECTION 305 SHALL EXTEND BENEATH THE ELEMENT FOR A DISTANCE NOT LESS THAN THE REQUIRED REACH DEPTH OVER THE OBSTRUCTION. THE HIGH FORWARD REACH SHALL BE 48" INCHES (1220 MM) MAXIMUM WHERE THE REACH DEPTH IS 20" INCHES (510 MM) MAXIMUM. WHERE THE REACH DEPTH EXCEEDS 20" INCHES (510 MM), THE HIGH FORWARD REACH SHALL BE 44" INCHES (1120 MM) MAXIMUM AND THE REACH DEPTH SHALL BE 25" INCHES (635 MM) MAXIMUM.

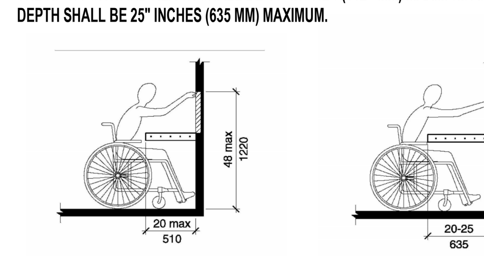

(a) (b)
FIG. 308.2.2
OBSTRUCTED HIGH FORWARD REACH

308.3 SIDE REACH

308.3.1 UNOBSTRUCTED

WHERE A CLEAR FLOOR SPACE COMPLYING WITH SECTION 305 ALLOWS A PARALLEL APPROACH TO AN ELEMENT AND THE EDGE OF THE CLEAR FLOOR SPACE IS 10" INCHES MAXIMUM FROM THE ELEMENT, THE HIGH SIDE REACH SHALL BE 48" INCHES MAXIMUM AND THE LOW SIDE REACH SHALL BE 15" INCHES MINIMUM ABOVE THE FLOOR.

EXCEPTION:

EXISTING ELEMENTS SHALL BE PERMITTED AT 54" INCHES (1370 MM) MAXIMUM ABOVE THE FLOOR.

308.3.2 OBSTRUCTED HIGH REACH

WHERE A CLEAR FLOOR SPACE ALLOWS A PARALLEL APPROACH TO AN OBJECT AND THE HIGH SIDE REACH IS OVER AN OBSTRUCTION, THE HEIGHT OF THE OBSTRUCTION SHALL BE 34" INCHES (865 MM) MAXIMUM AND THE DEPTH OF THE OBSTRUCTION SHALL BE 24" INCHES (610 MM) MAXIMUM. THE HIGH SIDE REACH SHALL BE 48" INCHES (1220 MM) MAXIMUM FOR A REACH DEPTH OF 10" INCHES (255 MM) MAXIMUM. WHERE THE REACH DEPTH EXCEEDS 10" INCHES (255 MM), THE HIGH SIDE REACH SHALL BE 46" INCHES (1170 MM) MAXIMUM FOR A REACH DEPTH OF 24" INCHES (610 MM) MAXIMUM

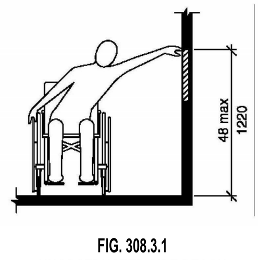

FIG. 308.3.1
UNOBSTRUCTED SIDE REACH

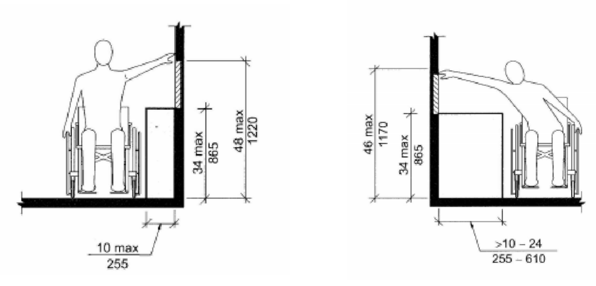

(a) (b)
FIG. 308.3.2
OBSTRUCTED HIGH SIDE REACH

EXCEPTION:

AT WASHING MACHINES AND CLOTHES DRYERS, THE HEIGHT OF THE OBSTRUCTION SHALL BE PERMITTED TO BE 36" INCHES (915 MM) MAXIMUM ABOVE THE FLOOR.

Section 402 - Accessible Routes

404.1 GENERAL

ACCESSIBLE ROUTES SHALL COMPLY WITH SECTION 402.

402.2 COMPONENTS

ACCESSIBLE ROUTES SHALL CONSISTS OF ONE OR MORE OF THE FOLLOWING COMPONENTS: WALKING SURFACES WITH A SLOPE NOT STEEPER THAN 1:20, DOORS AND DOORWAYS, RAMPS, CURB RAMPS EXCLUDING THE FLARED SIDES, ELEVATORS AND PLATFORM LIFTS. ALL COMPONENTS OF AN ACCESSIBLE ROUTE SHALL COMPLY WITH THE APPLICABLE PORTIONS OF THIS STANDARD.

Section 403 - Walking Surfaces

403.1 GENERAL

WALKING SURFACES THAT ARE A PART OF AN ACCESSIBLE ROUTE SHALL COMPLY WITH SECTION 403.

403.3 SLOPE

THE RUNNING SLOPE OF WALKING SURFACES SHALL NOT BE STEEPER THAN 1:20. THE CROSS SLOPE OF A WALKING SURFACE SHALL NOT BE STEEPER THAN 1:48.

403.4 CHANGES IN LEVEL

CHANGES IN LEVEL SHALL COMPLY WITH SECTION 303

403.5 CLEAR WIDTH

THE CLEAR WIDTH OF AN ACCESSIBLE ROUTE SHALL BE 36" INCHES (915 MM) MINIMUM.

EXCEPTION:

THE CLEAR WIDTH SHALL BE PERMITTED TO BE REDUCED TO 32" INCHES (815 MM) MINIMUM FOR A LENGTH OF 24" INCHES (610MM) MAXIMUM PROVIDED THE REDUCED WIDTH SEGMENTS ARE SEPARATED BY SEGMENTS THAT ARE 48" INCHES (1220 MM) MINIMUM IN LENGTH AND 36" INCHES (915 MM) MINIMUM IN WIDTH.

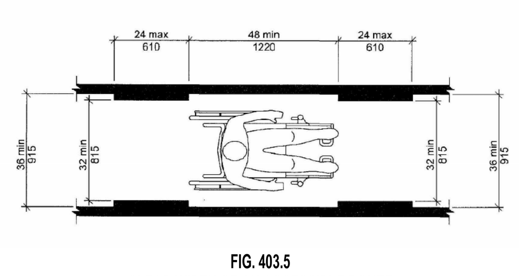

FIG. 403.5
CLEAR WIDTH OF AN ACCESSIBLE ROUTE

Section 404 - Doors and Doorways

404.1 GENERAL

DOORS AND DOORWAYS THAT ARE PART OF AN ACCESSIBLE ROUTE SHALL COMPLY WITH SECTION 404.

404.2 MANUAL DOORS

MANUAL DOORS AND DOORWAYS AND MANUAL GATES, INCLUDING TICKET GATES SHALL COMPLY WITH THE REQUIREMENTS OF SECTION 404.2.

404.2.1 DOUBLE - LEAF DOORS AND GATES

AT LEAST ONE OF THE ACTIVE LEAVES OF DOORWAYS WITH TWO LEAVES SHALL COMPLY WITH SECTIONS 404.2.2 AND 402.2.3.

404.2.2 CLEAR WIDTH

DOORWAYS SHALL HAVE A CLEAR OPENING WIDTH OF 32" INCHES (815 MM) MIN. CLEAR OPENING WITH OF DOORWAYS WITH SWINGING DOORS SHALL BE MEASURED BETWEEN THE FACE OF DOOR AND STOP, WITH THE DOOR OPEN 90 DEGREES. OPENINGS MORE THAN 24" (610 MM) INCHES IN DEPTH AT DOORS AND DOORWAYS WITHOUT DOORS SHALL PROVIDE A CLEAR OPENING WIDTH OF 36" (915 MM) MINIMUM. THERE SHALL BE NO PROJECTIONS INTO THE CLEAR OPENING WIDTH LOWER THAN 34" (865 MM) INCHES ABOVE THE FLOOR. PROJECTIONS INTO THE CLEAR OPENING WIDTH BETWEEN 34" (865 MM) INCHES AND 80" (2030 MM) INCHES ABOVE THE FLOOR SHALL NOT EXCEED 4" (100 MM) INCHES.

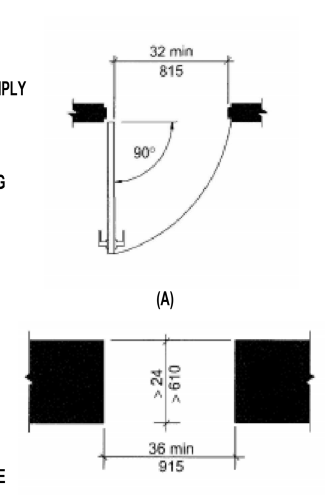

(A) (D)
FIG.404.2.2
CLEAR WIDTH OF DOORWAYS

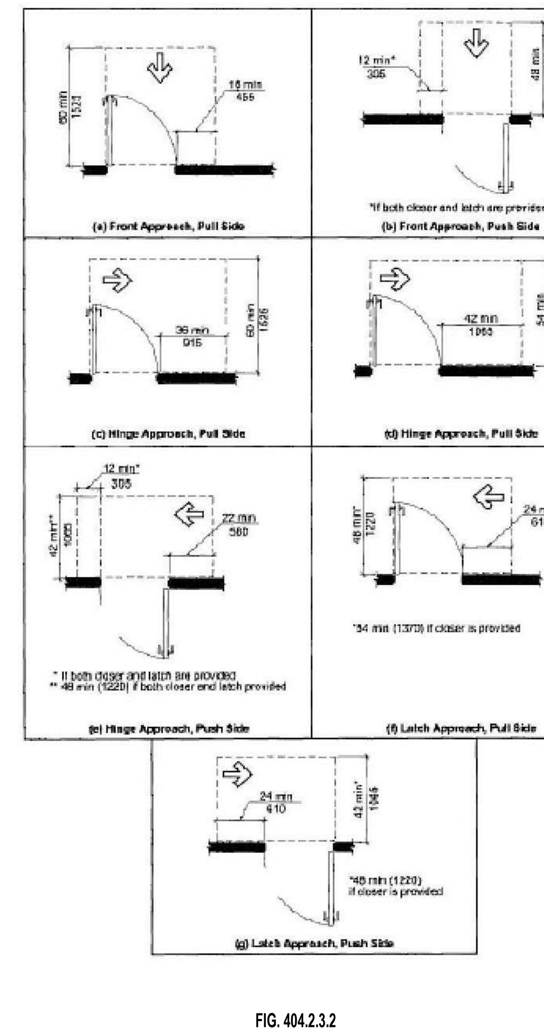

FIG. 404.2.3.2
MANEUVERING CLEARANCE AT MANUAL SWINGING DOORS

404.2.4 THRESHOLDS

IF PROVIDED, THRESHOLDS AT DOORWAYS SHALL BE 1/2" INCH (13 MM) MAXIMUM IN HEIGHT. RAISED THRESHOLDS AND CHANGES IN LEVEL AT DOORWAYS SHALL COMPLY WITH SECTIONS 302 AND 303.

404.2.5 TWO DOORS IN SERIES

DISTANCE BETWEEN TWO HINGED OR PIVOTED DOORS IN SERIES SHALL BE 48 INCHES (1220 MM) MINIMUM PLUS THE WIDTH OF ANY DOOR SWINGING INTO THE SPACE. THE SPACE BETWEEN THE DOORS SHALL PROVIDE A TURNING SPACE COMPLYING WITH SECTION 304.

404.2.6 DOOR HARDWARE

HANDLES, PULLS, LATCHES, LOCKS AND OTHER OPERABLE PARTS ON ACCESSIBLE DOORS SHALL HAVE A SHAPE THAT IS EASY TO GRASP WITH ONE HAND AND DOES NOT REQUIRE TIGHT GRASPING, PINCHING OR TWISTING OF THE WRIST TO OPERATE. OPERABLE PARTS OF SUCH HARDWARE SHALL BE 34" INCHES (865 MM) MINIMUM AND 48" INCHES (1220 MM) MAXIMUM ABOVE THE FLOOR. WHERE SLIDING DOORS ARE IN THE FULLY OPEN POSITION, OPERATING HARDWARE SHALL BE EXPOSED AND USABLE FROM BOTH SIDES.

EXCEPTION:

LOCKS USED ONLY FOR SECURITY PURPOSES AND NOT USED FOR NORMAL OPERATION SHALL NOT BE REQUIRED TO COMPLY WITH SECTION 404.2.6.

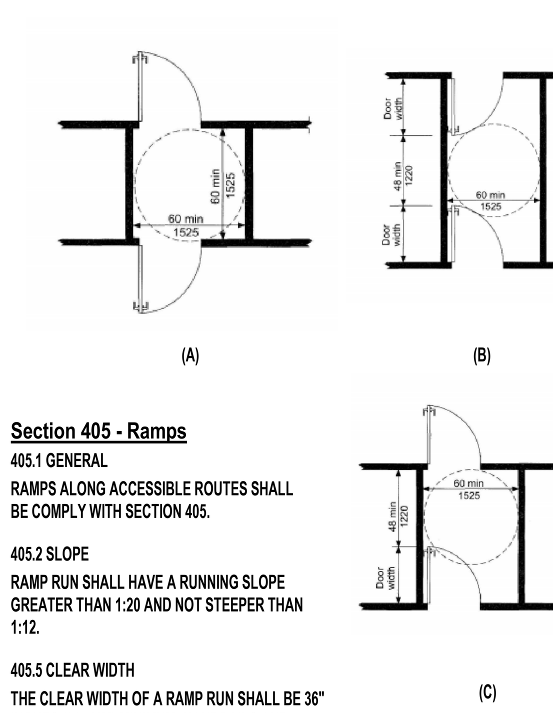

(A) (B) (C)
FIG.404.2.5
TWO DOORS IN A SERIES

Section 405 - Ramps

405.1 GENERAL

RAMPS ALONG ACCESSIBLE ROUTES SHALL BE COMPLY WITH SECTION 405.

405.2 SLOPE

RAMP RUN SHALL HAVE A RUNNING SLOPE GREATER THAN 1:20 AND NOT STEEPER THAN 1:12.

405.5 CLEAR WIDTH

THE CLEAR WIDTH OF A RAMP RUN SHALL BE 36" INCHES (915 MM) MINIMUM. HANDRAILS AND HANDRAIL SUPPORTS THAT ARE PROVIDED ON THE RAMP RUN SHALL NOT PROJECT INTO THE REQUIRED CLEAR WIDTH OF THE RAMP RUN.

405.6 RISE

THE RISE FOR ANY RAMP RUN SHALL BE 30" INCHES (760 MM) MAXIMUM.

405.7 LANDING

RAMPS SHALL HAVE LANDINGS AT THE BOTTOM AND TOP OF EACH RAMP RUN. LANDINGS SHALL COMPLY WITH SECTION 405.7.

405.7.1 SLOPE

LANDINGS SHALL HAVE A SLOPE NOT STEEPER THAN 1:48 AND SHALL COMPLY WITH SECTION 302.

405.7.2 WIDTH

CLEAR WIDTH OF LANDINGS SHALL BE AT LEAST AS WIDE AS THE WIDEST RAMP RUN LEADING TO THE LANDING.

405.7.3 LENGTH

LANDINGS SHALL HAVE A CLEAR LENGTH OF 60" INCHES (1525 MM) MINIMUM.

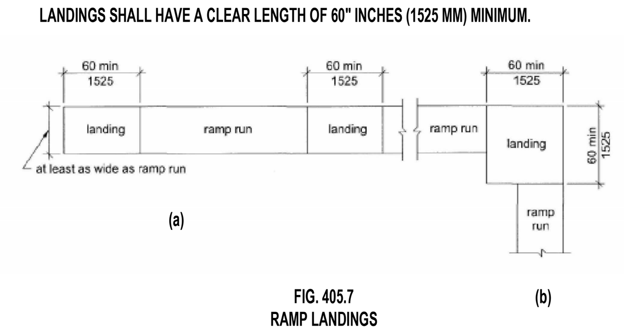

(a) (b)
FIG. 405.7
RAMP LANDINGS

405.7.4 CHANGE IN DIRECTION

RAMPS THAT CHANGE DIRECTION AT RAMP LANDINGS SHALL BE SIZED TO PROVIDE A TURNING SPACE COMPLYING WITH SECTION 304.3.

405.7.5 DOORWAYS

WHERE DOORWAYS ARE ADJACENT TO A RAMP LANDING, MANEUVERING CLEARANCES REQUIRED BY SECTIONS 404.2.3 AND 404.3.2 SHALL BE PERMITTED TO OVERLAP THE LANDING AREA. WHERE A DOOR THAT IS SUBJECT TO LOCKING IS LOCATED ADJACENT TO A RAMP LANDING, THE LANDING SHALL BE SIZED TO PROVIDE A TURNING SPACE COMPLYING WITH SECTION 304.3.

405.8 HANDRAILS

RAMPS RUNS WITH A RISE GREATER THAN 6 INCHES (150 MM) SHALL HAVE HANDRAILS COMPLYING WITH SECTION 505.

SECTION 406- Curb Ramps

406.1 GENERAL

CURB RAMPS ON ACCESSIBLE ROUTES SHALL COMPLY WITH SECTIONS 406, 405.2, 405.3 AND 405.10.

406.2 COUNTER SLOPE

COUNTER SLOPES OF ADJOINING GUTTERS AND ROAD SURFACES IMMEDIATELY ADJACENT TO THE CURB RAMP SHALL NOT BE STEEPER THAN 1:20. THE ADJACENT SURFACES AT TRANSITIONS AT CURB RAMPS TO WALKS, GUTTERS AND STREETS SHALL BE AT THE SAME LEVEL.

406.4 WIDTH

CURB RAMP SHALL BE 36 INCHES (915 MM) MINIMUM IN WIDTH, EXCLUSIVE OF FLARED SIDES.

406.6 LOCATION

CURB RAMPS AND THE FLARED SIDES OF CURB RAMPS SHALL BE LOCATED SO THEY DO NOT PROJECT INTO VEHICULAR TRAFFIC LANES, PARKING SPACES OR PARKING ACCESS AISLES. CURB RAMPS AT MARKED CROSSINGS SHALL BE WHOLLY CONTAINED WITHIN THE MARKINGS, EXCLUDING ANY FLARED SIDES.

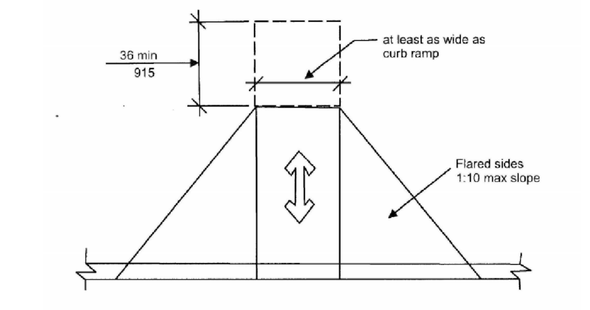

FIG. 406.7
LANDINGS

SECTION 407- Elevators

407.1 GENERAL

ELEVATORS SHALL COMPLY WITH SECTION 407 AND ASME A17.1/CSA B44 LISTED IN SECTION 105.2.5. ELEVATORS SHALL BE PASSENGER ELEVATORS AS CLASSIFIED BY ASME A17.1/CSA B44. ELEVATOR OPERATION SHALL BE AUTOMATIC.

407.2 ELEVATOR LANDING REQUIREMENTS

ELEVATOR LANDINGS SHALL COMPLY WITH SECTION 407.2.

407.2.1 CALL CONTROL

WHERE ELEVATOR CALL BUTTONS OR KEYPADS ARE PROVIDED, THEY SHALL COMPLY WITH SECTIONS 407.2.1 AND 309.4. CALL BUTTONS SHALL BE RAISED OR FLUSH. OBJECTS BENEATH HALL CALL BUTTONS SHALL PROTRUDE 1" INCH (25 MM) MAXIMUM.

EXCEPTION:

1. EXISTING ELEVATORS SHALL BE PERMITTED TO HAVE RECESSED CALL BUTTONS.
2. THE RESTRICTION ON OBJECTS BENEATH CALL BUTTONS SHALL NOT APPLY TO EXISTING CALL BUTTONS.

407.2.1.1 HEIGHT

CALL BUTTONS AND KEYPADS SHALL BE LOCATED WITHIN ONE OF THE REACH RANGES SPECIFIED IN SECTION 308, MEASURED TO THE CENTERLINE OF THE HIGHEST OPERABLE PART.

EXCEPTION:

EXISTING CALL BUTTONS AND EXISTING KEYPADS SHALL BE PERMITTED TO BE LOCATED 54 INCHES (1370 MM) MAXIMUM ABOVE THE FLOOR MEASURED TO THE CENTERLINE OF THE HIGHEST OPERABLE PART.

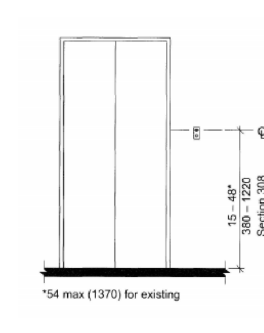

FIG. 407.2.1.1
HEIGHT OF ELEVATOR CALL BUTTONS

407.2.2 HALL SIGNALS

HALL SIGNALS, INCLUDING IN-CAR SIGNALS, SHALL COMPLY WITH SECTION 407.2.2

407.2.2.1 VISIBLE AND AUDIBLE SIGNALS

A VISIBLE AND AUDIBLE SIGNAL SHALL BE PROVIDED AT EACH HOISTWAY ENTRANCE TO INDICATE WHICH CAR IS ANSWERING A CALL AND THE CAR'S DIRECTION OF TRAVEL. WHERE IN-CAR SIGNALS ARE PROVIDED THEY SHALL BE VISIBLE FROM THE FLOOR AREA ADJACENT TO THE HALL CALL BUTTONS.

407.2.2.2 VISIBLE SIGNALS

VISIBLE SIGNAL FIXTURES SHALL BE CENTERED AT 72" INCHES (1830 MM) MINIMUM ABOVE THE FLOOR. THE VISIBLE SIGNAL ELEMENTS SHALL BE 2-1/2" INCHES (64 MM) MINIMUM BETWEEN THE UPPERMOST AND LOWEST EDGES OF THE ILLUMINATED SHAPE MEASURED VERTICALLY. SIGNALS SHALL BE VISIBLE FROM THE FLOOR AREA ADJACENT TO THE HALL CALL BUTTON.

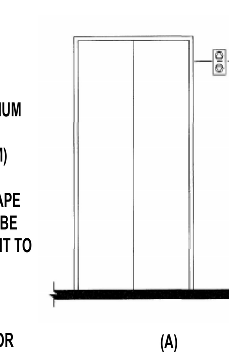

(A)

407.2.2.3 AUDIBLE SIGNALS

AUDIBLE SIGNALS SHALL SOUND ONCE FOR THE UP DIRECTION AND TWICE FOR THE DOWN DIRECTION, OR SHALL HAVE VERBAL ENUNCIATORS THAT INDICATE THE DIRECTION OF ELEVATOR CAR TRAVEL. AUDIBLE SIGNALS SHALL HAVE A FREQUENCY OF 1500 HZ MAXIMUM.

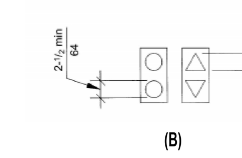

(B)
FIG. 407.2.2.2
ELEVATOR VISIBLE SIGNALS

407.2.3 HOISTWAY SIGNS

SIGNS AT ELEVATOR HOISTWAYS SHALL COMPLY WITH SECTION 407.2.3.

407.2.3.1 FLOOR DESIGNATION

FLOOR DESIGNATIONS SHALL BE PROVIDED IN RAISED CHARACTERS AND BRAILLE COMPLYING WITH SECTIONS 703.3 AND 703.4. RAISED CHARACTERS SHALL BE 2" INCHES (51 MM) MINIMUM IN HEIGHT. FLOOR DESIGNATIONS SHALL BE LOCATED ON BOTH JAMBS OR ELEVATOR HOISTWAY ENTRANCES. A RAISED STAR SHALL BE PROVIDED ON BOTH JAMBS AT THE MAIN ENTRY LEVEL.

407.2.3 HOISTWAY SIGNS

SIGNS AT ELEVATOR HOISTWAYS SHALL COMPLY WITH SECTION 407.2.3.

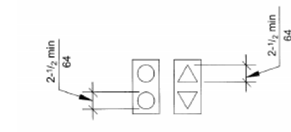

(B)
FIG. 407.2.2.2
ELEVATOR VISIBLE SIGNALS

407.2.3.1 FLOOR DESIGNATION

FLOOR DESIGNATIONS SHALL BE PROVIDED IN RAISED CHARACTERS AND BRAILLE COMPLYING WITH SECTIONS 703.3 AND 703.4. RAISED CHARACTERS SHALL BE 2" INCHES (51 MM) MINIMUM IN HEIGHT. FLOOR DESIGNATIONS SHALL BE LOCATED ON BOTH JAMBS OR ELEVATOR HOISTWAY ENTRANCES. A RAISED STAR SHALL BE PROVIDED ON BOTH JAMBS AT THE MAIN ENTRY LEVEL.

407.2.3.2 CAR IDENTIFICATION

DESTINATION ORIENTED ELEVATORS SHALL PROVIDE CAR IDENTIFICATION IN RAISED CHARACTERS AND BRAILLE COMPLYING WITH SECTIONS 703.3 AND 703.4.

407.2.4 DESTINATION SIGNS

WHERE SIGNS INDICATE THAT ELEVATORS DO NOT SERVE ALL LANDINGS, SIGNS IN RAISED CHARACTERS AND BRAILLE COMPLYING WITH SECTIONS 703.3 AND 703.4 SHALL BE PROVIDED ABOVE THE HALL CALL BUTTON OR KEYPAD.

407.3 ELEVATOR DOOR REQUIREMENTS

HOISTWAY AND ELEVATOR CAR DOORS SHALL COMPLY WITH SECTION 407.3.

407.3.1 TYPE

ELEVATOR DOORS SHALL BE HORIZONTAL SLIDING TYPE. CAR GATES SHALL BE PROHIBITED.

407.3.2 OPERATION

ELEVATOR HOISTWAY AND CAR DOORS SHALL OPEN AND CLOSE AUTOMATICALLY.

407.4 ELEVATOR CAR REQUIREMENTS

ELEVATOR CARS SHALL COMPLY WITH SECTION 407.4.

407.4.1 INSIDE DIMENSIONS

INSIDE DIMENSIONS OF ELEVATOR CARS SHALL COMPLY WITH TABLE 407.4.1.

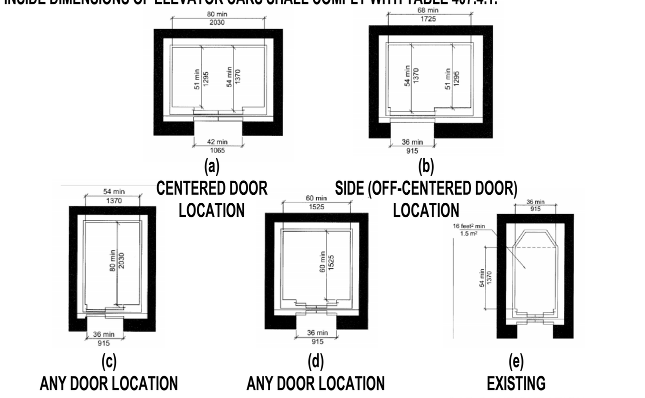

(a) CENTERED DOOR LOCATION (b) SIDE (OFF-CENTERED DOOR) LOCATION
(c) ANY DOOR LOCATION (d) ANY DOOR LOCATION (e) EXISTING CAR CONFIGURATION
FIG. 407.4.1
INSIDE DIMENSIONS OF ELEVATOR CARS

Door Location	Door Clear Opening Width	Inside Car, Side to Side	Inside Car, Back Wall to Front Return	Inside Car, Back Wall to Inside Face
Centered	42 inches (1065 mm)	80 inches (2030 mm)	51 inches (1295 mm)	54 inches (1370 mm)
Side (Off Center)	36 inches (915 mm)[1]	68 inches (1725 mm)	51 inches (1295 mm)	54 inches (1370 mm)
Any	36 inches (915 mm)[1]	54 inches (1370 mm)	80 inches (2030 mm)	80 inches (2030 mm)
Any	36 inches (915 mm)[1]	60 inches (1525 mm)[2]	60 inches (1525 mm)[2]	60 inches (1525 mm)[2]

[1] A tolerance of minus 5/8 inch (16 mm) is permitted.
[2] Other car configurations that provide a 36-inch (915 mm) door clear opening width and a turning space complying with Section 304 with the door closed are permitted.

SECTION 502 - Parking Spaces

502.1 GENERAL

ACCESSIBLE CAR AND VAN PARKING SPACES SHALL COMPLY WITH SECTION 502.

502.2 VEHICLE SPACE SIZE

CAR PARKING SPACES SHALL BE 96" INCHES (2440 MM) MINIMUM IN WIDTH. VAN PARKING SPACES SHALL BE 132" INCHES (3350 MM) MINIMUM IN WIDTH

EXCEPTION:

VAN PARKING SPACES SHALL BE PERMITTED TO BE 96" INCHES (2440 MM) MINIMUM IN WIDTH WHERE THE ADJACENT ACCESS AISLE IS 96" INCHES (2440 MM) MINIMUM IN WIDTH.

502.3 VEHICLE SPACE MARKING

CAR AND VAN PARKING SPACES SHALL BE MARKED TO DEFINE THE WIDTH. WHERE PARKING SPACES ARE MARKED WITH LINES, THE WIDTH MEASUREMENTS OF PARKING SPACES AND ADJACENT ACCESS AISLES SHALL BE MADE FROM THE CENTERLINE OF THE MARKINGS.

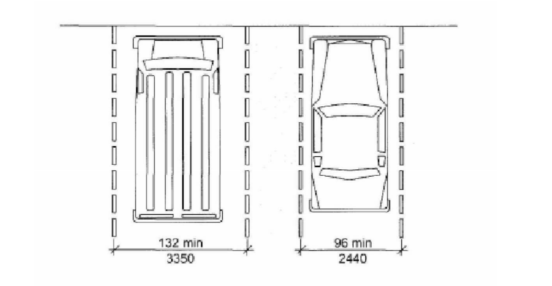

FIG. 502.2
VEHICLE PARKING SPACE SIZE

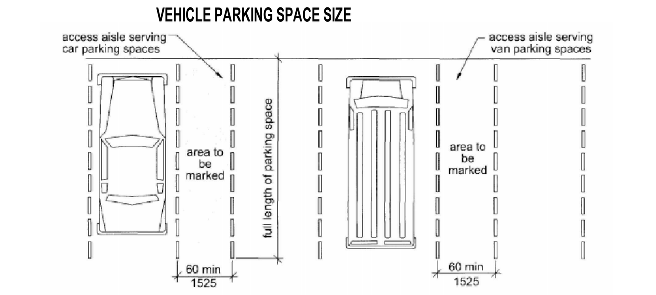

FIG. 502.4
PARKING SPACE ACCESS AISLE

502.4 ACCESS AISLE

CAR AND VAN PARKING SPACES SHALL HAVE AN ADJACENT ACCESS AISLE COMPLYING WITH SECTION 502.4.

502.4.1 LOCATION

ACCESS AISLES SHALL ADJOIN AN ACCESSIBLE ROUTE. TWO PARKING SPACES SHALL BE PERMITTED TO SHARE A COMMON ACCESS AISLE. ACCESS AISLES SHALL NOT OVERLAP WITH THE VEHICULAR WAY. PARKING SPACES SHALL BE PERMITTED TO HAVE ACCESS AISLES PLACED ON WITHER SIDE OF THE CAR OR VAN PARKING SPACE. VAN PARKING SPACES THAT ARE ANGLED SHALL HAVE ACCESS AISLES LOCATED ON THE PASSENGER SIDE OF THE PARKING SPACE.

502.4.2 WIDTH

ACCESS AISLES SERVING CAR AND VAN PARKING SPACES SHALL BE 60" INCHES (1525 MM) MINIMUM IN WIDTH.

502.4.3 LENGTH

ACCESS AISLES SHALL EXTEND THE FULL LENGTH OF TH3 PARKING SPACES THEY SERVE.

502.4.4 MARKING

ACCESS AISLES SHALL BE MARKED SO AS TO DISCOURAGE PARKING IN THEM. WHERE ACCESS AISLES ARE MARKED WITH LINES, THE WIDTH MEASUREMENTS OF ACCESS AISLES AND ADJACENT PARKING SPACES SHALL BE MADE FROM THE CENTERLINE OF THE MARKINGS.

SECTION 504 - Stairways

504.1 GENERAL

ACCESSIBLE STAIRS SHALL COMPLY WITH SECTION 504.

504.2 TREADS AND RISERS

ALL STEPS ON A FLIGHT OF STAIRS SHALL HAVE UNIFORM RISER HEIGHT AND UNIFORM TREAD DEPTH. RISER SHALL BE 4" INCHES (100 MM) MINIMUM AND 7" INCHES (180 MM) MAXIMUM IN HEIGHT. TREADS SHALL BE 11" INCHES (280 MM) MINIMUM IN DEPTH.

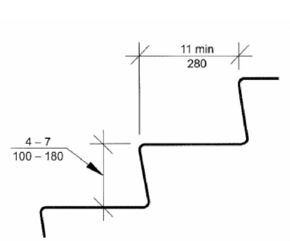

FIG. 504.2
TREADS AND RISERS FOR ACCESSIBLE STAIRWAYS

504.3 OPEN RISERS

OPEN RISERS SHALL NOT BE PERMITTED.

504.4 TREAD SURFACE

STAIR TREADS SHALL COMPLY WITH SECTION 302 AND SHALL HAVE A SLOPE NOT STEEPER THAN 1:48.

504.5 NOSINGS

THE RADIUS OF CURVATURE AT THE LEADING EDGE OF THE TREAD SHALL BE 1/2" INCH (13 MM) MAXIMUM. NOSINGS THAT PROJECT BEYOND RISERS SHALL HAVE THE UNDERSIDE OF THE LEADING EDGE CURVED OR BEVELED. RISERS SHALL BE PERMITTED TO SLOPE UNDER THE TREAD AT AN ANGLE OF 30 DEGREES MAXIMUM FROM VERTICAL. THE PERMITTED PROJECTION OF THE NOSING SHALL BE 1-1/2" INCHES (38 MM) MAXIMUM OVER THE TREAD OR FLOOR BELOW.

504.6 HANDRAILS

STAIRS SHALL HAVE HANDRAILS COMPLYING WITH SECTION 505.

504.7 WET CONDITIONS

STAIR TREAD AND LANDINGS SUBJECT TO WET CONDITIONS SHALL BE DESIGNED TO PREVENT THE ACCUMULATION OF WATER.

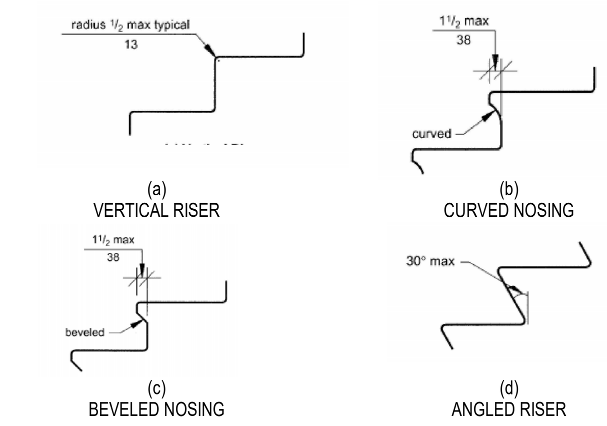

(a) VERTICAL RISER (b) CURVED NOSING
(c) BEVELED NOSING (d) ANGLED RISER
FIG. 504.5
STAIR NOSINGS

Section 505-Handrails

505.1 GENERAL

HANDRAILS REQUIRED BY SECTION 405.8 FOR RAMPS OR SECTION 504.6 FOR STAIRS, SHALL COMPLY WITH SECTION 505.

505.2 LOCATION

HANDRAILS SHALL BE PROVIDED ON BOTH SIDES OF STAIRS AND RAMPS.

EXCEPTION:

1. IN ASSEMBLY SEATING AREAS,HANDRAILS SHALL NOT BE REQUIRED ON BOTH SIDES ALONG AISLE STAIRS, PROVIDED WITH A HANDRAIL EITHER AT THE SIDE OR WITHIN THE AISLE.
2. IN ASSEMBLY SEATING AREAS, HANDRAILS SHALL NOT BE REQUIRED ON THE SIDES OF RAMPED AISLES SERVING SEATS.

505.3 CONTINUITY

HANDRAILS SHALL BE CONTINUOUS WITHIN THE FULL LENGTH OF EACH STAIR FLIGHT OR RAMP RUN. INSIDE HANDRAILS ON SWITCH BACK OR DOGLEG STAIRS OR RAMPS SHALL BE CONTINUOUS BETWEEN FLIGHTS OR RUNS. OTHER HANDRAILS SHALL COMPLY WITH SECTIONS 505.10 AND 307.

505.4 HEIGHT

TOP OF GRIPPING SURFACES OF HANDRAILS SHALL BE 34 INCHES (865 MM) MINIMUM AND 38 INCHES (965 MM) MAXIMUM VERTICALLY ABOVE STAIR NOSINGS AND RAMP SURFACES AND WALKING SURFACE. HANDRAILS SHALL BE AT A CONSISTENT HEIGHT ABOVE STAIR NOSINGS, RAMP SURFACES AND WALKING SURFACES.

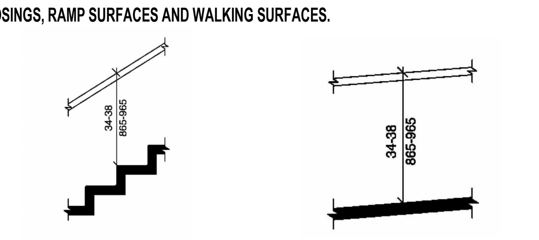

(A) STAIRS (B) RAMPS
FIG. 505.4
HANDRAIL HEIGHT

505.5 CLEARANCE

CLEARANCE BETWEEN HANDRAIL GRIPPING SURFACE AND ADJACENT SURFACE WALL SHALL BE 1½ INCHES (38 MM) MINIMUM.

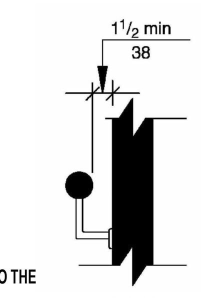

FIG. 505.5
HANDRAIL CLEARANCE

505.6 GRIPPING SURFACE

GRIPPING SURFACES SHALL BE CONTINUOUS, WITHOUT INTERRUPTION BY NEWEL POSTS, OTHER CONSTRUCTION ELEMENTS, OR OBSTRUCTIONS.

EXCEPTION:

1. HANDRAIL BRACKETS OR BALUSTERS ATTACHED TO THE BOTTOM SURFACE OF THE HANDRAIL SHALL NOT BE CONSIDERED OBSTRUCTIONS, PROVIDED THEY COMPLY WITH THE FOLLOWING CRITERIA:

A) NOT MORE THAN 20 PERCENT OF THE HANDRAIL LENGTH IS OBSTRUCTED,
B) HORIZONTAL PROJECTIONS BEYOND THE SIDES OF THE HANDRAIL OCCUR 1-1/2" INCHES (38 MM) MINIMUM BELOW THE BOTTOM OF THE HANDRAIL AND PROVIDED THAT FOR EACH 1/2" INCH (13 MM) OF ADDITIONAL HANDRAIL PERIMETER DIMENSION ABOVE 4 INCHES (100 MM), THE VERTICAL CLEARANCE DIMENSION OF 1-1/2" INCH (38 MM) CAN BE REDUCED BY 1/8" INCH (3.2 MM), AND
C) EDGES SHALL BE ROUNDED.

505.7 CROSS SECTION

HANDRAILS SHALL HAVE A CROSS SECTION COMPLYING WITH SECTION 505.7.1 OR 505.7.2.

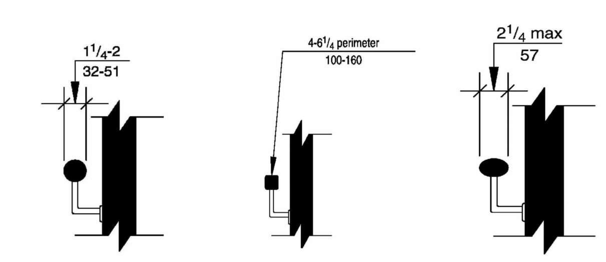

(A) CIRCULAR (B) NON-CIRCULAR (C) CIRCULAR NON-CIRCULAR
FIG. 505.7
HANDRAIL CROSS SECTION

505.7.1 CIRCULAR CROSS SECTIONS

HANDRAILS WITH A CIRCULAR CROSS SECTION SHALL HAVE AN OUTSIDE DIAMETER OF 1-1/4" INCHES (32 MM) MINIMUM AND 2 INCHES (51 MM) MAXIMUM.

505.7.2 NONCIRCULAR CROSS SECTIONS

HANDRAILS WITH A NONCIRCULAR CROSS SECTION SHALL HAVE A PERIMETER DIMENSION OF 4 INCHES (100 MM) MINIMUM AND 6-1/4" INCHES (160 MM) MAXIMUM, AND A CROSS-SECTION DIMENSION OF 2-1/4" INCHES (57 MM) MAXIMUM.

505.8 SURFACES

HANDRAILS, AND ANY WALL OR OTHER SURFACES ADJACENT TO THEM, SHALL BE FREE OF ANY SHARP OR ABRASIVE ELEMENTS. EDGES SHALL BE ROUNDED.

505.9 FITTING

HANDRAILS SHALL NOT ROTATE WITHIN THEIR FITTINGS.

505.10 HANDRAIL EXTENSIONS

HANDRAILS SHALL EXTEND BEYOND AND IN THE SAME DIRECTION OF STAIR FLIGHTS AND RAMP RUNS IN ACCORDANCE WITH SECTION 505.10.

EXCEPTION:

1. CONTINUOUS HANDRAILS AT THE INSIDE TURN OF STAIRS AND RAMPS.
2. EXTENSIONS ARE NOT REQUIRED FOR HANDRAILS IN AISLES SERVING SEATING WHERE THE HANDRAILS ARE DISCONTINUOUS TO PROVIDE ACCESS TO SEATING AND TO PERMIT CROSSOVERS WITHIN THE AISLE.

505.10.1 TOP AND BOTTOM EXTENSION AT RAMPS

RAMP HANDRAILS SHALL EXTEND HORIZONTALLY ABOVE THE LANDING 12" INCHES (305 MM) MINIMUM BEYOND THE TOP AND BOTTOM OF RAMP RUNS. EXTENSION SHALL RETURN TO A WALL, GUARD, OR FLOOR, OR SHALL BE CONTINUOUS TO THE HANDRAIL OF AN ADJACENT RAMP RUN.

505.10.2 TOP EXTENSION AT STAIRS

AT THE TOP OF A STAIR FLIGHT, HANDRAILS SHALL EXTEND HORIZONTALLY ABOVE THE LANDING FOR 12" INCHES (305 MM) MINIMUM BEGINNING DIRECTLY ABOVE THE LANDING NOSING. EXTENSIONS SHALL RETURN TO A WALL, GUARD, OR THE LANDING SURFACE, OR SHALL BE CONTINUOUS TO THE HANDRAIL OF AN ADJACENT STAIR FLIGHT.

505.10.3 BOTTOM EXTENSION AT STAIRS

AT THE BOTTOM OF A STAIR FLIGHT, HANDRAILS SHALL EXTEND AT THE SLOPE OF THE STAIR FLIGHT FOR A HORIZONTAL DISTANCE EQUAL TO ONE TREAD DEPTH BEYOND THE BOTTOM TREAD NOSING. EXTENSIONS SHALL RETURN TO A WALL, GUARD, OR THE LANDING SURFACE, OR SHALL BE CONTINUOUS TO THE HANDRAIL OF AN ADJACENT STAIR FLIGHT.

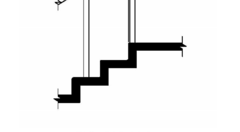

FIG. 505.10.2
TOP HANDRAIL EXTENSION AT STAIRS

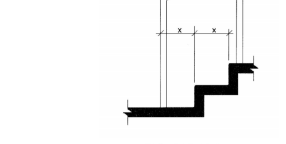

FIG. 505.10.3
BOTTOM HANDRAIL EXTENSION AT STAIRS

H2M architects + engineers

538 Broad Hollow Road, 4th Floor East
Melville, NY 11747
631.756.8000 ▪ www.h2m.com
Architecture & Landscape Architecture: No Certificate Required
Engineering Certificate of Authorization No.: 0018178

CONSULTANTS:

MARK	DATE	DESCRIPTION

REGISTERED ARCHITECT KEVIN MICHAEL MEDLER 038379 STATE OF NEW YORK

07/31/2024
Exp. Date

KEVIN M. MEDLER, R.A.
NY PROFESSIONAL ARCHITECT Lic. No. 038379

"ALTERATION OF THIS DOCUMENT EXCEPT BY A LICENSED PROFESSIONAL IS ILLEGAL"

DESIGNED BY:	DRAWN BY:	CHECKED BY:	REVIEWED BY:
CWP	DOD/NPO	CWP/KMM	

PROJECT No:	DATE:	SCALE:
WPSD 2203	MARCH 2025	AS SHOWN

CLIENT

WHITE PLAINS CITY SCHOOL DISTRICT

White Plains Public Schools
WP
REAL LIFE LEARNING

ADDITION AT WHITE PLAINS HIGH SCHOOL

550 NORTH STREET, WHITE PLAINS, NY 10605

66-22-00-01-0-016-030

CONTRACT

ALL CONTRACTS

STATUS

FINAL BID SET

SHEET TITLE

GENERAL ACCESSIBILITY REQUIREMENTS

DRAWING No.

G 120.00

C:\Users\ddesouza\Documents\WPSD2203_Central21_A_DDeSouzaD8TU8.rvt

3/6/2025 2:53:35 PM

SECTION 603-TOILET AND BATHING ROOMS

603.1 GENERAL

ACCESSIBLE TOILET AND BATHING ROOMS SHALL COMPLY WITH SECTION 603.

603.2 CLEARANCES

603.2.1 TURNING SPACE

A WHEELCHAIR TURNING SPACE COMPLYING WITH SECTION 304 SHALL BE PROVIDED WITHIN THE ROOM. THE REQUIRED TURNING SPACE SHALL NOT BE PROVIDED WITHIN A TOILET COMPARTMENT

603.2.2 DOOR SWING

CLEAR FLOOR OR GROUND SPACES, CLEARANCES AT FIXTURES, AND WHEELCHAIR TURNING SPACES SHALL NOT BE PERMITTED TO OVERLAP.

EXCEPTION:

1. DOORS TO A TOILET OR BATHING ROOM FOR A SINGLE OCCUPANT, ACCESSED ONLY THROUGH A PRIVATE OFFICE AND NOT FOR COMMON USE OR PUBLIC USE SHALL BE PERMITTED TO SWING INTO THE CLEAR FLOOR SPACE, PROVIDED THE SWING OF THE DOOR CAN BE REVERSED TO COMPLY WITH SECTION 603.2.2.
2. WHERE THE ROOM IS FOR INDIVIDUAL USE AND A CLEAR FLOOR OR GROUND SPACE COMPLYING WITH SECTION 305.3 IS PROVIDED WITHIN THE ROOM, BEYOND THE ARC OF THE DOOR SWING, THE DOOR SHALL NOT BE REQUIRED TO COMPLY WITH SECTION 603.2.2.

603.3 MIRRORS

WHERE MIRRORS ARE LOCATED ABOVE LAVATORIES, A MIRROR SHALL BE LOCATED OVER THE ACCESSIBLE LAVATORY AND SHALL BE MOUNTED WITH THE BOTTOM EDGE OF THE REFLECTING SURFACE 40" INCHES (1015 MM) MAXIMUM ABOVE THE FLOOR. WHERE MIRRORS ARE LOCATED ABOVE COUNTERS THAT DO NOT CONTAIN LAVATORIES, THE MIRROR SHALL BE MOUNTED WITH THE BOTTOM EDGE OF THE REFLECTING SURFACE 40" INCHES (1015 MM) MAXIMUM ABOVE THE FLOOR.

603.4 COAT HOOKS AND SHELVES

COAT HOOKS SHALL BE LOCATED WITHIN ONE OF THE REACH RANGES SPECIFIED IN SECTION 308. SHELVES SHALL BE 40" INCHES (1015 MM) MINIMUM AND 48" INCHES (1220 MM) MAXIMUM ABOVE THE FLOOR.

SECTION 604- Water Closets and Toilet Compartments

604.1 GENERAL

ACCESSIBLE WATER CLOSETS AND TOILET COMPARTMENTS SHALL COMPLY WITH SECTION 604. COMPARTMENTS CONTAINING MORE THAN ONE PLUMBING FIXTURE SHALL COMPLY WITH SECTION 603. WHEELCHAIR ACCESSIBLE COMPARTMENTS SHALL COMPLY WITH SECTION 604.9. AMBULATORY ACCESSIBLE COMPARTMENTS SHALL COMPLY WITH SECTION 604.10.

604.2 LOCATION

THE WATER CLOSET SHALL BE LOCATED WITH A WALL OR PARTITION TO THE REAR AND TO ONE SIDE. THE CENTERLINE OF THE WATER CLOSET SHALL BE 16" INCHES (405 MM) MINIMUM TO 18" INCHES (455 MM) MAXIMUM FROM THE SIDE WALL OR PARTITION. WATER CLOSETS LOCATED IN AMBULATORY ACCESSIBLE COMPARTMENTS SPECIFIED IN SECTION 604.10 SHALL HAVE THE CENTERLINE OF THE WATER CLOSET 17" INCHES (430 MM) MINIMUM TO 19" INCHES (485 MM) MAXIMUM FROM THE SIDE WALL OR PARTITION.

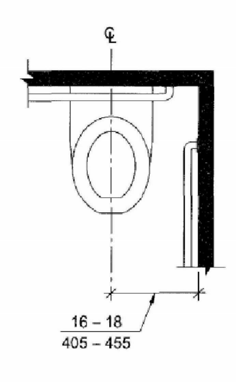

(a)
ACCESSIBLE WATER CLOSETS

604.3.1 CLEARANCE WIDTH

CLEARANCE AROUND A WATER CLOSET SHALL BE 60" INCHES (1525 MM) MINIMUM IN WIDTH, MEASURED PERPENDICULAR FROM THE SIDEWALL.

604.3.2 CLEARANCE DEPTH

CLEARANCE AROUND THE WATER CLOSET SHALL BE 56" INCHES (1420 MM) MINIMUM IN DEPTH, MEASURED PERPENDICULAR FROM THE REAR WALL.

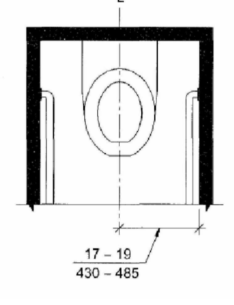

(b)
ACCESSIBLE WATER CLOSETS

FIG. 604.2
WATER CLOSET LOCATION

604.3.3 CLEARANCE OVERLAP

THE REQUIRED CLEARANCE AROUND THE WATER CLOSET SHALL BE PERMITTED TO OVERLAP THE WATER CLOSET, ASSOCIATED GRAB BARS, PAPER DISPENSERS, SANITARY NAPKIN RECEPTACLES, COAT HOOKS, SHELVES, ACCESSIBLE ROUTES, CLEAR FLOOR SPACE AT OTHER FIXTURES AND THE TURNING SPACE. NO OTHER FIXTURES OR OBSTRUCTIONS SHALL BE WITHIN THE REQUIRED WATER CLOSET CLEARANCE.

604.4 HEIGHT

THE HEIGHT OF WATER CLOSET SEATS SHALL BE 17" INCHES (430 MM) MINIMUM AND 19" INCHES (485 MM) MAXIMUM ABOVE THE FLOOR, MEASURED TO THE TOP OF THE SEAT. SEATS SHALL NOT BE SPRUNG TO RETURN TO A LIFTED POSITION.

604.5 GRAB BARS

GRAB BARS FOR WATER CLOSETS SHALL COMPLY WITH SECTION 609 AND SHALL BE PROVIDED IN ACCORDANCE WITH SECTIONS 604.5.1 AND 604.5.2. GRAB BARS SHALL BE PROVIDED ON THE REAR WALL AND ON THE SIDE WALL CLOSEST TO THE WATER CLOSET.

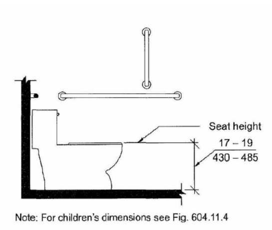

FIG. 604.4
WATER CLOSET SEAT HEIGHT

EXCEPTION:

GRAB BARS ARE NOT REQUIRED TO BE INSTALLED IN A TOILET ROOM FOR A SINGLE OCCUPANT, ACCESSED ONLY THROUGH A PRIVATE OFFICE AND NOT FOR COMMON USE OR PUBLIC USE, PROVIDED REINFORCEMENT HAS BEEN INSTALLED IN WALLS AND LOCATED SO AS TO PERMIT THE INSTALLATION OF GRAB BARS COMPLYING WITH SECTION 604.5

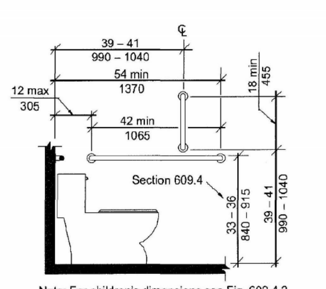

FIG. 604.5.1
SIDE WALL GRAB BAR FOR WATER CLOSET

604.4.5.1 FIXED SIDE WALL GRAB BARS

FIXED SIDEWALK GRAB BARS SHALL BE 42" INCHES (1065 MM) MINIMUM IN LENGTH, LOCATED 12" INCHES (305 MM) MAXIMUM FROM THE REAR WALL AND EXTENDING 54" INCHES (1370 MM) MINIMUM FROM THE REAR WALL. IN ADDITION, A VERTICAL GRAB BAR 18" INCHES (455 MM) MINIMUM IN LENGTH SHALL BE MOUNTED WITH THE BOTTOM OF THE BAR LOCATED BETWEEN 39" INCHES (990 MM) AND 41" INCHES (1040 MM) ABOVE THE FLOOR, AND WITH THE CENTER LINE OF THE BAR LOCATED BETWEEN 39" INCHES (990 MM) AND 41" INCHES (1040 MM) FROM THE REAR WALL.

604.4.5.2 REAR WALL GRAB BAR

THE REAR WALL GRAB SHALL BE 36" INCHES (915 MM) MINIMUM IN LENGTH, AND EXTEND FROM THE CENTERLINE OF THE WATER CLOSET 12" INCHES (305 MM) MINIMUM ON THE SIDE CLOSEST TO THE WALL, AND 24" INCHES (610 MM) MINIMUM ON THE TRANSFER SIDE.

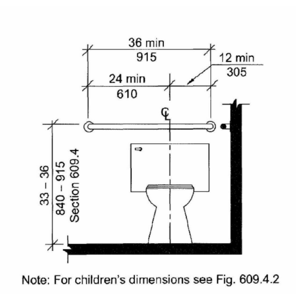

FIG. 604.5.2
REAR WALL GRAB BAR FOR WATER CLOSET

604.6 FLUSH CONTROLS

FLUSH CONTROLS SHALL BE HAND OPERATED OR AUTOMATIC. HAND-OPERATED FLUSH CONTROLS SHALL COMPLY WITH SECTION 309. FLUSH CONTROLS SHALL BE LOCATED ON THE OPEN SIDE OF THE WATER CLOSET.

604.7 DISPENSERS

TOILET PAPER DISPENSERS SHALL COMPLY WITH SECTION 309.4. WHERE THE DISPENSER IS LOCATED ABOVE THE GRAB BAR, THE OUTLET OF THE DISPENSER SHALL BE LOCATED WITHIN AN AREA 24" INCHES MINIMUM AND 36" INCHES MAXIMUM FROM THE REAR WALL. WHERE THE DISPENSER IS LOCATED BELOW THE GRAB BAR, THE OUTLET OF THE DISPENSER SHALL BE LOCATED WITHIN AN AREA 24" INCHES MINIMUM AND 42" INCHES MAXIMUM FROM THE REAR WALL. THE OUTLET OF THE DISPENSER SHALL BE LOCATED 18" INCHES MINIMUM AND 48" INCHES MAXIMUM ABOVE THE FLOOR. DISPENSERS SHALL NOT BE OF A TYPE THAT CONTROL DELIVERY OR DO NOT ALLOW CONTINUOUS PAPER FLOW.

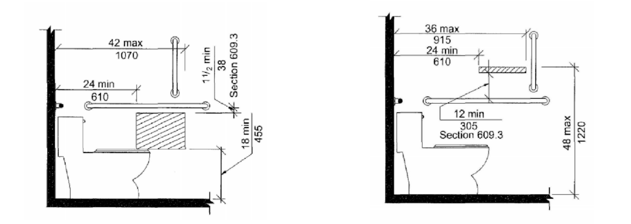

(a)
PROTRUDING DISPENSER BELOW GRAB BAR

(b)
PROTRUDING DISPENSER ABOVE GRAB BAR

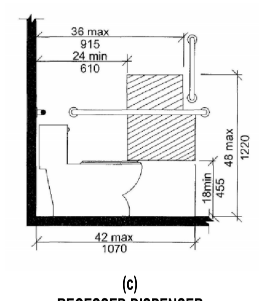

NOTE:
For children's dimensions see Fig. 604.11.7 dispenser outlet location

(c)
RECESSED DISPENSER
FIG. 604.7
DISPENSER OUTLET LOCATION

604.4 HEIGHT

THE HEIGHT OF WATER CLOSET SEATS SHALL BE 17" INCHES (430 MM) MINIMUM AND 19" INCHES (485 MM) MAXIMUM ABOVE THE FLOOR, MEASURED TO THE TOP OF THE SEAT. SEATS SHALL NOT BE SPRUNG TO RETURN TO A LIFTED POSITION.

604.5 GRAB BARS

GRAB BARS FOR WATER CLOSETS SHALL COMPLY WITH SECTION 609 AND SHALL BE PROVIDED IN ACCORDANCE WITH SECTIONS 604.5.1 AND 604.5.2. GRAB BARS SHALL BE PROVIDED ON THE REAR WALL AND ON THE SIDE WALL CLOSEST TO THE WATER CLOSET.

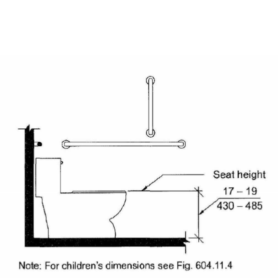

FIG. 604.4
WATER CLOSET SEAT HEIGHT

EXCEPTION:

GRAB BARS ARE NOT REQUIRED TO BE INSTALLED IN A TOILET ROOM FOR A SINGLE OCCUPANT, ACCESSED ONLY THROUGH A PRIVATE OFFICE AND NOT FOR COMMON USE OR PUBLIC USE, PROVIDED REINFORCEMENT HAS BEEN INSTALLED IN WALLS AND LOCATED SO AS TO PERMIT THE INSTALLATION OF GRAB BARS COMPLYING WITH SECTION 604.5

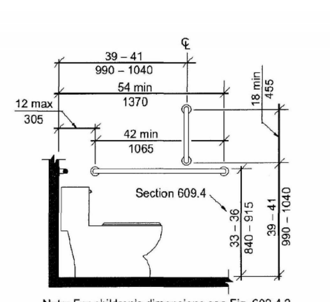

FIG. 604.5.1
SIDE WALL GRAB BAR FOR WATER CLOSET

604.4.5.1 FIXED SIDE WALL GRAB BARS

FIXED SIDEWALK GRAB BARS SHALL BE 42" INCHES (1065 MM) MINIMUM IN LENGTH, LOCATED 12" INCHES (305 MM) MAXIMUM FROM THE REAR WALL AND EXTENDING 54" INCHES (1370 MM) MINIMUM FROM THE REAR WALL. IN ADDITION, A VERTICAL GRAB BAR 18" INCHES (455 MM) MINIMUM IN LENGTH SHALL BE MOUNTED WITH THE BOTTOM OF THE BAR LOCATED BETWEEN 39" INCHES (990 MM) AND 41" INCHES (1040 MM) ABOVE THE FLOOR, AND WITH THE CENTER LINE OF THE BAR LOCATED BETWEEN 39" INCHES (990 MM) AND 41" INCHES (1040 MM) FROM THE REAR WALL.

604.4.5.2 REAR WALL GRAB BAR

THE REAR WALL GRAB SHALL BE 36" INCHES (915 MM) MINIMUM IN LENGTH, AND EXTEND FROM THE CENTERLINE OF THE WATER CLOSET 12" INCHES (305 MM) MINIMUM ON THE SIDE CLOSEST TO THE WALL, AND 24" INCHES (610 MM) MINIMUM ON THE TRANSFER SIDE.

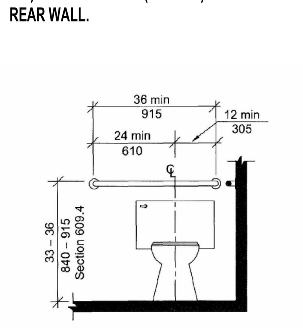

FIG. 604.5.2
REAR WALL GRAB BAR FOR WATER CLOSET

604.6 FLUSH CONTROLS

FLUSH CONTROLS SHALL BE HAND OPERATED OR AUTOMATIC. HAND-OPERATED FLUSH CONTROLS SHALL COMPLY WITH SECTION 309. FLUSH CONTROLS SHALL BE LOCATED ON THE OPEN SIDE OF THE WATER CLOSET.

604.7 DISPENSERS

TOILET PAPER DISPENSERS SHALL COMPLY WITH SECTION 309.4. WHERE THE DISPENSER IS LOCATED ABOVE THE GRAB BAR, THE OUTLET OF THE DISPENSER SHALL BE LOCATED WITHIN AN AREA 24" INCHES MINIMUM AND 36" INCHES MAXIMUM FROM THE REAR WALL. WHERE THE DISPENSER IS LOCATED BELOW THE GRAB BAR, THE OUTLET OF THE DISPENSER SHALL BE LOCATED WITHIN AN AREA 24" INCHES MINIMUM AND 42" INCHES MAXIMUM FROM THE REAR WALL. THE OUTLET OF THE DISPENSER SHALL BE LOCATED 18" INCHES MINIMUM AND 48" INCHES MAXIMUM ABOVE THE FLOOR. DISPENSERS SHALL NOT BE OF A TYPE THAT CONTROL DELIVERY OR DO NOT ALLOW CONTINUOUS PAPER FLOW.

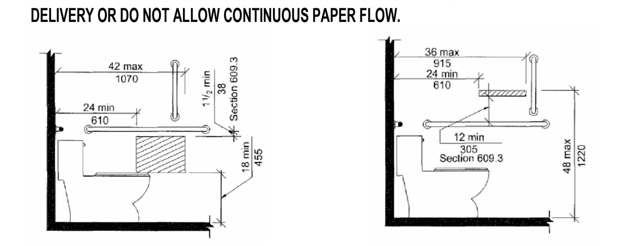

(a)
PROTRUDING DISPENSER BELOW GRAB BAR

(b)
PROTRUDING DISPENSER ABOVE GRAB BAR

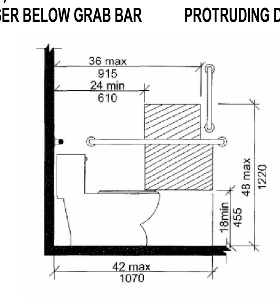

NOTE:
For children's dimensions see Fig. 604.11.7 dispenser outlet location

(c)
RECESSED DISPENSER
FIG. 604.7
DISPENSER OUTLET LOCATION

604.8 COAT HOOKS AND SHELVES

COAT HOOKS PROVIDED WITHIN TOILET COMPARTMENTS SHALL BE 48" INCHES (1220 MM) MAXIMUM ABOVE THE FLOOR. SHELVES SHALL BE 40" INCHES (1015 MM) MINIMUM AND 48" INCHES (1220 MM) MAXIMUM ABOVE THE FLOOR.

604.9 WHEELCHAIR ACCESSIBLE COMPARTMENT

ACCESSIBLE TOILET AND BATHING ROOMS SHALL COMPLY WITH SECTION 603.

604.9.2 SIZE

TOILET COMPARTMENTS SHALL COMPLY WITH SECTION 604.9.2.1 OR 604.9.2.2 AS APPLICABLE.

604.9.2.1 MINIMUM AREA

THE MINIMUM AREA OF A WHEELCHAIR ACCESSIBLE COMPARTMENT SHALL BE 60" INCHES (1525 MM) MINIMUM IN WIDTH MEASURED PERPENDICULAR TO THE SIDE WALL AND 56" INCHES (1420 MM) MINIMUM IN DEPTH FOR WALL HUNG WATER CLOSETS AND 59" (1500 MM) MINIMUM IN DEPTH FOR FLOOR MOUNTED WATER CLOSETS MEASURED PERPENDICULAR TO THE REAR WALL.

604.9.2.2 COMPARTMENT FOR CHILDREN'S USE

THE MINIMUM AREA OF A WHEELCHAIR ACCESSIBLE COMPARTMENT PRIMARILY FOR CHILDREN'S USE SHALL BE 60" INCHES (1525 MM) MINIMUM IN WIDTH MEASURED PERPENDICULAR TO THE SIDE WALL, AND 59" INCHES (1500 MM) MINIMUM IN DEPTH FOR WALL HUNG AND FLOOR MOUNTED WATER CLOSERS MEASURED PERPENDICULAR TO THE REAR WALL.

604.9.2.3 DOORS

TOILET COMPARTMENT DOORS SHALL BE 42" INCHES (1065 MM) MINIMUM FOR DOOR CLEARANCE BETWEEN THE DOOR SIDE OF THE STALL AND ANY OBSTRUCTIONS. THE DOOR SHALL BE SELF-CLOSING. AND SHALL NOT SWING INTO THE REQUIRED MINIMUM AREA.

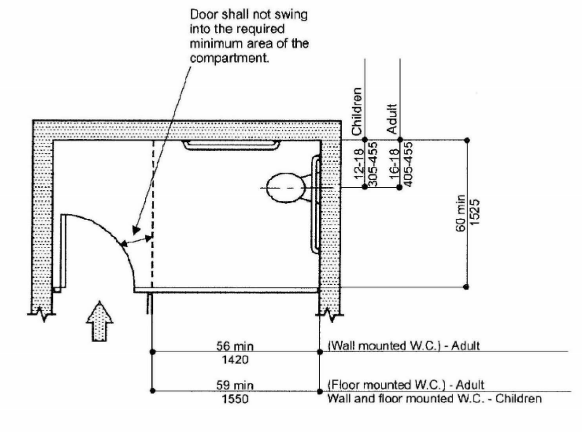

FIG. 604.9.3.1 (c)
WHEELCHAIR ACCESSIBLE COMPARTMENT DOOR OPENINGS - ALTERNATE

604.9.3.1 DOOR OPENING LOCATION

THE FARTHEST EDGE OF TOILET COMPARTMENT DOOR OPENING SHALL BE LOCATED IN THE FRONT WALL OR PARTITION OR IN THE SIDE WALL OR PARTITION AS REQUIRED BY TABLE 604.9.3.1

604.9.4 APPROACH

WHEELCHAIR ACCESSIBLE COMPARTMENTS SHALL BE ARRANGED FOR LEFT HAND OR RIGHT-HAND APPROACH TO THE WATER CLOSET.

604.9.6 GRAB BARS

GRAB BARS SHALL COMPLY WITH SECTION 609. SIDE WALL GRAB BARS COMPLYING WITH SECTION 604.5.1 LOCATED ON THE WALL CLOSEST TO THE WATER CLOSET, AND A REAR WALL GRAB BAR COMPLYING WITH SECTION 604.5.2, SHALL BE PROVIDED.

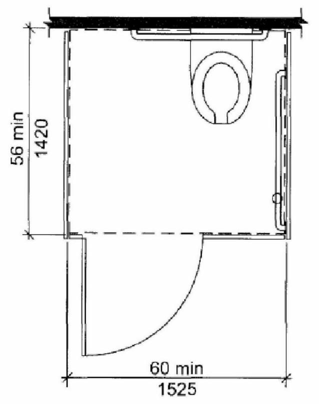

(a)
WALL-HUNG WATER CLOSET - ADULT

604.10 AMBULATORY ACCESSIBLE COMPARTMENTS

604.10.2 SIZE

THE MINIMUM AREA OF AN AMBULATORY ACCESSIBLE COMPARTMENT SHALL BE 60" INCHES (1525 MM) MINIMUM IN DEPTH AND 36" INCHES (915 MM) IN WIDTH.

604.10.4 GRAB BARS

GRAB BARS SHALL COMPLY WITH SECTION 609. SIDE WALL GRAB BARS COMPLYING WITH SECTION 604.5.1 SHALL BE PROVIDED ON BOTH SIDES OF THE COMPARTMENT.

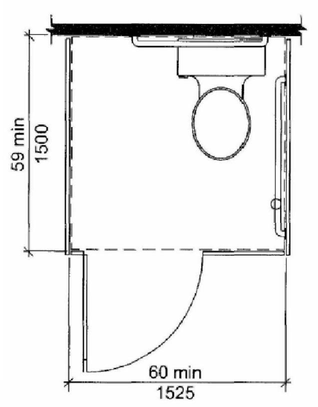

(b)
FLOOR-MOUNTED WATER CLOSET - ADULT WALL-HUNG AND CHILDREN
FIG. 604.9.2
WHEELCHAIR ACCESSIBLE TOILET COMPARTMENTS

604.11 WATER CLOSETS AND TOILET COMPARTMENTS FOR CHILDREN'S USE

604.11.4 HEIGHT

THE HEIGHT OF WATER CLOSET SEARS PRIMARILY FOR CHILDREN'S USE SHALL BE 11" INCHES (280 MM) MINIMUM AND 17" INCHES (430 MM) MAXIMUM ABOVE THE FLOOR, MEASURED TO THE TOP OF THE SEAT.

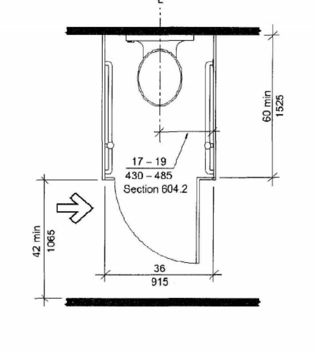

FIG. 604.10
AMBULATORY ACCESSIBLE COMPARTMENTS

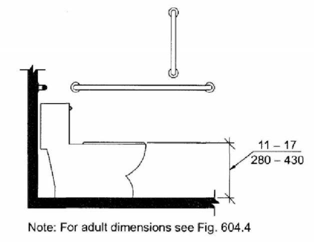

FIG. 604.11.4
CHILDREN'S WATER CLOSET HEIGHT

604.11.7 DISPENSERS

TOILET PAPER DISPENSERS PRIMARILY FOR CHILDREN'S USE SHALL COMPLY WITH SECTION 309.4. THE OUTLET OF DISPENSERS SHALL BE LOCATED WITHIN AN AREA 24" INCHES (610 MM) MINIMUM AND 42" INCHES (1065 MM) MAXIMUM FROM THE REAR WALL. THE OUTLET OF THE DISPENSER SHALL BE 14" INCHES (355 MM) MINIMUM AND 19" INCHES (485 MM) MAXIMUM ABOVE THE FLOOR. THERE SHALL BE A CLEARANCE OF 1-1/2" INCHES (38 MM) MINIMUM BELOW THE GRAB BAR.

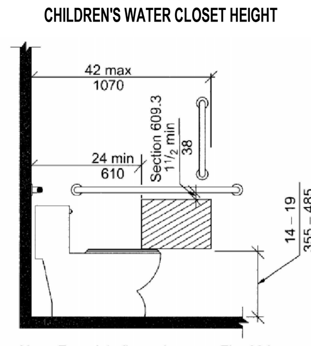

FIG. 604.11.7
CHILDREN'S DISPENSER OUTLET LOCATION

SECTION 605- Urinals

605.2 HEIGHT AND DEPTH

URINALS SHALL BE OF THE STALL TYPE OR SHALL BE OF THE WALL HUNG TYPE WITH THE RIM AT 17" INCHES (430 MM) MAXIMUM ABOVE THE FLOOR. WALL HUNG URINALS SHALL BE 13-1/2" INCHES (345 MM) MINIMUM IN DEPTH MEASURED FROM THE OUTER FACE OF THE URINAL RIM TO THE WALL.

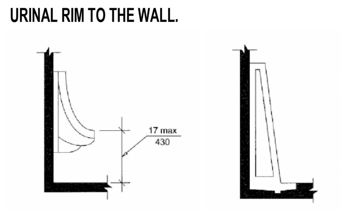

(a)
WALL-HUNG TYPE

(b)
STALL TYPE

FIG. 605.2
HEIGHT OF URINALS

605.3 CLEAR FLOOR SPACE

A CLEAR FLOOR SPACE COMPLYING WITH SECTION 305, POSITIONED FOR FORWARD APPROACH, SHALL BE PROVIDED.

605.4 FLUSH CONTROLS

FLUSH CONTROLS SHALL BE HAND OPERATED OR AUTOMATIC. HAND OPERATED FLUSH CONTROLS SHALL COMPLY WITH SECTION 309.

SECTION 606- Lavatories and Sinks

606.1 GENERAL

ACCESSIBLE LAVATORIES AND SINKS SHALL COMPLY WITH SECTION 606.

606.2 CLEAR FLOOR OR GROUND SPACE

A CLEAR FLOOR OR GROUND SPACE COMPLYING WITH SECTION 305.3, POSITIONED FOR FORWARD APPROACH, SHALL BE PROVIDED. KNEE AND TOE CLEARANCE COMPLYING WITH SECTION 306 SHALL BE PROVIDED. THE DIP OF THE OVER-FLOW SHALL NOT BE CONSIDERED IN DETERMINING KNEE AND TOE CLEARANCES

EXCEPTIONS:

1. A PARALLEL APPROACH COMPLYING WITH SECTION 305 AND CENTERED ON THE SINK SHALL BE PERMITTED TO A KITCHEN SINK IN A SPACE WHERE A COOK TOP OR CONVENTIONAL RANGE IS NOT PROVIDED.
2. THE REQUIREMENT FOR KNEE AND TOE CLEARANCE SHALL NOT APPLY TO A LAVATORY IN A TOILET OR BATHING FACILITY FOR A SINGLE OCCUPANT, ACCESSED ONLY THROUGH A PRIVATE OFFICE AND NOT FOR COMMON USE OR PUBLIC USE.

606.3 HEIGHT

THE FRONT OF LAVATORIES AND SINKS SHALL BE 34" INCHES (865 MM) MAXIMUM ABOVE THE FLOOR OR GROUND, MEASURED TO THE HIGHER OF THE FIXTURE RIM OR COUNTER SURFACE.

EXCEPTIONS:

A LAVATORY IN A TOILET OR BATHING FACILITY FOR A SINGLE OCCUPANT, ACCESSED ONLY THROUGH A PRIVATE OFFICE AND NOT FOR COMMON USE OR PUBLIC USE SHALL NOT BE REQUIRED TO COMPLY WITH 606.3.

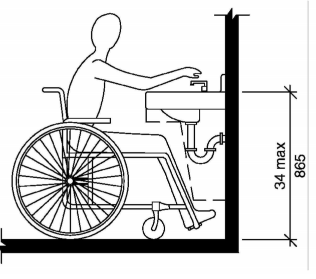

FIG. 606.3
HEIGHT OF LAVATORIES AND SINKS

606.4 FAUCETS

FAUCETS SHALL COMPLY WITH SECTION 309. HAND-OPERATED, SELF-CLOSING FAUCETS SHALL REMAIN OPEN FOR 10 SECONDS MINIMUM.

606.5 LAVATORIES WITH ENHANCED REACH RANGE

WHEN ENHANCED REACH RANGE IS REQUIRED AT LAVATORIES, FAUCETS AND SOAP DISPENSER CONTROLS SHALL HAVE A REACH DEPTH OF 11" INCHES (280 MM) MAXIMUM OR, IF AUTOMATIC, SHALL BE ACTIVATED WITHIN A REACH DEPTH OF 11" INCHES (280 MM) MAXIMUM. WATER AND SOAP FLOW SHALL BE PROVIDED WITH A REACH DEPTH OF 11" INCHES (280 MM) MAXIMUM.

606.6 EXPOSED PIPES AND SURFACES

WATER SUPPLY AND DRAIN PIPES UNDER LAVATORIES AND SINKS SHALL BE INSULATED OR OTHERWISE CONFIGURED TO PROTECT AGAINST CONTACT. THERE SHALL BE NO SHARP OR ABRASIVE SURFACES UNDER LAVATORIES AND SINKS

SECTION 607- Bathtubs

607.1 GENERAL

ACCESSIBLE BATHTUBS SHALL COMPLY WITH SECTION 607.

607.2 CLEARANCE

A CLEARANCE IN FRONT OF BATHTUBS EXTENDING THE LENGTH OF THE BATHTUB AND 30" INCHES (760 MM) MINIMUM IN DEPTH SHALL BE PROVIDED. WHERE A PERMANENT SEAR IS PROVIDED AT THE HEAD END OF THE BATHTUB, THE CLEARANCE SHALL EXTEND 12" INCHES (305 MM) MINIMUM BEYOND THE WALL AT THE HEAD END OF THE BATHTUB.

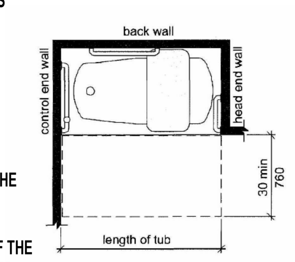

(a)
WITHOUT PERMANENT SEAT

607.3 SEAT

A PERMANENT SEAT AT THE HEAD END OF THE BATHTUB OR A REMOVABLE IN-TUB SEAT SHALL BE PROVIDED. SEATS SHALL COMPLY WITH SECTION 610.

607.4 GRAB BARS

GRAB BARS SHALL COMPLY WITH SECTION 609 AND SHALL BE PROVIDED IN ACCORDANCE WITH SECTION 607.4.1 OR 607.4.2.

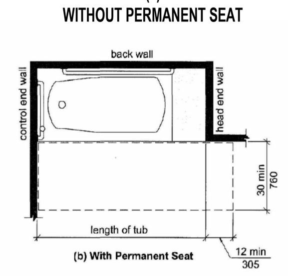

(a)
WITHOUT PERMANENT SEAT
FIG. 607.2
CLEARANCE FOR BATHTUBS

EXCEPTIONS:

GRAB BARS SHALL NOT BE REQUIRED TO BE INSTALLED IN A BATHING FACILITY FOR A SINGLE OCCUPANT ACCESSED ONLY THROUGH A PRIVATE OFFICE AND NOT FOR COMMON USE OR PUBLIC USE, PROVIDED REINFORCEMENT HAS BEEN INSTALLED IN WALLS AND LOCATED SO AS TO PERMIT THE INSTALLATION OF GRAB BARS COMPLYING WITH SECTION 607.4.

607.4.1 BATHTUBS WITH PERMANENT SEAT

FOR BATHTUBS WITH PERMANENT SEATS, GRAB BARS COMPLYING WITH SECTION 607.4.1 SHALL BE PROVIDED.

607.4.1.1 BACK WALL

TWO HORIZONTAL GRAB BARS SHALL BE PROVIDED ON THE BACK WALL, ONE COMPLYING WITH SECTION 609.4 AND THE OTHER LOCATED 8" INCHES (205 MM) MINIMUM AND 10" INCHES (255 MM) MAXIMUM ABOVE THE RIM OF THE BATHTUB. EACH GRAB BAR SHALL BE LOCATED 15" INCHES (380 MM) MAXIMUM FROM THE HEAD END WALL AND EXTEND TO 12" INCHES (305 MM) MAXIMUM FROM THE CONTROL END WALL.

607.4.1.2 CONTROL END WALL

CONTROL END WALL GRAB BARS SHALL COMPLY WITH SECTION 607.4.1.2.

EXCEPTIONS:

AN "L" SHAPED CONTINUOUS GRAB BAR OF EQUIVALENT DIMENSIONS AND POSITIONING SHALL BE PERMITTED TO SERVE THE FUNCTION OF SEPARATE VERTICAL AND HORIZONTAL GRAB BARS.

607.4.1.2.1 HORIZONTAL GRAB BAR

A HORIZONTAL GRAB BAR 24" INCHES (610 MM) MINIMUM IN LENGTH SHALL BE PROVIDED ON THE CONTROL END WALL BEGINNING NEAR THE FRONT EDGE OF THE BATHTUB AND EXTENDING TOWARD THE INSIDE CORNER OF THE BATHTUB.

607.4.1.2.2 VERTICAL GRAB BAR

A VERTICAL GRAB BAR 18" INCHES (455 MM) MINIMUM IN LENGTH SHALL BE PROVIDED ON THE CONTROL END WALL 3" INCHES (75 MM) MINIMUM AND 6" INCHES (150 MM) MAXIMUM ABOVE THE HORIZONTAL GRAB BAR AND 4" INCHES (100 MM) MAXIMUM INWARD FROM THE FRONT EDGE OF THE BATHTUB.

607.4.2 BATHTUBS WITHOUT PERMANENT SEAT

FOR BATHTUBS WITHOUT PERMANENT SEATS, GRAB BARS COMPLYING WITH SECTION 607.4.2 SHALL BE PROVIDED.

607.4.2.1 BACK WALL

TWO HORIZONTAL GRAB BARS SHALL BE PROVIDED ON THE BACK WALL, ONE COMPLYING WITH SECTION 609.4 AND THE OTHER LOCATED 8" INCHES (205 MM) MINIMUM AND 10" INCHES (255 MM) MAXIMUM ABOVE THE RIM OF THE BATHTUB. EACH GRAB BAR SHALL BE LOCATED 24" INCHES (610 MM) MAXIMUM IN LENGTH, LOCATED 24" INCHES (610 MM) MAXIMUM FROM THE HEAD END WALL AND EXTEND TO 12" INCHES (305 MM) MAXIMUM FROM THE CONTROL END WALL.

607.4.2.2 CONTROL END WALL

CONTROL END WALL GRAB BARS SHALL COMPLY WITH SECTION 607.4.1.2.

607.4.2.3 HEAD END WALL

A HORIZONTAL GRAB BAR 12" INCHES (305 MM) MINIMUM IN LENGTH SHALL BE PROVIDED ON THE HEAD END WALL AT THE FRONT EDGE OF THE BATHTUB.

607.5 CONTROLS

CONTROLS, OTHER THAN DRAIN STOPPERS, SHALL BE PROVIDED ON AN END WALL, LOCATED BETWEEN THE BATHTUB RIM AND GRAB BAR, AND BETWEEN THE OPEN SIDE OF THE BATHTUB AND THE CENTERLINE OF THE WIDTH OF THE BATHTUB. CONTROLS SHALL COMPLY WITH SECTION 309.4.

607.6 HAND SHOWER

A HAND SHOWER WITH A HOSE 59" INCHES (1500 MM) MINIMUM IN LENGTH, THAT CAN BE USED AS BOTH A FIXED SHOWER HEAD AND AS A HAND SHOWER, SHALL BE PROVIDED. THE HAND SHOWER SHALL HAVE A CONTROL WITH NONPOSITIVE SHUT-OFF FEATURE. WHERE PROVIDED, AN ADJUSTABLE-HEIGHT HAND SHOWER MOUNTED ON A VERTICAL BAD SHALL BE INSTALLED SO AS TO NOT OBSTRUCT THE USE OF GRAB BARS.

607.6 HAND SHOWER

A HAND SHOWER WITH A HOSE 59" INCHES (1500 MM) MINIMUM IN LENGTH, THAT CAN BE USED AS BOTH A FIXED SHOWER HEAD AND AS A HAND SHOWER, SHALL BE PROVIDED. THE HAND SHOWER SHALL HAVE A CONTROL WITH NONPOSITIVE SHUT-OFF FEATURE. WHERE PROVIDED, AN ADJUSTABLE-HEIGHT HAND SHOWER MOUNTED ON A VERTICAL BAD SHALL BE INSTALLED SO AS TO NOT OBSTRUCT THE USE OF GRAB BARS.

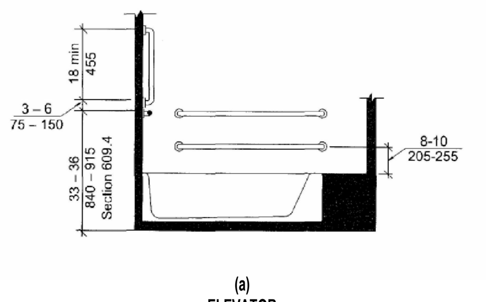

(a)
ELEVATOR

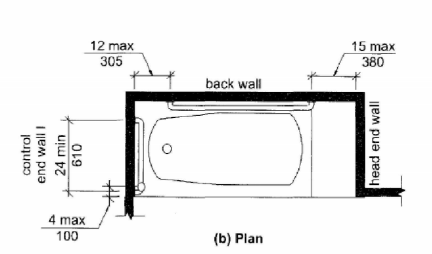

(b)
PLAN
FIG. 607.4.1
GRAB BARS FOR BATHTUBS WITH PERMANENT SEATS

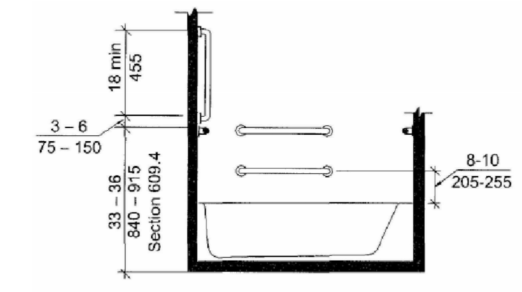

(a)
ELEVATION

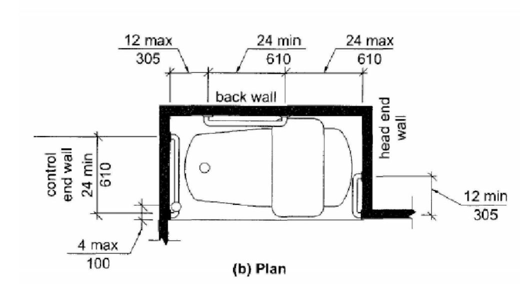

(b)
PLAN
FIG. 607.4.2
GRAB BARS FOR BATHTUBS WITHOUT PERMANENT SEATS

SECTION 608- Shower Compartments

608.1 GENERAL

ACCESSIBLE SHOWER COMPARTMENTS SHALL COMPLY WITH SECTION 608.

608.2.1 TRANSFER-TYPE SHOWER COMPARTMENTS

TRANSFER-TYPE SHOWER COMPARTMENTS SHALL COMPLY WITH SECTION 608.2.1.

608.2.1.1 SIZE

TRANSFER-TYPE SHOWER COMPARTMENT SHALL HAVE A CLEAR INSIDE DIMENSION OF 36" INCHES (915 MM) IN WIDTH AND 36" INCHES (915 MM) IN DEPTH, MEASURED AT THE CENTER POINT OF OPPOSING SIDES. AND ENTRY 36" INCHES (915 MM) MINIMUM IN WIDTH SHALL BE PROVIDED.

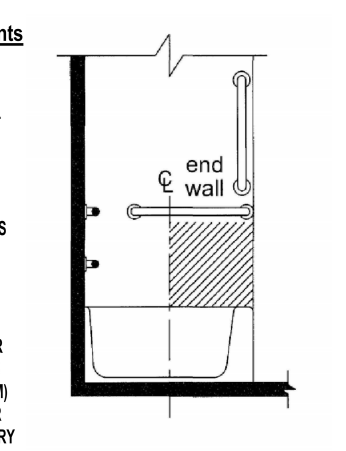

FIG. 607.5
LOCATION OF BATHTUB CONTROLS

608.2.1.2 CLEARANCE

A CLEARANCE OF 48" INCHES (1220 MM) MINIMUM IN LENGTH MEASURED PERPENDICULAR FROM THE CONTROL WALL AND 36" INCHES (915 MM) MINIMUM IN DEPTH SHALL BE PROVIDED ADJACENT TO THE OPEN FACE OF THE COMPARTMENT.

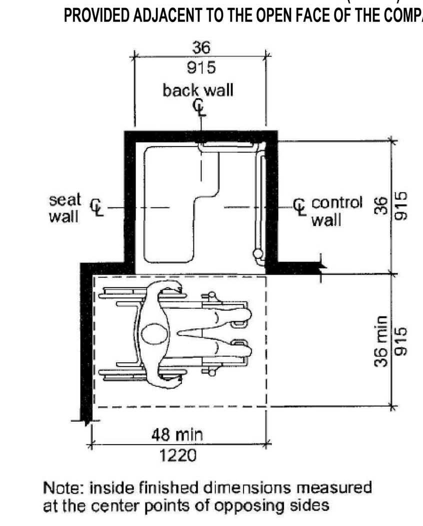

FIG. 608.2.1
TRANSFER-TYPE SHOWER COMPARTMENT SIZE AND CLEARANCE

608.2.2 STANDARD ROLL-IN TYPE SHOWER COMPARTMENTS

STANDARD ROLL-IN TYPE SHOWER COMPARTMENTS SHALL COMPLY WITH SECTION 608.2.2.

608.2.2.1 SIZE

STANDARD ROLL-IN-TYPE SHOWER COMPARTMENT SHALL HAVE A CLEAR INSIDE DIMENSION OF 60" INCHES (1525 MM) MINIMUM IN WIDTH AND 30" INCHES (760 MM) MINIMUM IN DEPTH, MEASURED AT THE CENTER POINT OF OPPOSING SIDES. AN ENTRY 60" INCHES (1525 MM) MINIMUM IN WIDTH SHALL BE PROVIDED.

608.2.2.2 CLEARANCE

A CLEARANCE OF 60" INCHES (1525 MM) MINIMUM IN LENGTH ADJACENT TO THE 60" INCH (1525 MM) WIDTH OF THE OPEN FACE OF THE SHOWER COMPARTMENT, AND 30" INCHES (760 MM) MINIMUM IN DEPTH, SHALL BE PROVIDED.

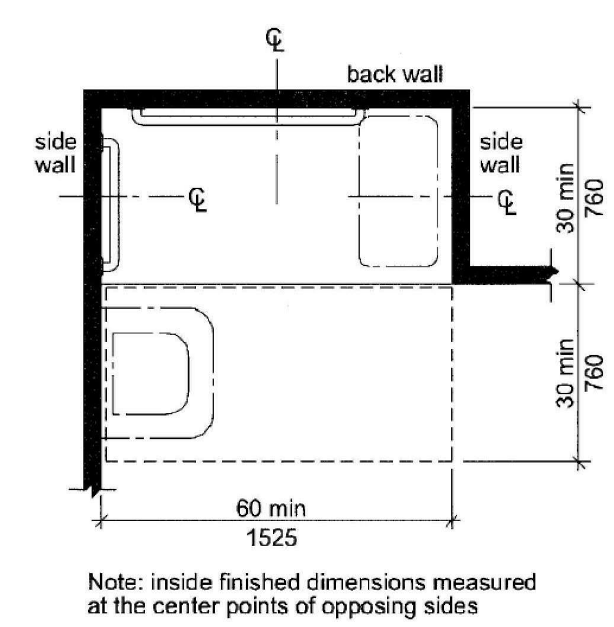

FIG. 608.2.2
STANDARD ROLL-IN-TYPE SHOWER COMPARTMENT SIZE AND CLEARANCE

608.3 GRAB BARS

GRAB BARS SHALL COMPLY WITH SECTION 609 AND SHALL BE PROVIDED IN ACCORDANCE WITH SECTION 608.3. WHERE MULTIPLE GRAB BARS ARE USED, REQUIRED HORIZONTAL GRAB BARS SHALL BE INSTALLED AT THE SAME HEIGHT ABOVE THE FLOOR.

608.3.1.1 HORIZONTAL GRAB BAR

HORIZONTAL GRAB BARS SHALL BE PROVIDED ACROSS THE CONTROL WALL AND ON THE BACK WALL TO A POINT 18 INCHES (455 MM) FROM THE CONTROL WALL.

608.3.1.2 VERTICAL GRAB BAR

A VERTICAL GRAB BAR 18 INCHES (455 MM) MINIMUM IN LENGTH SHALL BE PROVIDED ON THE CONTROL END WALL 3 INCHES (75 MM) MINIMUM AND 6 INCHES (150 MM) MAXIMUM ABOVE THE HORIZONTAL GRAB BAR, AND 4 INCHES (100 MM) MAXIMUM INWARD FROM THE FRONT EDGE OF THE SHOWER.

SECTION 609 - GRAB BARS

609.1 GENERAL

GRAB BARS IN ACCESSIBLE TOILET OR BATHING FACILITIES SHALL COMPLY WITH SECTION 609.

609.2 CROSS SECTION

GRAB BARS SHALL HAVE A CROSS SECTION COMPLYING WITH SECTION 609.2.1 OR 609.2.2.

609.2.1 CIRCULAR CROSS SECTION

GRAB BARS WITH A CIRCULAR CROSS SECTION SHALL HAVE AN OUTSIDE DIAMETER OF 1-1/4" INCH (32 MM) MINIMUM AND 2" INCHES (51 MM) MAXIMUM.

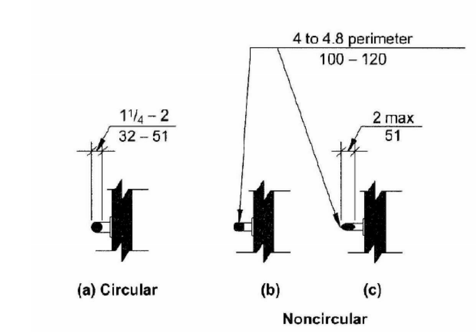

FIG. 609.2
SIZE OF GRAB BARS

609.2.2 NONCIRCULAR CROSS SECTION

GRAB BARS WITH A NON CIRCULAR CROSS SECTION SHALL HAVE A CROSS SECTION DIMENSION OF 2" INCHES (51 MM) MAXIMUM, AND A PERIMETER DIMENSION OF 4" INCHES (102 MM) MINIMUM AND 4.8" INCHES (122 MM) MAXIMUM.

609.3 SPACING

THE SPACE BETWEEN THE WALL AND THE GRAB BAR SHALL BE 1-1/2" INCHES (38 MM). THE SPACE BETWEEN THE GRAB BAR AND PROJECTING OBJECTS BELOW AND AT THE ENDS OF THE GRAB BAR SHALL BE 1-1/2" INCHES (38 MM) MINIMUM. THE SPACE BETWEEN THE GRAB BAR AND PROJECTING OBJECTS ABOVE THE GRAB BAR SHALL BE 12" INCHES (305 MM) MINIMUM.

EXCEPTIONS:

1. THE SPACE BETWEEN THE GRAB BARS AND SHOWER CONTROLS, SHOWER FITTINGS, AND OTHER GRAB BARS ABOVE THE GRAB BAR SHALL BE PERMITTED TO BE 1-1/2" INCHES (38 MM) MINIMUM.
2. RECESSED DISPENSERS PROJECTING FROM THE WALL 1/4" INCH (6.4 MM) MAXIMUM MEASURED FROM THE FACE OF THE DISPENSER AND COMPLYING WITH SECTION 604.7 SHALL BE PERMITTED WITHIN THE 12" INCH (305 MM) SPACE ABOVE AND THE 1-1/2" INCH (38 MM) SPACES BELOW AND AT THE ENDS OF THE GRAB BAR.

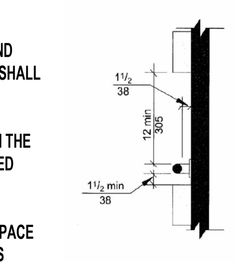

FIG. 609.3
SPACING OF GRAB BARS

609.4.1 POSITION OF GRAB BARS - GENERAL

GRAB BARS SHALL BE INSTALLED IN A HORIZONTAL POSITION, 33" INCHES (840 MM) MINIMUM AND 36" INCHES (915 MM) MAXIMUM ABOVE THE FLOOR MEASURED TO THE TOP OF THE GRIPPING SURFACE OR SHALL BE INSTALLED AS REQUIRED BY ITEMS 1 THROUGH 3.

EXCEPTIONS:

1. THE LOWER GRAB BAR ON THE BACK WALL OF THE BATHTUB SHALL COMPLY WITH SECTION 607.4.1.1 OR 607.4.2.1.
2. VERTICAL GRAB BARS SHALL COMPLY WITH SECTIONS 604.5.1, 607.4.1.2.2, 607.4.2.2 AND 608.3.1.2.
3. GRAB BARS AT WATER CLOSETS PRIMARILY FOR CHILDREN'S USE SHALL COMPLY WITH SECTIONS 609.4.2.

609.4.1 POSITION OF CHILDREN'S GRAB BARS

AT WATER CLOSETS PRIMARILY FOR CHILDREN'S USE COMPLYING WITH SECTION 604.11, GRAB BARS SHALL BE INSTALLED IN A HORIZONTAL POSITION 18" INCHES (455 MM) MINIMUM AND 27" INCHES (685 MM) MAXIMUM ABOVE THE FLOOR MEASURED TO THE TOP OF THE GRIPPING SURFACE. A VERTICAL GRAB BAR SHALL BE MOUNTED WITH THE BOTTOM OF THE BAR LOCATED BETWEEN 21" INCHES (535 MM) MINIMUM AND 30 " INCHES (760 MM) MAXIMUM ABOVE THE FLOOR AND WITH THE CENTERLINE OF THE BAR LOCATED BETWEEN 34" INCHES (865 MM) MINIMUM AND 36" INCHES (915 MM) MAXIMUM FROM THE REAR WALL.

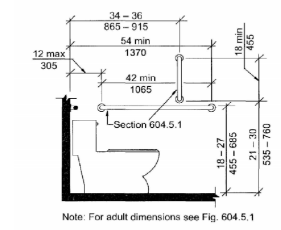

(a)
SIDE WALL VIEW

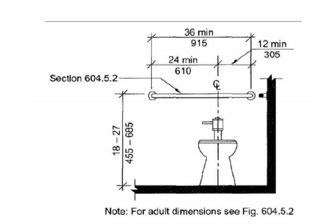

(b)
REAR WALL VIEW

FIG. 609.4.2
POSITION OF CHILDREN'S GRAB BARS

609.5 SURFACE HAZARDS

GRAB BARS, AND ANY WALL OR OTHER SURFACES ADJACENT TO GRAB BARS, SHALL BE FREE OF SHARP OR ABRASIVE ELEMENTS. EDGES SHALL BE ROUNDED.

609.6 FITTINGS

GRAB BARS SHALL NOT ROTATE WITHIN THEIR FITTINGS.

609.7 INSTALLATION AND CONFIGURATION

GRAB BARS SHALL BE INSTALLED IN ANY MANNER THAT PROVIDES A GRIPPING SURFACE AT THE LOCATIONS SPECIFIED IN THIS STANDARD AND THAT DOES NOT OBSTRUCT THE CLEAR FLOOR SPACE. HORIZONTAL AND VERTICAL GRAB BARS SHALL BE PERMITTED TO BE SEPARATE BARS, A SINGLE PIECE BAR OR COMBINATION THEREOF.

609.8 STRUCTURAL STRENGTH

ALLOWABLE STRESSES SHALL NOT BE EXCEEDED FOR MATERIALS USED WHERE A VERTICAL OR HORIZONTAL FORCE OF 250 LB. (1112 N) IS APPLIED AT ANY POINT ON THE GRAB BAR, FASTENER MOUNTING DEVICE, OR SUPPORTING STRUCTURE.

SECTION 611 - WASHING MACHINES AND CLOTHES DRYERS

611.2 CLEAR FLOOR SPACE

A CLEAR FLOOR SPACE COMPLYING WITH SECTION 305, POSITIONED FOR PARALLEL APPROACH SHALL BE PROVIDED. FOR TOP LOADING MACHINES, THE CLEAR FLOOR SPACE SHALL BE CENTERED ON THE APPLIANCE. FOR THE FRONT LOADING MACHINES, THE CENTERLINE OF THE CLEAR FLOOR SPACE SHALL BE OFFSET 24" INCHES (610 MM) MAXIMUM FROM THE CENTERLINE OF THE DOOR OPENING.

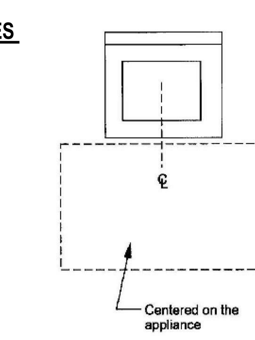

(a)
TOP LOADING

611.4 HEIGHT

TOP LOADING MACHINES SHALL HAVE A DOOR TO THE LAUNDRY COMPARTMENT 36" INCHES (915MM) MAXIMUM ABOVE THE FLOOR. FRONT LOADING MACHINES SHALL HAVE THE BOTTOM OF THE OPENING TO THE LAUNDRY COMPARTMENT 15" INCHES (380 MM) MINIMUM AND 36 INCHES (915 MM) MAXIMUM ABOVE THE FLOOR.

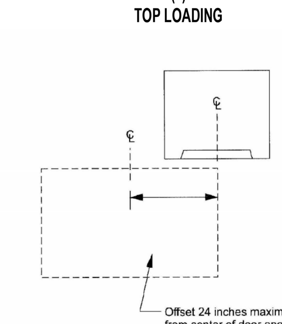

(b)
FRONT LOADING

FIG. 611.2
CLEAR FLOOR SPACE

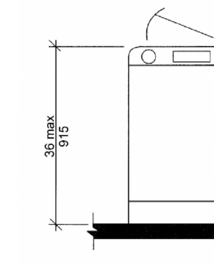

(a)
TOP LOADING

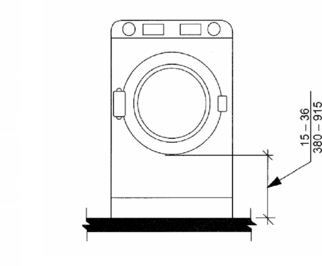

(b)
FRONT LOADING

FIG. 611.2
CLEAR FLOOR SPACE

H2M architects + engineers

538 Broad Hollow Road, 4th Floor East
Melville, NY 11747
631.756.8000 ▪ www.h2m.com
Architecture & Landscape Architecture: No Certificate Required
Engineering Certificate of Authorization No.: 0018178

CONSULTANTS:

MARK	DATE	DESCRIPTION

KEVIN M. MEDLER, R.A.
NY PROFESSIONAL ARCHITECT Lic. No. 038379
"ALTERATION OF THIS DOCUMENT EXCEPT BY A LICENSED PROFESSIONAL IS ILLEGAL"
07/31/2024
Exp. Date

DESIGNED BY:	DRAWN BY:	CHECKED BY:	REVIEWED BY:
CWP	DOD/NPO	CWP/KMM	

PROJECT No:	DATE:	SCALE:
WPSD 2203	MARCH 2025	AS SHOWN

CLIENT
WHITE PLAINS CITY SCHOOL DISTRICT

ADDITION AT WHITE PLAINS HIGH SCHOOL

550 NORTH STREET, WHITE PLAINS, NY 10605

66-22-00-01-0-016-030

CONTRACT
ALL CONTRACTS

STATUS
FINAL BID SET

SHEET TITLE
GENERAL ACCESSIBILITY REQUIREMENTS

DRAWING No.
G 121.00

C:\Users\ddesouza\Documents\WPSD2203_Central21_A_DDeSouzaD8TU8.rvt
3/6/2025 2:53:39 PM

SECTION 703 - SIGNS

703.1 GENERAL

ACCESSIBLE SIGNS SHALL COMPLY WITH SECTION 703. TACTILE SIGNS SHALL CONTAIN BOTH RAISED CHARACTERS AND BRAILLE. WHERE SIGNS WITH BOTH VISUAL AND RAISED CHARACTERS ARE REQUIRED, EITHER ONE SIGN WITH BOTH VISUAL AND RAISED CHARACTERS, OR TWO SEPARATE SIGNS, ONE WITH VISUAL AND ONE WITH RAISED CHARACTERS SHALL BE PROVIDED

703.2 VISUAL CHARACTERS

703.2.1 GENERAL

VISUAL CHARACTERS SHALL COMPLY WITH THE FOLLOWING:

1. VISUAL CHARACTERS THAT ALSO SERVE AS RAISED CHARACTERS SHALL COMPLY WITH SECTION 703.3 OR
2. VISUAL CHARACTERS ON VMS SIGNAGE SHALL COMPLY WITH SECTION 703.7, OR
3. VISUAL CHARACTERS NOT COVERED IN ITEMS 1 AND 2 SHALL COMPLY WITH SECTION 703.2

EXCEPTION:

THE VISUAL AND RAISED REQUIREMENT OF ITEM 1 SHALL BE PERMITTED TO BE PROVIDED BY TWO SEPARATE SIGNS THAT PROVIDE CORRESPONDING INFORMATION PROVIDED ONE SIGN COMPLIES WITH SECTION 703.2 AND THE SECOND SIGN COMPLIES WITH SECTION 703.3.

703.2.2 CASE

CHARACTERS SHALL BE UPPERCASE, LOWERCASE, OR A COMBINATION OF BOTH.

703.2.3 STYLE

CHARACTERS SHALL BE CONVENTIONAL IN FORM. CHARACTERS SHALL NOT BE ITALIC, OBLIQUE, SCRIPT, HIGHLY DECORATIVE, OR OF OTHER UNUSUAL FORMS.

703.2.4 CHARACTER HEIGHT

THE UPPERCASE LETTER "I" SHALL BE USED TO DETERMINE THE ALLOWABLE HEIGHT OF ALL CHARACTERS OF A FONT. THE UPPERCASE LETTER "I" OF THE FONT SHALL HAVE A MINIMUM HEIGHT COMPLYING WITH TABLE 703.2.4. VIEWING DISTANCE SHALL BE MEASURED AS THE HORIZONTAL DISTANCE BETWEEN THE CHARACTER AND AN OBSTRUCTION PREVENTING FURTHER APPROACH TOWARDS THE SIGN.

703.2.5 CHARACTER WIDTH

THE UPPERCASE LETTER "O" SHALL BE USED TO DETERMINE THE ALLOWABLE WIDTH OF ALL CHARACTERS OF A FONT. THE WIDTH OF THE UPPERCASE LETTER "O" OF THE FONT SHALL BE 55 PERCENT MINIMUM AND 110 PERCENT MAXIMUM OF THE HEIGHT OF THE UPPERCASE "I" OF THE FONT.

703.2.6 STROKE WIDTH

THE UPPERCASE LETTER 'I' SHALL BE USED TO DETERMINE THE ALLOWABLE STROKE WIDTH OF ALL CHARACTERS OF A FONT. THE STROKE WIDTH SHALL BE 10 PERCENT MINIMUM AND 30 PERCENT MAXIMUM OF THE HEIGHT OF THE UPPERCASE "I" OF THE FONT.

703.2.7 CHARACTER SPACING

SPACING SHALL BE MEASURED BETWEEN THE TWO CLOSEST POINTS OF ADJACENT CHARACTERS WITHIN A MESSAGE, EXCLUDING WORD SPACES. SPACING BETWEEN INDIVIDUAL CHARACTERS SHALL BE 10 PERCENT MINIMUM AND 35 PERCENT MAXIMUM OF THE CHARACTER HEIGHT.

SECTION 705- DETECTABLE WARNINGS

705.1 GENERAL

DETECTABLE WARNING SURFACES SHALL COMPLY WITH SECTION 705.

705.2 STANDARDIZATION

DETECTABLE WARNING SURFACES SHALL BE STANDARD WITHIN A BUILDING, FACILITY, SITE, OR COMPLEX OF BUILDINGS.

EXCEPTION:

IN FACILITIES THAT HAVE BOTH INTERIOR AND EXTERIOR LOCATIONS, DETECTABLE WARNINGS IN EXTERIOR LOCATIONS SHALL NOT BE REQUIRED TO COMPLY WITH SECTION 705.4.

705.3 CONTRAST

DETECTABLE WARNING SURFACES SHALL CONTRAST VISUALLY WITH ADJACENT SURFACES, EITHER LIGHT-ON-DARK OR DARK-ON-LIGHT.

705.4 INTERIOR LOCATIONS

DETECTABLE WARNING SURFACES IN INTERIOR LOCATIONS SHALL DIFFER FROM ADJOINING WALKING SURFACES IN RESILIENCY OR SOUND-ON-CANE CONTACT.

SECTION 706- ASSISTIVE LISTENING SYSTEMS

706.1 GENERAL

ACCESSIBLE ASSISTIVE LISTENING SYSTEMS IN ASSEMBLY AREAS SHALL COMPLY WITH SECTION 706.

706.2 GENERAL

RECEIVERS REQUIRED FOR USE WITH AN ASSISTIVE LISTENING SYSTEM SHALL INCLUDE A 1/8-INCH (3.2 MM) STANDARD MONO JACK.

706.3 RECEIVER HEARING-AID COMPATIBILITY

RECEIVERS REQUIRED TO BE HEARING AID COMPATIBLE SHALL INTERFACE WITH TELECOILS IN HEARING AIDS THROUGH THE PROVISION OF NECK LOOPS.

706.4 SOUND PRESSURE LEVEL

ASSISTIVE LISTENING SYSTEMS SHALL BE CAPABLE OF PROVIDING A SOUND PRESSURE LEVEL OF 110 DB MINIMUM AND 118 DB MAXIMUM, WITH A DYNAMIC RANGE ON THE VOLUME CONTROL OF 50 DB.

706.5 SIGNAL-TO-NOISE RATIO

THE SIGNAL-TO-NOISE RATIO FOR INTERNALLY GENERATED NOISE IN ASSISTIVE LISTENING SYSTEMS SHALL BE 18 DB MINIMUM.

706.5 PEAK CLIPPING LEVEL

PEAK CLIPPING SHALL NOT EXCEED 18 DB OF CLIPPING RELATIVE TO THE PEAKS OF SPEECH.

SECTION 803 - Dressing, Fitting and Locker Rooms

803.1 GENERAL

ACCESSIBLE DRESSING, FITTING AND LOCKER ROOMS SHALL COMPLY WITH SECTION 803.

803.2 TURNING SPACE

A TURNING SPACE COMPLYING WITH SECTION 304 SHALL BE PROVIDED WITHIN THE ROOM.

803.3 DOOR SWING

DOORS SHALL NOT SWING INTO THE ROOM UNLESS A CLEAR FLOOR SPACE COMPLYING WITH SECTION 305.3 IS PROVIDED WITHIN THE ROOM, BEYOND THE ARC OF THE DOOR SWING.

803.4 BENCHES

A BENCH COMPLYING WITH SECTION 903 SHALL BE PROVIDED WITHIN THE ROOM.

803.5 COAT HOOKS AND SHELVES

ACCESSIBLE COAT HOOKS PROVIDED WITHIN THE ROOM SHALL ACCOMMODATE A FORWARD REACH OR SIDE REACH COMPLYING WITH SECTION 308. WHERE PROVIDED, A SHELF SHALL BE 40 INCHES (1015 MM) MINIMUM AND 48 INCHES (1220 MM) MAXIMUM ABOVE THE FLOOR.

SECTION 804 - KITCHENS AND KITCHENETTES

804.1 GENERAL

ACCESSIBLE KITCHENS AND KITCHENETTES SHALL COMPLY WITH SECTION 804.

804.2 CLEARANCE

WHERE A PASS-THROUGH KITCHEN IS PROVIDED, CLEARANCES SHALL COMPLY WITH SECTION 804.2.1. WHERE A U-SHAPED KITCHEN IS PROVIDED, CLEARANCES SHALL COMPLY WITH SECTION 804.2.2.

EXCEPTIONS:

SPACES THAT DO NOT PROVIDE A COOKTOP OR CONVENTIONAL RANGE SHALL NOT BE REQUIRED, PROVIDED THERE IS A 40-INCH (1015MM) MINIMUM CLEARANCE BETWEEN ALL OPPOSING BASE CABINETS, COUNTER TOPS, APPLIANCES, OR WALLS WITHIN WORK AREAS.

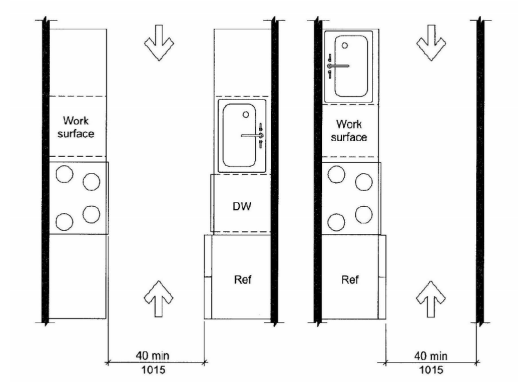

(a) (b)

FIG. 804.2.1
PASS-THROUGH KITCHEN CLEARANCE

804.2.1 PASS-THROUGH KITCHENS

IN PASS-THROUGH KITCHENS WHERE COUNTERS, APPLIANCES OR CABINETS ARE ON TWO OPPOSING SIDES, OR WHERE COUNTER, APPLIANCES OR CABINETS ARE OPPOSITE A PARALLEL WALL, CLEARANCE BETWEEN ALL OPPOSING BASE CABINETS, COUNTER TOPS, APPLIANCES OR WALLS WITHIN KITCHEN WORK AREAS SHALL BE 40 INCHES (1015 MM) MINIMUM. PASS-THROUGH KITCHENS SHALL HAVE TWO ENTRIES.

804.2.2 U-SHAPED KITCHENS

IN KITCHENS ENCLOSED ON THREE CONTIGUOUS SIDES, CLEARANCE BETWEEN ALL OPPOSING BASE CABINETS, COUNTERTOPS, APPLIANCES OR WALLS WITHIN KITCHEN WORK AREAS SHALL BE 60 INCHES (1525 MM) MINIMUM.

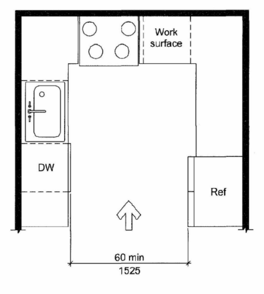

(a)

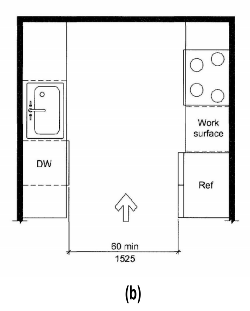

(b)

FIG. 804.2.2
U-SHAPED KITCHEN CLEARANCE

804.3 WORK SURFACE

AT LEAST ONE WORK SURFACE SHALL BE PROVIDED IN ACCORDANCE WITH 902.

EXCEPTIONS:

SPACES THAT DO NOT PROVIDE A COOKTOP OR CONVENTIONAL RANGE SHALL NOT BE REQUIRED TO PROVIDE AN ACCESSIBLE WORK SURFACE.

804.4 SINKS

THE SINK SHALL COMPLY WITH 606.

804.5 APPLIANCES

WHERE PROVIDED, KITCHEN APPLIANCES SHALL COMPLY WITH SECTION 804.5.

804.5.1 CLEAR FLOOR SPACE

A CLEAR FLOOR SPACE COMPLYING WITH SECTION 305 SHALL BE PROVIDED AT EACH KITCHEN APPLIANCE.

804.5.2 OPERABLE PARTS

ALL APPLIANCE CONTROLS SHALL COMPLY IN SECTION 309.

EXCEPTIONS:

1. APPLIANCE DOORS AND DOOR LATCHING DEVICES SHALL NOT BE REQUIRED TO COMPLY WITH SECTION 309.4.
2. BOTTOM-HINGED APPLIANCE DOORS, WHEN IN THE OPEN POSITION,SHALL NOT BE REQUIRED TO COMPLY WITH SECTION 309.3.

804.5.3 DISHWASHER

A CLEAR FLOOR SPACE POSITIONED ADJACENT TO THE DISHWASHER DOOR, SHALL BE PROVIDED. THE DISHWASHER DOOR IN THE OPEN POSITION SHALL NOT OBSTRUCT THE CLEAR FLOOR SPACE FOR THE DISHWASHER OR AN ADJACENT SINK.

804.5.4 COOKTOP

804.5.4.1 APPROACH

A CLEAR FLOOR SPACE, POSITIONED FOR A PARALLEL OR FORWARD APPROACH TO THE COOKTOP SHALL BE PROVIDED.

804.5.4.2 FORWARD APPROACH

WHERE THE CLEAR FLOOR SPACE IS POSITIONED FOR A FORWARD APPROACH, KNEE AND TOE CLEARANCE COMPLYING WITH SECTION 306 SHALL BE PROVIDED.

804.5.4.3 PARALLEL APPROACH

WHERE THE CLEAR FLOOR SPACE IS POSITIONED FOR A PARALLEL APPROACH, THE CLEAR FLOOR SPACE SHALL BE CENTERED ON THE APPLIANCE.

804.5.5 OVEN

804.5.5.1 CLEAR FLOOR SPACE

THE OVEN DOOR IN THE OPEN POSITION SHALL NOT OBSTRUCT THE CLEAR FLOOR SPACE FOR THE OVEN.

804.5.6 REFRIGERATOR / FREEZER

A CLEAR FLOOR SPACE, POSITIONED FOR A PARALLEL APPROACH TO THE REFRIGERATOR / FREEZER, SHALL BE PROVIDED. THE CENTERLINE OF THE CLEAR FLOOR SPACE SHALL BE OFFSET 24 INCHES (610 MM) MAXIMUM FROM THE CENTERLINE OF THE APPLIANCE.

SECTION 903 - BENCHES

903.2 CLEAR FLOOR SPACE

A CLEAR FLOOR SPACE COMPLYING WITH SECTION 305, POSITIONED FOR PARALLEL APPROACH TO THE BENCH SEAT, SHALL BE PROVIDED.

903.3 SIZE

BENCHES SHALL HAVE SEATS 42" INCHES (1065 MM) MINUMUM IN LENGTH, AND 20" INCHES (510 MM) MINIMUM AND 24" INCHES (610 MM) MAXIMUM IN DEPTH.

903.4 HEIGHT

THE TOP OF THE BENCH SEAT SHALL BE 17" INCHES (430 MM) MINIMUM AND 19 " INCHES (485 MM) MAXIMUM ABOVE THE FLOOR, MEASURED TO THE TOP OF THE SEAT.

ACCESSIBILITY NOTES:

GENERAL NOTES

1. SPECIAL ATTENTION SHALL BE GIVEN TO COMPLIANCE WITH THE AMERICANS WITH DISABILITIES ACT STANDARDS FOR ACCESSIBLE DESIGN (ADAAG), BUILDING CODE OF APPLICABLE BLDG CODE, AND APPLICABLE LOCAL LAWS AND REGULATIONS, LATEST EDITIONS.
2. IT IS ESSENTIAL THAT CONTRACTORS ARE AWARE OF THE SITE ACCESSIBILITY REQUIREMENTS. THE ARCHITECT HAS DEVELOPED THESE NOTES AND DETAILS TO ASSURE THAT CONTRACTORS ARE AWARE OF THE REQUIREMENTS AT THE POINT IN TIME WHEN THEY ARE BIDDING THE PROJECT. IN ADDITION, THE ARCHITECT HAS MADE A POINT IN THESE NOTES AND DETAILS, AS WELL AS IN OUR DRAWINGS, TO PROVIDE SLOPES / GRADES AND DIMENSIONS THAT COMPLY WITH THE ADAAG, APPLICABLE BLDG CODE AND APPLICABLE LOCAL LAWS AND REGULATIONS, LATEST EDITIONS. IF THESE SLOPES / GRADES AND DIMENSIONS ARE NOT ACHIEVABLE, THE CONTRACTOR IS REQUIRED TO CONTACT THE OWNER AND ARCHITECT IMMEDIATELY AND BEFORE MOVING FORWARD WITH THE WORK.
3. THE CONTRACTOR SHALL NOTIFY THE ARCHITECT IMMEDIATELY OF ANY CONFLICT BETWEEN THESE NOTES AND DETAILS AND OTHER PROJECT DRAWINGS, WHETHER BY THE ARCHITECT OR OTHERS. THE CONTRACTOR SHALL NOT PROCEED WITH THE WORK FOR WHICH THE ALLEGED CONFLICT HAS BEEN DISCOVERED UNTIL SUCH ALLEGED CONFLICT HAS BEEN RESOLVED. NO CLAIM SHALL BE MADE BY THE CONTRACTOR FOR DELAY DAMAGES AS A RESULT OF RESOLUTION OF ANY SUCH CONFLICT(S).
4. THESE ACCESSIBILITY NOTES AND DETAILS ARE INTENDED TO DEPICT SLOPE AND DIMENSIONAL REQUIREMENTS ONLY. REFER TO SIDEWALK, CURBING, AND PAVEMENT DETAILS FOR ADDITIONAL INFORMATION.

ACCESSIBLE ROUTE NOTES

1. AT LEAST ONE ACCESSIBLE ROUTE SHALL BE PROVIDED FROM THE SITE FROM ACCESSIBLE PARKING SPACES AND ACCESSIBLE PASSENGER LOADING ZONES; PUBLIC STREETS OR SIDEWALKS; AND PUBLIC TRANSPORTATION STOPS TO THE ACCESSIBLE BUILDING OR FACILITY THEY SERVE.
2. AT LEAST ONE ACCESSIBLE ROUTE SHALL CONNECT ACCESSIBLE BUILDINGS, ACCESSIBLE FACILITIES, ACCESSIBLE ELEMENTS, AND ACCESSIBLE SPACES THAT ARE ON THE SAME SITE.
3. WALKING SURFACES SHALL HAVE A MAXIMUM RUNNING SLOPE OF 5.0% AND MAXIMUM CROSS SLOPE OF 2.0%.
4. ANY WALKING SURFACE WITH A RUNNING SLOPE GREATER THAN 5.0% IS A RAMP AND SHALL COMPLY WITH THE GUIDELINES FOR RAMPS OR CURB RAMPS.
5. TRANSITIONS BETWEEN RAMPS, WALKS, LANDINGS, GUTTERS OR STREETS SHALL BE FLUSH AND FREE OF ABRUPT VERTICAL CHANGES (1/4 INCH MAXIMUM VERTICAL CHANGE IN LEVEL).
6. FLOOR SURFACES SHALL BE STABLE, FIRM AND SLIP RESISTANT.
7. THE MINIMUM CLEAR WIDTH SHALL BE THIRTY-TWO (32) INCHES FOR A ROUTE SEGMENT LENGTH LESS THAN TWENTY-FOUR (24) INCHES. CONSECUTIVE SEGMENTS OF THIRTY-TWO (32) INCHES IN WIDTH MUST BE SEPARATED BY A ROUTE SEGMENT FORTY-EIGHT (48) INCHES MINIMUM IN LENGTH AND THIRTY-SIX (36) INCHES MINIMUM IN WIDTH.
8. THE MINIMUM CLEAR WIDTH SHALL BE THIRTY-SIX (36) INCHES FOR A ROUTE SEGMENT LENGTH GREATER THAN TWENTY-FOUR (24) INCHES.
9. WHERE AN ACCESSIBLE ROUTE MAKES A 180 DEGREE TURN AROUND AN OBJECT THAT IS LESS THAN FORTY-EIGHT (48) INCHES IN WIDTH, CLEAR WIDTH SHALL BE FORTY-TWO (42) INCHES MINIMUM APPROACHING THE TURN, FORTY-EIGHT (48) INCHES MINIMUM DURING THE TURN, AND FORTY-TWO (42) INCHES MINIMUM LEAVING THE TURN. THE CLEAR WIDTH APPROACHING AND LEAVING THE TURN MAY BE THIRTY-SIX (36) INCHES MINIMUM WHEN THE CLEAR WIDTH AT THE TURN IS SIXTY (60) INCHES MINIMUM.
10. AN ACCESSIBLE ROUTE WITH A CLEAR WIDTH LESS THAN SIXTY (60) INCHES SHALL PROVIDE PASSING SPACES AT INTERVALS OF TWO HUNDRED (200) FEET MAXIMUM. PASSING SPACES SHALL BE EITHER A SIXTY (60) INCH MINIMUM BY SIXTY (60) INCH MINIMUM SPACE; OR AN INTERSECTION OF TWO (2) WALKING SURFACES THAT PROVIDE A COMPLIANT T-SHAPED TURNING SPACE, PROVIDED THE BASE AND ARMS OF THE T-SHAPED SPACE EXTEND FORTY-EIGHT (48) INCHES MINIMUM BEYOND THE INTERSECTION.
11. DOORS, DOORWAYS AND GATES THAT ARE PART OF AN ACCESSIBLE ROUTE SHALL COMPLY WITH ADAAG AND APPLICABLE BLDG CODE REQUIREMENTS.
12. DIRECTIONAL SIGNAGE INDICATING THE ROUTE TO THE NEAREST ACCESSIBLE BUILDING ENTRANCE SHALL BE PROVIDED AT INACCESSIBLE BUILDING ENTRANCES.
13. WHERE POSSIBLE, DRAINAGE INLETS SHALL NOT BE LOCATED ON AN ACCESSIBLE ROUTE IN THE EVENT THAT A DRAINAGE INLET MUST BE LOCATED ON AN ACCESSIBLE ROUTE, THE GRATE SHALL COMPLY WITH ADAAG REQUIREMENTS.

PARKING SPACE NOTES:

1. ACCESSIBLE PARKING SPACES SHALL BE LOCATED ON THE SHORTEST ACCESSIBLE ROUTES OF TRAVEL FROM ADJACENT PARKING TO AN ACCESSIBLE BUILDING ENTRANCE.
2. ACCESSIBLE PARKING SPACES AND ACCESS AISLES SHALL BE AT LEAST NINETY-SIX (96) INCHES WIDE. WHERE PARKING SPACES AND ACCESS AISLES ARE MARKED WITH LINES, THE WIDTH MEASUREMENTS SHALL BE MADE FROM CENTERLINE OF THE MARKINGS. WHERE PARKING SPACES OR ACCESS AISLES ARE NOT ADJACENT TO ANOTHER PARKING SPACE OR ACCESS AISLES, MEASUREMENTS SHALL BE PERMITTED TO INCLUDE THE FULL WIDTH OF THE LINE DEFINING THE PARKING SPACE OR ACCESS AISLE.
3. PARKING ACCESS AISLES SHALL BE PART OF AN ACCESSIBLE ROUTE TO THE BUILDING OR FACILITY ENTRANCE AND SHALL COMPLY WITH PROVISIONS FOR ACCESSIBLE ROUTES. MARKED CROSSINGS SHALL BE PROVIDED WHERE THE ACCESSIBLE ROUTE MUST CROSS VEHICULAR TRAFFIC LANES. WHERE POSSIBLE, IT IS PREFERABLE THAT THE ACCESSIBLE ROUTE NOT PASS BEHIND PARKED VEHICLES.
4. TWO (2) ACCESSIBLE PARKING SPACES MAY SHARE A COMMON ACCESS AISLE.
5. ACCESS AISLES SHALL EXTEND THE FULL LENGTH OF THE PARKING SPACE THEY SERVE.
6. ACCESS AISLES SHALL BE MARKED SO AS TO DISCOURAGE PARKING IN THEM.
7. ACCESS AISLES SHALL NOT OVERLAP THE VEHICULAR WAY. ACCESS AISLES SHALL BE PERMITTED TO BE PLACED ON EITHER SIDE OF THE PARKING SPACE EXCEPT FOR ANGLED VAN PARKING SPACES WHICH SHALL HAVE ACCESS AISLES LOCATED ON THE PASSENGER SIDE OF THE PARKING SPACES.
8. FLOOR SURFACES OF PARKING SPACES AND ACCESS AISLES SERVING THEM SHALL BE STABLE, FIRM AND SLIP RESISTANT. ACCESS AISLES SHALL BE AT THE SAME LEVEL AS THE PARKING SPACES THEY SERVE. CHANGES IN LEVEL ARE NOT PERMITTED.
9. PARKING SPACES AND ACCESS AISLES SHALL BE LEVEL WITH SURFACE SLOPES NOT EXCEEDING 2.0% IN ALL DIRECTIONS.
10. PARKED VEHICLE OVERHANGS SHALL NOT REDUCE THE REQUIRED CLEAR WIDTH OF AN ACCESSIBLE ROUTE.
11. PARKING SPACES FOR VANS AND ACCESS AISLES AND VEHICULAR ROUTES SERVING THEM SHALL PROVIDE A VERTICAL CLEARANCE OF NINETY-EIGHT (98) INCHES MINIMUM. SIGNS SHALL BE PROVIDED AT ENTRANCES TO PARKING FACILITIES INFORMING DRIVERS OF CLEARANCES AND THE LOCATION OF VAN ACCESSIBLE PARKING SPACES.
12. EACH ACCESSIBLE PARKING SPACE SHALL BE PROVIDED WITH SIGNAGE DISPLAYING THE INTERNATIONAL SYMBOL OF ACCESSIBILITY. EACH ACCESS AISLE SHALL BE PROVIDED WITH SIGNAGE READING "NO PARKING ANYTIME". SIGNS SHALL BE INSTALLED AT A CLEAR HEIGHT OF BETWEEN SIXTY (60) INCHES AND EIGHTY-FOUR (84) INCHES ABOVE GRADE AND SHALL NOT INTERFERE WITH AN ACCESSIBLE ROUTE FROM AN ACCESS AISLE. SIGNS LOCATED WHERE THEY MAY BE HIT BY VEHICLES BEING PARKED SHALL BE INSTALLED WITH BOLLARD PROTECTION.
13. ACCESSIBLE PARKING SPACE, ACCESS AISLE STRIPING, AND INTERNATIONAL SYMBOL OF ACCESSIBILITY SHALL BE PAINTED BLUE.

PASSENGER LOADING ZONE NOTES:

1. PASSENGER LOADING ZONES SHALL PROVIDE VEHICULAR PULL-UP SPACE NINETY-SIX (96) INCHES WIDE MINIMUM AND TWENTY (20) FEET LONG MINIMUM.
2. PASSENGER LOADING ZONES SHALL PROVIDE A CLEARLY MARKED ACCESS AISLE THAT IS SIXTY (60) INCHES WIDE MINIMUM AND EXTENDS THE FULL LENGTH OF THE VEHICLE PULL-UP SPACE THEY SERVE.
3. ACCESS AISLE SHALL ADJOIN AN ACCESSIBLE ROUTE AND NOT OVERLAP THE VEHICULAR WAY.
4. VEHICLE PULL-UP SPACES AND ACCESS AISLES SERVING THEM SHALL BE LEVEL WITH SURFACE SLOPES NO EXCEEDING 2.0% IN ALL DIRECTIONS. ACCESS AISLES SHALL BE AT THE SAME LEVEL AS THE VEHICLE PULL-UP SPACE THEY SERVE. CHANGES IN LEVEL ARE NOT PERMITTED.
5. FLOOR SURFACES OF VEHICLE PULL-UP SPACES AND ACCESS AISLES SERVING THEM SHALL BE STABLE, FIRM AND SLIP RESISTANT.
6. VEHICLE PULL-UP SPACES, ACCESS AISLES SERVING THEM AND A VEHICULAR ROUTE FROM AN ENTRANCE TO THE PASSENGER LOADING ZONE, AND FROM THE PASSENGER LOADING ZONE TO A VEHICULAR EXIT SERVING THEM, SHALL PROVIDE A VERTICAL CLEARANCE OF ONE HUNDRED FOURTEEN (114) INCHES MINIMUM.

ACCESSIBLE ENTRANCE NOTES:

1. ACCESSIBLE ENTRANCES SHALL BE PROVIDED AS REQUIRED BY ADAAG AND APPLICABLE BLDG CODE REQUIREMENTS.

H2M architects + engineers

538 Broad Hollow Road, 4th Floor East
Melville, NY 11747
631.756.8000 • www.h2m.com
Architecture & Landscape Architecture: No Certificate Required
Engineering Certificate of Authorization No.: 0018178

CONSULTANTS:

MARK	DATE	DESCRIPTION

07/31/2024
Exp. Date

KEVIN M. MEDLER, R.A.
NY PROFESSIONAL ARCHITECT Lic. No. 038379
"ALTERATION OF THIS DOCUMENT EXCEPT BY A LICENSED PROFESSIONAL IS ILLEGAL"

DESIGNED BY:	DRAWN BY:	CHECKED BY:	REVIEWED BY:
CWP	DOD/NPO	CWP/KMM	

PROJECT No:	DATE:	SCALE:
WPSD 2203	MARCH 2025	AS SHOWN

CLIENT

WHITE PLAINS CITY SCHOOL DISTRICT

ADDITION AT WHITE PLAINS HIGH SCHOOL

550 NORTH STREET, WHITE PLAINS, NY 10605

66-22-00-01-0-016-030

CONTRACT

ALL CONTRACTS

STATUS

FINAL BID SET

SHEET TITLE

GENERAL ACCESSIBILITY REQUIREMENTS

DRAWING No.

G 122.00

C:\Users\ddesouza\Documents\WPSD2203_Central21_A_DDeSouzaD8TU8.rvt
3/6/2025 2:53:41 PM

WHITESTONE — RECORD OF SUBSURFACE EXPLORATION

Boring No.: B-1 — Page 1 of 2

Project:	White Plains High School Improvements	**WAI Project No.:**	GJ2219662.Y00
Location:	550 North Street; White Plains, Westchester County, NY	**Client:**	H2M Architects & Engineers
Surface Elevation:	± NS feet	**Date Started:**	10/10/2022
Termination Depth:	27.0 feet bgs	**Date Completed:**	10/10/2022
Proposed Location:	Building	**Logged By:**	MO
Drill / Test Method:	HSA / SPT	**Contractor:**	ECG
		Equipment:	AMS-9580

	Water Depth (feet bgs) | Elevation (feet)		Cave-In Depth (feet bgs) | Elevation (feet)
During:	9.0 (P) | NS		
At Completion:	--- | ---	At Completion:	--- | ---
24 Hours:	--- | ---	24 Hours:	--- | ---

Depth (feet)	No	Type	Blows Per 6"	Rec. (in.)	N	Depth (feet)	Strata	Description of Materials (Classification)	Remarks
						0.0			
						0.5	TOPSOIL	6" Topsoil	
0 - 2	S-1	X	2 - 2 - 2 - 2	15	4		GLACIAL DEPOSITS	Light Brown Silty Sand, Moist, Very Loose (SM)	
2 - 4	S-2	X	3 - 9 - 14 - 21	14	23	4.0		As Above, with Gravel, Medium Dense (SM)	
4 - 6	S-3	X	13 - 14 - 14 - 10	18	28	5.0		As Above (SM)	
6 - 8	S-4	X	10 - 11 - 11 - 9	18	22	8.0		As Above (SM)	
8 - 10	S-5	X	9 - 8 - 10 - 11	16	18	10.0		As Above, Wet (SM)	
10 - 12	S-6	X	5 - 15 - 16 - 21	18	31			As Above, Grayish-Brown, Dense (SM)	
15 - 15.9	S-7	X	37 - 50/5"	10	50/5"	15.0		As Above, Very Dense (SM)	
20 - 21.4	S-8	X	34 - 35 - 36 - 50/4"	-	71	20.0		As Above, Gray (SM)	
						25.0			

NOTES: bgs = below ground surface, NA = Not Applicable, NE = Not Encountered, NS = Not Surveyed, P = Perched

RECORD OF SUBSURFACE EXPLORATION 19662_Blogs 11/2/2022

WHITESTONE — RECORD OF SUBSURFACE EXPLORATION

Boring No.: B-1 — Page 2 of 2

Project:	White Plains High School Improvements	**WAI Project No.:**	GJ2219662.Y00
Location:	550 North Street; White Plains, Westchester County, NY	**Client:**	H2M Architects & Engineers
Surface Elevation:	± NS feet	**Date Started:**	10/10/2022
Termination Depth:	27.0 feet bgs	**Date Completed:**	10/10/2022
Proposed Location:	Building	**Logged By:**	MO
Drill / Test Method:	HSA / SPT	**Contractor:**	ECG
		Equipment:	AMS-9580

	Water Depth (feet bgs) | Elevation (feet)		Cave-In Depth (feet bgs) | Elevation (feet)
During:	9.0 (P) | NS		
At Completion:	--- | ---	At Completion:	--- | ---
24 Hours:	--- | ---	24 Hours:	--- | ---

Depth (feet)	No	Type	Blows Per 6"	Rec. (in.)	N	Depth (feet)	Strata	Description of Materials (Classification)	Remarks
						25.0			
25 - 25.4	S-9	X	50/4"	-	50/4"		GLACIAL DEPOSITS	Light Brown Poorly Graded Sand, Wet, Very Dense (SP)	
						27.0		Boring Log B-1 Terminated at a Depth of 27.0 Feet Below Ground Surface Due to Auger Refusal	Auger Refusal @ 27.0 fbgs
						30.0			
						35.0			
						40.0			
						45.0			
						50.0			

NOTES: bgs = below ground surface, NA = Not Applicable, NE = Not Encountered, NS = Not Surveyed, P = Perched

RECORD OF SUBSURFACE EXPLORATION 19662_Blogs 11/2/2022

WHITESTONE — RECORD OF SUBSURFACE EXPLORATION

Boring No.: B-2 — Page 1 of 2

Project:	White Plains High School Improvements	**WAI Project No.:**	GJ2219662.Y00
Location:	550 North Street; White Plains, Westchester County, NY	**Client:**	H2M Architects & Engineers
Surface Elevation:	± NS feet	**Date Started:**	10/10/2022
Termination Depth:	28.4 feet bgs	**Date Completed:**	10/10/2022
Proposed Location:	Building	**Logged By:**	MO
Drill / Test Method:	HSA / SPT	**Contractor:**	ECG
		Equipment:	AMS-9580

	Water Depth (feet bgs) | Elevation (feet)		Cave-In Depth (feet bgs) | Elevation (feet)
During:	10.0 (P) | NS		
At Completion:	--- | ---	At Completion:	--- | ---
24 Hours:	--- | ---	24 Hours:	--- | ---

Depth (feet)	No	Type	Blows Per 6"	Rec. (in.)	N	Depth (feet)	Strata	Description of Materials (Classification)	Remarks
						0.0			
						0.5	TOPSOIL	6" Topsoil	
0 - 2	S-1	X	1 - 1 - 1 - 2	15	2		GLACIAL DEPOSITS	Brown Silt, Moist, Soft (ML)	Qu = 0.5 tsf
2 - 4	S-2	X	3 - 2 - 1 - 3	14	3	4.0		As Above, Light Brown (ML)	Qu = 0.5 tsf
4 - 6	S-3	X	6 - 11 - 13 - 16	17	24	5.0		Brown Silty Sand with Gravel, Moist, Medium Dense (SM)	
6 - 8	S-4	X	12 - 13 - 17 - 16	18	30			As Above, Dense (SM)	
8 - 10	S-5	X	11 - 15 - 11 - 13	24	26	10.0		As Above, Very Moist, Medium Dense (SM)	
10 - 12	S-6	X	8 - 10 - 13 - 18	22	23			As Above, Wet (SM)	
15 - 17	S-7	X	32 - 37 - 43 - 50	24	60	15.0		Gray Poorly Graded Sand with Gravel, Moist, Very Dense (SP)	
20 - 22	S-8	X	14 - 15 - 21 - 21	16	36	20.0		Gray/Brown Silty Sand, Wet, Dense (SM)	
						25.0			

NOTES: bgs = below ground surface, NA = Not Applicable, NE = Not Encountered, NS = Not Surveyed, P = Perched

RECORD OF SUBSURFACE EXPLORATION 19662_Blogs 11/2/2022

WHITESTONE — RECORD OF SUBSURFACE EXPLORATION

Boring No.: B-2 — Page 2 of 2

Project:	White Plains High School Improvements	**WAI Project No.:**	GJ2219662.Y00
Location:	550 North Street; White Plains, Westchester County, NY	**Client:**	H2M Architects & Engineers
Surface Elevation:	± NS feet	**Date Started:**	10/10/2022
Termination Depth:	28.4 feet bgs	**Date Completed:**	10/10/2022
Proposed Location:	Building	**Logged By:**	MO
Drill / Test Method:	HSA / SPT	**Contractor:**	ECG
		Equipment:	AMS-9580

	Water Depth (feet bgs) | Elevation (feet)		Cave-In Depth (feet bgs) | Elevation (feet)
During:	10.0 (P) | NS		
At Completion:	--- | ---	At Completion:	--- | ---
24 Hours:	--- | ---	24 Hours:	--- | ---

Depth (feet)	No	Type	Blows Per 6"	Rec. (in.)	N	Depth (feet)	Strata	Description of Materials (Classification)	Remarks
						25.0			
25 - 25.8	S-9	X	27 - 50/3"	3	50/3"		GLACIAL DEPOSITS	Gray Sand with Gravel, Wet, Very Dense (SP)	
28 - 28.4	S-10	X	50/5"	4	50/5"	28.5		Gray Sand with Gravel, Wet, Very Dense (SP)	Auger Refusal @ 28.0 fbgs
								Boring Log B-2 Terminated at a Depth of 28.4 Feet Below Ground Surface Due to Auger and Spoon Refusal	Spoon Refusal @ 28.4 fbgs
						30.0			
						35.0			
						40.0			
						45.0			
						50.0			

NOTES: bgs = below ground surface, NA = Not Applicable, NE = Not Encountered, NS = Not Surveyed, P = Perched

RECORD OF SUBSURFACE EXPLORATION 19662_Blogs 11/2/2022

WHITESTONE — RECORD OF SUBSURFACE EXPLORATION

Boring No.: B-3 — Page 1 of 1

Project:	White Plains High School Improvements	**WAI Project No.:**	GJ2219662.Y00
Location:	550 North Street; White Plains, Westchester County, NY	**Client:**	H2M Architects & Engineers
Surface Elevation:	± NS feet	**Date Started:**	10/11/2022
Termination Depth:	4.0 feet bgs	**Date Completed:**	10/11/2022
Proposed Location:	Building	**Logged By:**	MO
Drill / Test Method:	HSA / SPT	**Contractor:**	ECG
		Equipment:	AMS-9580

	Water Depth (feet bgs) | Elevation (feet)		Cave-In Depth (feet bgs) | Elevation (feet)
During:	NE | ---		
At Completion:	NE | ---	At Completion:	--- | ---
24 Hours:	--- | ---	24 Hours:	--- | ---

Depth (feet)	No	Type	Blows Per 6"	Rec. (in.)	N	Depth (feet)	Strata	Description of Materials (Classification)	Remarks
						0.0			
						0.5	TOPSOIL	6" Topsoil	
0.5 - 2	S-1	X	2 - 4 - 7 - 17	14	11		GLACIAL DEPOSITS	Brown Silty Sand with Gravel, Moist, Medium Dense (SM)	
2 - 4	S-2	X	7 - 11 - 32 - 49	15	43	4.0		As Above, with Gravel (SM)	
						5.0		Boring Log B-3 Terminated at a Depth of 4.0 Feet Below Ground Surface Due to Auger Refusal	
						10.0			
						15.0			
						20.0			
						25.0			

NOTES: bgs = below ground surface, NA = Not Applicable, NE = Not Encountered, NS = Not Surveyed, P = Perched

RECORD OF SUBSURFACE EXPLORATION 19662_Blogs 11/2/2022

WHITESTONE — RECORD OF SUBSURFACE EXPLORATION

Boring No.: B-4 — Page 1 of 1

Project:	White Plains High School Improvements	**WAI Project No.:**	GJ2219662.Y00
Location:	550 North Street; White Plains, Westchester County, NY	**Client:**	H2M Architects & Engineers
Surface Elevation:	± NS feet	**Date Started:**	10/11/2022
Termination Depth:	12.0 feet bgs	**Date Completed:**	10/11/2022
Proposed Location:	Building	**Logged By:**	MO
Drill / Test Method:	HSA / SPT	**Contractor:**	ECG
		Equipment:	AMS-9580

	Water Depth (feet bgs) | Elevation (feet)		Cave-In Depth (feet bgs) | Elevation (feet)
During:	NE | ---		
At Completion:	NE | ---	At Completion:	--- | ---
24 Hours:	--- | ---	24 Hours:	--- | ---

Depth (feet)	No	Type	Blows Per 6"	Rec. (in.)	N	Depth (feet)	Strata	Description of Materials (Classification)	Remarks
						0.0			
						0.5	TOPSOIL	6" Topsoil	
0 - 2	S-1	X	1 - 1 - 1 - 2	13	2		GLACIAL DEPOSITS	Brown Silty Sand, Moist, Very Loose (SM)	
2 - 4	S-2	X	3 - 6 - 3 - 11	15	9			As Above, Loose (SM)	
4 - 6	S-3	X	12 - 11 - 10 - 10	12	21	5.0		As Above, Medium Dense (SM)	
6 - 8	S-4	X	12 - 10 - 10 - 10	14	20			As Above (SM)	
8 - 10	S-5	X	9 - 10 - 31 - 22	15	41	10.0		As Above, with Gravel, Dense (SM)	
10 - 11.9	S-6	X	32 - 26 - 16 - 50/5"	15	42			As Above (SM)	Auger Refusal @ 12.0 fbgs
						12.0		Boring Log B-4 Terminated at a Depth of 12.0 Feet Below Ground Surface Due to Auger and Spoon Refusal	Spoon Refusal @ 12.0 fbgs
						15.0			
						20.0			
						25.0			

NOTES: bgs = below ground surface, NA = Not Applicable, NE = Not Encountered, NS = Not Surveyed, P = Perched

RECORD OF SUBSURFACE EXPLORATION 19662_Blogs 11/2/2022

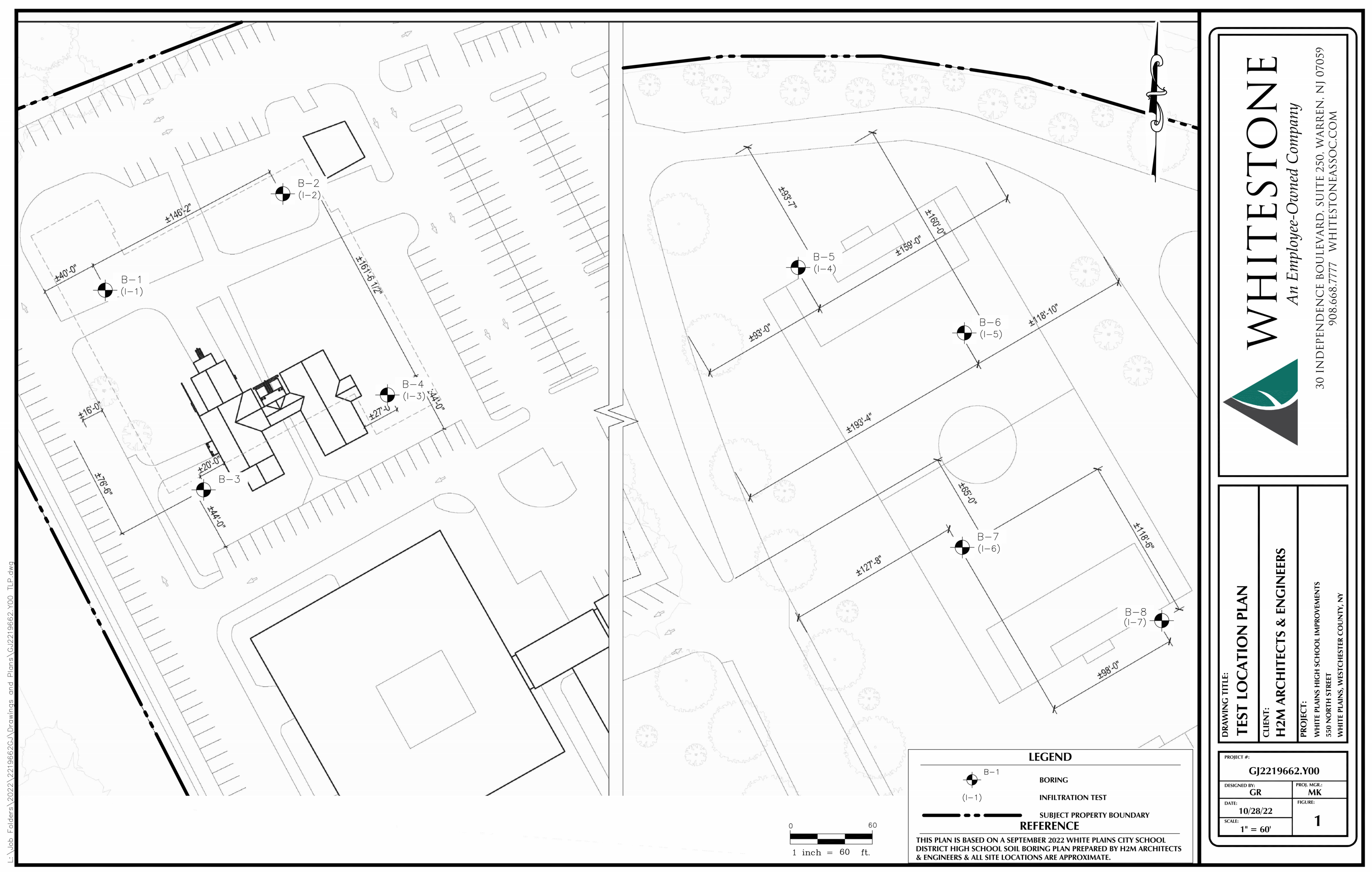

SUBSURFACE EXPLORATION DATA

FOR INFORMATION ONLY - NOT PART OF CONTRACT DOCUMENTS THE FOLLOWING DATA IS OFFERED SOLELY FOR THE PURPOSE OF PLACING BIDDERS IN RECEIPT OF INFORMATION AVAILABLE, AND IN NO EVENT IS TO BE CONSIDERED A PART OF CONTRACT DOCUMENTS. THE BIDDER MAY INTERPRET SUCH DATA ACCORDING TO HIS/HER OWN JUDGEMENT AND ACKNOWLEDGES THAT HE/SHE IS NOT RELYING UPON THE SAME AS ACCURATELY DESCRIBING THE SUBSURFACE CONDITIONS WHICH MAY BE FOUND TO EXIST. THE BIDDER FURTHER ACKNOWLEDGES THAT HE/SHE ASSUMES ALL RISK CONTINGENT UPON THE NATURE OF THE SUBSURFACE CONDITIONS TO BE ACTUALLY ENCOUNTERED BY HIM/HER IN PERFORMING THE WORK OF THE CONTRACT, EVEN THOUGH SUCH ACTUAL CONDITIONS MAY RESULT IN THE BIDDER PERFORMING MORE OR LESS WORK THAN HE/SHE ORIGINALLY ANTICIPATED.

H2M architects + engineers

538 Broad Hollow Road, 4th Floor East
Melville, NY 11747
631.756.8000 ▪ www.h2m.com
Architecture & Landscape Architecture: No Certificate Required
Engineering Certificate of Authorization No.: 0018178

CONSULTANTS:

MARK	DATE	DESCRIPTION

REGISTERED ARCHITECT — KEVIN MICHAEL MEDLER — 038379 — STATE OF NEW YORK

07/31/2024 Exp. Date

KEVIN M. MEDLER, R.A.
NY PROFESSIONAL ARCHITECT Lic. No. 038379
"ALTERATION OF THIS DOCUMENT EXCEPT BY A LICENSED PROFESSIONAL IS ILLEGAL"

DESIGNED BY:	DRAWN BY:	CHECKED BY:	REVIEWED BY:
CWP	DOD/NPO	CWP/KMM	

PROJECT No:	DATE:	SCALE:
WPSD 2203	MARCH 2025	AS SHOWN

CLIENT

WHITE PLAINS CITY SCHOOL DISTRICT

ADDITION AT WHITE PLAINS HIGH SCHOOL

550 NORTH STREET, WHITE PLAINS, NY 10605

66-22-00-01-0-016-030

CONTRACT

ALL CONTRACTS

STATUS

FINAL BID SET

SHEET TITLE

SOIL BORING INFORMATION (FOR REFERENCE ONLY)

DRAWING No.

SB 100.00

C:\Users\ddesouza\Documents\WPSD2203_Central21_A_DDeSouzaD8TU8.rvt

3/6/2025 2:53:53 PM

LEGEND

DESCRIPTION	SYMBOL
BENCHMARK	
DRAINAGE MANHOLE	
CATCH BASIN	
INLET	
INLET	
WATER MANHOLE	
WATER VALVE	
ROOF DRAIN/LEADER	
SANITARY MANHOLE	
CLEAN OUT	
ELECTRIC MANHOLE	
ELECTRIC RISER	ER
LIGHT	
PULL BOX	
UTILITY POLE/GUY POLE	
GUY WIRE	
GAS METER	GM
GAS VALVE	
GAS RISER	GR
IRRIGATION CONTROL BOX	
SIGN	
TWO POST SIGN	
MANHOLE	
BOLLARD	
EVERGREEN TREE	
DECIDUOUS TREE	
CURB	
DROP CURB	
GUIDE RAIL	
STORM DRAIN	D D
STORM DRAIN (QL-D)	D D
WATER MAIN	W W
WATER MAIN (QL-D)	W W
SANITARY SEWER	S
SANITARY SEWER (QL-D)	S S
UNDERGROUND GAS	G
UNDERGROUND GAS (QL-D)	G G
UNDERGROUND ELECTRIC	E E
UNDERGROUND ELECTRIC (QL-D)	E E
UNDERGROUND TELEPHONE	T T
UNDERGROUND TELEPHONE (QL-D)	T T
UNDERGROUND FIBER OPTIC	FO FO
OVERHEAD WIRES	OH OH
FENCE	X X
EDGE OF PAVEMENT	
CONTOUR	100
SPOT ELEVATION	280.0
HANDICAP PARKING STALL	tc 280.50 bc 280.00
TOP/BOT CURB GRADE	
ASPHALT PAVEMENT	
CONCRETE PAVEMENT	
DETECTABLE WARNING PAD	

UTILITY NOTES:

SUBSURFACE UTILITY ENGINEERING (SUE) QUALITY LEVELS OF SERVICE (ACCURACY)
ALL MARKOUT IS QUALITY LEVEL B UNLESS OTHERWISE NOTED.

QL-A = QUALITY LEVEL A (TEST HOLES)
DATA TYPICALLY ACQUIRED AT ONE POINT ON AN UNDERGROUND UTILITY FEATURE EXPOSED BY AIR VACUUM EXCAVATION OR OTHER MEANS. THE HORIZONTAL AND VERTICAL LOCATION OF THIS REFERENCE POINT IS ACQUIRED AND REPORTED TO ACCEPTABLE SURVEY TOLERANCES. THE ACQUIRED DATA FULFILLS SECTION 5.4.5 ON PAGE 6 OF ASCE STANDARD 38-02.

QL-B = QUALITY LEVEL B (UTILITY DESIGNATION)
DEPICTION OF AN UNDERGROUND UTILITY LINE ESTABLISHED BY SENSING THE LOCATION WITH ELECTRONIC INSTRUMENTATION. LINEWORK AND UTILITY SURFACE FEATURES ARE ACQUIRED BY SURVEYING POINTS ALONG ALIGNMENT TO ACCEPTABLE SURVEY TOLERANCES.

QL-C = QUALITY LEVEL C (RECORDS PLOTTING)
UTILITY INFORMATION OBTAINED FROM RECORD INFORMATION AND PLOTTED TO CORRELATE WITH SURFACE UTILITY FEATURES WHICH HAVE BEEN SURVEY LOCATED AND ACCURATELY REDUCED ON TO DESIGN/CONSTRUCTION DOCUMENTS.

QL-D = QUALITY LEVEL D (RECORDS DRAFTING)
DEPICTION OF UNDERGROUND UTILITY LINES BY TRANSPOSITION FROM UTILITY RECORDS OR PLACED FROM VERBAL RECOLLECTIONS WITHOUT BENEFIT OF SURVEYED SURFACE FEATURES. ACCURACY OF INFORMATION IS QUESTIONABLE.

EOI
END OF INFORMATION PERTAINS TO THE LOSS OF SIGNAL THAT HAS BEEN APPLIED TO AN UNDERGROUND UTILITY AND THEN DETECTED TO ELECTRONICALLY LOCATE THE UTILITY. COMMONLY FOUND WHERE UTILITIES CHANGE TO NON-CONDUCTIVE MATERIALS, ARE CUT OR AT END OF UTILITY.

EXISTING CONDITIONS NOTES:

1. EXISTING SURVEY PREPARED BY H2M ARCHITECTS + ENGINEERS. DATED AUGUST 4, 2022. ELEVATIONS REFER TO N.A.V.D. 1988. ALL COUNTOURS SHOWN BEYOND CUBLINE ALONG NORTH STREET WERE OBTAIN UTILIZING WESTCHESTER COUNTY GIS (2-FOOT CONTOURS).
2. MARKOUT OF UNDERGROUND UTILITIES COMPLETED BY LEXIS GROUP, LLC, DATED AUGUST, 2022.
3. BENCHMARK 1 - (NAIL SET IN POLE, NORTH OF EXISTING TWO-STORY BUILDING, ELEVATION = 285.60). BENCHMARK 2 - (SQUARE CUT IN LIGHT POLE, SOUTHEAST OF EXISTING TWO-STORY BUILDING, ELEVATION = 290.32). ELEVATIONS REFER TO N.A.V.D. 1988.
4. LOCATION OF UNDERGROUND UTILITIES AND STRUCTURES BOTH PUBLIC AND CUSTOMER OWNED, WERE OBTAINED FROM EITHER OLD MAPS, SURVEYS, DRAWINGS/RECORDS SUPPLIED BY OTHERS AND/OR UTILITY MARKOUT. THE OWNER AND ENGINEER DO NOT GUARANTEE OR ACCEPT RESPONSIBILITY FOR ANY DAMAGE TO SUCH FACILITIES DUE TO DISCREPANCIES IN LOCATION AND SIZE SHOWN ON THE PLANS OR THOSE UTILITIES AND STRUCTURES NOT SHOWN.

H2M architects + engineers
538 Broad Hollow Road, 4th Floor East
Melville, NY 11747
631.756.8000 • www.h2m.com
NY Architecture & Landscape Architecture: No Certificate Required
NY Engineering Certificate of Authorization No. 0018438

CONSULTANTS:

MARK	DATE	DESCRIPTION

STATE OF NEW YORK · MATTHEW RONALD MOHLIN · 071569 · LICENSED PROFESSIONAL ENGINEER

30/09/2026
EXP. DATE

MATTHEW R. MOHLIN, P.E.
NY PROFESSIONAL ENGINEER Lic. No. 071569
"IN ACCORDANCE WITH ARTICLE 145, SECTION 7209 OF THE NYS EDUCATION LAW, ALTERATION OF THIS DOCUMENT EXCEPT BY LICENSE PROFESSIONAL IS ILLEGAL"

DESIGNED BY:	DRAWN BY:	CHECKED BY:	REVIEWED BY:
SFP	SFP/KMG		MRM
PROJECT No.: WPSD2203	DATE: MARCH 2025		SCALE: AS SHOWN

CLIENT
White Plains City School District

ADDITION AT WHITE PLAINS HIGH SCHOOL

White Plains Public Schools · WP · REAL LIFE LEARNING

550 NORTH STREET
WHITE PLAINS, NY 10605

SED 66-22-00-01-0-016-030

CONTRACT
CONTRACT C
CIVIL / SITE CONSTRUCTION

STATUS
FINAL BID DOCUMENT

SHEET TITLE
EXISTING CONDITIONS PLAN

DRAWING No.
V 100.00

X:\WPSD (White Plains Central School District) - 1690\WPSD 2203 - JHS Addition\03\BIM\CAD\Construction\ARP_LYO3 EXISTING CONDITIONS PLAN.dwg Last Modified: Feb 21, 2025 - 2:17pm Plotted on: Feb 21, 2025 - 2:18pm By spalers

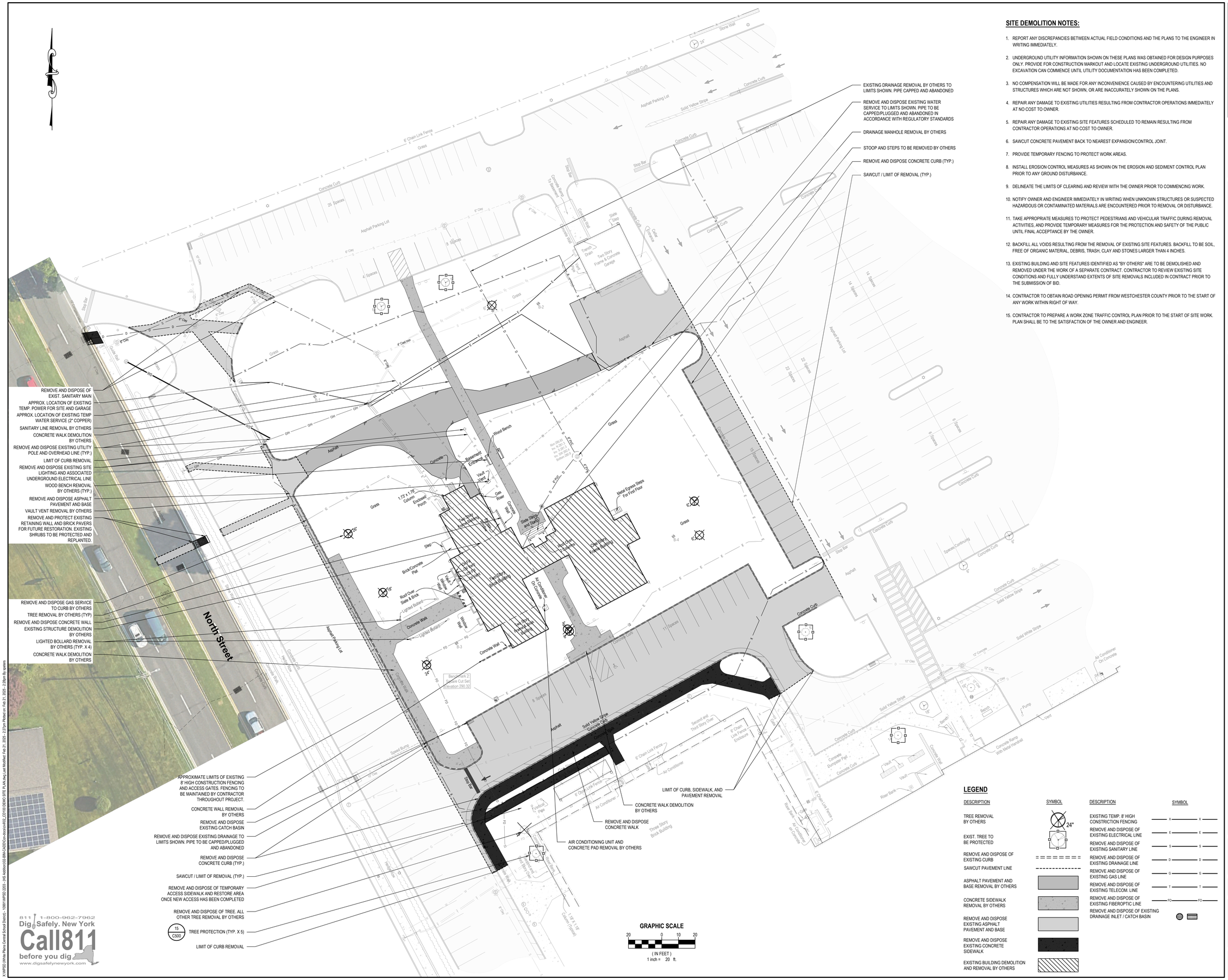

SITE DEMOLITION NOTES:

1. REPORT ANY DISCREPANCIES BETWEEN ACTUAL FIELD CONDITIONS AND THE PLANS TO THE ENGINEER IN WRITING IMMEDIATELY.
2. UNDERGROUND UTILITY INFORMATION SHOWN ON THESE PLANS WAS OBTAINED FOR DESIGN PURPOSES ONLY. PROVIDE FOR CONSTRUCTION MARKOUT AND LOCATE EXISTING UNDERGROUND UTILITIES. NO EXCAVATION CAN COMMENCE UNTIL UTILITY DOCUMENTATION HAS BEEN COMPLETED.
3. NO COMPENSATION WILL BE MADE FOR ANY INCONVENIENCE CAUSED BY ENCOUNTERING UTILITIES AND STRUCTURES WHICH ARE NOT SHOWN, OR ARE INACCURATELY SHOWN ON THE PLANS.
4. REPAIR ANY DAMAGE TO EXISTING UTILITIES RESULTING FROM CONTRACTOR OPERATIONS IMMEDIATELY AT NO COST TO OWNER.
5. REPAIR ANY DAMAGE TO EXISTING SITE FEATURES SCHEDULED TO REMAIN RESULTING FROM CONTRACTOR OPERATIONS AT NO COST TO OWNER.
6. SAWCUT CONCRETE PAVEMENT BACK TO NEAREST EXPANSION/CONTROL JOINT.
7. PROVIDE TEMPORARY FENCING TO PROTECT WORK AREAS.
8. INSTALL EROSION CONTROL MEASURES AS SHOWN ON THE EROSION AND SEDIMENT CONTROL PLAN PRIOR TO ANY GROUND DISTURBANCE.
9. DELINEATE THE LIMITS OF CLEARING AND REVIEW WITH THE OWNER PRIOR TO COMMENCING WORK.
10. NOTIFY OWNER AND ENGINEER IMMEDIATELY IN WRITING WHEN UNKNOWN STRUCTURES OR SUSPECTED HAZARDOUS OR CONTAMINATED MATERIALS ARE ENCOUNTERED PRIOR TO REMOVAL OR DISTURBANCE.
11. TAKE APPROPRIATE MEASURES TO PROTECT PEDESTRIANS AND VEHICULAR TRAFFIC DURING REMOVAL ACTIVITIES, AND PROVIDE TEMPORARY MEASURES FOR THE PROTECTION AND SAFETY OF THE PUBLIC UNTIL FINAL ACCEPTANCE BY THE OWNER.
12. BACKFILL ALL VOIDS RESULTING FROM THE REMOVAL OF EXISTING SITE FEATURES. BACKFILL TO BE SOIL, FREE OF ORGANIC MATERIAL, DEBRIS, TRASH, CLAY AND STONES LARGER THAN 4 INCHES.
13. EXISTING BUILDING AND SITE FEATURES IDENTIFIED AS "BY OTHERS" ARE TO BE DEMOLISHED AND REMOVED UNDER THE WORK OF A SEPARATE CONTRACT. CONTRACTOR TO REVIEW EXISTING SITE CONDITIONS AND FULLY UNDERSTAND EXTENTS OF SITE REMOVALS INCLUDED IN CONTRACT PRIOR TO THE SUBMISSION OF BID.
14. CONTRACTOR TO OBTAIN ROAD OPENING PERMIT FROM WESTCHESTER COUNTY PRIOR TO THE START OF ANY WORK WITHIN RIGHT OF WAY.
15. CONTRACTOR TO PREPARE A WORK ZONE TRAFFIC CONTROL PLAN PRIOR TO THE START OF SITE WORK. PLAN SHALL BE TO THE SATISFACTION OF THE OWNER AND ENGINEER.

LEGEND

DESCRIPTION	SYMBOL
TREE REMOVAL BY OTHERS	24"
EXIST. TREE TO BE PROTECTED	
REMOVE AND DISPOSE OF EXISTING CURB	
SAWCUT PAVEMENT LINE	
ASPHALT PAVEMENT AND BASE REMOVAL BY OTHERS	
CONCRETE SIDEWALK REMOVAL BY OTHERS	
REMOVE AND DISPOSE EXISTING ASPHALT PAVEMENT AND BASE	
REMOVE AND DISPOSE EXISTING CONCRETE SIDEWALK	
EXISTING BUILDING DEMOLITION AND REMOVAL BY OTHERS	

DESCRIPTION	SYMBOL
EXISTING TEMP. 8' HIGH CONSTRICTION FENCING	X X
REMOVE AND DISPOSE OF EXISTING ELECTRICAL LINE	E E
REMOVE AND DISPOSE OF EXISTING SANITARY LINE	S S
REMOVE AND DISPOSE OF EXISTING DRAINAGE LINE	D D
REMOVE AND DISPOSE OF EXISTING GAS LINE	G G
REMOVE AND DISPOSE OF EXISTING TELECOM. LINE	T T
REMOVE AND DISPOSE OF EXISTING FIBEROPTIC LINE	FO FO
REMOVE AND DISPOSE OF EXISTING DRAINAGE INLET / CATCH BASIN	

GRAPHIC SCALE

20 0 10 20

(IN FEET)
1 inch = 20 ft.

H2M architects + engineers

538 Broad Hollow Road, 4th Floor East
Melville, NY 11747
631.756.8000 • www.h2m.com
NY Architecture & Landscape Architecture: No Certificate Required
NY Engineering Certificate of Authorization No. 0018438

CONSULTANTS:

MARK	DATE	DESCRIPTION

STATE OF NEW YORK · MATTHEW RONALD MOHLIN · 071569 · LICENSED PROFESSIONAL ENGINEER

30/09/2026
EXP. DATE

MATTHEW R. MOHLIN, P.E.
NY PROFESSIONAL ENGINEER Lic. No. 071569

"IN ACCORDANCE WITH ARTICLE 145, SECTION 7209 OF THE NYS EDUCATION LAW, ALTERATION OF THIS DOCUMENT EXCEPT BY LICENSE PROFESSIONAL IS ILLEGAL"

DESIGNED BY:	DRAWN BY:	CHECKED BY:	REVIEWED BY:
SFP	SFP/KMG		MRM
PROJECT No.: WPSD2203	DATE: MARCH 2025		SCALE: AS SHOWN

CLIENT

White Plains City School District

ADDITION AT WHITE PLAINS HIGH SCHOOL

White Plains Public Schools · WPS · REAL LIFE LEARNING

550 NORTH STREET
WHITE PLAINS, NY 10605

SED 66-22-00-01-0-016-030

CONTRACT

CONTRACT C
CIVIL / SITE CONSTRUCTION

STATUS

FINAL BID DOCUMENT

SHEET TITLE

DEMOLITION SITE PLAN

DRAWING No.

CD 100.00

X:\WPSD (White Plains Central School District) - 1690\WPSD 2203 - JHS Addition\02.BIM-CAD\Core-docs\ADZ_CD100 DEMO SITE PLAN.dwg Last Modified: Feb 21, 2025 - 2:27pm Plotted on: Feb 21, 2025 - 2:28pm By spowers

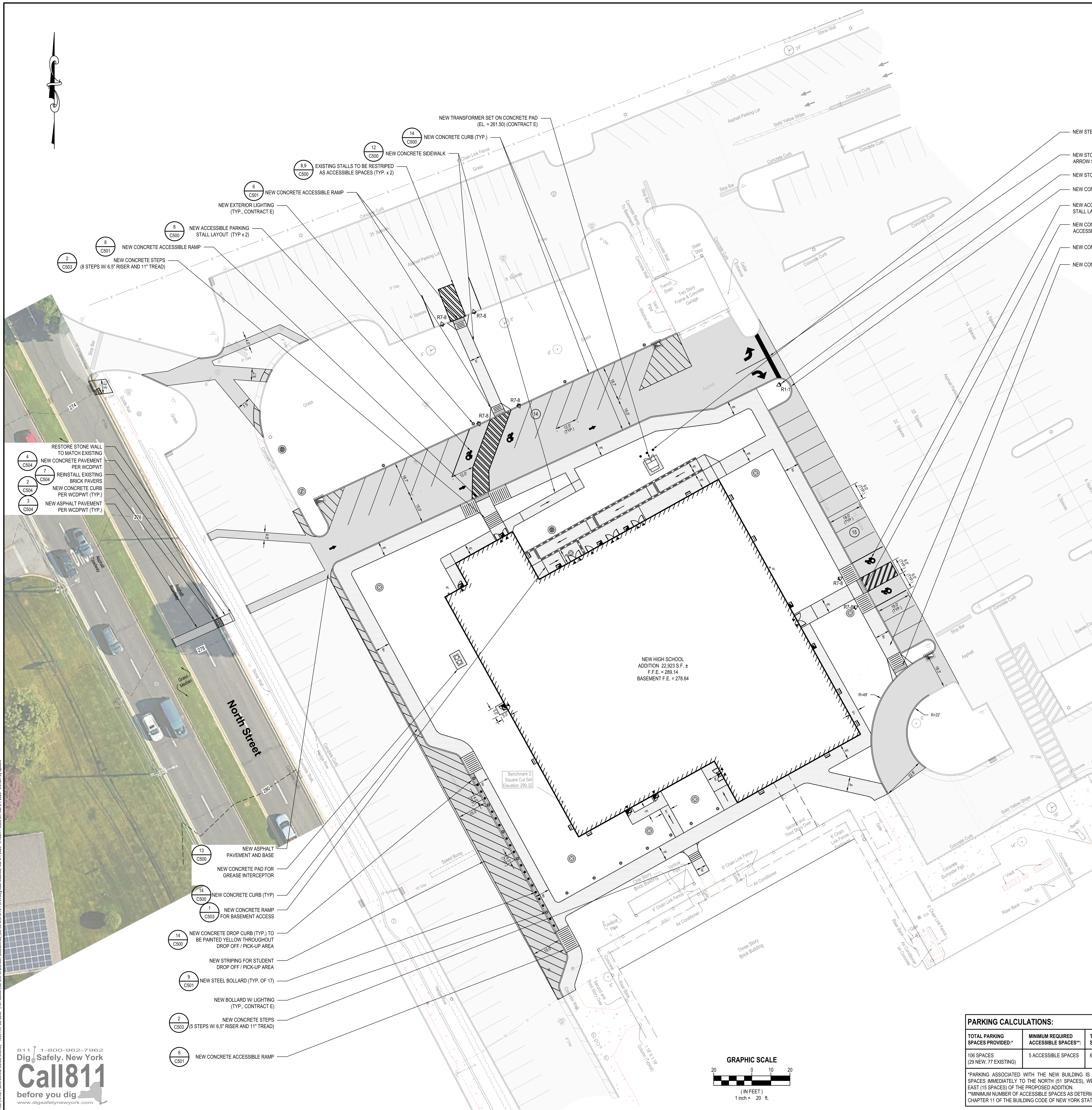

SIGN LEGEND

DESCRIPTION	SYMBOL
R1-1 ON-SITE (24x24) ROADWAY (30x30)	STOP
R7-8 (12x18)	RESERVED PARKING

LEGEND

DESCRIPTION	SYMBOL
CURB	
RETAINING WALL	
CONCRETE DROP CURB	
DECORATIVE FENCE	
ASPHALT PAVEMENT	
CONCRETE PAVEMENT SIDEWALK	
DETECTABLE WARNING SIDEWALK	
SIGN	
DOOR	
CLEAN OUT	
CATCH BASIN	
FIELD INLET	
YARD INLET	
BOLLARD	
HANDICAP RAMP	
PARKING STALL COUNT	12
SITE LIGHTING FEATURE	
SITE LIGHTING FEATURE	

PARKING CALCULATIONS:

TOTAL PARKING SPACES PROVIDED:*	MINIMUM REQUIRED ACCESSIBLE SPACES**:	TOTAL ACCESSIBLE SPACES PROVIDED:
106 SPACES (29 NEW, 77 EXISTING)	5 ACCESSIBLE SPACES	6 ACCESSIBLE SPACES

*PARKING ASSOCIATED WITH THE NEW BUILDING IS CALCULATED AS ALL SPACES IMMEDIATELY TO THE NORTH (51 SPACES), WEST (40 SPACES), AND EAST (15 SPACES) OF THE PROPOSED ADDITION.
**MINIMUM NUMBER OF ACCESSIBLE SPACES AS DETERMINED BY TABLE 1106.1, CHAPTER 11 OF THE BUILDING CODE OF NEW YORK STATE

GRAPHIC SCALE
20 0 10 20
(IN FEET)
1 inch = 20 ft.

SITE PLAN NOTES:

1. INSPECT THE SITE PRIOR TO SUBMISSION OF BIDS AND MAKE NO ADDITIONAL CLAIMS REGARDING SITE CONDITIONS THEREAFTER.
2. NOTIFY THE OWNER AND H2M (TELEPHONE 631-756-8000) AT LEAST 48 HOURS PRIOR TO THE COMMENCEMENT OF THE WORK. THE SAME NOTICE SHALL BE REQUIRED WHEN RESUMING WORK AFTER ANY STOPPAGE OR DELAY.
3. COMPLETE ALL SURVEY AND STAKEOUT AS REQUIRED TO PROPERLY COMPLETE THE WORK.
4. PERFORM DAILY CLEANUP OPERATIONS INCLUDING REMOVAL OF DEBRIS AND EXCESS CONSTRUCTION MATERIAL, AND DRIVEWAY/STREET CLEANING TO THE SATISFACTION OF THE OWNER.
5. DURING ALL NON-WORKING HOURS, STORE ALL EQUIPMENT AND MATERIALS WITHIN AN AREA DESIGNATED BY THE OWNER AT THE PROJECT SITE.
6. ALL CURB DIMENSIONS SHOWN REFER TO THE FACE OF CURB.
7. ALL CONSTRUCTION TO CONFORM WITH ALL APPLICABLE FEDERAL, STATE AND LOCAL CODE REQUIREMENTS.
8. COORDINATE CONSTRUCTION ACTIVITIES WITH OWNER TO MINIMIZE INTERRUPTION TO THE OWNER'S OPERATIONS.
9. RESTORE SURROUNDING AREAS DAMAGED OR DISTURBED DURING CONSTRUCTION. RESTORE TO NEW CONDITIONS AT NO ADDITIONAL COST TO THE OWNER.
10. RESTORE ALL DISTURBED GRASS AREAS AND ALL AREAS NOT SPECIFICALLY IDENTIFIED FOR OTHER IMPROVEMENTS WITH 4 INCHES OF TOPSOIL AND SEED.
11. REMOVE ALL ASPHALT FROM EXISTING CASTINGS.
12. SEAL ALL JOINTS BETWEEN NEW ASPHALT AND EXISTING ASPHALT WITH HOT ASPHALT CEMENT.

811 1-800-962-7962 Dig Safely. New York
Call811 before you dig
www.digsafelynewyork.com

X:\WPSD (White Plains Central School District) - 10991\WPSD 2203 - (HS Addition)\02-BIM-CADD\Con-docs\civil\03_CS100 DIM SITE PLAN.dwg Last Modified: Mar 21, 2025 - 9:49am Plotted on: Mar 21, 2025 - 9:51am By speters

H2M architects + engineers
538 Broad Hollow Road, 4th Floor East
Melville, NY 11747
631.756.8000 • www.h2m.com
NY Architecture & Landscape Architecture: No Certificate Required
NY Engineering Certificate of Authorization No. 0018438

CONSULTANTS:

MARK	DATE	DESCRIPTION

STATE OF NEW YORK · MATTHEW RONALD MOHLIN · 071569 · LICENSED PROFESSIONAL ENGINEER
MATTHEW R. MOHLIN, P.E.
NY PROFESSIONAL ENGINEER Lic. No. 071569
30/09/2026 EXP. DATE
"IN ACCORDANCE WITH ARTICLE 145, SECTION 7209 OF THE NYS EDUCATION LAW, ALTERATION OF THIS DOCUMENT EXCEPT BY LICENSE PROFESSIONAL IS ILLEGAL"

DESIGNED BY: SFP	DRAWN BY: SFP/KMG	CHECKED BY:	REVIEWED BY: MRM
PROJECT No.: WPSD2203	DATE: MARCH 2025	SCALE: AS SHOWN	

CLIENT
White Plains City School District

ADDITION AT WHITE PLAINS HIGH SCHOOL

550 NORTH STREET
WHITE PLAINS, NY 10605

SED 66-22-00-01-0-016-030

CONTRACT
CONTRACT C
CIVIL / SITE CONSTRUCTION

STATUS
FINAL BID DOCUMENT

SHEET TITLE
DIMENSIONAL SITE PLAN

DRAWING No.
CS 100.00

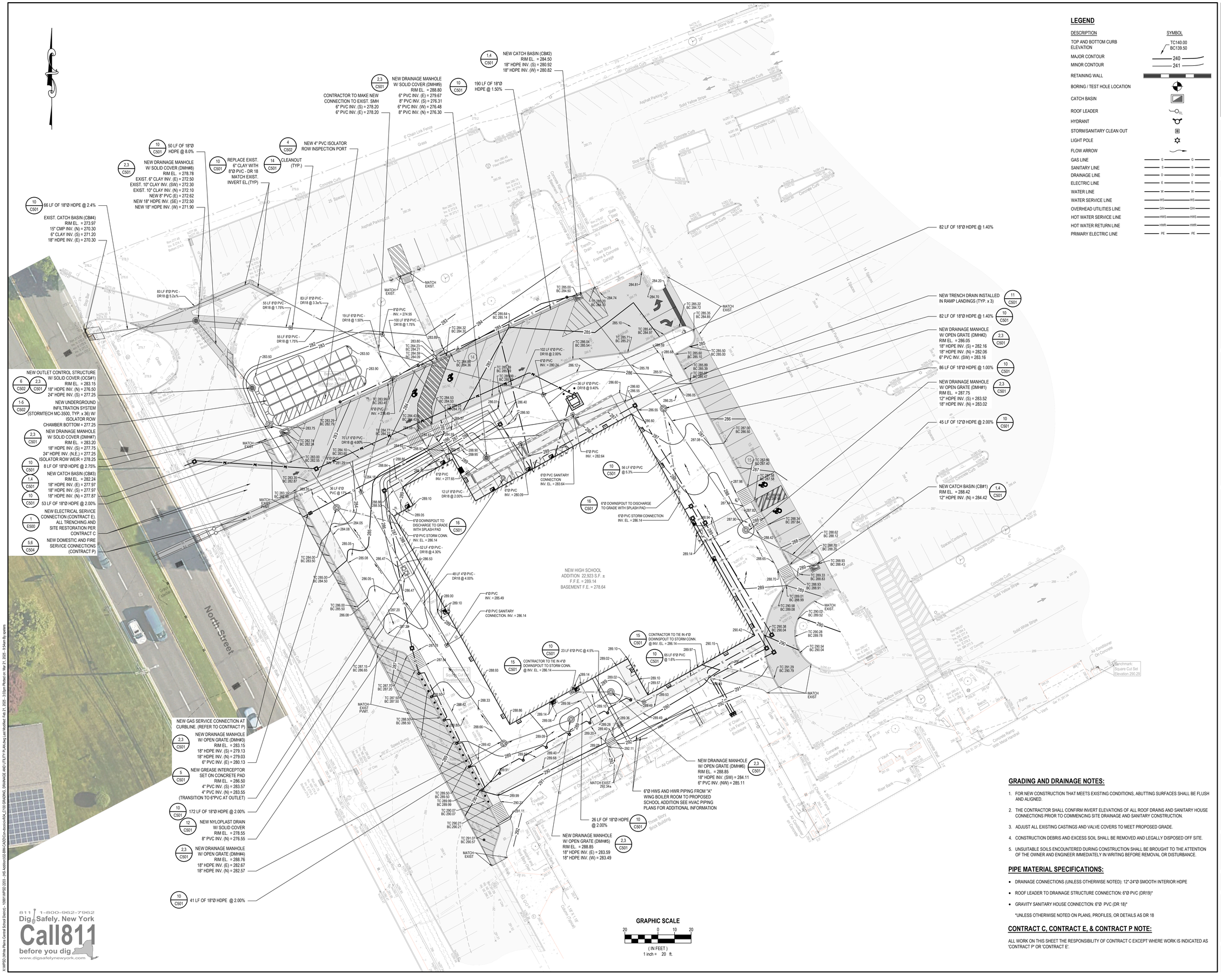

LEGEND

DESCRIPTION	SYMBOL
TOP AND BOTTOM CURB ELEVATION	TC140.00 BC139.50
MAJOR CONTOUR	240
MINOR CONTOUR	241
RETAINING WALL	
BORING / TEST HOLE LOCATION	
CATCH BASIN	
ROOF LEADER	RL
HYDRANT	
STORM/SANITARY CLEAN OUT	
LIGHT POLE	
FLOW ARROW	
GAS LINE	G
SANITARY LINE	S
DRAINAGE LINE	D
ELECTRIC LINE	E
WATER LINE	W
WATER SERVICE LINE	WS
OVERHEAD UTILITIES LINE	OH
HOT WATER SERVICE LINE	HWS
HOT WATER RETURN LINE	HWR
PRIMARY ELECTRIC LINE	PE

GRADING AND DRAINAGE NOTES:

1. FOR NEW CONSTRUCTION THAT MEETS EXISTING CONDITIONS, ABUTTING SURFACES SHALL BE FLUSH AND ALIGNED.
2. THE CONTRACTOR SHALL CONFIRM INVERT ELEVATIONS OF ALL ROOF DRAINS AND SANITARY HOUSE CONNECTIONS PRIOR TO COMMENCING SITE DRAINAGE AND SANITARY CONSTRUCTION.
3. ADJUST ALL EXISTING CASTINGS AND VALVE COVERS TO MEET PROPOSED GRADE.
4. CONSTRUCTION DEBRIS AND EXCESS SOIL SHALL BE REMOVED AND LEGALLY DISPOSED OFF SITE.
5. UNSUITABLE SOILS ENCOUNTERED DURING CONSTRUCTION SHALL BE BROUGHT TO THE ATTENTION OF THE OWNER AND ENGINEER IMMEDIATELY IN WRITING BEFORE REMOVAL OR DISTURBANCE.

PIPE MATERIAL SPECIFICATIONS:

- DRAINAGE CONNECTIONS (UNLESS OTHERWISE NOTED): 12"-24"Ø SMOOTH INTERIOR HDPE
- ROOF LEADER TO DRAINAGE STRUCTURE CONNECTION: 6"Ø PVC (DR19)*
- GRAVITY SANITARY HOUSE CONNECTION: 6"Ø PVC (DR 18)*

*UNLESS OTHERWISE NOTED ON PLANS, PROFILES, OR DETAILS AS DR 18

CONTRACT C, CONTRACT E, & CONTRACT P NOTE:

ALL WORK ON THIS SHEET THE RESPONSIBILITY OF CONTRACT C EXCEPT WHERE WORK IS INDICATED AS "CONTRACT P' OR 'CONTRACT E'.

811 1-800-962-7962 Dig Safely. New York Call811 before you dig www.digsafelynewyork.com

H2M architects + engineers
538 Broad Hollow Road, 4th Floor East
Melville, NY 11747
631.756.8000 • www.h2m.com
NY Architecture & Landscape Architecture: No Certificate Required
NY Engineering Certificate of Authorization No. 0018438

CONSULTANTS:

MARK	DATE	DESCRIPTION

STATE OF NEW YORK · MATTHEW RONALD MOHLIN · 071569 · LICENSED PROFESSIONAL ENGINEER

MATTHEW R. MOHLIN, P.E.
NY PROFESSIONAL ENGINEER Lic. No. 071569

30/09/2026 EXP. DATE

"IN ACCORDANCE WITH ARTICLE 145, SECTION 7209 OF THE NYS EDUCATION LAW, ALTERATION OF THIS DOCUMENT EXCEPT BY LICENSE PROFESSIONAL IS ILLEGAL"

DESIGNED BY:	DRAWN BY:	CHECKED BY:	REVIEWED BY:
SFP	SFP/KMG		MRM

PROJECT No.:	DATE:	SCALE:
WPSD2203	MARCH 2025	AS SHOWN

CLIENT

White Plains City School District

ADDITION AT WHITE PLAINS HIGH SCHOOL

White Plains Public Schools · WP · REAL LIFE LEARNING

550 NORTH STREET
WHITE PLAINS, NY 10605

SED 66-22-00-01-0-016-030

CONTRACT

CONTRACT C
CIVIL / SITE CONSTRUCTION

STATUS

FINAL BID DOCUMENT

SHEET TITLE

GRADING, DRAINAGE AND UTILITY PLAN

DRAWING No.

C 100.00

X:\WPSD (White Plains Central School District) - 1091\WPSD 2203 - JHS Addition\08-BIM-CADD\Civil-docs\WA_C100 GRADING, DRAINAGE AND UTILITY PLAN.dwg Last Modified: Feb 21, 2025 - 3:10pm Plotted on: Mar 21, 2025 - 9:54am By speters

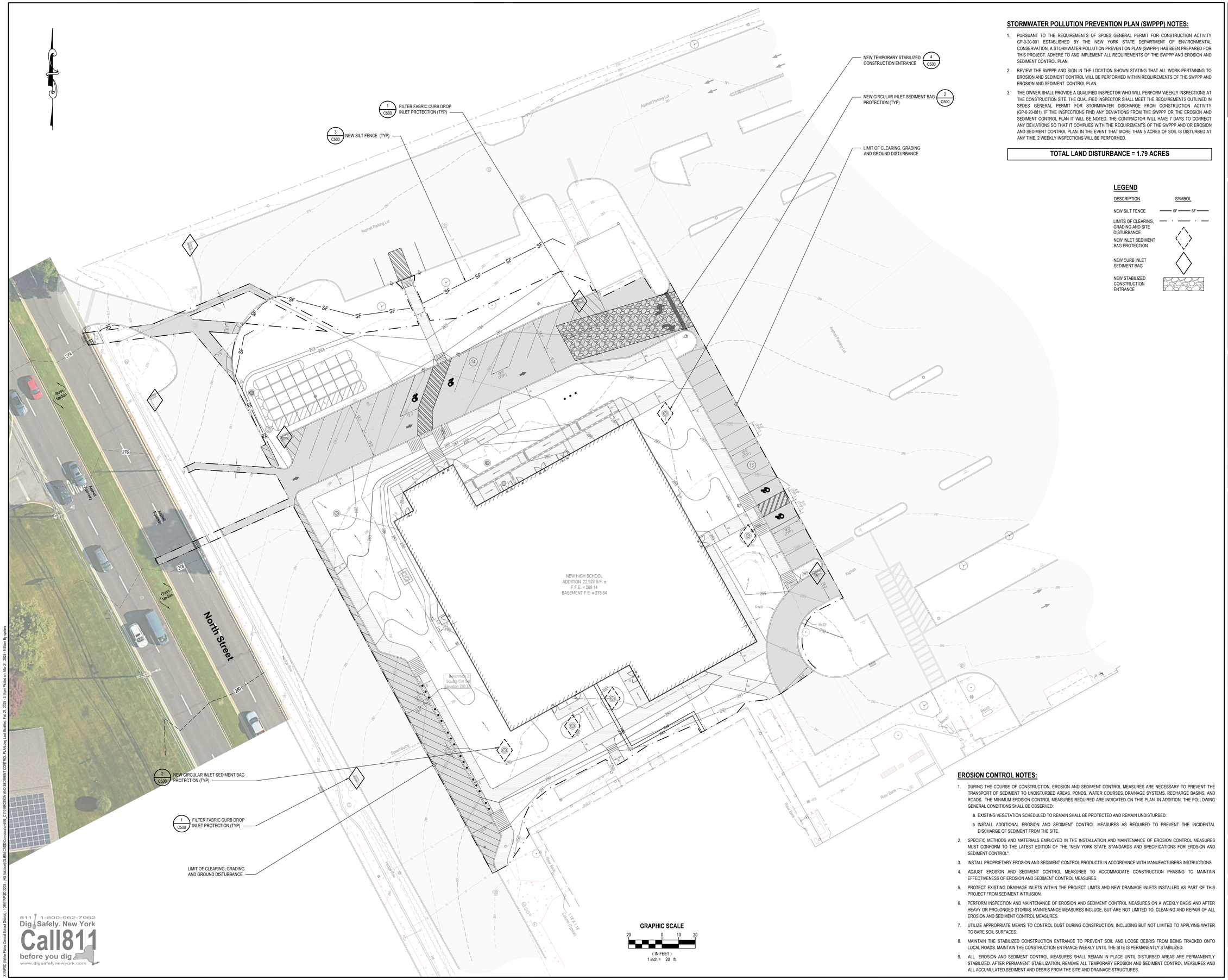

STORMWATER POLLUTION PREVENTION PLAN (SWPPP) NOTES:

1. PURSUANT TO THE REQUIREMENTS OF SPDES GENERAL PERMIT FOR CONSTRUCTION ACTIVITY GP-0-20-001 ESTABLISHED BY THE NEW YORK STATE DEPARTMENT OF ENVIRONMENTAL CONSERVATION, A STORMWATER POLLUTION PREVENTION PLAN (SWPPP) HAS BEEN PREPARED FOR THIS PROJECT. ADHERE TO AND IMPLEMENT ALL REQUIREMENTS OF THE SWPPP AND EROSION AND SEDIMENT CONTROL PLAN.
2. REVIEW THE SWPPP AND SIGN IN THE LOCATION SHOWN STATING THAT ALL WORK PERTAINING TO EROSION AND SEDIMENT CONTROL WILL BE PERFORMED WITHIN REQUIREMENTS OF THE SWPPP AND EROSION AND SEDIMENT CONTROL PLAN.
3. THE OWNER SHALL PROVIDE A QUALIFIED INSPECTOR WHO WILL PERFORM WEEKLY INSPECTIONS AT THE CONSTRUCTION SITE. THE QUALIFIED INSPECTOR SHALL MEET THE REQUIREMENTS OUTLINED IN SPDES GENERAL PERMIT FOR STORMWATER DISCHARGE FROM CONSTRUCTION ACTIVITY (GP-0-20-001). IF THE INSPECTIONS FIND ANY DEVIATIONS FROM THE SWPPP OR THE EROSION AND SEDIMENT CONTROL PLAN IT WILL BE NOTED. THE CONTRACTOR WILL HAVE 7 DAYS TO CORRECT ANY DEVIATIONS SO THAT IT COMPLIES WITH THE REQUIREMENTS OF THE SWPPP AND OR EROSION AND SEDIMENT CONTROL PLAN. IN THE EVENT THAT MORE THAN 5 ACRES OF SOIL IS DISTURBED AT ANY TIME, 2 WEEKLY INSPECTIONS WILL BE PERFORMED.

TOTAL LAND DISTURBANCE = 1.79 ACRES

LEGEND

DESCRIPTION	SYMBOL
NEW SILT FENCE	—— SF —— SF ——
LIMITS OF CLEARING, GRADING AND SITE DISTURBANCE	· · —— · ·
NEW INLET SEDIMENT BAG PROTECTION	
NEW CURB INLET SEDIMENT BAG	
NEW STABILIZED CONSTRUCTION ENTRANCE	

EROSION CONTROL NOTES:

1. DURING THE COURSE OF CONSTRUCTION, EROSION AND SEDIMENT CONTROL MEASURES ARE NECESSARY TO PREVENT THE TRANSPORT OF SEDIMENT TO UNDISTURBED AREAS, PONDS, WATER COURSES, DRAINAGE SYSTEMS, RECHARGE BASINS, AND ROADS. THE MINIMUM EROSION CONTROL MEASURES REQUIRED ARE INDICATED ON THIS PLAN. IN ADDITION, THE FOLLOWING GENERAL CONDITIONS SHALL BE OBSERVED:
   a. EXISTING VEGETATION SCHEDULED TO REMAIN SHALL BE PROTECTED AND REMAIN UNDISTURBED.
   b. INSTALL ADDITIONAL EROSION AND SEDIMENT CONTROL MEASURES AS REQUIRED TO PREVENT THE INCIDENTAL DISCHARGE OF SEDIMENT FROM THE SITE.
2. SPECIFIC METHODS AND MATERIALS EMPLOYED IN THE INSTALLATION AND MAINTENANCE OF EROSION CONTROL MEASURES MUST CONFORM TO THE LATEST EDITION OF THE "NEW YORK STATE STANDARDS AND SPECIFICATIONS FOR EROSION AND SEDIMENT CONTROL".
3. INSTALL PROPRIETARY EROSION AND SEDIMENT CONTROL PRODUCTS IN ACCORDANCE WITH MANUFACTURERS INSTRUCTIONS.
4. ADJUST EROSION AND SEDIMENT CONTROL MEASURES TO ACCOMMODATE CONSTRUCTION PHASING TO MAINTAIN EFFECTIVENESS OF EROSION AND SEDIMENT CONTROL MEASURES.
5. PROTECT EXISTING DRAINAGE INLETS WITHIN THE PROJECT LIMITS AND NEW DRAINAGE INLETS INSTALLED AS PART OF THIS PROJECT FROM SEDIMENT INTRUSION.
6. PERFORM INSPECTION AND MAINTENANCE OF EROSION AND SEDIMENT CONTROL MEASURES ON A WEEKLY BASIS AND AFTER HEAVY OR PROLONGED STORMS. MAINTENANCE MEASURES INCLUDE, BUT ARE NOT LIMITED TO, CLEANING AND REPAIR OF ALL EROSION AND SEDIMENT CONTROL MEASURES.
7. UTILIZE APPROPRIATE MEANS TO CONTROL DUST DURING CONSTRUCTION, INCLUDING BUT NOT LIMITED TO APPLYING WATER TO BARE SOIL SURFACES.
8. MAINTAIN THE STABILIZED CONSTRUCTION ENTRANCE TO PREVENT SOIL AND LOOSE DEBRIS FROM BEING TRACKED ONTO LOCAL ROADS. MAINTAIN THE CONSTRUCTION ENTRANCE WEEKLY UNTIL THE SITE IS PERMANENTLY STABILIZED.
9. ALL EROSION AND SEDIMENT CONTROL MEASURES SHALL REMAIN IN PLACE UNTIL DISTURBED AREAS ARE PERMANENTLY STABILIZED. AFTER PERMANENT STABILIZATION, REMOVE ALL TEMPORARY EROSION AND SEDIMENT CONTROL MEASURES AND ALL ACCUMULATED SEDIMENT AND DEBRIS FROM THE SITE AND DRAINAGE STRUCTURES.

811 1-800-962-7962
Dig Safely. New York
Call811
before you dig
www.digsafelynewyork.com

X:\WPSD (White Plains Central School District) - 1080\WPSD 2203 - HS Addition\02.BIM-CADD\Civil\docs\ADE_C110 EROSION AND SEDIMENT CONTROL PLAN.dwg Last Modified: Feb 21, 2025 - 3:14pm Plotted on: Mar 21, 2025 - 9:55am By spotero

H2M architects + engineers
538 Broad Hollow Road, 4th Floor East
Melville, NY 11747
631.756.8000 • www.h2m.com
NY Architecture & Landscape Architecture: No Certificate Required
NY Engineering Certificate of Authorization No. 0018438

CONSULTANTS:

MARK	DATE	DESCRIPTION

STATE OF NEW YORK · MATTHEW RONALD MOHLIN · 071569 · LICENSED PROFESSIONAL ENGINEER

MATTHEW R. MOHLIN, P.E.
NY PROFESSIONAL ENGINEER Lic. No. 071569
30/09/2026 EXP. DATE

"IN ACCORDANCE WITH ARTICLE 145, SECTION 7209 OF THE NYS EDUCATION LAW, ALTERATION OF THIS DOCUMENT EXCEPT BY LICENSE PROFESSIONAL IS ILLEGAL"

DESIGNED BY:	DRAWN BY:	CHECKED BY:	REVIEWED BY:
SFP	SFP/KMG		MRM
PROJECT No.: WPSD2203	DATE: MARCH 2025	SCALE: AS SHOWN	

CLIENT
White Plains City School District

ADDITION AT WHITE PLAINS HIGH SCHOOL

White Plains Public Schools · WPS · REAL LIFE LEARNING

550 NORTH STREET
WHITE PLAINS, NY 10605

SED 66-22-00-01-0-016-030

CONTRACT
CONTRACT C
CIVIL / SITE CONSTRUCTION

STATUS
FINAL BID DOCUMENT

SHEET TITLE
SOIL EROSION AND SEDIMENT CONTROL PLAN

DRAWING No.
C 110.00

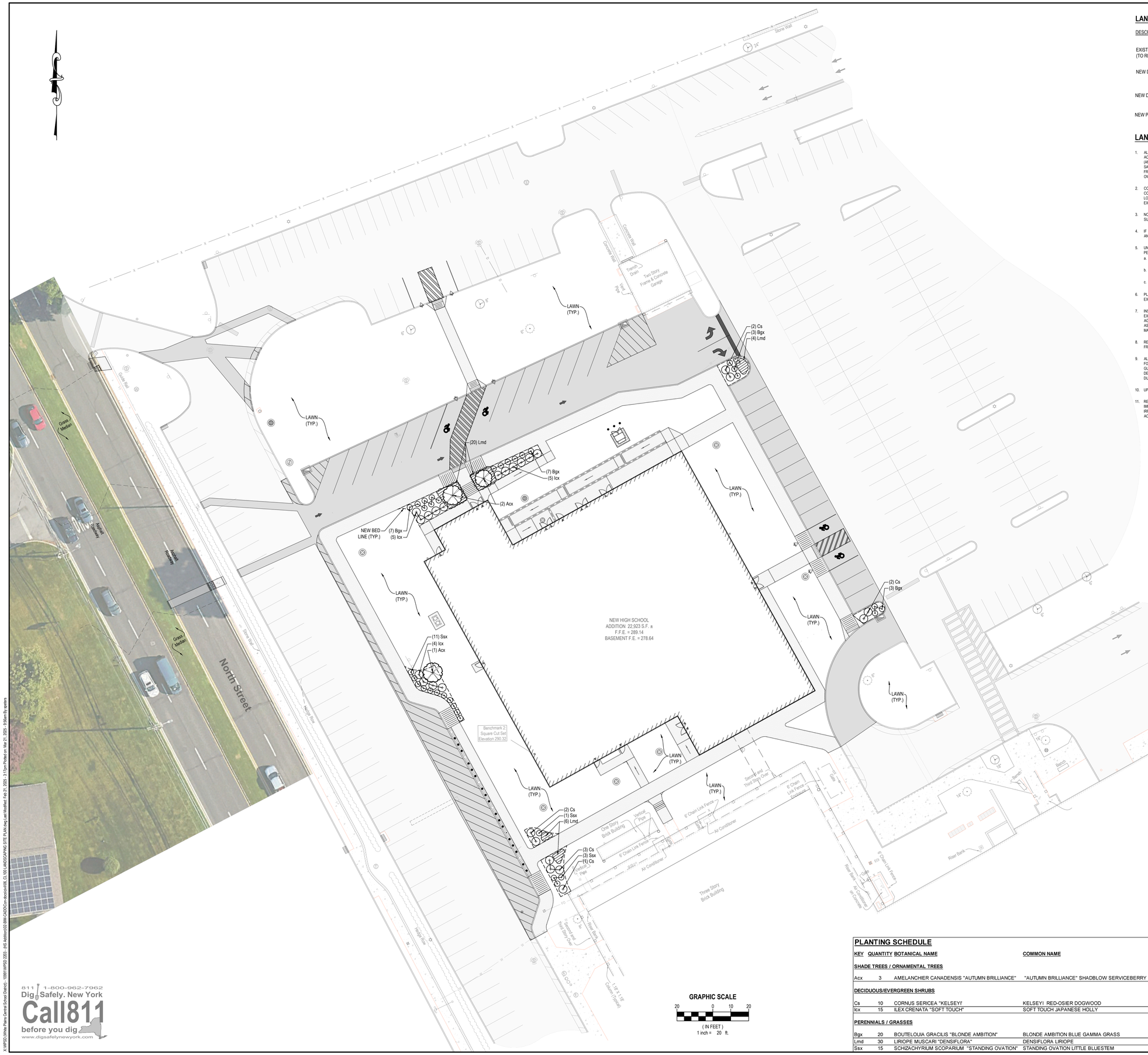

LANDSCAPE LEGEND

DESCRIPTION	SYMBOL
EXISTING DECIDUOUS/EVERGREEN TREE (TO REMAIN)	
NEW DECIDUOUS TREE	
NEW DECIDUOUS/EVERGREEN SHRUBS	
NEW PERENNIALS	

LANDSCAPE NOTES

1. ALL SUPPLIED AND INSTALLED PLANT MATERIAL SHALL BE NURSERY GROWN STOCK IN ACCORDANCE WITH THE LATEST EDITION OF THE "AMERICAN STANDARD FOR NURSERY STOCK" (ANSI Z60.1). PLANT MATERIAL SHALL BE OF THE APPROVED SPECIES AND GROWN UNDER THE SAME CLIMATIC CONDITIONS AS THE SUBJECT SITE. THEY SHALL BE OF SYMMETRICAL GROWTH, FREE OF INSECTS, PESTS, AND DISEASE. SUBSTITUTIONS MUST BE APPROVED IN WRITING BY THE OWNER.
2. CONFIRM THE LOCATION OF EXISTING SUBSURFACE UTILITIES WITH THE RESPECTIVE UTILITY COMPANIES AND COORDINATE WITH THE GRADING AND DRAINAGE PLAN OR UTILITY PLAN FOR THE LOCATION OF PROPOSED SUBSURFACE UTILITY LINES AND STRUCTURES PRIOR TO ANY EXCAVATION. NOTIFY THE LANDSCAPE ARCHITECT IF ANY CONFLICTS EXIST.
3. NOTIFY THE OWNER IMMEDIATELY AND PRIOR TO THE INSTALLATION OF ANY PLANT MATERIALS IF SUB-GRADE SOIL CONDITIONS ARE DELETERIOUS TO PLANT GROWTH OR WILL INHIBIT DRAINAGE.
4. IF ANY DISCREPANCY EXISTS BETWEEN THE PLANT COUNT SHOWN IN THE PLANTING SCHEDULE AND THE LANDSCAPE PLAN, THE PLAN SHALL TAKE PRECEDENCE.
5. UNLESS OTHERWISE APPROVED IN WRITING, INSTALL VEGETATION DURING THE FOLLOWING PERIODS:
   a. DECIDUOUS WOODY PLANTS: SEPTEMBER 15 TO MAY 15 OR WHENEVER TEMPERATURE IS ABOVE 40 DEGREES F.
   b. EVERGREENS: AUGUST 15 TO SEPTEMBER 30 OR DURING MARCH 15 AND MAY 30 BEFORE THE START OF NEW GROWTH.
   c. SEEDING: APRIL 1 TO MAY 15 AND AUGUST 15 TO OCTOBER 30.
6. PLANTS SHALL BEAR THE SAME RELATIONSHIP TO FINISHED GRADE AS THEY BORE TO THE EXISTING GRADE IN THE NURSERY.
7. INSTALL A 3" LAYER OF SHREDDED BARK MULCH IN ALL TREE PLANTING AREAS AND SHRUB BEDS, EXCEPT WHERE OTHERWISE NOTED ON PLAN (RIPARIAN ZONE). DO NOT PLACE MULCH DIRECTLY AGAINST TRUNKS OF TREES. FORM AN EARTH SAUCER AROUND EACH PLANT OR SHRUB BED SO AS TO HOLD WATER AND MULCH. PROVIDE SUFFICIENT IRRIGATION FOR ALL PLANT MATERIALS TO MAINTAIN HEALTHY AND VIGOROUS CONDITION UNTIL THE PROJECT IS ACCEPTED BY THE OWNER.
8. REMOVE TREE STAKES AND OTHER PLANTING GUIDE MATERIALS,IF SPECIFIED, AFTER ONE YEAR FROM THE TIME OF PLANTING.
9. ALL PLANT MATERIAL SHALL BE GUARANTEED FOR A PERIOD OF ONE YEAR AFTER PLANTING FOLLOWING ACCEPTANCE BY THE OWNER. UPON COMPLETION OF THE ONE YEAR PLANT GUARANTEE PERIOD, REPLACE ALL PLANT MATERIAL DEEMED DEAD, DYING OR DISEASED AS DETERMINED BY THE OWNER REPLACE PLANT WITH THE SAME SPECIES AND SIZE IMMEDIATELY DURING THE CURRENT GROWING SEASON OR AT THE BEGINNING OF THE NEXT GROWING SEASON.
10. UPON COMPLETION OF PLANTING OPERATION CULTIVATE AND NEATLY RAKE ALL PLANTING AREAS.
11. RESTORE ALL DISTURBED LAWN AREAS AND ALL AREAS NOT SPECIFICALLY IDENTIFIED FOR OTHER IMPROVEMENTS WITH 4 INCHES OF TOPSOIL AND SEED. PROVIDE SUFFICIENT MULCH AND IRRIGATION TO ESTABLISH AND MAINTAIN A HEALTHY STAND OF LAWN UNTIL PROJECT IS ACCEPTED BY THE OWNER.

PLANTING SCHEDULE

KEY	QUANTITY	BOTANICAL NAME	COMMON NAME	SIZE	SPACING	REMARKS
SHADE TREES / ORNAMENTAL TREES						
Acx	3	AMELANCHIER CANADENSIS "AUTUMN BRILLIANCE"	"AUTUMN BRILLIANCE" SHADBLOW SERVICEBERRY	1" - 1 1/2" CAL.	-	BALLED & BURLAPPED, MULTI-STEMMED
DECIDUOUS/EVERGREEN SHRUBS						
Cs	10	CORNUS SERICEA "KELSEYI'	KELSEYI RED-OSIER DOGWOOD	24"- 30"	3' O.C.	NO. 3 CAN
Icx	15	ILEX CRENATA "SOFT TOUCH"	SOFT TOUCH JAPANESE HOLLY	2' - 3'	3' O.C.	NO. 3 CAN
PERENNIALS / GRASSES						
Bgx	20	BOUTELOUIA GRACILIS "BLONDE AMBITION"	BLONDE AMBITION BLUE GAMMA GRASS	12" - 18"	30" O.C.	NO. 2 CAN STAGGERED ROW
Lmd	30	LIRIOPE MUSCARI "DENSIFLORA"	DENSIFLORA LIRIOPE	12" - 18"	2' O.C.	NO. 2 CAN
Ssx	15	SCHIZACHYRIUM SCOPARIUM "STANDING OVATION"	STANDING OVATION LITTLE BLUESTEM	12" - 18"	3' O.C.	NO. 2 CAN

GRAPHIC SCALE

20 0 10 20

(IN FEET)
1 inch = 20 ft.

811 1-800-962-7962
Dig Safely. New York
Call811
before you dig
www.digsafelynewyork.com

H2M architects + engineers
538 Broad Hollow Road, 4th Floor East
Melville, NY 11747
631.756.8000 • www.h2m.com
NY Architecture & Landscape Architecture: No Certificate Required
NY Engineering Certificate of Authorization No. 0018438

CONSULTANTS:

MARK	DATE	DESCRIPTION

STATE OF NEW YORK · MATTHEW RONALD MOHLIN · 071569 · LICENSED PROFESSIONAL ENGINEER

30/09/2026
EXP. DATE

MATTHEW R. MOHLIN, P.E.
NY PROFESSIONAL ENGINEER Lic. No. 071569

"IN ACCORDANCE WITH ARTICLE 145, SECTION 7209 OF THE NYS EDUCATION LAW, ALTERATION OF THIS DOCUMENT EXCEPT BY LICENSE PROFESSIONAL IS ILLEGAL"

DESIGNED BY:	DRAWN BY:	CHECKED BY:	REVIEWED BY:
SFP	SFP/KMG		MRM
PROJECT No.: WPSD2203	DATE: MARCH 2025		SCALE: AS SHOWN

CLIENT

White Plains City School District

ADDITION AT WHITE PLAINS HIGH SCHOOL

White Plains Public Schools · WP · REAL LIFE LEARNING

550 NORTH STREET
WHITE PLAINS, NY 10605

SED 66-22-00-01-0-016-030

CONTRACT

CONTRACT C
CIVIL / SITE CONSTRUCTION

STATUS

FINAL BID DOCUMENT

SHEET TITLE

LANDSCAPE PLAN

DRAWING No.

CL 100.00

X:\WPSD\White Plains Central School District_1089\WPSD 2203 - JHS Addition\02 BID\CADD\Cad-docs\v06\ CL 100 LANDSCAPING SITE PLAN.dwg Last Modified: Feb 21, 2025 - 3:17pm Protector: Mar 21, 2025 - 9:56am By gstiers

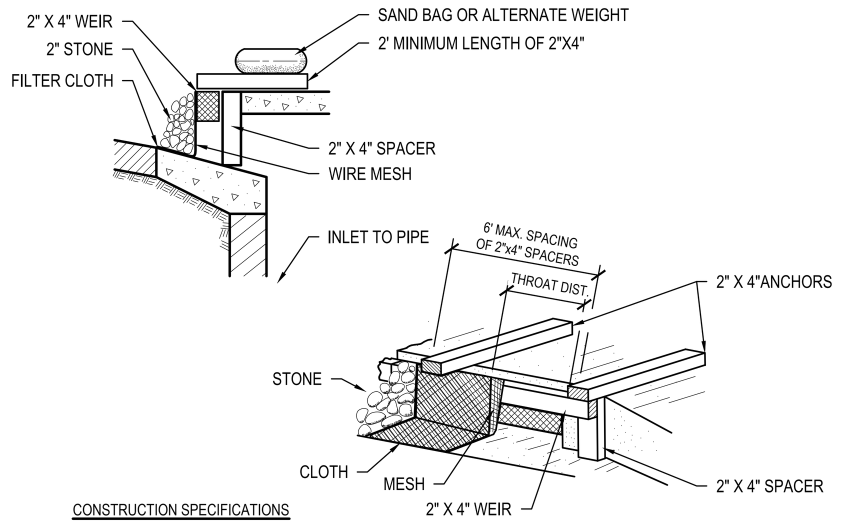

CONSTRUCTION SPECIFICATIONS

1. FILTER FABRIC SHALL HAVE AN EOS OF 40-85.
2. WOODEN FRAME SHALL BE CONSTRUCTED OF 2" x 4" CONSTRUCTION GRADE LUMBER
3. WIRE MESH ACROSS THROAT SHALL BE A CONTINUOUS PIECE 30 INCH MINIMUM WIDTH WITH A LENGTH 4 FEET LONGER THAN THE THROAT. IT SHALL BE SHAPED AND SECURELY NAILED TO A 2" x 4" WEIR.
4. THE WEIR SHALL BE SECURELY NAILED TO 2" x 4" SPACERS 9 INCHES LONG SPACED NO MORE THAN 6 FEET APART.
5. THE ASSEMBLY SHALL BE PLACED AGAINST THE INLET AND SECURED BY 2" x 4" ANCHORS 2 FEET LONG EXTENDING ACROSS THE TOP OF THE INLET AND HELD IN PLACE BY SANDBAGS OR ALTERNATE WEIGHTS.

MAXIMUM DRAINAGE AREA OF 1 ACRE

1 Filter Fabric Curb Drop Inlet Protection

SCALE: NTS (312553.13 NYDC1) - U

FILTER FABRIC PROPERTIES

Mechanical Properties	Test Method	Units	MARV
Grab Tensile Strength	ASTM D 4632	lbs	365 x 200
Grab Tensile Elongation	ASTM D 4632	%	24 x 10
Puncture Strength	ASTM D 4833	lbs	90
Mullen Burst Strength	ASTM D 3786	psi	450
Trapezoid Tear Strength	ASTM D 4533	lbs	115 x 75
UV Resistence	ASTM D 4355	%	90
Apparent Opening Size	ASTM D 4751	US Std Sieve)	40
Flow Rate	ASTM D 4491	$gal/min/ft^2$	145
Permittivity	ASTM D 4491	Sec^{-1}	2.1

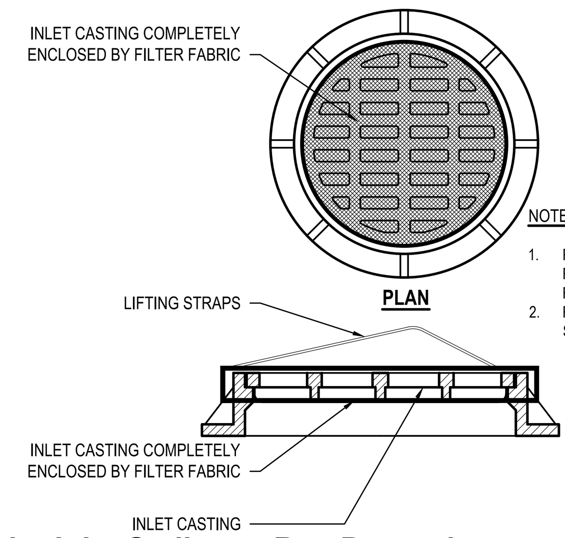

NOTES

1. REMOVE ACCUMULATED SEDIMENT AND DEBRIS AS REQUIRED TO MAINTAIN ADEQUATE FLOW THROUGH FILTER FABRIC.
2. REMOVE INLET PROTECTION UPON PERMANENT STABILIZATION OF CONSTRUCTION SITE.

2 Circular Inlet Sediment Bag Protection

SCALE: NTS 312553.13 H2MX2

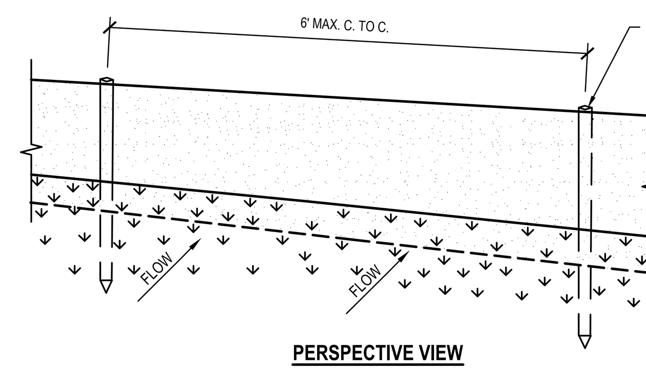

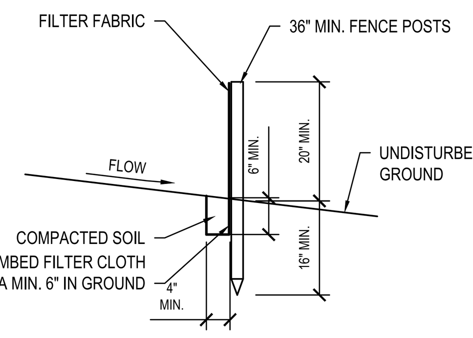

NOTES

1. POSTS SHALL BE 2" X 2" HARDWOOD OR APPROVED EQUIVALENT.
2. FILTER CLOTH TO BE TO BE FASTENED SECURELY TO POSTS AT TOP AND MID SECTION.
3. WHEN TWO SECTIONS OF FILTER CLOTH ADJOIN EACH OTHER THEY SHALL BE OVERLAPPED BY SIX INCHES AND FOLDED AND SECURE AT POST. FILTER CLOTH SHALL BE EITHER FILTER X, MIRAFI 100X, STABILINKA T140N, OR APPROVED EQUIVALENT.
4. MAINTENANCE SHALL BE PERFORMED AS NEEDED AND ACCUMULATED SEDIMENT REMOVED WHEN "BULGES" DEVELOP IN THE SILT FENCE.
5. REMOVE SILT FENCE UPON PERMANENT STABILIZATION OF UPLAND AREAS.

3 Silt Fence - Standard

SCALE: NTS 312513.13 NYDC1-U

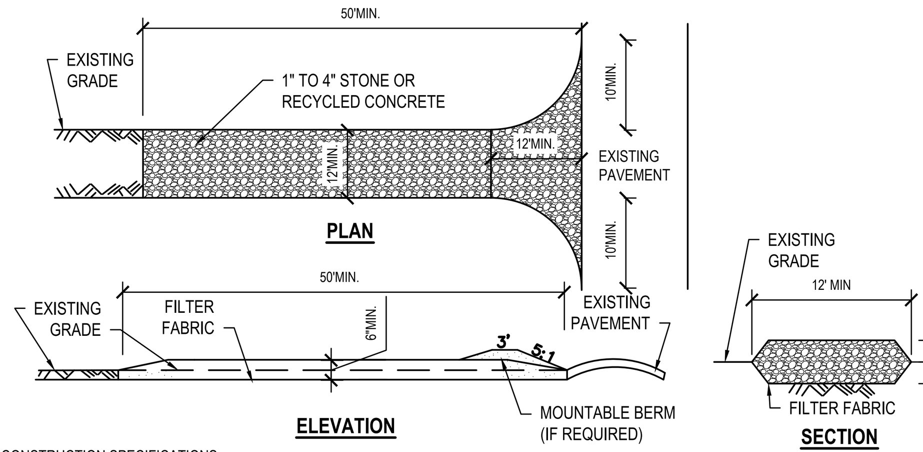

CONSTRUCTION SPECIFICATIONS

1. STONE OR RECYCLED CONCRETE SIZE TO BE 1" TO 4".
2. LENGTH - NOT LESS THAN 50 FEET (UNLESS INDICATED OTHERWISE ON PLANS).
3. THICKNESS - NOT LESS THAN SIX (6) INCHES.
4. WIDTH - TWELVE (12) FOOT MINIMUM, BUT NOT LESS THAN THE FULL WIDTH AT POINTS WHERE INGRESS OR EGRESS OCCURS. TWENTY-FOUR (24) FOOT IF SINGLE ENTRANCE TO SITE.
5. PLACE FILTER FABRIC OVER THE ENTIRE AREA PRIOR TO PLACING OF STONE. FILTER FABRIC TO BE TREVIRA SPUNBOND, 1135 MIRAFI 600X OR EQUIVALENT.
6. SURFACE WATER - ALL SURFACE WATER FLOWING OR DIVERTED TOWARD CONSTRUCTION ENTRANCES SHALL BE PIPED BENEATH THE ENTRANCE. IF PIPING IS IMPRACTICAL, A MOUNTABLE BERM WITH 5:1 SLOPES WILL BE PERMITTED.
7. MAINTENANCE - THE ENTRANCE SHALL BE MAINTAINED IN A CONDITION WHICH WILL PREVENT TRACKING OR FLOWING OF SEDIMENT ONTO PUBLIC RIGHTS-OF-WAY, ALL SEDIMENT SPILLED, DROPPED, WASHED OR TRACKED ONTO PUBLIC RIGHTS-OF-WAY MUST BE REMOVED IMMEDIATELY.
8. WHEN WASHING IS REQUIRED, IT SHALL BE DONE ON AN AREA STABILIZED WITH STONE AND WHICH DRAINS INTO AN APPROVED SEDIMENT TRAPPING DEVICE.
9. PERIODIC INSPECTION AND NEEDED MAINTENANCE SHALL BE PROVIDED AFTER EACH RAIN.

4 Stabilized Construction Entrance

SCALE: NTS (312513.19 NYDC1) - U

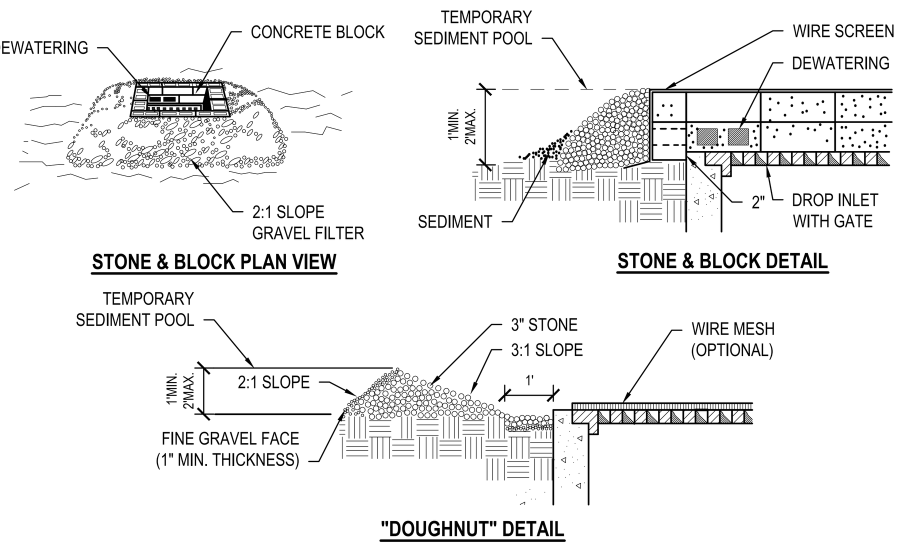

CONSTRUCTION SPECIFICATIONS

1. LAY ONE BLOCK ON EACH SIDE OF THE STRUCTURE ON ITS SIDE FOR DEWATERING. FOUNDATION SHALL BE 2 INCHES MINIMUM BELOW REST OF INLET AND BLOCKS SHALL BE PLACED AGAINST INLET FOR SUPPORT.
2. HARDWARE CLOTH OR 1/2 INCH WIRE MESH SHALL BE PLACED OVER BLOCK OPENINGS TO SUPPORT STONE.
3. USE CLEAN STONE OR GRAVEL 1/2 - 3/4 INCH IN DIAMETER PLACED 2 INCHES BELOW TOP OF THE BLOCK ON A 2:1 SLOPE OR FLATTER.
4. FOR STONE STRUCTURES ONLY, A 1 FOOT THICK LAYER OF THE FILTER STONE WILL BE PLACED AGAINST THE 3 INCH STONE AS SHOWN ON THE DRAWINGS.
5. MAXIMUM DRAINAGE AREA 1 ACRE.

5 Stone & Block Drop Inlet Protection

SCALE: NTS SPECIFICATION #

NOTES:

1. AREA CHOSEN FOR STOCKPILING OPERATIONS SHALL BE DRY AND STABLE.
2. MAXIMUM SLOPE OF STOCKPILE SHALL BE 2:1.
3. UPON COMPLETION OF SOIL STOCKPILING, EACH PILE SHALL BE SURROUNDED WITH EITHER SILT FENCING OR STRAW BALES, THEN STABILIZED WITH VEGETATION OR COVERED.

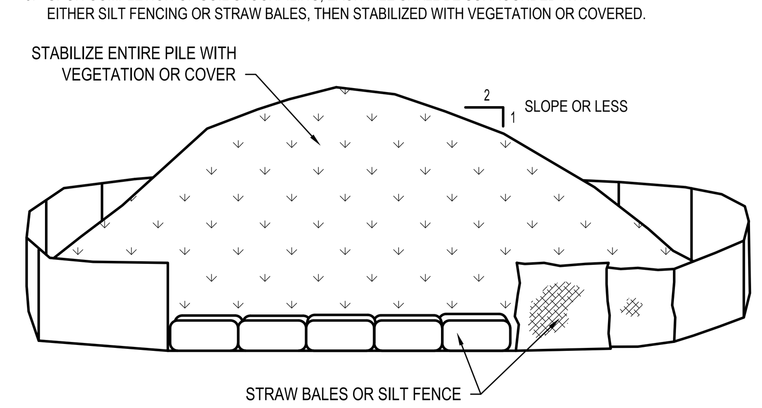

TO BE USED WHERE TOPSOIL IS NECESSARY FOR REGRADING AND VEGETATING DISTURBED AREAS. TEMPORARY STOCKPILE STABILIZATION MEASURES INCLUDE VEGETATIVE COVER, MULCH, NONVEGETATIVE COVER, AND PERIPHERAL SEDIMENT TRAPPING BARRIERS. THE STABILIZATION MEASURE(S) SELECTED SHOULD BE APPROPRIATE FOR THE TIME OF YEAR, SITE CONDITIONS, AND REQUIRED PERIOD OF USE.

6 Temporary Soil Stockpile

SCALE: NTS (312513.23 NYDC1) - U

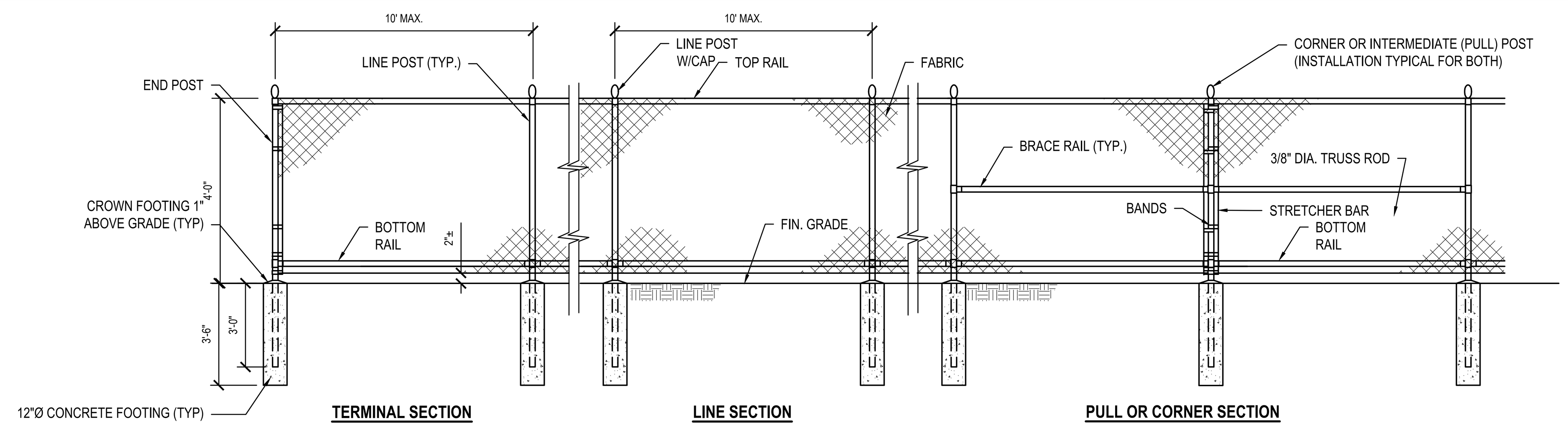

NOTES:

1. FABRIC: ASTM A392, 2" MESH, 9 GAUGE STEEL CORE CHAIN LINK FENCE FABRIC. ASTM A641 GALVANIZED STEEL CORE WIRE, ZINC COATED TO 0.3 OZ/SF WITH 7-12 MIL PVC COATING IN ACCORDANCE WITH ASTM F668 CLASS 2B.
2. TOP AND BRACE RAILS: ASTM F1043 1.66" O.D. (1.84 LBS./FT.) SS40 STEEL PIPE. HOT DIPPED GALVANIZED TO 1.8 OZ/SF IN ACCORDANCE WITH ASTM A123. SUPPLEMENTAL 10-15 MIL PVC POWDER COATING IN ACCORDANCE WITH ASTM F1043
3. LINE POSTS: ASTM F1043 1.9" O.D. (2.28 LBS./FT.) SS40 STEEL PIPE. HOT DIPPED GALVANIZED TO 1.8 OZ/SF IN ACCORDANCE WITH ASTM A123 .SUPPLEMENTAL 10-15 MIL PVC POWDER COATING IN ACCORDANCE WITH ASTM F1043.
4. END, CORNER & PULL POSTS: ASTM F1043 2.375" O.D. (3.12 LBS./FT.) SS40 STEEL PIPE. HOT DIPPED GALVANIZED TO 1.8 OZ/SF IN ACCORDANCE WITH ASTM A123. SUPPLEMENTAL 10-15 MIL PVC POWDER COATING IN ACCORDANCE WITH ASTM F1043.
5. FITTINGS AND ACCESSORIES: ASTM F626 MALLEABLE OR PRESSED STEEL. HOT DIPPED GALVANIZED TO 1.2 OZ/SF. SUPPLEMENTAL 10-15 MIL PVC POWDER COATING IN ACCORDANCE WITH ASTM F1043.
6. BOTTOM TENSION WIRE: ASTM A824 NO. 7 GAUGE STEEL-MARCELLED WIRE, ZINC COATED TO 0.4 OZ/SF WITH 7-12 MIL PVC POWDER COATING IN ACCORDANCE WITH ASTM F1664.
7. VINYL COATING COLOR: TO BE SELECTED BY OWNER.
8. CONCRETE TO ACHIEVED 4000 PSI STRENGTH AT 28 DAYS.

7 Chain Link Fence - Vinyl Coated - 4' Height

SCALE: NTS 323113.15 H2MX1

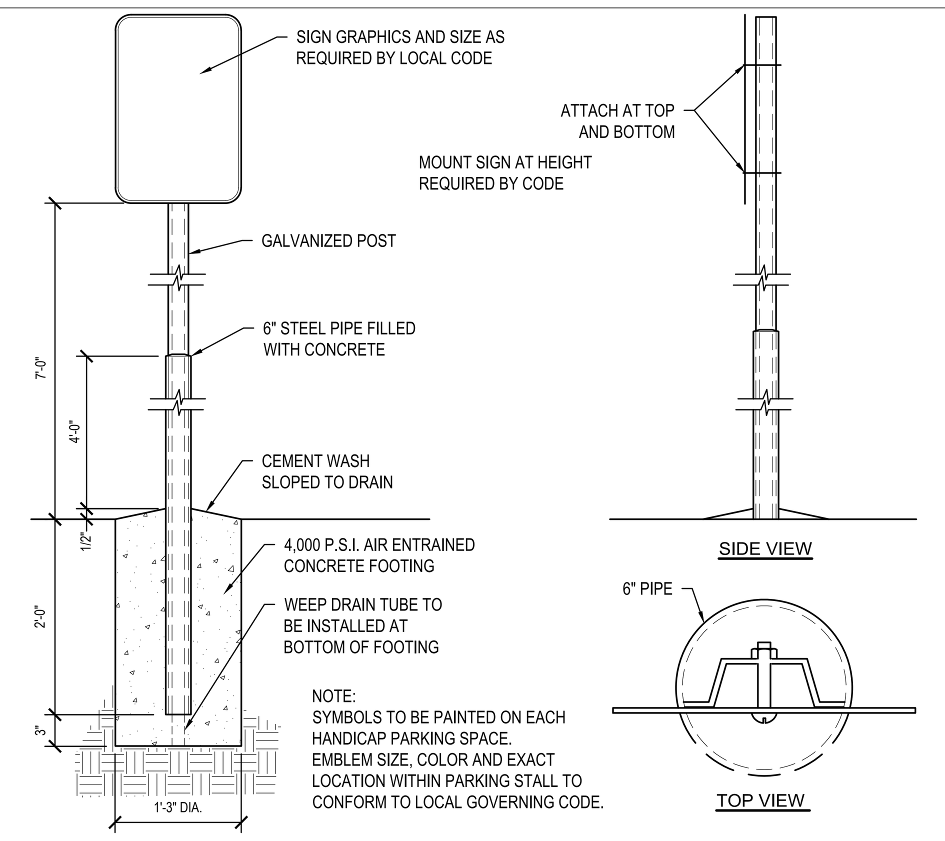

NOTE:
SYMBOLS TO BE PAINTED ON EACH HANDICAP PARKING SPACE.
EMBLEM SIZE, COLOR AND EXACT LOCATION WITHIN PARKING STALL TO CONFORM TO LOCAL GOVERNING CODE.

8 Post - Mounted ADA Sign

SCALE: NTS (101453H2MX1 ADA) - U

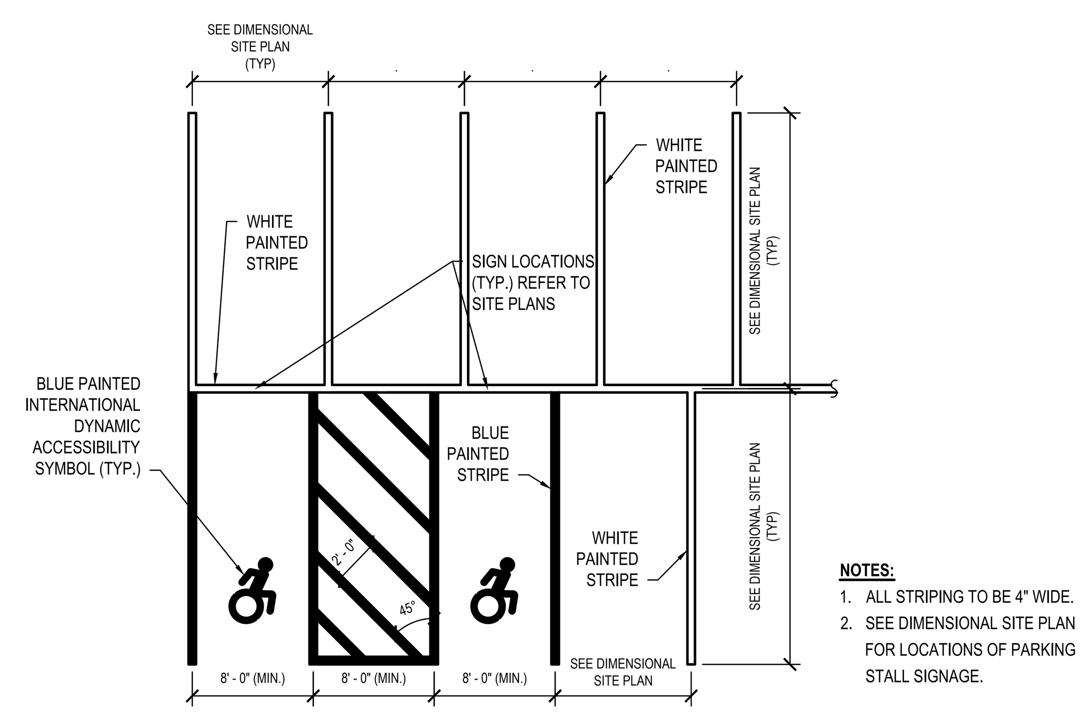

NOTES:

1. ALL STRIPING TO BE 4" WIDE.
2. SEE DIMENSIONAL SITE PLAN FOR LOCATIONS OF PARKING STALL SIGNAGE.

9 Parking Stall Layout - Single Striping

SCALE: NTS (321799.00 H2MX1) - U

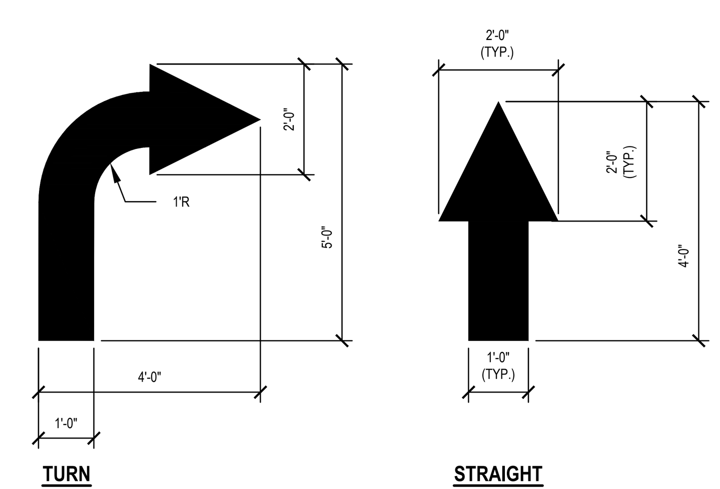

NOTES:

1. ALL ARROWS MAY NOT BE APPLICABLE TO THIS PROJECT. REFER TO SITE PLAN SHEETS.
2. TURN ARROW DETAILS SHOWN ARE FOR RIGHT TURN. REVERSE DETAILS AS REQUIRED FOR LEFT TURNS.

10 Directional Arrows - On SIte

SCALE: NTS 321723.13 H2MX1 -U

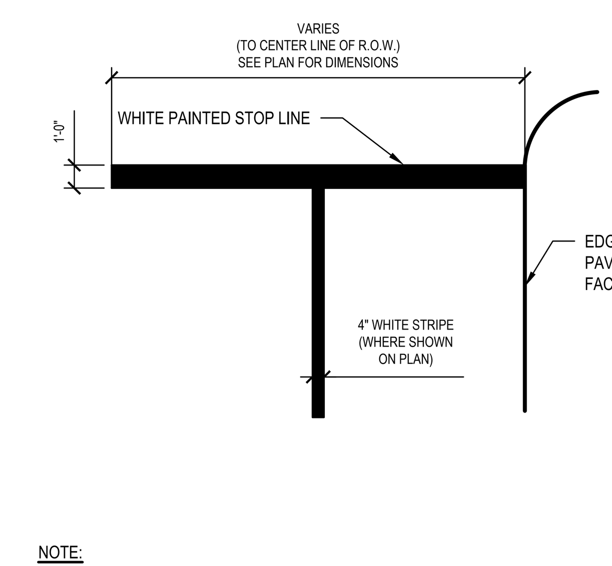

NOTE:

1. SEE DIMENSIONAL SITE PLAN FOR STOP BAR LOCATION

11 Stop Bar

SCALE: NTS 321723.13 (H2MX1) -U

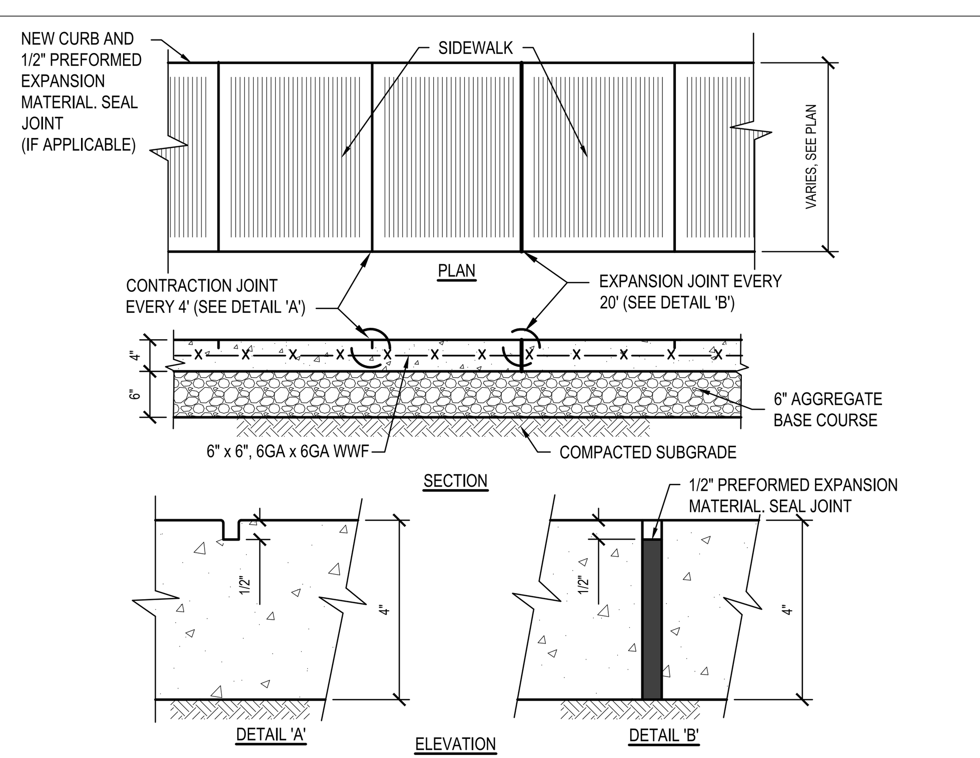

NOTES:

1. CONCRETE TO ACHIEVE 4000 PSI STRENGTH AT 28 DAYS
2. COMPACT SUBGRADE TO 92% MAXIMUM DENSITY IN ACCORDANCE WITH ASTM D1557.
3. APPLY BROOM FINISH PERPENDICULAR TO DIRECTION OF TRAVEL.
4. EXPANSION JOINT TO BE PLACED BETWEEN BUILDING FACE AND SIDEWALK.

12 Concrete Sidewalk

SCALE: NTS (321313.33 H2MX1) - U

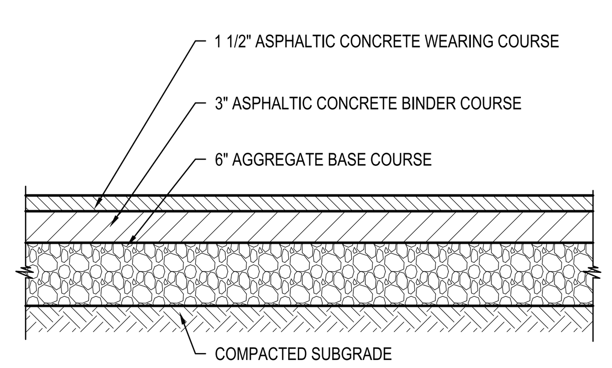

NOTE:
COMPACT SUBGRADE TO 92% MAXIMUM DENSITY IN ACCORDANCE WITH ASTM D1557.

13 Asphalt Pavement - Heavy Duty

SCALE: NTS (321216.13 H2MX2) - U

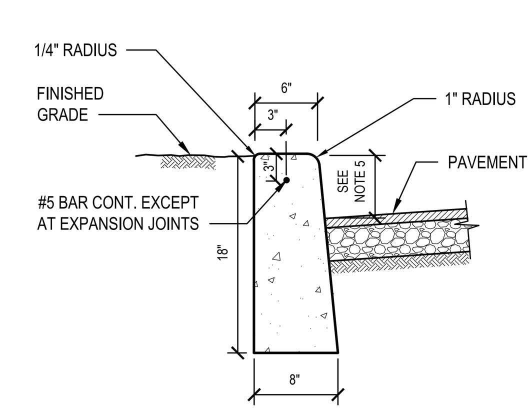

NOTES:

1. WOOD FLOAT AND BRUSH FINISH ON ALL SURFACES ABOVE GRADE.
2. AT ALL CURB ENDINGS, PROVIDE SMOOTH TRANSITION DOWN TO PAVED SURFACE.
3. PROVIDE 1/2" PREFORMED EXPANSION MATERIAL AT 20' ON CENTER AND AT ALL CORNERS. SET EXPANSION MATERIAL 1/2" BELOW EXPOSED SURFACES AND SEAL JOINT.
4. CONCRETE TO ACHIEVE 4,000 PSI STRENGTH AT 28 DAYS.
5. CONCRETE REVEAL TO BE 6" UNLESS OTHERWISE NOTED. REVEAL AT DROP CURB AREAS TO BE PAINTED YELLOW AND BE NO MORE THAN 1/4".

14 Concrete Curb

SCALE: NTS (321613.16 H2MX1)

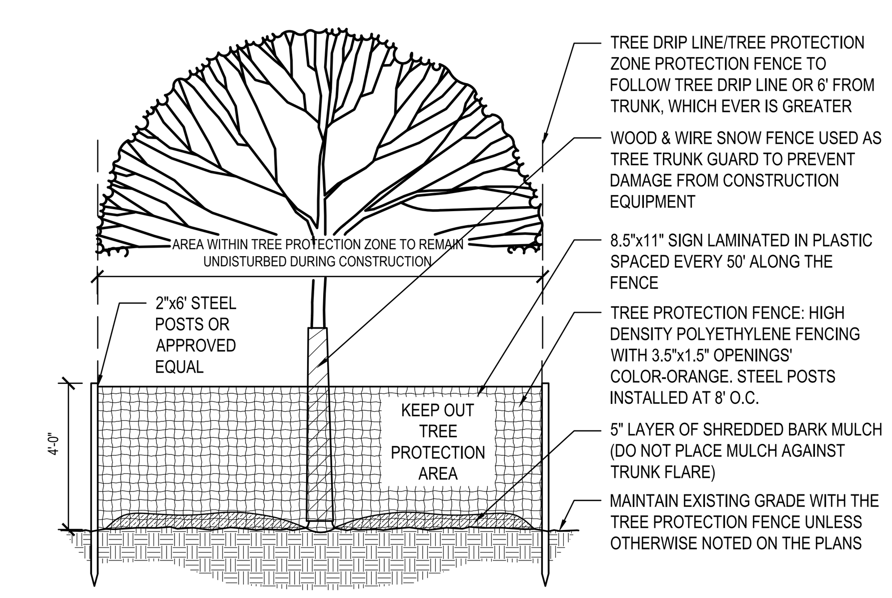

NOTE:

1. SEE SPECIFICATIONS FOR ADDITIONAL TREE PROTECTION REQUIREMENTS
2. IF THERE IS NO EXISTING IRRIGATION, SEE SPECIFICATIONS FOR WATERING REQUIREMENTS
3. NO PRUNING SHALL BE PERFORMED EXCEPT BY APPROVED ARBORIST
4. NO EQUIPMENT SHALL OPERATE INSIDE THE PROTECTIVE FENCING INCLUDING DURING FENCE INSTALLATION AND REMOVAL.
5. SEE SITE PREPARATION PLAN FOR ANY MODIFICATIONS WITH THE TREE PROTECTION AREA.

15 Tree Protection

SCALE: NTS

H2M architects + engineers
538 Broad Hollow Road, 4th Floor East
Melville, NY 11747
631.756.8000 • www.h2m.com
NY Architecture & Landscape Architecture: No Certificate Required
NY Engineering Certificate of Authorization No. 0018438

CONSULTANTS:

MARK	DATE	DESCRIPTION

MATTHEW R. MOHLIN, P.E.
NY PROFESSIONAL ENGINEER Lic. No. 071569
30/09/2026 EXP. DATE

"IN ACCORDANCE WITH ARTICLE 145, SECTION 7209 OF THE NYS EDUCATION LAW, ALTERATION OF THIS DOCUMENT EXCEPT BY LICENSE PROFESSIONAL IS ILLEGAL"

DESIGNED BY:	DRAWN BY:	CHECKED BY:	REVIEWED BY:
SFP	SFP/KMG		MRM

PROJECT No.:	DATE:	SCALE:
WPSD2203	MARCH 2025	AS SHOWN

CLIENT

White Plains City School District

ADDITION AT WHITE PLAINS HIGH SCHOOL

**550 NORTH STREET
WHITE PLAINS, NY 10605**

SED 66-22-00-01-0-016-030

CONTRACT

**CONTRACT C
CIVIL / SITE CONSTRUCTION**

STATUS

FINAL BID DOCUMENT

SHEET TITLE

SITE DETAILS

DRAWING No.

C 500.00

X:\WPSD (White Plains Central School District) - 10991\WPSD 2203 - (HS Addition)\02-BIM-CADD\Con-docs\civil\07_C500 SITE DETAILS.dwg Last Modified: Feb 21, 2025 - 3:18pm Plotted on: Feb 21, 2025 - 3:18pm By speters

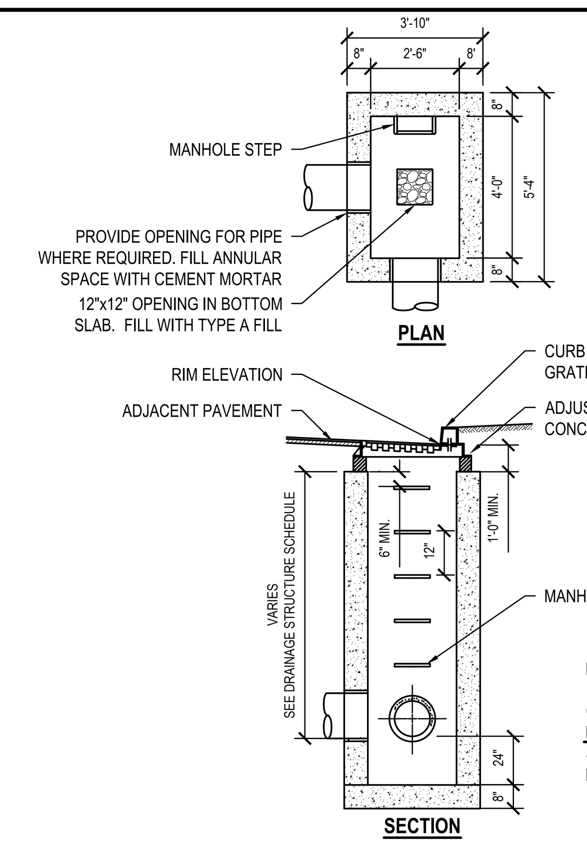

NOTE

CATCH BASIN IS TO BE REINFORCED PRECAST CONCRETE AND CAPABLE OF SUPPORTING AASHTO HS20 HIGHWAY LOADING.

1 Catch Basin - Standard

SCALE: NTS (334413.13 H2MX1)

NOTES:

1. MANHOLE IS TO BE REINFORCED PRECAST CONCRETE AND CAPABLE OF SUPPORTING THE AASHTO HS-20 HIGHWAY LOADING.
2. MANHOLE CONSTRUCTION TO CONFORM TO ASTM C913
3. PROVIDE ADDITIONAL RISERS AS REQUIRED.
4. FLEXIBLE GASKET TO CONFORM TO THE REQUIREMENTS OF ASTM C990.

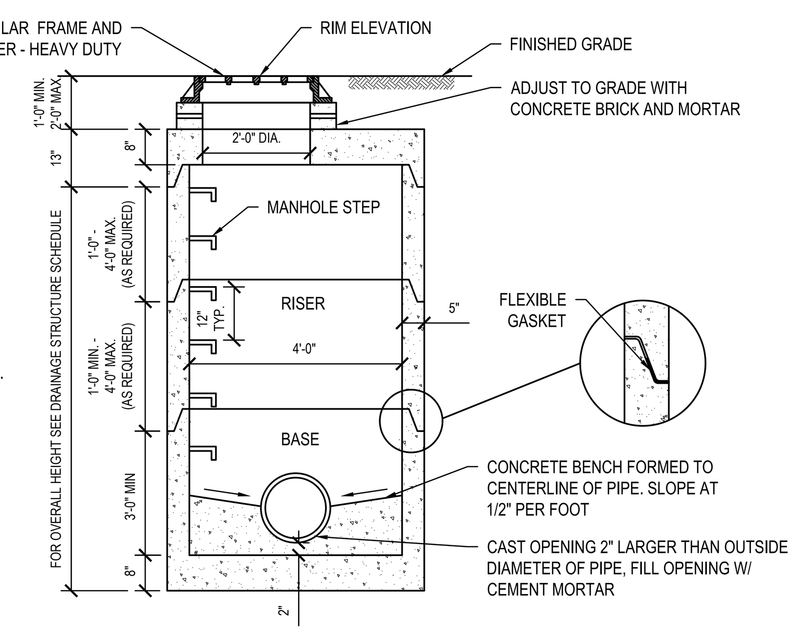

2 Drainage Manhole - 4 Foot Diameter

SCALE: NTS (334913.13 H2MX1)

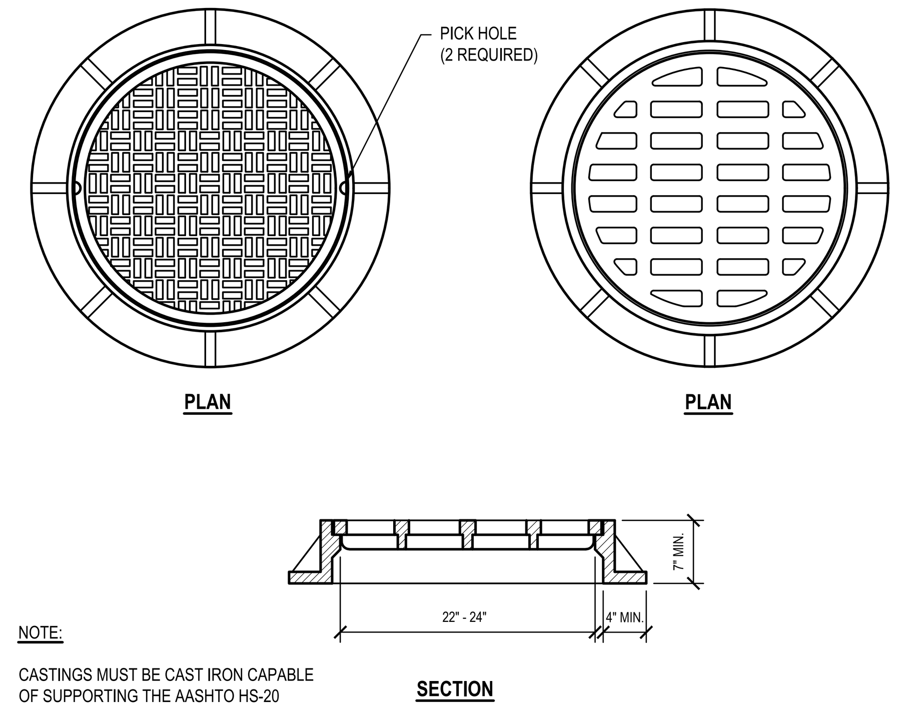

NOTE:

CASTINGS MUST BE CAST IRON CAPABLE OF SUPPORTING THE AASHTO HS-20 HIGHWAY LOADING.

3 Circular Frame & Cover or Grate - Heavy Duty

SCALE: NTS (334913.23 H2WMX5-MOD)

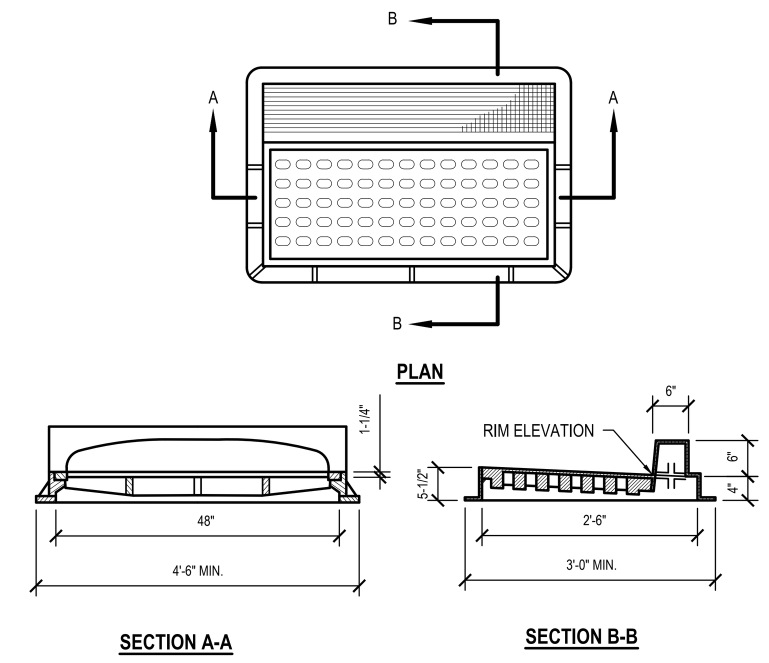

NOTE

1. CASTING MUST BE CAST IRON AND CAPABLE OF SUPPORTING AASHTO HS-20 HIGHWAY LOADING.
2. GRATE PATTERN TO BE BICYCLE SAFE.

4 Combination Inlet Frame & Grate - Heavy Duty

SCALE: NTS (334913.23 H2MX3)

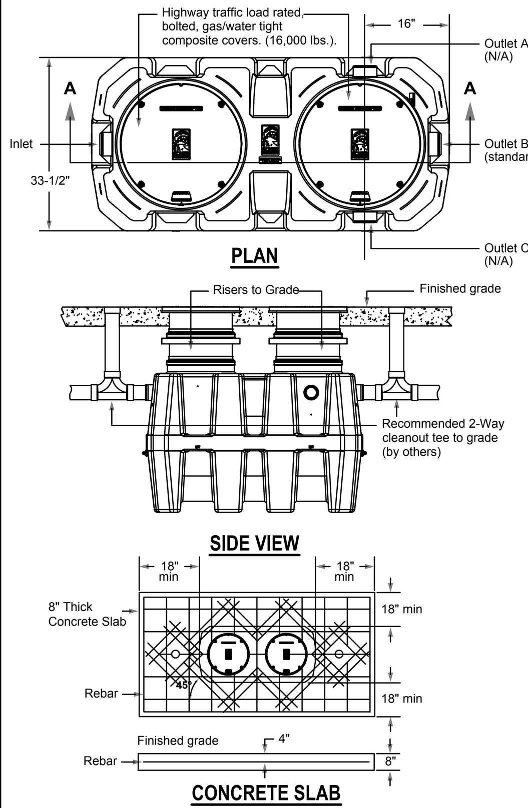

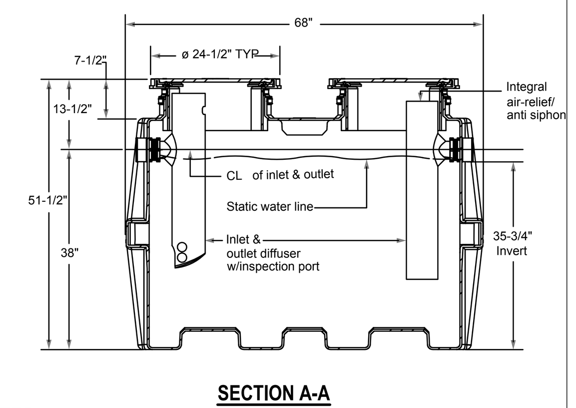

NOTES

1. Grease Interceptor to be Schier GB-250 (100 GPM/275 Gal. Capacity) or approved equal. contractor to install per all manufacturers specifications.
2. 4" plain end inlet/outlet
3. Unit weight - w/composite covers: 230 lbs.; w/cast iron covers: 340 lbs. (For wet weight add 2290 lbs.)
4.Maximum operating temperature: 140º F continuous
5.Capacities - Liquid: 275 gal.; Grease: 1,076 lbs. (147.4 gal.); Solids: 105 gal.
6. Built-in Flow control.
7. For gravity drainage applications only. Do not use for pressure applications.
8. Cover placement allows full access to tank for proper maintenance.
9. Vent not required unless per local code.
10. Engineered inlet and outlet diffusers are removable to inspect/clean piping.
11. Integral air relief / Anti-siphon / Sampling access.

BACKFILL

1.Preparation of sub grade per geotech recommendations.
2. Stabilize and compact sub grade to 95% proctor.
3. Fill unit with water before backfilling to stabilize unit and prevent float-out during backfilling. Secure covers and risers (if necessary) to the unit.
4.Backfill evenly around tank using crushed aggregate (approximately 3/4" size rock or sand, with no fines), or flowable fill. Do not compact backfill **around unit.**

FINISHED CONCRETE SLAB

Minimum 8" Thick concrete slab with rebar required. Slab to be designed to accomodate traffic loading. At a minimum, concrete to be 28 day compressive strength to 4,000 PSI. Use NO. 4 rebar (ø 1/2") grade 60 steel per ASTM A615: connected with tie wire. Rebar to be 2-1/2" from edge of concrete and spaced in a 12" grid with 4" spacing around access openings.

5 Grease Interceptor

SCALE: NTS

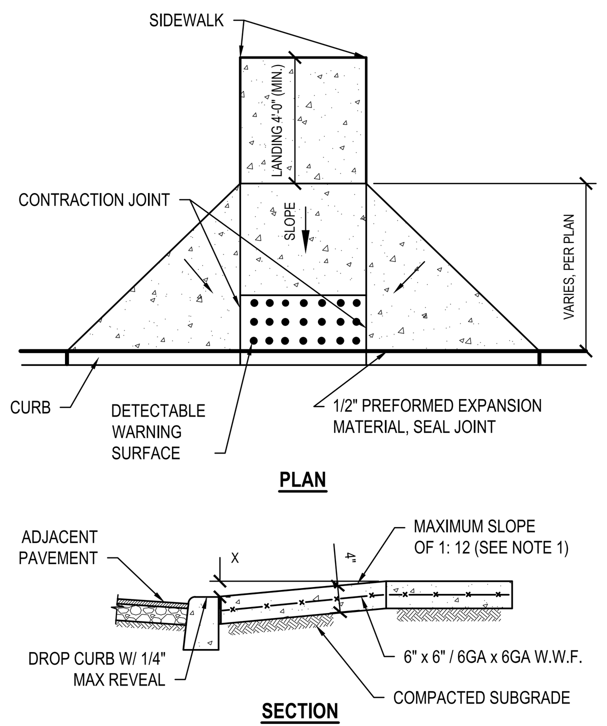

NOTES:

1. DIMENSIONS SHOWN ARE APPLICABLE FOR INSTALLATION WITH 6" CURB REVEAL. DIMENSIONS OF FLARE AND RAMP LENGTH FOR INSTALLATION WITH ALTERNATE CURB REVEALS MAY BE MODIFIED TO MAINTAIN A RAMP SLOPE NOT TO EXCEED 1:12.
2. THE SIZE OF THE DETECTABLE WARNING FIELD SHALL BE 24" IN THE DIRECTION OF TRAVEL AND SHALL EXTEND THE FULL WIDTH OF THE CURB RAMP EXCLUSIVE OF SIDE FLARES.
3. MAXIMUM SLOPE OF LANDING IS 2% IN ANY DIRECTION.
4. RAMP TRANSITIONS BETWEEN WALKS, GUTTERS OR STREETS SHALL BE FLUSH AND FREE OF ABRUPT VERTICAL CHANGES (1/4" MAX.)
5. CONCRETE TO ACHIEVE 4,000 P.S.I. STRENGTH AT 28 DAYS.
6. COMPACT SUBGRADE TO 92% MAXIMUM DENSITY IN ACCORDANCE WITH ASTM D1557.
7. APPLY BRUSH FINISH PERPENDICULAR TO DIRECTION OF SLOPE.
8. REFER TO CONCRETE SIDEWALK DETAIL FOR INFORMATION REGARDING CONTRACTION AND EXPANSION JOINTS.

6 Concrete Handicap Ramp - Mid Block - Flare

SCALE: NTS (321313.36 H2MX2) - U

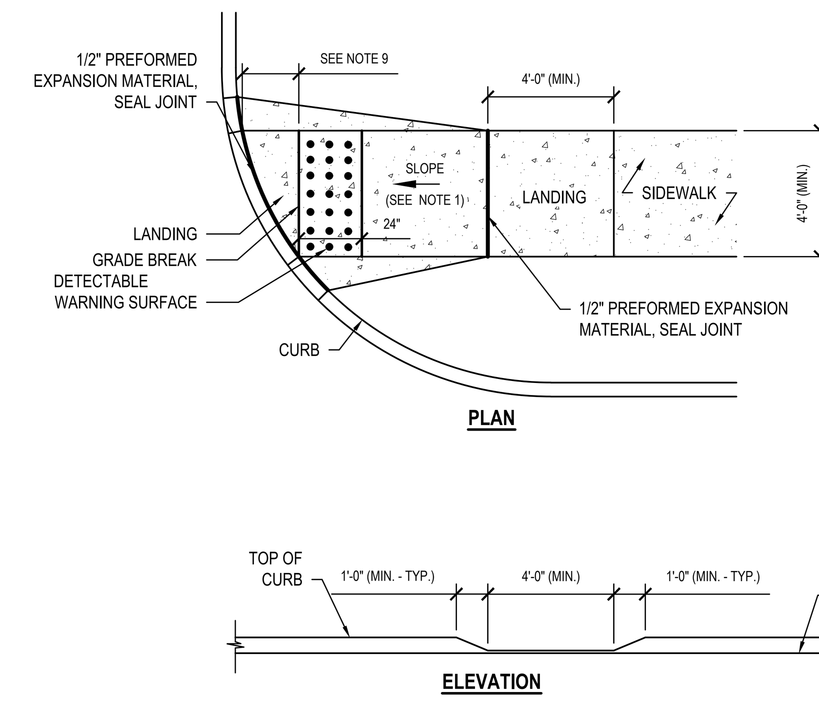

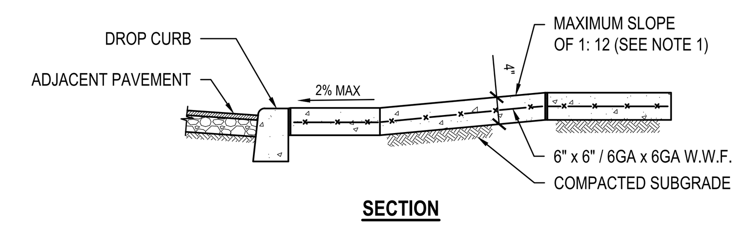

NOTES:

1. DIMENSIONS SHOWN ARE APPLICABLE FOR INSTALLATION WITH 6" CURB REVEAL. DIMENSIONS OF FLARE AND RAMP LENGTH FOR INSTALLATION WITH ALTERNATE CURB REVEALS MAY BE MODIFIED TO MAINTAIN A RAMP SLOPE NOT TO EXCEED 1:12.
2. THE SIZE OF THE DETECTABLE WARNING FIELD SHALL BE 24" IN THE DIRECTION OF TRAVEL AND SHALL EXTEND THE FULL WIDTH OF THE CURB RAMP EXCLUSIVE OF SIDE FLARES.
3. MAXIMUM SLOPE OF LANDING IS 2% IN ANY DIRECTION.
4. RAMP TRANSITIONS BETWEEN WALKS, GUTTERS, OR STREETS SHALL BE FLUSH AND FREE OF ABRUPT VERTICAL CHANGES (1/4" MAX)
5. CONCRETE TO ACHIEVE 4,000 P.S.I. STRENGTH AT 28 DAYS.
6. COMPACT SUBGRADE TO 92% MAXIMUM DENSITY IN ACCORDANCE WITH ASTM D1557.
7. APPLY BROOM FINISH PERPENDICULAR TO DIRECTION OF SLOPE.
8. REFER TO CONCRETE SIDEWALK DETAIL FOR INFORMATION REGARDING CONTRACTION AND EXPANSION JOINTS
9. IF DISTANCE FROM GRADE BREAK IS GREATER THAN OR EQUAL TO 5 FEET, DETECTABLE WARNING SURFACE IS TO BE PLACED ALONG THE RADIUS OF THE CURB.

7 Concrete Handicap Ramp - Corner - Parallel - Offset

SCALE: NTS (321313.36 H2MX5) - U

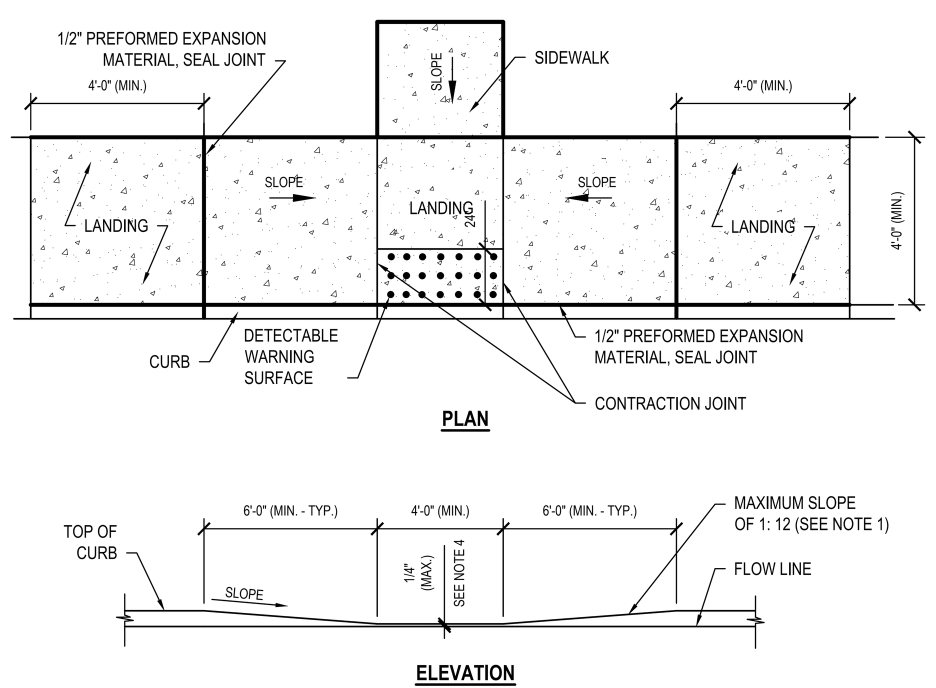

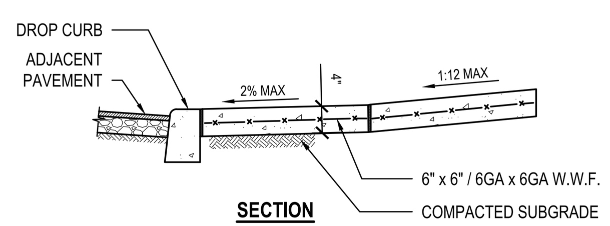

NOTES:

1. DIMENSIONS SHOWN ARE APPLICABLE FOR INSTALLATION WITH 6" CURB REVEAL. DIMENSIONS OF FLARE AND RAMP LENGTH FOR INSTALLATION WITH ALTERNATE CURB REVEALS MAY BE MODIFIED TO MAINTAIN A RAMP SLOPE NOT TO EXCEED 1:12.
2. THE SIZE OF THE DETECTABLE WARNING FIELD SHALL BE 24" IN THE DIRECTION OF TRAVEL AND SHALL EXTEND THE FULL WIDTH OF THE CURB RAMP EXCLUSIVE OF SIDE FLARES.
3. MAXIMUM SLOPE OF LANDING IS 2% IN ANY DIRECTION.
4. RAMP TRANSITIONS BETWEEN WALKS, GUTTERS, OR STREETS SHALL BE FLUSH AND FREE OF ABRUPT VERTICAL CHANGES (1/4" MAX)
5. OMIIT CURB FOR INSTALLATIONS ADJACENT TO BUILDING FOUNDATIONS.
6. CONCRETE TO ACHIEVE 4,000 P.S.I. STRENGTH AT 28 DAYS.
7. COMPACT SUBGRADE TO 92% MAXIMUM DENSITY IN ACCORDANCE WITH ASTM D1557.
8. APPLY BRUSH FINISH PERPENDICULAR TO DIRECTION OF SLOPE.
9. REFER TO CONCRETE SIDEWALK DETAIL FOR INFORMATION REGARDING CONTRACTION AND EXPANSION JOINTS.

8 Concrete Handicap Ramp - Mid Block - Parallel

SCALE: NTS (321313.36 H2MX3) - R

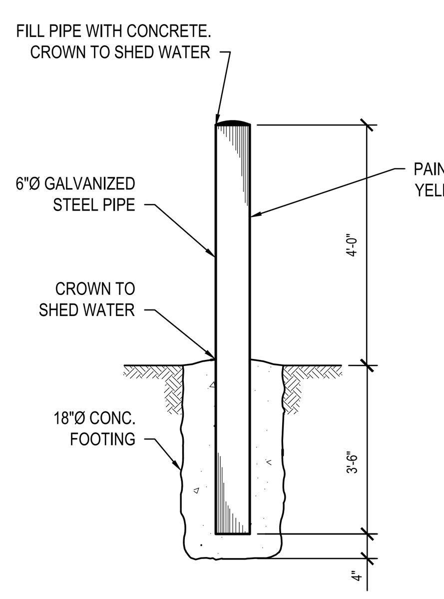

NOTE:

1. CONCRETE TO ACHIEVE 4,000 PSI STRENGTH AT 28 DAYS.

9 Steel Bollard - 6" Diameter

SCALE: NTS (323613.00 H2MX2)

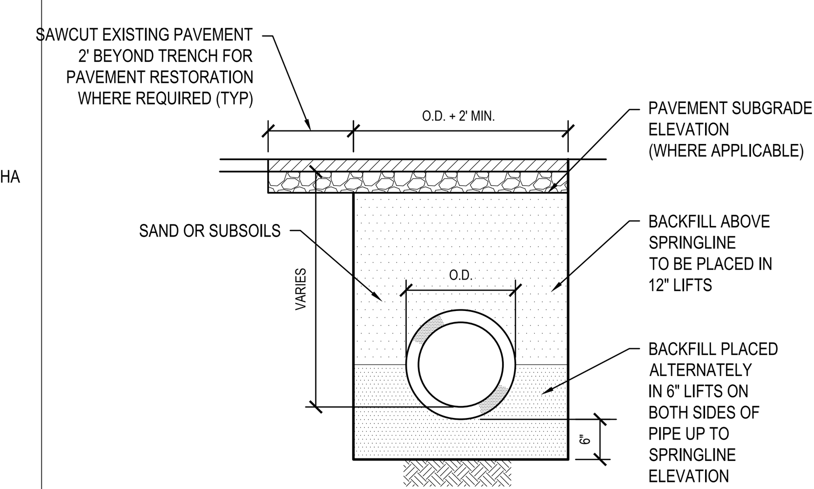

NOTES:

1. IF DEPTH OF TRENCH EXCEEDS 5', THE CONTRACTOR MUST PROVIDE SHEETING AND BRACING OR A SHEETING BOX IN ACCORDANCE WITH OSHA REGULATIONS. AS AN ALTERNATIVE, IF PERMITTED BY THE ENGINEER, THE TRENCH WALLS MAY BE CUT BACK TO A 1:1 SLOPE OR THE NATURAL ANGLE OF REPOSE FOR THE SOIL, WHICHEVER IS GREATER.
2. WITHIN 9" OF PAVEMENT SUBGRADE ELEVATION (WHERE APPLICABLE) COMPACT BACKFILL TO 92% MAXIMUM DENSITY IN ACCORDANCE WITH ASTM D1557. ALL OTHER BACKFILL MATERIAL TO BE COMPACTED TO 90% MAXIMUM DENSITY IN ACCORDANCE WITH ASTM D1557.

10 Pipe Trench

SCALE: NTS (312333.00 H2MX1) - U

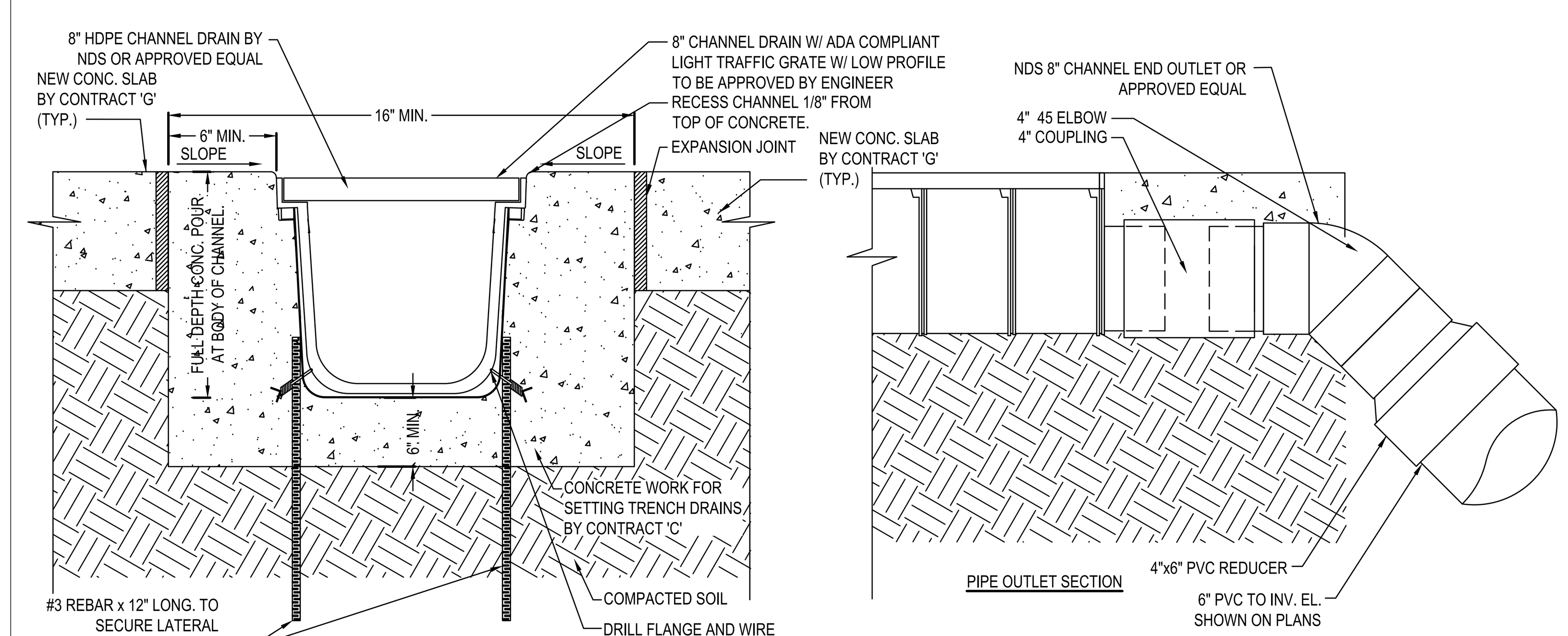

1. SLOPE INVERT OF TRENCH DRAIN TOWARDS PIPE OUTLET.
2. PROVIDE END SECTION AT UPSTREAM END OF TRENCH DRAIN.
3. CONCRETE TO ACHIEVE 4000 PSI STRENGTH AT 28 DAYS AND INSTALLED PER MANUFACTURER SPECIFICATIONS.
4. COMPACT SUBGRADE TO 95% MAXIMUM DENSITY IN ACCORDANCE WITH ASTM D1557.
5. CHANNELS TO BE INSTALLED WITH GRATE. GRATE TO BE PROTECTED FROM CONCRETE POUR.
6. INSTALLATION TO BE COMPLETED IN ACCORDANCE WITH MANUFACTURER'S SPECIFICATIONS.

11 Trench Drain - HDPE (By Contract 'C' and 'G')

SCALE: NTS

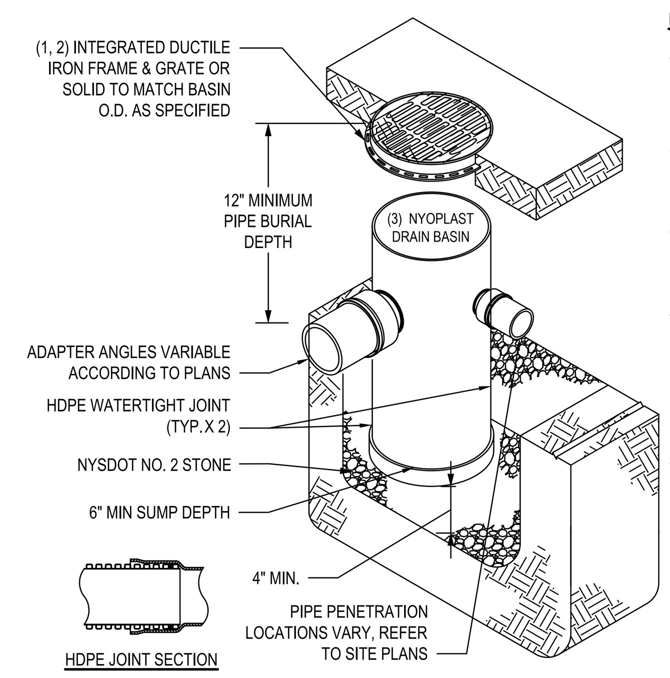

NOTES:

1. GRATES/SOLID COVER SHALL BE DUCTILE IRON PER ASTM A536 GRADE 70-50-05.
2. FRAMES SHALL BE DUCTILE IRON PER ASTM A536 GRADE 70-50-05.
3. DRAIN BASIN TO BE CUSTOM MANUFACTURED ACCORDING TO PLAN DETAILS.
4. DRAINAGE CONNECTION STUB JOINT TIGHTNESS SHALL CONFORM TO ASTM D3212 FOR CORRUGATED HDPE (ADS N-12/HANCOR DUAL WALL), N-12 HP & PVC SEWER.
5. THE BACKFILL MATERIAL SHALL BE CRUSHED STONE OR OTHER GRANULAR MATERIAL MEETING THE REQUIREMENTS OF CLASS I, CLASS II, OR CLASS III MATERIAL AS DEFINED IN ASTM D2321. BEDDING & BACKFILL FOR SURFACE DRAINAGE INLETS SHALL BE PLACED & COMPACTED UNIFORMLY IN ACCORDANCE WITH ASTM D2321.

12 Nyoplast Drainage Structure

SCALE: NTS

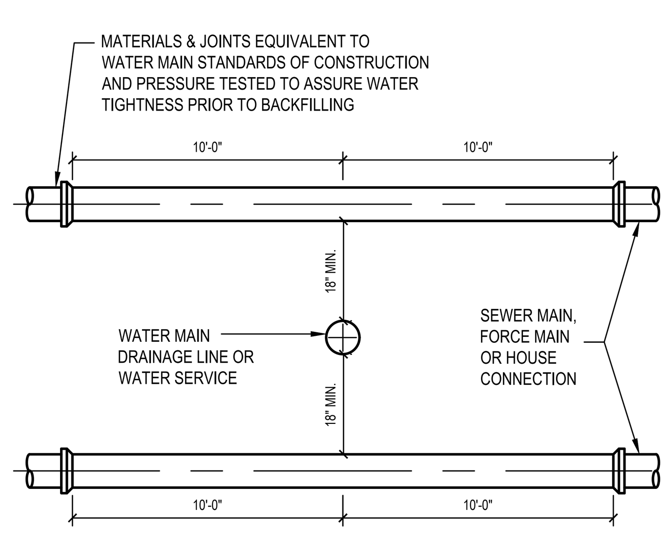

NOTE:

HORIZONTAL SEPARATION BETWEEN SEWER LINES AND WATER LINES SHALL BE 10 FOOT MINIMUM. WHEN 10' SEPARATION CAN NOT BE ACHIVED. CONTRACTOR TO ENCASE MAIN IN ACCORDANCE WITH DETAIL 1, SHEET C504

13 Sewer Crossing

SCALE: NTS

NOTES:

1. CAST IRON FRAME AND COVER MUST BE CAPABLE OF SUPPORTING THE AASHTO HS-20 HIGHWAY LOADING.
2. CONCRETE TO ACHIEVE 4,000 P.S.I. STRENGTH AT 28 DAYS.
3. CONCRETE PAD MAY BE OMITTED FOR CLEANOUTS IN CONCRETE SIDEWALKS.

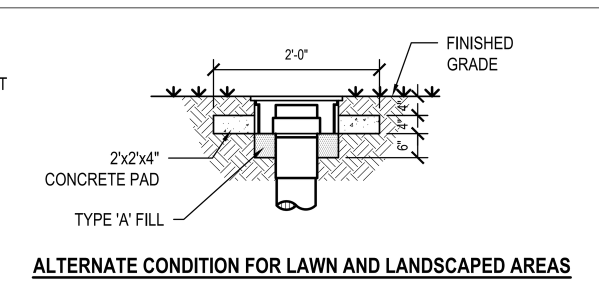

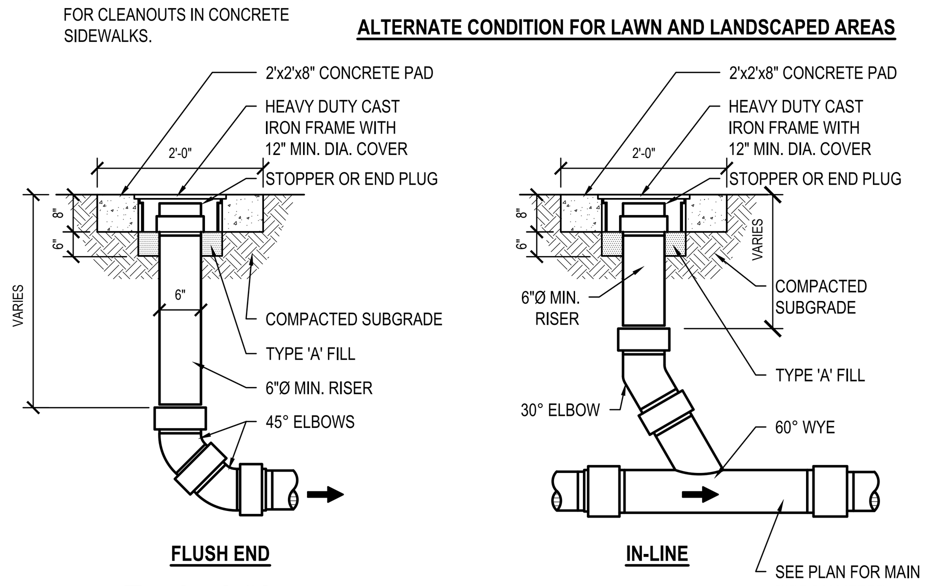

14 Typical Cleanout

SCALE: NTS

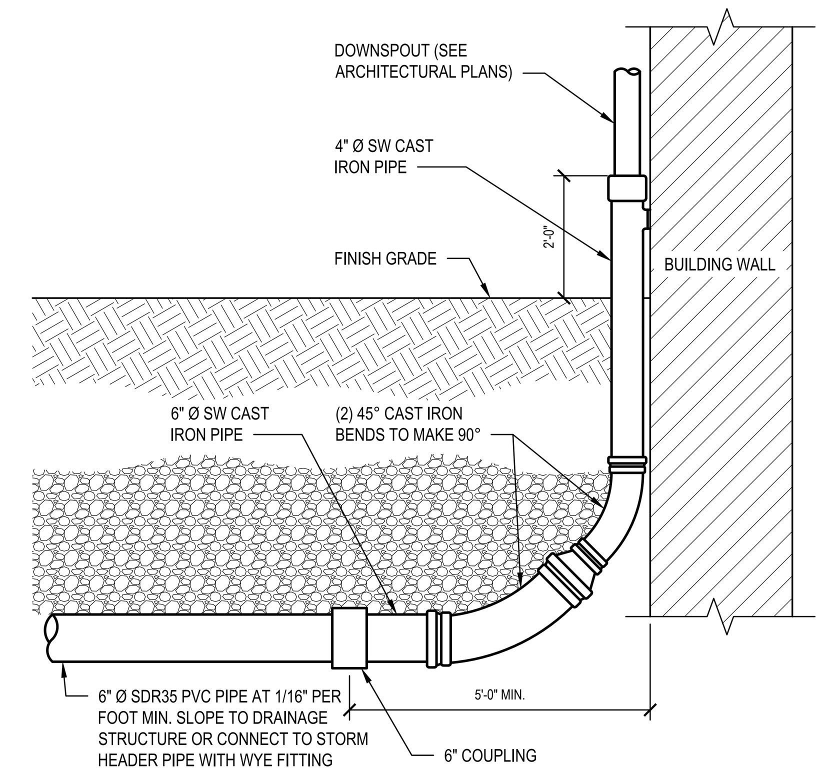

15 Downspout Boot

SCALE: NTS 334211.33

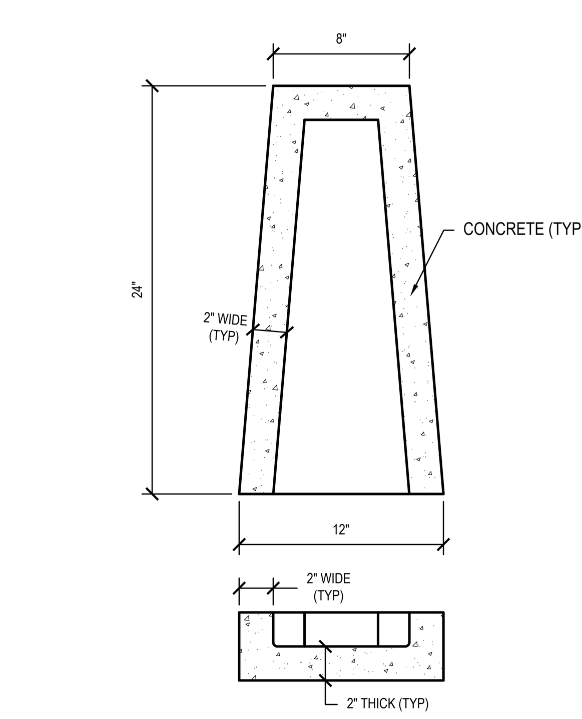

NOTE:

SPLASH BLOCKS TO BE LOCATED AT ALL DOWNSPOUTS DISCHARGING TO GRADE AND DIRECTED TOWARD SWALES OR DRAINAGE IMPROVEMENTS.

16 Splash Block

SCALE: NTS 334242 H2MX1

H2M architects + engineers

538 Broad Hollow Road, 4th Floor East
Melville, NY 11747
631.756.8000 • www.h2m.com
NY Architecture & Landscape Architecture: No Certificate Required
NY Engineering Certificate of Authorization No. 0018438

CONSULTANTS:

MARK	DATE	DESCRIPTION

STATE OF NEW YORK · MATTHEW RONALD MOHLIN · 071569 · LICENSED PROFESSIONAL ENGINEER

MATTHEW R. MOHLIN, P.E.
NY PROFESSIONAL ENGINEER Lic. No. 071569
30/09/2026 EXP. DATE
"IN ACCORDANCE WITH ARTICLE 145, SECTION 7209 OF THE NYS EDUCATION LAW, ALTERATION OF THIS DOCUMENT EXCEPT BY LICENSE PROFESSIONAL IS ILLEGAL"

DESIGNED BY: SFP	DRAWN BY: SFP/KMG	CHECKED BY:	REVIEWED BY: MRM
PROJECT No.: WPSD2203	DATE: MARCH 2025	SCALE: AS SHOWN	

CLIENT

White Plains City School District

ADDITION AT WHITE PLAINS HIGH SCHOOL

550 NORTH STREET
WHITE PLAINS, NY 10605

SED 66-22-00-01-0-016-030

CONTRACT

CONTRACT C & G
CIVIL / SITE CONSTRUCTION
GENERAL CONSTRUCTION

STATUS

FINAL BID DOCUMENT

SHEET TITLE

SITE DETAILS

DRAWING No.

C 501.00

X:\WPSD (White Plains Central School District) - 10991\WPSD 2203 - (HS Addition)\02-BIM-CADD\Con-docs\civil\08_C501 SITE DETAILS.dwg Last Modified: Feb 21, 2025 - 3:19pm Plotted on: Feb 21, 2025 - 3:20pm By speters

ACCEPTABLE FILL MATERIALS: STORMTECH MC-3500 CHAMBER SYSTEMS

MATERIAL LOCATION		DESCRIPTION	AASHTO MATERIAL CLASSIFICATIONS	COMPACTION / DENSITY REQUIREMENT
D	**FINAL FILL:** FILL MATERIAL FOR LAYER 'D' STARTS FROM THE TOP OF THE 'C' LAYER TO THE BOTTOM OF FLEXIBLE PAVEMENT OR UNPAVED FINISHED GRADE ABOVE. NOTE THAT PAVEMENT SUBBASE MAY BE PART OF THE 'D' LAYER	ANY SOIL/ROCK MATERIALS, NATIVE SOILS, OR PER ENGINEER'S PLANS. CHECK PLANS FOR PAVEMENT SUBGRADE REQUIREMENTS.	N/A	PREPARE PER SITE DESIGN ENGINEER'S PLANS. PAVED INSTALLATIONS MAY HAVE STRINGENT MATERIAL AND PREPARATION REQUIREMENTS.
C	**INITIAL FILL:** FILL MATERIAL FOR LAYER 'C' STARTS FROM THE TOP OF THE EMBEDMENT STONE ('B' LAYER) TO 24" (600 mm) ABOVE THE TOP OF THE CHAMBER. NOTE THAT PAVEMENT SUBBASE MAY BE A PART OF THE 'C' LAYER.	GRANULAR WELL-GRADED SOIL/AGGREGATE MIXTURES, <35% FINES OR PROCESSED AGGREGATE. MOST PAVEMENT SUBBASE MATERIALS CAN BE USED IN LIEU OF THIS LAYER.	AASHTO M145[1] A-1, A-2-4, A-3 OR AASHTO M43[1] 3, 357, 4, 467, 5, 56, 57, 6, 67, 68, 7, 78, 8, 89, 9, 10	BEGIN COMPACTIONS AFTER 24" (600 mm) OF MATERIAL OVER THE CHAMBERS IS REACHED. COMPACT ADDITIONAL LAYERS IN 12" (300 mm) MAX LIFTS TO A MIN. 95% PROCTOR DENSITY FOR WELL GRADED MATERIAL AND 95% RELATIVE DENSITY FOR PROCESSED AGGREGATE MATERIALS.
B	**EMBEDMENT STONE:** FILL SURROUNDING THE CHAMBERS FROM THE FOUNDATION STONE ('A' LAYER) TO THE 'C' LAYER ABOVE.	CLEAN, CRUSHED, ANGULAR STONE	AASHTO M43[1] 3, 4	NO COMPACTION REQUIRED.
A	**FOUNDATION STONE:** FILL BELOW CHAMBERS FROM THE SUBGRADE UP TO THE FOOT (BOTTOM) OF THE CHAMBER.	CLEAN, CRUSHED, ANGULAR STONE	AASHTO M43[1] 3, 4	PLATE COMPACT OR ROLL TO ACHIEVE A FLAT SURFACE.[2,3]

PLEASE NOTE:
1. THE LISTED AASHTO DESIGNATIONS ARE FOR GRADATIONS ONLY. THE STONE MUST ALSO BE CLEAN, CRUSHED, ANGULAR. FOR EXAMPLE, A SPECIFICATION FOR #4 STONE WOULD STATE: "CLEAN, CRUSHED, ANGULAR NO. 4 (AASHTO M43) STONE".
2. STORMTECH COMPACTION REQUIREMENTS ARE MET FOR 'A' LOCATION MATERIALS WHEN PLACED AND COMPACTED IN 9" (230 mm) (MAX) LIFTS USING TWO FULL COVERAGES WITH A VIBRATORY COMPACTOR.
3. WHERE INFILTRATION SURFACES MAY BE COMPROMISED BY COMPACTION, FOR STANDARD DESIGN LOAD CONDITIONS, A FLAT SURFACE MAY BE ACHIEVED BY RAKING OR DRAGGING WITHOUT COMPACTION EQUIPMENT. FOR SPECIAL LOAD DESIGNS, CONTACT STORMTECH FOR COMPACTION REQUIREMENTS.
4. ONCE LAYER 'C' IS PLACED, ANY SOIL/MATERIAL CAN BE PLACED IN LAYER 'D' UP TO THE FINISHED GRADE. MOST PAVEMENT SUBBASE SOILS CAN BE USED TO REPLACE THE MATERIAL REQUIREMENTS OF LAYER 'C' OR 'D' AT THE SITE DESIGN ENGINEER'S DISCRETION.

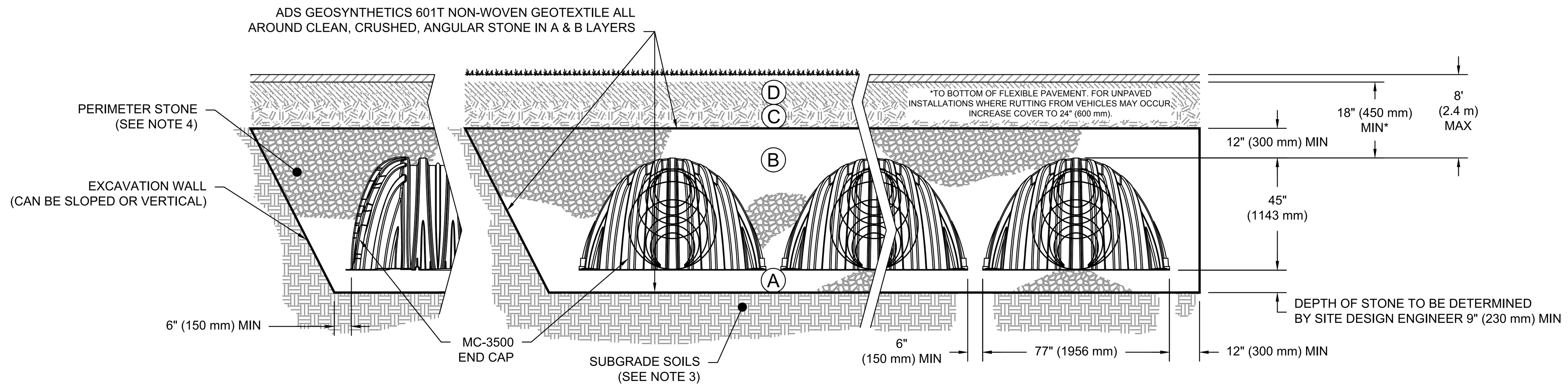

NOTES:

1. CHAMBERS SHALL MEET THE REQUIREMENTS OF ASTM F2418, "STANDARD SPECIFICATION FOR POLYPROPYLENE (PP) CORRUGATED WALL STORMWATER COLLECTION CHAMBERS" CHAMBER CLASSIFICATION 45x76 DESIGNATION SS.
2. MC-3500 CHAMBERS SHALL BE DESIGNED IN ACCORDANCE WITH ASTM F2787 "STANDARD PRACTICE FOR STRUCTURAL DESIGN OF THERMOPLASTIC CORRUGATED WALL STORMWATER COLLECTION CHAMBERS".
3. THE SITE DESIGN ENGINEER IS RESPONSIBLE FOR ASSESSING THE BEARING RESISTANCE (ALLOWABLE BEARING CAPACITY) OF THE SUBGRADE SOILS AND THE DEPTH OF FOUNDATION STONE WITH CONSIDERATION FOR THE RANGE OF EXPECTED SOIL MOISTURE CONDITIONS.
4. PERIMETER STONE MUST BE EXTENDED HORIZONTALLY TO THE EXCAVATION WALL FOR BOTH VERTICAL AND SLOPED EXCAVATION WALLS.
5. REQUIREMENTS FOR HANDLING AND INSTALLATION:
   - TO MAINTAIN THE WIDTH OF CHAMBERS DURING SHIPPING AND HANDLING, CHAMBERS SHALL HAVE INTEGRAL, INTERLOCKING STACKING LUGS.
   - TO ENSURE A SECURE JOINT DURING INSTALLATION AND BACKFILL, THE HEIGHT OF THE CHAMBER JOINT SHALL NOT BE LESS THAN 3".
   - TO ENSURE THE INTEGRITY OF THE ARCH SHAPE DURING INSTALLATION, a) THE ARCH STIFFNESS CONSTANT AS DEFINED IN SECTION 6.2.8 OF ASTM F2418 SHALL BE GREATER THAN OR EQUAL TO 500 LBS/FT/%. AND b) TO RESIST CHAMBER DEFORMATION DURING INSTALLATION AT ELEVATED TEMPERATURES (ABOVE 73° F / 23° C), CHAMBERS SHALL BE PRODUCED FROM REFLECTIVE GOLD OR YELLOW COLORS.

1 Chamber Cross Section
SCALE: NTS

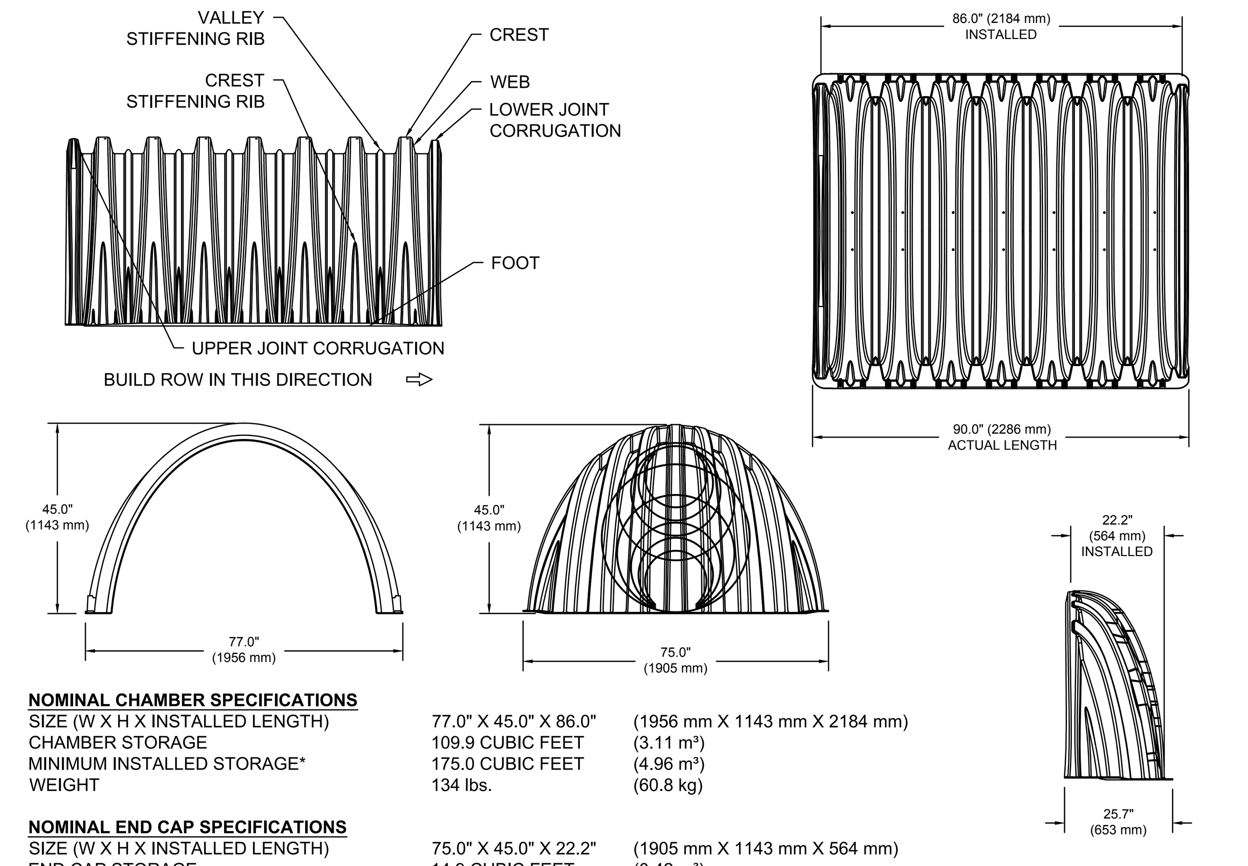

NOMINAL CHAMBER SPECIFICATIONS

SIZE (W X H X INSTALLED LENGTH)	77.0" X 45.0" X 86.0"	(1956 mm X 1143 mm X 2184 mm)
CHAMBER STORAGE	109.9 CUBIC FEET	(3.11 m³)
MINIMUM INSTALLED STORAGE*	175.0 CUBIC FEET	(4.96 m³)
WEIGHT	134 lbs.	(60.8 kg)

NOMINAL END CAP SPECIFICATIONS

SIZE (W X H X INSTALLED LENGTH)	75.0" X 45.0" X 22.2"	(1905 mm X 1143 mm X 564 mm)
END CAP STORAGE	14.9 CUBIC FEET	(0.42 m³)
MINIMUM INSTALLED STORAGE*	45.1 CUBIC FEET	(1.28 m³)
WEIGHT	49 lbs.	(22.2 kg)

*ASSUMES 12" (305 mm) STONE ABOVE, 9" (229 mm) STONE FOUNDATION, 6" (152 mm) STONE BETWEEN CHAMBERS, 6" (152 mm) STONE PERIMETER IN FRONT OF END CAPS AND 40% STONE POROSITY.

PARTIAL CUT HOLES AT BOTTOM OF END CAP FOR PART NUMBERS ENDING WITH "B"
PARTIAL CUT HOLES AT TOP OF END CAP FOR PART NUMBERS ENDING WITH "T"
END CAPS WITH A PREFABRICATED WELDED STUB END WITH "W"
END CAPS WITH A WELDED CROWN PLATE END WITH "C"

PART #	STUB	B	C
MC3500IEPP06T	6" (150 mm)	33.21" (844 mm)	---
MC3500IEPP06B		---	0.66" (17 mm)
MC3500IEPP08T	8" (200 mm)	31.16" (791 mm)	---
MC3500IEPP08B		---	0.81" (21 mm)
MC3500IEPP10T	10" (250 mm)	29.04" (738 mm)	---
MC3500IEPP10B		---	0.93" (24 mm)
MC3500IEPP12T	12" (300 mm)	26.36" (670 mm)	---
MC3500IEPP12B		---	1.35" (34 mm)
MC3500IEPP15T	15" (375 mm)	23.39" (594 mm)	---
MC3500IEPP15B		---	1.50" (38 mm)
MC3500IEPP18TC	18" (450 mm)	20.03" (509 mm)	---
MC3500IEPP18TW			
MC3500IEPP18BC		---	1.77" (45 mm)
MC3500IEPP18BW			
MC3500IEPP24TC	24" (600 mm)	14.48" (368 mm)	---
MC3500IEPP24TW			
MC3500IEPP24BC		---	2.06" (52 mm)
MC3500IEPP24BW			
MC3500IEPP30BC	30" (750 mm)	---	2.75" (70 mm)

NOTE: ALL DIMENSIONS ARE NOMINAL

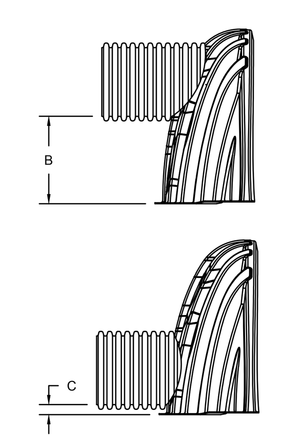

CUSTOM PARTIAL CUT INVERTS ARE AVAILABLE UPON REQUEST. INVENTORIED MANIFOLDS INCLUDE 12-24" (300-600 mm) SIZE ON SIZE AND 15-48" (375-1200 mm) ECCENTRIC MANIFOLDS. CUSTOM INVERT LOCATIONS ON THE MC-3500 END CAP CUT IN THE FIELD ARE NOT RECOMMENDED FOR PIPE SIZES GREATER THAN 10" (250 mm). THE INVERT LOCATION IN COLUMN 'B' ARE THE HIGHEST POSSIBLE FOR THE PIPE SIZE.

2 Chamber Technical Specifications
SCALE: NTS

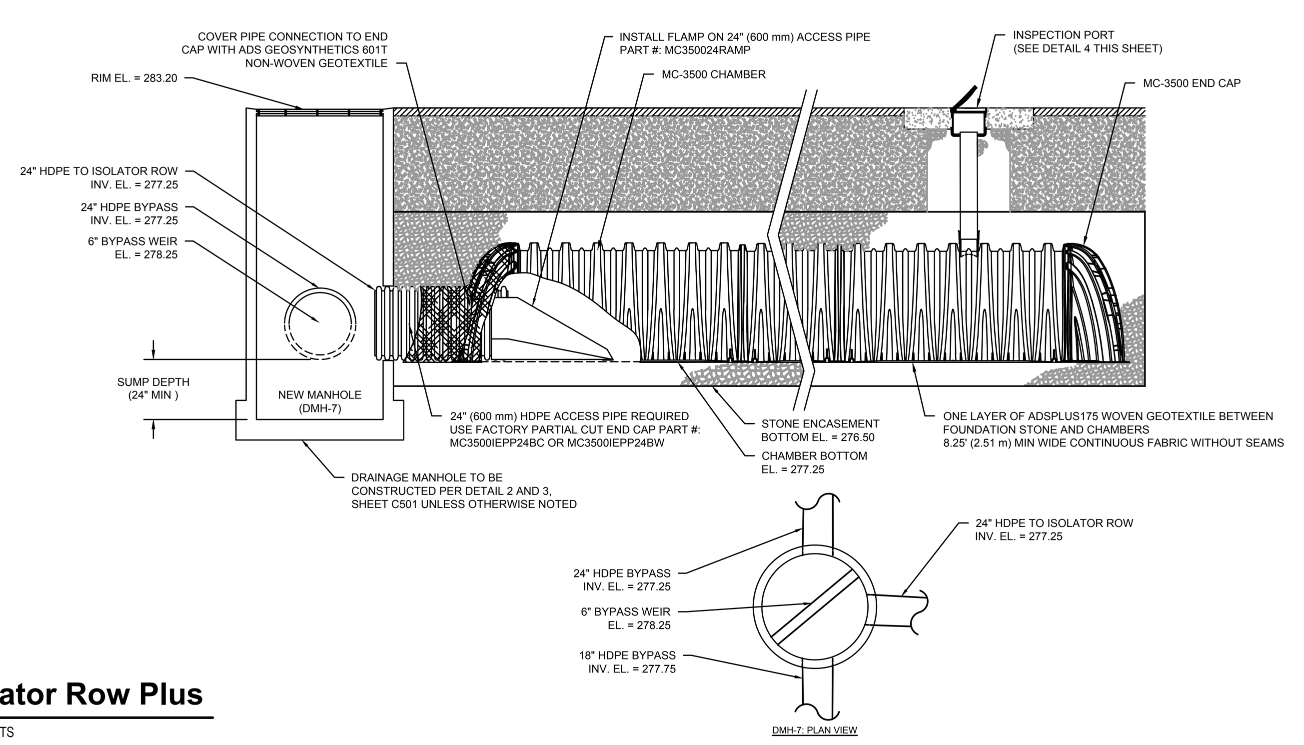

3 Isolator Row Plus
SCALE: NTS

INSPECTION & MAINTENANCE

STEP 1) INSPECT ISOLATOR ROW PLUS FOR SEDIMENT
- A. INSPECTION PORTS (IF PRESENT)
  - A.1. REMOVE/OPEN LID ON NYLOPLAST INLINE DRAIN
  - A.2. REMOVE AND CLEAN FLEXSTORM FILTER IF INSTALLED
  - A.3. USING A FLASHLIGHT AND STADIA ROD, MEASURE DEPTH OF SEDIMENT AND RECORD ON MAINTENANCE LOG
  - A.4. LOWER A CAMERA INTO ISOLATOR ROW PLUS FOR VISUAL INSPECTION OF SEDIMENT LEVELS (OPTIONAL)
  - A.5. IF SEDIMENT IS AT, OR ABOVE, 3" (80 mm) PROCEED TO STEP 2. IF NOT, PROCEED TO STEP 3.
- B. ALL ISOLATOR PLUS ROWS
  - B.1. REMOVE COVER FROM STRUCTURE AT UPSTREAM END OF ISOLATOR ROW PLUS
  - B.2. USING A FLASHLIGHT, INSPECT DOWN THE ISOLATOR ROW PLUS THROUGH OUTLET PIPE
    - i) MIRRORS ON POLES OR CAMERAS MAY BE USED TO AVOID A CONFINED SPACE ENTRY
    - ii) FOLLOW OSHA REGULATIONS FOR CONFINED SPACE ENTRY IF ENTERING MANHOLE
  - B.3. IF SEDIMENT IS AT, OR ABOVE, 3" (80 mm) PROCEED TO STEP 2. IF NOT, PROCEED TO STEP 3.

STEP 2) CLEAN OUT ISOLATOR ROW PLUS USING THE JETVAC PROCESS
- A. A FIXED CULVERT CLEANING NOZZLE WITH REAR FACING SPREAD OF 45" (1.1 m) OR MORE IS PREFERRED
- B. APPLY MULTIPLE PASSES OF JETVAC UNTIL BACKFLUSH WATER IS CLEAN
- C. VACUUM STRUCTURE SUMP AS REQUIRED

STEP 3) REPLACE ALL COVERS, GRATES, FILTERS, AND LIDS; RECORD OBSERVATIONS AND ACTIONS.

STEP 4) INSPECT AND CLEAN BASINS AND MANHOLES UPSTREAM OF THE STORMTECH SYSTEM.

NOTES

1. INSPECT EVERY 6 MONTHS DURING THE FIRST YEAR OF OPERATION. ADJUST THE INSPECTION INTERVAL BASED ON PREVIOUS OBSERVATIONS OF SEDIMENT ACCUMULATION AND HIGH WATER ELEVATIONS.
2. CONDUCT JETTING AND VACTORING ANNUALLY OR WHEN INSPECTION SHOWS THAT MAINTENANCE IS NECESSARY.

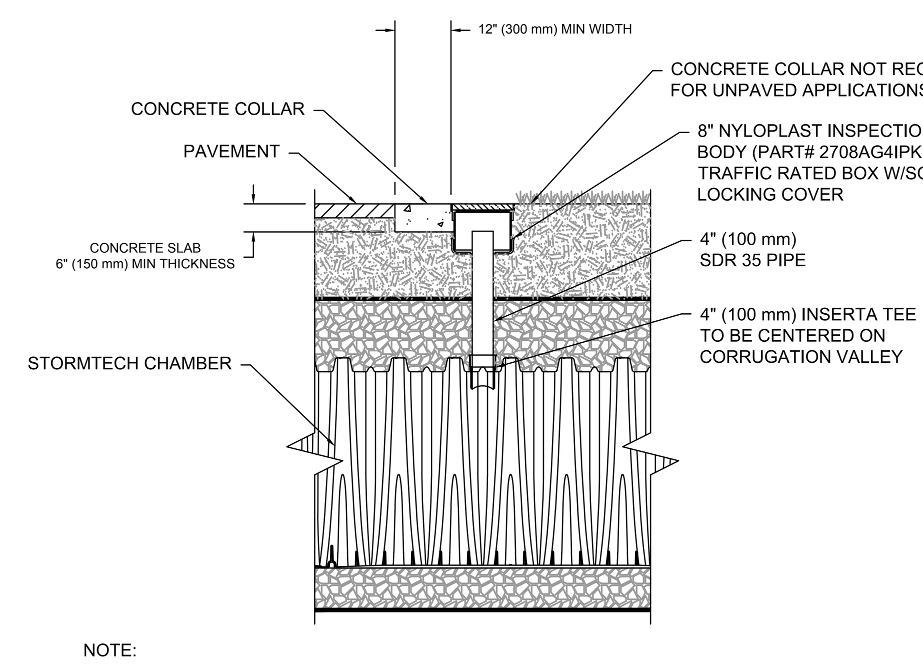

NOTE:
INSPECTION PORTS MAY BE CONNECTED THROUGH ANY CHAMBER CORRUGATION VALLEY.

4 4" PVC Inspection Port
SCALE: NTS

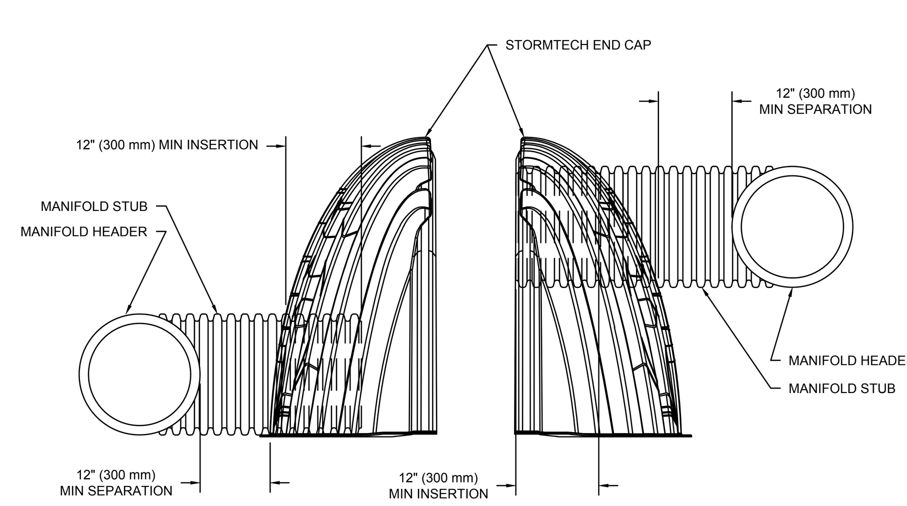

NOTE: MANIFOLD STUB MUST BE LAID HORIZONTAL FOR A PROPER FIT IN END CAP OPENING.

5 End Cap Insertion
SCALE: NTS

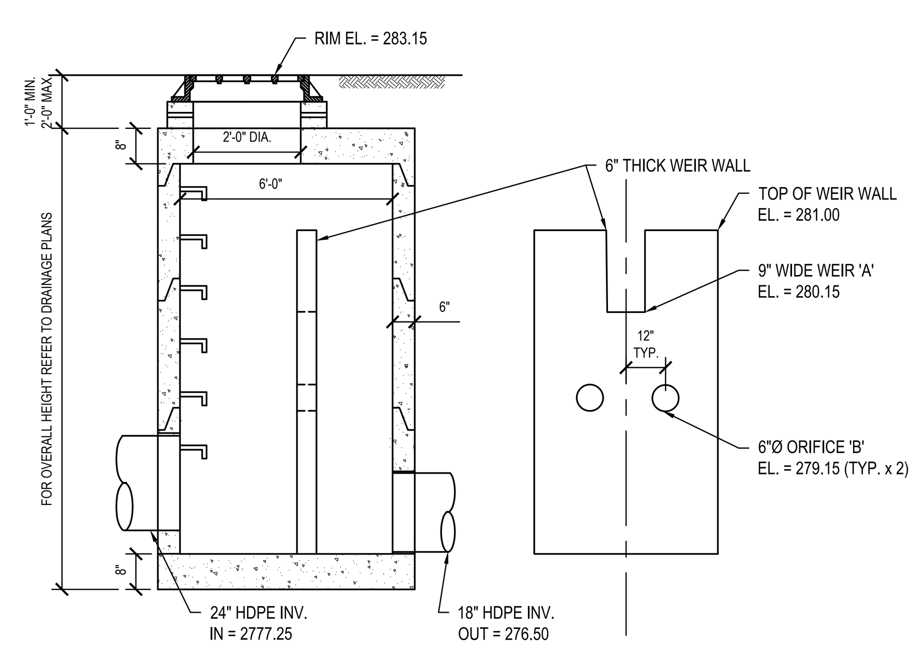

NOTES:
1. UNLESS OTHERWISE SPECIFIED ON THIS DETAIL, MANHOLE TO COMPLY WITH REQUIREMENTS IDENTIFIED IN DETAIL 2 AND 3, SHEET C 501.

6 Outlet Control Structure 1
SCALE: NTS

MC-3500 STORMTECH CHAMBER SPECIFICATIONS

1. CHAMBERS SHALL BE STORMTECH MC-3500.
2. CHAMBERS SHALL BE ARCH-SHAPED AND SHALL BE MANUFACTURED FROM VIRGIN, IMPACT-MODIFIED POLYPROPYLENE COPOLYMERS.
3. CHAMBERS SHALL MEET THE REQUIREMENTS OF ASTM F2418, "STANDARD SPECIFICATION FOR POLYPROPYLENE (PP) CORRUGATED WALL STORMWATER COLLECTION CHAMBERS" CHAMBER CLASSIFICATION 45x76 DESIGNATION SS.
4. CHAMBER ROWS SHALL PROVIDE CONTINUOUS, UNOBSTRUCTED INTERNAL SPACE WITH NO INTERNAL SUPPORTS THAT WOULD IMPEDE FLOW OR LIMIT ACCESS FOR INSPECTION.
5. THE STRUCTURAL DESIGN OF THE CHAMBERS, THE STRUCTURAL BACKFILL, AND THE INSTALLATION REQUIREMENTS SHALL ENSURE THAT THE LOAD FACTORS SPECIFIED IN THE AASHTO LRFD BRIDGE DESIGN SPECIFICATIONS, SECTION 12.12, ARE MET FOR: 1) LONG-DURATION DEAD LOADS AND 2) SHORT-DURATION LIVE LOADS, BASED ON THE AASHTO DESIGN TRUCK WITH CONSIDERATION FOR IMPACT AND MULTIPLE VEHICLE PRESENCES.
6. CHAMBERS SHALL BE DESIGNED, TESTED AND ALLOWABLE LOAD CONFIGURATIONS DETERMINED IN ACCORDANCE WITH ASTM F2787, "STANDARD PRACTICE FOR STRUCTURAL DESIGN OF THERMOPLASTIC CORRUGATED WALL STORMWATER COLLECTION CHAMBERS". LOAD CONFIGURATIONS SHALL INCLUDE: 1) INSTANTANEOUS (<1 MIN) AASHTO DESIGN TRUCK LIVE LOAD ON MINIMUM COVER 2) MAXIMUM PERMANENT (75-YR) COVER LOAD AND 3) ALLOWABLE COVER WITH PARKED (1-WEEK) AASHTO DESIGN TRUCK.
7. REQUIREMENTS FOR HANDLING AND INSTALLATION:
   - TO MAINTAIN THE WIDTH OF CHAMBERS DURING SHIPPING AND HANDLING, CHAMBERS SHALL HAVE INTEGRAL, INTERLOCKING STACKING LUGS.
   - TO ENSURE A SECURE JOINT DURING INSTALLATION AND BACKFILL, THE HEIGHT OF THE CHAMBER JOINT SHALL NOT BE LESS THAN 3".
   - TO ENSURE THE INTEGRITY OF THE ARCH SHAPE DURING INSTALLATION, a) THE ARCH STIFFNESS CONSTANT SHALL BE GREATER THAN OR EQUAL TO 450 LBS/FT/%. THE ASC IS DEFINED IN SECTION 6.2.8 OF ASTM F2418. AND b) TO RESIST CHAMBER DEFORMATION DURING INSTALLATION AT ELEVATED TEMPERATURES (ABOVE 73° F / 23° C), CHAMBERS SHALL BE PRODUCED FROM REFLECTIVE GOLD OR YELLOW COLORS.
8. ONLY CHAMBERS THAT ARE APPROVED BY THE SITE DESIGN ENGINEER WILL BE ALLOWED. UPON REQUEST BY THE SITE DESIGN ENGINEER OR OWNER, THE CHAMBER MANUFACTURER SHALL SUBMIT A STRUCTURAL EVALUATION FOR APPROVAL BEFORE DELIVERING CHAMBERS TO THE PROJECT SITE AS FOLLOWS:
   - THE STRUCTURAL EVALUATION SHALL BE SEALED BY A REGISTERED PROFESSIONAL ENGINEER.
   - THE STRUCTURAL EVALUATION SHALL DEMONSTRATE THAT THE SAFETY FACTORS ARE GREATER THAN OR EQUAL TO 1.95 FOR DEAD LOAD AND 1.75 FOR LIVE LOAD, THE MINIMUM REQUIRED BY ASTM F2787 AND BY SECTIONS 3 AND 12.12 OF THE AASHTO LRFD BRIDGE DESIGN SPECIFICATIONS FOR THERMOPLASTIC PIPE.
   - THE TEST DERIVED CREEP MODULUS AS SPECIFIED IN ASTM F2418 SHALL BE USED FOR PERMANENT DEAD LOAD DESIGN EXCEPT THAT IT SHALL BE THE 75-YEAR MODULUS USED FOR DESIGN.
9. CHAMBERS AND END CAPS SHALL BE PRODUCED AT AN ISO 9001 CERTIFIED MANUFACTURING FACILITY.

IMPORTANT - NOTES FOR THE BIDDING AND INSTALLATION OF MC-3500 CHAMBER SYSTEM

1. STORMTECH MC-3500 CHAMBERS SHALL NOT BE INSTALLED UNTIL THE MANUFACTURER'S REPRESENTATIVE HAS COMPLETED A PRE-CONSTRUCTION MEETING WITH THE INSTALLERS.
2. STORMTECH MC-3500 CHAMBERS SHALL BE INSTALLED IN ACCORDANCE WITH THE "STORMTECH MC-3500/MC-4500 CONSTRUCTION GUIDE".
3. CHAMBERS ARE NOT TO BE BACKFILLED WITH A DOZER OR AN EXCAVATOR SITUATED OVER THE CHAMBERS. STORMTECH RECOMMENDS 3 BACKFILL METHODS:
   - STONESHOOTER LOCATED OFF THE CHAMBER BED.
   - BACKFILL AS ROWS ARE BUILT USING AN EXCAVATOR ON THE FOUNDATION STONE OR SUBGRADE.
   - BACKFILL FROM OUTSIDE THE EXCAVATION USING A LONG BOOM HOE OR EXCAVATOR.
4. THE FOUNDATION STONE SHALL BE LEVELED AND COMPACTED PRIOR TO PLACING CHAMBERS.
5. JOINTS BETWEEN CHAMBERS SHALL BE PROPERLY SEATED PRIOR TO PLACING STONE.
6. MAINTAIN MINIMUM - SPACING BETWEEN THE CHAMBER ROWS.
7. INLET AND OUTLET MANIFOLDS MUST BE INSERTED A MINIMUM OF 12" (300 mm) INTO CHAMBER END CAPS.
8. EMBEDMENT STONE SURROUNDING CHAMBERS MUST BE A CLEAN, CRUSHED, ANGULAR STONE MEETING THE AASHTO M43 DESIGNATION OF #3 OR #4.
9. STONE MUST BE PLACED ON THE TOP CENTER OF THE CHAMBER TO ANCHOR THE CHAMBERS IN PLACE AND PRESERVE ROW SPACING.
10. THE CONTRACTOR MUST REPORT ANY DISCREPANCIES WITH CHAMBER FOUNDATION MATERIALS BEARING CAPACITIES TO THE SITE DESIGN ENGINEER.
11. ADS RECOMMENDS THE USE OF "FLEXSTORM CATCH IT" INSERTS DURING CONSTRUCTION FOR ALL INLETS TO PROTECT THE SUBSURFACE STORMWATER MANAGEMENT SYSTEM FROM CONSTRUCTION SITE RUNOFF.

NOTES FOR CONSTRUCTION EQUIPMENT

1. STORMTECH MC-3500 CHAMBERS SHALL BE INSTALLED IN ACCORDANCE WITH THE "STORMTECH MC-3500/MC-4500 CONSTRUCTION GUIDE".
2. THE USE OF EQUIPMENT OVER MC-3500 CHAMBERS IS LIMITED:
   - NO EQUIPMENT IS ALLOWED ON BARE CHAMBERS.
   - NO RUBBER TIRED LOADER, DUMP TRUCK, OR EXCAVATORS ARE ALLOWED UNTIL PROPER FILL DEPTHS ARE REACHED IN ACCORDANCE WITH THE "STORMTECH MC-3500/MC-4500 CONSTRUCTION GUIDE".
   - WEIGHT LIMITS FOR CONSTRUCTION EQUIPMENT CAN BE FOUND IN THE "STORMTECH MC-3500/MC-4500 CONSTRUCTION GUIDE".
3. FULL 36" (900 mm) OF STABILIZED COVER MATERIALS OVER THE CHAMBERS IS REQUIRED FOR DUMP TRUCK TRAVEL OR DUMPING.

USE OF A DOZER TO PUSH EMBEDMENT STONE BETWEEN THE ROWS OF CHAMBERS MAY CAUSE DAMAGE TO CHAMBERS AND IS NOT AN ACCEPTABLE BACKFILL METHOD. ANY CHAMBERS DAMAGED BY USING THE "DUMP AND PUSH" METHOD ARE NOT COVERED UNDER THE STORMTECH STANDARD WARRANTY.

CONTACT STORMTECH AT 1-888-892-2694 WITH ANY QUESTIONS ON INSTALLATION REQUIREMENTS OR WEIGHT LIMITS FOR CONSTRUCTION EQUIPMENT.

H 2 M architects + engineers
538 Broad Hollow Road, 4th Floor East
Melville, NY 11747
631.756.8000 ▪ www.h2m.com
NY Architecture & Landscape Architecture: No Certificate Required
NY Engineering Certificate of Authorization No. 0018438

CONSULTANTS:

MARK	DATE	DESCRIPTION

30/09/2026 EXP. DATE
MATTHEW R. MOHLIN, P.E.
NY PROFESSIONAL ENGINEER Lic. No. 071569
"IN ACCORDANCE WITH ARTICLE 145, SECTION 7209 OF THE NYS EDUCATION LAW, ALTERATION OF THIS DOCUMENT EXCEPT BY LICENSE PROFESSIONAL IS ILLEGAL"

DESIGNED BY:	DRAWN BY:	CHECKED BY:	REVIEWED BY:
SFP	SFP/KMG		MRM

PROJECT No.:	DATE:	SCALE:
WPSD2203	MARCH 2025	AS SHOWN

CLIENT
White Plains City School District

ADDITION AT WHITE PLAINS HIGH SCHOOL

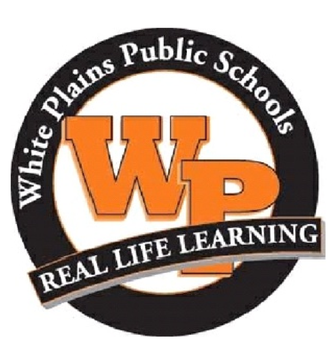

550 NORTH STREET
WHITE PLAINS, NY 10605

SED 66-22-00-01-0-016-030

CONTRACT
CONTRACT C
CIVIL / SITE CONSTRUCTION

STATUS
FINAL BID DOCUMENT

SHEET TITLE
SITE DETAILS

DRAWING No.
C 502.00

X:\WPSD (White Plains Central School District) - 10991\WPSD 2203 - (HS Addition)\02-BIM-CADD\Con-docs\civil\09_C502 SITE DETAILS.dwg Last Modified: Jan 10, 2025 - 9:01am Plotted on: Feb 21, 2025 - 3:20pm By speters

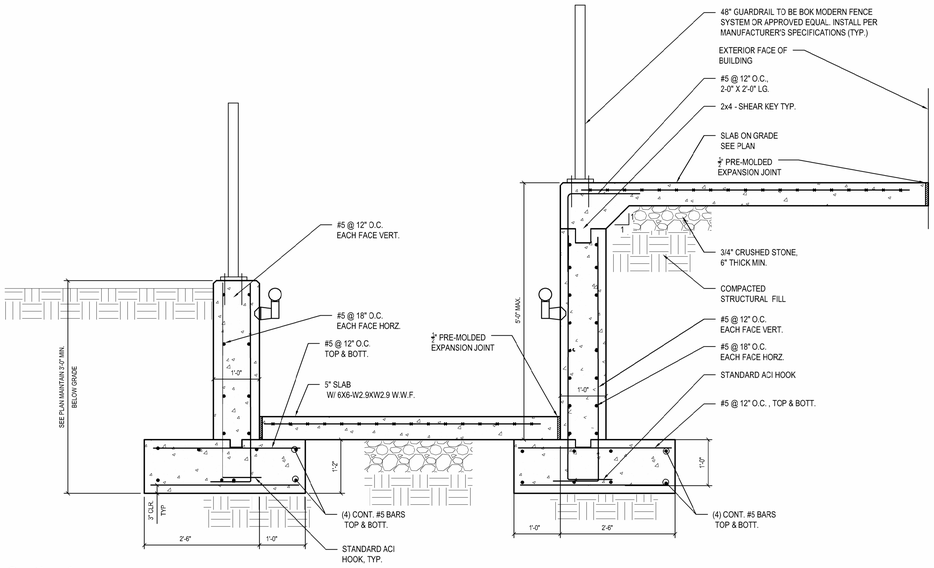

Section 1
SCALE: 1/4"=1'-0"

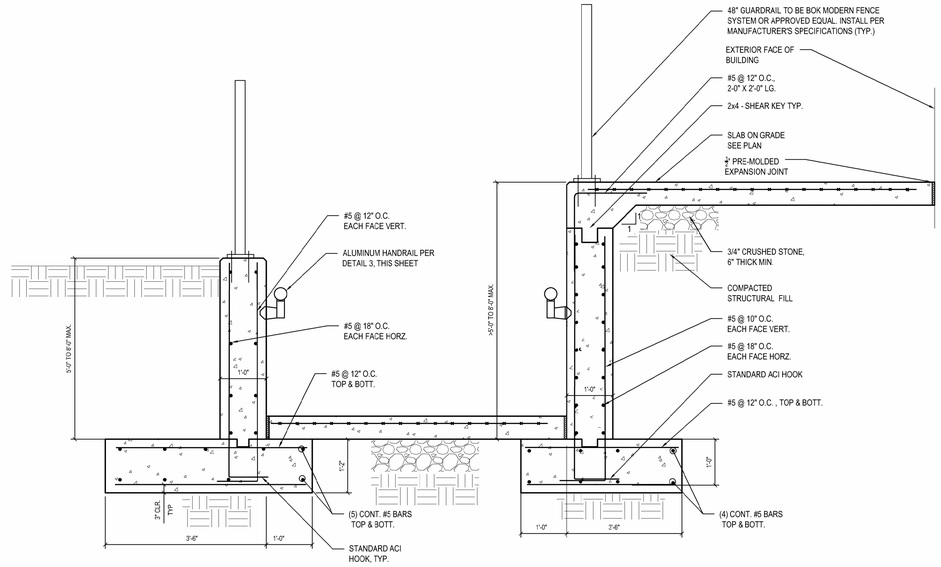

Section 2
SCALE: 1/4"=1'-0"

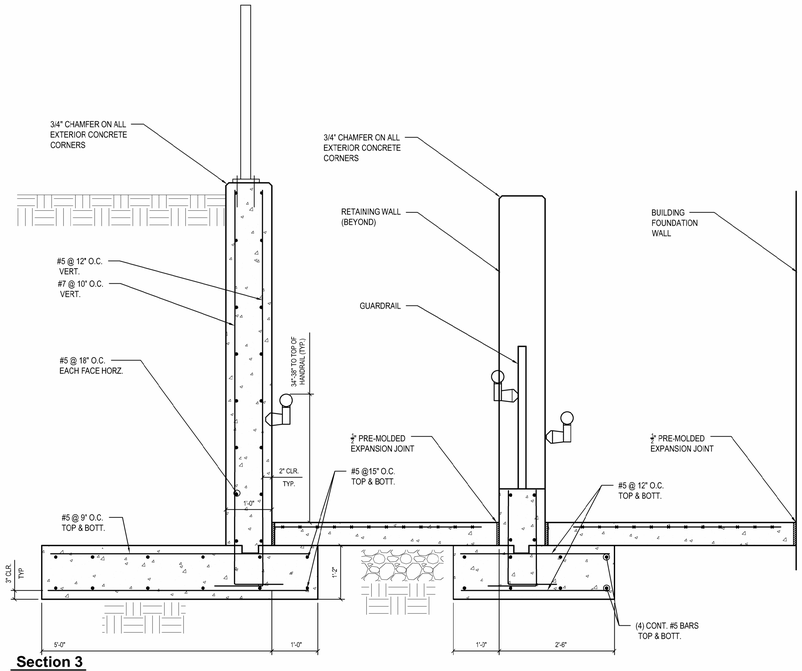

Section 3
SCALE: 1/4"=1'-0"

1 Concrete Basement Ramp (By 'G' Contract)
SCALE: NTS

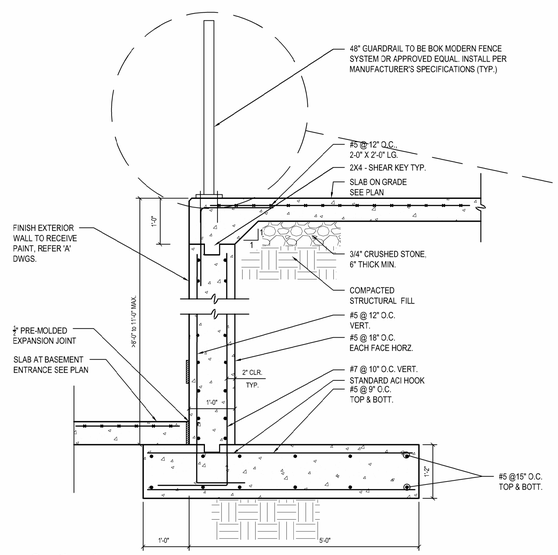

Section 4
SCALE: 1/4"=1'-0"

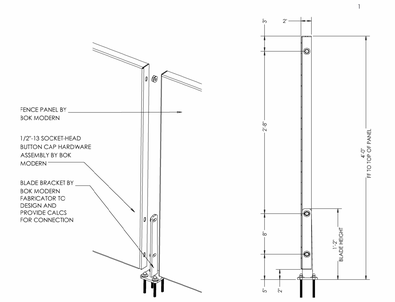

Typical Guardrail Connection

Typical Section View

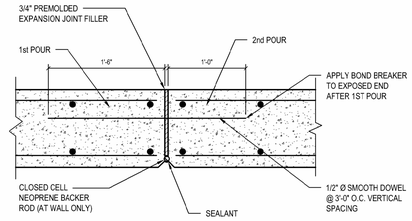

NOTES:

1. EXPANSION JOINTS SHALL BE LOCATED AT A MAXIMUM SPACING OF 20'-0" O.C. IN WALLS. FOOTINGS SHALL BE PLACED CONTINUOUS HORIZONTAL WATERSTOPS AND EXPANSION JOINTS, SIMILAR TO SHOWN.

4 Expansion Joint Detail at Retaining Wall
SCALE: NTS

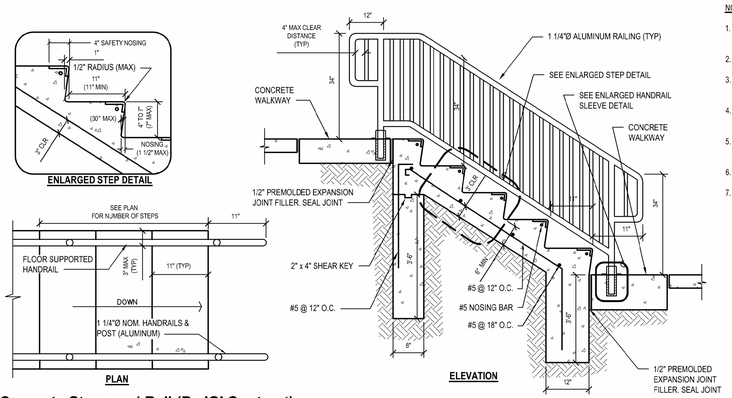

NOTES:

1. WOOD FLOAT AND BRUSH FINISH ON ALL SURFACES ABOVE GRADE.
2. SLOPE TREADS 1/8" PER FOOT (MAX) AWAY FROM RISER.
3. NOSING SHALL HAVE VISUAL CONTRAST FROM THE REMAINDER OF THE STAIR TREAD
4. INSTALL EXPANSION JOINTS AT LOCATION OF INTERMEDIATE RAILINGS
5. FOR TOTAL NUMBER OF STEPS SEE DIMENSIONAL SITE PLAN.
6. CONCRETE TO ACHIEVE 4,000 PSI STRENGTH AT 28 DAYS.
7. COMPACT SUBGRADE TO 95% OF MAXIMUM DENSITY ON ACCORDANCE WITH ASTM D698.

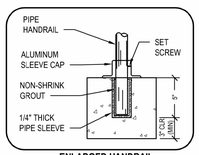

ENLARGED HANDRAIL SLEEVE DETAIL

2 Concrete Steps and Rail (By 'G' Contract)
SCALE: NTS

32°315.13 HIMX1

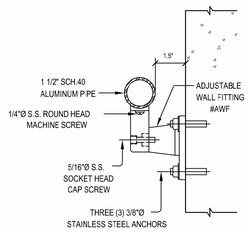

NOTES:

1. INSTALL AND ATTACH HANDRAIL IN ACCORDANCE WITH MANUFACTURERS SPECIFICATIONS.
2. MAINTAIN 1.5" CLEARANCE BETWEEN FACE OF WALL/GUARDRAIL AND HANDRAIL (TYP. THROUGHOUT)
3. COLOR AND FINISH PER OWNER PREFERENCE.

3 Aluminum Handrail (By 'G' Contract)
SCALE: NTS

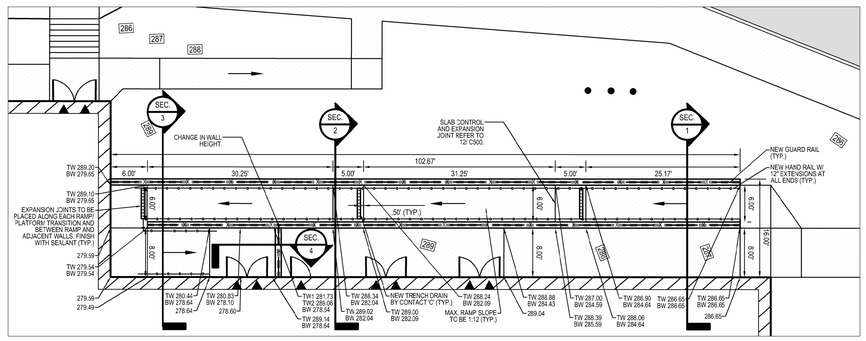

Plan & Grading View (By 'G' Contract)
SCALE: 1"=20'-0"

GRAPHIC SCALE

10 0 5 10

(IN FEET)
1 inch = 10 ft.

architects + engineers

538 Broad Hollow Road, 4th Floor East
Melville, NY 11747
631.756.8000 • www.h2m.com
NY Architecture & Landscape Architecture: No Certificate Required
NY Engineering Certificate of Authorization No. 0018438

CONSULTANTS:

MARK	DATE	DESCRIPTION

STATE OF NEW YORK · SCOTT D. LEHN · 087145 · LICENSED PROFESSIONAL ENGINEER

02/28/2027
EXP. DATE

SCOTT D. LEHN, P.E.
NY PROFESSIONAL ENGINEER Lic. No. 087145

"IN ACCORDANCE WITH ARTICLE 145, SECTION 7209 OF THE NYS EDUCATION LAW, ALTERATION OF THIS DOCUMENT EXCEPT BY LICENSE PROFESSIONAL IS ILLEGAL"

DESIGNED BY:	DRAWN BY:	CHECKED BY:	REVIEWED BY:
TZY/SDL	SFP/TZY		SDL

PROJECT No.	DATE:	SCALE:
WPSD2203	MARCH 2025	AS SHOWN

CLIENT

White Plains City School District

ADDITION AT WHITE PLAINS HIGH SCHOOL

550 NORTH STREET
WHITE PLAINS, NY 10605

SED 66-22-00-01-0-016-030

CONTRACT

CONTRACT C & G
CIVIL / SITE CONSTRUCTION
GENERAL CONSTRUCTION

STATUS

FINAL BID DOCUMENT

SHEET TITLE

SITE DETAILS

DRAWING No.

C 503.00

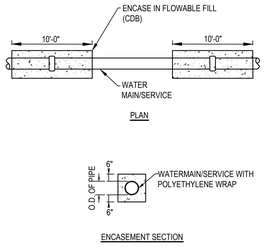

NOTE:

1. PROVIDE CONCRETE ENCASEMENT WHEN MINIMUM SEPARATION REQUIREMENTS CAN NOT BE MET OR AS DIRECTED BY OWNER OR ENGINEER.
2. HORIZONTAL SEPARATION BETWEEN WATER AND STORM OR SANITARY SHALL BE 10-FEET MINIMUM.
3. VERTICAL SEPARATION BETWEEN WATER AND STORM OR SANITARY SHALL BE 18-INCHES MINIMUM.

1 Concrete Encasement

SCALE: NTS

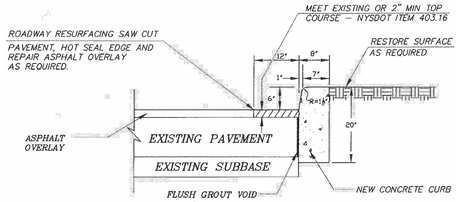

2 WCDPWT Concrete Curb

SCALE: NTS

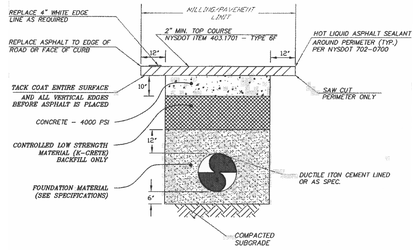

1. TEMPORARY PAVEMENT REPLACEMENT WILL BE ALLOWED ONLY WHEN ASPHALT PLANTS ARE NOT IN OPERATION. WHEN TEMP. PAVEMENT IS USED, CONTRACTOR SHALL BE RESPONSIBLE FOR MAINTENANCE AND UPKEEP OF SAID PATCH UNTIL PERMANANT PATCH IS INSTALLED.

2. UPON THE AVAILABILITY OF ASPHALT, THE CONTRACTOR SHALL EXCAVATE THE "K-KRETE" BACKFILL TO THE ORDERED DEPTH AND REPLACE WITH 4000 PSI CONCRETE AND THE REQUIRED 2" THICK ASPHALT TO THE LIMITS AND SPECIFICATIONS AS SHOWN.

3. STEEL PLATES OF ADEQUATE SIZE SHALL BE PLACED OVER ALL TRENCHES UNTIL THE 4000 PSI CONCRETE PLUG IS DEEMED PASSABLE.

4. STEEL PLATES SHALL BE PINNED AS REQUIRED TO PREVENT MOVEMENT. DURING WINTER ALL STEEL PLATES SHALL BE RECESSED.

3 WCDPWT Concrete Pavement w/ Asphalt Overlay

SCALE: NTS

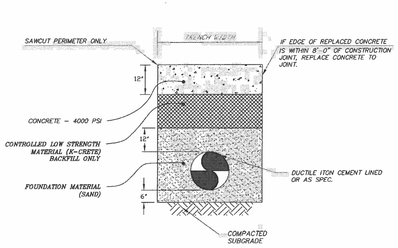

1. TEMPORARY PAVEMENT REPLACEMENT WILL BE ALLOWED ONLY WHEN ASPHALT PLANTS ARE NOT IN OPERATION. WHEN TEMP. PAVEMENT IS USED, CONTRACTOR SHALL BE RESPONSIBLE FOR MAINTENANCE AND UPKEEP OF SAID PATCH UNTIL PERMANANT PATCH IS INSTALLED.

2. UPON THE AVAILABILITY OF ASPHALT, THE CONTRACTOR SHALL EXCAVATE THE "K-KRETE" BACKFILL TO THE ORDERED DEPTH AND REPLACE WITH 4000 PSI CONCRETE AND THE REQUIRED 2" THICK ASPHALT TO THE LIMITS AND SPECIFICATIONS AS SHOWN.

3. STEEL PLATES OF ADEQUATE SIZE SHALL BE PLACED OVER ALL TRENCHES UNTIL THE 4000 PSI CONCRETE PLUG IS DEEMED PASSABLE.

4. STEEL PLATES SHALL BE PINNED AS REQUIRED TO PREVENT MOVEMENT. DURING WINTER ALL STEEL PLATES SHALL BE RECESSED.

4 WCDPWT Concrete Pavement

SCALE: NTS

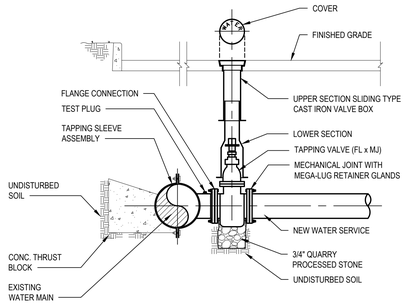

NOTE:

DETAIL PROVIDED IS FOR TYPICAL WET TAP CONNECTION. CONTRACTOR TO VERIFY THAT TAP AND ALL ASSOCIATED WORK AND MATERIALS ARE IN ACCORDANCE WITH THE CITY OF WHITE PLAINS AND WESTCHESTER COUNTY HIGHWAY DEPARTMENT.

5 Typical Wet Tap Connection

SCALE: NTS

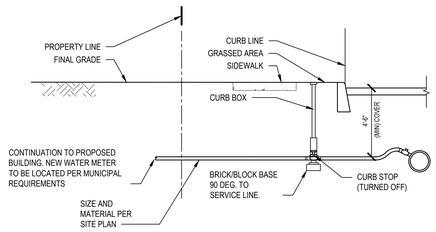

NOTE:

DETAIL PROVIDED IS FOR TYPICAL WATER SERVICE. CONTRACTOR TO VERIFY ALL ASSOCIATED WORK AND MATERIALS ARE IN ACCORDANCE WITH THE CITY OF WHITE PLAINS AND WESTCHESTER COUNTY HIGHWAY DEPARTMENT.

6 Typical Water Service

SCALE: NTS

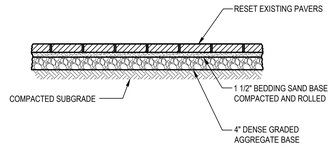

NOTES:

1. COMPACT SUBGRADE TO 92% MAXIMUM DENSITY IN ACCORDANCE WITH ASTM D1557.
2. CONTRACTOR SHALL RESET PAVERS AND PROVIDE SMOOTH TRANSITIONS AT EXISTING GRADES.

7 Pavement Restoration

SCALE: NTS

H2M architects + engineers

538 Broad Hollow Road, 4th Floor East
Melville, NY 11747
631.756.8000 • www.h2m.com
NY Architecture & Landscape Architecture: No Certificate Required
NY Engineering Certificate of Authorization No. 0018438

CONSULTANTS:

MARK	DATE	DESCRIPTION

STATE OF NEW YORK · MATTHEW RONALD MOHLIN · 071569 · LICENSED PROFESSIONAL ENGINEER

MATTHEW R. MOHLIN, P.E.
NY PROFESSIONAL ENGINEER Lic. No. 071569

30/09/2026 EXP. DATE

"IN ACCORDANCE WITH ARTICLE 145, SECTION 7209 OF THE NYS EDUCATION LAW, ALTERATION OF THIS DOCUMENT EXCEPT BY LICENSE PROFESSIONAL IS ILLEGAL"

DESIGNED BY:	DRAWN BY:	CHECKED BY:	REVIEWED BY:
SFP	SFP/KMG		MRM

PROJECT No.:	DATE:	SCALE:
WPSD2203	MARCH 2025	AS SHOWN

CLIENT

White Plains City School District

ADDITION AT WHITE PLAINS HIGH SCHOOL

550 NORTH STREET
WHITE PLAINS, NY 10605

SED 66-22-00-01-0-016-030

CONTRACT

CONTRACT C
CIVIL / SITE CONSTRUCTION

STATUS

FINAL BID DOCUMENT

SHEET TITLE

SITE DETAILS

DRAWING No.

C 504.00

C:\Users\spotmingapplet\oculiamy\AcPublish_19\0411_C504 SITE DETAILS.dwg Last Modified: Feb 21, 2025- 3:22pm Protector: Feb 21, 2025- 3:22pm By spotmin

SPECIAL INSPECTION NOTES:

SPECIAL INSPECTION SHALL MEET THE REQUIREMENTS OF THE NEW YORK STATE BUILDING CODE SECTION 1704. SPECIAL INSPECTOR(S) SHALL BE RETAINED BY OWNER TO PERFORM THE REQUIRED SPECIAL INSPECTIONS. THE NAMES OF PERSONS OR FIRMS WHO ARE TO PERFORM THE SPECIAL INSPECTIONS SHALL BE FORWARDED TO THE BUILDING OFFICIAL FOR APPROVAL. THE SPECIAL INSPECTOR(S) SHALL COMPLETE AND SUBMIT ALL FORMS REQUIRED.

1. THE SPECIAL INSPECTOR(S) SHALL:
   A. OBSERVE THE WORK ASSIGNED FOR CONFORMANCE TO THE APPROVED DRAWINGS AND SPECIFICATIONS.
   B. FURNISH INSPECTION REPORTS TO ENGINEER OF RECORD AND BUILDING DEPARTMENT. DISCREPANCIES SHALL BE BROUGHT TO THE IMMEDIATE ATTENTION OF THE CONTRACTOR FOR CORRECTION, THEN, IF NOT CORRECTED TO THE ENGINEER AND THE BUILDING DEPARTMENT.
   C. SUBMIT TO THE ENGINEER OF RECORD AND THE BUILDING DEPARTMENT A SIGNED FINAL REPORT STATING THAT THE WORK WAS IN CONFORMANCE WITH THE APPROVED DRAWINGS AND SPECIFICATIONS AND THE APPLICABLE WORKMANSHIP PROVISIONS OF THE NYS BC.
2. SPECIAL INSPECTION NOTES:
   A. WHERE FABRICATION OF STRUCTURAL LOAD-BEARING MEMBERS AND ASSEMBLIES IS BEING PERFORMED ON THE PREMISES OF A FABRICATOR'S SHOP, CONTINUOUS SPECIAL INSPECTION IS REQUIRED DURING THE PERFORMANCE OF THE WORK EXCEPT AS ALLOWED IN IBC SECTION 1704.2.2 AND UNLESS SPECIFICALLY NOTED BELOW.
   B. IT IS THE RESPONSIBILITY OF THE CONTRACTOR TO PROVIDE THE SPECIAL INSPECTOR(S) WITH ADVANCE NOTICE, NO LESS THAN 72 HOURS, OF THE INITIATION OF ANY WORK REQUIRED TO HAVE SPECIAL INSPECTIONS. ALL WORK PERFORMED WITHOUT REQUIRED SPECIAL INSPECTION WILL BE SUBJECT TO REMOVAL.
3. TYPES OF WORK REQUIRING SPECIAL INSPECTION ARE:
   A. STRUCTURAL STEEL ELEMENTS OF BUILDINGS AND STRUCTURES AS REQUIRED BY IBC SECTION 1704.3 AND TABLE 1704.3, EXCEPT AS ALLOWED IN IBC SECTION 1704.3:
      1. STRUCTURAL STEEL WELDING IN COMPLIANCE WITH AWS D1.1, IBC SECTION 1704.3.1, AND TABLE 1704.3:
         a. CONTINUOUS INSPECTION DURING WELDING OF COMPLETE AND PARTIAL PENETRATION GROOVE WELDS, MULTI-PASS FILET WELDS, AND SINGLE PASS FILET WELDS GREATER THAN 5/16".
         b. PERIODIC INSPECTION OF SINGLE PASS FILET WELDS LESS THAN OR EQUAL TO 5/16" AND FLOOR DECK WELDS.
      2. REINFORCING STEEL WELDING IN COMPLIANCE WITH AWS D1.1, IBC SECTION 1704.3.1, AND TABLE 1704.3:
         a. PERIODIC VERIFICATION OF WELDABILITY OF REINFORCING STEEL OTHER THAN ASTM A 706 AND PERIODIC INSPECTION OF ALL OTHER REINFORCING STEEL.
         b. DURING WELDING OF REINFORCING STEEL RESISTING FLEXURAL AND AXIAL FORCES IN INTERMEDIATE AND SPECIAL MOMENT RESISTING FRAMES, BOUNDARY ELEMENTS OF SPECIAL REINFORCED CONCRETE SHEAR WALLS, AND SHEAR REINFORCEMENT.
      3. PERIODIC INSPECTION OF STRUCTURAL STEEL FRAME IN COMPLIANCE WITH DETAILS INDICATED ON APPROVED CONSTRUCTION DOCUMENTS INCLUDING BUT NOT LIMITED TO BRACING, STIFFENING, MEMBER LOCATIONS, AND PROPER APPLICATION OF JOINT DETAILS AT EACH CONNECTION IN COMPLIANCE WITH IBC SECTION 1704.3.2 AND TABLE 1704.3.
      4. INSTALLATION OF HIGH-STRENGTH BOLTING IN COMPLIANCE WITH AISC SPECIFICATIONS, IBC SECTION 1704.3.3, AND TABLE 1704.3:
         a. CONTINUOUS INSPECTION DURING INSTALLATION OF SLIP CRITICAL CONNECTION.
         b. PERIODIC INSPECTION OF BEARING TYPE CONNECTIONS AND MATERIAL VERIFICATION OF HIGH-STRENGTH BOLTS, NUTS, AND WASHERS.
   B. CONCRETE CONSTRUCTION AS REQUIRED BY NYS BC SECTION 1705.3 AND TABLE 1705.3, EXCEPT AS ALLOWED IN IBC SECTION 1704.4:
      1. PERIODIC INSPECTION OF REINFORCING STEEL MATERIAL AND PLACEMENT.
      2. CONTINUOUS INSPECTION DURING SETTING OF BOLTS INSTALLED IN CONCRETE PRIOR TO AND DURING PLACEMENT OF CONCRETE.
      3. PERIODIC INSPECTION FOR VERIFICATION OF PROPER USE OF REQUIRED MIX DESIGN, MAINTENANCE OF SPECIFIED CURING TEMPERATURE AND TECHNIQUES.
      4. PERIODIC INSPECTION DURING ERECTION OF PRECAST CONCRETE MEMBERS.
      5. PERIODIC INSPECTION OF IN-SITU CONCRETE STRENGTH PRIOR TO REMOVAL OF FORMS FROM BEAM AND SLABS.
      6. CONTINUOUS INSPECTION DURING PREPARATION OF REQUIRED STRENGTH TEST SPECIMENS AND PLACEMENT OF CONCRETE FOR PROPER APPLICATION OF TECHNIQUES.
   C. MASONRY CONSTRUCTION AS REQUIRED BY NYS SECTION 1705.4, LEVEL B & A SPECIAL INSPECTION, EXCEPT AS ALLOWED IN IBC SECTION 1705.4:
      1. AS MASONRY CONSTRUCTION BEGINS, PERIODIC INSPECTION OF PROPORTIONS OF SITE PREPARED MORTAR, CONSTRUCTION OF MORTAR JOINTS, AND LOCATION AND PLACEMENT OF REINFORCEMENT AND CONNECTORS.
      2. CONTINUOUS INSPECTION DURING THE LAYING OF MASONRY UNITS AND PLACEMENT OF REINFORCING STEEL AS FOLLOWS:
         a. SIZE AND LOCATION OF STRUCTURAL ELEMENTS.
         b. TYPE, SIZE LOCATION OF ANCHORS, AND DETAILS OF ANCHORAGE OF MASONRY TO STRUCTURAL MEMBERS, FRAMES, AND OTHER CONSTRUCTION.
         c. SPECIFIED SIZE, GRADE, AND TYPE OF REINFORCEMENT.
         d. PROTECTION OF MASONRY DURING COLD OR HOT WEATHER.
      3. CONTINUOUS INSPECTION OF WELDING OF REINFORCING BARS.
      4. PRIOR TO GROUTING, PERIODIC INSPECTION TO ENSURE CLEAN GROUT SPACE, PLACEMENT OF REINFORCEMENT AND CONNECTORS, PROPORTIONS OF SITE-PREPARED GROUT, AND CONSTRUCTION OF MORTAR JOINTS.
      5. DURING GROUT PLACEMENT TO ENSURE COMPLIANCE WITH CODE PROVISIONS AND CONSTRUCTION DOCUMENTS.
      6. DURING PREPARATION OF GROUT SPECIMENS, MORTAR SPECIMENS, AND/OR PRISMS.
      7. PERIODIC INSPECTION TO VERIFY COMPLIANCE WITH REQUIRED INSPECTION PROVISIONS OF THE CONSTRUCTION DOCUMENTS AND APPROVED SUBMITTALS
   D. SPECIAL INSPECTION FOR EXISTING SITE SOIL CONDITIONS, DURING SITE PREPARATION AND FILL PLACEMENT, TO ENSURE LOAD-BEARING REQUIREMENTS IN COMPLIANCE WITH NYS SECTION 1705.6.
   E. SPECIAL CASES AS DEEMED NECESSARY BY THE BUILDING OFFICIAL IN COMPLIANCE WITH IBC SECTION 1704.13.

GENERAL NOTES:

1. SPECIFICATIONS ARE PART OF THE CONSTRUCTION DOCUMENTS AND MUST BE USED IN CONJUNCTION WITH THE DRAWINGS.
2. THE CONTRACTOR SHALL VERIFY ALL DIMENSIONS BY MEASUREMENTS AT THE JOB SITE AND SHALL TAKE ANY AND ALL OTHER MEASUREMENTS NECESSARY TO VERIFY THE DRAWINGS AND TO PERFORM THE WORK PROPERLY. ANY DISCREPANCY BETWEEN THE DRAWINGS AND THE MEASURED DIMENSIONS OF THE EXISTING SHALL BE BROUGHT TO THE ATTENTION OF THE ENGINEER. NO WORK SHALL PROCEED UNTIL SUCH DISCREPANCIES HAVE BEEN RECTIFIED INCLUDING BUT NOT LIMITED TO FABRICATION OF MATERIALS. SUCH DISCREPANCIES BETWEEN THE DRAWINGS AND THE MEASURED DIMENSIONS SHALL NOT BE THE REASONS FOR ANY EXTRA COST OR DELAY IN THE EXECUTION OF THE WORK AND THE WORK SHALL BE PERFORMED AT NO EXTRA COST TO THE OWNER.
3. ALL CONTRACTORS ARE REQUIRED TO VISIT THE SITE AND FULLY INFORM THEMSELVES AS TO THE EXISTING CONDITIONS AND LIMITATIONS PRIOR TO SUBMITTING THEIR PROPOSAL/BID. FAILURE TO VISIT THE SITE AND NOT FAMILIARIZING THEMSELVES WITH THE CONDITIONS AND LIMITATIONS WILL IN NO WAY RELIEVE THE SUCCESSFUL BIDDER FROM FURNISHING ANY MATERIALS OR PERFORMING ANY WORK THAT MAY BE REQUIRED TO COMPLETE THE WORK IN ACCORDANCE WITH THE DRAWINGS AND SPECIFICATIONS AT NO ADDITIONAL COST TO THE OWNER.
4. THE CONTRACT STRUCTURAL DOCUMENTS REPRESENT THE FINISHED STRUCTURE. THE CONTRACTOR ALONE IS RESPONSIBLE FOR THE MEANS AND METHODS OF CONSTRUCTION AND SAFETY OF STRUCTURE AND WORKERS DURING THE ENTIRE CONSTRUCTION PERIOD, WHICH SHALL INCLUDE BUT NOT BE LIMITED TO DESIGN AND INSTALLATION OF BRACING, SHORING FOR CONSTRUCTION EQUIPMENT, SHORING FOR THE BUILDING, FORMS AND SCAFFOLDING, SHORING OF RETAINING WALLS AND OTHER TEMPORARY SUPPORTS AS REQUIRED. ANY DAMAGE TO THE STRUCTURE, IF IT OCCURRED, SHALL BE RECTIFIED TO THE ENTIRE SATISFACTION OF THE OWNER AT NO ADDITIONAL COST TO THE OWNER. THE CONTRACTOR SHALL SCHEDULE THE WORK IN CONSULTATION WITH THE OWNER AND IN SUCH A WAY AS TO MINIMIZE THE CONFLICT OF THE OPERATION OF THE BUILDING. COMPLY WITH APPLICABLE REQUIREMENTS OF OSHA AND OTHER GOVERNING BODIES HAVING JURISDICTION AT THE SITE.
5. IN CASE OF ANY DAMAGE TO THE CONSTRUCTION, THE CONTRACTOR SHALL REPAIR THE SAME TO THE SATISFACTION OF THE OWNER AT NO ADDITIONAL COST TO THE OWNER.
6. THE CONTRACTOR SHALL INFORM THE ENGINEER OF ANY DEMOLITION, ALTERATIONS REQUIRED OR INTERFERENCES NOT SHOWN ON THE DEMOLITION DRAWINGS FOR RESOLUTION. THE CONTRACTOR SHALL ALLOW 7 WORKING DAYS FOR RESOLUTION OF THE CONDITION UNLESS ADDITIONAL TIME IS STATED TO BE REQUIRED BY THE ENGINEER.
7. TYPICAL DETAILS ON THE DRAWINGS APPLY TO SITUATIONS OCCURRING ON THE PROJECT THAT ARE THE SAME OR SIMILAR TO THOSE SPECIFICALLY DETAILED. SUCH DETAILS APPLY WHETHER OR NOT DETAILS ARE REFERENCED AT EACH LOCATION. NOTIFY ENGINEER OF CONFLICTS REGARDING APPLICABILITY OF TYPICAL DETAILS.
8. DO NOT LOAD THE FINISHED SLAB ON GRADE OR ELEVATED SLABS WITH ERECTION EQUIPMENT. DO NOT STACK CONSTRUCTION MATERIALS ON DECKS/SLABS. DO NOT CAUSE IMPACT LOADS TO DECK/SLAB DURING CONSTRUCTION.
9. VERIFY THE LOCATION OF CHASES, INSERTS, OPENINGS, SLEEVES, FINISHES, DEPRESSIONS, PADS, AND WALL OPENINGS.
10. PRINCIPAL OPENINGS THROUGH THE FRAMING AND SLABS ARE SHOWN ON DRAWINGS. COORDINATE WITH THE ARCHITECTURAL, MECHANICAL, ELECTRICAL, PLUMBING, AND FIRE PROTECTION DRAWINGS FOR ALL THE REQUIRED OPENINGS AND PROVIDE FOR REQUIRED OPENINGS WHETHER SHOWN ON THE STRUCTURAL DRAWING OR NOT. VERIFY SIZE AND LOCATION OF OPENINGS WITH THE MECHANICAL AND PLUMBING CONTRACTOR. DEVIATIONS FROM THE OPENINGS SHOWN ON THE STRUCTURAL DRAWINGS MUST BE APPROVED PRIOR TO CONSTRUCTION/FABRICATION OF THE REQUIRED OPENINGS.
11. LOADING FOR MECHANICAL EQUIPMENT IS BASED ON THE UNITS SHOWN ON THE MECHANICAL DRAWINGS. ANY CHANGES IN TYPE, SIZE OR NUMBER OF PIECES OF EQUIPMENT SHALL BE REPORTED TO THE ARCHITECT FOR VERIFICATION OF THE ADEQUACY OF SUPPORTING MEMBERS PRIOR TO THE PLACEMENT OF SUCH EQUIPMENT.
12. SEE ARCHITECTURAL DRAWINGS FOR ELEVATIONS NOT SHOWN AND FOR EXACT LOCATION OF ALL SLAB DEPRESSIONS AND HOUSEKEEPING PADS. THE CONTRACTOR SHALL COMPARE THE STRUCTURAL SECTIONS WITH ARCHITECTURAL SECTIONS AND REPORT ANY DISCREPANCY TO THE ARCHITECT PRIOR TO FABRICATING OR INSTALLING STRUCTURAL MEMBERS.

EXCAVATION NOTES:

1. PROTECT ABOVE AND BELOW GRADE UTILITIES WHICH ARE TO REMAIN.
2. PROTECT PLANT LIFE, LAWNS AND OTHER FEATURES REMAINING AS A PORTION OF FINAL LANDSCAPING.
3. PROTECT BENCH MARKS, EXISTING STRUCTURES, FENCES, SIDEWALKS, PAVING AND CURBS FROM EXCAVATION EQUIPMENT AND VEHICULAR TRAFFIC.
4. GRADE TOP PERIMETER OF EXCAVATION TO PREVENT SURFACE WATER FROM DRAINING INTO EXCAVATION.
5. HAND TRIM EXCAVATION. REMOVE LOOSE MATTER.
6. REMOVE LUMPED SUB-SOIL, BOULDERS AND ROCK.
7. NOTIFY ENGINEER OF UNEXPECTED SUBSURFACE CONDITIONS AND DISCONTINUE AFFECTED WORK AREA UNTIL NOTIFIED TO RESUME WORK.
8. CORRECT UNAUTHORIZED EXCAVATION AT NO EXTRA COST TO OWNER IN ACCORDANCE WITH BACKFILLING NOTES.
9. STOCKPILE EXCAVATED MATERIAL IN AREA DESIGNATED ON SITE AND REMOVE EXCESS MATERIAL NOT BEING REUSED FROM SITE.
10. PROTECT EXCAVATIONS BY METHODS REQUIRED TO PREVENT CAVE-IN OR LOOSE SOIL FROM FALLING INTO EXCAVATION.
11. CONTRACTOR SHALL VERIFY LOCATION OF EXISTING STRUCTURES AND UTILITIES PRIOR TO EXCAVATION. CONTRACTOR SHALL ENSURE ALL SURROUNDING STRUCTURES ARE PROTECTED FROM THE EFFECTS OF ALL EXCAVATION.

DESIGN CODES/REFERENCE FOR DESIGN AND DELEGATED DESIGN

1. AISI 2017 EDITION OF THE COLD-FORMED STEEL DESIGN MANUAL.
2. AWS D1.1-2020 - STRUCTURAL WELDING CODE - STEEL
3. ACI 318 BUILDING CODE REQUIREMENTS FOR STRUCTURAL CONCRETE, 2019 EDITION.
4. STRUCTURAL WELDED WIRE REINFORCEMENT MANUAL OF STANDARD PRACTICE, WIRE REINFORCEMENT INSTITUTE.
5. ACI 530 BUILDING CODE REQUIREMENTS FOR MASONRY STRUCTURES. 2013 EDITION.
6. SJI RECOMMENDED CODE OF STANDARD PRACTICE FOR STEEL JOISTS AND JOIST GIRDERS, 2015 EDITION
7. LIVE LOAD REDUCTION ON SUPPORTING ELEMENTS IN ACCORDANCE WITH IBC 2020.
8. ADDITIONAL DESIGN LOADS INDICATED ON STRUCTURAL DRAWINGS SHALL BE IDENTIFIED AS FOLLOWS:

   DL = DEAD LOAD
   LL = LIVE LOAD
   WL = WIND LOAD
   EQ = SEISMIC LOAD
   Lr = ROOF LIVE LOAD
   SL = SNOW LOAD

BACKFILLING NOTES:

1. CONTROLLED FILL: FREE DRAINING, NATURALLY OR ARTIFICIALLY GRADED MIXTURE OF SAND OR CRUSHED STONE OR GRAVEL. CONTROLLED FILL SHALL CONFORM TO NYSDOT SUBBASE COARSE TYPE 2 OR 4, OR NO. 2 CRUSHED STONE AS INDICATED IN THE MATERIAL SPECIFICATIONS BELOW. SHALL BE FREE OF ORGANIC AND/OR FROZEN MATERIAL, WITH LESS THAN 10% FINES PASSING THE NO. 200 SIEVE.

SIEVE SIZE:	PERCENT PASSING
2 INCH	100
1/4 INCH	30-65
NO. 40	5-40
NO. 200	0-10

2. VERIFY EXISTING CONDITIONS AND SUBSTRATE.
3. VERIFY FILL MATERIALS TO BE REUSED ARE ACCEPTABLE.
4. COMPACT SUBGRADE TO 95 PERCENT MAXIMUM DRY DENSITY IN ACCORDANCE WITH ANSI/ASTMD1557.
5. CUT OUT SOFT AREAS OF SUBGRADE NOT CAPABLE OF IN-SITU COMPACTION. BACKFILL WITH TYPE C FILL AND COMPACT TO DENSITY EQUAL TO OR GREATER THAN REQUIREMENTS FOR SUBSEQUENT BACKFILL MATERIAL.
6. BACKFILL AREAS TO CONTOURS AND ELEVATIONS WITH UNFROZEN MATERIALS.
7. SYSTEMATICALLY BACKFILL TO ALLOW MAXIMUM TIME FOR NATURAL SETTLEMENT. DO NOT BACKFILL OVER POROUS, WET, FROZEN OR SPONGY MATERIALS.
8. PLACE AND COMPACT MATERIALS IN CONTINUOUS LAYERS NOT EXCEEDING 6 INCHES COMPACTED DENSITY.
9. ALL BACKFILL MATERIALS SHALL BE COMPACTED TO 95 PERCENT MAXIMUM DRY DENSITY IN ACCORDANCE WITH ANSI/ASTM D1557. MAINTAIN OPTIMUM MOISTURE CONTENT TO ATTAIN REQUIRED DENSITY.
10. AT COMPLETION OF WALL CONSTRUCTION, BACKFILL SHALL BE PLACED LEVEL WITH FINAL TOP OF WALL ELEVATION. IF FINAL GRADING, PAVING, LANDSCAPING AND/OR STORM DRAINAGE INSTALLATION ADJACENT TO THE WALL IS NOT PLACED IMMEDIATELY AFTER COMPLETION, TEMPORARY GRADING AND DRAINAGE SHALL BE PROVIDED TO ENSURE WATER RUNOFF IS NOT DIRECTED AT THE WALL OR ALLOWED TO COLLECT OR POND BEHIND THE WALL UNTIL FINAL CONSTRUCTION ADJACENT TO THE WALL IS COMPLETED.

STRUCTURAL STEEL NOTES:

1. DETAIL AND ERECT STRUCTURAL STEEL ELEMENTS IN ACCORDANCE WITH THE FOLLOWING:
   A. AISC SPECIFICATIONS FOR THE DESIGN, FABRICATION, AND ERECTION OF STRUCTURAL STEEL FOR BUILDINGS.
   B. AISC MANUAL OF STEEL CONSTRUCTION.
   C. AISC CODE OF STANDARD PRACTICE FOR STEEL BUILDINGS AND BRIDGES.
   D. AWS STRUCTURAL WELDING CODE, D1.1.
2. PROVIDE STRUCTURAL STEEL OF THE FOLLOWING ASTM DESIGNATIONS UNLESS NOTED OTHERWISE:
   A. STRUCTURAL STEEL WIDE FLANGE SHAPES: ASTM A 992
   B. EDGE ANGLES, BENT PLATES, HANGERS AND BRACES:ASTM A 36
   C. STRUCTURAL PIPE: ASTM A 53, GRADE B, TYPE E OR S
   D. HOLLOW STRUCTURAL SHAPES: ASTM A 500, GRADE C
   E. BASE PLATES AND MISCELLANEOUS STEEL PLATES: ASTM A 36
   F. ANCHOR RODS: ASTM F 1554, GRADE 36 U.N.O.
3. CONNECTION MATERIALS:
   A. BEAM-COLUMN STIFFENER PLATES AND DOUBLER PLATES TO MATCH THE GRADE STEEL OF STRUCTURAL ELEMENT:
   B. HIGH STRENGTH BOLTS: ASTM A 325
   C. HARDENED STEEL WASHERS: ASTM F 436
4. WELD MINIMUM SIZE AND STRENGTH:
   A. PROVIDE MINIMUM SIZE OF FILLET WELDS AS SPECIFIED IN TABLE J2.4 OF THE AISC MANUAL.
   B. PROVIDE MINIMUM EFFECTIVE THROAT THICKNESS OF PARTIAL PENETRATION GROOVE WELDS AS SPECIFIED IN TABLE J2.3 OF THE AISC MANUAL
   C. DEVELOP THE FULL TENSILE STRENGTH OF THE MEMBER ELEMENT JOINED, ON ALL SHOP AND FIELD WELDS, UNLESS NOTED OTHERWISE ON THE DRAWINGS.
   D. WHERE CONNECTIONS ARE NOTED ON DRAWINGS AS MOMENT CONNECTIONS, PROVIDE WELDS TO DEVELOP FULL FLEXURAL CAPACITY OF THE LESSER MEMBER.
   E. PROVIDE ELECTRODES FOR FIELD OR SHOP WELDING THAT CONFORM TO ASTM A 233(CLASS 70).
   F. ALL WELDS ARE CONTINUOUS FOR THE FULL LENGTH OF THE CONNECTION UNLESS NOTED OTHERWISE ON DRAWINGS.
5. PROVIDE MINIMUM OF TWO BOLTS PER CONNECTION. PROVIDE MINIMUM BOLT DIAMETER OF 3/4 INCH.
6. PROVIDE BOLTS, NUTS AND WASHERS THAT ARE HOT DIP GALVANIZED ACCORDING TO ASTM A 153, CLASS C WHEN USED TO CONNECT STEEL ELEMENTS THAT ARE HOT DIP GALVANIZED AFTER FABRICATION.
7. SUBMIT CALCULATIONS FOR CONNECTION DESIGNS NOT FULLY DETAILED ON DRAWINGS. DESIGN CONNECTIONS UNDER SUPERVISION OF REGISTERED PROFESSIONAL ENGINEER REGISTERED IN THE STATE WHERE PROJECT IS BEING CONSTRUCTED, EMPLOYED BY THE STEEL FABRICATOR. DESIGN CALCULATIONS TO BE SEALED BY FABRICATOR'S REGISTERED PROFESSIONAL ENGINEER. SHOP DRAWINGS SUBMITTED WITHOUT COMPLETE DESIGN CALCULATIONS WILL NOT BE REVIEWED.
8. PROVIDE SIMPLE SHEAR CONNECTIONS FOR STEEL CONNECTIONS NOT FULLY DETAILED BY UTILIZING HIGH STRENGTH BEARING BOLTS IN SINGLE OR DOUBLE SHEAR. PROVIDE DOUBLE ANGLE BOLTED CONNECTIONS WHERE POSSIBLE. UNLESS LARGER REACTION IS SHOWN ON DRAWINGS, CONNECTION DESIGNER SHALL DESIGN EACH CONNECTION FOR MAXIMUM END REACTION RESULTING FROM THE APPLICATION OF THE ALLOWABLE UNIFORM LOADS LISTED IN TABLES OF PART 2 OF THE AISC MANUAL OF STEEL CONSTRUCTION.
   8.1 ADD TO REACTIONS LISTED ABOVE, LOADS OR REACTIONS OF MEMBERS SUPPORTED BY BEAM WITHIN THREE FEET OF BEAM END AND VERTICAL COMPONENTS OF FORCES IN BRACE MEMBERS FRAMING INTO BEAM.
9. STEEL FABRICATION:
   A. FABRICATE AND ASSEMBLE STRUCTURAL MEMBER/ ASSEMBLIES IN SHOP TO GREATEST EXTENT POSSIBLE.
   B. SPLICING OF STRUCTURAL STEEL MEMBERS IS PROHIBITED WITHOUT PRIOR APPROVAL BY THE A/E.
   C. FABRICATOR SHALL BE RESPONSIBLE FOR ALL ERRORS OF DETAILING ON THE SHOP DRAWINGS, ERRORS IN FABRICATION, AND THE CORRECT FITTING OF STRUCTURAL STEEL MEMBERS.
   D. CONFORM TO THE AISC CODE OF STANDARD PRACTICE, FOR ERECTION TOLERANCES. FIELD MODIFICATION TO STRUCTURAL STEEL IS PROHIBITED WITHOUT PRIOR APPROVAL BY THE A/E.
   E. CLEAN STEEL OR RUST, LOOSE MILL SCALE AND OTHER FOREIGN MATERIALS WHERE REQUIRED FOR FABRICATION, FITTING UP, OR WELDING.
   F. DO NOT CUT STRUCTURAL STEEL MEMBERS FOR THE WORK OF OTHER TRADES WITHOUT PRIOR REVIEW AND APPROVAL OF THE A/E.
   G. STEEL INTERIOR WHERE EXPOSED TO BE PRIMED.
10. HOT DIP GALVANIZE AFTER FABRICATION ALL STRUCTURAL STEEL AND THEIR CONNECTIONS PERMANENTLY EXPOSED TO THE OUTSIDE. ITEMS INCLUDED BUT NOT LIMITED TO:
   A. SHELF ANGLES.
   B. EMBEDDED PLATES IN CONCRETE
   C. LINTELS
   D. COLUMNS

CONCRETE REINFORCING NOTES:

1. PROVIDE NEW BILLET STEEL REINFORCEMENT BARS IN ACCORDANCE WITH ASTM A 615 GRADE 60.
2. COORDINATE PLACEMENT OF CAST-IN-PLACE EMBEDS AND ANCHORS RODS. SET ANCHOR RODS WITH A TEMPLATE. SECURELY ATTACH EMBEDDED ITEMS TO FORMWORK OR REINFORCING.
3. PROVIDE CLASS "B" REINFORCEMENT SPLICES FOR CONTINUOUS REINFORCEMENT. PROVIDE STANDARD 90-DEGREE HOOKS IN ACCORDANCE WITH ACI 318, UNLESS NOTED OTHERWISE.
4. MAINTAIN THE FOLLOWING CONCRETE COVERAGE FOR REINFORCING STEEL UNLESS NOTED OTHERWISE:
   A. CONCRETE CAST AGAINST EARTH: 3 INCHES
   B. CONCRETE EXPOSED TO WEATHER
      No. 6 AND LARGER: 2 INCHES
      No. 5 AND SMALLER: 1 1/2 INCHES
   C. CONCRETE NOT EXPOSED TO WEATHER OR CONCRETE NOT IN CONTACT WITH THE GROUND:
      SLAB AND WALLS
      No. 11 AND SMALLER: 3/4 INCHES
5. DO NOT WELD OR BEND REINFORCEMENT IN THE FIELD UNLESS SPECIFICALLY SHOWN OR APPROVED BY STRUCTURAL ENGINEER.
6. WHEN SPECIFICALLY APPROVED, PROVIDE WELDED REINFORCEMENT IN ACCORDANCE WITH ASTM A 706 GRADE 60. USE LOW HYDROGEN ELECTRODES FOR WELDING OF REINFORCEMENT IN CONFORMANCE WITH "RECOMMENDED PRACTICES FOR WELDING REINFORCING STEEL," AMERICAN WELDING SOCIETY, AWS D12.1. PROVIDE ASTM GRADE 40 REINFORCING BARS WHERE DETAILED BARS ARE TO BE WELDED TO A STEEL SECTION.
7. WHERE REQUIRED, PROVIDE DOWELS TO MATCH SIZE AND SPACING OF MAIN REINFORCING.
8. PROVIDE CONTINUOUS HORIZONTAL WALL REINFORCEMENT WITH 90-DEGREE BENDS AND EXTENSIONS AT CORNERS AND INTERSECTIONS AS SHOWN ON TYPICAL BAR PLACING DETAILS.

METAL DECK:

1. PROVIDE DESIGN, FABRICATIONS, AND ERECTION OF METAL DECK CONFORMING TO THE STEEL DECK "CODE OF RECOMMENDED STANDARD PRACTICE AND BASIC DESIGN SPECIFICATIONS"
2. FORM ROOF AND FLOOR DECK FROM STEEL SHEETS CONFORMING TO ASTM A611 GRADE C AND D OR A653 OR HIGHER SPECIFICATIONS WITH A MINIMUM YIELD STRENGTH OF 33 KSI.
3. ATTACH SHEETS OF STEEL SUPPORT MEMBERS AS INDICATED AND IN ACCORDANCE WITH THE MANUFACTURER'S INSTRUCTIONS FOR INSTALLATION. WHEN DECK IS SCHEDULED TO BE EXPOSED, DE-SLAG, CLEAN AND TOUCHED UP WELDS WITH ZINC-RICH PRIMER.
4. LAP ROOF AND FLOOR DECK ENDS MINIMUM OF 2 INCHES. WHEN FASTENING DECK TO SUPPORT MEMBERS PROVIDE WELDING MATERIALS INSTALLATION PROCEDURES TO PREVENT BURNING OF HOLES IN DECK.
5. PROVIDE SIX INCH CLOSURE STRIP WHERE CHANGES IN DECK DIRECTION OCCUR. CLOSURE TO BE SAME GAUGE AS DECK.
6. AT ENDS OF DECKS OR WHERE CHANGES OF DECK DIRECTION OCCUR, FASTEN TO SUPPORTS AT EACH FLUTE. PROVIDE ADEQUATE CLOSURES AND FASTENERS TO SIDES AT EIGHTEEN INCHES ON CENTER.
7. WHERE PARTIAL PANELS MAY BE REQUIRED TO COMPLETE DECK INSTALLATION AT PERIMETER OF STRUCTURE, PROVIDE WELDS IN EACH FLUTE TO STRUCTURAL MEMBERS. INSTALL DECK IN THREE CONTINUOUS SPAN LENGTHS.
8. AT PERIMETER OF DECK, SECURE DECK TO STRUCTURAL MEMBERS WITH SAME ATTACHMENT AND SPACING SUPPORT ATTACHMENT AS INDICATED ON PLANS.
9. DECK CLOSURE STRIPS SHALL BE INSTALLED ON STRUCTURAL STEEL PRIOR TO DECK LAYING.

CONCRETE NOTES:

1. PROVIDE BATCH MIXING, TRANSPORTATION, PLACING AND CURING OF CONCRETE IN ACCORDANCE WITH RECOMMENDATIONS OF ACI 301 AND ACI 318. USE TYPE I PORTLAND CEMENT UNLESS NOTED OTHERWISE. PROVIDE ADMIXTURES AND SPECIAL REQUIREMENTS AS SPECIFIED.
   A. ALL CONCRETE SHALL BE NORMAL WEIGHT (145 PCF) CONCRETE f'c = 4000 PSI AT 28 DAYS.
2. PROVIDE CONCRETE MIXES DESIGNED BY A QUALIFIED TESTING LABORATORY FOR REVIEW AND APPROVAL BY THE STRUCTURAL ENGINEER.
3. PROVIDE CONSTRUCTION AND CONTROL JOINTS AS REQUIRED BY A.C.I CODE AND AS INDICATED ON DRAWINGS. HORIZONTAL CONSTRUCTION JOINTS ARE NOT ALLOWED UNLESS SPECIFICALLY NOTED OR APPROVED BY STRUCTURAL ENGINEER. SUBMIT PLAN TO ENGINEER INDICATING PROPOSED CONTROL AND EXPANSION JOINT LOCATIONS IN CONCRETE SLABS FOR REVIEW AND APPROVAL PRIOR TO INSTALLATION.
4. CHAMFER EXPOSED CONCRETE EDGES 3/4 INCH UNLESS NOTED OTHERWISE.
5. WIRE BRUSH AND CLEAN CONSTRUCTION JOINTS PRIOR TO POURING NEW CONCRETE.
6. PROVIDE ADEQUATE STRUCTURAL FRAMING AS APPROVED BY STRUCTURAL ENGINEER FOR MECHANICAL OPENING THROUGH THE SLABS, WALLS AND FLOOR DECK.

SPECIAL INSPECTION REQUIREMENTS

CONTINUOUS	PERIODIC	REQ'D	INSPECTION AND TESTING	NYS 2020 REFERENCE	REFERENCE STANDARD
	X	X	HIGH STRENGTH BOLTING	1705.2	AISC 360
	X	X	WELDING OF STRUCTURAL STEEL	1705.2	AISC 360, AWS D1.1
	X	X	STRUCTURAL STEEL MEMBERS	1705.2	AISC 360
	X	X	COLD-FORMED STEEL DECKING	1705.2	SDI
	X	X	OPEN-WEB STEEL JOISTS AND JOIST-GIRDERS	1705.2	SJI
	X		COLD FORMED STEEL TRUSSES	1705.2	-
	X	X	INSPECTION OF STEEL FRAME JOINT DETAILS	1704.3, 1704.3.2	AISC 360
X	X	X	CONCRETE CONSTRUCTION	1705.3; TABLE 1705.3	ACI 318
			MASONRY CONSTRUCTION: TYPE A	1705.4	TMS 402/ACI 530/ASCE 5 & TMS 602/ACI 530.1/ASCE
	X	X	MASONRY CONSTRUCTION: TYPE B	1705.4	TMS 402/ACI 530/ASCE 5 & TMS 602/ACI 530.1/ASCE
X	X		MASONRY CONSTRUCTION: TYPE C	1705.4	TMS 402/ACI 530/ASCE 5 & TMS 602/ACI 530.1/ASCE
			WOOD CONSTRUCTED SITE-BUILT ASSEMBLIES	1705.5; 1704.2.5	-
			METAL -PLATE-CONNECTED WOOD TRUSSES	1705.5	-
X	X	X	SOIL TESTING AND INSPECTION	1705.6; TABLE 1705.6	-
			DRIVEN DEEP FOUNDATIONS	1705.7; TABLE 1705.7	-
			CAST-IN-PLACE DEEP FOUNDATIONS	1705.3, 1705.8; TABLE 1705.8	-
			HELICAL PILE FOUNDATIONS	1705.9	-

NOTE:
1. THE ABOVE TABLE IS INTENDED TO SUMMARIZE THE REQUIRED STRUCTURAL SPECIAL INSPECTIONS AND ALERT THE OWNER AND CONTRACTOR OF THEIR INCLUSION IN THE SCOPE.
2. THE OWNER OR OWNER'S REPRESENTATIVE IS RESPONSIBLE FOR ENGAGING THE SERVICES OF A QUALIFIED 3rd PARTY SPECIAL INSECTOR.
3. THE CONTRACTOR IS RESPONSIBLE FOR NOTIFYING THE SPECIAL INSPECTOR OF INTENDED WORK AND COORDINATING ACCESS FOR SPECIAL INSPECTIONS TO OCCUR BOTH ONSITE AND IN THE SHOP, AS REQUIRED.

COLD FORMED STEEL:

1. COLD-FORMED STEEL FRAMING SHALL BE DESIGNED, FABRICATED, AND ERECTED IN ACCORDANCE WITH THE AMERICAN IRON AND STEEL INSTITUTE (AISI) "SPECIFICATIONS FOR THE DESIGN OF COLD-FORMED STEEL STRUCTURAL MEMBERS", LATEST EDITION.
2. PROVIDE ALL STUDS AND/OR JOISTS AND ACCESSORIES OF THE TYPE, SIZE, GAUGE, AND SPACING SHOWN ON THE DRAWINGS.
3. FORM ALL FRAMING MEMBERS AND ACCESSORIES FROM CORROSION RESISTANT STEEL, CORRESPONDING TO REQUIREMENTS OF ASTM A653 AND THE FOLLOWING STRENGTH REQUIREMENTS:
   A. MATERIAL WITH A THICKNESS OF 18 GA (43 MIL) OR THINNER SHALL HAVE MINIMUM YIELD STRENGTH OF 33 KSI.
   B. MATERIAL WITH A THICKNESS OF 16 GA (54 MIL) OR THICKER SHALL HAVE A MINIMUM YIELD STRENGTH OF 50 KSI.
4. PLACE ALL COLD-FORMED STEEL STUD WALL BRIDGING HORIZONTALLY WITH A MAXIMUM VERTICAL SPACING OF FOUR FEET, UNLESS NOTED OTHERWISE. AS AN OPTION, CONTINUOUS COLD-FORMED CHANNELS MAY BE POSITIONED THROUGH THE STUD PUNCH OUTS AS BRIDGING PROVIDED THE BRIDGING CHANNEL IS PROPERLY FASTENED TO EACH STUD. STUDS WITH A MEMBER DEPTH OF EIGHT (8) INCHES OR GREATER SHALL USE CONTINUOUS FLAT STRAP BRIDGING ON EACH SIDE OF THE WALL.
5. BRIDGING SHALL BE SECURELY ANCHORED TO A POST, STRONGBACK, BRACE, OR OTHER SUPPORTING MEMBER PER WALL DESIGN, OR NOT FARTHER THAN EVERY 24 FEET ON CENTER.
6. INSTALL AXIALLY LOADED STUDS IN A MANNER WHICH WILL ASSURE THAT THEIR ENDS ARE POSITIONED AGAINST THE INSIDE OF THE TRACK WEB PRIOR TO FASTENING.
7. FASTEN COMPONENTS WITH SELF-DRILLING SCREWS OR WELDING. PROVIDE SCREWS OF SUFFICIENT SIZE TO ENSURE THE STRENGTH OF THE CONNECTION. WIRE TYING OF COMPONENTS IS NOT PERMITTED. TOUCH UP ALL WELDS WITH A ZINC-RICH PAINT.
8. WELDING OF COLD-FORMED STUDS MAY BE PERFORMED USING A MINIMUM ONE-EIGHTH INCH AWS TYPE 6013 WELDING ROD.
9. SECURELY ANCHOR WALL TRACKS TO THE SUPPORTING STRUCTURE. PROVIDE COMPLETE, UNIFORM, AND LEVEL BEARING SUPPORT FOR THE BOTTOM TRACK. PROVIDE METAL OR PLASTIC SHIMS BETWEEN BOTTOM TRACK AND SLAB AT EACH WALL STUD AS NEEDED TO ENSURE FULL BEARING.
10. SECURELY ANCHOR ABUTTING LENGTHS OF WALL TRACK TO A COMMON STRUCTURAL ELEMENT, BUTT-WELDED OR SPLICED.
11. PLUMB, ALIGN, AND SECURELY ATTACH STUDS TO THE FLANGES OF BOTH UPPER AND LOWER WALL TRACKS. SPLICES IN WALL STUDS ARE NOT PERMITTED.
12. ALIGN PUNCHED OPENINGS OF WALL STUDS.
13. PROVIDE HEADERS AND SUPPORTING STUDS FOR FRAMING OF WALL OPENINGS.
14. STUD MATERIAL USED IN HEADER CONSTRUCTION SHALL BE FREE OF PUNCHED OPENINGS.
15. WHERE COLD-FORMED STEEL DESIGN HAS BEEN DELEGATED, OWNER/CONTRACTOR SHALL HIRE A SPECIALTY ENGINEER WITH EXPERIENCE IN COLD-FORMED STEEL DESIGN TO DEVELOP THE DESIGN OF THE DELEGATED COLD-FORMED STEEL MEMBERS. SPECIALTY ENGINEER RESPONSIBLE FOR COLD-FORMED STEEL DESIGN SHALL BE A LICENSED PROFESSIONAL ENGINEER REGISTERED IN THE STATE OF THE PROPOSED CONSTRUCTION. SPECIALTY ENGINEER SHALL PROVIDE A FULL SET OF COLD-FORMED STEEL ENGINEERING DRAWINGS TO THE ENGINEER OF RECORD FOR REVIEW AND APPROVAL. WHERE DELEGATED COLD-FORMED STEEL DESIGN INCLUDES BEARING WALLS, SHEAR WALLS, BRACED WALL PANELS, OR OTHER VERTICAL ELEMENTS OF THE BUILDING GRAVITY OR LATERAL SYSTEMS, DESIGN CALCULATIONS SHALL ALSO BE SUBMITTED TO THE ENGINEER OF RECORD FOR REVIEW AND APPROVAL. ALL ENGINEERING DRAWINGS AND CALCULATIONS SUBMITTED SHALL BE SIGNED AND SEALED BY THE SPECIALTY ENGINEER RESPONSIBLE FOR THE COLD-FORMED STEEL DESIGN.
16. SHOP DRAWINGS SHALL BE SUBMITTED FOR ALL PANELIZED COLD-FORM STEEL CONSTRUCTION FOR REVIEW AND APPROVAL PRIOR TO FABRICATION.
17. FOR ANY JAMB MEMBER THAT CANNOT BE SIZED AS SPECIFIED IN THE ARCHITECTURAL DRAWINGS, THE CONTRACTOR SHALL SUBSTITUTE IT WITH AN HSS STEEL POST. THE HSS STEEL POST SHALL BE DESIGNED, PROCURED, AND INSTALLED BY THE CONTRACTOR

H2M architects + engineers
538 Broad Hollow Road, 4th Floor East
Melville, NY 11747
631.756.8000 ▪ www.h2m.com
Architecture & Landscape Architecture: No Certificate Required
Engineering Certificate of Authorization No.: 0018178

CONSULTANTS:

MARK	DATE	DESCRIPTION
1	Date 1	Revision 1

STATE OF NEW YORK · SCOTT D. LEHN · 087145 · LICENSED PROFESSIONAL ENGINEER

02/28/2027
Exp. Date

SCOTT D. LEHN, P.E.
NY PROFESSIONAL ENGINEER Lic. No. 087145
"ALTERATION OF THIS DOCUMENT EXCEPT BY A LICENSED PROFESSIONAL IS ILLEGAL"

DESIGNED BY:	DRAWN BY:	CHECKED BY:	REVIEWED BY:
TZY	TZY	SDL	SDL

PROJECT No:	DATE:	SCALE:
WPSD 2203	MARCH 2025	AS SHOWN

CLIENT
WHITE PLAINS CITY SCHOOL DISTRICT

ADDITION AT WHITE PLAINS HIGH SCHOOL

550 NORTH STREET, WHITE PLAINS, NY 10605

66-22-00-01-0-016-030

CONTRACT
CONTRACT G
GENERAL CONSTRUCTION

STATUS
FINAL BID DOCUMENTS

SHEET TITLE
DESIGN CRITERIA AND GENERAL NOTES

DRAWING No.
S 001.00

C:\Users\tyehdego\Documents\WPSD2203_Central21_S_tyehdego.rvt
2/21/2025 5:16:21 PM

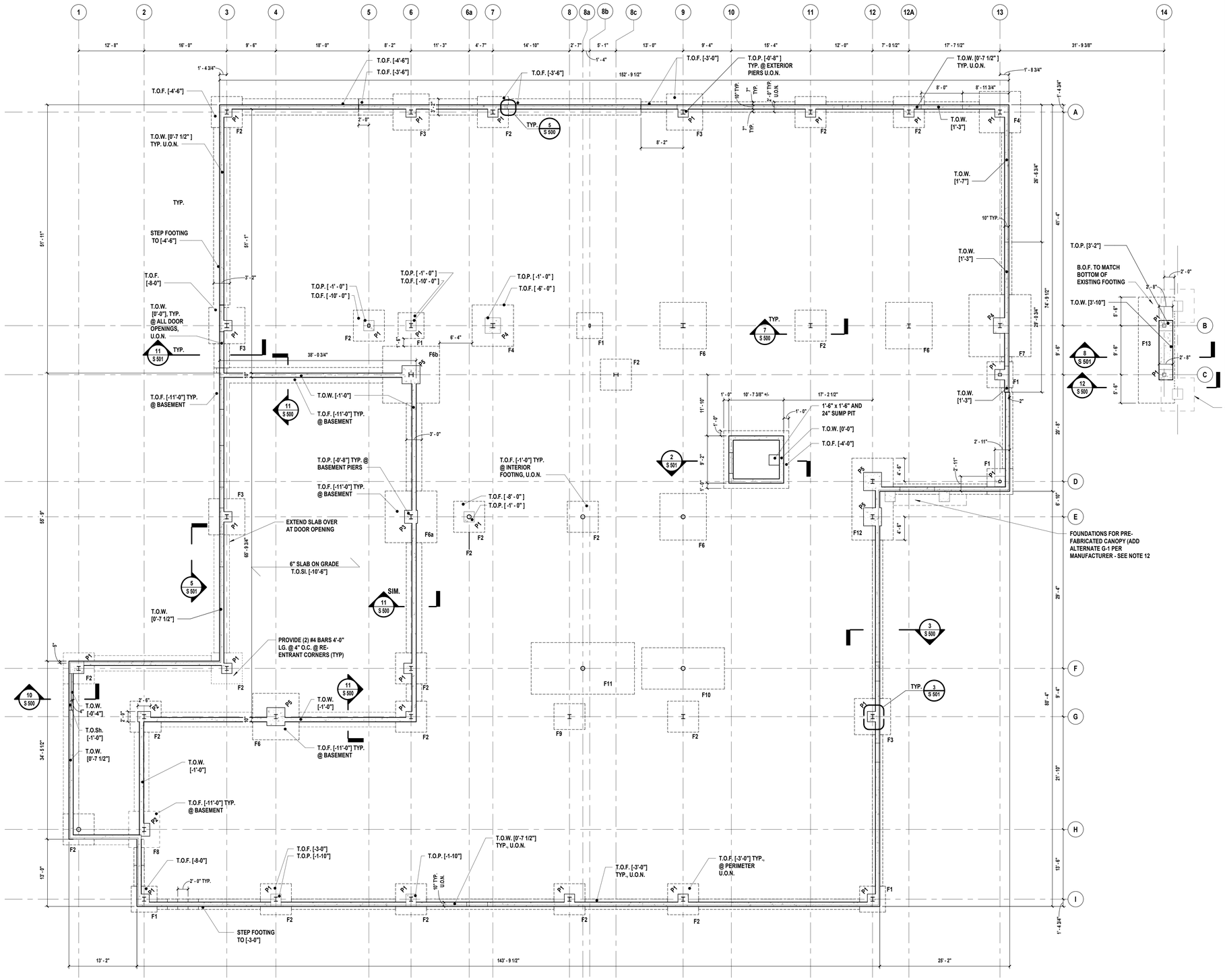

1 Foundation Plan
SCALE: 1/8" = 1'-0"

FOOTING SCHEDULE

FOOTING TYPE	SIZE	THICKNESS	REINFORCEMENT
F1	5'-0" x 5'-0"	12"	(7) #5 BARS BOTT. E.W.
F2	6'-0" x 6'-0"	12"	(7) #5 BARS BOTT. E.W.
F3	7'-0" x 7'-0"	12"	(8) #6 BARS BOTT. E.W.
F4	8'-0" x 8'-0"	15"	(8) #6 BARS T&B E.W.
F5	8'-0" x 8'-0"	18"	(8) #6 BARS T&B E.W.
F6	9'-0" x 9'-0"	18"	(9) #6 BARS T&B E.W.
F6a	10'-0" x 10'-0"	18"	(10) #6 BARS T&B E.W.
F6b	11'-0" x 11'-0"	18"	(12) #6 BARS T&B E.W.
F7	12'-0" x 12'-0"	18"	(11) #6 BARS T&B E.W.
F8	6'-0" x 7'-0"	12"	(6) #5 BARS LONG. AND (7) #5 BARS TRANS. BOTT. (6) #5 BARS LONG. AND (7) #5 BARS TRANS. TOP.
F9	5'-0" x 6'-0"	12"	(8) #5 BARS LONG. AND (6) #5 BARS TRANS. BOTT. (5) #5 BARS LONG. AND (6) #5 BARS TRANS. TOP.
F10	8'-0" x 16'-0"	18"	(15) #6 BARS LONG. AND (14) #6 BARS TRANS. BOTT. (15) #6 BARS LONG. AND (14) #6 BARS TRANS. TOP.
F11	8'-6" x 19'-0"	18"	(15) #8 BARS LONG. AND (9) #7 BARS TRANS. BOTT. (15) #8 BARS LONG. AND (9) #7 BARS TRANS. TOP
F12	13'-10" x 8'-0"	18"	(12) #7 BARS LONG. AND (22) #5 BARS TRANS. BOTT. (7) #7 LONG. AND (21) #6 BARS TRANS. TOP
F13	20'-6" x 7'-0"	12"	(7) #6 BARS LONG. AND (22) #5 BARS TRANS. BOTT. (7) #5 LONG. AND (21) #5 TRANS. TOP

LEGEND:

U.O.N. =	UNLESS OTHERWISE NOTED
F# =	FOOTING DESIGNATION
T.O.F. =	TOP OF FOOTING
T.O.W. =	TOP OF WALL
T.O.Sl. =	TOP OF SLAB
T.O.P. =	TOP OF PEDESTAL
T.O.S. =	TOP OF STEEL
CB =	CONCENTRIC BRACE
T.O.Sh. =	TOP OF METAL DECK, STEEL JOIST, OR EXTERIOR SLAB BEARING SHELF

DESIGN LOADS:

DESIGNED TO ACCORDANCE WITH BCNYS 2020 AND ASCE 7-16.
RISK/OCCUPANCY CATEGORY III.

1. BUILDING DESIGN LOADS:
   - GROUND FLOOR LIVE LOAD = 100 PSF
   - FIRST FLOOR LIVE LOAD
     - CORRIDOR = 80 PSF
     - CLASSROOM = 40 PSF
     - LABORATORIES = 60 PSF
     - DANCE FLOOR = 100 PSF
   - ROOF LIVE LOAD = 20 PSF
   - ROOF DEAD LOAD = 25 PSF
2. SNOW LOADS:

GROUND SNOW LOAD,	Pg = 30 PSF
(EXPOSURE)	Ce = 1.0
(THERMAL)	Ct = 1.0
(IMPORTANCE)	Is = 1.1
SNOW LOAD	Ps= 23.1PSF

3. WIND LOADS:

BASIC WIND SPEED:	125 MPH
MRI 100-YEAR WIND SPEED:	96 MPH
EXPOSURE:	B
IMPORTANCE FACTOR:	Iw = 1.0
EXPOSURE ADJUSTMENT FACTOR:	1.0
INTERNAL PRESSURE COEFFICIENT:	Gcpi = ±0.18

DESIGN WIND LOADS

MWFRS WALL	(END ZONE)	= 26.1 PSF
MWFRS WALL	(INT. ZONE)	= 17.27 PSF
MWFRS ROOF	(END ZONE)	= -13.55 PSF
MWFRS ROOF	(INT. ZONE)	= -10.00 PSF (MIN)
MWFRS ROOF	(UPLIFT)	= -31.30 PSF
COMPONENTS & CLADDING	(WALL PRESSURE)	= 29.56 PSF
	(WALL SUCTION)	= -39.6 PSF
	(ROOF ZONE 1)	= 12 PSF/ -47.1 PSF
	(ROOF ZONE 2)	= 12 PSF/ -62.1 PSF
	(ROOF ZONE 3)	= 12 PSF/ -84.7 PSF

4. SEISMIC CRITERIA:
   - SITE CLASS: D
   - (IMPORTANCE) Ie = 1.25
   - Fa = 1.57 FV = 2.4
   - Ss = 0.288%g S1 = 0.061%g
   - Sms = 0.452 Sm1 = 0.145
   - Sds = 0.301 Sd1 = 0.097
   - SEISMIC DESIGN CATEGORY: B
   - EQUIVALENT LATERAL FORCE PROCEDURE
   - STEEL NOT SPECIFICALLY DESIGNED FOR SEISMIC
   - R = 3.0 Cs = 0.125
5. SOIL BEARING CAPACITY: 2.0 TONS/S.F.
   AS REFERENCED BY WHITESTONE INVESTIGATION PERFORMED BY NOVEMBER 2, 2022

FOUNDATION PLAN NOTES:

1. ELEVATIONS SHOWN THUS [ ] ARE RELATIVE TO FINISHED FIRST FLOOR ELEVATION [0'-0"].
2. BACKFILLING SHALL NOT COMMENCE AT AREAS ADJACENT TO BASEMENT FOUNDATION WALLS UNTIL THE WALL HAS BEEN PROPERLY LATERALLY BRACED.
3. ALL EXCAVATED EARTH SHALL BE REPLACED WITH CONTROLLED STRUCTURAL FILL AS PER SPECIFICATION SECTION 312323.
4. ALL CONCRETE PEDESTALS SHALL BE 2'-5" x 2'-0" AND CONSTRUCTED AS PER DETAILS 9/S500 AND 6/S501 UNLESS OTHERWISE NOTED.
5. ALL CONCRETE PEDESTALS AND COLUMN FOOTINGS SHALL BE CENTERED ON THE COLUMN UNLESS OTHERWISE NOTED.
6. CONTRACTOR SHALL COORDINATE SIZE AND LOCATIONS OF ALL REQUIRED PIPING AND CONDUIT PENETRATIONS THROUGH FOUNDATION WALL WITH ALL OTHER CONTRACTS. PROVIDE PIPE SLEEVES AND REINFORCEMENT AROUND PENETRATIONS AS PER DETAILS 5 AND 7 ON SHEET S 500.
7. REFER TO 'A' DWGS FOR WATERPROOFING INSULATION REQUIREMENTS.
8. COORDINATE LOCATIONS AND DEPTHS OF BEAM POCKETS IN FOUNDATION WALLS WITH FIRST FLOOR FRAMING PLAN.
9. COORDINATE LENGTH OF FOUNDATION WALLS, LOCATIONS AND LAYOUT OF DOORWAYS WITH ARCHITECTURAL DRAWINGS.
10. CONTRACTOR TO COORDINATE FOUNDATION WALL AND PIT DIMENSIONS AT ELEVATOR PIT WITH APPROVED ELEVATOR MANUFACTURER.
11. REFER TO SHEET S110 FOR TYPICAL SLAB ON GRADE PLACEMENT AND JOINT REQUIREMENTS.
12. FOUNDATIONS FOR PRE-FABRICATED CANOPY ARE SHOWN FOR BID AND REFERENCE PURPOSES. CANOPY FABRICATOR SHALL BE RESPONSIBLE FOR FURNISHING A FINAL FOUNDATION DESIGN WITH CANOPY DESIGN. CALCULATIONS SHALL BE AFFIXED WITH A P.E. SIGN AND SEAL. ANY CHANGES RELATED TO CANOPY FOOTING SHALL BE DONE AT NO EXTRA COST TO CLIENT.

COLUMN PIER SCHEDULE

MARK	SIZE	REINFORCEMENT	TIES	ADD'L NOTES
P1	24" x 24"	(3) #8 BARS E.F. - (8 BARS TOTAL)	#4 BARS @ 12" O.C.	
P2	24" x 30"	(3) #8 BARS SW (4) #8 BARS LW (10 BARS TOTAL)	#4 BARS @ 12" O.C.	(4) #4 SHEAR ANCHOR REINFORCEMENT
P3	30" x 30"	(4) #8 BARS E.F. - (12 BARS TOTAL)	#4 BARS @ 12" O.C.	(4) #4 SHEAR ANCHOR REINFORCEMENT
P4	36" x 36"	(6) #8 BARS E.F. - (20 BARS TOTAL)	#4 BARS @ 12" O.C.	(5) #4 SHEAR ANCHOR REINFORCEMENT
P5	42" x 42"	(7) #8 BARS E.F. - (24 BARS TOTAL)	#4 BARS @ 12" O.C.	

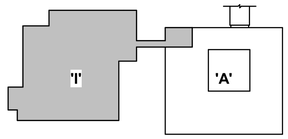

Key Plan
Scale: N.T.S.

H2M architects + engineers
538 Broad Hollow Road, 4th Floor East
Melville, NY 11747
631.756.8000 • www.h2m.com
Architecture & Landscape Architecture: No Certificate Required
Engineering Certificate of Authorization No.: 0018178

CONSULTANTS:

MARK	DATE	DESCRIPTION

STATE OF NEW YORK · SCOTT D. LEHN · 087145 · LICENSED PROFESSIONAL ENGINEER

SCOTT D. LEHN, P.E.
NY PROFESSIONAL ENGINEER Lic. No. 087145
"ALTERATIONS TO THIS DOCUMENT EXCEPT BY A LICENSED PROFESSIONAL ENGINEER, IS ILLEGAL"

S0292027 Exp. Date

DESIGNED BY:	DRAWN BY:	CHECKED BY:	REVIEWED BY:
TZY/JRI	TZY/JRI	SDL	SDL
PROJECT No: WPSD 2203	DATE: MARCH 2025	SCALE: AS SHOWN	

CLIENT

WHITE PLAINS CITY SCHOOL DISTRICT

ADDITION AT WHITE PLAINS HIGH SCHOOL

550 NORTH STREET, WHITE PLAINS, NY 10605

66-22-00-01-0-016-030

CONTRACT
CONTRACT G
GENERAL CONSTRUCTION

STATUS
FINAL BID DOCUMENTS

SHEET TITLE
FOUNDATION PLAN AND DESIGN LOADS

DRAWING No.
S 100.00

C:\Users\jwhedge\Documents\WPSD2203_Central21_S_jwhedge.rvt
2/21/2025 5:16:22 PM

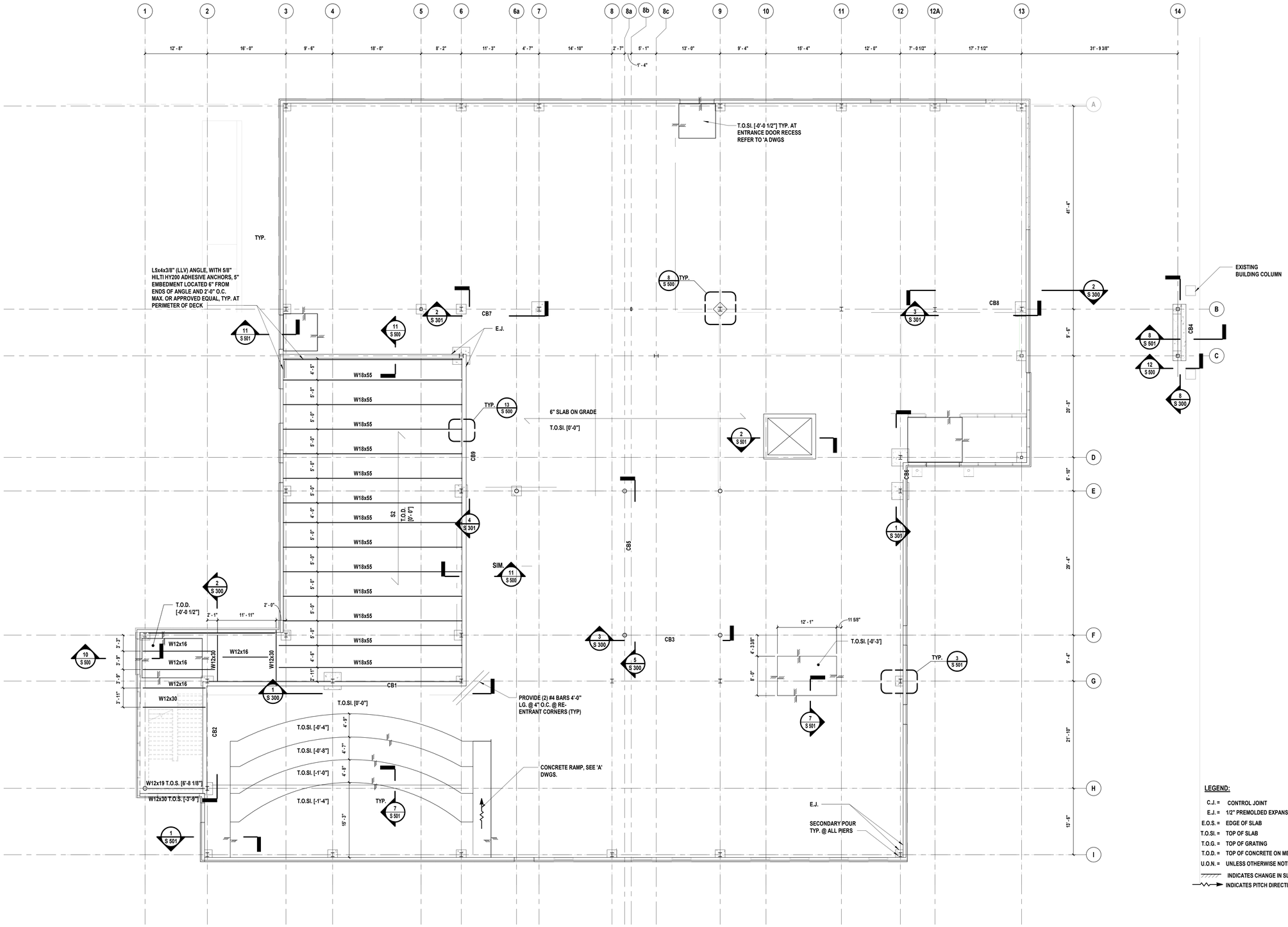

1 Slab/Ground Floor Framing Plan

SCALE: 1/8" = 1'-0"

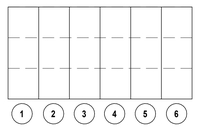

SUGGESTED SEQUENCE OF CASTING STRIPS

2 Control Joint Layout

SCALE: 1/2" = 1'-0"

SLAB-ON-GRADE NOTES:

1. SLAB ON GRADE SHALL BE PLACED IN STRIPS, AS SHOWN IN "SUGGESTED SEQUENCE OF CASTING STRIPS".
2. CONTROL JOINTS SHALL BE SAWCUT AS SOON CONCRETE IS HARD ENOUGH NOT TO BE TORN OR DAMAGED BY THE BLADE, AND BEFORE THE CONCRETE STARTS TO COOL. TYPICALLY JOINTS SHOULD BE CUT 4 TO 12 HOURS AFTER THE SLAB HAS BEEN FINISHED, DEPENDING UPON WEATHER AND JOB CONDITIONS.
3. SPACING OF SAWCUT CONTROL JOINTS (IN FEET) TO BE APPROXIMATELY THREE TIMES THE SLAB THICKNESS IN INCHES, WITH A MAXIMUM OF TWENTY (20) FEET.
4. A MAXIMUM RATIO OF 1.5 SHALL BE MAINTAINED BETWEEN LONG AND SHORT DIMENSIONS OF PANELS FORMED BY CONSTRUCTION AND CONTROL JOINTS.

LEGEND:

- STRIPS CAST FIRST
- INFILL STRIPS
- FORMED JOINTS
- SAWCUT JOINTS

NOTES:

1. ELEVATIONS SHOWN THUS [ ] ARE RELATIVE TO FINISHED FIRST FLOOR ELEVATION [0'-0"].
2. S1 INDICATES 6" CONCRETE SLAB ON GRADE REINFORCED WITH 4x4 - W4.0xW4.0 W.W.F.
3. S2 INDICATES SPAN OF 4" CONCRETE SLAB, REINFORCED WITH 4x4 - W4.0xW4.0 W.W.F. AND 1.5C 20GA. METAL FORM DECK AS MANUFACTURED BY VULCRAFT NUCOR OR APPROVED EQUAL. DECK IS DESIGNED AS A 3-SPAN CONDITION.
4. PROVIDE 1/2" PRE-MOLDED EXPANSION JOINT AROUND PERIMETER OF CONCRETE SLAB ON METAL DECK AND SLAB ON GRADE WHERE IT ABUTS THE FOUNDATION WALL OF THE BUILDING.
5. PROVIDE CONTINUOUS 12 GA. POURSTOP WITH 18 GA. CELL CLOSURE AROUND PERIMETER OF FLOOR SLAB WHERE IT ABUTS THE FOUNDATION WALL AND AT EDGES OF SLAB OPENINGS, TYP.
6. PROVIDE SLAB ON GRADE CONTROL JOINTS ACCORDING TO DETAIL ON THIS SHEET.

LEGEND:

C.J. =	CONTROL JOINT
E.J. =	1/2" PREMOLDED EXPANSION JOINT
E.O.S. =	EDGE OF SLAB
T.O.SI. =	TOP OF SLAB
T.O.G. =	TOP OF GRATING
T.O.D. =	TOP OF CONCRETE ON METAL DECK
U.O.N. =	UNLESS OTHERWISE NOTED

INDICATES CHANGE IN SLAB ELEVATION

INDICATES PITCH DIRECTION OF SLAB

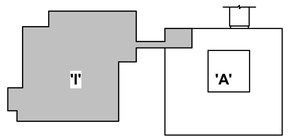

Key Plan

Scale: N.T.S.

H2M architects + engineers

538 Broad Hollow Road, 4th Floor East
Melville, NY 11747
631.756.8000 • www.h2m.com
Architecture & Landscape Architecture: No Certificate Required
Engineering Certificate of Authorization No.: 0018178

CONSULTANTS:

MARK	DATE	DESCRIPTION

STATE OF NEW YORK · SCOTT D. LEHN · 087145 · LICENSED PROFESSIONAL ENGINEER

SCOTT D. LEHN, P.E.
NY PROFESSIONAL ENGINEER Lic. No. 087145

DESIGNED BY:	DRAWN BY:	CHECKED BY:	REVIEWED BY:
TZY	TZY	SDL	SDL

PROJECT No:	DATE:	SCALE:
WPSD 2203	MARCH 2025	AS SHOWN

CLIENT

WHITE PLAINS CITY SCHOOL DISTRICT

ADDITION AT WHITE PLAINS HIGH SCHOOL

550 NORTH STREET, WHITE PLAINS, NY 10605

66-22-00-01-0-016-030

CONTRACT

CONTRACT G
GENERAL CONSTRUCTION

STATUS

FINAL BID DOCUMENTS

SHEET TITLE

SLAB PLAN

DRAWING No.

S 110.00

C:\Users\tyelledge\Documents\WPSD2203_Central21_S_tyelledge.rvt
2/21/2025 5:16:22 PM

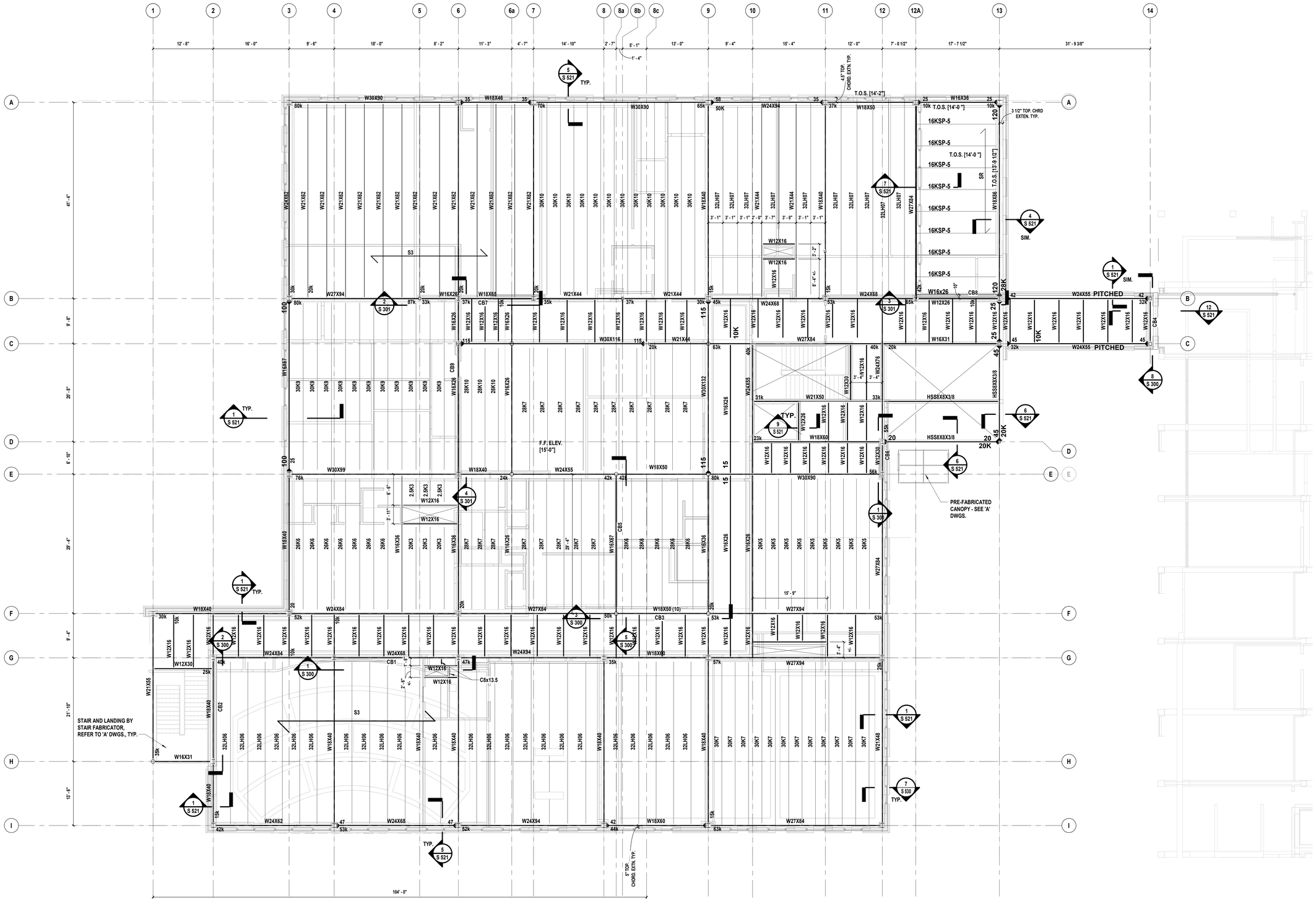

1 First Floor Framing Plan
SCALE: 1/8" = 1'-0"

NOTES:

1. TOP OF STEEL SHALL BE SET AT [14 ' - 7 "] ABOVE FINISHED FIRST FLOOR ELEVATION UNLESS OTHERWISE NOTED AS THUS [ ].
2. TOP OF STEEL BEAMS THAT ARE SUPPORTING LH SERIES JOISTS AND K SERIES JOIST TO BE SET AT [14 ' - 2"] AND [14'-4 1/2"] RESPECTIVELY ABOVE FINISHED FIRST FLOOR ELEVATION UNLESS OTHERWISE NOTED AS THUS [ ].
3. S3 — INDICATES SPAN OF 5" CONCRETE SLAB, REINFORCED WITH 4x4 - W4.0xW4.0 W.W.F. AND 1.5C 20GA. METAL FORM DECK AS MANUFACTURED BY VULCRAFT NUCOR OR APPROVED EQUAL.
4. SR — INDICATES SPAN OF 1.5B 20GA. METAL FORM DECK AS MANUFACTURED BY VULCRAFT NUCOR OR APPROVED EQUAL.
5. INSTALL BRIDGING FOR BAR JOISTS AS PER S.J.I. REQUIREMENTS.
6. REFER TO 'ARCH' DWGS FOR EDGE OF SLAB DIMENSIONS.
7. A / B k — INDICATES BEAM TO COLUMN MOMENT CONNECTION WITH THE NUMBER REPRESENTING THE ASD MOMENT CAPACITY IN FT-KIPS AND SHEAR IN KIPS.
8. STEEL CONNECTION PIECE DETAILS SHALL BE SUBMITTED WITH CALCULATIONS SIGNED AND SEALED BY A NEW YORK STATE LICENSED PROFESSIONAL ENGINEER. CONNECTION DESIGNER SHALL DESIGN ALL MOMENT CONNECTIONS AND SIMPLE SHEAR CONNECTIONS. WHERE DESIGN SHEAR REACTION IS NOT LISTED ON DRAWINGS, IT SHALL BE DETERMINED BY THE CONNECTION DESIGNER AS THE MAXIMUM REACTION RESULTING FROM THE INDICATED BEAM SECTION BEING FULLY LOADED WITH MAXIMUM ALLOWABLE UNIFORM LOADS AS SPECIFIED IN AISC SPECIFICATION. WHERE AXIAL FORCE IN BEAMS IN NOT LISTED IN DRAWINGS, IT SHALL BE TAKEN AS 10 KIPS ASD. ALL CONNECTIONS SHALL BE DESIGNED CONSIDERING AXIAL, SHEAR AND MOMENT FORCES SIMULTANEOUSLY AS REQUIRED BY BUILDING CODE. SEE STRUCTURAL STEEL SPECIFICATIONS FOR ADDITIONAL DESIGN LOADING REQUIREMENTS.
9. COORDINATE DIMENSIONS OF STAIR LANDING FRAMING WITH STAIR MANUFACTURER. SEE 'A' DWGS. FOR ADDITIONAL INFORMATION.
9. ALL LIGHT GAUGE EXTERIOR STUD WALLS, BOX HEADERS, CANOPY CONNECTION POINTS, AND SILLS SHALL BE DESIGNED BY THE COLD FORMED STEEL FABRICATOR. THE FABRICATOR'S ENGINEER SHALL SUBMIT A FULL SET OF CALCULATIONS AFFIXED WITH A NEW YORK STATE P.E.'S SIGN & SEAL TO THE A/E OF RECORD TO REVIEW. DESIGN OF COLD-FORMED STEEL FRAMING SHALL INCLUDE CONSIDERATION FOR ALL APPLICABLE LOADS AS SHOWN ON SHEET S 100.00 AND SHALL BE IN CONFORMANCE WITH THE BUILDING CODE OF NEW YORK STATE. EXTERIOR CLADDING SYSTEMS AND ANCILLARY STRUCTURES INCLUDING CANOPIES SUPPORTED BY THE COLD FORMED STEEL SYSTEM SHALL BE CONSIDERED ACCORDINGLY. REFER TO SPECIFICATION 054000 FOR ADDITIONAL REQUIREMENT
10. METAL DECK SHALL BE FASTENED TO STRUCTURAL STEEL FRAMING USING A 36/9 FASTENER PATTERN. SUPPORT FASTENERS SHALL BE 5/8" PUDDLE WELDS AND SIDELAP FASTENERS SHALL BE (3) #12 TEK SCREWS.

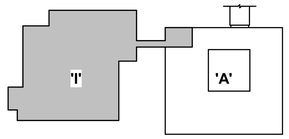

Key Plan
Scale: N.T.S.

H2M architects + engineers
538 Broad Hollow Road, 4th Floor East
Melville, NY 11747
631.756.8000 • www.h2m.com
Architecture & Landscape Architecture: No Certificate Required
Engineering Certificate of Authorization No.: 0018178

CONSULTANTS:

MARK	DATE	DESCRIPTION

STATE OF NEW YORK · SCOTT D. LEHN · 087145 · LICENSED PROFESSIONAL ENGINEER

SCOTT D. LEHN, P.E.
NY PROFESSIONAL ENGINEER Lic. No. 087145
THE PRODUCTION OF THIS DOCUMENT EXCEPT BY LICENSED PROFESSIONAL IS ILLEGAL

DESIGNED BY:	DRAWN BY:	CHECKED BY:	REVIEWED BY:
TZY	TZY/JRI	SDL	SDL
PROJECT No: WPSD 2203	DATE: MARCH 2025	SCALE: AS SHOWN	

CLIENT
WHITE PLAINS CITY SCHOOL DISTRICT

ADDITION AT WHITE PLAINS HIGH SCHOOL

550 NORTH STREET, WHITE PLAINS, NY 10605

66-22-00-01-0-016-030

CONTRACT
CONTRACT G
GENERAL CONSTRUCTION

STATUS
FINAL BID DOCUMENTS

SHEET TITLE
FIRST FLOOR FRAMING PLAN

DRAWING No.
S 120.00

C:\Users\jyrihdego\Documents\WPSD2203_Cecil\R21_S_jyrihdego.rvt

2/21/2025 5:16:27 PM

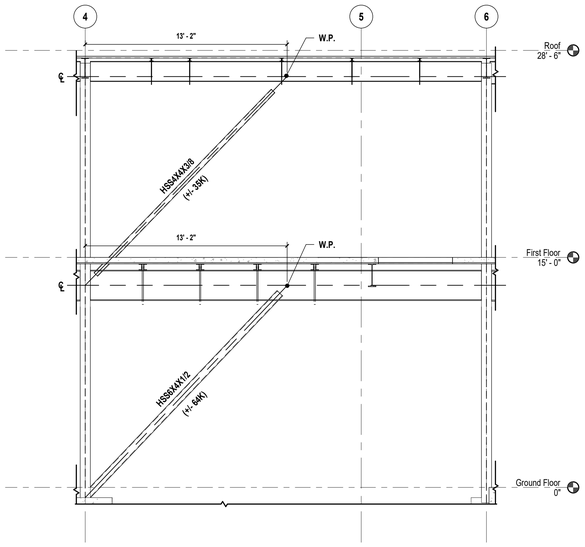

1 Section-CB1
SCALE: 1/4" = 1'-0"

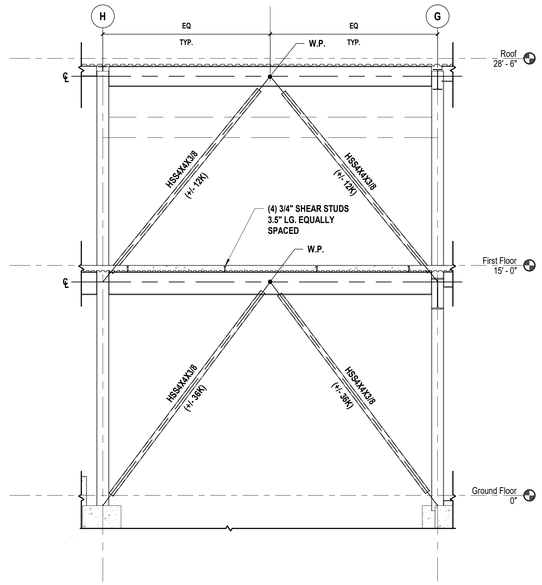

2 Section-CB2
SCALE: 1/4" = 1'-0"

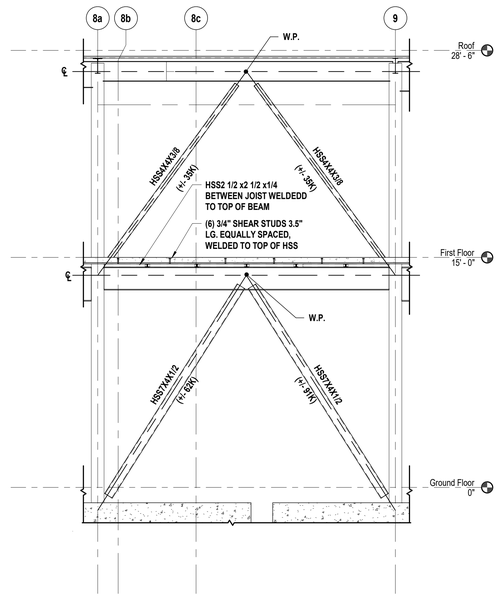

3 Section-CB3
SCALE: 1/4" = 1'-0"

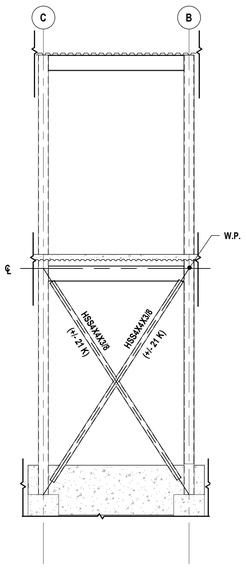

8 Section - CB4
SCALE: 1/4" = 1'-0"

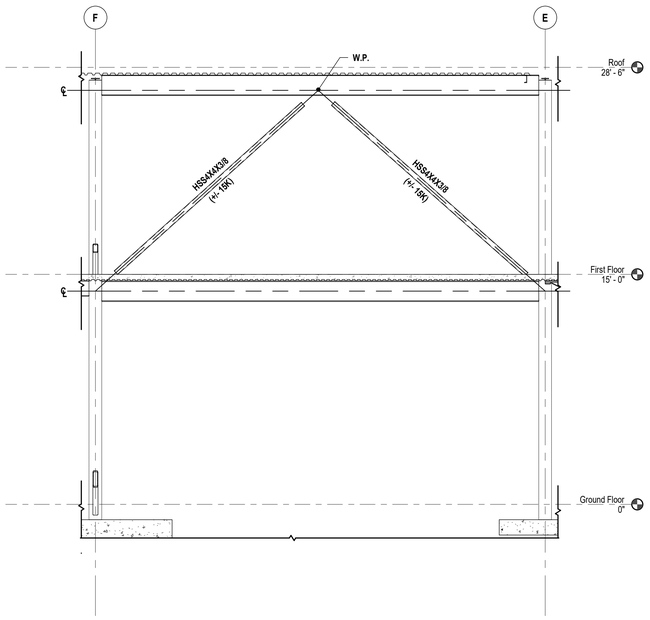

5 Section CB5
SCALE: 1/4" = 1'-0"

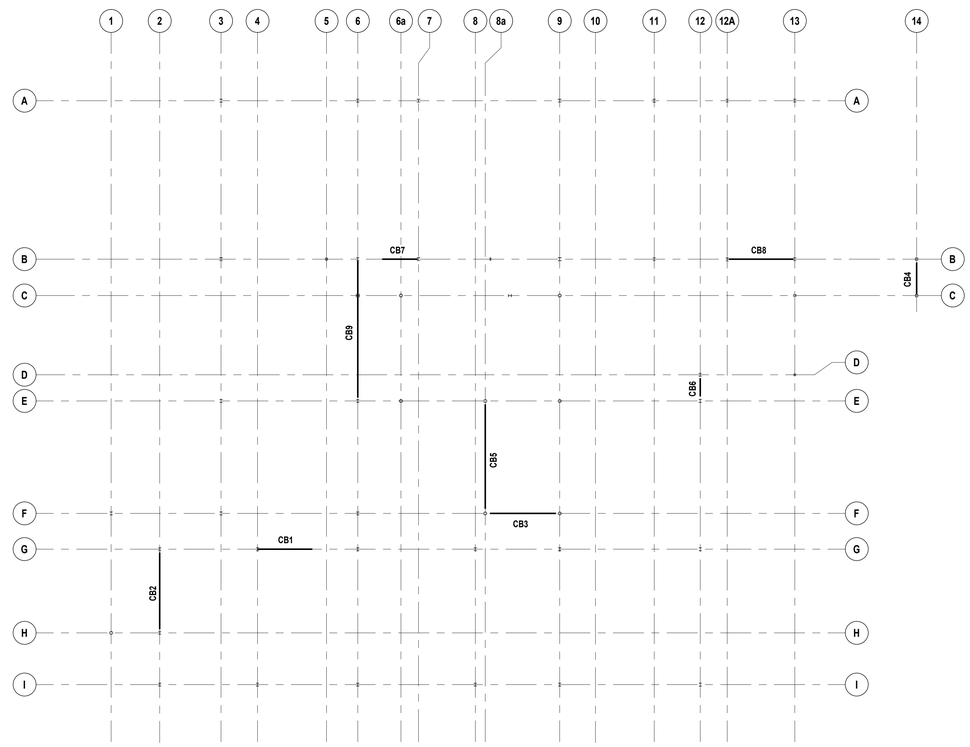

4 Braced Frame Plan
SCALE: 1/16" = 1'-0"

NOTE: BRACES LOADS SHOWN ARE ALL LRFD LOADS

C:\Users\tyehdego\Documents\WPSD2203_Central21_S_tyehdego.rvt

2/21/2025 5:16:28 PM

H2M architects + engineers

538 Broad Hollow Road, 4th Floor East
Melville, NY 11747
631.756.8000 • www.h2m.com
Architecture & Landscape Architecture: No Certificate Required
Engineering Certificate of Authorization No.: 0018178

CONSULTANTS:

MARK	DATE	DESCRIPTION

STATE OF NEW YORK · SCOTT D. LEHN · 087145 · LICENSED PROFESSIONAL ENGINEER

02/20/2025
Exp. Date

SCOTT D. LEHN, P.E.
NY PROFESSIONAL ENGINEER Lic. No. 087145
"IN TRANSMITTING THIS DOCUMENT EXCEPT BY A LICENSED PROFESSIONAL ENGINEER, IS A CLIENT."

DESIGNED BY:	DRAWN BY:	CHECKED BY:	REVIEWED BY:
TZY	JES	SDL	SDL
PROJECT No:	DATE:	SCALE:	
WPSD 2203	MARCH 2025	AS SHOWN	

CLIENT

WHITE PLAINS CITY SCHOOL DISTRICT

ADDITION AT WHITE PLAINS HIGH SCHOOL

White Plains Public Schools · WP · REAL LIFE LEARNING

550 NORTH STREET, WHITE PLAINS, NY 10605

66-22-00-01-0-016-030

CONTRACT
CONTRACT G
GENERAL CONSTRUCTION

STATUS
FINAL BID DOCUMENTS

SHEET TITLE
BUILDING BRACES

DRAWING No.
S 300.00

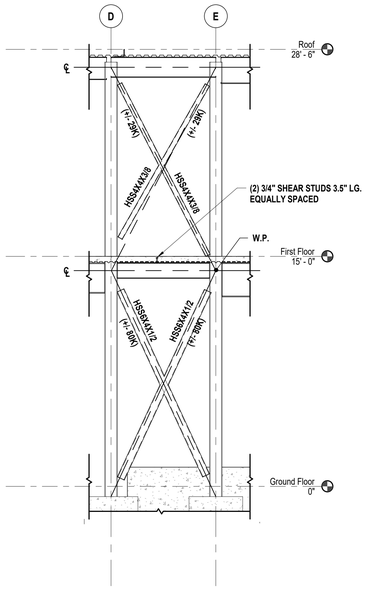

1 Section CB6
SCALE: 1/4" = 1'-0"

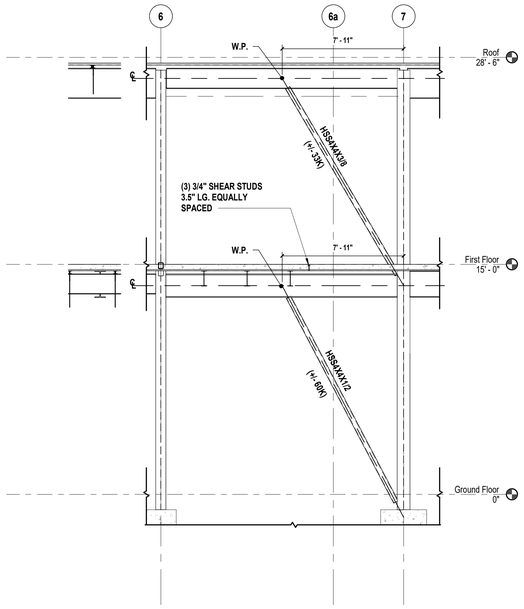

2 Section CB7
SCALE: 1/4" = 1'-0"

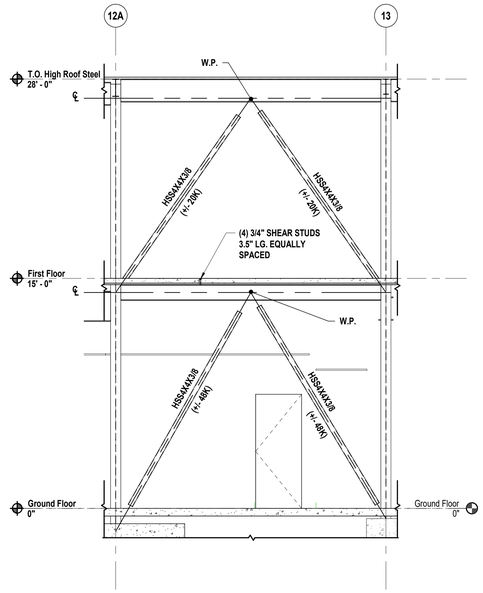

3 Section CB8
SCALE: 1/4" = 1'-0"

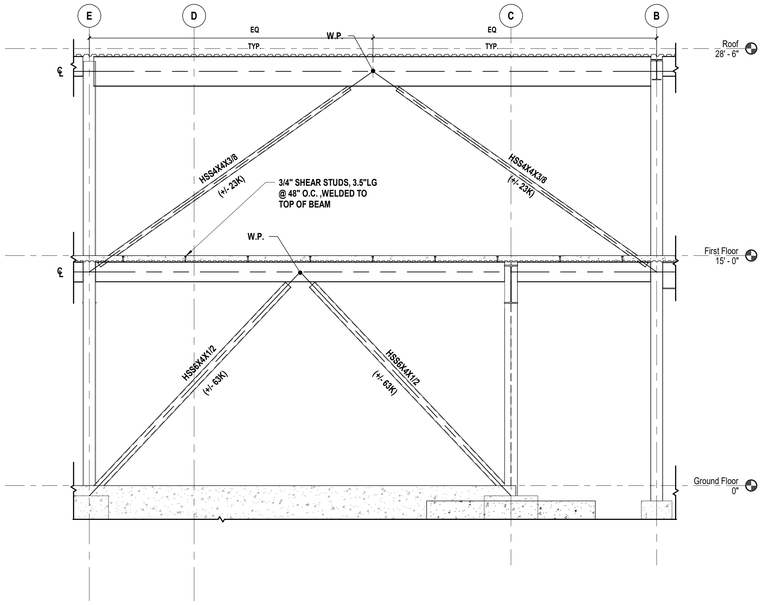

4 Section CB9
SCALE: 1/4" = 1'-0"

NOTE: BRACES LOADS SHOWN ARE ALL LRFD LOADS

H2M architects + engineers
538 Broad Hollow Road, 4th Floor East
Melville, NY 11747
631.756.8000 • www.h2m.com
Architecture & Landscape Architecture: No Certificate Required
Engineering Certificate of Authorization No.: 0018178

CONSULTANTS:

MARK	DATE	DESCRIPTION

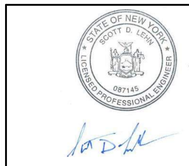

SCOTT D. LEHN, P.E.
NY PROFESSIONAL ENGINEER Lic. No. 087145
Exp. Date

DESIGNED BY:	DRAWN BY:	CHECKED BY:	REVIEWED BY:
TZY	JES	SDL	SDL

PROJECT No:	DATE:	SCALE:
WPSD 2203	MARCH 2025	AS SHOWN

CLIENT

WHITE PLAINS CITY SCHOOL DISTRICT

ADDITION AT WHITE PLAINS HIGH SCHOOL

550 NORTH STREET, WHITE PLAINS, NY 10605

66-22-00-01-0-016-030

CONTRACT

CONTRACT G
GENERAL CONSTRUCTION

STATUS

FINAL BID DOCUMENTS

SHEET TITLE

BUILDING BRACES

DRAWING No.

S 301.00

C:\Users\tyehdego\Documents\WPSD2203_Central21_S_tyehdego.rvt
2/21/2025 5:16:29 PM

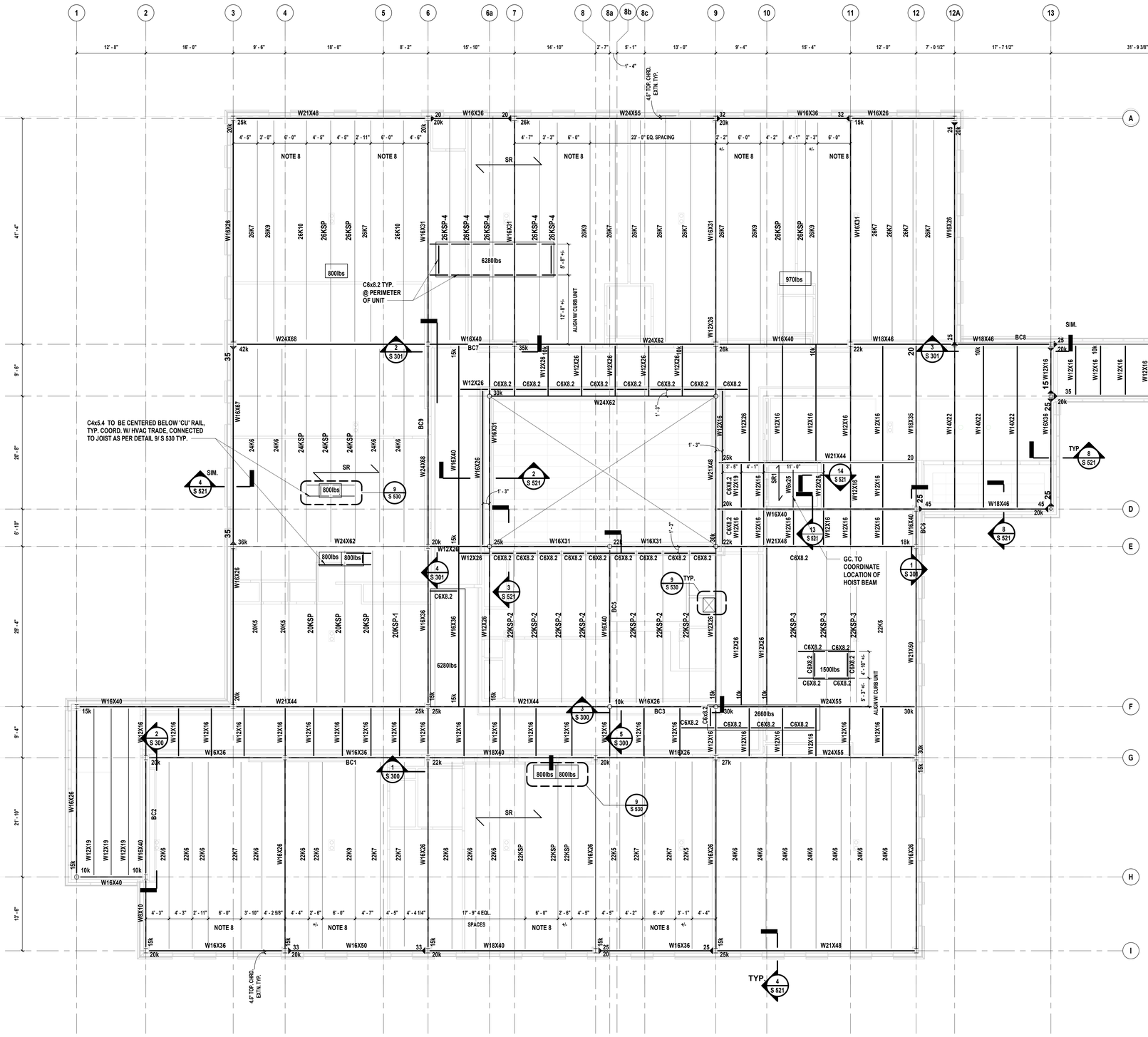

1 Roof Framing Plan
SCALE: 1/8" = 1'-0"

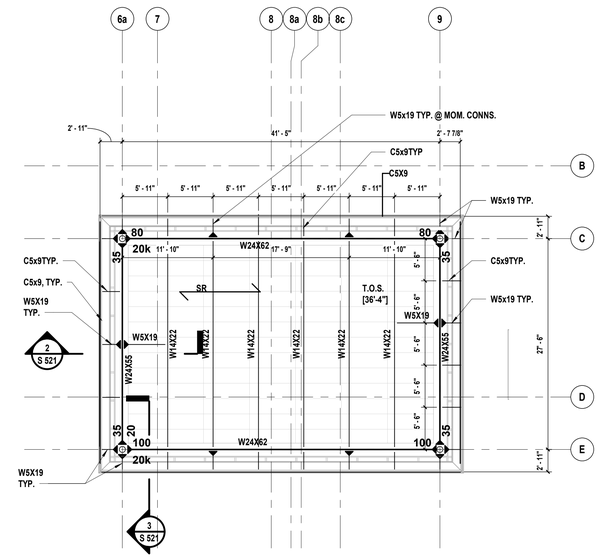

2 Upper Roof Framing Plan
SCALE: 1/8" = 1'-0"

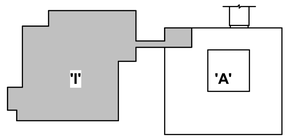

Key Plan
Scale: N.T.S.

NOTES:

1. TOP OF STEEL SHALL BE SET AT [28 ' - 0 "] ABOVE FINISHED FIRST FLOOR ELEVATION UNLESS OTHERWISE NOTED AS THUS [ ].
2. TOP OF STEEL BEAMS THAT ARE SUPPORTING K SERIES JOIST TO BE SET AT [27 ' - 9 1/2"] ABOVE FINISHED FIRST FLOOR ELEVATION UNLESS OTHERWISE NOTED AS THUS [ ].
3. FOR FRAMING NOTES REFER TO SHEET S 120.
4. METAL DECK SHALL BE FASTENED TO STRUCTURAL STEEL FRAMING USING A 36/9 FASTENER PATTERN. SUPPORT FASTENERS SHALL BE 5/8" PUDDLE WELDS AND SIDELAP FASTENERS SHALL BE #12 @ 18" O.C. TEK SCREWS.
5. SR INDICATES SPAN OF 1.5B20 METAL FORM DECK AS MANUFACTURED BY VULCRAFT NUCOR OR APPROVED EQUAL.
6. SR1 INDICATES SPAN OF 3NL-32, 20GA METAL FORM DECK AS MANUFACTURED BY VULCRAFT NUCOR OR APPROVED EQUAL.
7. INSTALL HORIZONTAL AND UPLIFT BRIDGING FOR BAR JOISTS AS PER S.J.I. REQUIREMENTS.
8. PLACEMENT OF JOISTS IN THIS AREA HAS BEEN ADJUSTED TO ACCOMMODATE PROPOSED HVAC UNIT INSTALLATION. CONTRACTOR TO CONFIRM AND COORDINATE FINAL PLACEMENT WITH HVAC TRADE WORK.

H2M architects + engineers
538 Broad Hollow Road, 4th Floor East
Melville, NY 11747
631.756.8000 • www.h2m.com
Architecture & Landscape Architecture: No Certificate Required
Engineering Certificate of Authorization No.: 0018178

CONSULTANTS:

MARK	DATE	DESCRIPTION

STATE OF NEW YORK · SCOTT D. LEHN · 087145 · LICENSED PROFESSIONAL ENGINEER

SCOTT D. LEHN, P.E.
NY PROFESSIONAL ENGINEER Lic. No. 087145
"IN TRUTH OF THE DOCUMENT EXCEPT BY LICENSED PROFESSIONAL ENGINEER"

DESIGNED BY:	DRAWN BY:	CHECKED BY:	REVIEWED BY:
TZY	JRI/JES	SDL	SDL
PROJECT No:	DATE:	SCALE:	
WPSD 2203	MARCH 2025	AS SHOWN	

CLIENT

WHITE PLAINS CITY SCHOOL DISTRICT

ADDITION AT WHITE PLAINS HIGH SCHOOL

White Plains Public Schools · WP · REAL LIFE LEARNING

550 NORTH STREET, WHITE PLAINS, NY 10605

66-22-00-01-0-016-030

CONTRACT
ALL CONTRACTS

STATUS
FINAL BID DOCUMENTS

SHEET TITLE
ROOF FRAMING PLAN

DRAWING No.
S 310.00

C:\Users\tyehdego\Documents\WPSD2203_Central21_S_tyehdego.rvt
2/21/2025 5:16:30 PM

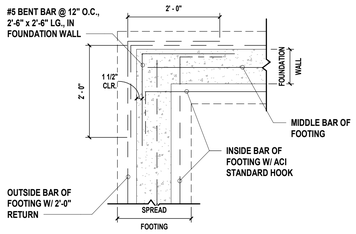

PLAN VIEW

NOTES:

1. VERTICAL WALL REINFORCEMENT NOT SHOWN FOR CLARITY.

1 Corner of Building Fnd/Ftg
SCALE: NTS

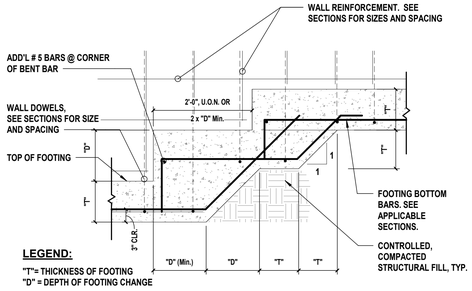

LEGEND:

"T"= THICKNESS OF FOOTING
"D" = DEPTH OF FOOTING CHANGE

NOTES:

1. TOP REINFORCEMENT FOR RETAINING WALL/ COLUMN SUPPORT FOOTINGS NOT SHOWN FOR CLARITY.

2 Stepped Footing
SCALE:N.T.S.

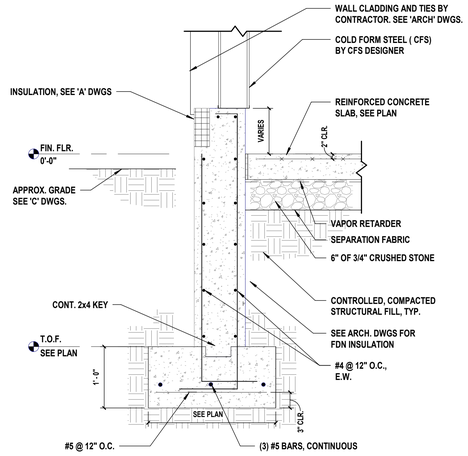

3 Foundation Wall Detail
SCALE: NTS

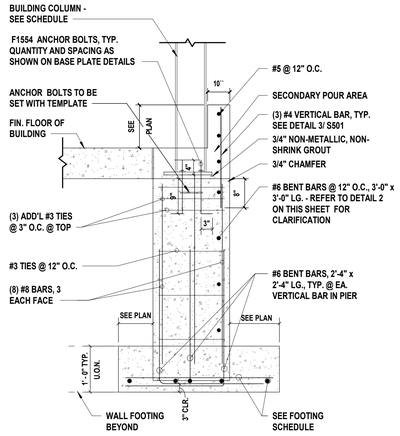

4 Pier Footing
SCALE: N T S

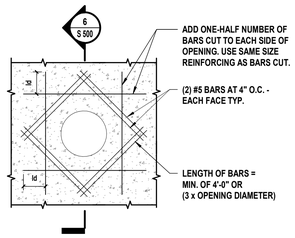

5 Pipe Penetration at Wall or Slab (Elevation)
SCALE:NTS

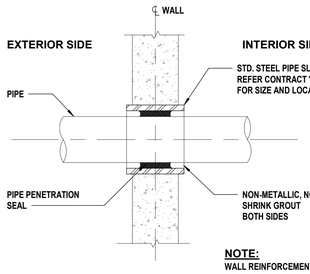

NOTE:
WALL REINFORCEMENT NOT SHOWN FOR CLARITY - SEE DETAIL THIS SHEET.

6 Pipe Penetration at Wall or Slab
SCALE:NTS

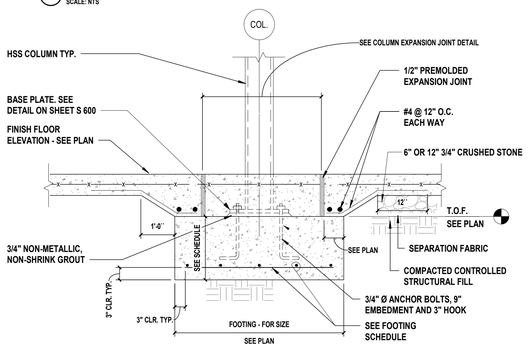

7 Interior Footing Detail
SCALE: NTS

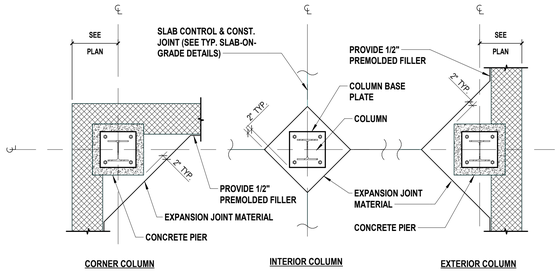

NOTES:

1. PROTECT ISOLATION AREA FROM WATER INTRUSION PRIOR TO PLACEMENT OF CONCRETE.
2. POUR CONC. WITHIN ISOLATION JT. DOWN TO TOP OF PIER OR FOOTING AFTER COLUMN & SLAB ARE INSTALLED.

8 Typical Isolation Joint Detail
SCALE: 1/2" = 1'-0"

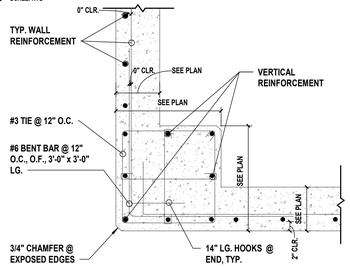

PLAN VIEW

NOTE:

1. CONDITION AT SINGLE LAYER OF WALL REINFORCEMENT SHOWN. DOUBLE LAYER REINFORCEMENT CONDITION SIMILAR. 3'-0" x 3'-0" LONG BENT BARS REQUIRED AT OUTSIDE FACE ONLY.

9 Corner Pier/Foundation Wall Intersection
SCALE:N T S

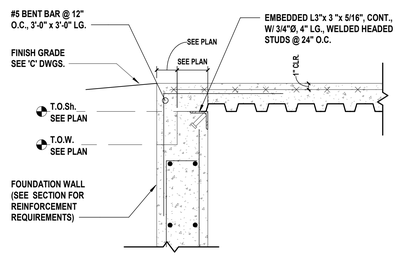

10 Foundation Wall/Slab Junction at Doorways
SCALE: 1" = 1'-0"

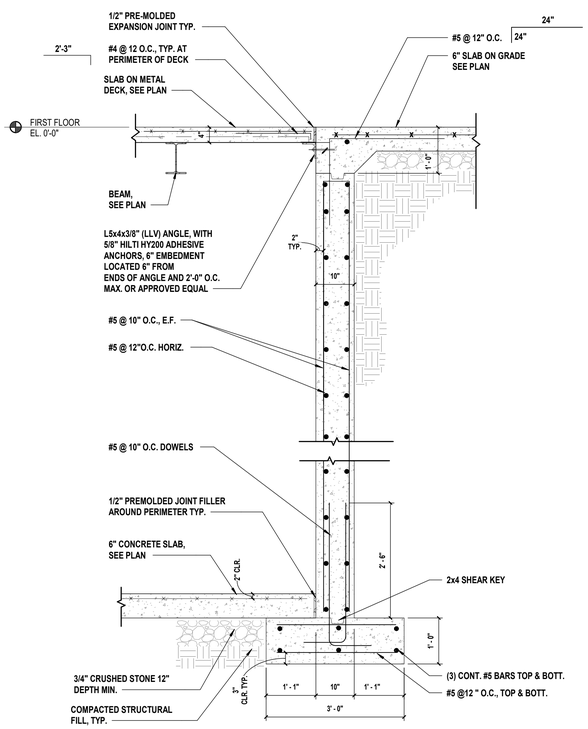

11 Section @ Foundation Wall
SCALE: 3/4" = 1'-0"

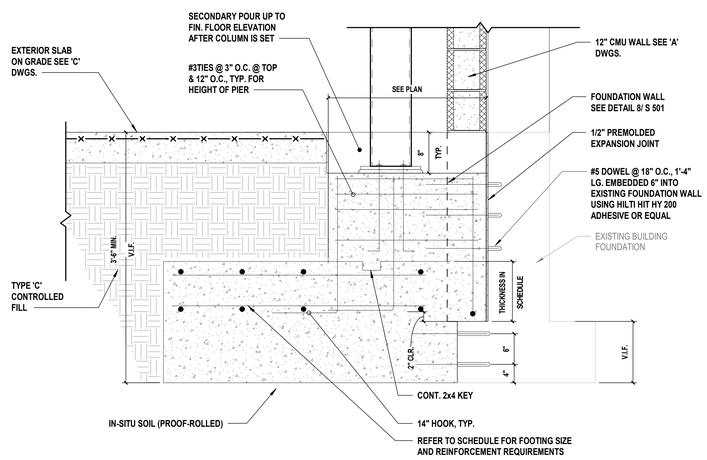

12 Column Footing Adjacent to Existing Building
SCALE:N T S

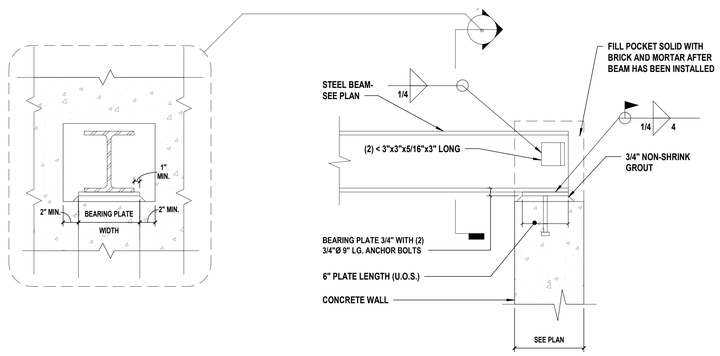

13 Beam Pocket At Concrete Wall
SCALE:NTS

H 2 M architects + engineers

538 Broad Hollow Road, 4th Floor East
Melville, NY 11747
631.756.8000 • www.h2m.com
Architecture & Landscape Architecture: No Certificate Required
Engineering Certificate of Authorization No.: 0018178

CONSULTANTS:

MARK	DATE	DESCRIPTION

STATE OF NEW YORK · SCOTT D. LEHN · 087145 · LICENSED PROFESSIONAL ENGINEER

SCOTT D. LEHN, P.E.
82292027
Exp. Date
BY PROFESSIONAL ENGINEER LIC. NO. 087145
THE CREATION OF THIS DOCUMENT EXCEPT BY A LICENSED PROFESSIONAL IS ILLEGAL

DESIGNED BY:	DRAWN BY:	CHECKED BY:	REVIEWED BY:
TZY	TZY	SDL	SDL
PROJECT No: WPSD 2203	DATE: MARCH 2025	SCALE: AS SHOWN	

CLIENT
WHITE PLAINS CITY SCHOOL DISTRICT

ADDITION AT WHITE PLAINS HIGH SCHOOL

White Plains Public Schools · WP · REAL LIFE LEARNING

550 NORTH STREET, WHITE PLAINS, NY 10605

66-22-00-01-0-016-030

CONTRACT
CONTRACT G
GENERAL CONSTRUCTION

STATUS
FINAL BID DOCUMENTS

SHEET TITLE
STRUCTURAL BUILDING FOUNDATION DETAILS

DRAWING No.
S 500.00

C:\Users\lyshdesign\Documents\WPSD2203_Central21_S_lyshdesign.rvt
2/21/2025 5:16:31 PM

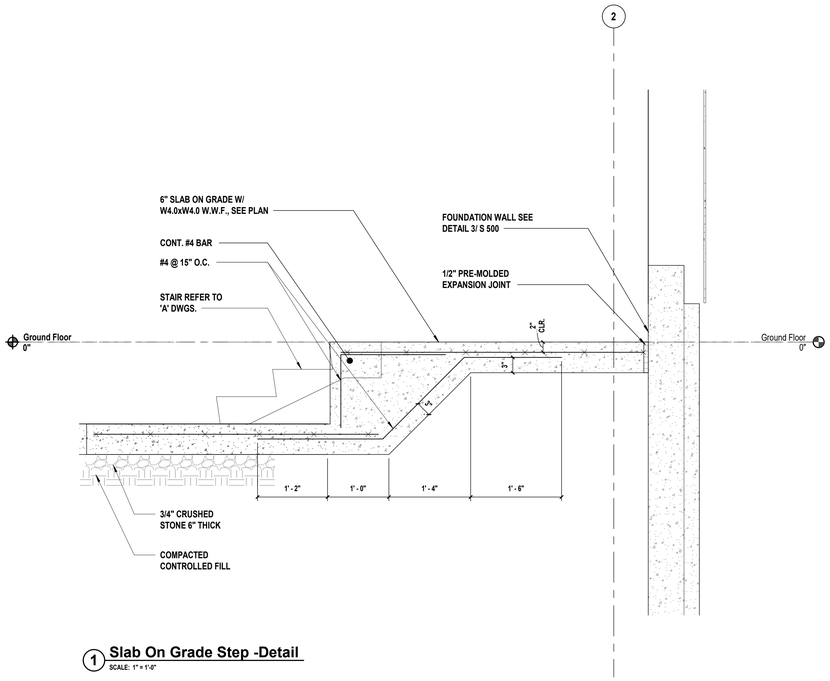

1 Slab On Grade Step -Detail
SCALE: 1" = 1'-0"

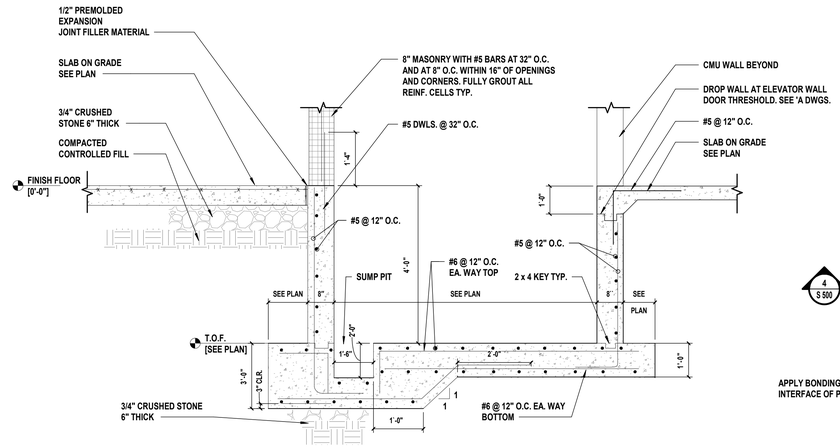

2 Section at Elevator Pit with Sump Pit
SCALENTS

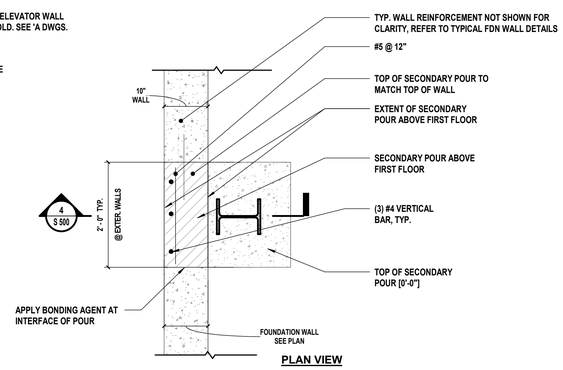

3 Typical Pier Secondary Pour Detail at 10" Curb
SCALEN T S

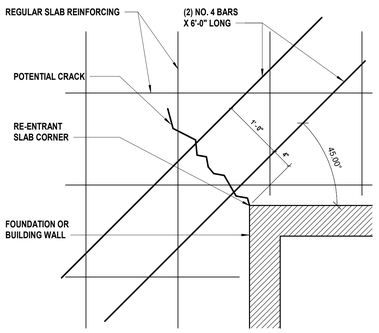

NOTE: THIS DETAIL IS ALSO APPLICABLE TO TRENCH DRAIN ENDS. LENGTH OF REBAR TO BE 2'-0".

4 Typical Slab Re-Entrant Corner Reinforcement
SCALE:N.T.S.

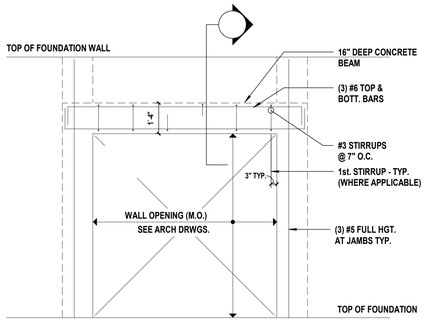

NOTE:
1. WALL REINFORCEMNT NOT SHOWN FOR CLARITY. REFER TO DETAIL

5 Reinforced Concrete Lintel and Jamsb (Elevation)
SCALENTS

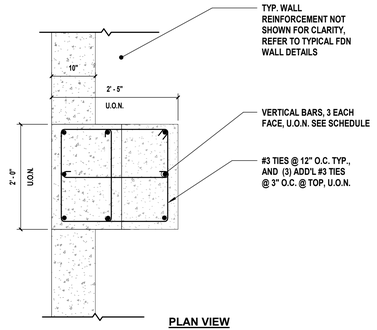

6 Typical Pier/Foundation Wall Intersection
SCALEN T S

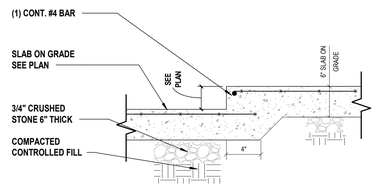

NOTE:
VAPOR BARRIER TO BE CONTINUOUS UNDER THICKENED SLAB.

7 Slab On Grade -Elevation Change
SCALE:24" = 0'-1"

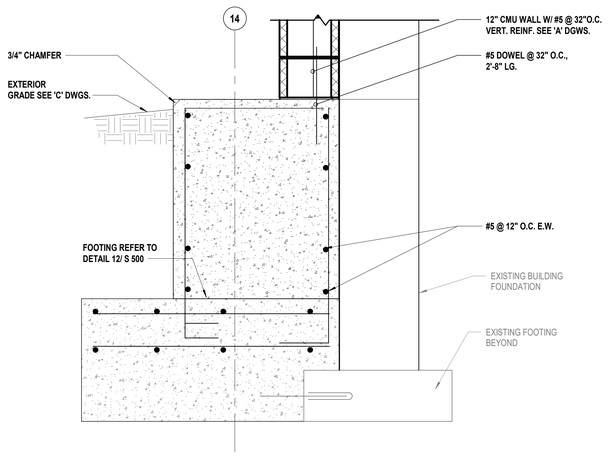

8 Fire Wall Foundation
SCALE: 1" = 1'-0"

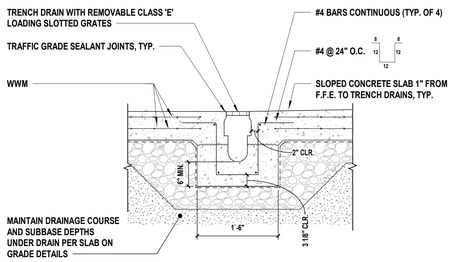

9 Typical Section at Trench Drain
SCALE:N.T.S.

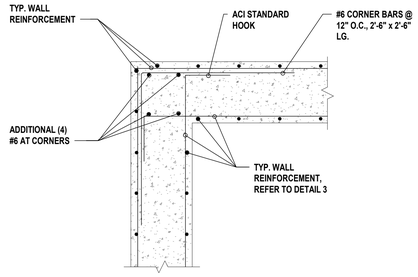

10 Foundation Wall Corner Reinforcement with Additional Vertical Bars
SCALE: 1" = 1'-0"

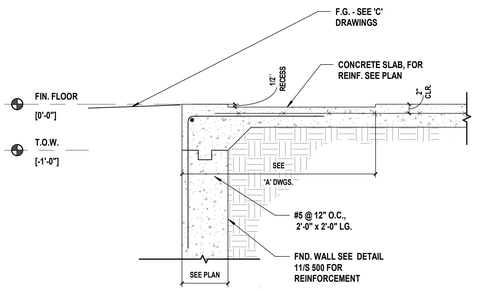

11 Foundation Wall @ Door Opening
SCALE:3/4" = 1'-0"

H2M architects + engineers
538 Broad Hollow Road, 4th Floor East
Melville, NY 11747
631.756.8000 • www.h2m.com
Architecture & Landscape Architecture: No Certificate Required
Engineering Certificate of Authorization No.: 0018178

CONSULTANTS:

MARK	DATE	DESCRIPTION

STATE OF NEW YORK · SCOTT D. LEHN · 087145 · LICENSED PROFESSIONAL ENGINEER

SCOTT D. LEHN, P.E.
BY PROFESSIONAL ENGINEER LIC. NO. 087145

02/20/2027 Exp. Date

DESIGNED BY:	DRAWN BY:	CHECKED BY:	REVIEWED BY:
TZY	TZY	SDL	SDL
PROJECT No: WPSD 2203	DATE: MARCH 2025	SCALE: AS SHOWN	

CLIENT
WHITE PLAINS CITY SCHOOL DISTRICT

ADDITION AT WHITE PLAINS HIGH SCHOOL

550 NORTH STREET, WHITE PLAINS, NY 10605

66-22-00-01-0-016-030

CONTRACT
CONTRACT G
GENERAL CONSTRUCTION

STATUS
FINAL BID DOCUMENTS

SHEET TITLE
FOUNDATION DETAILS

DRAWING No.
S 501.00

C:\Users\bynkedge\Documents\WPSD2203_Central\21_S_bynkedge.rvt

2/21/2025 5:16:32 PM

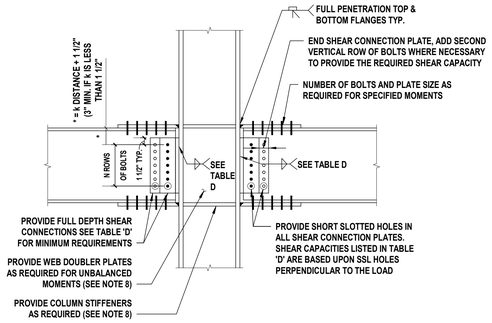

L.L.R.S. MOMENT CONNECTION TO COLUMN FLANGE

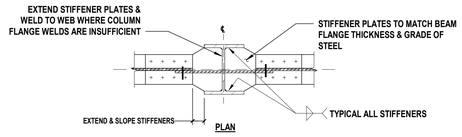

PLAN

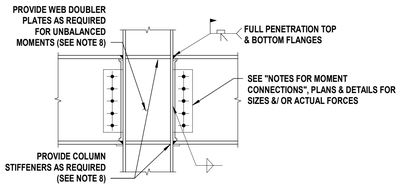

L.L.R.S. MOMENT CONNECTION TO COLUMN FLANGE

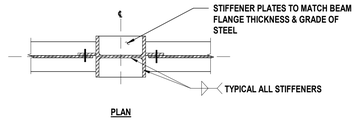

PLAN

1 L.R.S.S. Moment Connection Details
SCALE: 3/4" = 1'-0"

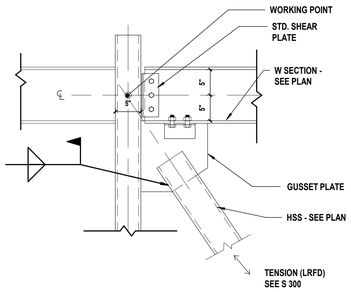

2 Bracing Connection
SCALE: NTS

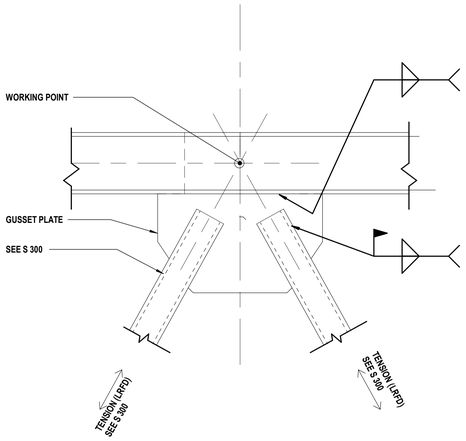

3 Beam Mid-span Bracing Connection Detail
SCALE: 1 1/2" = 1'-0"

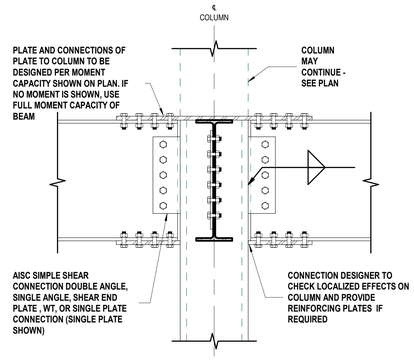

NOTES:

1. CONTRACTOR'S CALCULATIONS SHALL VERIFY HSS/PIPE WALL THICKNESS IS ADEQUATE FOR CONNECTION TYPE CHOSEN PER AISC

4 Typical Beam to HSS/Pipe Column Moment Connection
SCALE: 1" = 1'-0"

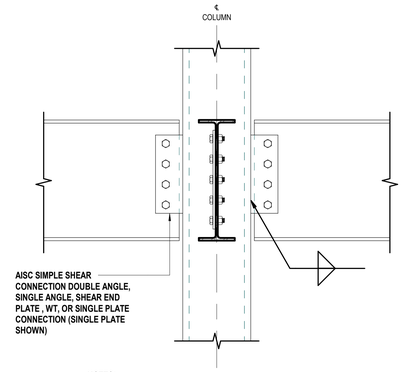

NOTES:

1. CONTRACTOR'S CALCULATIONS SHALL VERIFY HSS/PIPE WALL THICKNESS IS ADEQUATE FOR CONNECTION TYPE CHOSEN PER AISC

5 Typical Beam to HSS/Pipe Column Shear Connection
SCALE: 1" = 1'-0"

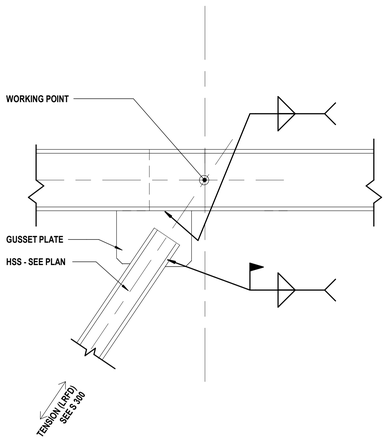

6 Beam Bracing Connection Detail
SCALE: 1 1/2" = 1'-0"

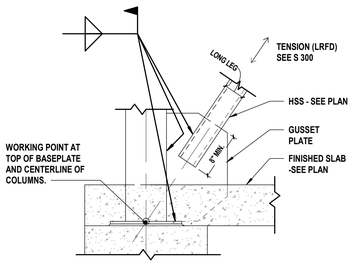

7 Bracing Connection at Base
SCALE: 1" = 1'-0"

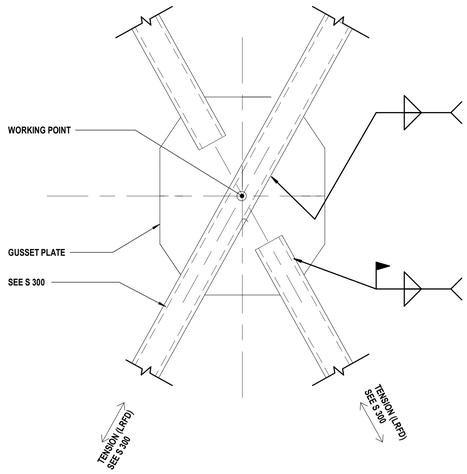

8 Cross Bracing Connection Detail
SCALE: 1 1/2" = 1'-0"

H2M architects + engineers

538 Broad Hollow Road, 4th Floor East
Melville, NY 11747
631.756.8000 • www.h2m.com
Architecture & Landscape Architecture: No Certificate Required
Engineering Certificate of Authorization No.: 0018178

CONSULTANTS:

MARK	DATE	DESCRIPTION

STATE OF NEW YORK · SCOTT D. LEHN · 087145 · LICENSED PROFESSIONAL ENGINEER

SCOTT D. LEHN, P.E.
BY PROFESSIONAL ENGINEER LIC. NO. 087145

02/28/2027
Exp. Date

THE TRADITION OF THIS DOCUMENT EXCEPT BY A LICENSED PROFESSIONAL IS ILLEGAL

DESIGNED BY:	DRAWN BY:	CHECKED BY:	REVIEWED BY:
TZY	TZY	SDL	SDL

PROJECT No:	DATE:	SCALE:
WPSD 2203	MARCH 2025	AS SHOWN

CLIENT

WHITE PLAINS CITY SCHOOL DISTRICT

ADDITION AT WHITE PLAINS HIGH SCHOOL

550 NORTH STREET, WHITE PLAINS, NY 10605

66-22-00-01-0-016-030

CONTRACT

CONTRACT G
GENERAL CONSTRUCTION

STATUS

FINAL BID DOCUMENTS

SHEET TITLE

STRUCTURAL STEEL DETAILS

DRAWING No.

S 520.00

C:\Users\synhdesign\Documents\WPSD2203_Central21_S_synhdesign.rvt

2/21/2025 5:16:33 PM

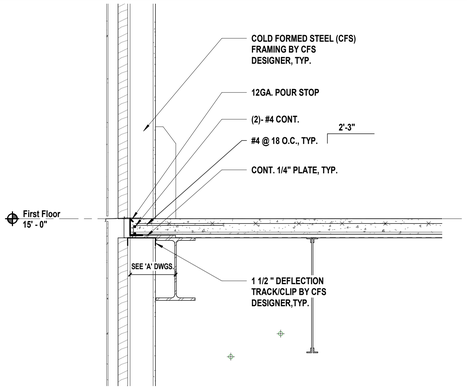

1 Exterior Edge -Deck Bearing Detail
SCALE: 3/4" = 1'-0"

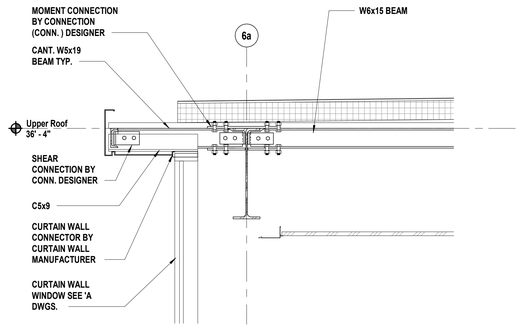

2 Section at Penthouse Roof- Moment Connection Beam to Beam
SCALE: 3/4" = 1'-0"

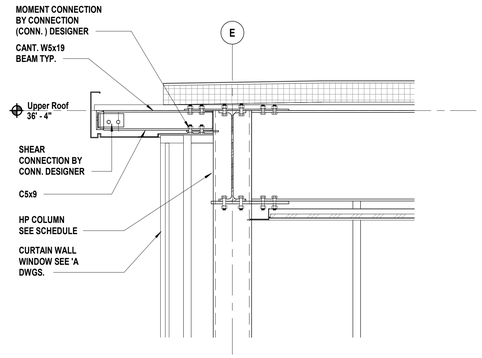

3 Section at Penthouse Roof-Moment Connection to Pipe
SCALE: 3/4" = 1'-0"

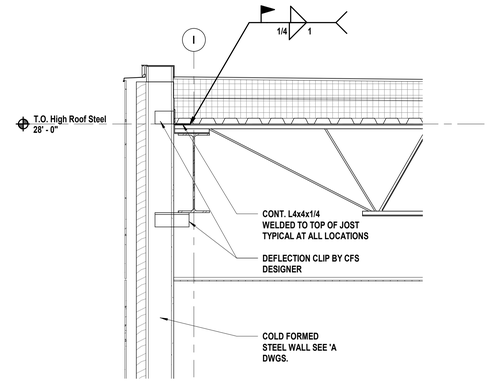

4 Typical Roof Detail
SCALE: 3/4" = 1'-0"

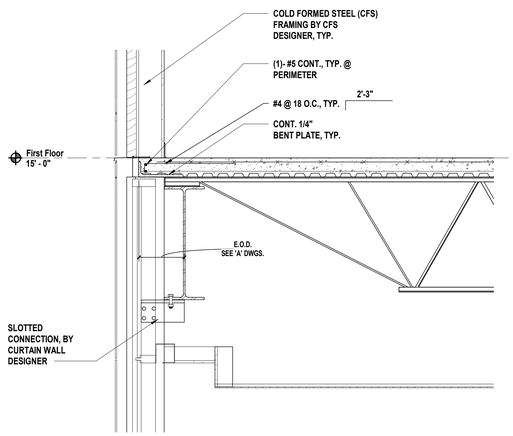

5 Curtain Wall Detail at Frist Floor
SCALE: 3/4" = 1'-0"

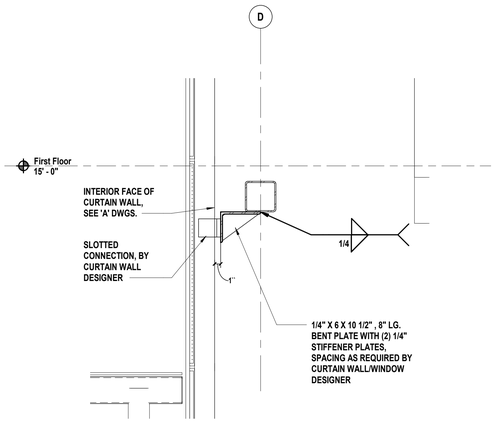

6 Typical Second Floor Connection at Curtain Wall Detail
SCALE: 3/4" = 1'-0"

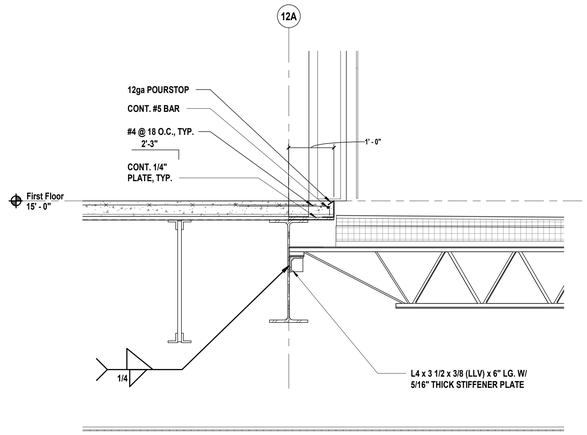

7 Section Frist FLoor -Low Roof Transition
SCALE: 3/4" = 1'-0"

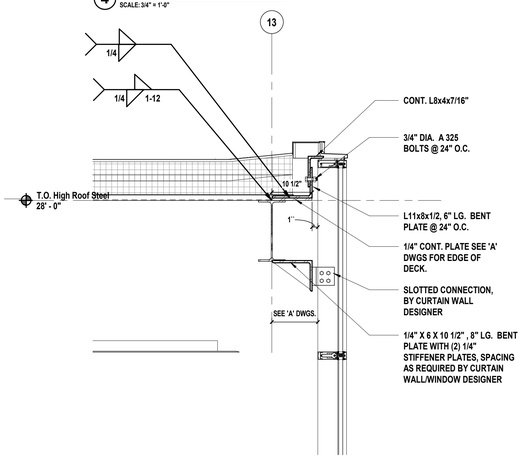

8 Typical Roof Connection at Curtain Wall Detail
SCALE: 3/4" = 1'-0"

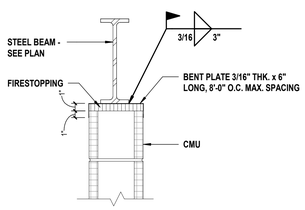

9 Beam Bracing Top of CMU Wall
SCALENTS

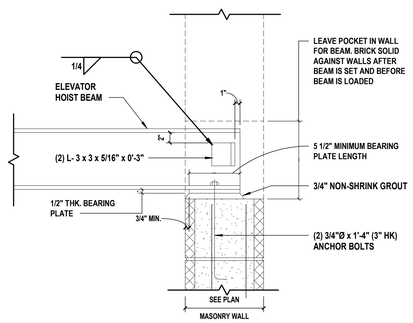

10 Beam Bearing on CMU Wall
SCALE: 1" = 1'-0"

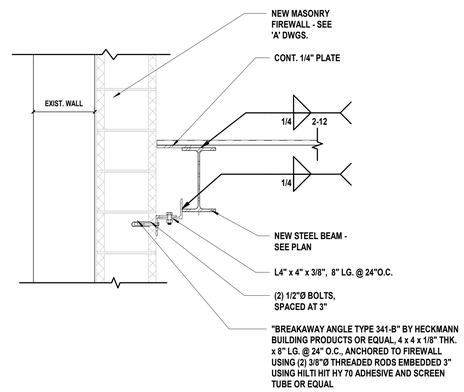

11 Firewall Connection at Steel Framing
SCALE: 1" = 1'-0"

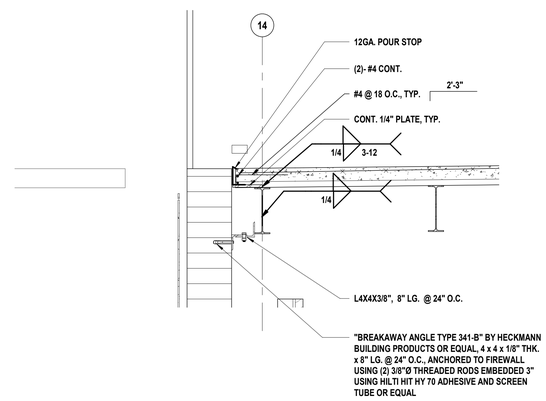

12 Section @ New and Existing Floor Transition
SCALE: 3/4" = 1'-0"

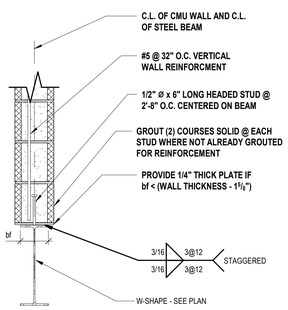

13 Typical Detail of CMU Wall Bearing on Steel Beam
SCALE: 1" = 1'-0"

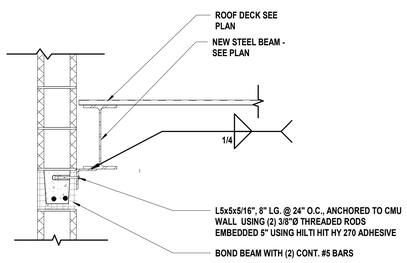

14 CMU Wall Bracing Detail
SCALE: 1" = 1'-0"

H2M architects + engineers
538 Broad Hollow Road, 4th Floor East
Melville, NY 11747
631.756.8000 • www.h2m.com
Architecture & Landscape Architecture: No Certificate Required
Engineering Certificate of Authorization No.: 0018178

CONSULTANTS:

MARK	DATE	DESCRIPTION

STATE OF NEW YORK · SCOTT D. LEHN · 087145 · LICENSED PROFESSIONAL ENGINEER

SCOTT D. LEHN, P.E.
BY PROFESSIONAL ENGINEER LIC. NO. 087145

82292027 Exp. Date
"ALTERATION OR FOR ACCURATE COPY BY A LICENSED PROFESSIONAL ENGINEER"

DESIGNED BY:	DRAWN BY:	CHECKED BY:	REVIEWED BY:
TZY	TZY	SDL	SDL
PROJECT No: WPSD 2203	DATE: MARCH 2025	SCALE: AS SHOWN	

CLIENT

WHITE PLAINS CITY SCHOOL DISTRICT

ADDITION AT WHITE PLAINS HIGH SCHOOL

White Plains Public Schools · WP · REAL LIFE LEARNING

550 NORTH STREET, WHITE PLAINS, NY 10605

66-22-00-01-0-016-030

CONTRACT
CONTRACT G
GENERAL CONSTRUCTION

STATUS
FINAL BID DOCUMENTS

SHEET TITLE
STRUCTURAL DETAILS

DRAWING No.
S 521.00

C:\Users\tyarbrough\Documents\WPSD2203_Central21_S_tyarbrough.rvt

2/21/2025 5:16:38 PM

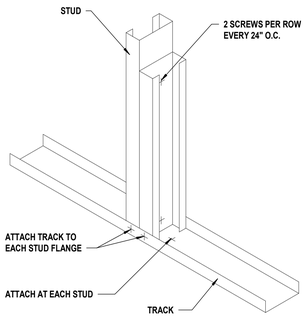

1 **Back-to-Back Studs**
SCALE: 3/4" = 1'-0"

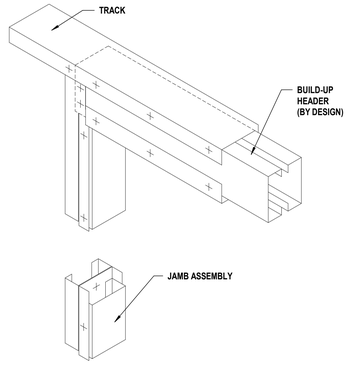

NOTE:
FASTEN BUILT-UP MEMBER TOGETHER AT 12" O.C. MAX

2 **Bearing Header**
SCALE: 3/4" = 1'-0"

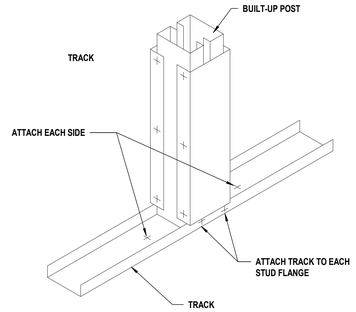

NOTE:
FASTEN BUILT-UP MEMBER TOGTHER AT 12" O.C.MAX

3 **Built-Up Post**
SCALE: 3/4" = 1'-0"

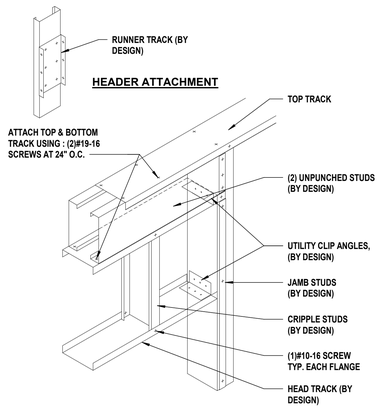

4 **Boxed Header Connection**
SCALE: 3/4" = 1'-0"

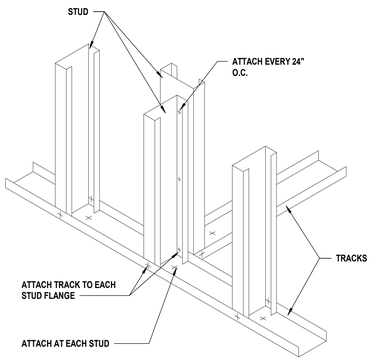

5 **Partition Intersection**
SCALE: 3/4" = 1'-0"

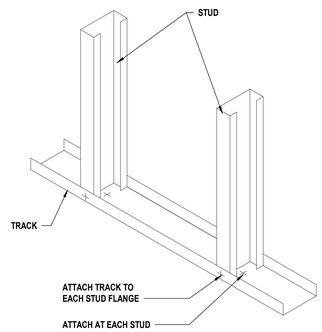

6 **Studs In Place**
SCALE: 3/4" = 1'-0"

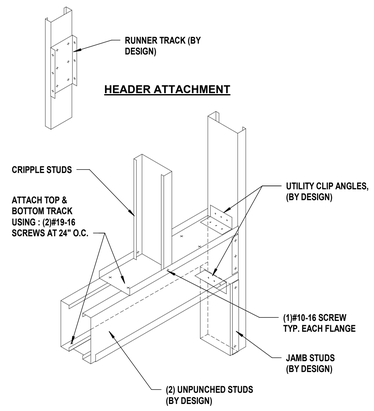

7 **Boxed Header Connection**
SCALE: 3/4" = 1'-0"

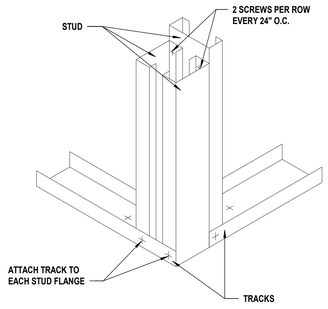

8 **Three Stud Corner**
SCALE: 3/4" = 1'-0"

H 2 M architects + engineers

538 Broad Hollow Road, 4th Floor East
Melville, NY 11747
631.756.8000 • www.h2m.com
Architecture & Landscape Architecture: No Certificate Required
Engineering Certificate of Authorization No.: 0018178

CONSULTANTS:

MARK	DATE	DESCRIPTION

STATE OF NEW YORK · SCOTT D. LEHN · 087145 · LICENSED PROFESSIONAL ENGINEER

02/28/2027
Exp. Date

SCOTT D. LEHN, P.E.
NY PROFESSIONAL ENGINEER Lic. No. 087145
"ALTERATION OF THIS DOCUMENT EXCEPT BY A LICENSED PROFESSIONAL IS A VIOLATION"

DESIGNED BY:	DRAWN BY:	CHECKED BY:	REVIEWED BY:
TZY	TZY	SDL	SDL

PROJECT No:	DATE:	SCALE:
WPSD 2203	MARCH 2025	AS SHOWN

CLIENT
WHITE PLAINS CITY SCHOOL DISTRICT

ADDITION AT WHITE PLAINS HIGH SCHOOL

550 NORTH STREET, WHITE PLAINS, NY 10605

66-22-00-01-0-016-030

CONTRACT
CONTRACT G
GENERAL CONSTRUCTION

STATUS
FINAL BID DOCUMENTS

SHEET TITLE
CFS FRAMING ISOMETRIC DETAILS

DRAWING No.
S 522.00

C:\Users\jwhelego\Documents\WPSD2203_Central21_S_jwhelego.rvt
2/21/2025 5:16:38 PM

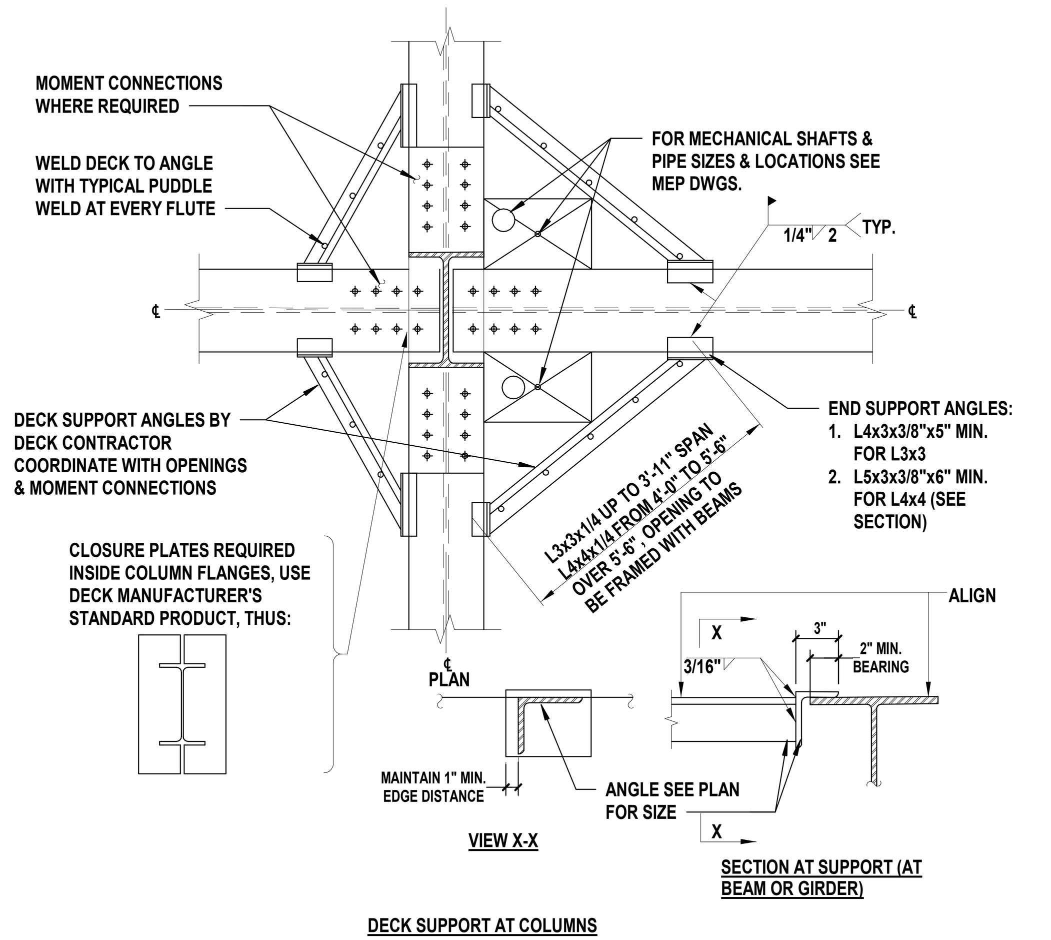

1 Column Deck Support Details
SCALE: 3/4" = 1'-0"

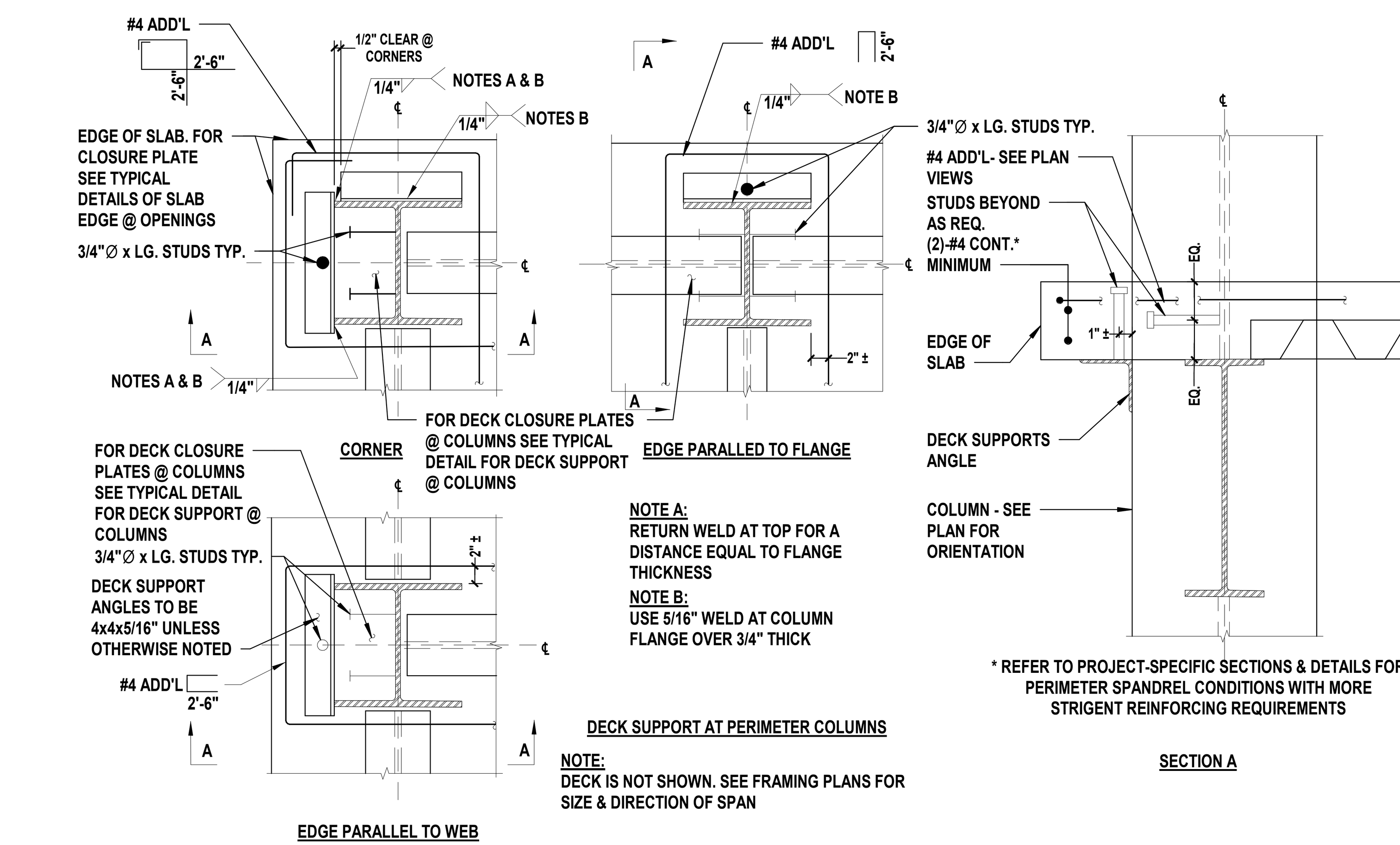

2 Edge Details
SCALE: 3/4" = 1'-0"

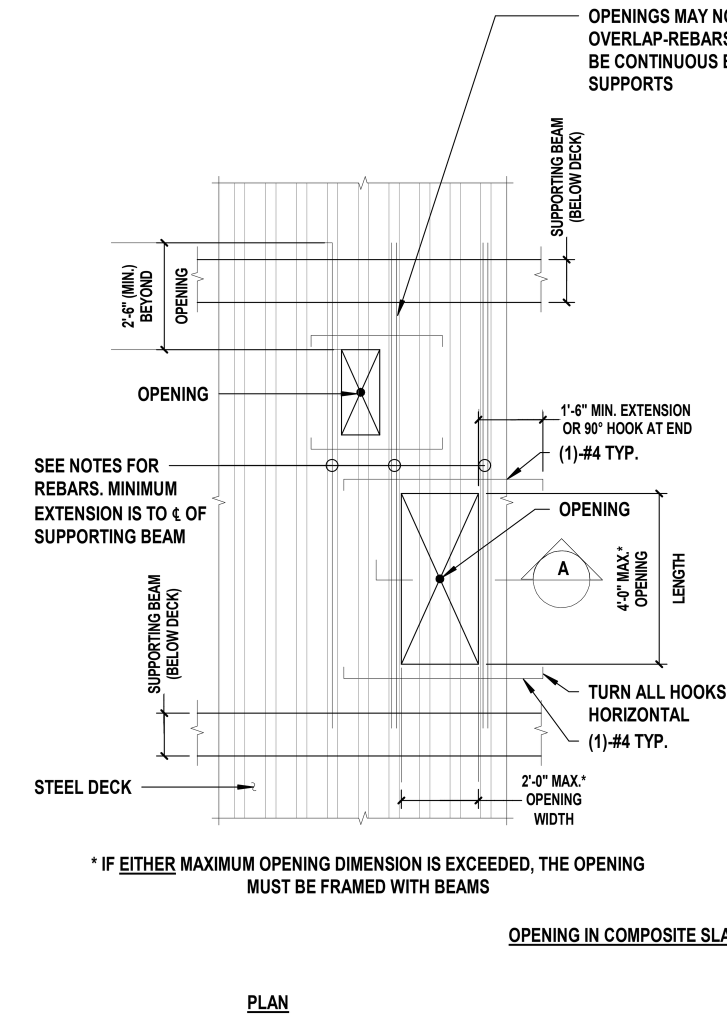

NOTES:
1. OPENINGS WHICH ARE DETERMINED BY THE CONTRACTOR TO BE REQUIRED BY JOB CONDITIONS, BUT WHICH ARE NOT SHOWN ON THE STRUCTURAL DRAWINGS, SHALL BE SUBMITTED TO THE ARCHITECT & STRUCTURAL ENGINEER FOR REVIEW & APPROVAL.
2. BLOCK OUT OPENING ON TOP OF DECK & RIBS.
3. DECK IS NOT TO BE CUT WHEN OPENINGS ARE BLOCK OUT.
4. PLACE REINFORCING BARS IN CONTINUOUS RIBS IMMEDIATELY ADJACENT TO OPENING & IN TOPPING SLAB PERPENDICULAR TO RIBS.
5. WHEN RIBS ARE SPACED @ 12" OR 8" ON CENTER, REINFORCING REQUIRED = (2)-#4 FOR EACH RIB PARTIALLY OR FULLY CUT, PLACE ONE HALF OF REBARS ON EACH SIDE OF OPENING, 2 BARS MAXIMUM PER RIB.
6. WHEN RIBS ARE SPACED @ 6" ON CENTER, REINFORCING REQUIRED = (1)-#4 (MINIMUM) FOR EACH RIB PARTIALLY OR FULLY CUT. ADD (1)-#4 IF AN ODD NUMBER OF RIBS IS CUT, PLACED ONE HALF OF REBARS ON EACH SIDE OF OPENING, ONE BAR PER RIB.
7. PROVIDE ADEQUATE CHAIRS & SPACERS TO HOLD REBAR SECURELY IN PLACE DURING PLACEMENT OF CONCRETE.
8. AFTER CONCRETE HAS BEEN PLACED & HAS ATTAINED @ LEAST 70 PERCENT OF ITS DESIGN STRENGTH, THE BLOCKOUTS MAY BE REMOVED & THE STEEL DECK MAY BE BURNED OUT @ THE EDGES OF THE OPENING.
9. FOR HOLES UP TO 6" DIAMETER OR 6"x6", REINFORCING WILL NOT BE REQUIRED.

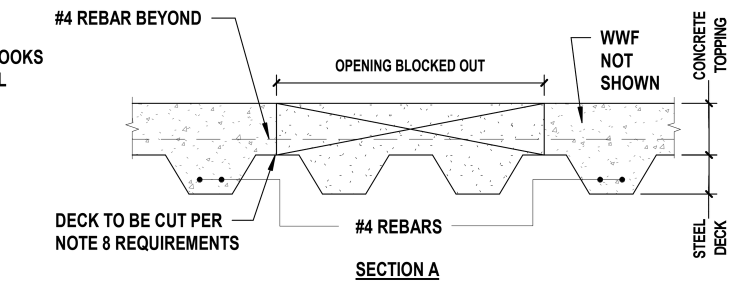

3 Opening in Composite Slab
SCALE: 3/4" = 1'-0"

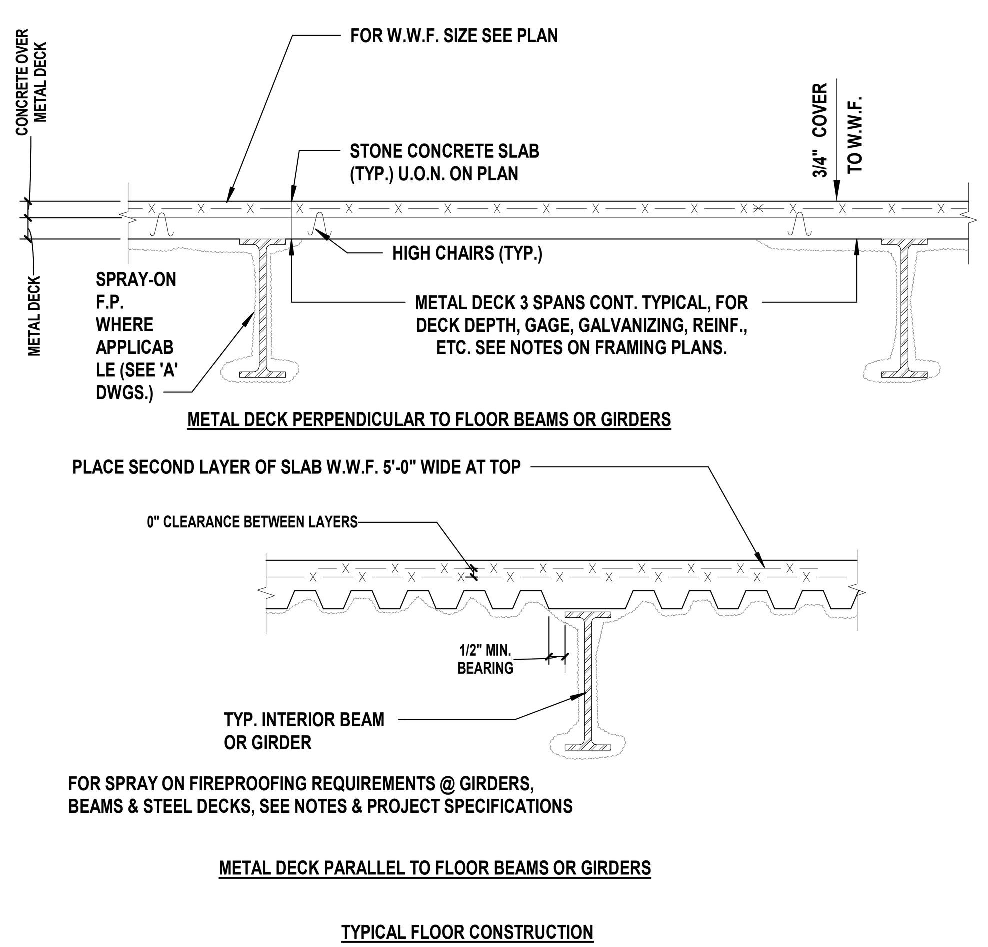

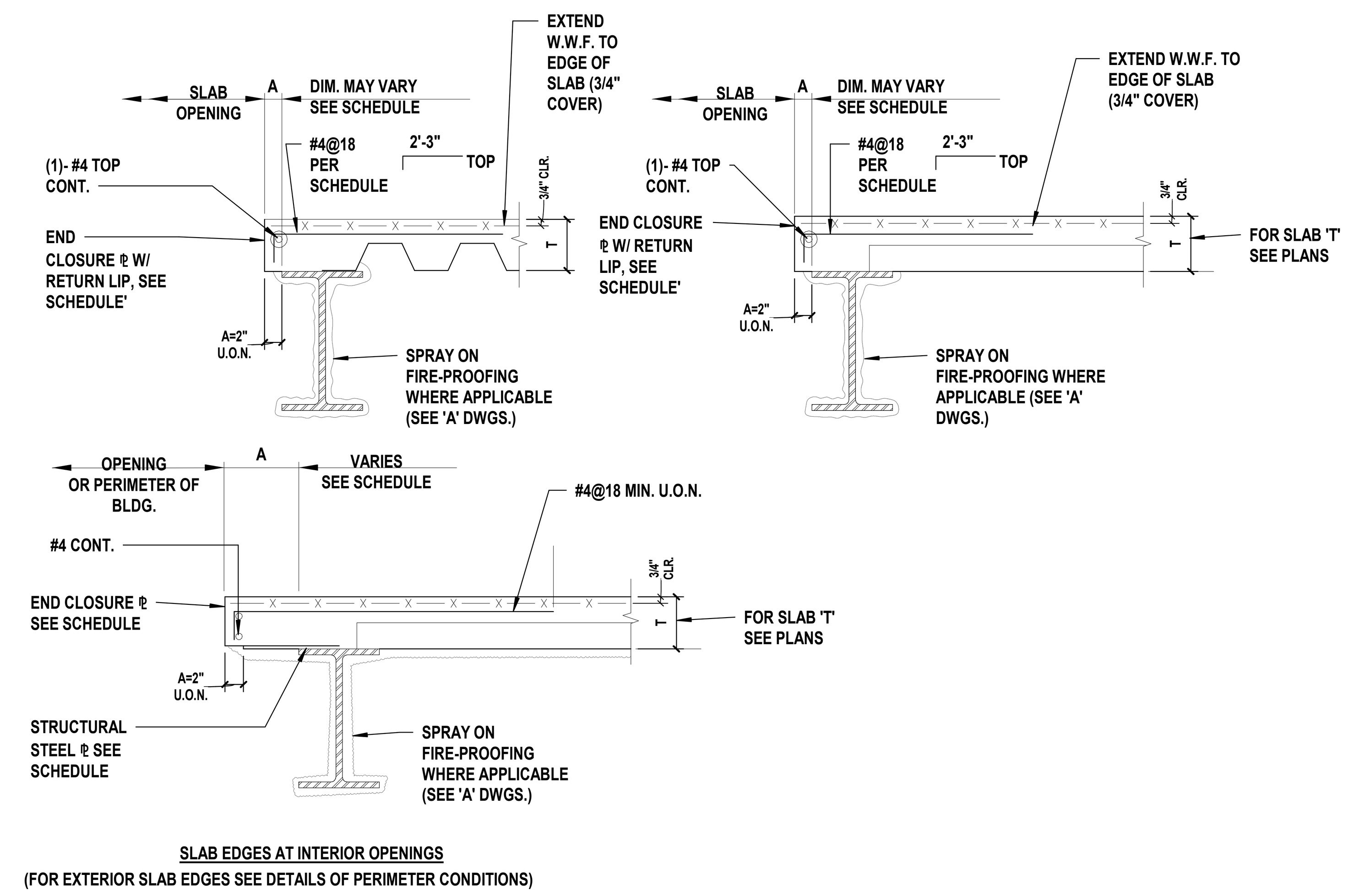

4 Slab Reinforcement Details
SCALE: 1" = 1'-0"

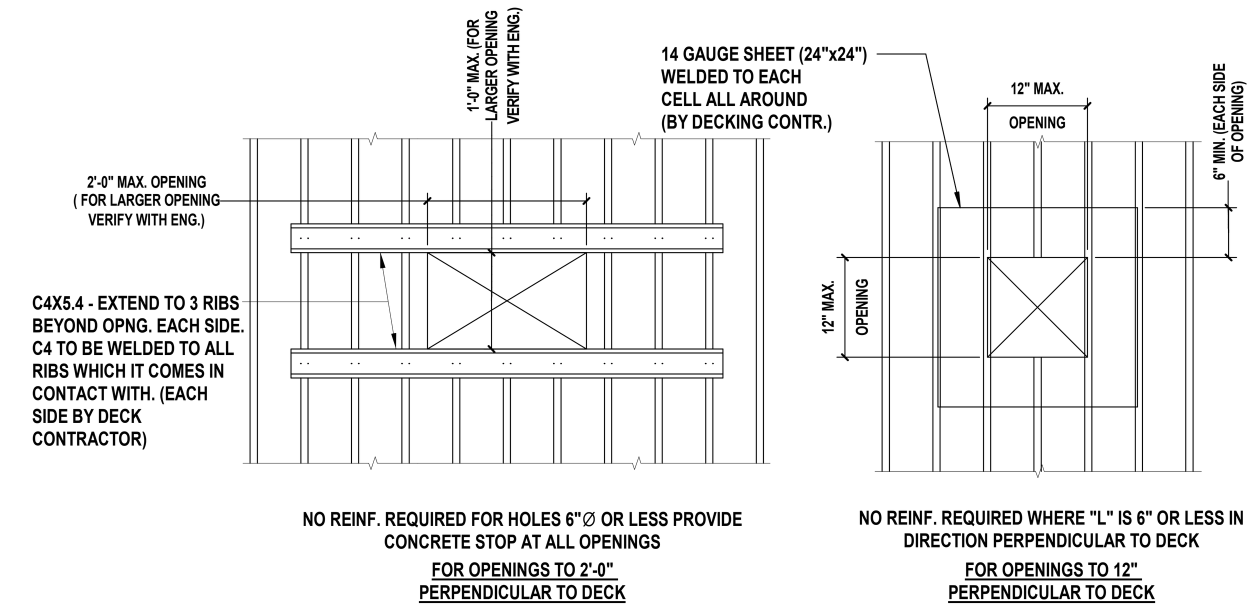

END CLOSURE PLATE SCHEDULE				
T= UP TO & INCLUDING 6 1/4"		T= OVER 6 1/4", UP TO & INCLUDING 8"		REMARKS
A	GAGE OF PLATE	A	GAGE OF PLATE	
UP TO 4"	14	UP TO 4"	12	--
OVER 4" TO 8"	12	OVER 4" TO 8"	10	FOR A=6" OR GREATER PROVIDE #4@18 TOP
OVER 8" TO 10"	10	OVER 8" TO 12"	1/4" THICK PLATE	PROVIDE #4@18 TOP
10" TO 12"	3/16" THICK PLATE			PROVIDE #4@18 TOP
12" TO 18"	1/4" THICK PLATE			PROVIDE #4@18 TOP

NOTES:
1. CLOSURE TO BEAR 2" ON FLANGE OF BEAM
2. WELD CLOSURE TO TOP FLANGE PER MANFACUTRER'S RECOMMENDATIONS.
3. PROVIDE RETURN LIP AT ALL VERTICAL LEGS, 1" FOR 10 GAGE, 3/4" FOR 12 GAGE, 1/2" FOR 14 GAGE.
4. IF 'A' EXCEEDS DIMENSIONS SHOWN ABOVE, REINFORCE POUR STOP WITH STIFFENERS OR SHORE UP THE EDGE OF SLAB DURING POUR.

TYPICAL FLOOR DETAILS @ OPENINGS

NOTES:
1. FOR OPENING SIZE & LOC. SEE 'A' + MEP DWGS
2. SPACING BETWEEN FLOOR OPENINGS SHOWN TO BE 3'-0" MIN. U.O.N.

5 Typical Floor Details at Openings
SCALE: 3/4" = 1'-0"

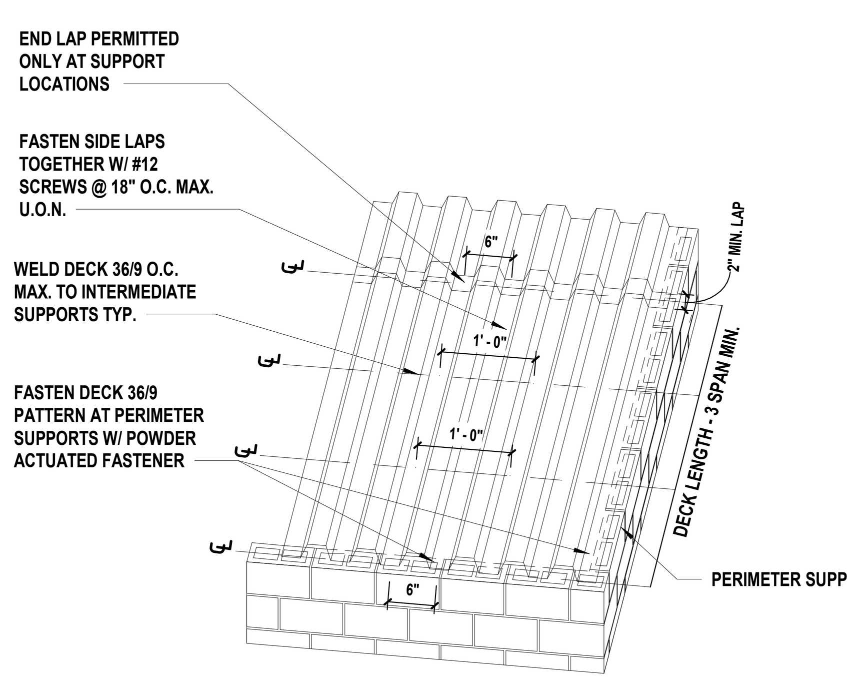

NOTE: ALL WELDS ARE 5/8" DIA. PUDDLE WELDS. WELDING WASHERS SHALL BE USED WHEN WELDING STELL DECK OF LESS THAN 22 GAUGE IN THICKNESS

6 Typical Roof Deck Detail
SCALE: N.T.S.

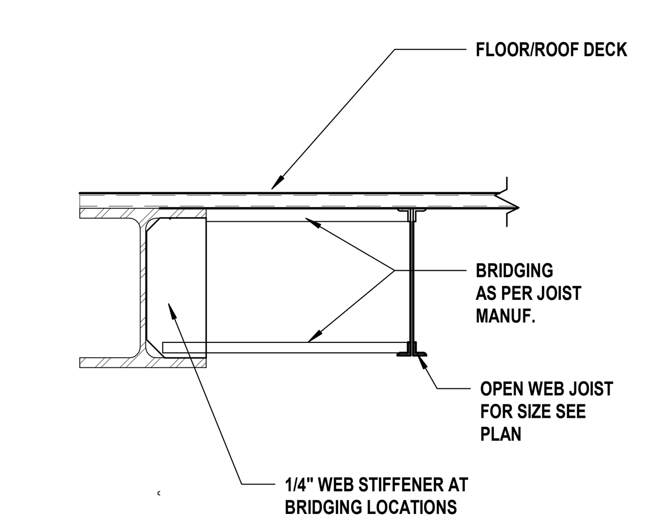

7 Joist Bridging at Spandrel Beam
SCALE: 1 1/2" = 1'-0"

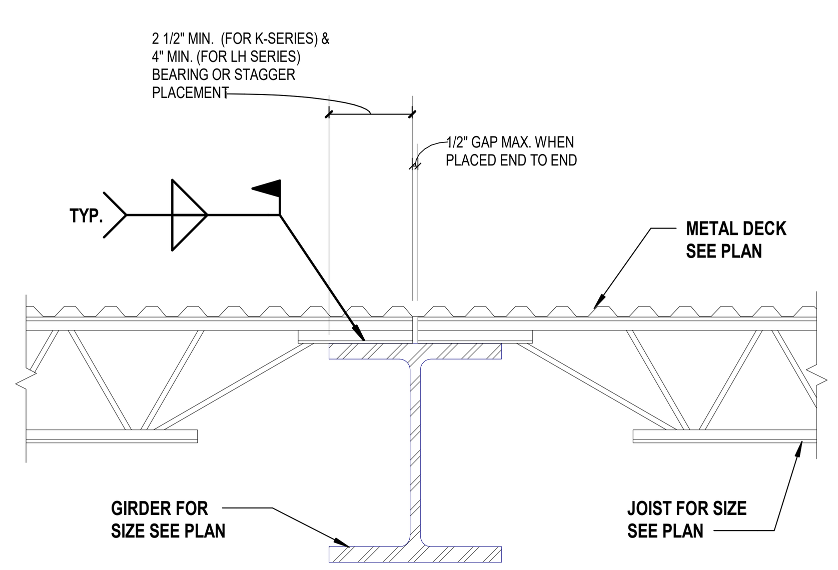

8 Joist Bearing On Steel Girder
SCALE:NTS

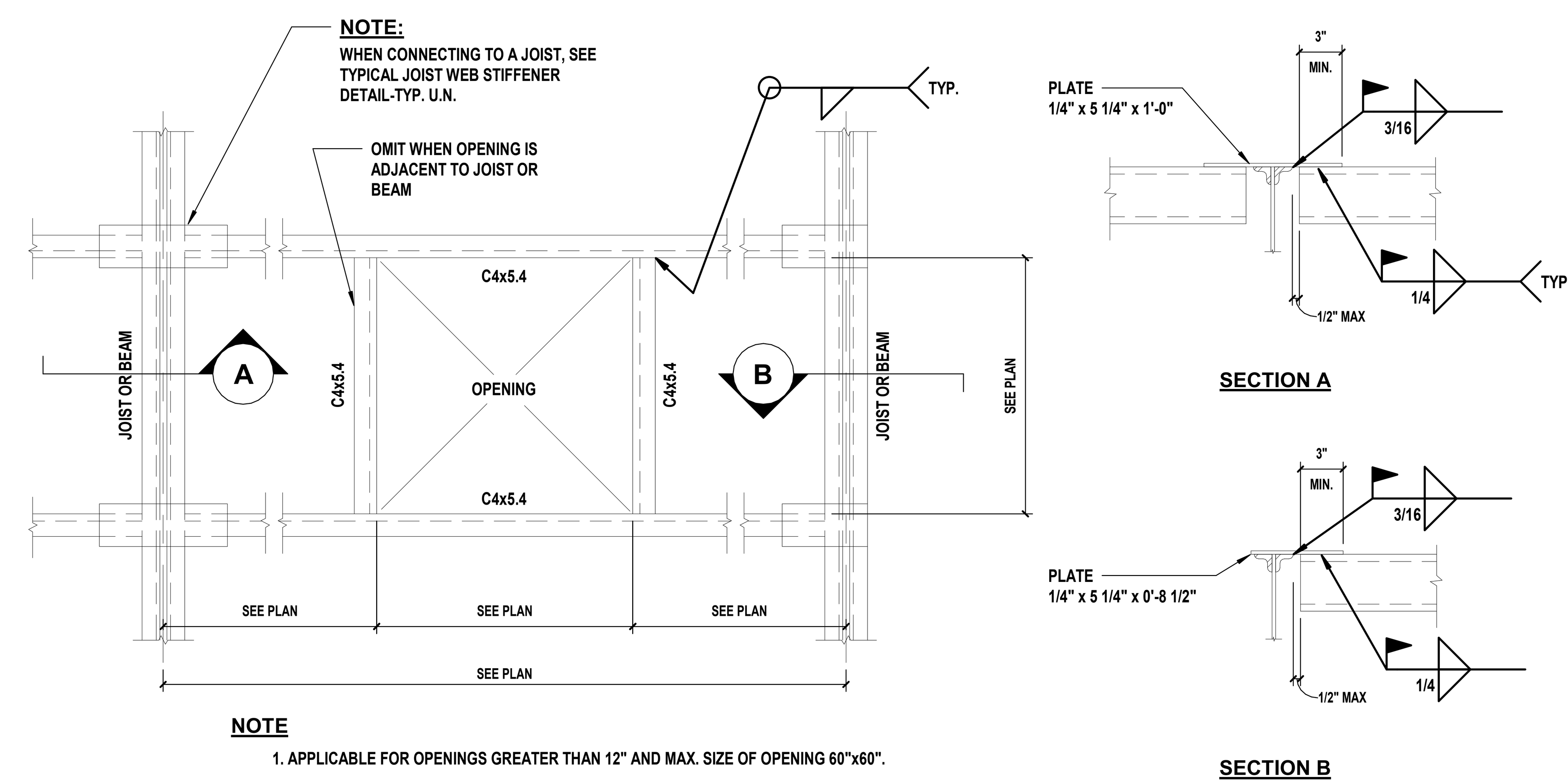

NOTE
1. APPLICABLE FOR OPENINGS GREATER THAN 12" AND MAX. SIZE OF OPENING 60"x60".
1. APPLICABLE ROOF TO UNITS LESS THAN 1000LBS.

9 Typical Framed Roof at RTU and Roof Openings
SCALE:NTS

H2M architects + engineers
538 Broad Hollow Road, 4th Floor East
Melville, NY 11747
631.756.8000 • www.h2m.com
Architecture & Landscape Architecture: No Certificate Required
Engineering Certificate of Authorization No.: 0018178

CONSULTANTS:

MARK	DATE	DESCRIPTION

STATE OF NEW YORK SCOTT D. LEHN 087145 LICENSED PROFESSIONAL ENGINEER
02/28/2027
Exp. Date
SCOTT D. LEHN, P.E.
NY PROFESSIONAL ENGINEER Lic. No. 087145
"ALTERATION OF THIS DOCUMENT EXCEPT BY A LICENSED PROFESSIONAL IS ILLEGAL"

DESIGNED BY:	DRAWN BY:	CHECKED BY:	REVIEWED BY:
TZY	TZY	SDL	SDL

PROJECT No:	DATE:	SCALE:
WPSD 2203	MARCH 2025	AS SHOWN

CLIENT
WHITE PLAINS CITY SCHOOL DISTRICT

ADDITION AT WHITE PLAINS HIGH SCHOOL

White Plains Public Schools WP REAL LIFE LEARNING

550 NORTH STREET, WHITE PLAINS, NY 10605

66-22-00-01-0-016-030

CONTRACT
CONTRACT G
GENERAL CONSTRUCTION

STATUS
FINAL BID DOCUMENTS

SHEET TITLE
METAL DECK DETAILS

DRAWING No.
S 530.00

C:\Users\tyehdego\Documents\WPSD2203_Central21_S_tyehdego.rvt
2/21/2025 5:16:39 PM

COLUMN SCHEDULE

COLUMN DESIGNATION	A							B										C						D		E						F					G						H		I					
	3	6	7	9	11	12A	13	3	5	6	7	8b	9	11	12A	13	14	6	6a	8c	9	13	14	12	13	3	6	6a	8a	9	12	1	3	6	8a	9	2	4	6	8	9	12	1	2	2	4	6	8	9	12
UPPER ROOF [36'-0"]																																																			
ROOF [28'-6"]																			+36'-4"		+36'-4"							+36'-4"		+36'-4"																					
FINISHED 1st FLOOR [15'-0"]	+28'-0"	+28'-0"	+28'-0"	+28'-0"	+28'-0"	+28'-0"		+28'-0"		+28'-0"	+28'-0"		+28'-0"	+28'-0"	+28'-0"	+28'-0"	+28'-0"		HSS8.625X0.5		HSS8.625X0.5	+28'-0"	+28'-0"	+28'-0"	+28'-0"	+28'-0"	HSS10.0X0.625	+28'-0"		HSS10.0X0.625	+28'-0"	+28'-0"	+28'-0"	+28'-0"	+28'-0"	+28'-0"	+28'-0"	+28'-0"	+28'-0"	+28'-0"	+28'-0"	+28'-0"	+28'-0"	+28'-4 1/2"	+28'-0"	+28'-0"	+28'-0"	+28'-0"	+28'-0"	+28'-0"	+28'-0"
GROUND FLOOR [0'-0"]	W10X45	W10X45	W10X49	W10X49	W10X45	W10X33	+14'-0" W10X33	W10X49	+14'-7" HSS8X8X5/8	W10X33	W10X49	+14'-7" HSS8X4X1/2	W10X60	W10X33	W10X39	W10X33	HSS8X8X3/8	+14'-7" W10X54	+14'-7"	+14'-7" W10X45	+14'-7"	HSS8X6X5/8	HSS8X8X1/2	W10X39	HSS8.625X0.5	W10X45	W10X45		HSS10.0X0.375		W10X33	W10X33	W10X33	W10X33	HSS10.0X0.625	HSS10.0X0.625	W10X33	W10X33	W10X33	W10X45	W10X45	W10X49	HSS10.0X0.5	W10X33	W10X33	W10X39	W10X39	W10X39	W10X45	W10X39
	[-0'-7 1/4"]	[-0'-11 1/4"]	[-0'-11 1/4"]	[-0'-11 1/4"]	[-0'-11 1/4"]	[-0'-11 1/4"]	[-0'-7 1/4"]	[-0'-7 1/4"]	[-0'-11 1/4"]	[-0'-11 1/4"]	[-0'-11 1/4"]	[-0'-11 1/4"]	[-0'-11 1/4"]	[-0'-11 1/4"]	[-0'-11 1/4"]	[-0'-7 1/4"]	[-3'-1 1/4"]	[-0'-11 1/4"]		[-0'-11 1/4"]		[-0'-7 1/4"]	[-3'-1 1/4"]	[-0'-7 1/4"]	[-0'-7 1/4"]	[-0'-7 1/4"]	[-0'-11 1/4"]	[-0'-11 1/4"]	[-0'-11 1/4"]	[-0'-11 1/4"]	[-0'-7 1/4"]	[-0'-7 1/4"]	[-0'-7 1/4"]	[-0'-11 1/4"]	[-0'-11 1/4"]	[-0'-11 1/4"]	[-0'-11 1/4"]	[-0'-11 1/4"]	[-0'-11 1/4"]	[-0'-11 1/4"]	[-0'-7 1/4"]	[-10'-11 1/4"]	[-0'-11 1/4"]	[-0'-7 1/4"]	[-0'-7 1/4"]	[-0'-7 1/4"]	[-0'-7 1/4"]	[-0'-7 1/4"]	[-0'-7 1/4"]
BASE PLATE TYPE	BP9	BP3	BP2	BP3	BP3	BP2	BP2	BP2	BP1	BP2	BP6B	BP1	BP3	BP3	BP6A	BP6A	BP7	BP6B	-	BP2	-	BP1	BP7	BP5A	BP2	BP3	BP5B	BP4	BP4	BP4	BP5A	BP2	BP2	BP3	BP8	BP8	BP5C	BP6B	BP2	BP3	BP3	BP2	BP4	BP5C	BP2	BP3	BP3	BP3	BP3	BP2

NOTES:

1. INDICATES TOP OF COLUMN/TOP PLATE
2. INDICATES BOTTOM OF BASE PLATE
3. '*' DESIGNATES A FIXED MOMENT COLUMN BASE PLATE
4. SEE BASE PLATE DETAIL AND SCHEDULE TO DETERMINE BOTTOM OF COLUMN ELEVATION.
5. SEE "FOOTING SCHEDULE" FOR FOOTING SIZE AND REINFORCING.
6. ALL BASE PLATES TO BEAR ON CONCRETE SHALL BE SHIMMED USING 3/4" NON-METALLIC, NON-SHRINK GROUT.

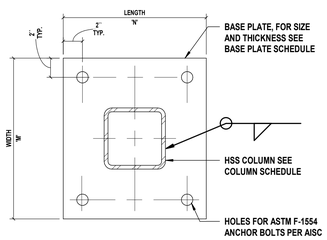

1 **Base Plate BP1**
SCALE: NTS

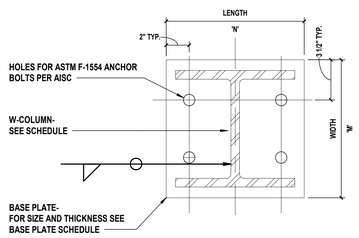

2 **Base Plate BP2 and BP3**
SCALE: NTS

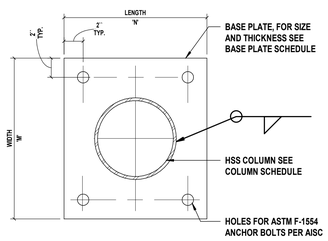

3 **Base Plate BP4**
SCALE: NTS

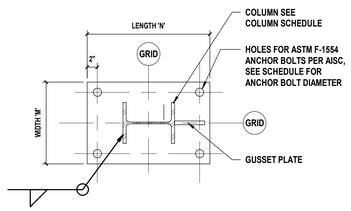

4 **Base Plate BP5A, BP5B, and BP5C**
SCALE:NTS

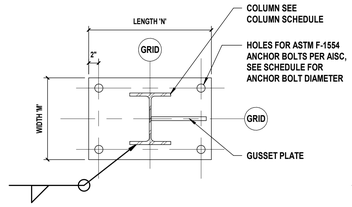

5 **Base Plate BP6A and BP6B**
SCALE: NTS

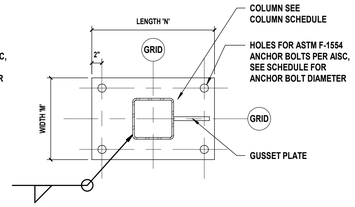

6 **Base Plate BP7**
SCALE: NTS

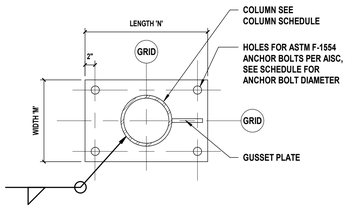

7 **Base Plate BP8**
SCALE: NTS

BASE PLATE SCHEDULE

MARK	WIDTH 'M'	LENGTH 'N'	THICKNESS	ANCHOR BOLT DIA.	MIN. EMBEDMENT
BP1	14"	10"	3/4"	3/4"	12"
BP2	13"	13"	3/4"	3/4"	12"
BP3	13"	13"	1"	3/4"	12"
BP4	14"	14"	1"	3/4"	12"
BP5A	14"	19"	1 1/4"	7/8"	16"
BP5B	17"	18"	1 1/4"	7/8"	16"
BP5C	14"	19"	3/4"	3/4"	16"
BP6A	16"	18"	1 1/4"	3/4"	16"
BP6B	16"	20"	1 1/4"	1"	16"
BP7	14"	16"	3/4"	3/4"	16"
BP8	16"	20"	1 1/4"	1"	16"

NOTES:

1. REFER TO BASE PLATE DETAIL FOR ANCHOR BOLT LOCATIONS.

8 **Base Plate Schedule**
SCALE: 1" = 1'-0"

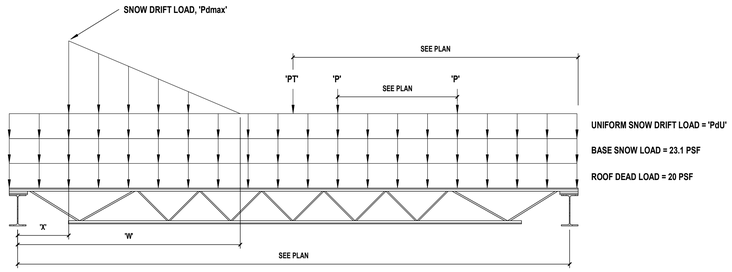

NOTES:

1. LOADS PRESENT ON ALL JOISTS, SEE ROOF FRAMING PLAN FOR LOCATIONS
2. REFER TO JOIST LOAD TABLE FOR THE SNOW DRIFT LOADING PRESENT AT EACH DESIGNATED JOIST.

SPECIAL JOIST LOADING INFO

JOIST DESIGNATION	'X'	'W'	'Pdmax'	'PdU'	'P'	'PT'
SP-1	-	-	-	54.48 PSF	-	-
SP-2	1.25ft	10 FT	65.9 PSF	23.10PSF	1400LB	520 LB
SP-3	SEE PLAN	7 FT	54.48 PSF	23.10 PSF	450 LBS POINT LOAD @ HVAC EQ'T (1500 LB TOTAL	-
SP-4	SEE PLAN	7	54.48 PSF	23.10 PSF	800LBS POINT LOAD @ HVAC EQ'T (6280 LB TOTAL)	-
SP-5	-	16.8 FT	98.31 PSF	23.10 PSF	-	-

9 **Joist Loading Diagram**
SCALE: N.T.S.

H2M architects + engineers
538 Broad Hollow Road, 4th Floor East
Melville, NY 11747
631.756.8000 • www.h2m.com
Architecture & Landscape Architecture: No Certificate Required
Engineering Certificate of Authorization No.: 0018178

CONSULTANTS:

MARK	DATE	DESCRIPTION

STATE OF NEW YORK · SCOTT D. LEHN · 087145 · LICENSED PROFESSIONAL ENGINEER

SCOTT D. LEHN, P.E.
NY PROFESSIONAL ENGINEER Lic. No. 087145

02/25/2027 Exp. Date

"ALTERATION OF THIS DOCUMENT EXCEPT BY A LICENSED PROFESSIONAL IS A VIOLATION OF THE NEW YORK STATE EDUCATION LAW"

DESIGNED BY:	DRAWN BY:	CHECKED BY:	REVIEWED BY:
TZY/JRI	JRI/JS	SDL	SDL
PROJECT No: WPSD 2203	DATE: MARCH 2025	SCALE: AS SHOWN	

CLIENT

WHITE PLAINS CITY SCHOOL DISTRICT

ADDITION AT WHITE PLAINS HIGH SCHOOL

550 NORTH STREET, WHITE PLAINS, NY 10605

66-22-00-01-0-016-030

CONTRACT

CONTRACT G
GENERAL CONSTRUCTION

STATUS

FINAL BID DOCUMENTS

SHEET TITLE

STRUCTURAL BUILDING COLUMN SCHEDULE AND DETAILS

DRAWING No.

S 600.00

C:\Users\dylhalgor\Documents\WPSD2203_Central21_S_jrahlogo.rvt
2/21/2025 5:16:40 PM

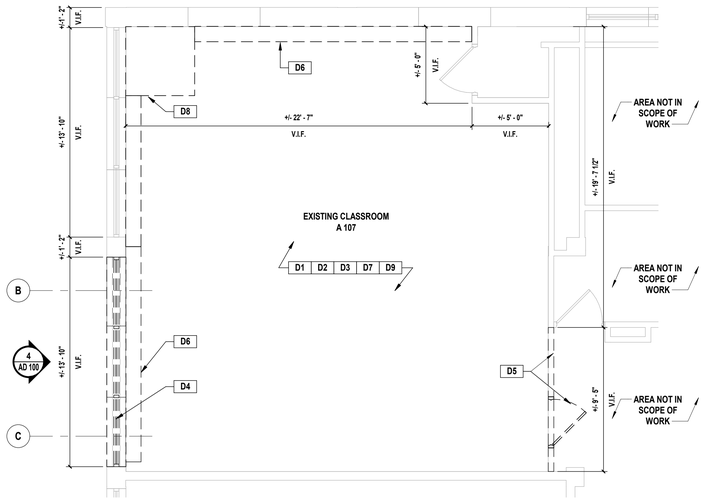

1 **Partial First Floor Demolition Plan**
SCALE: 1/4" = 1'-0"

GENERAL DEMOLITION NOTES

1. PERFORM ALL DEMOLITION AS REQUIRED TO COMPLETE WORK.
2. THE CONTRACTOR SHALL OBEY ALL CODES, STATUES AND LAWS AS APPLICABLE TO DEMOLITION WORK IN AN OCCUPIED BUILDING AND FOR REMOVAL OF MATERIALS SAFELY FROM THE SITE.
3. THE SCHOOL DISTRICT SHALL REMOVE EXISTING EQUIPMENT, POSTERS, SECURITY SYSTEMS AND ALL SIMILAR ITEMS WHICH WILL BE SALVAGED FROM DEMOLITION AREA PRIOR TO THE START OF CONSTRUCTION.
4. CONTRACTOR SHALL REMOVE ALL ITEMS THAT WILL BE ABANDONED AS A RESULT OF THE WORK BEING PERFORMED.
5. CONTRACTOR SHALL DISPOSE OF ALL UNWANTED MATERIALS AND CONSTRUCTION DEBRIS OFF SITE IN ACCORDANCE WITH CONTRACT REQUIREMENTS.
6. CONTRACTOR TO COORDINATE THE EXACT LOCATION OF DUMPSTER, AND MATERIALS STORED ON SITE WITH SCHOOL DISTRICT.
7. COORDINATE THE DEMOLITION OF MECHANICAL, PLUMBING AND ELECTRICAL ITEMS WITH 'H', 'P', AND 'E' DRAWINGS.
8. OVER DEMOLITION SHALL BE ALLOWED PROVIDED THAT ALL SURFACES SHALL BE REBUILT TO MATCH MATERIALS, STRUCTURAL INTEGRITY AND APPEARANCE OF THOSE WHICH WERE REMOVED IN CONFORMANCE WITH CONTRACT DOCUMENTS AND AT NO ADDITIONAL COST TO THE DISTRICT.
9. THE CONTRACTOR IS REQUIRED TO PROTECT ALL EXISTING EQUIPMENT AND FINISHES INCLUDING BUT NOT LIMITED TO EXISTING MECHANICAL, PLUMBING AND ELECTRICAL.
10. BUILDING DIMENSIONS ARE APPROXIMATE. THE CONTRACTOR SHALL FIELD VERIFY ALL DIMENSIONS FOR QUANTITY TAKE OFFS AND FABRICATION OF MATERIALS.
11. THE CONTRACTOR SHALL PROTECT ALL PORTIONS OF THE EXISTING BUILDING FROM DUST, WEATHER INCLEMENCY AND FREEZING TO PREVENT DAMAGE TO THE EXISTING STRUCTURE OR BUILDING CONTENTS.
12. CONTRACTOR SHALL REMOVE, MAINTAIN, AND REINSTALL ALL DOORS SCHEDULED TO REMAIN IN ORDER TO COMPLETE SCOPE OF WORK.

DEMOLITION KEYNOTES

NOTE	SCOPE OF WORK
D1	CONTRACTOR SHALL COMPLETELY REMOVE AND LEGALLY DISPOSE OF THE EXISTING CEILING LIGHTING SYSTEM IN ITS ENTIRETY WHERE INDICATED.
D2	CONTRACTOR SHALL COMPLETELY REMOVE AND LEGALLY DISPOSE OF EXISTING VCT FLOORING IN ITS ENTIRETY. REMOVALS SHALL INCLUDE BUT NOT BE LIMITED TO ALL SUBSTRATE MATERIAL DOWN TO THE EXISTING STRUCTURAL CONCRETE FLOOR SLAB. THE CONTRACTOR SHALL BE RESPONSIBLE FOR INSPECTING THE CONDITION OF THE SLAB. PATCH AND LEVEL AS NEEDED TO ENSURE A LEVEL FLOOR FREE OF DIPS, WAVES AND DEPRESSIONS, TELEGRAPHING OF THE LEVELING COMPOUND AND IMPERFECTIONS IN THE SLAB. PROVIDE SELF-LEVELING COMPOUND AS REQUIRED FOR FINISHED FLOOR TO ALIGN WITH CORRIDOR FLOOR. REFER TO ASBESTOS ABATEMENT NOTES, THIS DRAWINGS FOR ADDITIONAL INFORMATION.
D3	CONTRACTOR SHALL PREPARE EXISTING CONCRETE FLOORING AS NECESSARY TO ACCOMMODATE NEW FLOOR FINISH, REFER TO FINISH SCHEDULE FOR ADDITIONAL INFORMATION.
D4	CONTRACTOR SHALL COMPLETELY REMOVE AND LEGALLY DISPOSE OF EXISTING WINDOW, WALL, AND ALL ASSOCIATED CONSTRUCTION IN THEIR ENTIRETY AS INDICATED, INCLUDING BUT NOT BE LIMITED TO WINDOW, FRAME, SILL, JAMB, GLAZING, HARDWARE, STUD FRAME KNEE WALL, INSULATED GLAZING PANEL SYSTEM AND ALL DEVICES USED TO SECURE THE WINDOW IN PLACE. EXISTING WINDOW TRIM SILL SCHEDULED TO BE REMOVED UNLESS OTHERWISE. PROVIDE WEATHER TIGHT PLYWOOD ENCLOSURES FOR ALL BUILDING OPENINGS AS REQUIRED TO MAINTAIN BUILDING WEATHER TIGHT FOR THE ENTIRE DURATION OF PROJECT. CONTRACTOR SHALL REMOVE STONE FACADE PANELS, WINDOW SHADES, RADIATOR, AND TURN IT OVER TO THE DISTRICT.
D5	CONTRACTOR SHALL COMPLETELY REMOVE AND LEGALLY DISPOSE OF EXISTING GLASS WALL, DOOR, AND ALL ASSOCIATED CONSTRUCTION IN ITS ENTIRETY AS INDICATED, INCLUDING BUT NOT BE LIMITED TO DOOR, FRAME, SILL, JAMB, GLAZING, INSULATED GLAZING PANEL SYSTEM AND ALL DEVICES USED TO SECURE THE WALL AND DOOR IN PLACE. CONTRACTOR SHALL REMOVE DOOR HARDWARE, LOCKSETS, AND TURN IT OVER TO THE DISTRICT.
D6	CONTRACTOR SHALL COMPLETELY CUT BACK/ REMOVE AND DISPOSE OF EXISTING RADIATORS AND COVERS AS NECESSARY TO ACCOMODATE NEW WALL CONSTRUCTION AND FINISHES BY CONTRACT 'M'. SEE 'M'DRAWINGS FOR ADDITIONAL INFORMATION.
D7	CONTRACTOR SHALL REMOVE AND TURN OVER THE FURNITURE IN CLASSROOM TO OWNER.
D8	CONTRACTOR SHALL DISCONNECT AND REMOVE EXISTING MECHANICAL EQUIPMENT, EXISTING DUCT WORK, AND TURN IT OVER TO THE DISTRICT.
D9	ELECTRICAL CONDUIT, WIRING, OUTLETS, AND ASSOCIATED WALL MOUNTED EQUIPMENT TO BE REMOVED AND DIPOSED OF BY CONTRACT 'E'.
D10	EXISTING UNIT VENTILATOR, RADIATORS, COVERS AND ALL ASSOCIATED ITEMS TO BE REMOVED AND REINSTALLED BY CONTRACT 'M'.

DEMOLITION PLAN LEGEND

	INDICATES WALL TO BE REMOVED AND DISPOSED OF
	INDICATES EXISTING DOOR AND DOOR FRAME TO BE REMOVED AND DISPOSED OF
	EXISTING WALL TO REMAIN
	EXISTING WINDOW, WINDOW FRAME & ASSOCIATED HARDWARE TO REMAIN
	EXISTING WINDOW, WINDOW FRAME & ASSOCIATED HARDWARE TO BE REMOVED AND DISPOSED OF

Interior View of Classroom A107

2 **Partial Second Floor Demolition Plan**
SCALE: 1/4" = 1'-0"

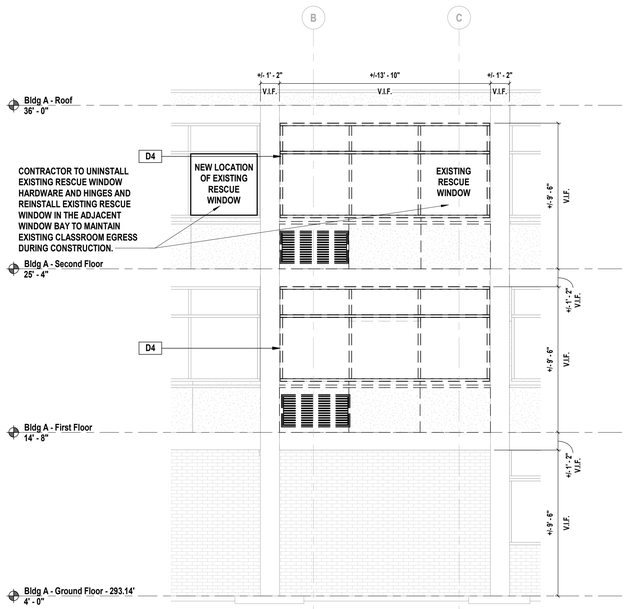

4 **Partial Demolition North Elevation At Existing Classrooms A107 & A207**
SCALE: 1/4" = 1'-0"

Interior View of Classroom A207

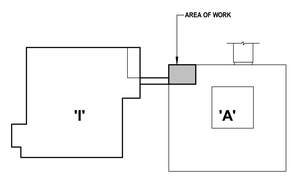

Key Plan
Scale: N.T.S.

H2M architects + engineers
538 Broad Hollow Road, 4th Floor East
Melville, NY 11747
631.756.8000 • www.h2m.com
Architecture & Landscape Architecture: No Certificate Required
Engineering Certificate of Authorization No.: 0018178

CONSULTANTS:

MARK	DATE	DESCRIPTION

REGISTERED ARCHITECT KEVIN MICHAEL MEDLER STATE OF NEW YORK 038379

KEVIN M. MEDLER, R.A.
NY PROFESSIONAL ARCHITECT Lic. No. 038379
THE TRANSFERABILITY AND ACCURACY OF DATA IS CLEARLY PROFESSIONAL IN CLASS.

DESIGNED BY:	DRAWN BY:	CHECKED BY:	REVIEWED BY:
CWP	DOD/NPO	CWP/KMM	
PROJECT No: WPSD 2203	DATE: MARCH 2025	SCALE: AS SHOWN	

CLIENT
WHITE PLAINS CITY SCHOOL DISTRICT

ADDITION AT WHITE PLAINS HIGH SCHOOL

550 NORTH STREET, WHITE PLAINS, NY 10605

66-22-00-01-0-016-030

CONTRACT
CONTRACT G
GENERAL CONSTRUCTION

STATUS
FINAL BID SET

SHEET TITLE
DEMOLITION FIRST FLOOR CLASSROOM, NOTES, AND LEGENDS

DRAWING No.
AD 100.00

C:\Users\ddesouza\Documents\WPSD2203_Central21_A_DDdSouzaDETUB.rvt
3/6/2025 2:52:33 PM

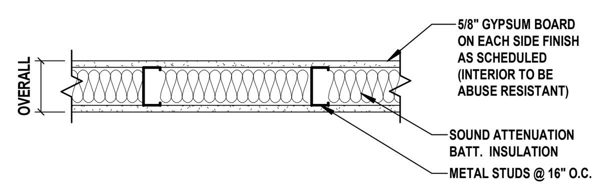

WALL TYPE	OVERALL DIMENSIONS	STUD SIZE	FIRE RATING	UL No.	STC RATING	COMMENTS
1A	5 1/4"	4"	-	-	-	INSTALLED TO UNDERSIDE OF DECK
1B	5 1/4"	4	-	-	-	-
-	-	-	-	-	-	-

1 Metal Stud Partition
Interior Partition — H2M Ref # MI-131

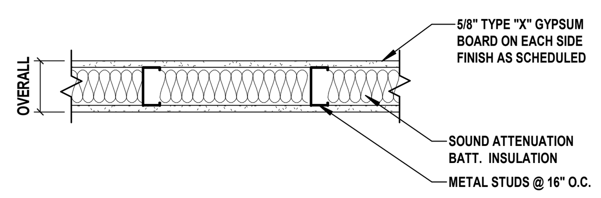

WALL TYPE	OVERALL DIMENSIONS	STUD SIZE	FIRE RATING	UL No.	STC RATING	COMMENTS
2A	5 1/4"	4"	1 HR	U419	49	INSTALLED TO UNDERSIDE OF DECK
2B	4 5/8"	4"	1 HR	U493	58	GYPSUM BOARD ON ONE SIDE
-	-	-	-	-	-	-

2 1 HR Metal Stud Partition
Interior Partition — H2M Ref # MI-132

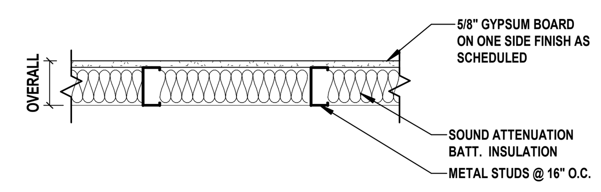

WALL TYPE	OVERALL DIMENSIONS	STUD SIZE	FIRE RATING	UL No.	STC RATING	COMMENTS
3A	3 1/8"	2 1/2"	-	-	-	-
3B	4 5/8"	4"	-	-	-	INSTALLED TO UNDERSIDE OF DECK
-	-	-	-	-	-	-

3 Metal Stud Partition
Interior Partition — H2M Ref # MI-131

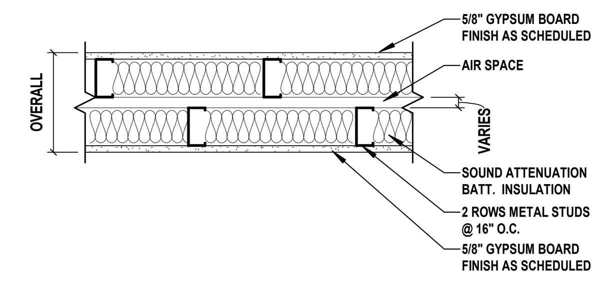

WALL TYPE	OVERALL DIMENSIONS	STUD SIZE	FIRE RATING	UL No.	STC RATING	COMMENTS
4A	VAIRES	4"	-	-	-	SEE ENLARGED FLOOR PLAN
-	-	-	-	-	-	-
-	-	-	-	-	-	-

4 Metal Stud Double Wall
Interior Partition — H2M Ref # MI-136

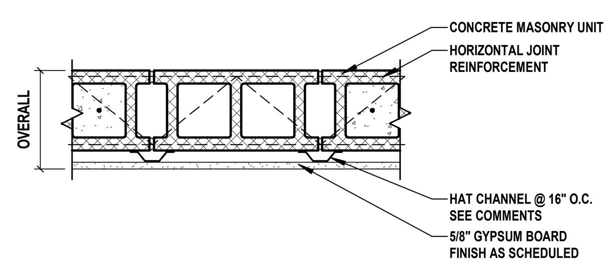

WALL TYPE	OVERALL DIMENSIONS	CMU SIZE	FIRE RATING	UL No.	STC RATING	COMMENTS
5A	9 1/8"	7 5/8"	-	-	-	7/8" HAT CHANNEL
-	-	-	-	-	-	-
-	-	-	-	-	-	-

5 CMU w/ Hat Channel
Interior Partition — H2M Ref # CI-102

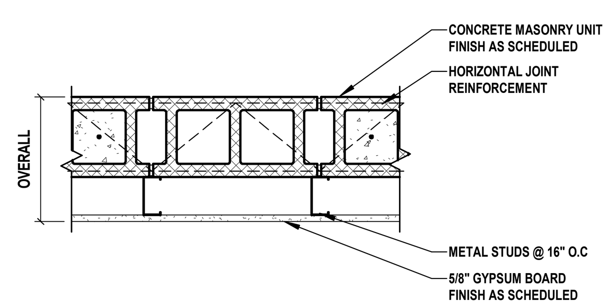

WALL TYPE	OVERALL DIMENSIONS	CMU SIZE	STUD SIZE	FIRE RATING	UL No.	STC RATING	COMMENTS
6A	0'-10 3/4"	7 5/8"	2 1/2"	-	-	-	-
6B	1'-0 1/4"	7 5/8"	4"	-	-	-	-
-	-	-	-	-	-	-	-

6 CMU w/ Metal Stud
Interior Partition

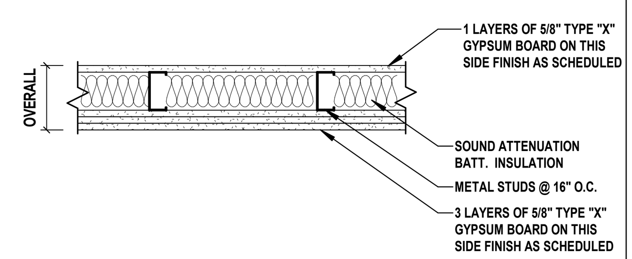

WALL TYPE	OVERALL DIMENSIONS	STUD SIZE	FIRE RATING	UL No.	STC RATING	COMMENTS
7	6 1/2"	4"	2 HR	U408	53	INSTALLED TO UNDERSIDE OF DECK
-	-	-	-	-	-	-
-	-	-	-	-	-	-

7 2 HR Metal Stud Partition
Interior Partition

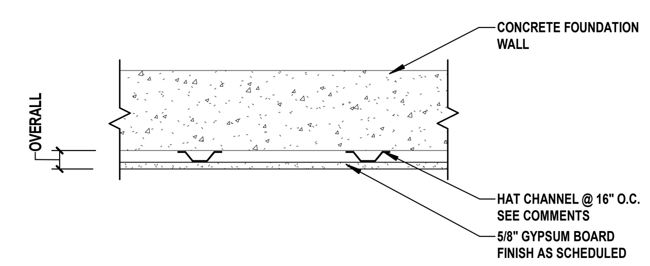

WALL TYPE	OVERALL DIMENSIONS	CMU SIZE	FIRE RATING	UL No.	STC RATING	COMMENTS
8	1 7/8"	7/8"	-	-	-	7/8" HAT CHANNEL
-	-	-	-	-	-	-
-	-	-	-	-	-	-

8 Basement Wall
Interior Partition

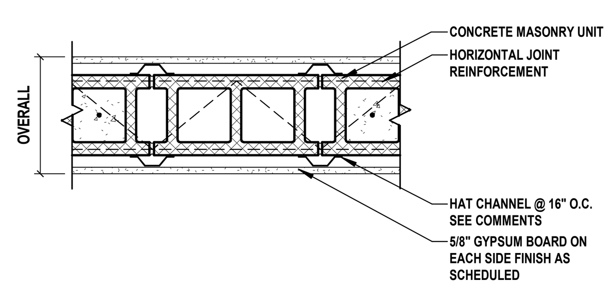

WALL TYPE	OVERALL DIMENSIONS	CMU SIZE	FIRE RATING	UL No.	STC RATING	COMMENTS
9	1'- 2 5/8"	11 5/8"	2 HR	-	-	7/8" HAT CHANNEL
-	-	-	-	-	-	-
-	-	-	-	-	-	-

9 2 HR CMU w/ Hat Channel
Interior Partition — H2M Ref # CI-102

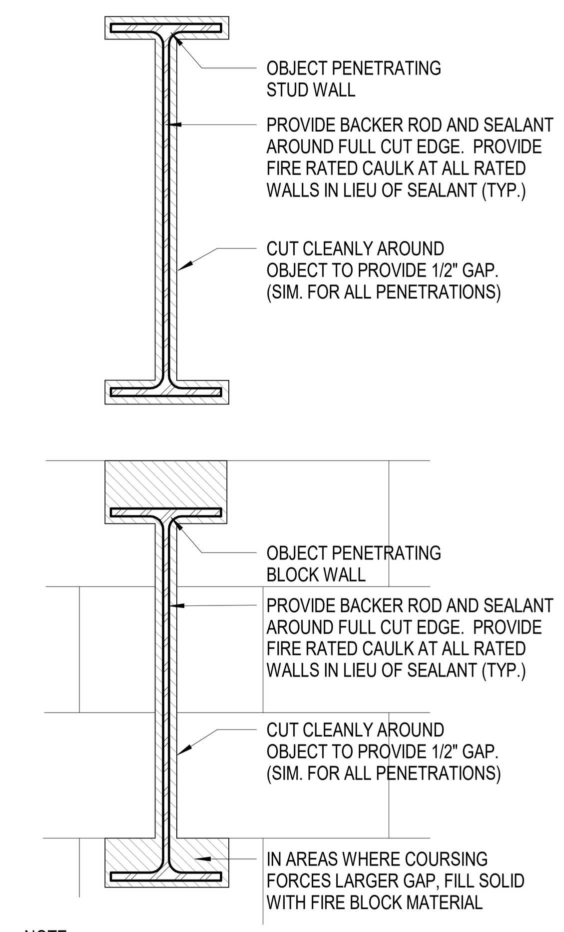

NOTE:
THESE DETAILS APPLY TO ALL PENETRATING ITEMS INCLUDING BEAMS, JOISTS, ANGLES, DUCTS, PIPES, CONDUIT, ETC. BEAMS ARE SHOWN FOR ILLUSTRATIVE PURPOSES ONLY.

TYPICAL HORIZONTAL PENETRATIONS AT WALLS

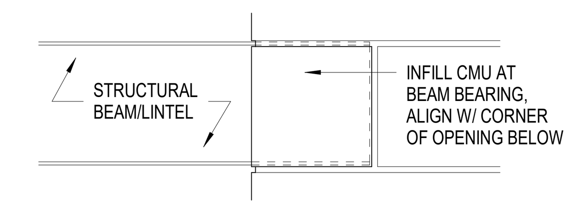

TYPICAL INFILL AT EXPOSED BEAM/ LINTEL BEARING

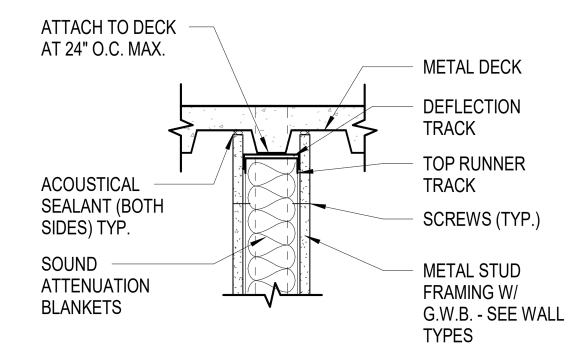

TYPICAL TOP OF WALL STUD FRAMING TO UNDERSIDE OF FLOOR OR ROOF DECKING WITH SOUND ATTENUATION BLANKETS

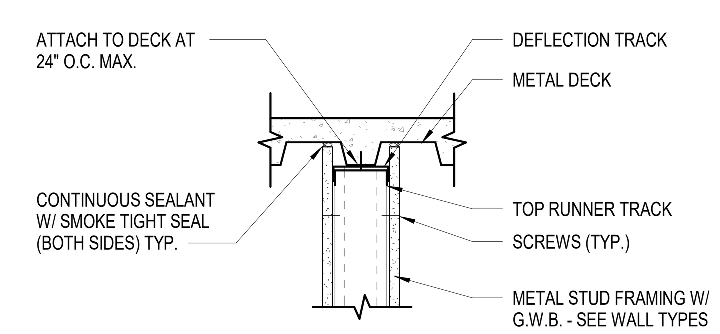

TYPICAL TOP OF STUD WALL FRAMING TO UNDERSIDE OF FLOOR OR ROOF DECKING @ NON-RATED PARTITIONS

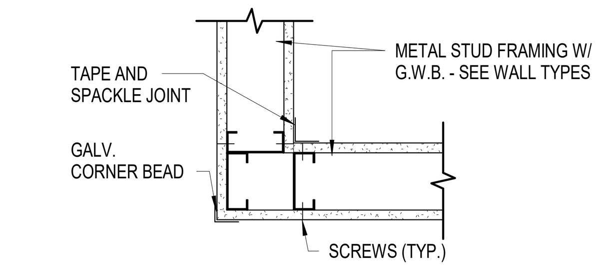

NOTE:
TYPICAL CORNER DETAIL OCCURS AT THE FOLLOWING LOCATIONS:
1. INTERSECTION AT NON-RATED PARTITIONS.
2. INTERSECTION AT RATED PARTITIONS.

TYPICAL STUD WALL CORNER DETAIL

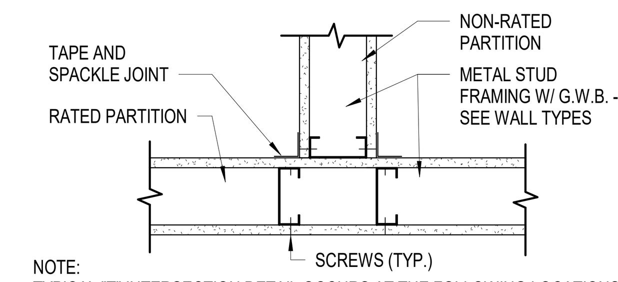

NOTE:
TYPICAL "T" INTERSECTION DETAIL OCCURS AT THE FOLLOWING LOCATIONS:
1. INTERSECTION AT A NON-RATED PARTITION AND A RATED PARTITION.

TYPICAL STUD WALL INTERSECTION @ A RATED PARTITION

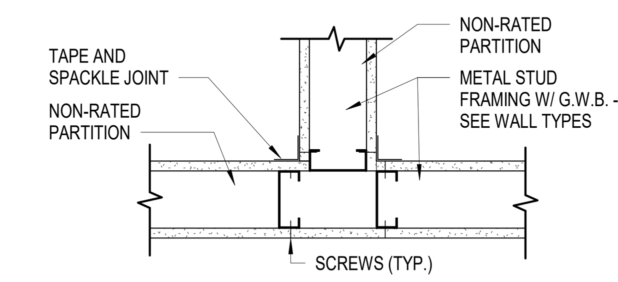

TYPICAL STUD WALL INTERSECTION @ NON-RATED PARTITIONS

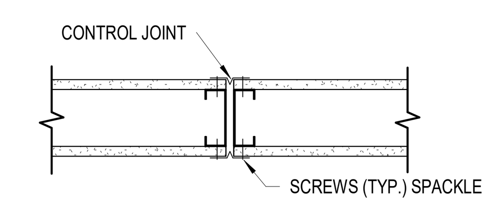

TYPICAL CONTROL JOINT @ STUD WALL

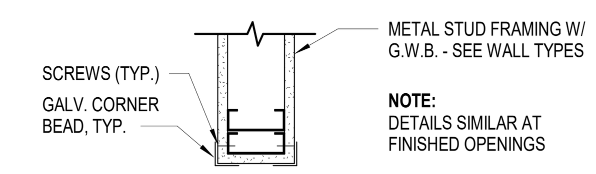

NOTE:
DETAILS SIMILAR AT FINISHED OPENINGS

TYPICAL STUD WALL END CONDITION

GENERAL PARTITION NOTES

1. ALL METAL STUD PARTITIONS NOT PART OF A FIRE RATED ENCLOSURE SHALL EXTEND METAL STUDS TO DECK ABOVE AND GYPSUM BOARD TO A HEIGHT OF 6" ABOVE THE FINISHED CEILING U.N.O.
2. ALL METAL STUD PARTITIONS THAT ARE PART OF A FIRE RATED ENCLOSURE SHALL EXTEND FULL HEIGHT FROM FLOOR TO DECK ABOVE U.N.O.
3. REFER TO CODE PLAN FOR LOCATIONS OF FIRE RATED WALLS.
4. MOISTURE RESISTANT GYPSUM WALL BOARD TO BE INSTALLED IN KITCHEN, BASEMENT, AND TOILET ROOMS.
5. TILE BACKER BOARD TO BE INSTALLED BEHIND ALL TILED WALLS, SEE FINISH SCHEDULE FOR ADDITIONAL INFORMATION.

HATCH LEGEND

BATT INSULATION	GYP. BOARD OR GYP. SHEATHING	MASONRY VENEER	RIGID INSULATION
(DIMENSIONAL LUMBER) ROUGH WOOD BLOCKING	FINISH WOOD	CONCRETE MASONRY UNIT	UNDISTURBED SOIL/EARTH
SHIM	CONCRETE	GRANULAR FILL/SUBBASE	GROUT
PLYWOOD	BACK FILL	STEEL	

H2M architects + engineers
538 Broad Hollow Road, 4th Floor East
Melville, NY 11747
631.756.8000 ▪ www.h2m.com
Architecture & Landscape Architecture: No Certificate Required
Engineering Certificate of Authorization No.: 0018178

CONSULTANTS:

MARK	DATE	DESCRIPTION

07/31/2024 Exp. Date
KEVIN M. MEDLER, R.A.
NY PROFESSIONAL ARCHITECT Lic. No. 038379
"ALTERATION OF THIS DOCUMENT EXCEPT BY A LICENSED PROFESSIONAL IS ILLEGAL"

DESIGNED BY:	DRAWN BY:	CHECKED BY:	REVIEWED BY:
CWP	DOD/NPO	CWP/KMM	

PROJECT No:	DATE:	SCALE:
WPSD 2203	MARCH 2025	AS SHOWN

CLIENT
WHITE PLAINS CITY SCHOOL DISTRICT

ADDITION AT WHITE PLAINS HIGH SCHOOL

550 NORTH STREET, WHITE PLAINS, NY 10605

66-22-00-01-0-016-030

CONTRACT
CONTRACT G
GENERAL CONSTRUCTION

STATUS
FINAL BID SET

SHEET TITLE
PARTITION TYPES, DETAILS, NOTES, AND LEGEND

DRAWING No.
A 000.00

C:\Users\ddesouza\Documents\WPSD2203_Central21_A_DDeSouzaD8TU8.rvt
3/6/2025 2:45:59 PM

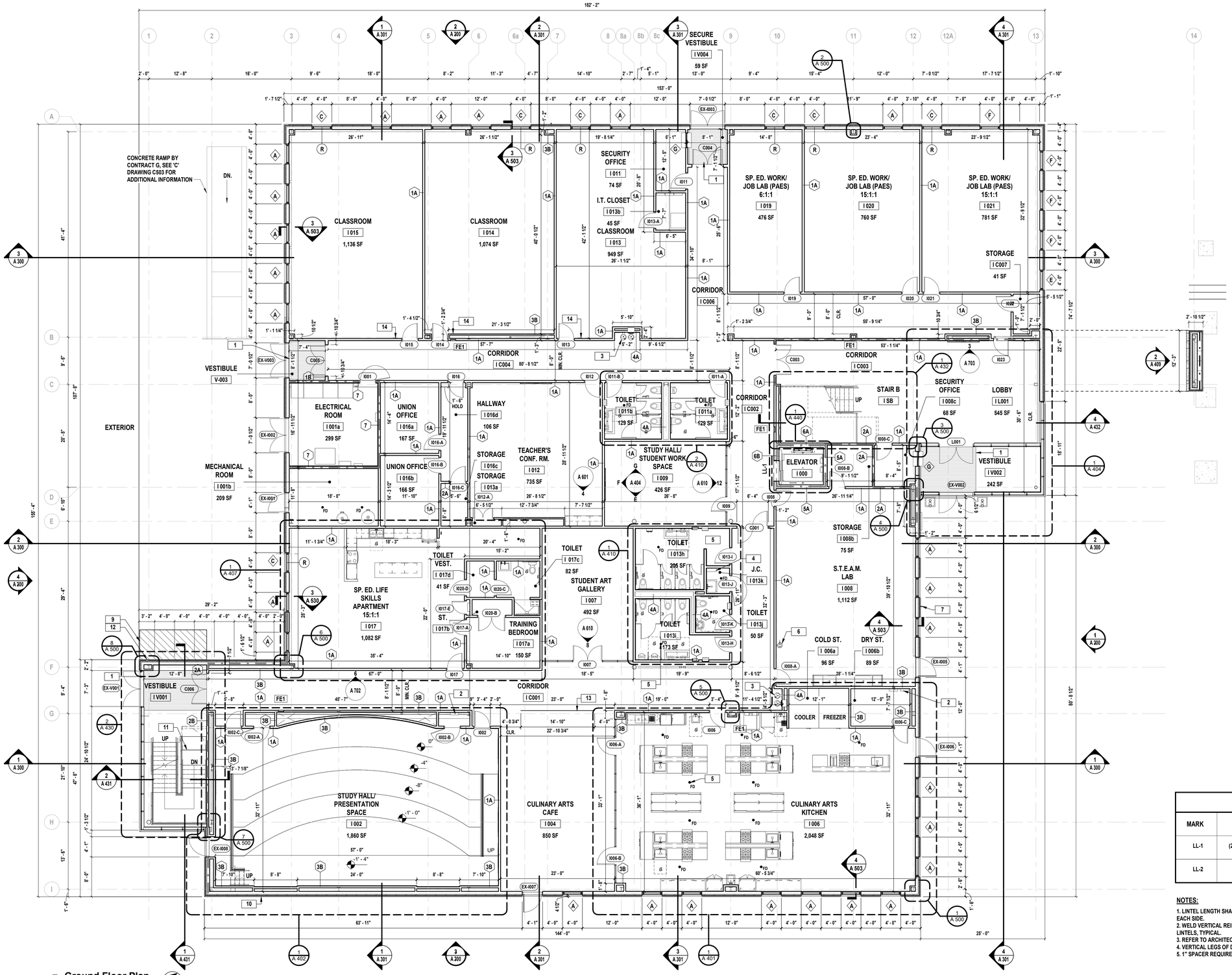

1 Ground Floor Plan
SCALE: 1/8" = 1'-0"

LINTEL SCHEDULE

MARK	SIZE	DETAILS	COMMENTS
LL-1	(2) 3-1/2 x 3-1/2x 5/16" (LLV)		NOTES 1-4
LL-2	(2) L5 x 5 x 5/16"		NOTES 1-5

NOTES:

1. LINTEL LENGTH SHALL BE M.O. + 1'-4" TO PROVIDE MIN. BEARING OF 8" ONTO SOLID MASONRY ON EACH SIDE.
2. WELD VERTICAL REINFORCEMENT INTERRUPTED BY MASONRY OPENINGS TO TOP OF THE STEEL LINTELS, TYPICAL.
3. REFER TO ARCHITECTURAL FLOOR PLANS AND ELEVATIONS FOR LINTEL LOCATIONS.
4. VERTICAL LEGS OF DOUBLE ANGLES SHALL BE WELDED TOGETHER.
5. 1" SPACER REQUIRED.

FLOOR PLAN GENERAL NOTES

1. COORDINATE THE WORK INDICATED HERE WITH ALL CONTRACT DOCUMENTS AND SPECIFICATIONS.
2. FOR WALL CONSTRUCTION REFER TO PARTITION SCHEDULE AND DETAILS ON SHEET A 000.00.
3. ALL DIMENSIONS ARE TO ROUGH STUD OR CONCRETE MASONRY UNIT (STRUCTURE), UNLESS NOTED OTHERWISE.
4. ALL DOORS IN STUD WALLS SHALL BE EITHER CENTERED ON WALLS, 4" FROM WALL TO ROUGH JAMB, OR AS OTHERWISE INDICATED.
5. PROVIDE SADDLES WHERE INDICATED AT ROOM TRANSITIONS AS NOTED IN THE DOOR SCHEDULE. SADDLES TO BE FULL WIDTH OF OPENING. (SEE THE PROJECT MANUAL FOR ADDITIONAL INFORMATION).
6. ALL PAINTING SHALL BE PERFORMED IN ACCORDANCE WITH THE REQUIREMENTS CONTAINED IN SECTION 099123 OF THE PROJECT MANUAL.
7. REFER TO ENLARGED FLOOR PLANS, DETAILS AND ALL OTHER CONTRACT DOCUMENTS AND SPECIFICATIONS FOR ADDITIONAL FRAMING INFORMATION.
8. FOR DOORS DENOTED (—) REFER TO DOOR SCHEDULE FOR ADDITIONAL INFORMATION.
9. FOR WINDOWS DENOTED ◇, REFER TO WINDOW SCHEDULE FOR ADDITIONAL INFORMATION.
10. ACCOMMODATE THE CONSTRUCTION TO ACCEPT ALL PIPING, CONDUITS, EQUIPMENT, ETC., EITHER SPECIFIED OR DETAILED TO BE RECESSED OR CONCEALED IN WALLS AS REQUIRED.
11. FOR ALL STAIRS, SEE ENLARGED PLANS, SECTIONS AND DETAILS ON A 430 SERIES DRAWINGS.
12. ALL ELEVATOR LANDINGS AND INSIDE AND OUTSIDE OF STAIR LANDINGS ARE TO RECEIVE EMERGENCY EXIT MAPS, MAPS HAVE BEEN PROVIDED IN SPECIFICATION SECTION 101423.
13. ALL EXPOSED CORNERS OF GYPSUM WALL BOARD ARE TO RECEIVE CORNER GUARDS UNLESS NOTED OR DIRECTED OTHERWISE BY THE ARCHITECT.
14. SEE SLAB PLAN FOR CONTROL AND EXPANSION JOINT LOCATIONS.
15. COORDINATE LOCATIONS FOR FLOOR DRAINS WITH CONTRACT "P."
16. PROVIDE RECESSED WALK OFF MAT IN CONCRETE FLOOR SLAB WHERE INDICATED ON PLANS BY CONTRACT 'G',
17. REFER TO SHEETS G 100.00 FOR FIRE RATED WALLS AND FIRE EXTINGUISHER LOCATIONS TO BE PROVIDED AND INSTALLED BY CONTRACT 'G'.

FLOOR PLAN KEYNOTE LEGEND

KEYNOTE	SCOPE OF WORK
1	WALK OFF MAT, SEE DETAILS FOR ADDITIONAL INFORMATION.
2	ELECTRICAL PANEL BY CONTRACT 'E'. REFER TO ELECTRICAL DRAWINGS.
3	WALL MOUNTED ADA DRINKING FOUNTAIN + BOTTLE FILLER. REFER TO SPECIFICATIONS FOR ADDITIONAL INFORMATION. FURNISHED AND INSTALLED BY CONTRACT 'P', ELECTRICAL CONNECTIONS BY CONTRACT 'E'.
4	WALL MOUNT MOP/BROOM HOLDER FURNISHED AND INSTALLED BY CONTRACT 'G'.
5	FLOOR DRAIN, PROVIDED BY CONTRACT 'P'. CONTRACT 'G' TO COORDINATE INSTALL AS REQUIRED.
6	EMERGENCY EYE WASH BY CONTRACT 'P'. SEE 'P' DRAWINGS FOR ADDITIONAL INFORMATION.
7	HOSE BIB BY CONTRACT 'P'. SEE 'P' DRAWINGS FOR ADDITIONAL INFORMATION.
8	ROOF ACCESS LADDER BY CONTRACT 'G'. SEE DRAWING A540.00 AND SPECIFICATIONS FOR ADDITIONAL INFORMATION.
9	APPROXIMATE LOCATION OF GAS METER. SEE 'P' DRAWINGS FOR ADDITIONAL INFORMATION.
10	CAST METAL BUILDING SIGNAGE. 24" HIGH X 2" DEEP LED BACKLIT.
11	STAIR WAY GATE. REFER TO SPECIFICATIONS FOR ADDITIONAL INFORMATION.
12	HIGH-SECURITY KEY LOCK BOX. REFER TO SPECIFICATIONS FOR ADDITIONAL INFORMATION.
13	3'-0" CRL GRS DRY GLAZED RAILING SYSTEM, SEE SPECIFICATION FOR ADDITIONAL INFORMATION.
14	NEW SIGNAGE TO BE PROVIDED BY 'G' CONTRACTOR 24" X 18" RED LETTERING ON WHITE BACKGROUND. OCCUPANCY SIGN TO READ " MAXIMUM OCCUPANCY NOT TO EXCEED 49 PEOPLE".

FLOOR PLAN LEGEND

	EXTERIOR WALL CONSTRUCTION - SEE WALL TYPES ON A-000 FOR ADDITIONAL INFORMATION	FE	RECESSED FIRE EXTINGUISHER
	INTERIOR MASONRY WALL CONSTRUCTION - SEE WALL TYPES ON A-000 FOR ADDITIONAL INFORMATION		SINGLE DRINKING WATER/ BOTTLE FILLING STATION
	INTERIOR METAL STUD WALL CONSTRUCTION - SEE WALL TYPES ON A-000 FOR ADDITIONAL INFORMATION		DOUBLE DRINKING WATER/ BOTTLE FILLING STATION
	WINDOW, FRAME AND ASSOCIATED HARDWARE - SEE SCHEDULE FOR ADDITIONAL INFORMATION		EMERGENCY EYE WASH STATION
	DOOR, FRAME AND ASSOCIATED HARDWARE - SEE SCHEDULE FOR ADDITIONAL INFORMATION	FD	FLOOR DRAIN, SEE 'P' DRAWINGS FOR ADDITIONAL INFORMATION

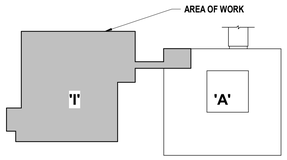

Key Plan
Scale: N.T.S.

H2M architects + engineers
538 Broad Hollow Road, 4th Floor East
Melville, NY 11747
631.756.8000 • www.h2m.com
Architecture & Landscape Architecture: No Certificate Required
Engineering Certificate of Authorization No.: 0018178

CONSULTANTS:

MARK	DATE	DESCRIPTION
1	08-23-2024	SED ADDENDUM 1
2	01-10-2025	SED ADDENDUM 2

REGISTERED ARCHITECT KEVIN MICHAEL MEDLER 036379 STATE OF NEW YORK

KEVIN M. MEDLER, R.A.
NY PROFESSIONAL ARCHITECT Lic. No. 036379

DESIGNED BY:	DRAWN BY:	CHECKED BY:	REVIEWED BY:
CWP	DOD/NPO	CWP/KMM	
PROJECT No: WPSD 2203	DATE: MARCH 2025	SCALE: AS SHOWN	

CLIENT

WHITE PLAINS CITY SCHOOL DISTRICT

ADDITION AT WHITE PLAINS HIGH SCHOOL

550 NORTH STREET, WHITE PLAINS, NY 10605

66-22-00-01-0-016-030

CONTRACT
CONTRACT G
GENERAL CONSTRUCTION

STATUS
FINAL BID SET

SHEET TITLE
GROUND FLOOR PLAN, NOTES, AND LEGEND

DRAWING No.
A 100.00

C:\Users\ddesouza\Documents\WPSD2203_Central21_A_DDeSouzaDMT18.rvt

3/21/2025 9:27:41 AM

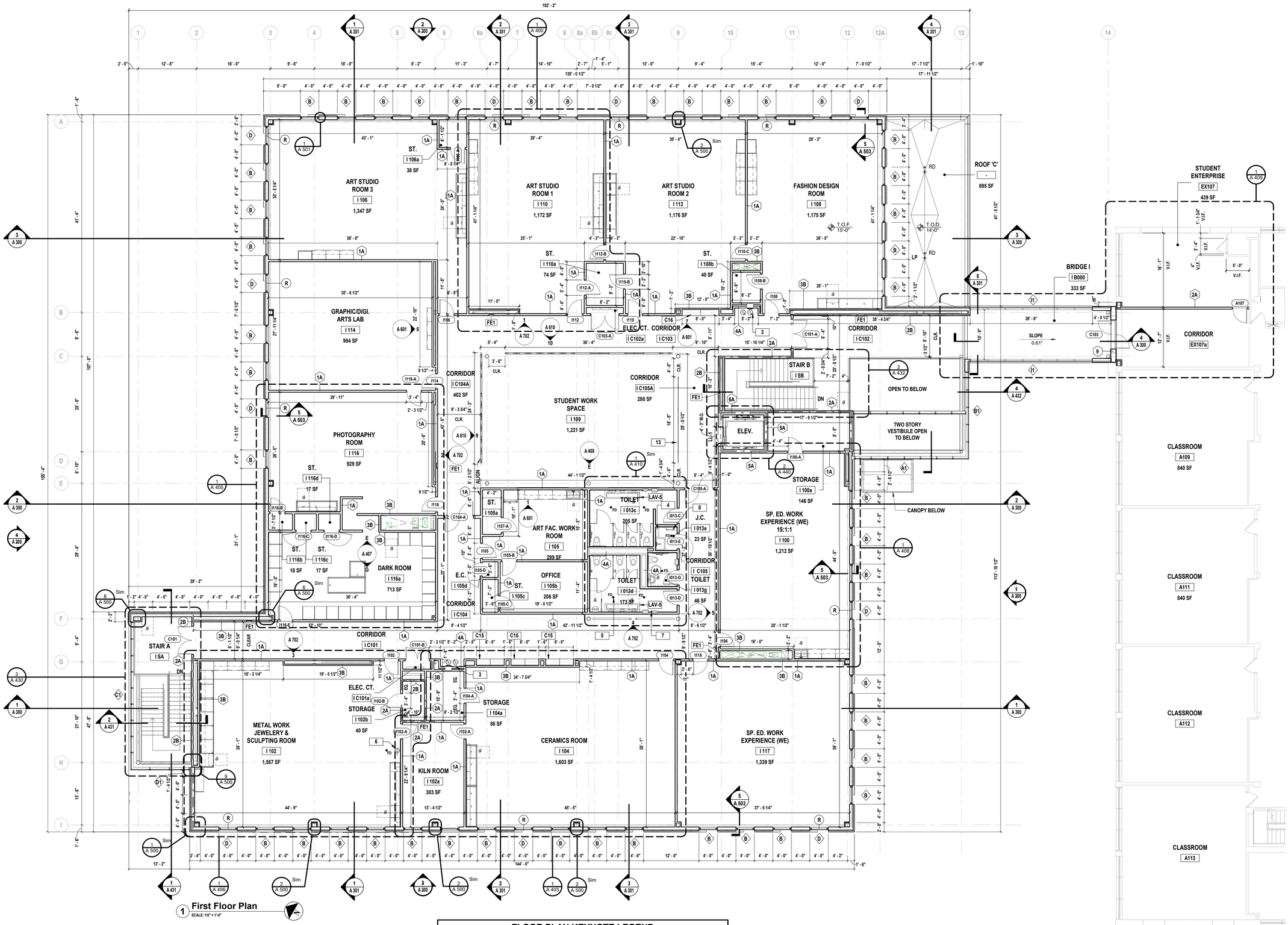

1 First Floor Plan
SCALE: 1/8" = 1'-0"

FLOOR PLAN GENERAL NOTES

1. COORDINATE THE WORK INDICATED HERE WITH ALL CONTRACT DOCUMENTS AND SPECIFICATIONS.
2. FOR WALL CONSTRUCTION REFER TO PARTITION SCHEDULE AND DETAILS ON SHEET A 000.00.
3. ALL DIMENSIONS ARE TO ROUGH STUD OR CONCRETE MASONRY UNIT (STRUCTURE), UNLESS NOTED OTHERWISE.
4. ALL DOORS IN STUD WALLS SHALL BE EITHER CENTERED ON WALLS, 4" FROM WALL TO ROUGH JAMB, OR AS OTHERWISE INDICATED.
5. PROVIDE SADDLES WHERE INDICATED AT ROOM TRANSITIONS AS NOTED IN THE DOOR SCHEDULE. SADDLES TO BE FULL WIDTH OF OPENING. (SEE THE PROJECT MANUAL FOR ADDITIONAL INFORMATION).
6. ALL PAINTING SHALL BE PERFORMED IN ACCORDANCE WITH THE REQUIREMENTS CONTAINED IN SECTION 099123 OF THE PROJECT MANUAL.
7. REFER TO ENLARGED FLOOR PLANS, DETAILS AND ALL OTHER CONTRACT DOCUMENTS AND SPECIFICATIONS FOR ADDITIONAL FRAMING INFORMATION.
8. FOR DOORS DENOTED, (—) REFER TO DOOR SCHEDULE FOR ADDITIONAL INFORMATION.
9. FOR WINDOWS DENOTED (◇), REFER TO WINDOW SCHEDULE FOR ADDITIONAL INFORMATION.
10. ACCOMMODATE THE CONSTRUCTION TO ACCEPT ALL PIPING, CONDUITS, EQUIPMENT, ETC., EITHER SPECIFIED OR DETAILED TO BE RECESSED OR CONCEALED IN WALLS AS REQUIRED.
11. FOR ALL STAIRS, SEE ENLARGED PLANS, SECTIONS AND DETAILS ON A 430 SERIES DRAWINGS.
12. ALL ELEVATOR LANDINGS AND INSIDE AND OUTSIDE OF STAIR LANDINGS ARE TO RECEIVE EMERGENCY EXIT MAPS, MAPS HAVE BEEN PROVIDED IN SPECIFICATION SECTION 101423.
13. ALL EXPOSED CORNERS OF GYPSUM WALL BOARD ARE TO RECEIVE CORNER GUARDS UNLESS NOTED OR DIRECTED OTHERWISE BY THE ARCHITECT.
14. SEE SLAB PLAN FOR CONTROL AND EXPANSION JOINT LOCATIONS.
15. COORDINATE LOCATIONS FOR FLOOR DRAINS WITH CONTRACT "P."
16. PROVIDE RECESSED WALK OFF MAT IN CONCRETE FLOOR SLAB WHERE INDICATED ON PLANS BY CONTRACT 'G',
17. REFER TO SHEETS G 100.00 FOR FIRE RATED WALLS AND FIRE EXTINGUISHER LOCATIONS TO BE PROVIDED AND INSTALLED BY CONTRACT 'G'.

FLOOR PLAN KEYNOTE LEGEND

KEYNOTE	SCOPE OF WORK
1	WALK OFF MAT, SEE DETAILS FOR ADDITIONAL INFORMATION.
2	ELECTRICAL PANEL BY CONTRACT 'E'. REFER TO ELECTRICAL DRAWINGS.
3	WALL MOUNTED ADA DRINKING FOUNTAIN + BOTTLE FILLER. REFER TO SPECIFICATIONS FOR ADDITIONAL INFORMATION. FURNISHED AND INSTALLED BY CONTRACT 'P', ELECTRICAL CONNECTIONS BY CONTRACT 'E'.
4	WALL MOUNT MOP/BROOM HOLDER FURNISHED AND INSTALLED BY CONTRACT 'G'.
5	FLOOR DRAIN, PROVIDED BY CONTRACT 'P'. CONTRACT 'G' TO COORDINATE INSTALL AS REQUIRED.
6	EMERGENCY EYE WASH BY CONTRACT 'P'. SEE 'P' DRAWINGS FOR ADDITIONAL INFORMATION.
7	HOSE BIB BY CONTRACT 'P'. SEE 'P' DRAWINGS FOR ADDITIONAL INFORMATION.
8	ROOF ACCESS LADDER BY CONTRACT 'G'. SEE DRAWING A540.00 AND SPECIFICATIONS FOR ADDITIONAL INFORMATION.
9	APPROXIMATE LOCATION OF GAS METER. SEE 'P' DRAWINGS FOR ADDITIONAL INFORMATION.
10	CAST METAL BUILDING SIGNAGE. 24" HIGH X 2" DEEP LED BACKLIT.
11	STAIR WAY GATE. REFER TO SPECIFICATIONS FOR ADDITIONAL INFORMATION.
12	HIGH-SECURITY KEY LOCK BOX. REFER TO SPECIFICATIONS FOR ADDITIONAL INFORMATION.
13	3'-0" CRL GRS DRY GLAZED RAILING SYSTEM. SEE SPECIFICATION FOR ADDITIONAL INFORMATION.
14	NEW SIGNAGE TO BE PROVIDED BY 'G' CONTRACTOR 24" X 18" RED LETTERING ON WHITE BACKGROUND. OCCUPANCY SIGN TO READ " MAXIMUM OCCUPANCY NOT TO EXCEED 49 PEOPLE".

FLOOR PLAN LEGEND

	EXTERIOR WALL CONSTRUCTION - SEE WALL TYPES ON A-000 FOR ADDITIONAL INFORMATION	FE	RECESSED FIRE EXTINGUISHER
	INTERIOR MASONRY WALL CONSTRUCTION - SEE WALL TYPES ON A-000 FOR ADDITIONAL INFORMATION		SINGLE DRINKING WATER/ BOTTLE FILLING STATION
	INTERIOR METAL STUD WALL CONSTRUCTION - SEE WALL TYPES ON A-000 FOR ADDITIONAL INFORMATION		DOUBLE DRINKING WATER/ BOTTLE FILLING STATION
	WINDOW, FRAME AND ASSOCIATED HARDWARE - SEE SCHEDULE FOR ADDITIONAL INFORMATION		EMERGENCY EYE WASH STATION
	DOOR, FRAME AND ASSOCIATED HARDWARE - SEE SCHEDULE FOR ADDITIONAL INFORMATION	FD	FLOOR DRAIN, SEE 'P' DRAWINGS FOR ADDITIONAL INFORMATION

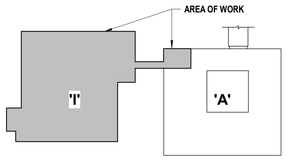

Key Plan
Scale: N.T.S.

H2M architects + engineers
538 Broad Hollow Road, 4th Floor East
Melville, NY 11747
631.756.8000 • www.h2m.com
Architecture & Landscape Architecture: No Certificate Required
Engineering Certificate of Authorization No.: 0018178

CONSULTANTS:

MARK	DATE	DESCRIPTION
1	08-23-2024	SED ADDENDUM 1
2	01-10-2025	SED ADDENDUM 2

KEVIN M. MEDLER, R.A.
AT PROFESSIONAL ARCHITECT No. 038379

DESIGNED BY:	DRAWN BY:	CHECKED BY:	REVIEWED BY:
CWP	DOD/NPO	CWP/KMM	
PROJECT No: WPSD 2203	DATE: MARCH 2025	SCALE: AS SHOWN	

CLIENT
WHITE PLAINS CITY SCHOOL DISTRICT

ADDITION AT WHITE PLAINS HIGH SCHOOL

550 NORTH STREET, WHITE PLAINS, NY 10605

66-22-00-01-0-016-030

CONTRACT
CONTRACT G
GENERAL CONSTRUCTION

STATUS
FINAL BID SET

SHEET TITLE
FIRST FLOOR PLAN, NOTES, AND LEGEND

DRAWING No.
A 101.00

C:\Users\sdesouza\Documents\WPSD2203_Central21_A_DDxSouzaDOR18.rvt

3/17/2025 7:41:29 AM

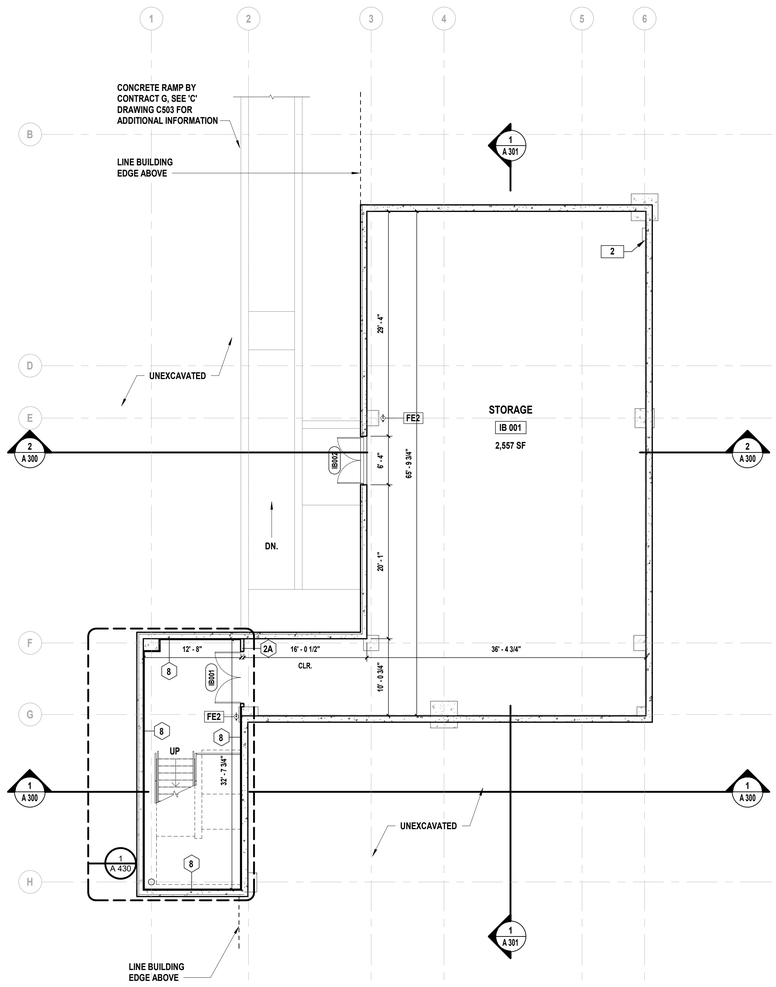

1 **Basement Floor Plan**
SCALE: 1/8" = 1'-0"

FLOOR PLAN GENERAL NOTES

1. COORDINATE THE WORK INDICATED HERE WITH ALL CONTRACT DOCUMENTS AND SPECIFICATIONS.
2. FOR WALL CONSTRUCTION REFER TO PARTITION SCHEDULE AND DETAILS ON SHEET A 000.00.
3. ALL DIMENSIONS ARE TO ROUGH STUD OR CONCRETE MASONRY UNIT (STRUCTURE), UNLESS NOTED OTHERWISE.
4. ALL DOORS IN STUD WALLS SHALL BE EITHER CENTERED ON WALLS, 4" FROM WALL TO ROUGH JAMB, OR AS OTHERWISE INDICATED.
5. PROVIDE SADDLES WHERE INDICATED AT ROOM TRANSITIONS AS NOTED IN THE DOOR SCHEDULE. SADDLES TO BE FULL WIDTH OF OPENING. (SEE THE PROJECT MANUAL FOR ADDITIONAL INFORMATION).
6. ALL PAINTING SHALL BE PERFORMED IN ACCORDANCE WITH THE REQUIREMENTS CONTAINED IN SECTION 099123 OF THE PROJECT MANUAL.
7. REFER TO ENLARGED FLOOR PLANS, DETAILS AND ALL OTHER CONTRACT DOCUMENTS AND SPECIFICATIONS FOR ADDITIONAL FRAMING INFORMATION.
8. FOR DOORS DENOTED, (—) REFER TO DOOR SCHEDULE FOR ADDITIONAL INFORMATION.
9. FOR WINDOWS DENOTED ◇, REFER TO WINDOW SCHEDULE FOR ADDITIONAL INFORMATION.
10. ACCOMMODATE THE CONSTRUCTION TO ACCEPT ALL PIPING, CONDUITS, EQUIPMENT, ETC., EITHER SPECIFIED OR DETAILED TO BE RECESSED OR CONCEALED IN WALLS AS REQUIRED.
11. FOR ALL STAIRS, SEE ENLARGED PLANS, SECTIONS AND DETAILS ON A 430 SERIES DRAWINGS.
12. ALL ELEVATOR LANDINGS AND INSIDE AND OUTSIDE OF STAIR LANDINGS ARE TO RECEIVE EMERGENCY EXIT MAPS, MAPS HAVE BEEN PROVIDED IN SPECIFICATION SECTION 101423.
13. ALL EXPOSED CORNERS OF GYPSUM WALL BOARD ARE TO RECEIVE CORNER GUARDS UNLESS NOTED OR DIRECTED OTHERWISE BY THE ARCHITECT.
14. SEE SLAB PLAN FOR CONTROL AND EXPANSION JOINT LOCATIONS.
15. COORDINATE LOCATIONS FOR FLOOR DRAINS WITH CONTRACT "P."
16. PROVIDE RECESSED WALK OFF MAT IN CONCRETE FLOOR SLAB WHERE INDICATED ON PLANS BY CONTRACT 'G',
17. REFER TO SHEETS G 100.00 FOR FIRE RATED WALLS AND FIRE EXTINGUISHER LOCATIONS TO BE PROVIDED AND INSTALLED BY CONTRACT 'G'.

FLOOR PLAN KEYNOTE LEGEND

KEYNOTE	SCOPE OF WORK
1	WALK OFF MAT, SEE DETAILS FOR ADDITIONAL INFORMATION.
2	ELECTRICAL PANEL BY CONTRACT 'E'. REFER TO ELECTRICAL DRAWINGS.
3	WALL MOUNTED ADA DRINKING FOUNTAIN + BOTTLE FILLER. REFER TO SPECIFICATIONS FOR ADDITIONAL INFORMATION. FURNISHED AND INSTALLED BY CONTRACT 'P', ELECTRICAL CONNECTIONS BY CONTRACT 'E'.
4	WALL MOUNT MOP/BROOM HOLDER FURNISHED AND INSTALLED BY CONTRACT 'G'.
5	FLOOR DRAIN, PROVIDED BY CONTRACT 'P'. CONTRACT 'G' TO COORDINATE INSTALL AS REQUIRED.
6	EMERGENCY EYE WASH BY CONTRACT 'P'. SEE 'P' DRAWINGS FOR ADDITIONAL INFORMATION.
7	HOSE BIB BY CONTRACT 'P'. SEE 'P' DRAWINGS FOR ADDITIONAL INFORMATION.
8	ROOF ACCESS LADDER BY CONTRACT 'G'. SEE DRAWING A540.00 AND SPECIFICATIONS FOR ADDITIONAL INFORMATION.
9	APPROXIMATE LOCATION OF GAS METER. SEE 'P' DRAWINGS FOR ADDITIONAL INFORMATION.
10	CAST METAL BUILDING SIGNAGE. 24" HIGH X 2" DEEP LED BACKLIT.
11	STAIR WAY GATE. REFER TO SPECIFICATIONS FOR ADDITIONAL INFORMATION.
12	HIGH-SECURITY KEY LOCK BOX. REFER TO SPECIFICATIONS FOR ADDITIONAL INFORMATION.
13	3'-0" CRL GRS DRY GLAZED RAILING SYSTEM, SEE SPECIFICATION FOR ADDITIONAL INFORMATION.
14	NEW SIGNAGE TO BE PROVIDED BY 'G' CONTRACTOR 24" X 18" RED LETTERING ON WHITE BACKGROUND. OCCUPANCY SIGN TO READ " MAXIMUM OCCUPANCY NOT TO EXCEED 49 PEOPLE".

FLOOR PLAN LEGEND

	EXTERIOR WALL CONSTRUCTION - SEE WALL TYPES ON A-000 FOR ADDITIONAL INFORMATION	FE	RECESSED FIRE EXTINGUISHER
	INTERIOR MASONRY WALL CONSTRUCTION - SEE WALL TYPES ON A-000 FOR ADDITIONAL INFORMATION		SINGLE DRINKING WATER/ BOTTLE FILLING STATION
	INTERIOR METAL STUD WALL CONSTRUCTION - SEE WALL TYPES ON A-000 FOR ADDITIONAL INFORMATION		DOUBLE DRINKING WATER/ BOTTLE FILLING STATION
	WINDOW, FRAME AND ASSOCIATED HARDWARE - SEE SCHEDULE FOR ADDITIONAL INFORMATION		EMERGENCY EYE WASH STATION
	DOOR, FRAME AND ASSOCIATED HARDWARE - SEE SCHEDULE FOR ADDITIONAL INFORMATION	FD	FLOOR DRAIN, SEE 'P' DRAWINGS FOR ADDITIONAL INFORMATION

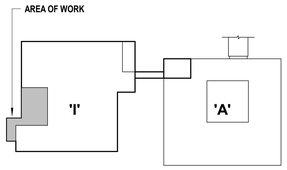

Key Plan
Scale: N.T.S.

H2M architects + engineers
538 Broad Hollow Road, 4th Floor East
Melville, NY 11747
631.756.8000 • www.h2m.com
Architecture & Landscape Architecture: No Certificate Required
Engineering Certificate of Authorization No.: 0018178

CONSULTANTS:

MARK	DATE	DESCRIPTION

REGISTERED ARCHITECT KEVIN MICHAEL MEDLER 038379 STATE OF NEW YORK

KEVIN M. MEDLER, R.A.
NY PROFESSIONAL ARCHITECT Lic. No. 038379
THE TRANSFERABILITY AND ACCURACY OF DATA IS LIMITED TO THE ORIGINAL FORMAT EXISTING AT H2M ARCHITECTS + ENGINEERS, IN ALBANY, NY.

ST010924
Exp. Date

DESIGNED BY:	DRAWN BY:	CHECKED BY:	REVIEWED BY:
CWP	DOD/NPO	Checker	-
PROJECT No: WPSD 2203	DATE: MARCH 2025	SCALE: AS SHOWN	

CLIENT
WHITE PLAINS CITY SCHOOL DISTRICT

ADDITION AT WHITE PLAINS HIGH SCHOOL

550 NORTH STREET, WHITE PLAINS, NY 10605

66-22-00-01-0-016-030

CONTRACT
CONTRACT G
GENERAL CONSTRUCTION

STATUS
FINAL BID SET

SHEET TITLE
BASEMENT FLOOR PLAN, NOTES, AND LEGEND

DRAWING No.
A 102.00

C:\Users\ddesouza\Documents\WPSD2203_Center21_A_DDoSouzaDBTLB.rvt
3/17/2025 7:41:29 AM

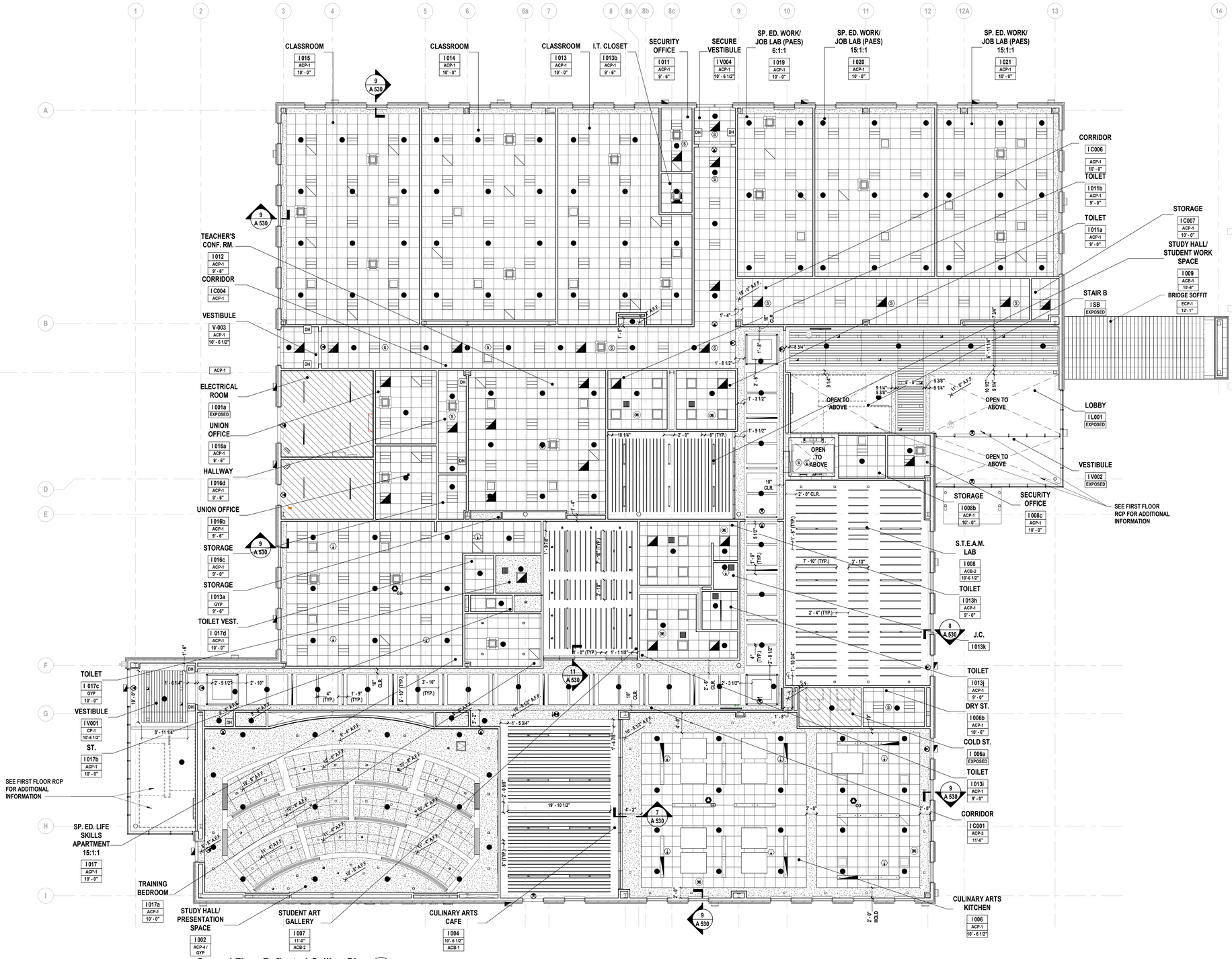

1 Ground Floor Reflected Ceiling Plan
SCALE: 1/8" = 1'-0"

REFLECTED CEILING PLAN NOTES

1. CONTRACTOR SHALL COORDINATE ALL THE WORK REQUIRED ON THIS DRAWING WITH ALL ARCHITECTURAL, STRUCTURAL, & MEP DRAWINGS AND SPECIFICATIONS.
2. ACCOMMODATE THE CONSTRUCTION TO ACCEPT ALL PIPING, CONDUITS, EQUIPMENT, ETC., EITHER SPECIFIED OR DETAILED TO BE RECESSED OR CONCEALED IN MASONRY STUD WALLS AS REQUIRED BY THIS CONTRACT. COORDINATE THE LOCATION OF ANY RECESSED OR CONCEALED ITEMS.
3. SEE CEILING DETAILS AND FINISH SCHEDULE ON DRAWINGS FOR ADDITIONAL INFORMATION.
4. EXPOSED CEILINGS SHALL BE PAINTED. THIS INCLUDES ALL STRUCTURAL STEEL, METAL DECK, CONDUITS, PIPING, & ANY OTHER ITEMS FASTENED OR SUSPENDED FROM CEILING U.N.O.

REFLECTED CEILING PLAN LEGEND

8'-8"	CEILING HEIGHT ABOVE FINISH FLOOR		EXPOSED CEILING (PAINT)	OS	OCCUPANCY SENSOR. SEE 'E' DWGS FOR ADDITIONAL INFO.		LINEAR VENEERED CEILING PLANKS (CP-1)
	PENDANT MOUNTED FIXTURE	H	HEAT DETECTOR. SEE 'E' DWGS FOR ADDITIONAL INFO.	DS	DAYLIGHT SENSOR. SEE 'E' DWGS FOR ADDITIONAL INFO.		METAL CEILING PANELS 2'X4' (CP-2)
	RECESSED LINEAR LED LIGHT FIXTURE. SEE 'E' DWGS FOR ADDITIONAL INFO.	Co	CARBON MONOXIDE DETECTOR. SEE 'E' DWGS FOR ADDITIONAL INFO.		4'X4' ACOUSTICAL PERFORATED PANELS (ACP-2)		EXTERIOR CEILING PANELS 9" (ECP-1)
	2'x2' LAY-IN LIGHT FIXTURE. SEE 'E' DWGS FOR ADDITIONAL INFO.		CEILING INDOOR VRV CASSETTE. SEE 'H' DWGS FOR ADDITIONAL INFO.		4'X6' ACOUSTICAL PERFORATED PANELS (ACP-3)		18"X18" ACCESS PANEL. COORDINATE LOCATION WITH 'H' DWGS
	EXIT SIGN. SEE 'E' DWGS FOR ADDITIONAL INFO.		CLG. DIFFUSER AIR GRILLE. SEE 'H' DWGS FOR ADDITIONAL INFO.		ACOUSTICAL PERFORATED PANELS (ACP-4)		
	4" SQUARE LED DOWN LIGHT FIXTURE. SEE 'E' DWGS FOR ADDITIONAL INFO.		CLG. RETURN AIR GRILLE. SEE 'H' DWGS FOR ADDITIONAL INFO.		1" THICK METAL ACOUSTICAL BLADES (ACB-1)		
	2'X2' ACOUSTICAL CEILING PANEL (ACP-1)		CONCEALED SPRINKLER HEAD. SEE 'SP' DWGS FOR ADDITIONAL INFO.		2" THICK ACOUSTICAL BLADES (ACB-2)		
	GYPSUM CEILING (PAINT) (GYP)	S	SMOKE DETECTOR. SEE 'E' DWGS FOR ADDITIONAL INFO.		2" THICK METAL ACOUSTICAL BLADES (ACB-3)		

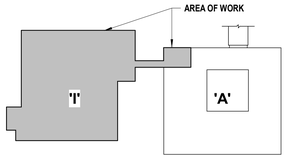

Key Plan
Scale: N.T.S.

H2M architects + engineers
538 Broad Hollow Road, 4th Floor East
Melville, NY 11747
631.756.8000 • www.h2m.com
Architecture & Landscape Architecture: No Certificate Required
Engineering Certificate of Authorization No.: 0018178

CONSULTANTS:

MARK	DATE	DESCRIPTION
2	01-10-2025	SED ADDENDUM 2

KEVIN M. MEDLER, R.A.
NY PROFESSIONAL ARCHITECT Lic. No. 036379
"ALTERATION OF THIS DOCUMENT EXCEPT BY A LICENSED PROFESSIONAL IS ILLEGAL"
Exp. Date

DESIGNED BY:	DRAWN BY:	CHECKED BY:	REVIEWED BY:
CWP	DOD/NPO	CWP/KMM	
PROJECT No: WPSD 2203	DATE: MARCH 2025	SCALE: AS SHOWN	

CLIENT
WHITE PLAINS CITY SCHOOL DISTRICT

ADDITION AT WHITE PLAINS HIGH SCHOOL

550 NORTH STREET, WHITE PLAINS, NY 10605

66-22-00-01-0-016-030

CONTRACT
CONTRACT G
GENERAL CONSTRUCTION

STATUS
FINAL BID SET

SHEET TITLE
GROUND FLOOR REFLECTED CEILING PLAN & NOTES

DRAWING No.
A 120.00

C:\Users\ddesouza\Documents\WPSD2003_Central21_A_DDeSouza3DR1LB.rvt
3/6/2025 2:46:24 PM

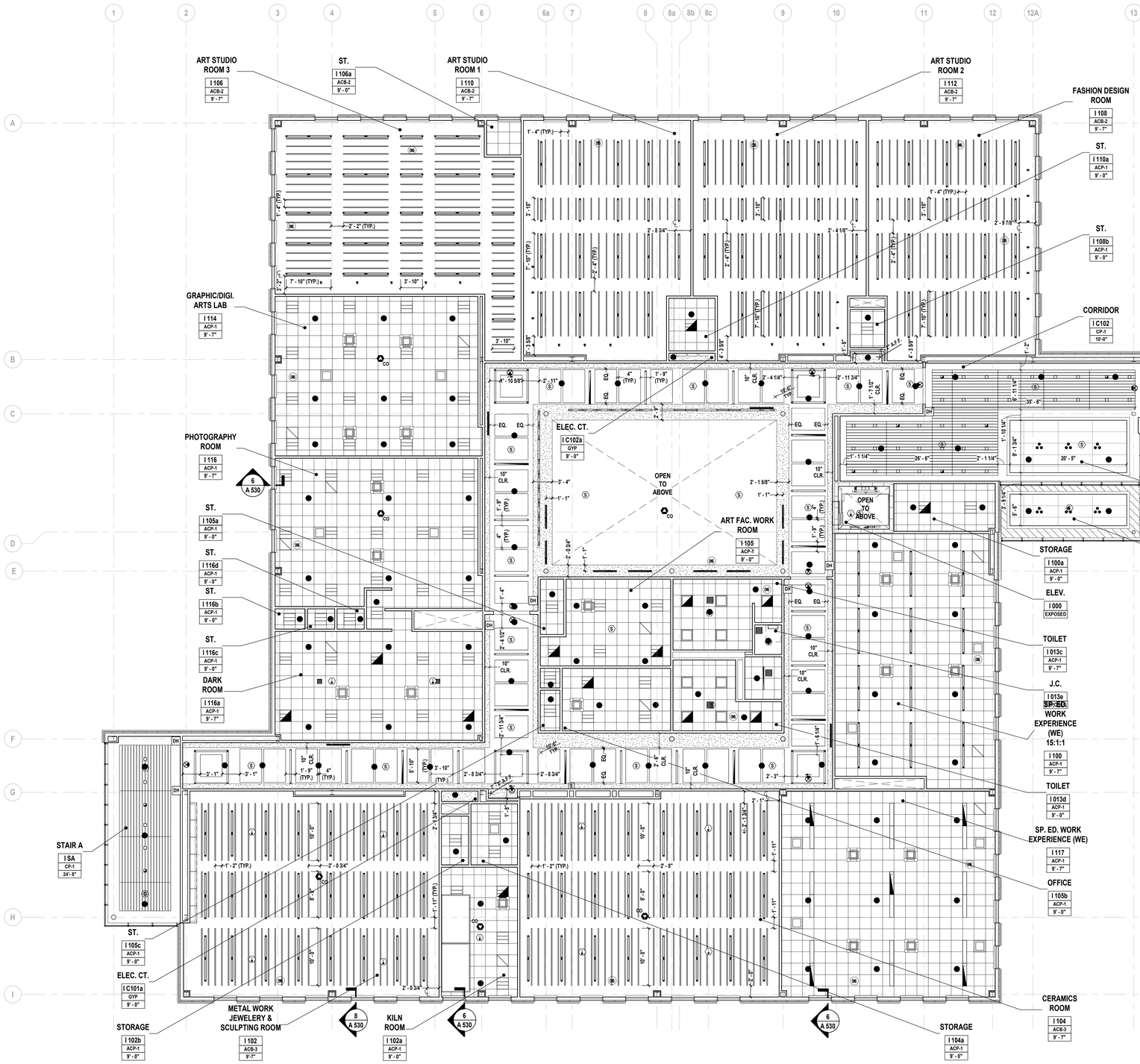

1 First Floor Reflected Ceiling Plan
SCALE: 1/8" = 1'-0"

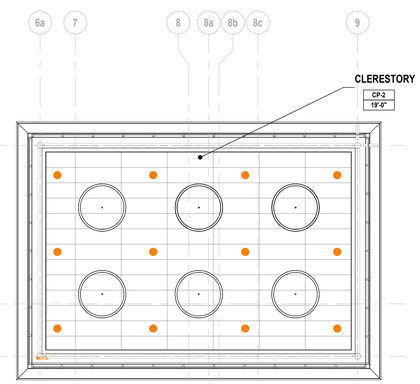

2 Clerestory Reflected Ceiling Plan
SCALE: 1/8" = 1'-0"

REFLECTED CEILING PLAN NOTES

1. CONTRACTOR SHALL COORDINATE ALL THE WORK REQUIRED ON THIS DRAWING WITH ALL ARCHITECTURAL, STRUCTURAL, & MEP DRAWINGS AND SPECIFICATIONS.
2. ACCOMMODATE THE CONSTRUCTION TO ACCEPT ALL PIPING, CONDUITS, EQUIPMENT, ETC., EITHER SPECIFIED OR DETAILED TO BE RECESSED OR CONCEALED IN MASONRY/ STUD WALLS AS REQUIRED BY THIS CONTRACT. COORDINATE THE LOCATION OF ANY RECESSED OR CONCEALED ITEMS.
3. SEE CEILING DETAILS AND FINISH SCHEDULE ON DRAWINGS FOR ADDITIONAL INFORMATION.
4. EXPOSED CEILINGS SHALL BE PAINTED. THIS INCLUDES ALL STRUCTURAL STEEL, METAL DECK, CONDUITS, PIPING, & ANY OTHER ITEMS FASTENED OR SUSPENDED FROM CEILING U.N.O.

REFLECTED CEILING PLAN LEGEND

8'-8"	CEILING HEIGHT ABOVE FINISH FLOOR		EXPOSED CEILING (PAINT)	OS	OCCUPANCY SENSOR. SEE 'E' DWGS FOR ADDITIONAL INFO.		LINEAR VENEERED CEILING PLANKS (CP-1)
	PENDANT MOUNTED FIXTURE	H	HEAT DETECTOR. SEE 'E' DWGS FOR ADDITIONAL INFO.	DS	DAYLIGHT SENSOR. SEE 'E' DWGS FOR ADDITIONAL INFO.		METAL CEILING PANELS 2'X4' (CP-2)
	RECESSED LINEAR LED LIGHT FIXTURE. SEE 'E' DWGS FOR ADDITIONAL INFO.	Co	CARBON MONOXIDE DETECTOR. SEE 'E' DWGS FOR ADDITIONAL INFO.		4'X4' ACOUSTICAL PERFORATED PANELS (ACP-2)		EXTERIOR CEILING PANELS 9" (ECP-1)
	2'x2' LAY-IN LIGHT FIXTURE. SEE 'E' DWGS FOR ADDITIONAL INFO.		CEILING INDOOR VRV CASSETTE. SEE 'H' DWGS FOR ADDITIONAL INFO.		4'X6' ACOUSTICAL PERFORATED PANELS (ACP-3)		18"X18" ACCESS PANEL. COORDINATE LOCATION WITH 'H' DWGS
	EXIT SIGN. SEE 'E' DWGS FOR ADDITIONAL INFO.		CLG. DIFFUSER AIR GRILLE. SEE 'H' DWGS FOR ADDITIONAL INFO.		ACOUSTICAL PERFORATED PANELS (ACP-4)		
	4" SQUARE LED DOWN LIGHT FIXTURE. SEE 'E' DWGS FOR ADDITIONAL INFO.		CLG. RETURN AIR GRILLE. SEE 'H' DWGS FOR ADDITIONAL INFO.		1" THICK METAL ACOUSTICAL BLADES (ACB-1)		
	2'X2' ACOUSTICAL CEILING PANEL (ACP-1)		CONCEALED SPRINKLER HEAD. SEE 'SP' DWGS FOR ADDITIONAL INFO.		2" THICK ACOUSTICAL BLADES (ACB-2)		
	GYPSUM CEILING (PAINT) (GYP)	S	SMOKE DETECTOR. SEE 'E' DWGS FOR ADDITIONAL INFO.		2" THICK METAL ACOUSTICAL BLADES (ACB-3)		

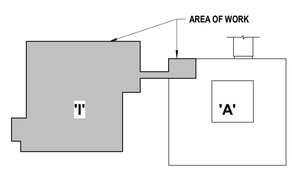

Key Plan
Scale: N.T.S.

H2M architects + engineers
538 Broad Hollow Road, 4th Floor East
Melville, NY 11747
631.756.8000 • www.h2m.com
Architecture & Landscape Architecture: No Certificate Required
Engineering Certificate of Authorization No.: 0018178

CONSULTANTS:

MARK	DATE	DESCRIPTION

KEVIN M. MEDLER, R.A.
N.Y. PROFESSIONAL ARCHITECT Lic. No. 038379

DESIGNED BY:	DRAWN BY:	CHECKED BY:	REVIEWED BY:
CWP	DOD/NPO	CWP/KMM	
PROJECT No: WPSD 2203	DATE: MARCH 2025	SCALE: AS SHOWN	

CLIENT
WHITE PLAINS CITY SCHOOL DISTRICT

ADDITION AT WHITE PLAINS HIGH SCHOOL

550 NORTH STREET, WHITE PLAINS, NY 10605

66-22-00-01-0-016-030

CONTRACT
CONTRACT G
GENERAL CONSTRUCTION

STATUS
FINAL BID SET

SHEET TITLE
FIRST FLOOR REFLECTED CEILING PLAN & NOTES

DRAWING No.
A 121.00

C:\Users\ddesouza\Documents\WPSD2203_Ceiling21_A_DDeSouzaDRT18.rvt

3/6/2025 2:46:31 PM

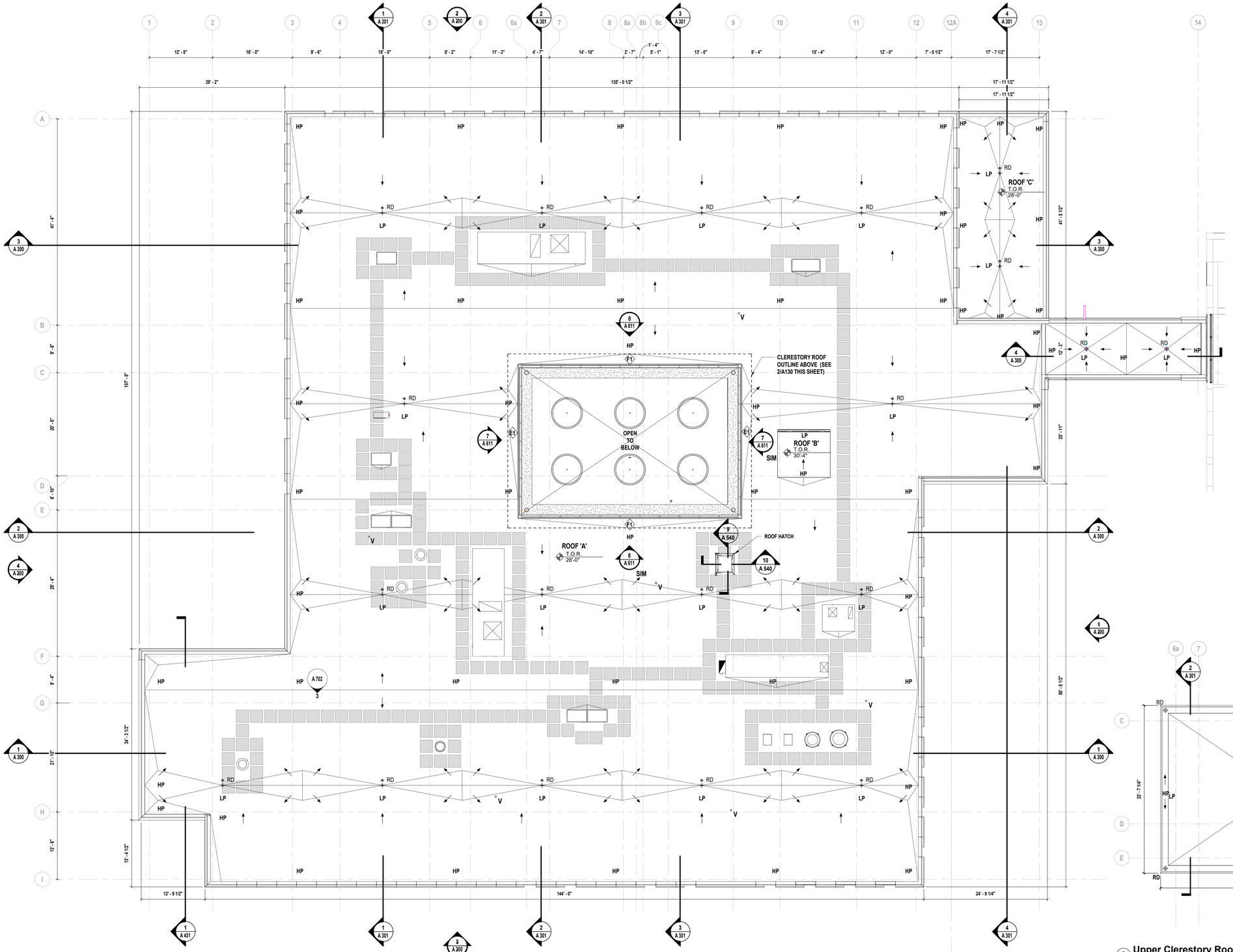

1 **Building Roof Plan**
SCALE: 1/8" = 1'-0"

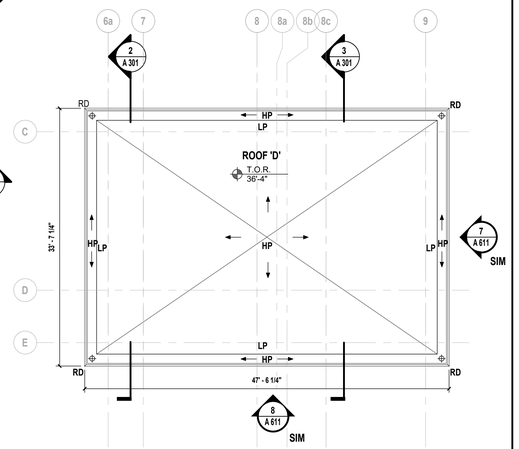

2 **Upper Clerestory Roof Plan**
SCALE: 1/8" = 1'-0"

ROOF PLAN NOTES

1. THIS DRAWING SERVES AS A DEPICTION OF PRINCIPAL ROOFING ITEMS AND IS NOT A COMPLETE LIST OF EVERY ROOFING ITEM AND ACCESSORY. THIS DRAWING MUST BE COORDINATED WITH ALL OTHER DRAWINGS, ROOF DETAILS AND WITH ALL ITEMS SPECIFIED.
2. CONTRACT 'G' IS RESPONSIBLE FOR PROVIDING ALL MATERIALS, LABOR, ROOFING ITEMS AND ACCESSORIES REQUIRED FOR A COMPLETE, WEATHER TIGHT AND WARRANTEE INSTALLATION WHETHER OR NOT ITEMS MAY BE INDICATED ON THE DRAWINGS.
3. COORDINATE THE WORK REQUIRED ON THIS DRAWING WITH ALL STRUCTURAL, CIVIL, ARCHITECTURAL, MECHANICAL, PLUMBING AND ELECTRICAL DRAWINGS, AND SPECIFICATIONS.
4. COORDINATE AND VERIFY EXACT LOCATIONS OF PENETRATIONS TO BE MADE IN ALL ROOFS AND ROOF ASSEMBLIES.
5. CONTRACT 'G' SHALL REVIEW, COORDINATE, AND INSTALL SLEEVES AND LOCATE ALL MECHANICAL PENETRATIONS REQUIRED TO ACCOMMODATE ALL WORK DETAILED OR SPECIFIED.
6. CONTRACT 'G' IS RESPONSIBLE TO MAKE AND PROPERLY FLASH ALL ROOF PENETRATIONS. THE CONTRACTOR IS RESPONSIBLE FOR PROVIDING AND INSTALLING ALL FLASHING FOR ALL ROOF PENETRATIONS IN ACCORDANCE WITH ROOFING MANUFACTURER'S WARRANTY REQUIREMENTS AND SPECIFICATIONS UNLESS NOTED OTHERWISE.
7. CONTRACT 'G' SHALL PROVIDE ALL TEMPORARY ROOF FLASHING WORK AS REQUIRED. IT IS THE RESPONSIBILITY OF THE CONTRACTOR TO MAINTAIN A WEATHER TIGHT ROOF AT ALL TIMES.
8. PROVIDE MINIMUM ROOF PITCHES AS INDICATED ON PLAN.
10. PROVIDE CRICKETS BEHIND ALL ROOFING ITEMS TO PROVIDE PITCH AND PREVENT PONDING. MODIFY AREAS OF WORK AS NECESSARY TO KEEP POSITIVE DRAINAGE.
11. CONTRACT 'G' SHALL PROVIDE ADEQUATE TEMPORARY DRAINAGE FOR ALL PORTIONS OF THE ROOF, THROUGHOUT THE ENTIRE DURATION OF THE PROJECT.
12. CONTRACT 'M' SHALL FURNISH SLEEVES AND LOCATE ALL MECHANICAL PENETRATIONS REQUIRED TO ACCOMMODATE ALL WORK DETAILED OR SPECIFIED.
13. CONTRACT 'M' SHALL FURNISH ALL CURBS FOR EXHAUST FANS, AND HEATING/COOLING UNITS TO CONTRACT 'G' FOR INSTALLATION.
14. ROOFING INSTALLATION SHALL INCLUDE PROVIDING ALL PENETRATIONS FOR ALL ITEMS NECESSARY, WHETHER SHOWN OR NOT, AND SHALL ALSO INCLUDE TERMINATIONS AND FLASHING AS REQUIRED TO PROVIDE WARRANTED SYSTEMS IN ACCORDANCE WITH THE SPECIFIED WARRANTY REQUIREMENTS.
15. CONTRACT 'G' IS RESPONSIBLE FOR ALL DAMAGES TO THE INTERIOR AND EXTERIOR OF THE BUILDING THAT RESULTED FROM AND DURING ROOFING INSTALLATION, INCLUDING BUT NOT LIMITED TO, ADHESIVE DRIPPINGS, WATER LEAKS, ETC.

ROOF SYMBOL LEGEND

	ROOF ACCESS HATCH	RD	ROOF DRAIN (LOW POINT) W/ PRIMARY AND OVERFLOW - COORDINATE WITH 'P' DRAWINGS
	ROOF TOP UNIT		ROOF MOUNTED EXHAUST FAN (TYP.). CONTRACT 'M' TO PROVIDE METAL CURBS FOR INSTALLATION BY CONTRACT 'G'. COORDINATE WITH 'M' DRAWINGS.
	EPDM ROOFING SYSTEM	V	VENT - SEE 'M' AND 'P' DRAWINGS
LP / HP	LOW POINT / HIGH POINT OF ROOF	PP	PITCH POCKET
	ROOF PITCH - 1/4" PER FOOT, MINIMUM, U.N.O.		WALKWAY PADS - FINAL LOCATION AND TO BE DETERMINED IN FIELD WITH OWNER/ARCHITECT
	.050 ALUMINUM COPING SYSTEM		

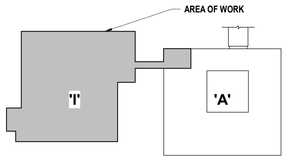

Key Plan
Scale: N.T.S.

H2M architects + engineers
538 Broad Hollow Road, 4th Floor East
Melville, NY 11747
631.756.8000 • www.h2m.com
Architecture & Landscape Architecture: No Certificate Required
Engineering Certificate of Authorization No.: 0018178

CONSULTANTS:

MARK	DATE	DESCRIPTION

REGISTERED ARCHITECT KEVIN MICHAEL MEDLER 038379 STATE OF NEW YORK

KEVIN M. MEDLER, R.A.
NY PROFESSIONAL ARCHITECT Lic. No. 038379
THE PROFESSIONAL STAMP DOCUMENT SHALL NOT BE ALTERED BY ANYONE OTHER THAN THE LICENSED PROFESSIONAL IN CHARGE.

DESIGNED BY:	DRAWN BY:	CHECKED BY:	REVIEWED BY:
CWP	DOD/NPO	CWP/KMM	
PROJECT No: WPSD 2203	DATE: MARCH 2025	SCALE: AS SHOWN	

CLIENT
WHITE PLAINS CITY SCHOOL DISTRICT

ADDITION AT WHITE PLAINS HIGH SCHOOL

550 NORTH STREET, WHITE PLAINS, NY 10605

66-22-00-01-0-016-030

CONTRACT
CONTRACT G
GENERAL CONSTRUCTION

STATUS
FINAL BID SET

SHEET TITLE
ROOF PLAN

DRAWING No.
A 130.00

C:\Users\ddesouza\Documents\WPSD2203_Central21_A_2DwSouza3DRTUB.rvt

3/6/2025 2:46:44 PM

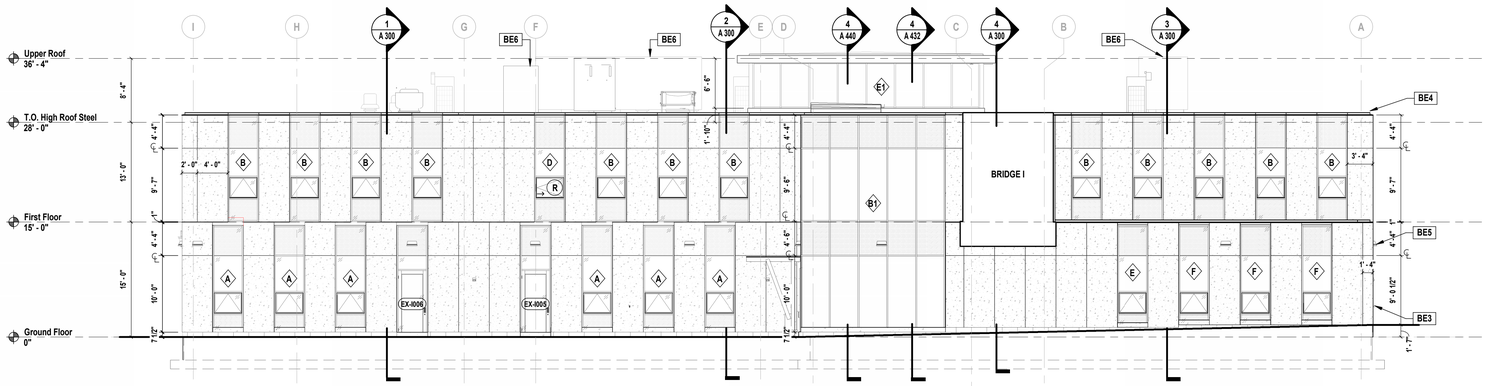

1 BUILDING ELEVATION SOUTH
SCALE: 1/8" = 1'-0"

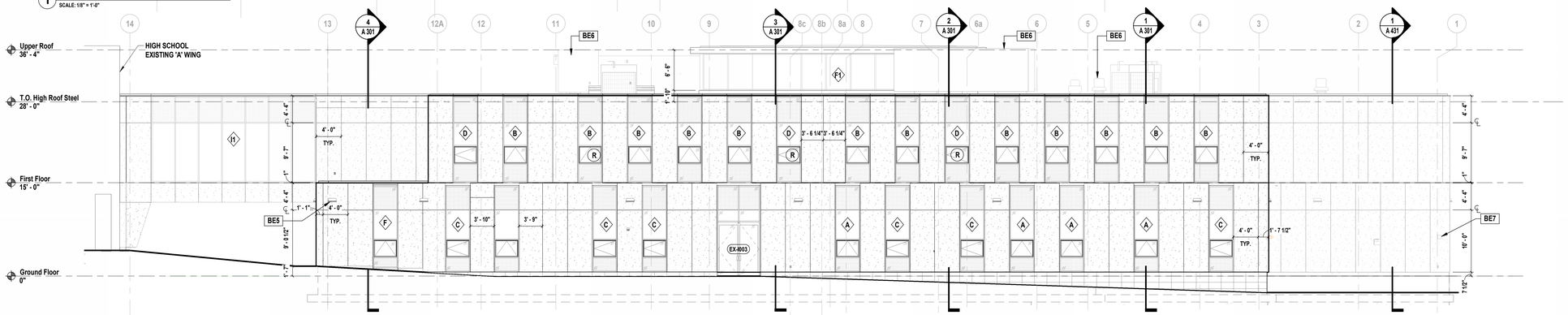

2 BUILDING ELEVATION EAST
SCALE: 1/8" = 1'-0"

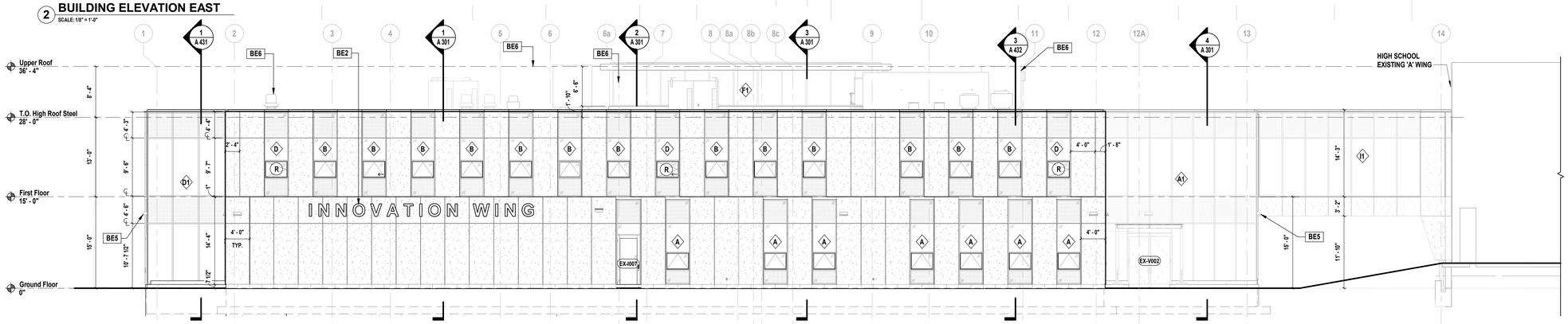

3 BUILDING ELEVATION WEST
SCALE: 1/8" = 1'-0"

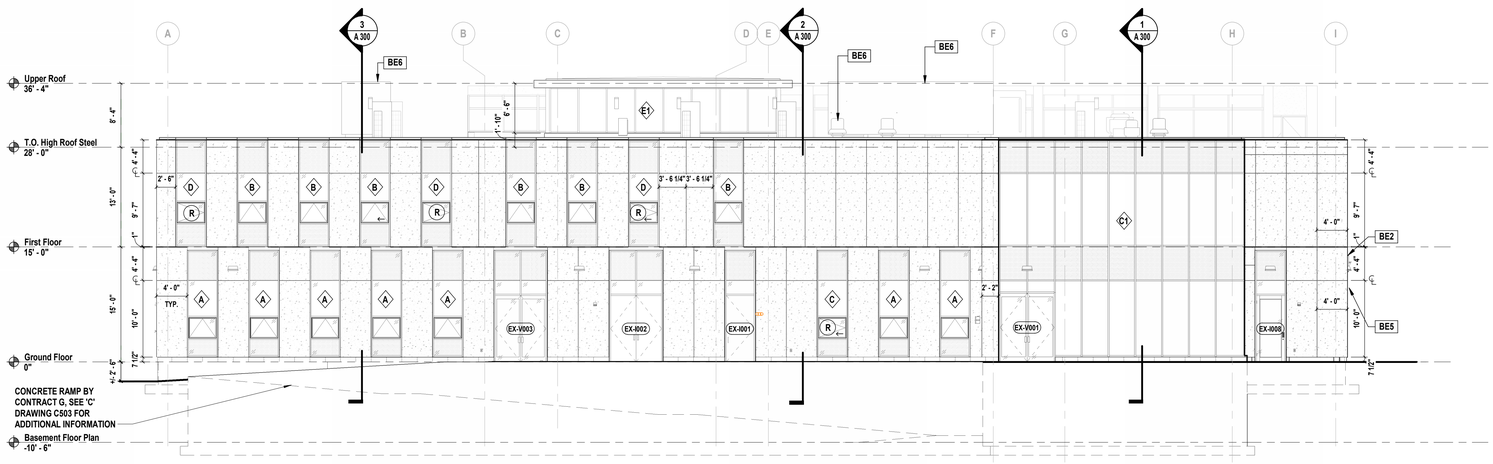

4 BUILDING ELEVATION NORTH
SCALE: 1/8" = 1'-0"

ELEVATION GENERAL NOTES

1. COORDINATE THE WORK INDICATED HERE WITH ALL CONTRACT DOCUMENTS AND SPECIFICATIONS.
2. ALL PAINTING SHALL BE PERFORMED IN ACCORDANCE WITH THE REQUIREMENTS CONTAINED IN SECTION 099000 OF THE PROJECT MANUAL.
3. FOR DOORS DENOTED, (—) REFER TO DOOR SCHEDULE FOR ADDITIONAL INFORMATION.
4. FOR WINDOWS DENOTED (◇), REFER TO WINDOW SCHEDULE FOR ADDITIONAL INFORMATION.
5. FOOTING AND FOUNDATION DEPTHS, SIZES, ETC. PROVIDED IN ELEVATIONS ARE FOR DIAGRAMMATIC PURPOSES ONLY. SEE 'S' DRAWINGS FOR ACTUAL SIZES.

BUILDING ELEVATION KEYNOTES

NOTE	SCOPE OF WORK
BE1	5/8" ARCHITECTURAL ULTRA HIGH PERFORMANCE CONCRETE PANEL.
BE2	RAIL MOUNTED ALUMINUM LETTER SIGNAGE. 24" HIGH X 2" DEEP LED BACKLIT.
BE3	HOSE BIBB, REFER TO 'P' DRAWINGS FOR ADDITIONAL INFORMATION.
BE4	CUSTOM ROOF COPING, REFER TO A500 SERIES.
BE5	LIGHT FIXTURE, REFER TO 'E' DRAWINGS FOR ADDITIONAL INFORMATION.
BE6	MECHANICAL EQUIPMENT - SEE 'M' DRAWINGS FOR ADDITIONAL INFORMATION.
BE7	HIGH-SECURITY KEY LOCK BOX. REFER TO SPECIFICATIONS FOR ADDITIONAL INFORMATION.

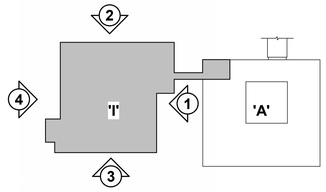

Key Plan
Scale: N.T.S.

H2M architects + engineers
538 Broad Hollow Road, 4th Floor East
Melville, NY 11747
631.756.8000 • www.h2m.com
Architecture & Landscape Architecture: No Certificate Required
Engineering Certificate of Authorization No.: 0018178

CONSULTANTS:

MARK	DATE	DESCRIPTION
2	01-10-2025	SED ADDENDUM 2

REGISTERED ARCHITECT KEVIN MICHAEL MEDLER 038379 STATE OF NEW YORK

07/01/2024
Exp. Date

KEVIN M. MEDLER, R.A.
NY PROFESSIONAL ARCHITECT Lic. No. 038379
"No transfer of this document except by a licensed professional is a violation."

DESIGNED BY:	DRAWN BY:	CHECKED BY:	REVIEWED BY:
CWP	DOD/NPO	CWP/KMM	
PROJECT No:	DATE:	SCALE:	
WPSD 2203	MARCH 2025	AS SHOWN	

CLIENT
WHITE PLAINS CITY SCHOOL DISTRICT

ADDITION AT WHITE PLAINS HIGH SCHOOL

White Plains Public Schools WP REAL LIFE LEARNING

550 NORTH STREET, WHITE PLAINS, NY 10605

66-22-00-01-0-016-030

CONTRACT
CONTRACT G
GENERAL CONSTRUCTION

STATUS
FINAL BID SET

SHEET TITLE
BUILDING ELEVATIONS

DRAWING No.
A 200.00

C:\Users\ddesouza\Documents\WPSD2203_Central21_A_DDeSouza\D8TU8.rvt
3/6/2025 2:47:39 PM

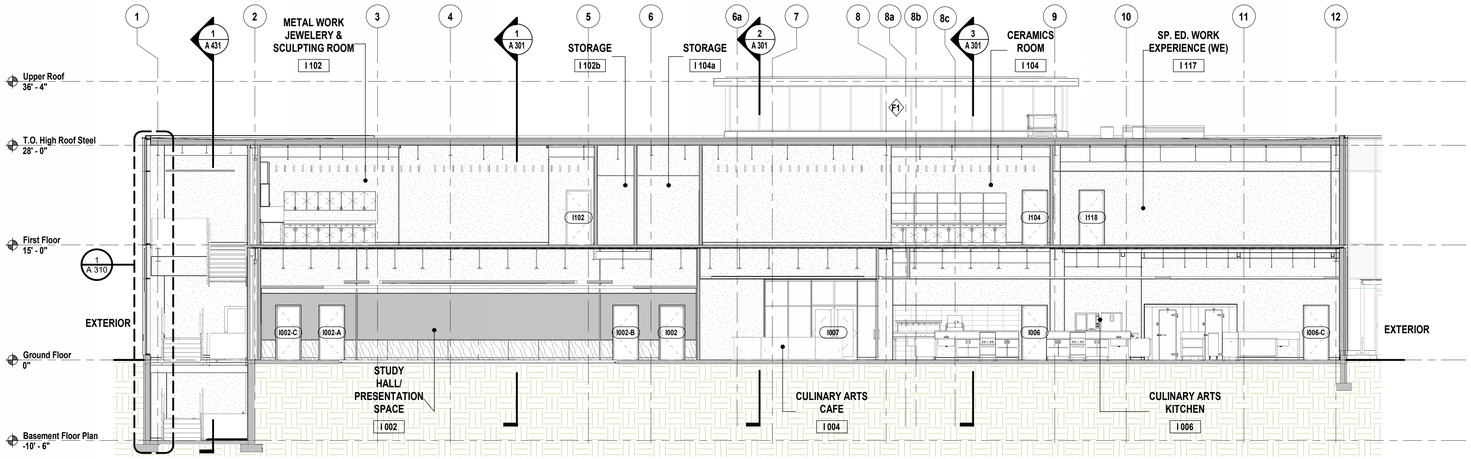

1 Building Section A
SCALE: 1/8" = 1'-0"

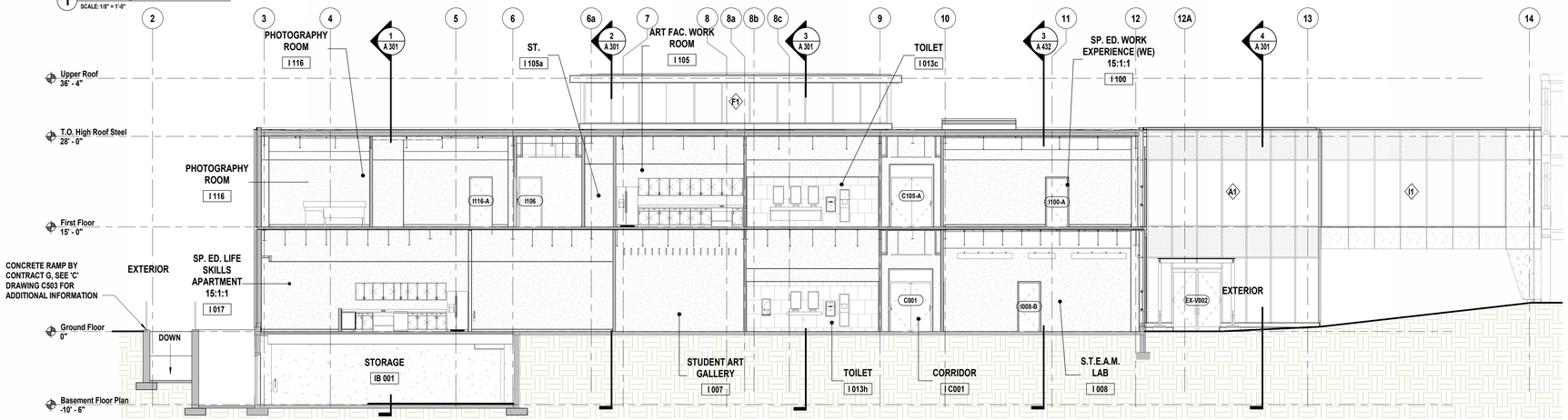

2 Building Section B
SCALE: 1/8" = 1'-0"

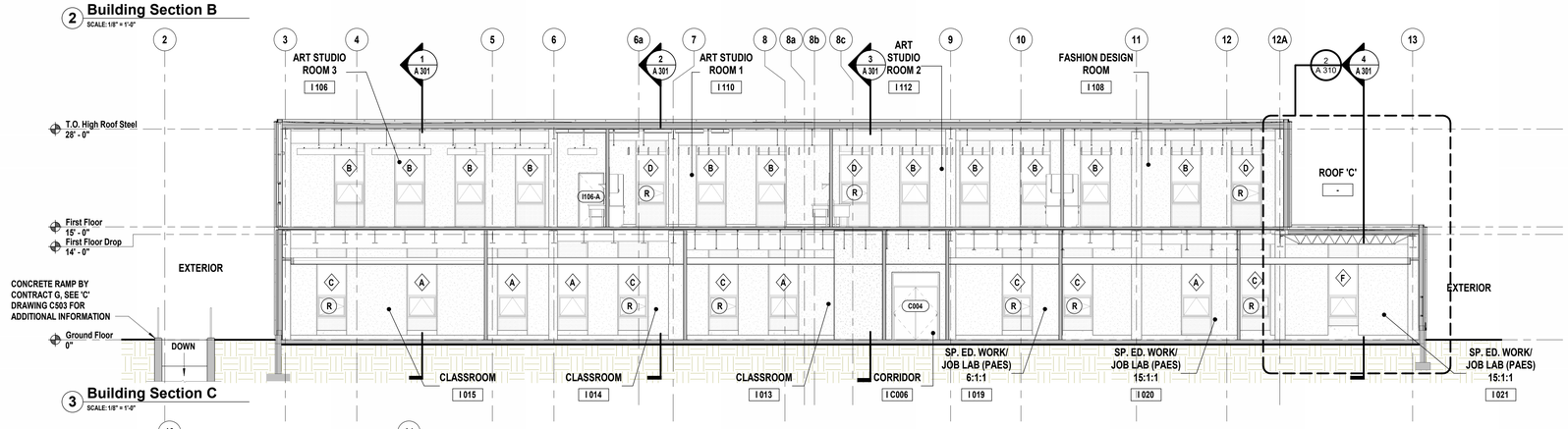

3 Building Section C
SCALE: 1/8" = 1'-0"

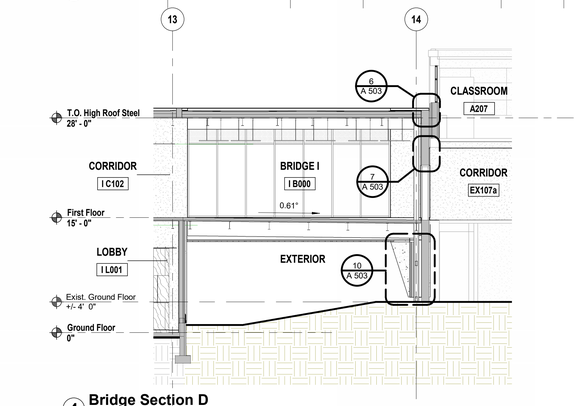

4 Bridge Section D
SCALE: 1/8" = 1'-0"

BUILDING SECTION GENERAL NOTES

1. REINFORCED P.C. SLAB ON MINIMUM 6" TYPE 'C' CONTROLLED FILL AND 10 MIL VAPOR BARRIER ON COMPACTED SUB-GRADE (TYP. ALL INTERIOR SLABS). SEE 'S' DRAWING FOR SLAB THICKNESS AND REINFORCING, FINISH AS SCHEDULED. SEE 'S' DRAWINGS FOR SLAB THICKNESS AND REINFORCING, FINISH AS SCHEDULED.
2. REINFORCED P.C. SLAB ON GALVANIZED METAL DECK. SEE 'S' DRAWINGS FOR DE INFORMATION, SLAB THICKNESS AND REINFORCING.
3. STRUCTURAL INFORMATION SHOWN IN SECTIONS IS DIAGRAMMATIC, SEE 'S' DRAWING FOR SPECIFIC INFORMATION.
4. ALL FIRE RATED WALLS ARE TO HAVE A CONTINUOUS FIRE RATING FROM TOP OF SLAB TO BOTTOM OF ROOF DECK OR FLOOR DECK ABOVE. (SPRAY FIREPROOFING HAS BEE OMITTED FROM SECTIONS AND DETAILS FOR CLARITY) ALL PENETRATIONS IN FIRE RATED WALLS AS WELL AS THEIR JUNCTURE AT TOP OF WALL BELOW ROOF DECK ARE TO BE FIRESTOP WITH AN APPROPRIATE APPROVED FIRESTOPPING MATERIALS.
5. SEE DRAWING G100.00 & A000.00 FOR ALL FIRE RATING INFORMATION, LOCATION OF SPRAY ON FIREPROOFING AND ADDITIONAL INFORMATION. WHERE STEEL FRAMING INTERSECTS WALLS MID-SPAN, FLEXIBLE INTUMESCENT FIRE BLOCK MATERIAL SHALL BE PROVIDED, AS REQ'D TO FILL ALL ANNULAR SPACES COMPLETELY AND MAINTAIN DESIRED FIRE RATING, TYP.
6. FOR ALL WALL TYPES, SEE DRAWING A000.00.
7. FOR ALL WINDOWS DENOTED AS ◇ SEE DRAWINGS A610.00 FOR ADDITION INFORMATION.
8. FOR ALL DOORS DENOTED AS ( ) SEE DRAWING A620.00 FOR ADDITIONAL INFORMATION.
9. FULLY ADHERED 60 MIL EPDM ROOFING MEMBRANE. SEE A130.00 & A540.00 FOR ADDITIONAL INFORMATION.
10. OPEN WEB STEEL JOISTS, SEE 'S' DRAWINGS FOR SIZE AND SPACING.
11. SPRAY ON FIRE PROOFING TO STEEL STRUCTURE AND METAL FLOOR DECK.

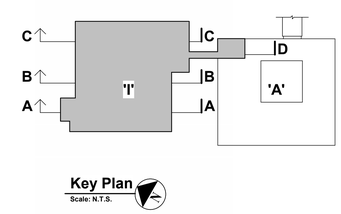

Key Plan
Scale: N.T.S.

H2M architects + engineers
538 Broad Hollow Road, 4th Floor East
Melville, NY 11747
631.756.8000 • www.h2m.com
Architecture & Landscape Architecture: No Certificate Required
Engineering Certificate of Authorization No.: 0018178

CONSULTANTS:

MARK	DATE	DESCRIPTION
2	01-10-2025	SED ADDENDUM 2

KEVIN M. MEDLER, R.A.
BY PROFESSIONAL ARCHITECT LIC. No. 038379
"ALTERATION TO THIS DOCUMENT EXCEPT BY LICENSED PROFESSIONAL IS ILLEGAL"
Exp. Date 07/31/2024

DESIGNED BY:	DRAWN BY:	CHECKED BY:	REVIEWED BY:
CWP	DOD/NPO	CWP	-
PROJECT No: WPSD 2203	DATE: MARCH 2025	SCALE: AS SHOWN	

CLIENT
WHITE PLAINS CITY SCHOOL DISTRICT

ADDITION AT WHITE PLAINS HIGH SCHOOL

550 NORTH STREET, WHITE PLAINS, NY 10605

66-22-00-01-0-016-030

CONTRACT
CONTRACT G
GENERAL CONSTRUCTION

STATUS
FINAL BID SET

SHEET TITLE
BUILDING SECTIONS

DRAWING No.
A 300.00

C:\Users\ddesouza\Documents\WPSD2023_Central21_A_DDdSouzaDRTUB.rvt
3/6/2025 2:47:52 PM

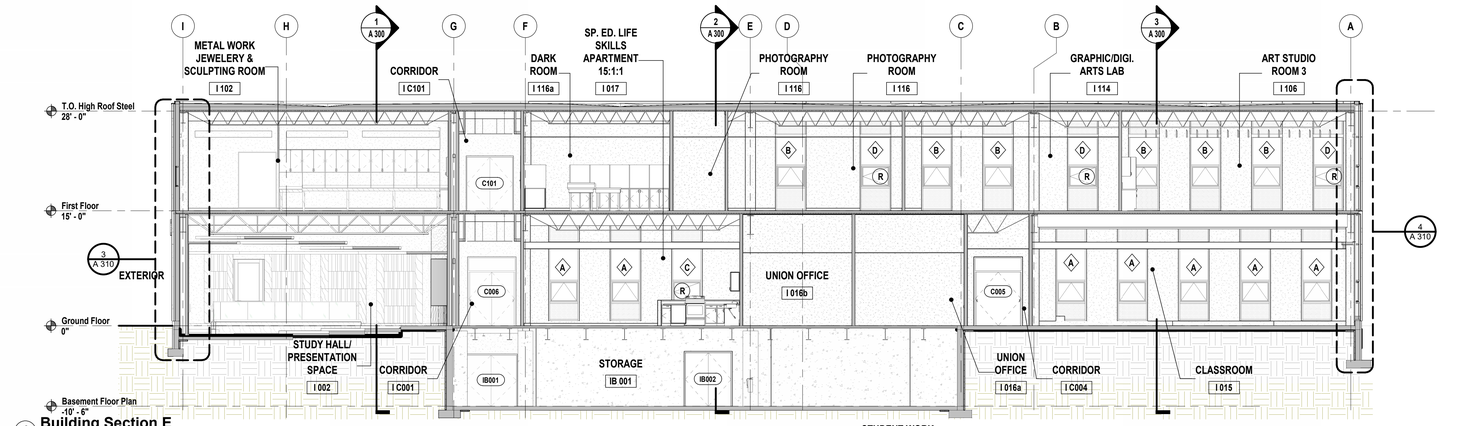

1 Building Section E
SCALE: 1/8" = 1'-0"

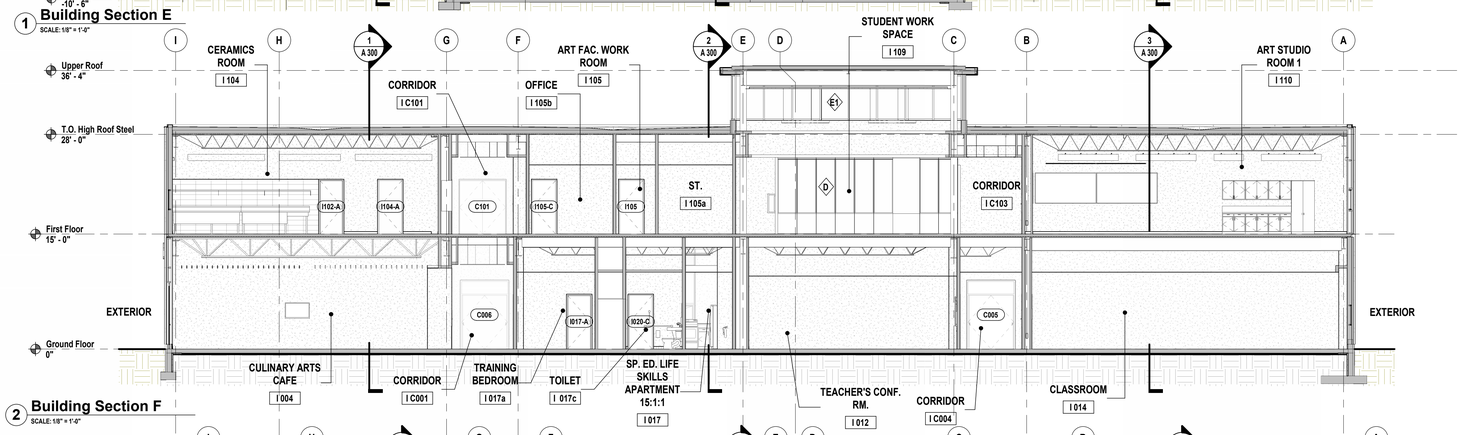

2 Building Section F
SCALE: 1/8" = 1'-0"

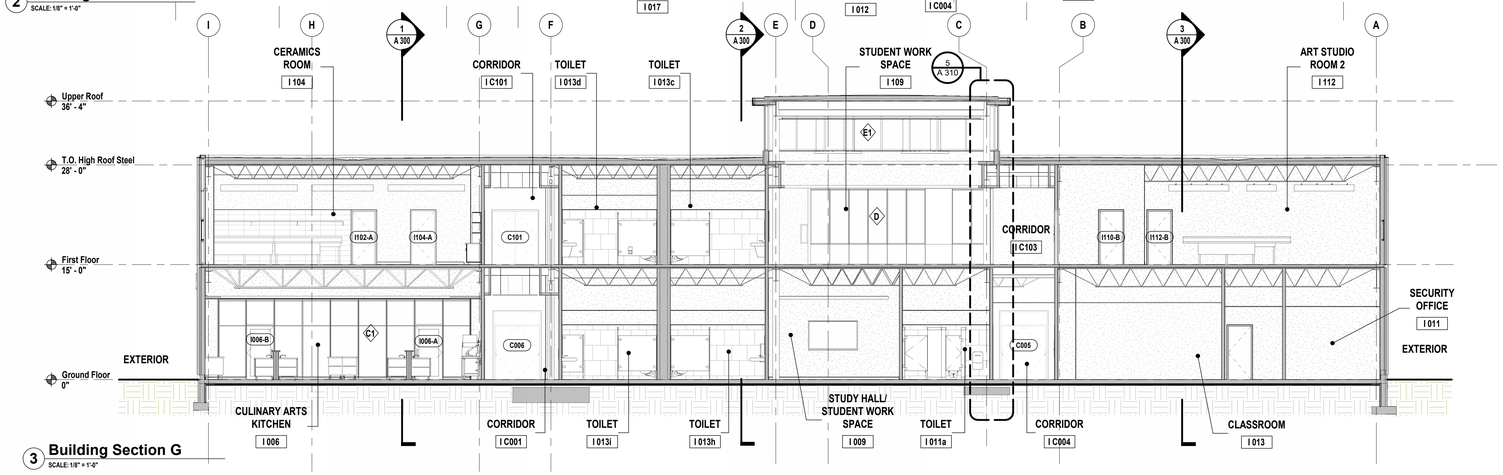

3 Building Section G
SCALE: 1/8" = 1'-0"

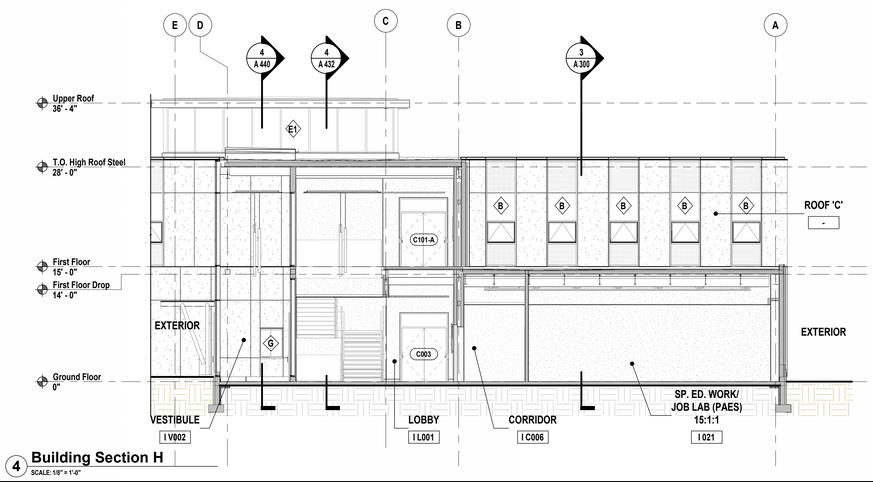

4 Building Section H
SCALE: 1/8" = 1'-0"

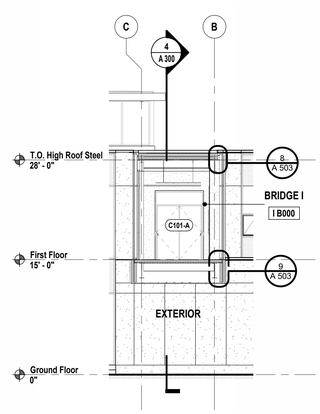

5 Building Section I
SCALE: 1/8" = 1'-0"

BUILDING SECTION GENERAL NOTES

1. REINFORCED P.C. SLAB ON MINIMUM 6" TYPE 'C' CONTROLLED FILL AND 10 MIL VAPOR BARRIER ON COMPACTED SUB-GRADE (TYP. ALL INTERIOR SLABS). SEE 'S' DRAWING FOR SLAB THICKNESS AND REINFORCING, FINISH AS SCHEDULED. SEE 'S' DRAWINGS FOR SLAB THICKNESS AND REINFORCING, FINISH AS SCHEDULED.
2. REINFORCED P.C. SLAB ON GALVANIZED METAL DECK. SEE 'S' DRAWINGS FOR DE INFORMATION, SLAB THICKNESS AND REINFORCING.
3. STRUCTURAL INFORMATION SHOWN IN SECTIONS IS DIAGRAMMATIC, SEE 'S' DRAWING FOR SPECIFIC INFORMATION.
4. ALL FIRE RATED WALLS ARE TO HAVE A CONTINUOUS FIRE RATING FROM TOP OF SLAB TO BOTTOM OF ROOF DECK OR FLOOR DECK ABOVE. (SPRAY FIREPROOFING HAS BEE OMITTED FROM SECTIONS AND DETAILS FOR CLARITY) ALL PENETRATIONS IN FIRE RATED WALLS AS WELL AS THEIR JUNCTURE AT TOP OF WALL BELOW ROOF DECK ARE TO BE FIRESTOP WITH AN APPROPRIATE APPROVED FIRESTOPPING MATERIALS.
5. SEE DRAWING G100.00 & A000.00 FOR ALL FIRE RATING INFORMATION, LOCATION OF SPRAY ON FIREPROOFING AND ADDITIONAL INFORMATION. WHERE STEEL FRAMING INTERSECTS WALLS MID-SPAN, FLEXIBLE INTUMESCENT FIRE BLOCK MATERIAL SHALL BE PROVIDED, AS REQ'D TO FILL ALL ANNULAR SPACES COMPLETELY AND MAINTAIN DESIRED FIRE RATING, TYP.
6. FOR ALL WALL TYPES, SEE DRAWING A000.00.
7. FOR ALL WINDOWS DENOTED AS ◇ SEE DRAWINGS A610.00 FOR ADDITION INFORMATION.
8. FOR ALL DOORS DENOTED AS (—) SEE DRAWING A620.00 FOR ADDITIONAL INFORMATION.
9. FULLY ADHERED 60 MIL EPDM ROOFING MEMBRANE. SEE A130.00 & A540.00 FOR ADDITIONAL INFORMATION.
10. OPEN WEB STEEL JOISTS, SEE 'S' DRAWINGS FOR SIZE AND SPACING.
11. SPRAY ON FIRE PROOFING TO STEEL STRUCTURE AND METAL FLOOR DECK.

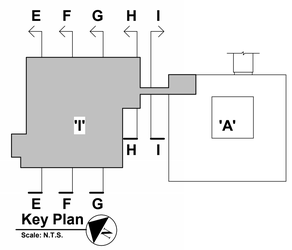

H2M architects + engineers
538 Broad Hollow Road, 4th Floor East
Melville, NY 11747
631.756.8000 • www.h2m.com
Architecture & Landscape Architecture: No Certificate Required
Engineering Certificate of Authorization No.: 0018178

CONSULTANTS:

MARK	DATE	DESCRIPTION
2	01-10-2025	SED ADDENDUM 2

REGISTERED ARCHITECT KEVIN MICHAEL MEDLER 038379 STATE OF NEW YORK

KEVIN M. MEDLER, R.A.
NY PROFESSIONAL ARCHITECT Lic. No. 038379
THE TRANSFERRING OF THIS DOCUMENT EXCEPT BY A LICENSED PROFESSIONAL IS ILLEGAL

DESIGNED BY:	DRAWN BY:	CHECKED BY:	REVIEWED BY:
CWP	DOD/NPO	Checker	-
PROJECT No: WPSD 2203	DATE: MARCH 2025	SCALE: AS SHOWN	

CLIENT
WHITE PLAINS CITY SCHOOL DISTRICT

ADDITION AT WHITE PLAINS HIGH SCHOOL

550 NORTH STREET, WHITE PLAINS, NY 10605

66-22-00-01-0-016-030

CONTRACT
CONTRACT G
GENERAL CONSTRUCTION

STATUS
FINAL BID SET

SHEET TITLE
BUILDING SECTIONS

DRAWING No.
A 301.00

C:\Users\ddesouza\Documents\WPSD2203_Central21_A_DDdSouzaDRT18.rvt

3/6/2025 2:48:09 PM

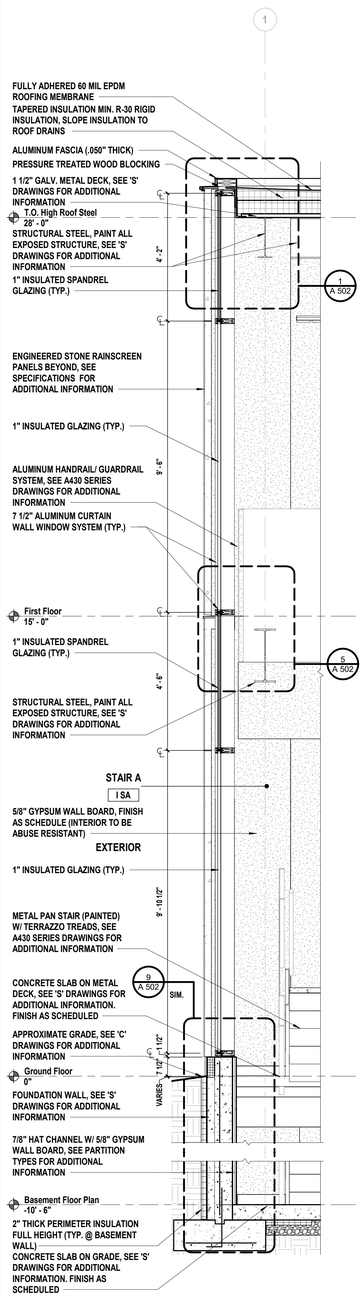

1 **Wall Section**
SCALE: 1/2" = 1'-0"

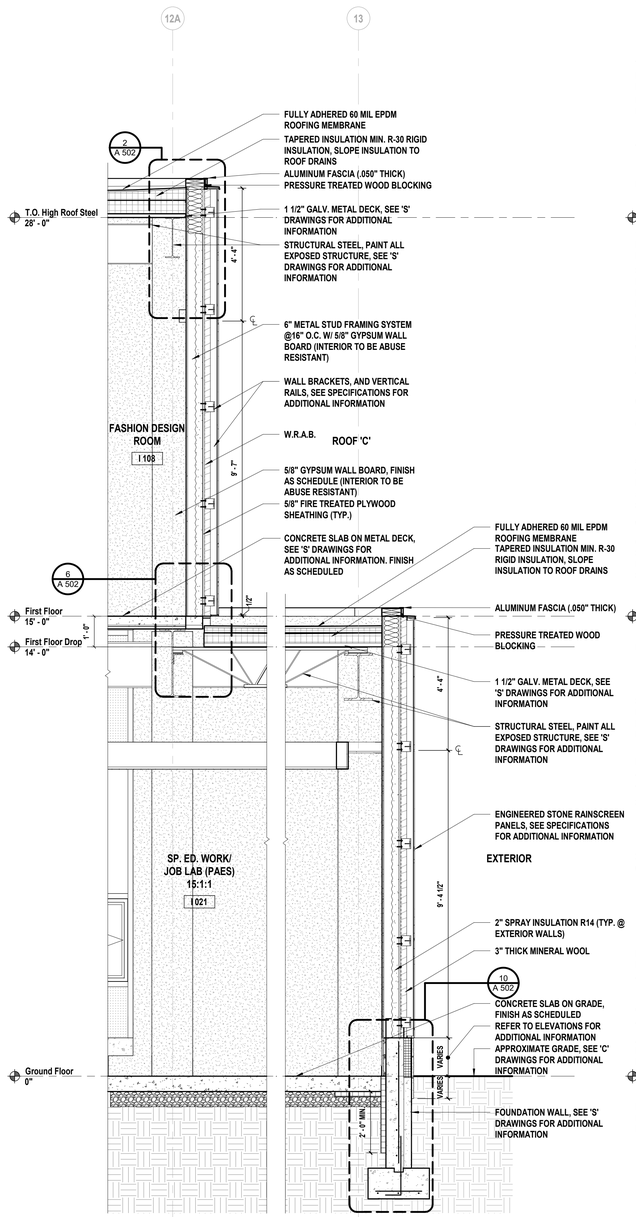

2 **Wall Section**
SCALE: 1/2" = 1'-0"

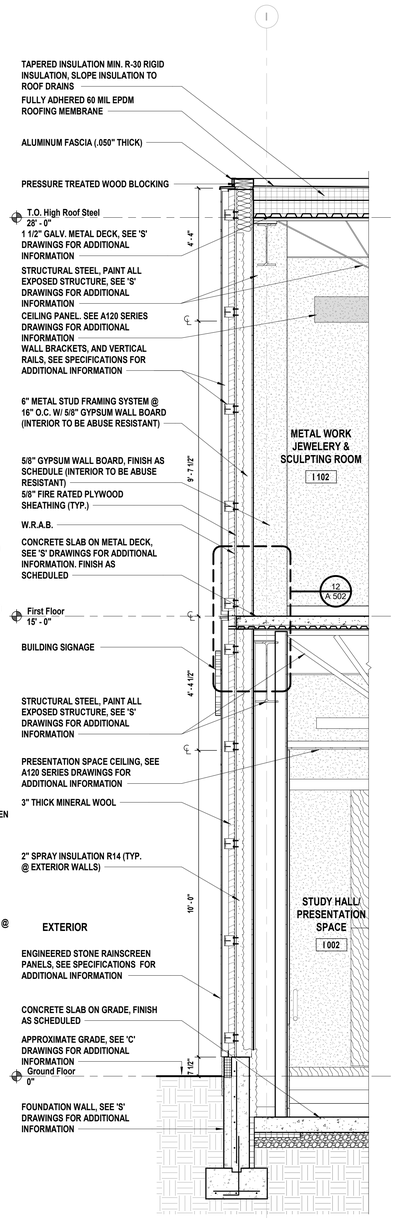

3 **Wall Section**
SCALE: 1/2" = 1'-0"

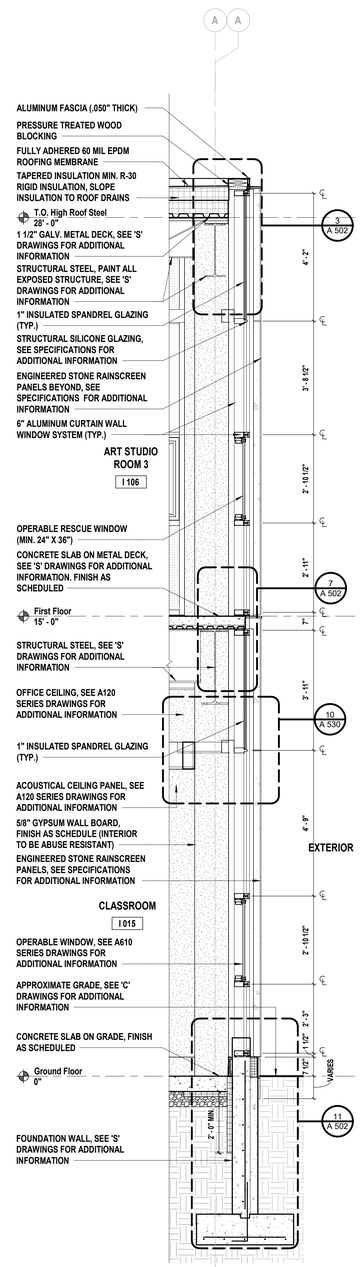

4 **Wall Section**
SCALE: 1/2" = 1'-0"

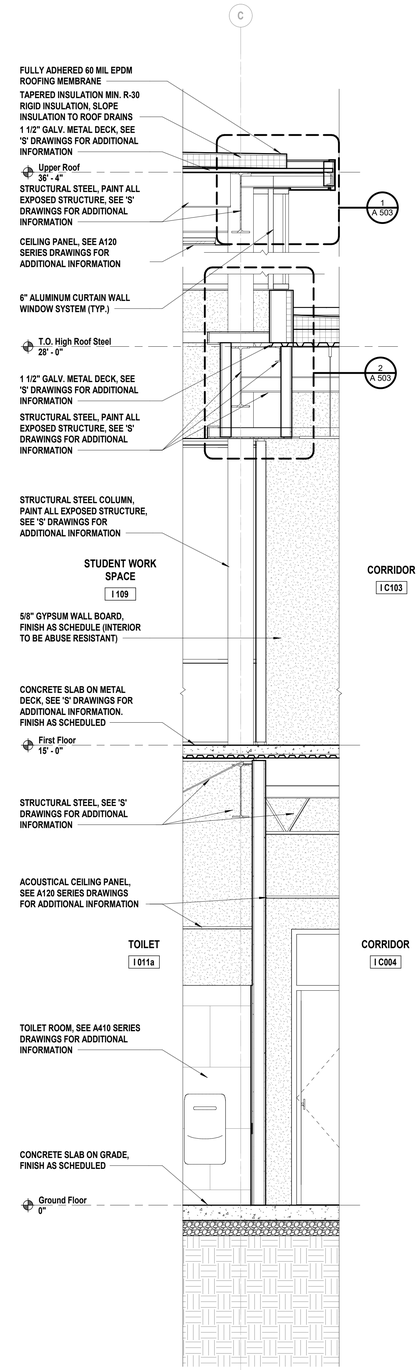

5 **Wall Section**
SCALE: 1/2" = 1'-0"

C:\Users\dsouza\Documents\WPSD2203_Central21_A_DwSouza3ft118.rvt

3/6/2025 2:48:16 PM

H 2 M architects + engineers

538 Broad Hollow Road, 4th Floor East
Melville, NY 11747
631.756.8000 • www.h2m.com
Architecture & Landscape Architecture: No Certificate Required
Engineering Certificate of Authorization No.: 0018178

CONSULTANTS:

MARK	DATE	DESCRIPTION
1	08-23-2024	SED ADDENDUM 1

REGISTERED ARCHITECT KEVIN MICHAEL MEDLER 038379 STATE OF NEW YORK

KEVIN M. MEDLER, R.A.
NY PROFESSIONAL ARCHITECT Lic. No. 038379
THE TRANSFERABILITY AND ACCURACY REMAIN THE RESPONSIBILITY OF THE LICENSED PROFESSIONAL SEALING.

DESIGNED BY:	DRAWN BY:	CHECKED BY:	REVIEWED BY:
CWP	DOD/NPO	Checker	#
PROJECT No: WPSD 2203	DATE: MARCH 2025	SCALE: AS SHOWN	

CLIENT

WHITE PLAINS CITY SCHOOL DISTRICT

ADDITION AT WHITE PLAINS HIGH SCHOOL

550 NORTH STREET, WHITE PLAINS, NY 10605

66-22-00-01-0-016-030

CONTRACT

CONTRACT G
GENERAL CONSTRUCTION

STATUS

FINAL BID SET

SHEET TITLE

WALL SECTIONS

DRAWING No.

A 310.00

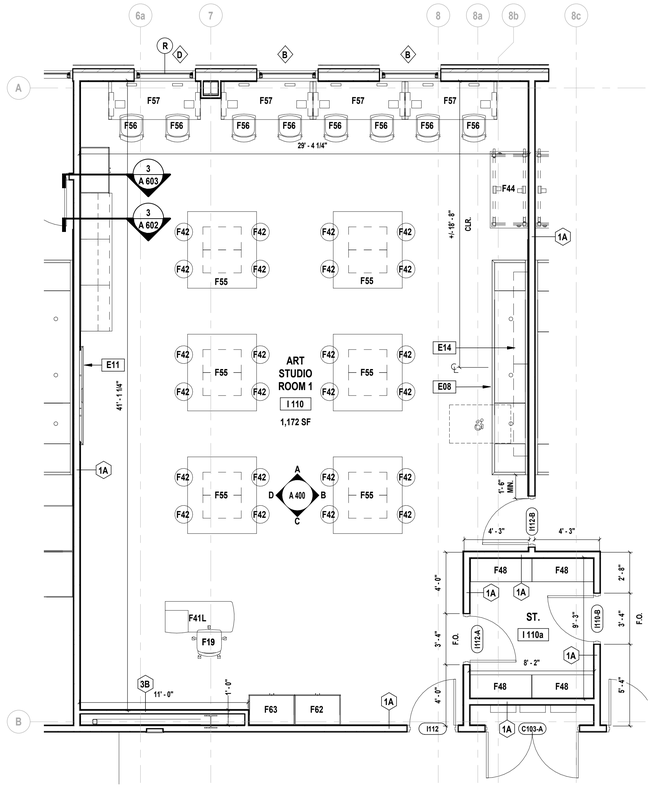

1 Partial Art Studio 1 Floor Plan

SCALE: 1/4" = 1'-0"

NOTE: SIMILAR LAYOUT FOR ART STUDIO ROOM 2 & FASHION DESIGN ROOM, SEE DRAWING A600.00 FOR SPECIALTY EQUIPMENT SCHEDULE.

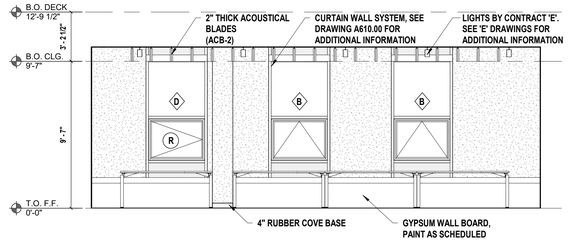

A Interior Elevation

SCALE: 1/4" = 1'-0"

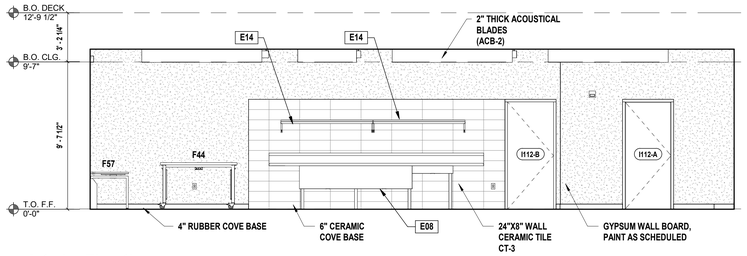

B Interior Elevation

SCALE: 1/4" = 1'-0"

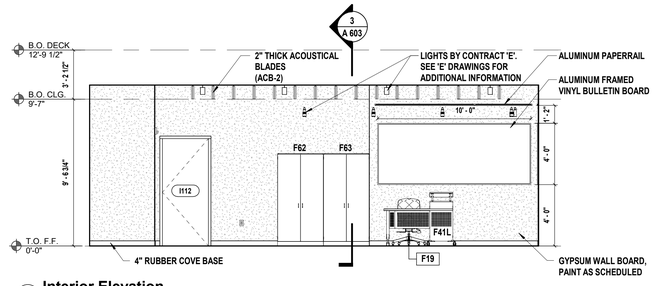

C Interior Elevation

SCALE: 1/4" = 1'-0"

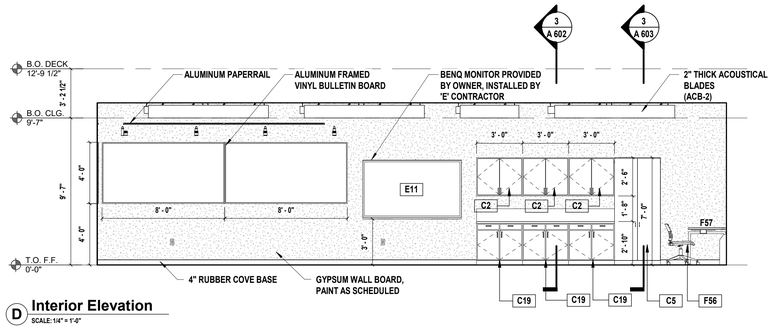

D Interior Elevation

SCALE: 1/4" = 1'-0"

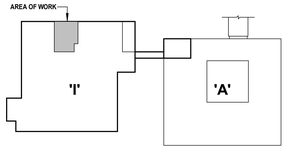

Key Plan

Scale: N.T.S.

H2M architects + engineers

538 Broad Hollow Road, 4th Floor East
Melville, NY 11747
631.756.8000 • www.h2m.com
Architecture & Landscape Architecture: No Certificate Required
Engineering Certificate of Authorization No.: 0018178

CONSULTANTS:

MARK	DATE	DESCRIPTION

KEVIN M. MEDLER, R.A.
NY PROFESSIONAL ARCHITECT Lic. No. 036379

DESIGNED BY:	DRAWN BY:	CHECKED BY:	REVIEWED BY:
CWP	DOD/NPO	Checker	

PROJECT No:	DATE:	SCALE:
WPSD 2203	MARCH 2025	AS SHOWN

CLIENT

WHITE PLAINS CITY SCHOOL DISTRICT

ADDITION AT WHITE PLAINS HIGH SCHOOL

550 NORTH STREET, WHITE PLAINS, NY 10605

66-22-00-01-0-016-030

CONTRACT

CONTRACT G
GENERAL CONSTRUCTION

STATUS

FINAL BID SET

SHEET TITLE

ENLARGED TYPICAL ART ROOM PLAN, ELEVATIONS, AND DETAILS

DRAWING No.

A 400.00

C:\Users\ddesouza\Documents\WPSD2203_Central21_A_DDeSouzaDETUB.rvt
3/6/2025 2:45:24 PM

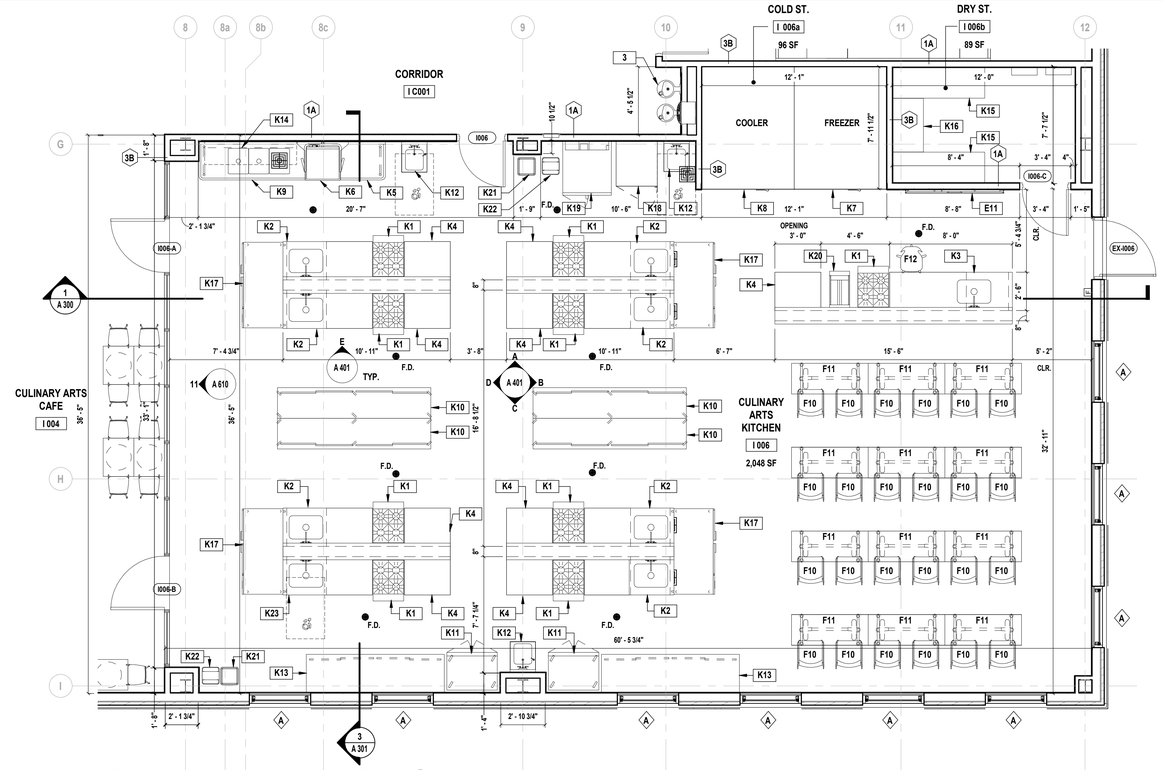

1 **Partial Culinary Arts Kitchen Floor Plan**
SCALE: 1/4" = 1'-0"

NOTE: SEE DRAWING A600.00 FOR SPECIALTY EQUIPMENT SCHEDULE.
SEE DRAWING AT06.00 FOR FURNITURE SCHEDULE.

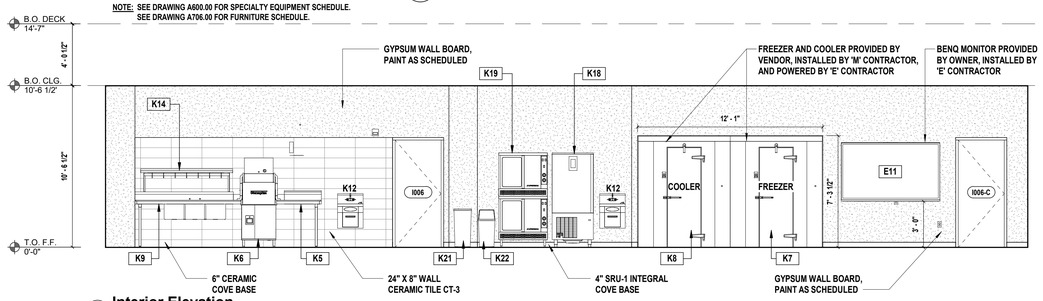

A **Interior Elevation**
SCALE: 1/4" = 1'-0"

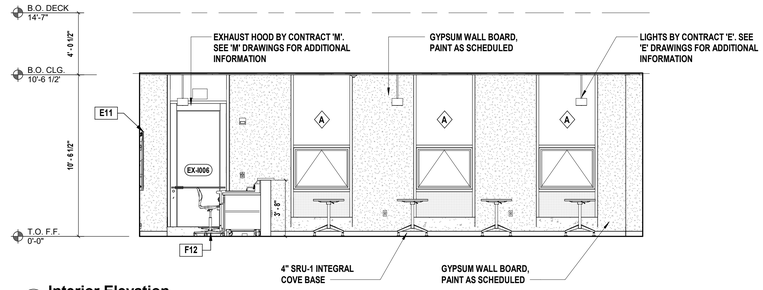

B **Interior Elevation**
SCALE: 1/4" = 1'-0"

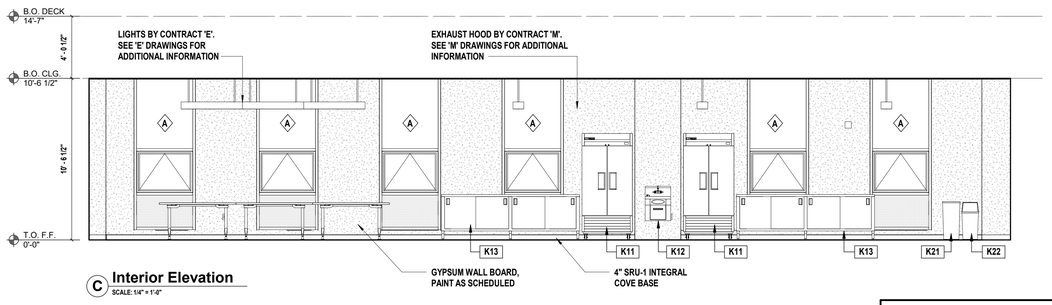

C **Interior Elevation**
SCALE: 1/4" = 1'-0"

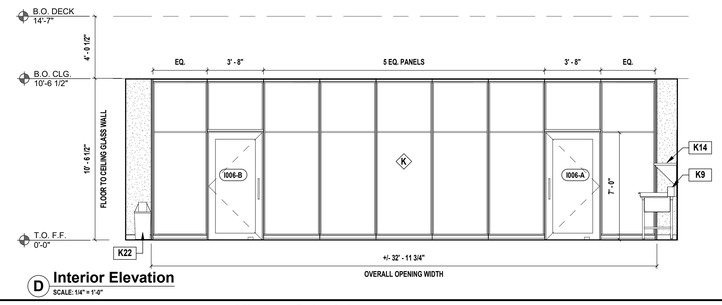

D **Interior Elevation**
SCALE: 1/4" = 1'-0"

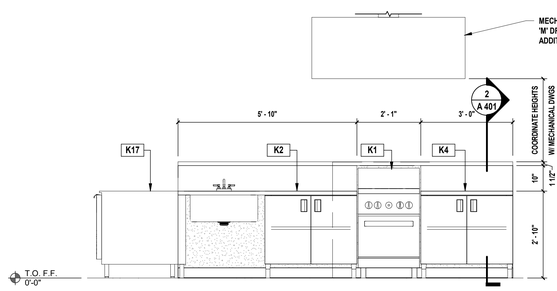

E **Typical Cooking Station Casework**
SCALE: 1/2" = 1'-0"

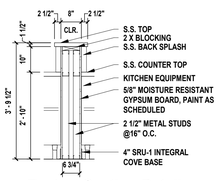

2 **Typical Section Detail**
SCALE: 1/2" = 1'-0"

Kitchen Schedule

Keynote	Description	MODEL	WIDTH	DEPTH	HEIGHT	MATERIAL	COUNTER TOP	LOCKING HARDWARE	BACK SPLASH	SINK	Comments
K1	STOVE WITH FOUR BURNS AND OVEN	GF24-4L1	23 5/8"	34 1/2"	45 3/8"	SS			9 3/8"		
K2	KITCHEN WORKTABLE W/ SINK, ENCLOSED BASE	EB-SS-306	70"	30"	34"	SS	X		10"	X	
K3	KITCHEN WORKTABLE W/ SINK, ENCLOSED BASE	EB-SS-308	96"	30"	34"	SS	X		10"	X	
K4	KITCHEN WORKTABLE, ENCLOSED BASE	HB-SS-303M	36"	30"	34"	SS	X		10"		
K5	CLEAN DISTABLE	DTC-S70-36R	35"	30"	34"	SS	X		10 1/2"		
K6	DISHWASHING MACHINE	DH6000-VHR	34"	31 5/8"	70"	SS					
K7	WALK-IN FREEZER	6X8X7-7 FAST-TRAK	72"	96"	91"	SS		X			REMOTE ROOF TOP UNIT
K8	WALK-IN REFRIGERATOR	6X8X7-7 FAST-TRAK	72"	96"	91"	SS		X			REMOTE ROOF TOP UNIT
K9	CLEAN DISHTABLE W/ 3 COMPARTMENT SINK	DTC-3-1620-84L	34"	30"	83"	SS	X		10 1/2"	X	
K10	KITCHEN WORKTABLE, ENCLOSED BASE	CB-SS-2410M	120"	24"	35 1/2"	SS	X	X	5"		
K11	REACH-IN SOLID SWING DOOR REFRIGERATOR (DOUBLE DOOR)	TS-35-HC	39 1/2"	29 1/2"	78 3/8"	SS		X			
K12	HAND SINK	7-PS-46	20"	24"	27"	SS			8"	X	
K13	KITCHEN WORKABLE, ENCLOSED BASE	CB-SS-309	108"	30"	35 1/2"	SS	X	X	5"		
K14	WALL SHELF	PS-18-72	72"	18"	16 1/2"	SS					
K15	WIRE SHELF	EC-2472	72"	24"	86"	CR					
K16	WIRE SHELF	EC-2442	42"	24"	86"	CR					
K17	UNDERCOUNTER REFRIGERATOR	WTR67AHC	67"	35 3/4"	30"	SS	X				
K18	BLAST CHILLER/SHOCK FREEZER	AP12BCF110-3	32 5/16"	41 1/8"	75"	SS					
K19	ELECTRIC CONVECTION OVENS	ICVDE-2	38"	41 1/2"	74"	SS					
K20	GAS FRYER	GF14	15 5/8"	30 7/8"	41 1/8"	SS					
K21	WASTE RECEPTACLE	B-2280	14 7/8"	14 7/8"	29 1/4"	SS					
K22	RECYCLE RECEPTACLE	B-2250	13 3/8"	13 3/8"	21 3/4"	SS					
K23	KITCHEN WORKTABLE W/ ADA SINK, ENCLOSED BASE	-	70"	30"	34"	SS	X		10"	X	

NOTE: KITCHEN EQUIPMENT BY OTHERS. KITCHEN CONTRACTOR TO COORDINATE ALL EQUIPMENT LOCATION WITH M.E.P. THIS INFORMATION IS TO BE USED FOR COORDINATION.

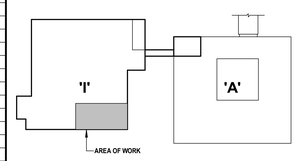

Key Plan
Scale: N.T.S.

H2M architects + engineers
538 Broad Hollow Road, 4th Floor East
Melville, NY 11747
631.756.8000 • www.h2m.com
Architecture & Landscape Architecture: No Certificate Required
Engineering Certificate of Authorization No.: 0018178

CONSULTANTS:

MARK	DATE	DESCRIPTION

KEVIN M. MEDLER, R.A.
NY PROFESSIONAL ARCHITECT Lic. No. 038379

DESIGNED BY:	DRAWN BY:	CHECKED BY:	REVIEWED BY:
CWP	DOD/NPO	CWP	
PROJECT No: WPSD 2203	DATE: MARCH 2025	SCALE: AS SHOWN	

CLIENT
WHITE PLAINS CITY SCHOOL DISTRICT

ADDITION AT WHITE PLAINS HIGH SCHOOL

550 NORTH STREET, WHITE PLAINS, NY 10605

66-22-00-01-0-016-030

CONTRACT
CONTRACT G
GENERAL CONSTRUCTION

STATUS
FINAL BID SET

SHEET TITLE
ENLARGED CULINARY ARTS PLAN, ELEVATIONS, DETAILS & SCHEDULES

DRAWING No.
A 401.00

C:\Users\ddesouza\Documents\WPSD2203_Central21_A_DDnSouzaDBTUB.rvt
3/6/2025 2:48:34 PM

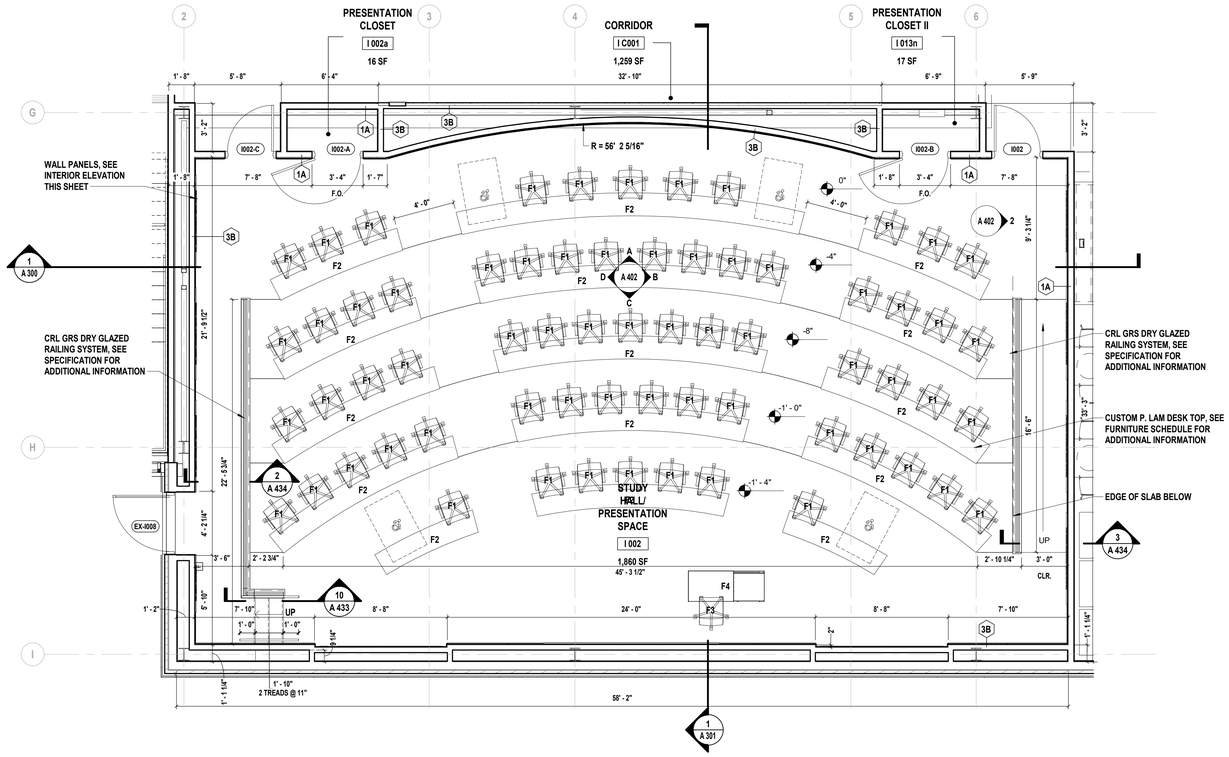

1 Partial Presentation Space Floor Plan

SCALE: 1/4" = 1'-0"

NOTE: SEE DRAWING A600.00 FOR SPECIALTY EQUIPMENT SCHEDULE.
SEE DRAWING A706.00 FOR FURNITURE SCHEDULE.

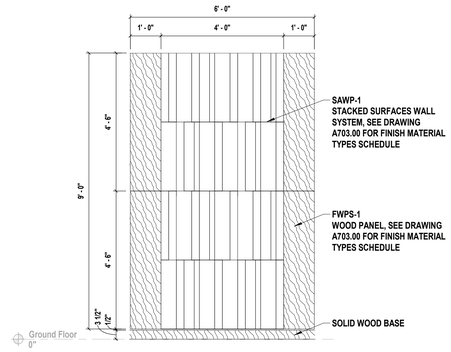

2 Typical Wall Panel System

SCALE: 1/2" = 1'-0"

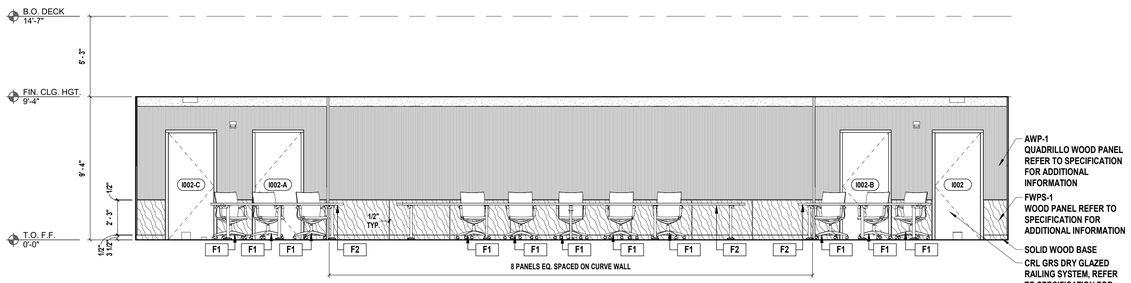

A Interior Elevation

SCALE: 1/4" = 1'-0"

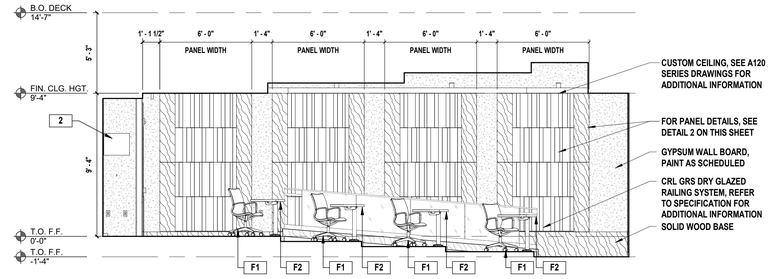

B Interior Elevation

SCALE: 1/4" = 1'-0"

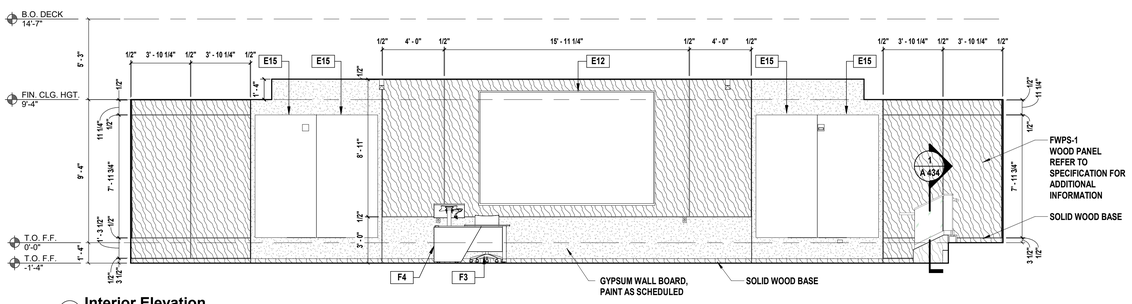

C Interior Elevation

SCALE: 1/4" = 1'-0"

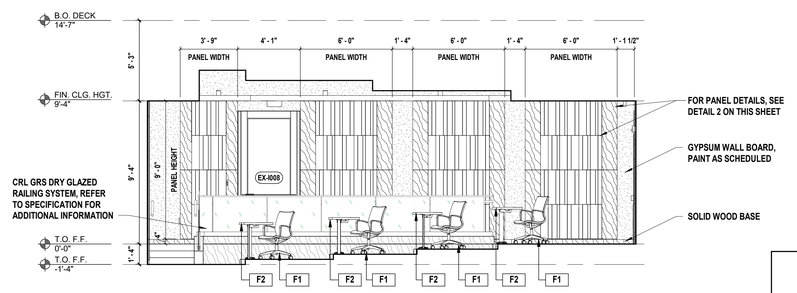

D Interior Elevation

SCALE: 1/4" = 1'-0"

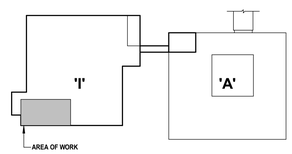

Key Plan
Scale: N.T.S.

H2M architects + engineers
538 Broad Hollow Road, 4th Floor East
Melville, NY 11747
631.756.8000 • www.h2m.com
Architecture & Landscape Architecture: No Certificate Required
Engineering Certificate of Authorization No.: 0018178

CONSULTANTS:

MARK	DATE	DESCRIPTION

KEVIN M. MEDLER, R.A.
NY PROFESSIONAL ARCHITECT Lic. No. 038379

DESIGNED BY:	DRAWN BY:	CHECKED BY:	REVIEWED BY:
CWP	DOD/NPO	CWP	

PROJECT No:	DATE:	SCALE:
WPSD 2203	MARCH 2025	AS SHOWN

CLIENT

WHITE PLAINS CITY SCHOOL DISTRICT

ADDITION AT WHITE PLAINS HIGH SCHOOL

550 NORTH STREET, WHITE PLAINS, NY 10605

66-22-00-01-0-016-030

CONTRACT

CONTRACT G
GENERAL CONSTRUCTION

STATUS

FINAL BID SET

SHEET TITLE

ENLARGED PRESENTATION ROOM PLAN, ELEVATIONS, DETAILS & SCHEDULES

DRAWING No.

A 402.00

C:\Users\ddesouza\Documents\WPSD2203_Central21_A_DDdeSousaDBTLB.rvt

3/6/2025 2:49:43 PM

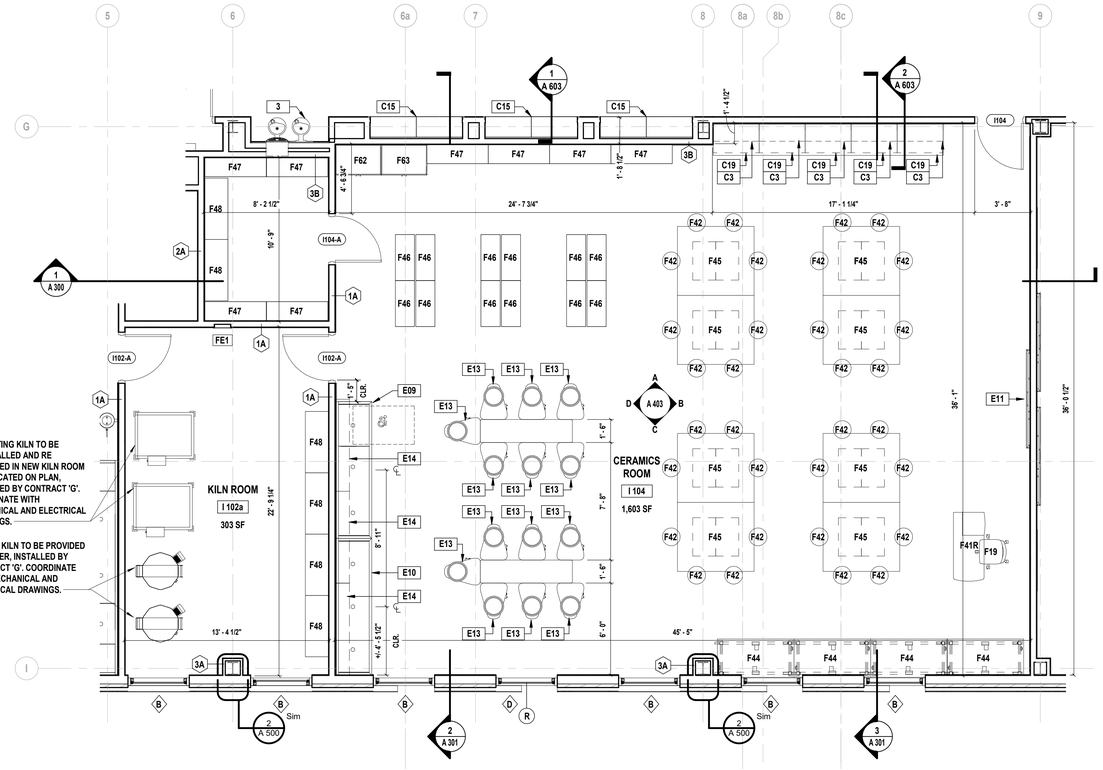

1 Enlarged Ceramics Plan

SCALE: 1/4" = 1'-0"

NOTE: SEE DRAWING A600.00 FOR CASEWORK AND SPECIALTY EQUIPMENT SCHEDULE.
SEE DRAWING A706.00 FOR FURNITURE SCHEDULE.

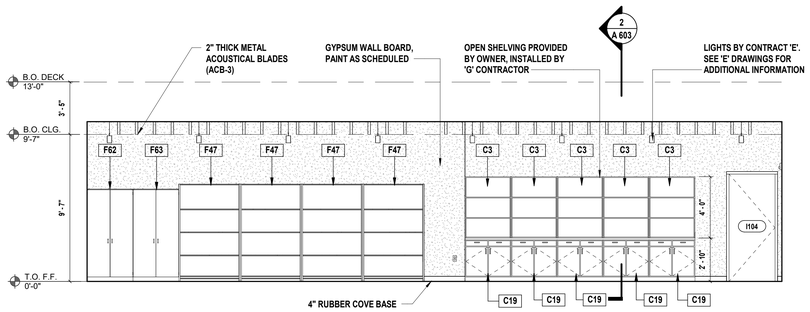

A Interior Elevation

SCALE: 1/4" = 1'-0"

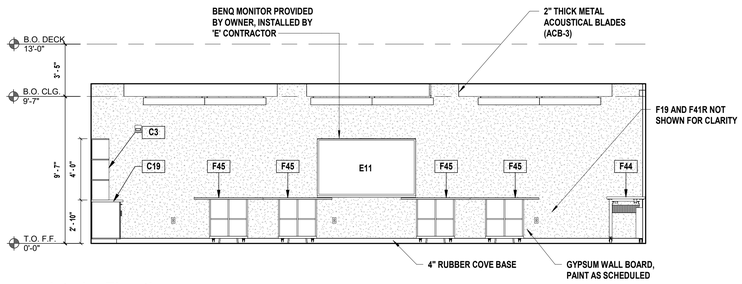

B Interior Elevation

SCALE: 1/4" = 1'-0"

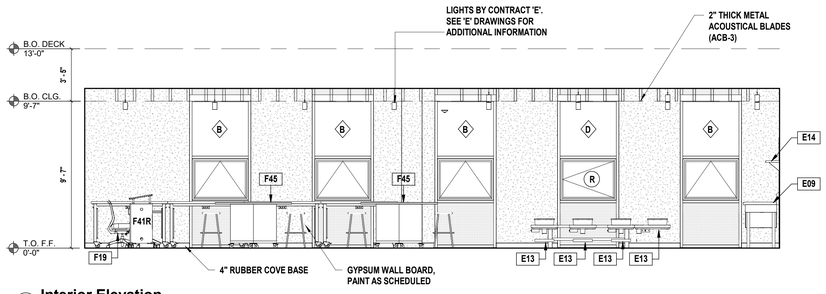

C Interior Elevation

SCALE: 1/4" = 1'-0"

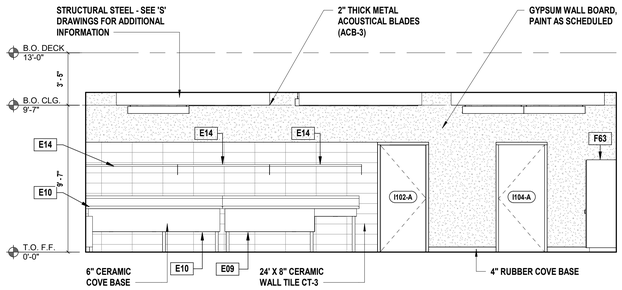

D Interior Elevation

SCALE: 1/4" = 1'-0"

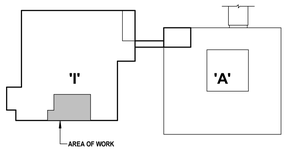

Key Plan

Scale: N.T.S.

H2M architects + engineers
538 Broad Hollow Road, 4th Floor East
Melville, NY 11747
631.756.8000 • www.h2m.com
Architecture & Landscape Architecture: No Certificate Required
Engineering Certificate of Authorization No.: 0018178

CONSULTANTS:

MARK	DATE	DESCRIPTION

REGISTERED ARCHITECT KEVIN MICHAEL MEDLER 038379 STATE OF NEW YORK

KEVIN M. MEDLER, R.A.
NY PROFESSIONAL ARCHITECT Lic. No. 038379
ST010924 Exp. Date

DESIGNED BY:	DRAWN BY:	CHECKED BY:	REVIEWED BY:
CWP	DOD/NPO	Checker	
PROJECT No: WPSD 2203	DATE: MARCH 2025	SCALE: AS SHOWN	

CLIENT

WHITE PLAINS CITY SCHOOL DISTRICT

ADDITION AT WHITE PLAINS HIGH SCHOOL

550 NORTH STREET, WHITE PLAINS, NY 10605

66-22-00-01-0-016-030

CONTRACT
CONTRACT G
GENERAL CONSTRUCTION

STATUS
FINAL BID SET

SHEET TITLE
ENLARGED CERAMICS PLAN, ELEVATIONS, DETAILS & SCHEDULES

DRAWING No.
A 403.00

C:\Users\ddesouza\Documents\WPSD2203_Cerm21_A_DDnSouzaDBTLB.rvt

3/6/2025 2:45:51 PM

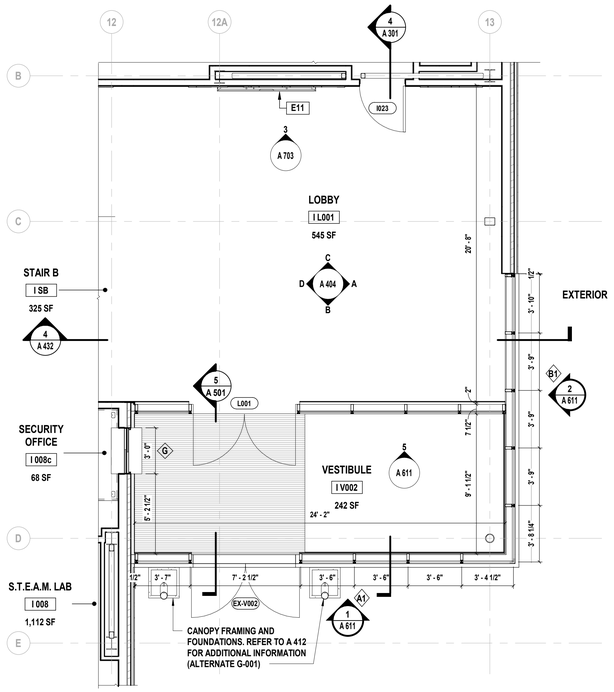

1 Enlarged Vestibule I V002 Plan
SCALE: 1/4" = 1'-0"

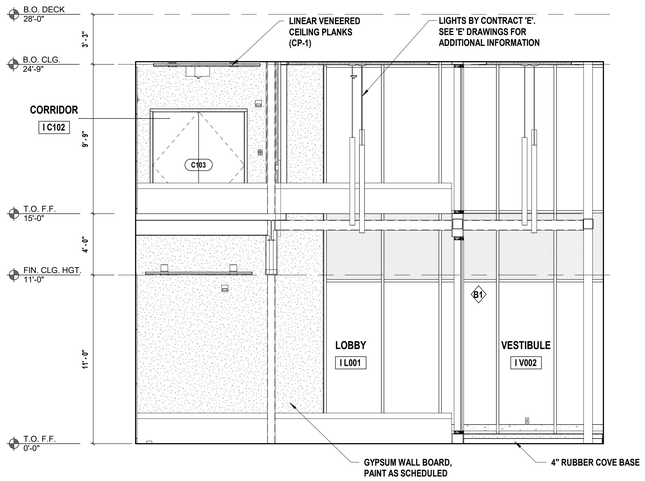

A Interior Elevation
SCALE: 1/4" = 1'-0"

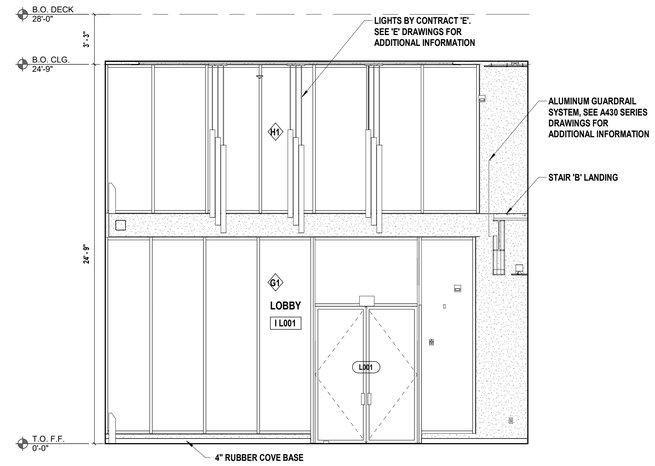

B Interior Elevation
SCALE: 1/4" = 1'-0"

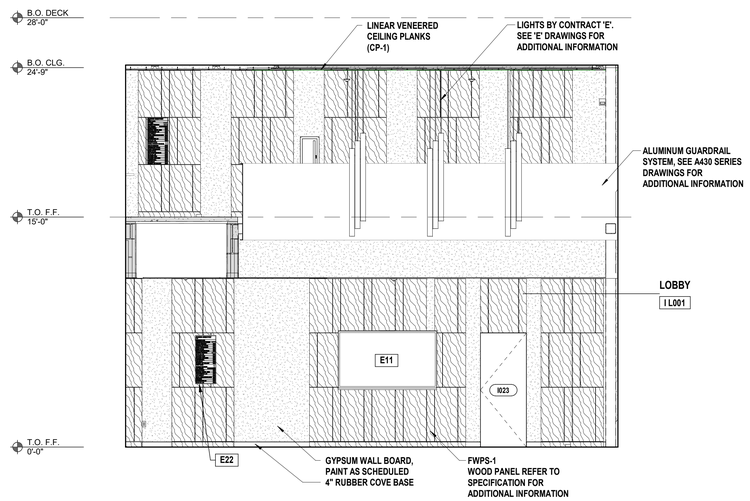

C Interior Elevation
SCALE: 1/4" = 1'-0"

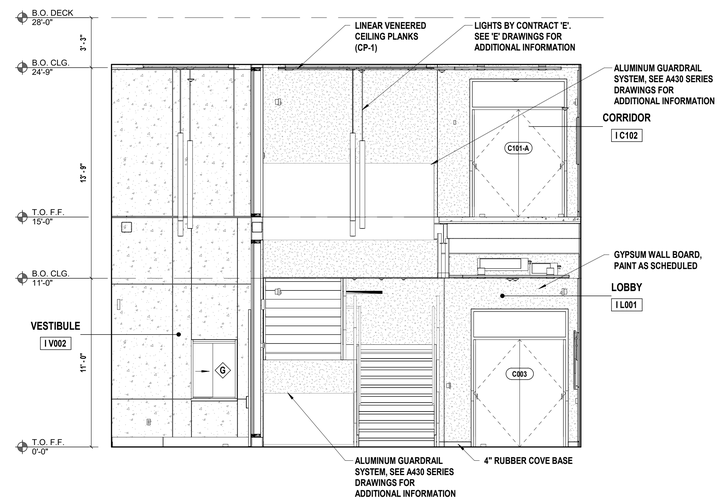

D Interior Elevation
SCALE: 1/4" = 1'-0"

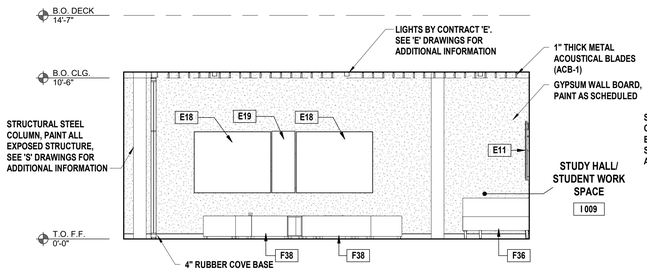

E Interior Elevation
SCALE: 1/4" = 1'-0"
NOTE: SEE A100 SERIES DRAWINGS FOR ADDITIONAL INFORMATION.
SEE DRAWING A600.00 FOR SPECIALTY EQUIPMENT SCHEDULE.
SEE DRAWING A706.00 FOR FURNITURE SCHEDULE.

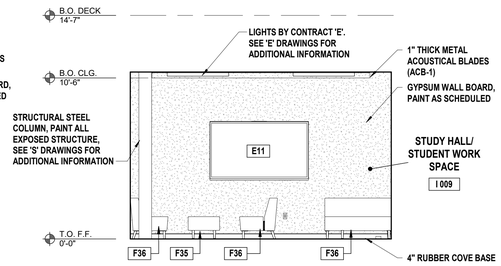

F Interior Elevation
SCALE: 1/4" = 1'-0"
NOTE: SEE A100 SERIES DRAWINGS FOR ADDITIONAL INFORMATION.
SEE DRAWING A600.00 FOR SPECIALTY EQUIPMENT SCHEDULE.
SEE DRAWING A706.00 FOR FURNITURE SCHEDULE.

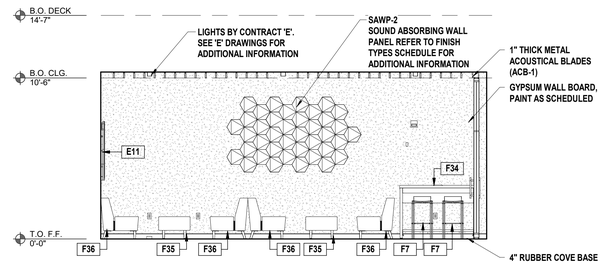

G Interior Elevation
SCALE: 1/4" = 1'-0"
NOTE: SEE A100 SERIES DRAWINGS FOR ADDITIONAL INFORMATION.
SEE DRAWING A600.00 FOR SPECIALTY EQUIPMENT SCHEDULE.
SEE DRAWING A706.00 FOR FURNITURE SCHEDULE.

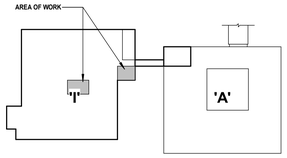

Key Plan
Scale: N.T.S.

H2M architects + engineers
538 Broad Hollow Road, 4th Floor East
Melville, NY 11747
631.756.8000 • www.h2m.com
Architecture & Landscape Architecture: No Certificate Required
Engineering Certificate of Authorization No.: 0018178

CONSULTANTS:

MARK	DATE	DESCRIPTION
2	01-10-2025	SED ADDENDUM 2

KEVIN M. MEDLER, R.A.
NY PROFESSIONAL ARCHITECT Lic. No. 028379

DESIGNED BY:	DRAWN BY:	CHECKED BY:	REVIEWED BY:
CWP	DOD/NPO	Checker	

PROJECT No.:	DATE:	SCALE:
WPSD 2203	MARCH 2025	AS SHOWN

CLIENT

WHITE PLAINS CITY SCHOOL DISTRICT

ADDITION AT WHITE PLAINS HIGH SCHOOL

550 NORTH STREET, WHITE PLAINS, NY 10605

66-22-00-01-0-016-030

CONTRACT

CONTRACT G
GENERAL CONSTRUCTION

STATUS

FINAL BID SET

SHEET TITLE

ENLARGED LOBBY & VESTIBULE, ELEVATIONS, DETAILS & SCHEDULES

DRAWING No.

A 404.00

C:\Users\ddevoze\Documents\WPSD2203_Central21_A_DDeVozeDBTLB.rvt
3/6/2025 2:49:07 PM

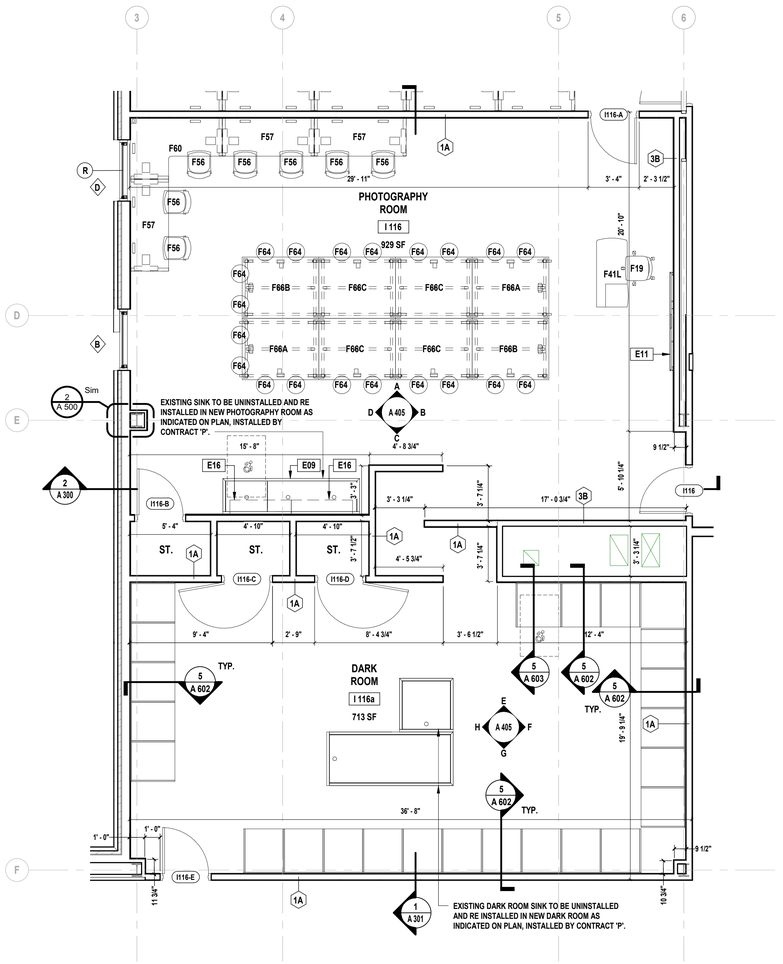

1 Enlarged Photography Plan

SCALE: 1/4" = 1'-0"

NOTE: SEE DRAWING A600.00 FOR SPECIALTY EQUIPMENT SCHEDULE.
SEE DRAWING A706.00 FOR FURNITURE SCHEDULE.

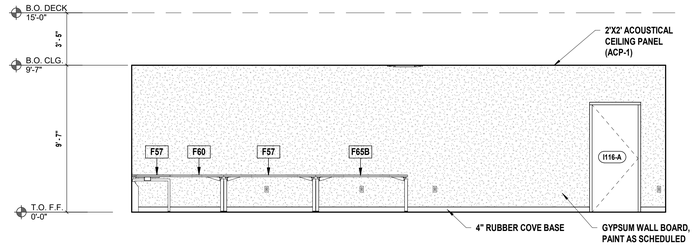

A Interior Elevation

SCALE: 1/4" = 1'-0"

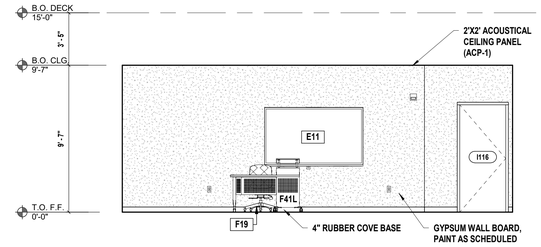

B Interior Elevation

SCALE: 1/4" = 1'-0"

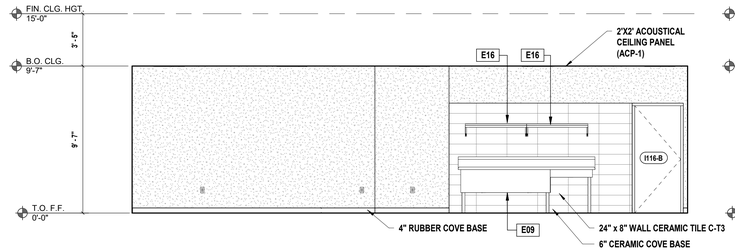

C Interior Elevation

SCALE: 1/4" = 1'-0"

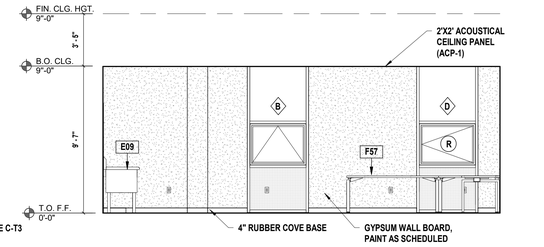

D Interior Elevation

SCALE: 1/4" = 1'-0"

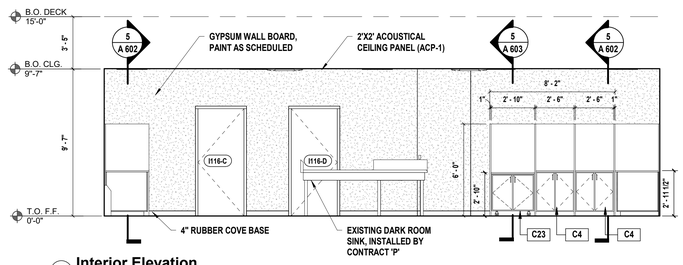

E Interior Elevation

SCALE: 1/4" = 1'-0"

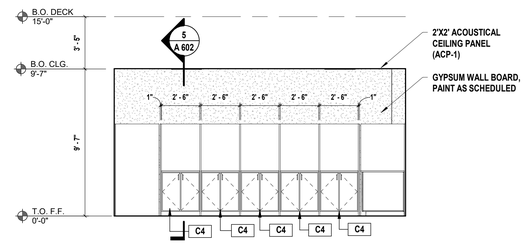

F Interior Elevation

SCALE: 1/4" = 1'-0"

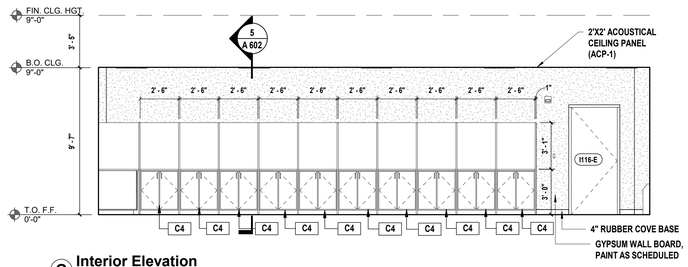

G Interior Elevation

SCALE: 1/4" = 1'-0"

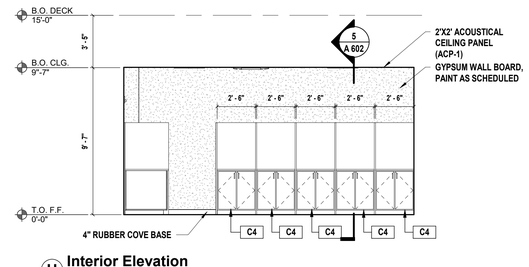

H Interior Elevation

SCALE: 1/4" = 1'-0"

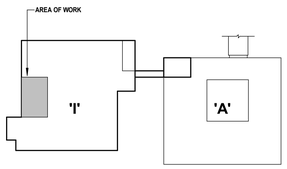

Key Plan
Scale: N.T.S.

H2M architects + engineers
538 Broad Hollow Road, 4th Floor East
Melville, NY 11747
631.756.8000 • www.h2m.com
Architecture & Landscape Architecture: No Certificate Required
Engineering Certificate of Authorization No.: 0018178

CONSULTANTS:

MARK	DATE	DESCRIPTION

REGISTERED ARCHITECT KEVIN MICHAEL MEDLER 038379 STATE OF NEW YORK

KEVIN M. MEDLER, R.A.
NY PROFESSIONAL ARCHITECT Lic. No. 038379

DESIGNED BY:	DRAWN BY:	CHECKED BY:	REVIEWED BY:
CWP	DOD/NPO	Checker	
PROJECT No: WPSD 2203	DATE: MARCH 2025	SCALE: AS SHOWN	

CLIENT

WHITE PLAINS CITY SCHOOL DISTRICT

ADDITION AT WHITE PLAINS HIGH SCHOOL

550 NORTH STREET, WHITE PLAINS, NY 10605

66-22-00-01-0-016-030

CONTRACT

CONTRACT G
GENERAL CONSTRUCTION

STATUS

FINAL BID SET

SHEET TITLE

ENLARGED PHOTOGRAPHY ROOM PLAN, ELEVATIONS, DETAILS & SCHEDULES

DRAWING No.

A 405.00

C:\Users\ddesouza\Documents\WPSD2203_Central\21_A_DOdSouzaDRT18.rvt
3/6/2025 2:49:17 PM

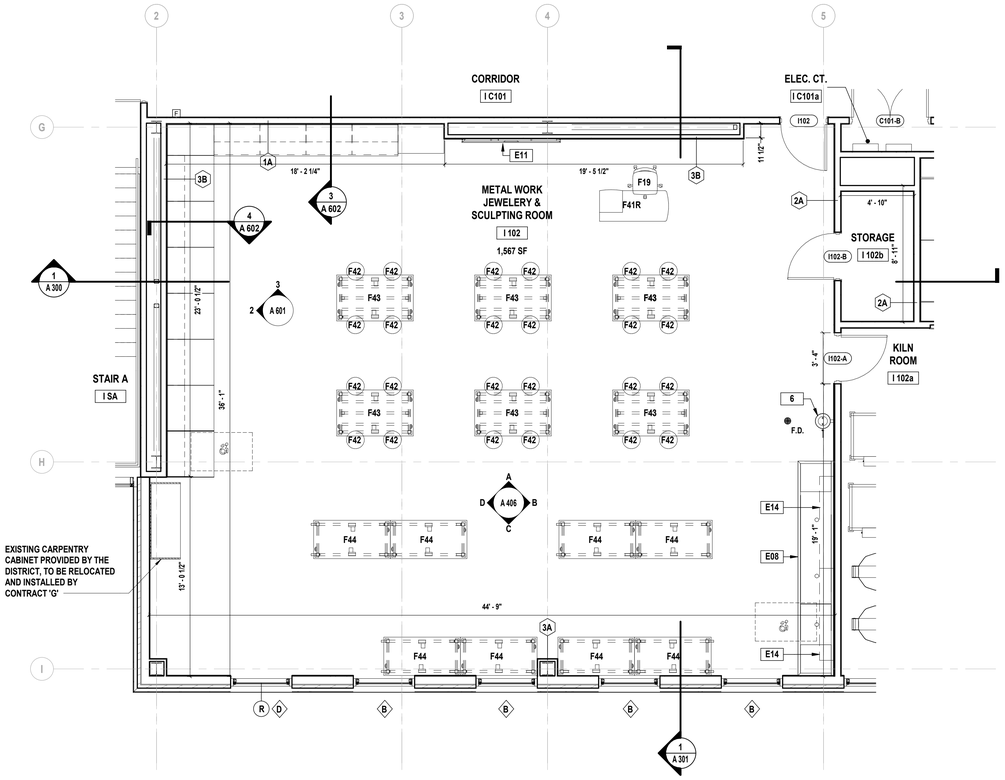

1 Enlarged Metal Work, Jewelery, and Sculpting Room Plan

SCALE: 1/4" = 1'-0"

NOTE: SEE DRAWING A600.00 FOR SPECIALTY EQUIPMENT SCHEDULE.
SEE DRAWING A706.00 FOR FURNITURE SCHEDULE.

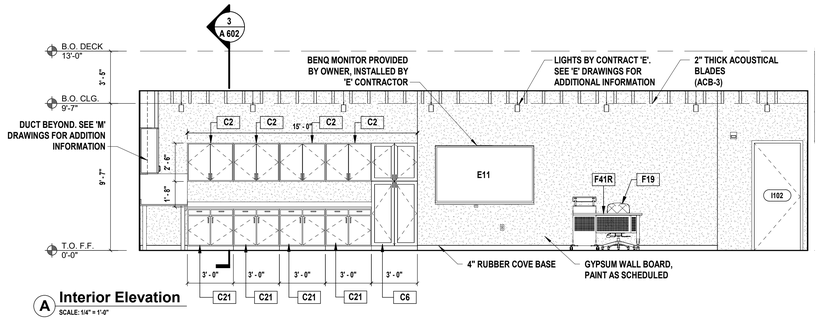

A Interior Elevation

SCALE: 1/4" = 1'-0"

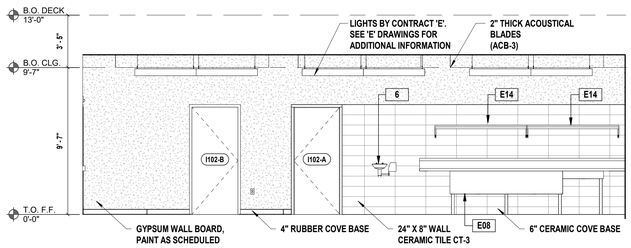

B Interior Elevation

SCALE: 1/4" = 1'-0"

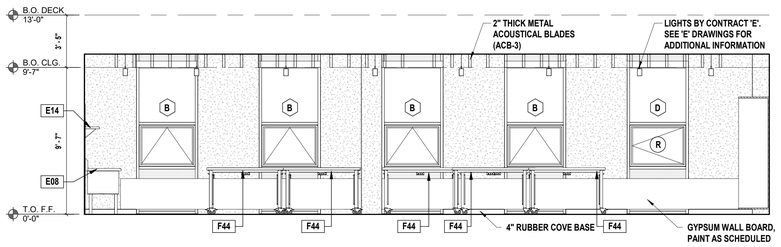

C Interior Elevation

SCALE: 1/4" = 1'-0"

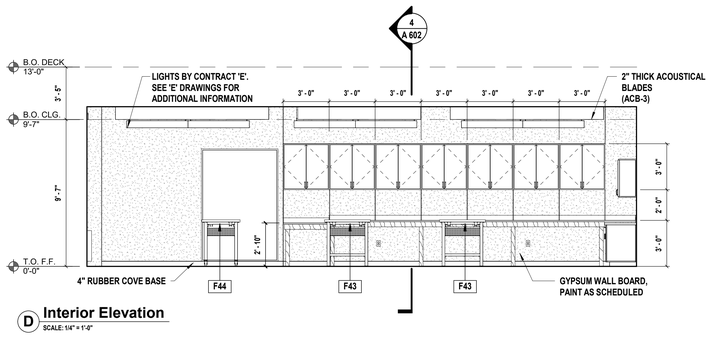

D Interior Elevation

SCALE: 1/4" = 1'-0"

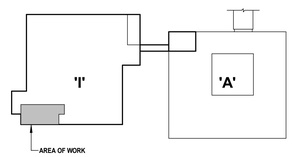

Key Plan

Scale: N.T.S.

H2M architects + engineers

538 Broad Hollow Road, 4th Floor East
Melville, NY 11747
631.756.8000 • www.h2m.com
Architecture & Landscape Architecture: No Certificate Required
Engineering Certificate of Authorization No.: 0018178

CONSULTANTS:

MARK	DATE	DESCRIPTION

REGISTERED ARCHITECT KEVIN MICHAEL MEDLER 038379 STATE OF NEW YORK

KEVIN M. MEDLER, R.A.
NY PROFESSIONAL ARCHITECT Lic. No. 038379
THE TRANSMITTAL OF THIS DOCUMENT DOES NOT IN & OF ITSELF CONFER LICENSING, IN & OF ITSELF.

DESIGNED BY:	DRAWN BY:	CHECKED BY:	REVIEWED BY:
CWP	DOD/NPO	Checker	

PROJECT No:	DATE:	SCALE:
WPSD 2203	MARCH 2025	AS SHOWN

CLIENT

WHITE PLAINS CITY SCHOOL DISTRICT

ADDITION AT WHITE PLAINS HIGH SCHOOL

550 NORTH STREET, WHITE PLAINS, NY 10605

66-22-00-01-0-016-030

CONTRACT

CONTRACT G
GENERAL CONSTRUCTION

STATUS

FINAL BID SET

SHEET TITLE

ENLARGED METAL / SCULPTURE PLAN, ELEVATIONS, DETAILS & SCHEDULES

DRAWING No.

A 406.00

C:\Users\ddesouza\Documents\WPSD2203_Central21_A_DDdeSouzaDBTLB.rvt

3/6/2025 2:40:25 PM

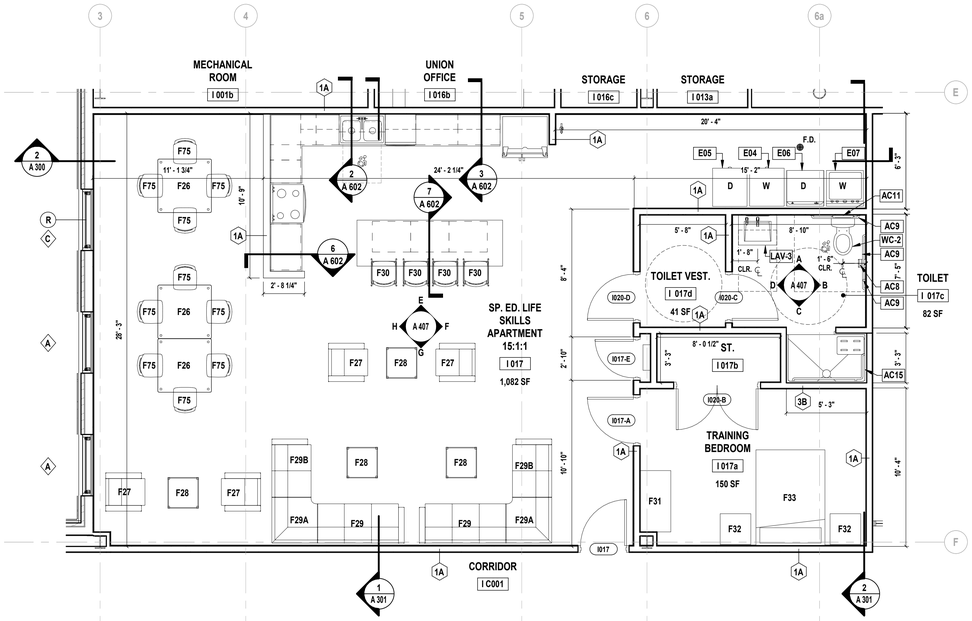

1 Enlarged Special Education Life Skills Apartments

SCALE: 1/4" = 1'-0"

NOTE: SEE DRAWING A600.00 FOR SPECIALTY EQUIPMENT SCHEDULE.
SEE DRAWING A706.00 FOR FURNITURE SCHEDULE.

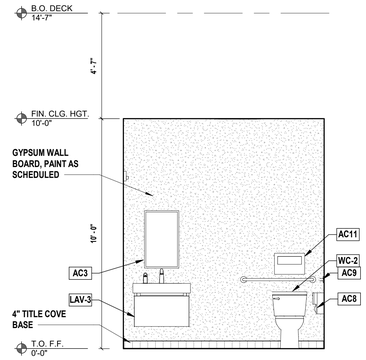

A Interior Elevation

SCALE: 3/8" = 1'-0"

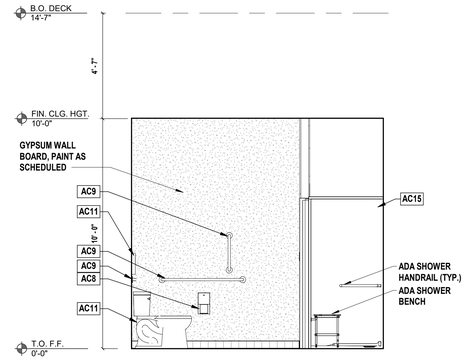

B Interior Elevation

SCALE: 3/8" = 1'-0"

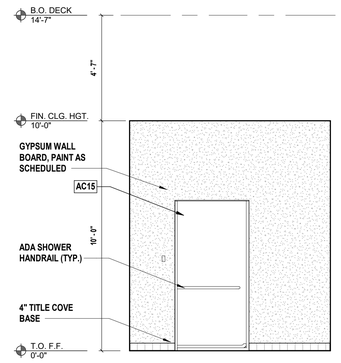

C Interior Elevation

SCALE: 3/8" = 1'-0"

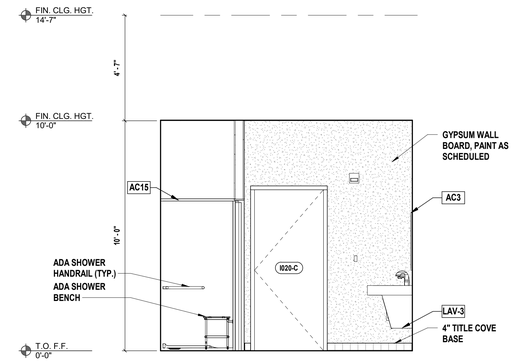

D Interior Elevation

SCALE: 3/8" = 1'-0"

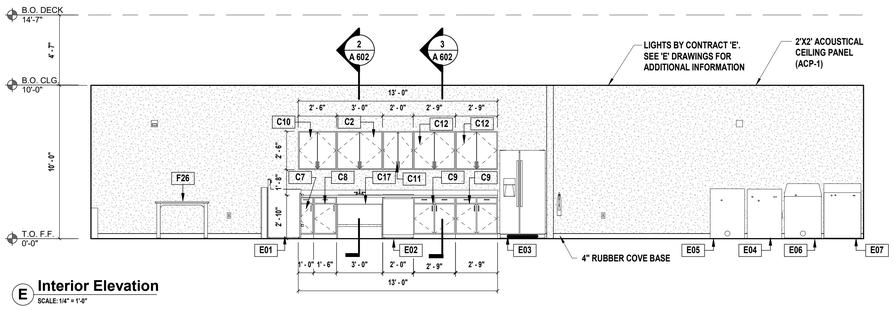

E Interior Elevation

SCALE: 1/4" = 1'-0"

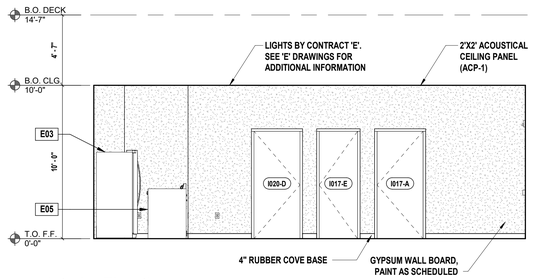

F Interior Elevation

SCALE: 1/4" = 1'-0"

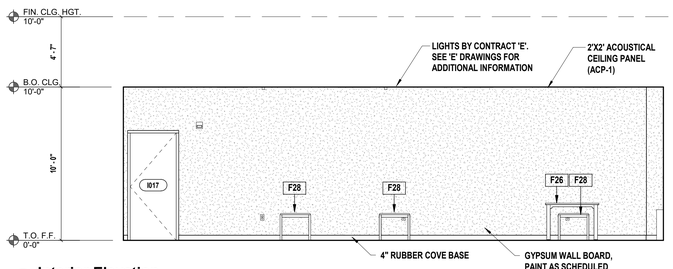

G Interior Elevation

SCALE: 1/4" = 1'-0"

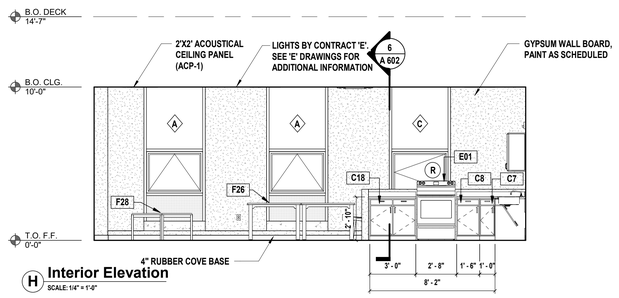

H Interior Elevation

SCALE: 1/4" = 1'-0"

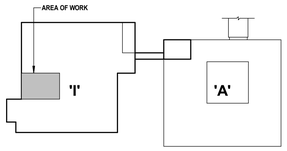

Key Plan

Scale: N.T.S.

H2M architects + engineers
538 Broad Hollow Road, 4th Floor East
Melville, NY 11747
631.756.8000 • www.h2m.com
Architecture & Landscape Architecture: No Certificate Required
Engineering Certificate of Authorization No.: 0018178

CONSULTANTS:

MARK	DATE	DESCRIPTION

KEVIN M. MEDLER, R.A.
NY PROFESSIONAL ARCHITECT Lic. No. 036379

DESIGNED BY:	DRAWN BY:	CHECKED BY:	REVIEWED BY:
CWP	DOD/NPO	Checker	

PROJECT No:	DATE:	SCALE:
WPSD 2203	MARCH 2025	AS SHOWN

CLIENT

WHITE PLAINS CITY SCHOOL DISTRICT

ADDITION AT WHITE PLAINS HIGH SCHOOL

550 NORTH STREET, WHITE PLAINS, NY 10605

66-22-00-01-0-016-030

CONTRACT

CONTRACT G
GENERAL CONSTRUCTION

STATUS

FINAL BID SET

SHEET TITLE

ENLARGED LIFE SKILLS PLAN, ELEVATIONS, DETAILS & SCHEDULES

DRAWING No.

A 407.00

C:\Users\ddesouza\Documents\WPSD2203_Cente21_A_DDoSouzaDBTLB.rvt

3/6/2025 2:49:34 PM

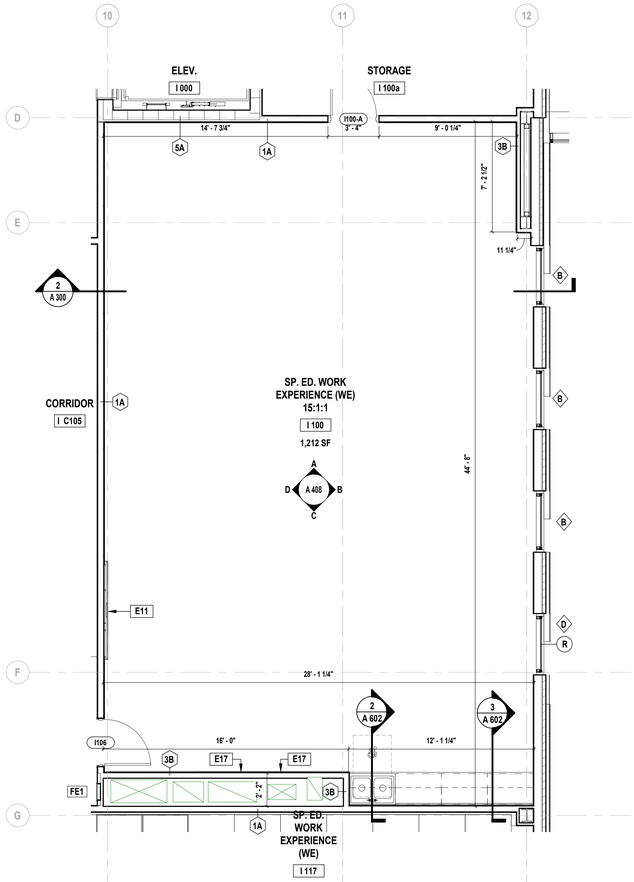

1 **Enlarged STEAM Innovation Lab Plan**
SCALE: 1/4" = 1'-0"

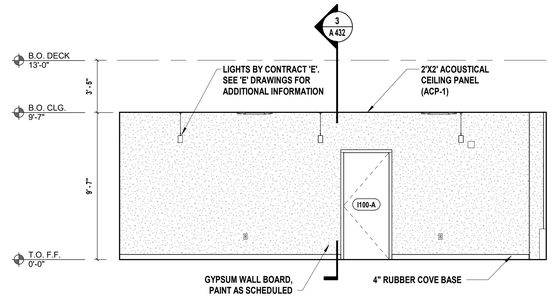

A **Interior Elevation**
SCALE: 1/4" = 1'-0"

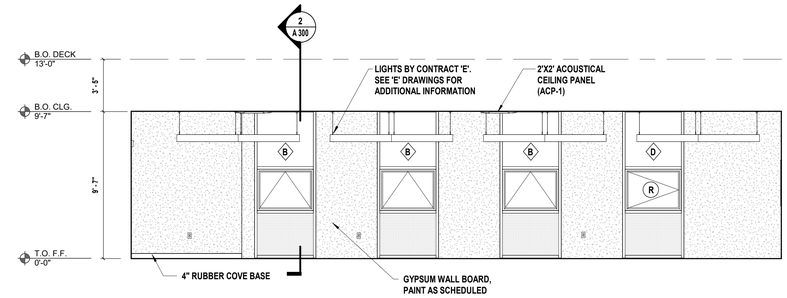

B **Interior Elevation**
SCALE: 1/4" = 1'-0"

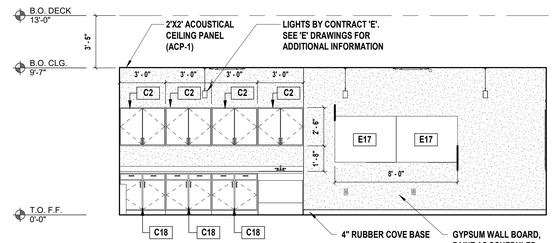

C **Interior Elevation**
SCALE: 1/4" = 1'-0"

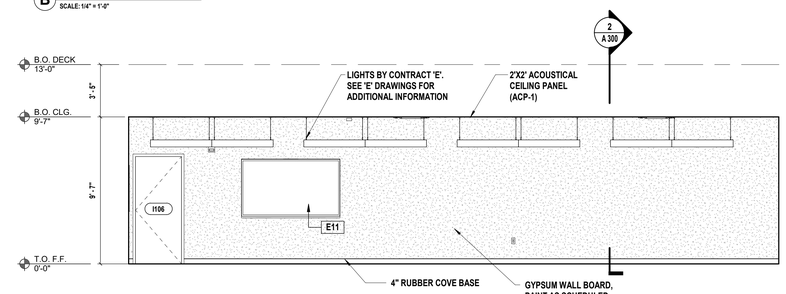

D **Interior Elevation**
SCALE: 1/4" = 1'-0"

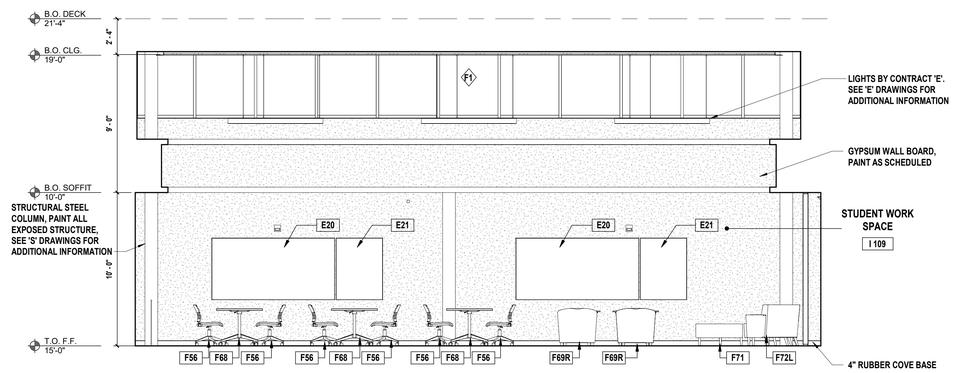

E **Interior Elevation**
SCALE: 1/4" = 1'-0"
NOTE: SEE A100 SERIES DRAWINGS FOR ADDITIONAL INFORMATION.

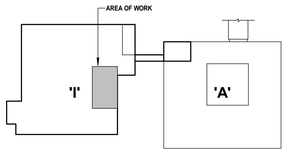

Key Plan
Scale: N.T.S.

H2M architects + engineers
538 Broad Hollow Road, 4th Floor East
Melville, NY 11747
631.756.8000 • www.h2m.com
Architecture & Landscape Architecture: No Certificate Required
Engineering Certificate of Authorization No.: 0018178

CONSULTANTS:

MARK	DATE	DESCRIPTION

REGISTERED ARCHITECT KEVIN MICHAEL MEDLER 038379 STATE OF NEW YORK

KEVIN M. MEDLER, R.A.
NY PROFESSIONAL ARCHITECT Lic. No. 038379

ST010924
Exp. Date

DESIGNED BY:	DRAWN BY:	CHECKED BY:	REVIEWED BY:
CWP	DOD/NPO	Checker	

PROJECT No:	DATE:	SCALE:
WPSD 2203	MARCH 2025	AS SHOWN

CLIENT
WHITE PLAINS CITY SCHOOL DISTRICT

ADDITION AT WHITE PLAINS HIGH SCHOOL

550 NORTH STREET, WHITE PLAINS, NY 10605

66-22-00-01-0-016-030

CONTRACT
CONTRACT G
GENERAL CONSTRUCTION

STATUS
FINAL BID SET

SHEET TITLE
ENLARGED STEAM INNOVATION LAB PLAN, ELEVATIONS, DETAILS & SCHEDULES

DRAWING No.
A 408.00

C:\Users\ddesouza\Documents\WPSD2203_CentralV21_A_DDeSouzaDETT18.rvt
3/6/2025 2:49:42 PM

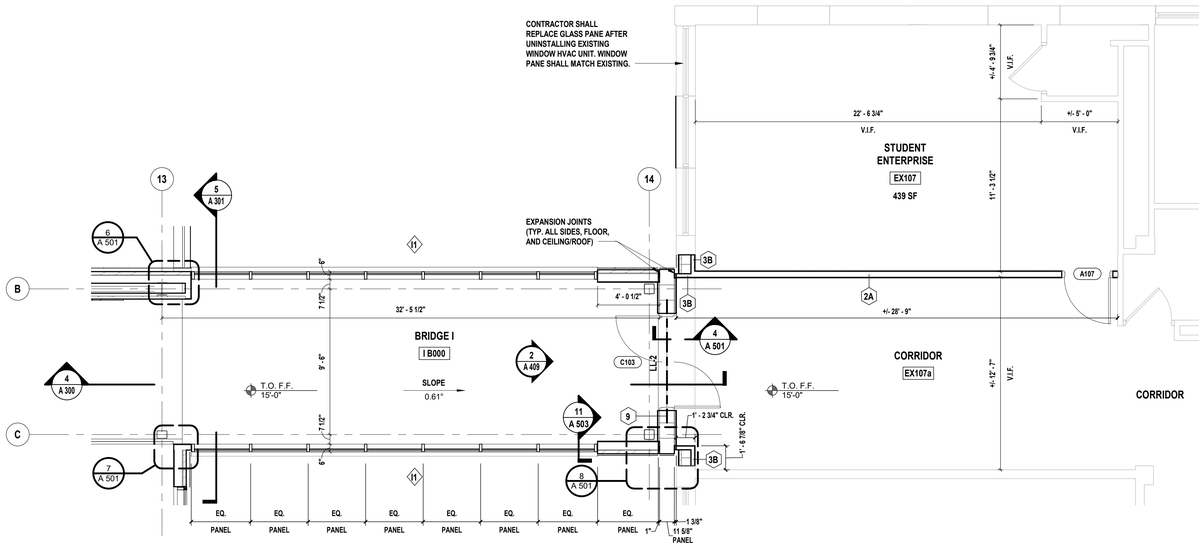

1 Partial First Floor Plan

SCALE: 1/4" = 1'-0"

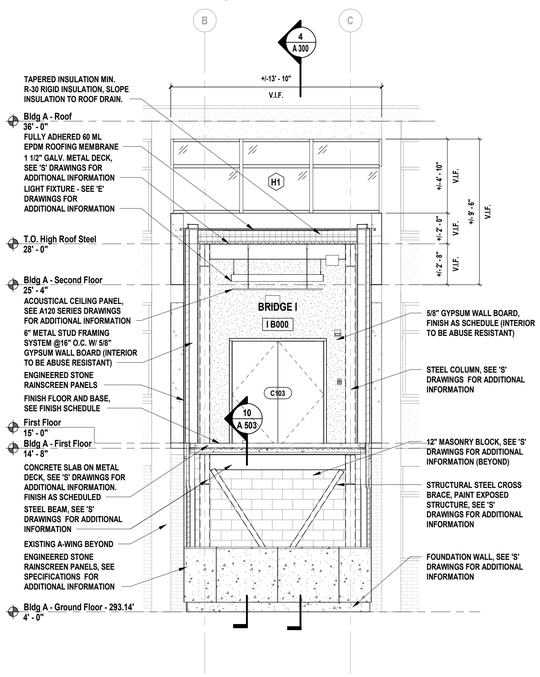

2 SECTION AT BRIDGE

SCALE: 1/4" = 1'-0"

FLOOR PLAN GENERAL NOTES

1. COORDINATE THE WORK INDICATED HERE WITH ALL CONTRACT DOCUMENTS AND SPECIFICATIONS.
2. FOR WALL CONSTRUCTION REFER TO PARTITION SCHEDULE AND DETAILS ON SHEET A 000.00.
3. ALL DIMENSIONS ARE TO ROUGH STUD OR CONCRETE MASONRY UNIT (STRUCTURE), UNLESS NOTED OTHERWISE.
4. ALL DOORS IN STUD WALLS SHALL BE EITHER CENTERED ON WALLS, 4" FROM WALL TO ROUGH JAMB, OR AS OTHERWISE INDICATED.
5. PROVIDE SADDLES WHERE INDICATED AT ROOM TRANSITIONS AS NOTED IN THE DOOR SCHEDULE. SADDLES TO BE FULL WIDTH OF OPENING. (SEE THE PROJECT MANUAL FOR ADDITIONAL INFORMATION).
6. ALL PAINTING SHALL BE PERFORMED IN ACCORDANCE WITH THE REQUIREMENTS CONTAINED IN SECTION 099123 OF THE PROJECT MANUAL.
7. REFER TO ENLARGED FLOOR PLANS, DETAILS AND ALL OTHER CONTRACT DOCUMENTS AND SPECIFICATIONS FOR ADDITIONAL FRAMING INFORMATION.
8. FOR DOORS DENOTED, (—) REFER TO DOOR SCHEDULE FOR ADDITIONAL INFORMATION.
9. FOR WINDOWS DENOTED ◇, REFER TO WINDOW SCHEDULE FOR ADDITIONAL INFORMATION.
10. ACCOMMODATE THE CONSTRUCTION TO ACCEPT ALL PIPING, CONDUITS, EQUIPMENT, ETC., EITHER SPECIFIED OR DETAILED TO BE RECESSED OR CONCEALED IN WALLS AS REQUIRED.
11. FOR ALL STAIRS, SEE ENLARGED PLANS, SECTIONS AND DETAILS ON A 430 SERIES DRAWINGS.
12. ALL ELEVATOR LANDINGS AND INSIDE AND OUTSIDE OF STAIR LANDINGS ARE TO RECEIVE EMERGENCY EXIT MAPS, MAPS HAVE BEEN PROVIDED IN SPECIFICATION SECTION 101423.
13. ALL EXPOSED CORNERS OF GYPSUM WALL BOARD ARE TO RECEIVE CORNER GUARDS UNLESS NOTED OR DIRECTED OTHERWISE BY THE ARCHITECT.
14. SEE SLAB PLAN FOR CONTROL AND EXPANSION JOINT LOCATIONS.
15. COORDINATE LOCATIONS FOR FLOOR DRAINS WITH CONTRACT "P."
16. PROVIDE RECESSED WALK OFF MAT IN CONCRETE FLOOR SLAB WHERE INDICATED ON PLANS BY CONTRACT 'G',
17. REFER TO SHEETS G 100.00 FOR FIRE RATED WALLS AND FIRE EXTINGUISHER LOCATIONS TO BE PROVIDED AND INSTALLED BY CONTRACT 'G'.

FLOOR PLAN LEGEND

	EXTERIOR WALL CONSTRUCTION - SEE WALL TYPES ON A-000 FOR ADDITIONAL INFORMATION	FE	RECESSED FIRE EXTINGUISHER
	INTERIOR MASONRY WALL CONSTRUCTION - SEE WALL TYPES ON A-000 FOR ADDITIONAL INFORMATION		SINGLE DRINKING WATER/ BOTTLE FILLING STATION
	INTERIOR METAL STUD WALL CONSTRUCTION - SEE WALL TYPES ON A-000 FOR ADDITIONAL INFORMATION		DOUBLE DRINKING WATER/ BOTTLE FILLING STATION
	WINDOW, FRAME AND ASSOCIATED HARDWARE - SEE SCHEDULE FOR ADDITIONAL INFORMATION		EMERGENCY EYE WASH STATION
	DOOR, FRAME AND ASSOCIATED HARDWARE - SEE SCHEDULE FOR ADDITIONAL INFORMATION	FD	FLOOR DRAIN, SEE 'P' DRAWINGS FOR ADDITIONAL INFORMATION

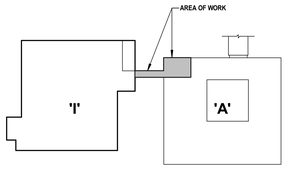

Key Plan
Scale: N.T.S.

H2M architects + engineers
538 Broad Hollow Road, 4th Floor East
Melville, NY 11747
631.756.8000 • www.h2m.com
Architecture & Landscape Architecture: No Certificate Required
Engineering Certificate of Authorization No.: 0018178

CONSULTANTS:

MARK	DATE	DESCRIPTION

REGISTERED ARCHITECT KEVIN MICHAEL MEDLER 038379 STATE OF NEW YORK

KEVIN M. MEDLER, R.A.
NY PROFESSIONAL ARCHITECT Lic. No. 038379
THE TRANSMITTAL OF THIS DOCUMENT DOES NOT IN A LICENSED PROFESSIONAL ENGINEER, ARCHITECT, OR LANDSCAPE ARCHITECT, UNLESS HE/SHE HAS ADDED HIS/HER SEAL, SIGNATURE AND DATE TO THE DOCUMENT.

ST310924 Exp. Date

DESIGNED BY:	DRAWN BY:	CHECKED BY:	REVIEWED BY:
CWP	DOD/NPO	CWP/KMM	
PROJECT No.: WPSD 2203	DATE: MARCH 2025	SCALE: AS SHOWN	

CLIENT

WHITE PLAINS CITY SCHOOL DISTRICT

ADDITION AT WHITE PLAINS HIGH SCHOOL

550 NORTH STREET, WHITE PLAINS, NY 10605

66-22-00-01-0-016-030

CONTRACT
CONTRACT G
GENERAL CONSTRUCTION

STATUS
FINAL BID SET

SHEET TITLE
ENLARGED BRIDGE PLAN, ELEVATION, DETAILS & SCHEDULES

DRAWING No.
A 409.00

C:\Users\ddesouza\Documents\WPSD2203_Cente\21_A_DDoSouzaDBTLB.rvt
3/6/2025 2:49:46 PM

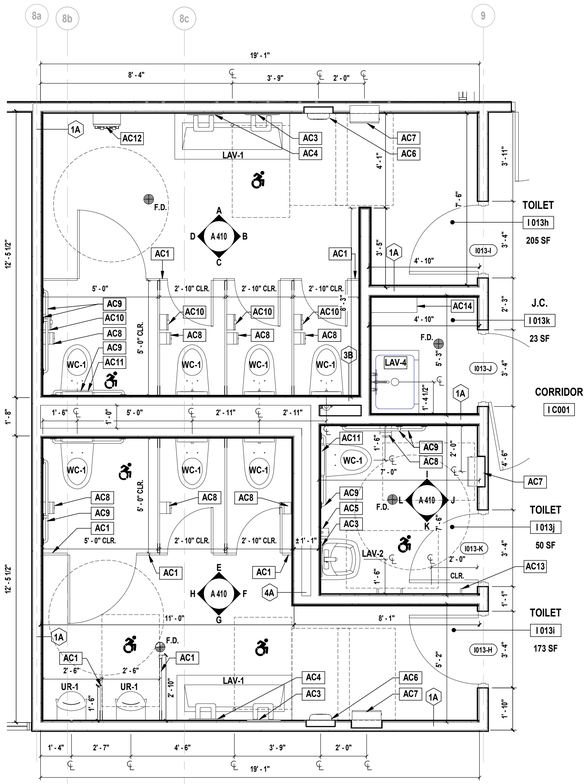

1 Enlarged Typical Restroom Plans
SCALE: 3/8" = 1'-0"

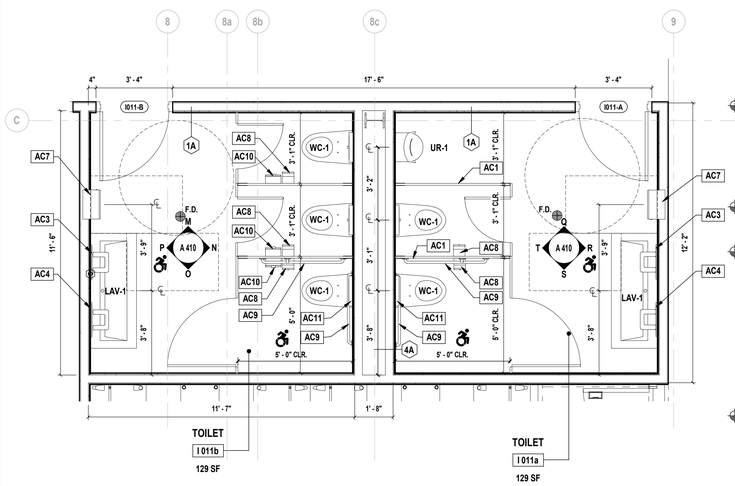

2 Enlarged Typical Toilet Plans
SCALE: 3/8" = 1'-0"

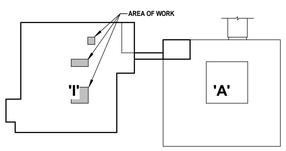

Key Plan
Scale: N.T.S.

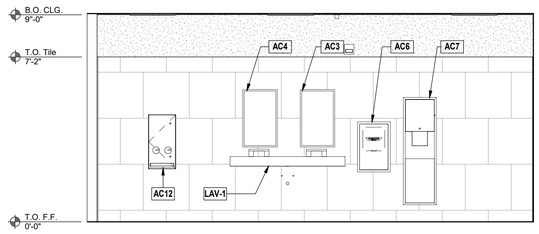

A Interior Elevation
SCALE: 3/8" = 1'-0"

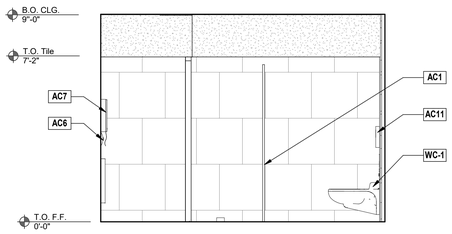

B Interior Elevation
SCALE: 3/8" = 1'-0"

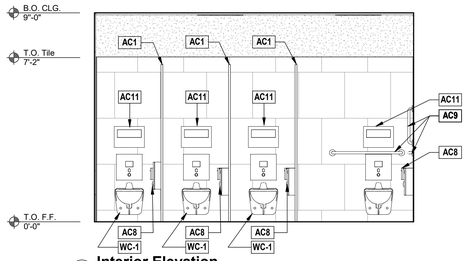

C Interior Elevation
SCALE: 3/8" = 1'-0"

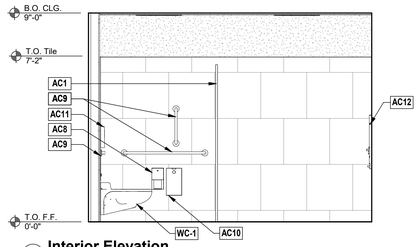

D Interior Elevation
SCALE: 3/8" = 1'-0"

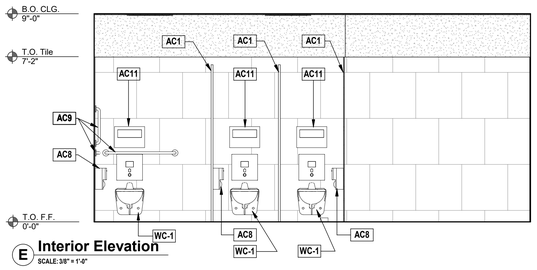

E Interior Elevation
SCALE: 3/8" = 1'-0"

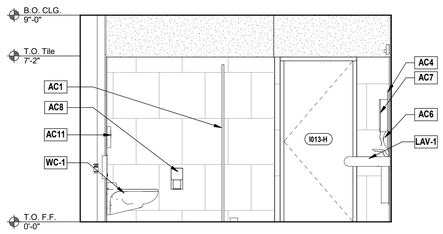

F Interior Elevation
SCALE: 3/8" = 1'-0"

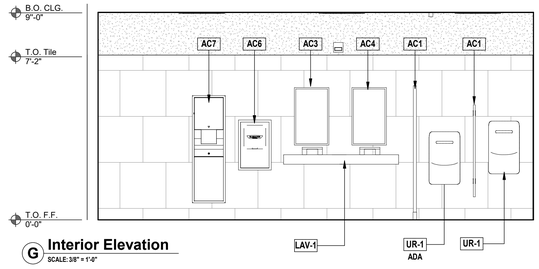

G Interior Elevation
SCALE: 3/8" = 1'-0"

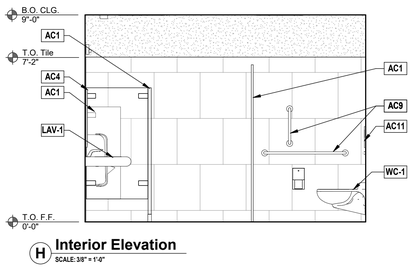

H Interior Elevation
SCALE: 3/8" = 1'-0"

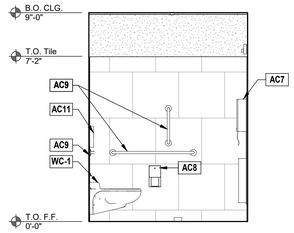

I Interior Elevation
SCALE: 3/8" = 1'-0"

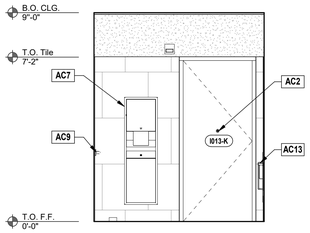

J Interior Elevation
SCALE: 3/8" = 1'-0"

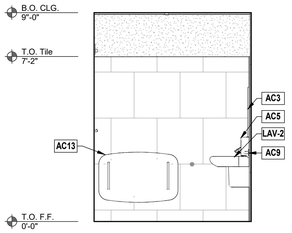

K Interior Elevation
SCALE: 3/8" = 1'-0"

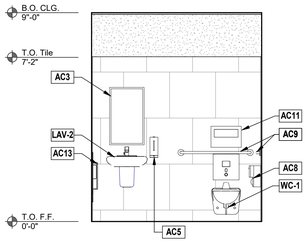

L Interior Elevation
SCALE: 3/8" = 1'-0"

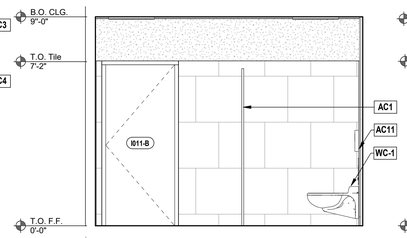

M Interior Elevation
SCALE: 3/8" = 1'-0"

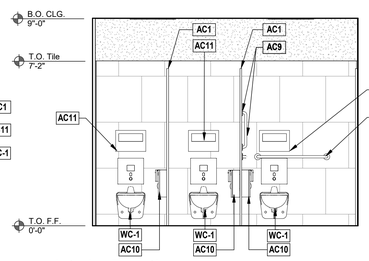

N Interior Elevation
SCALE: 3/8" = 1'-0"

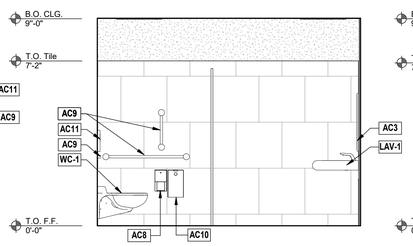

O Interior Elevation
SCALE: 3/8" = 1'-0"

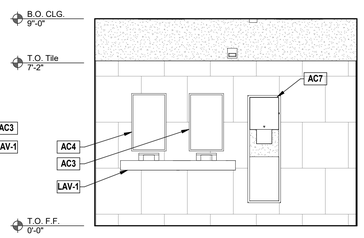

P Interior Elevation
SCALE: 3/8" = 1'-0"

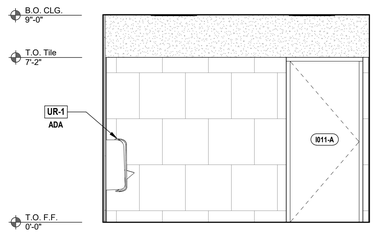

Q Interior Elevation
SCALE: 3/8" = 1'-0"

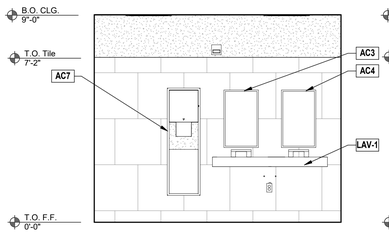

R Interior Elevation
SCALE: 3/8" = 1'-0"

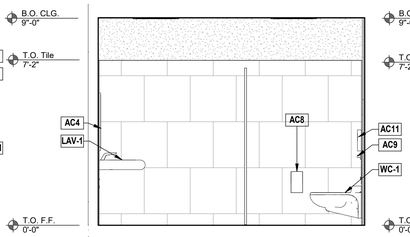

S Interior Elevation
SCALE: 3/8" = 1'-0"

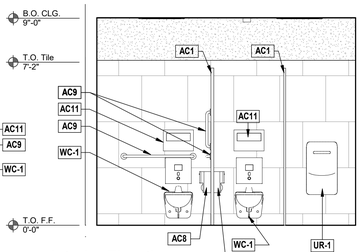

T Interior Elevation
SCALE: 3/8" = 1'-0"

H2M architects + engineers
538 Broad Hollow Road, 4th Floor East
Melville, NY 11747
631.756.8000 • www.h2m.com
Architecture & Landscape Architecture: No Certificate Required
Engineering Certificate of Authorization No.: 0018178

CONSULTANTS:

MARK	DATE	DESCRIPTION

REGISTERED ARCHITECT KEVIN MICHAEL MEDLER 038379 STATE OF NEW YORK

KEVIN M. MEDLER, R.A.
NY PROFESSIONAL ARCHITECT Lic. No. 038379
Exp. Date: 07/01/2024

DESIGNED BY:	DRAWN BY:	CHECKED BY:	REVIEWED BY:
CWP	DOD/NPO	CWP/KMM	
PROJECT No: WPSD 2203	DATE: MARCH 2025	SCALE: AS SHOWN	

CLIENT
WHITE PLAINS CITY SCHOOL DISTRICT

ADDITION AT WHITE PLAINS HIGH SCHOOL

White Plains Public Schools WP REAL LIFE LEARNING

550 NORTH STREET, WHITE PLAINS, NY 10605

66-22-00-01-0-016-030

CONTRACT
CONTRACT G
GENERAL CONSTRUCTION

STATUS
FINAL BID SET

SHEET TITLE
ENLARGED TOILET ROOM PLANS, AND ELEVATIONS

DRAWING No.
A 410.00

C:\Users\ddesouza\Documents\WPSD2203_Central21_A_DDeSouzaD8TU8.rvt
3/6/2025 2:50:02 PM

TOILET ACCESSORY SCHEDULE

NOTE	SCOPE OF WORK
AC1	ACCESSIBLE PARTITION STALL/SCREEN
AC2	COAT HOOKS
AC3	WALL MOUNTED ADA MIRROR WITH STAINLESS STEEL FRAME
AC4	WALL MOUNTED MIRROR WITH STAINLESS STEEL FRAME
AC5	WALL MOUNTED SOAP DISPENSER
AC6	WALL MOUNTED AUTOMATIC HAND DRYER
AC7	WALL MOUNTED PAPER TOWEL DISPENSER AND WASTE RECEPTACLE - MODEL NUMBER 35370 & 31501
AC8	DOUBLE TOILET PAPER DISPENSER
AC9	1 1/2" STAINLESS STEEL GRAB BARS WITH SNAP FLANGE
AC10	SURFACE MOUNTED SANITARY NAPKIN DISPOSAL
AC11	SURFACE MOUNTED TOILET SEAT COVER DISPENSER
AC12	NAPKIN DISPENSER
AC13	CHANGING TABLE
AC14	UTILITY SHELF
AC15	PREFAB SHOWER STALL

NOTE: TOILET ACCESSORY AC7 & AC8 BY DISTIRCT. GENERAL CONTRACTOR TO INSTALL AND COORDINATE ALL ACCESSORIES.

TOILET FIXTURE SCHEDULE (BY 'P' CONTRACT)

NOTE	SCOPE OF WORK
LAV-1	TWO STATION WALL MOUNTED LAVATORY.
LAV-2	ADA WALL MOUNTED LAVATORY.
LAV-3	ADA ONE STATION WALL MOUNTED LAVATORY.
LAV-4	SERVICE SINK.
LAV-5	THREE STATION WALL MOUNTED LAVATORY.
UR-1	URINAL.
WC-1	ADA WALL MOUNTED WATER CLOSET.
WC-2	ADA FLOOR MOUNTED WATER CLOSET.

GENERAL RESTROOM NOTES

1. ALL PAINTING SHALL BE PERFORMED IN ACCORDANCE WITH THE REQUIREMENTS CONTAINED IN DIVISION 9 OF THE SPECIFICATIONS.
2. THIS DRAWING SERVES AS A GENERAL LIST OF FINISH ITEMS AND IS NOT A LIST OF ALL FINISH ITEMS WITHIN A ROOM OR SPACE. REFER TO ALL CONTRACT DRAWINGS AND SPECIFICATIONS TO DETERMINE ALL REQUIRED FINISHES AND FINISH ITEMS.
3. MAINTAIN SAME FINISHES AT ALL WALLS WITHIN RESTROOMS.
4. MOUNTING LOCATIONS OF RESTROOM FIXTURES TO BE REVIEWED AND APPROVED IN FIELD BY OWNER'S CONSTRUCTION REPRESENTATIVE.
5. SEE 'P' DRAWINGS FOR COORDINATION OF PLUMBING FIXTURES.
6. INSTALL METAL EDGE DRIP WHERE WALL TILE TRANSITIONS TO DIFFERENT FINISH.
7. SEE FINISH SCHEDULE ON A703.00 FOR ALL FINISHES.

GENERAL ACCESSORY NOTES

1. ACCESSORIES PROVIDED IN THE TOILET ACCESSORY SCHEDULE REPRESENT THOSE TO BE INCLUDED IN ALL FINISHED SPACES.
2. PROVIDED SOLID BLOCKING IN WALLS FOR ALL TOILET ACCESSORIES.
3. CONTRACTOR MUST SUBMIT SHOP DRAWINGS OF LOCATIONS AND MOUNTING HEIGHTS OF ALL ACCESSORIES TO ARCHITECT FOR APPROVAL.
4. ALL WATER CLOSETS SHALL BE MOUNTED AT A MINIMUM OF 18" ON CENTER FROM FINISHED FACE OF ADJACENT WALLS AND/OR PARTITIONS.
5. ALL LAVATORIES SHALL BE MOUNTED AT A MINIMUM OF 15" ON CENTER FROM FINISHED FACE OF ADJACENT WALLS AND/OR PARTITIONS.
6. ALL URINALS SHALL BE MOUNTED A MINIMUM OF 15" ON CENTER FROM FINISHED FACE OF ADJACENT WALLS AND/OR PARTITIONS.
7. FOR ADDITIONAL INFORMATION, REFER TO MOUNTING HEIGHTS FOR TOILET ACCESSORIES, ON SHEET G 102 - G 104.
8. FOR ADDITIONAL INFORMATION, REFER TO PROJECT SPECIFICATIONS, SECTION 10 28 00.

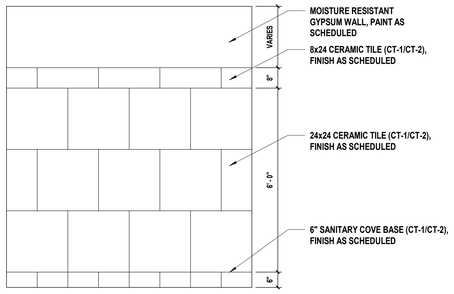

1 **Typical Wall Tile Detail**
SCALE: 1/2" = 1'-0"

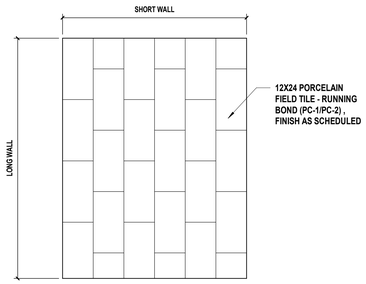

2 **Typical Floor Tile Layout**
SCALE: 1/2" = 1'-0"

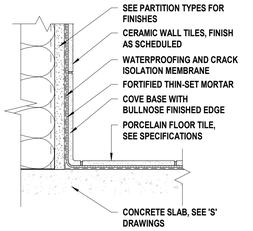

NOTE:
1. WATERPROOFING AND CRACK ISOLATION MEMBRANE TO OCCUR IN MEN'S TOILET ROOM 127, WOMEN'S TOILET ROOM 128, BATHROOMS 208 AND 209
2. CONTRACTOR TO INSTALL ALL REQUIRED ITEMS PER MANUFACTURERS REQUIREMENTS

3 **Cove Base Detail**
SCALE: 3" = 1'-0"

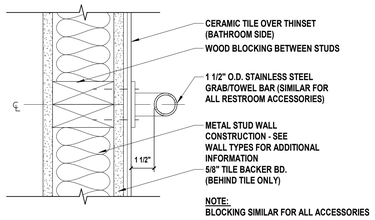

NOTE:
BLOCKING SIMILAR FOR ALL ACCESSORIES

4 **Typical Grab Bar Blocking Detail**
SCALE: 3" = 1'-0"

H2M architects + engineers
538 Broad Hollow Road, 4th Floor East
Melville, NY 11747
631.756.8000 • www.h2m.com
Architecture & Landscape Architecture: No Certificate Required
Engineering Certificate of Authorization No.: 0018178

CONSULTANTS:

MARK	DATE	DESCRIPTION
2	01-10-2025	SED ADDENDUM 2

REGISTERED ARCHITECT KEVIN MICHAEL MEDLER 038379 STATE OF NEW YORK

KEVIN M. MEDLER, R.A.
NY PROFESSIONAL ARCHITECT Lic. No. 038379

DESIGNED BY:	DRAWN BY:	CHECKED BY:	REVIEWED BY:
CWP	DOD/NPO	Checker	
PROJECT No: WPSD 2203	DATE: MARCH 2025	SCALE: AS SHOWN	

CLIENT
WHITE PLAINS CITY SCHOOL DISTRICT

ADDITION AT WHITE PLAINS HIGH SCHOOL

550 NORTH STREET, WHITE PLAINS, NY 10605

66-22-00-01-0-016-030

CONTRACT
CONTRACT G
GENERAL CONSTRUCTION

STATUS
FINAL BID SET

SHEET TITLE
TOILET ROOM DETAILS, SCHEDULES, AND NOTES

DRAWING No.
A 411.00

C:\Users\ddesouza\Documents\WPSD2203_Central21_A_DDeSouzaDBTUB.rvt
3/20/2025 3:14:25 PM

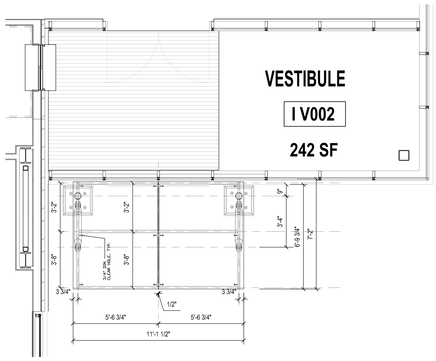

Typical Canopy Roof Plan
SCALE: 1/4"=1'-0"

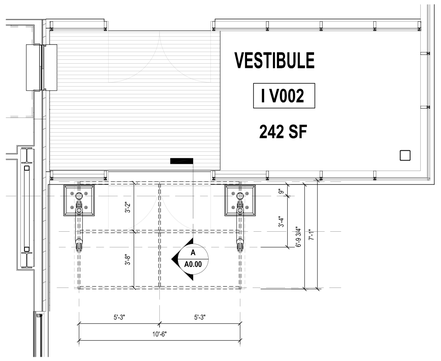

Typical Canopy Plan
SCALE: 1/4"=1'-0"

NOTES:

- CANOPY MANUFACTURER TO PROVIDE P.E. CALCULATIONS AND STAMPED DRAWINGS FOR CANOPY AND FOUNDATION.
- ALL DETAILS AND DIMENSIONS IN THIS PAGE ARE TO DEPICT THE ARCHITECT'S DESIGN INTENT. FINAL DESIGN TO BE REVIEWED AND APPROVED BY A PROFESSIONAL ENGINEER.

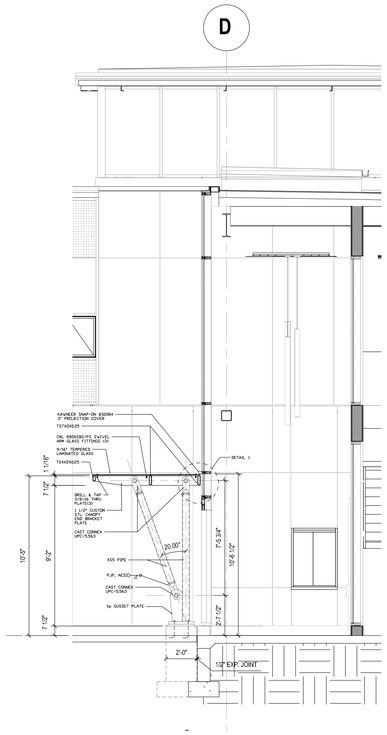

A Section
SCALE: 1/4"=1'-0"

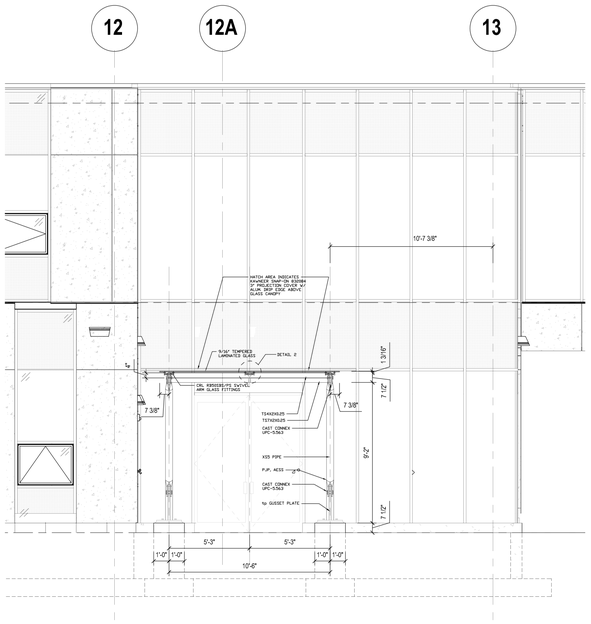

Partial West Elevation
SCALE: 1/4"=1'-0"

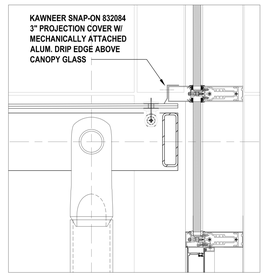

1 DETAIL
SCALE: 1 1/2"=1'-0"

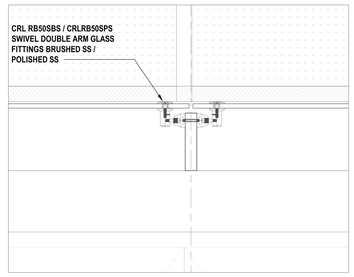

2 DETAIL
SCALE: 1 1/2"=1'-0"

H2M architects + engineers

538 Broad Hollow Road, 4th Floor East
Melville, NY 11747
631.756.8000 • www.h2m.com
Architecture & Landscape Architecture: No Certificate Required
Engineering Certificate of Authorization No.: 0018178

CONSULTANTS:

MARK	DATE	DESCRIPTION
2	01-10-2025	SED ADDENDUM 2

REGISTERED ARCHITECT KEVIN MICHAEL MEDLER 038379 STATE OF NEW YORK

KEVIN M. MEDLER, R.A.
NY PROFESSIONAL ARCHITECT Lic. No. 038379

ST010924 Exp. Date

The Professional Seal and Signature appearing on a document signifies that the professional has prepared or supervised the preparation of the document and is responsible for its contents.

DESIGNED BY:	DRAWN BY:	CHECKED BY:	REVIEWED BY:
CWP	DOD/SG	CWP/KMM	

PROJECT No:	DATE:	SCALE:
WPSD 2203	MARCH 2025	AS SHOWN

CLIENT

WHITE PLAINS CITY SCHOOL DISTRICT

ADDITION AT WHITE PLAINS HIGH SCHOOL

White Plains Public Schools WP REAL LIFE LEARNING

550 NORTH STREET, WHITE PLAINS, NY 10605

66-22-00-01-0-016-030

CONTRACT

ALL CONTRACTS

STATUS

FINAL BID SET

SHEET TITLE

ENLARGED CANOPY PLANS, SECTION, ELEVATION, DETAILS, AND NOTES (ALTERNATE G-001)

DRAWING No.

A 412.00

C:\Users\ddesouza\Documents\WPSD2203_CentralZ1_A_DDdSouzaDRT18.rvt

3/6/2025 2:50:06 PM

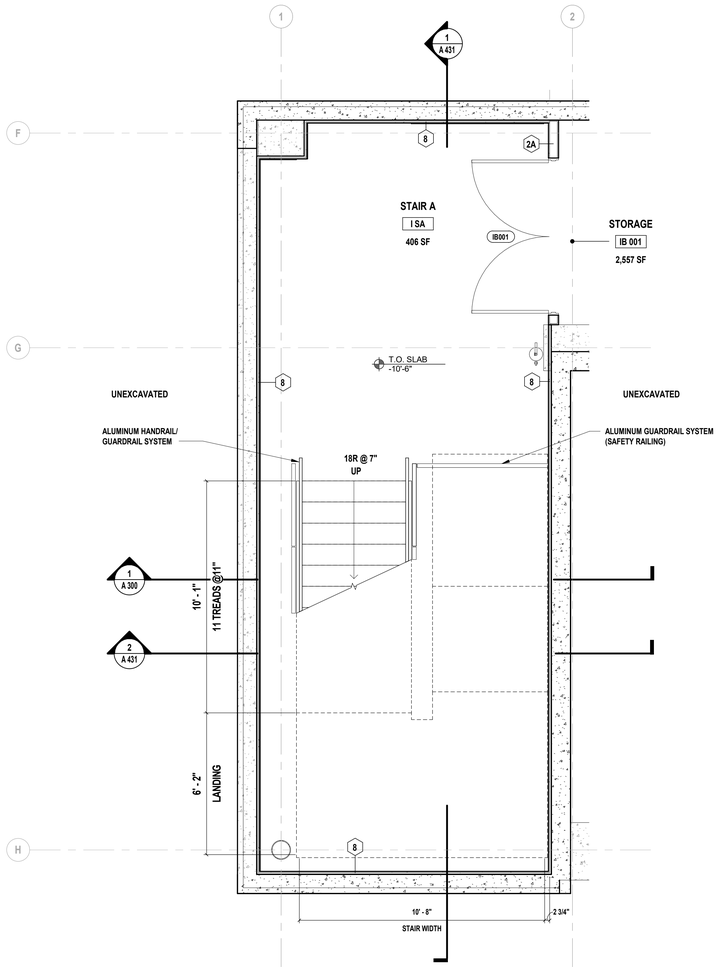

1 Enlarged Basement Floor Stair A Plan
SCALE: 3/8" = 1'-0"

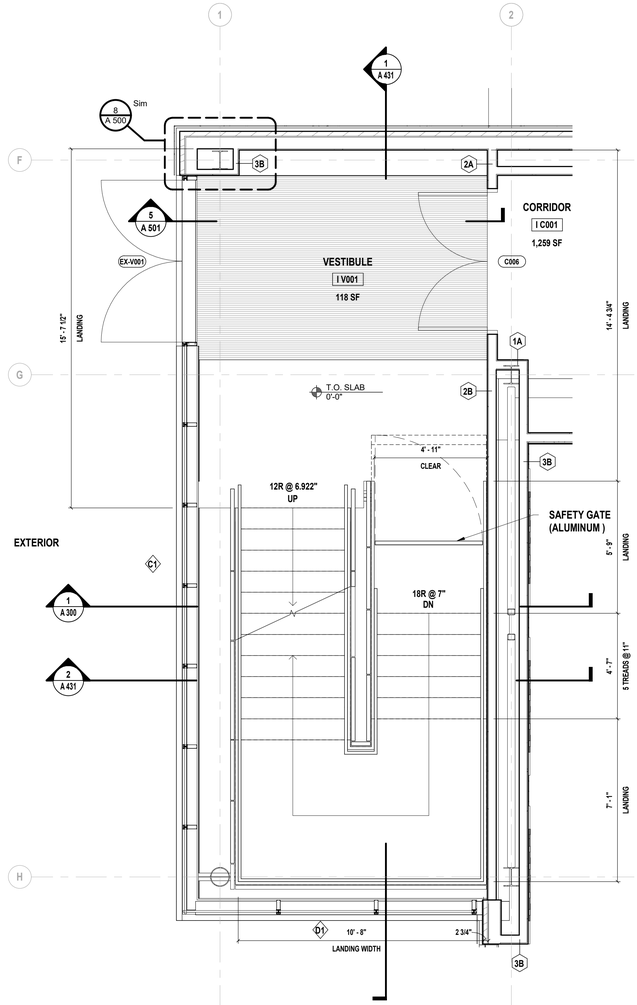

2 Enlarged Ground Floor Stair A Plan
SCALE: 3/8" = 1'-0"

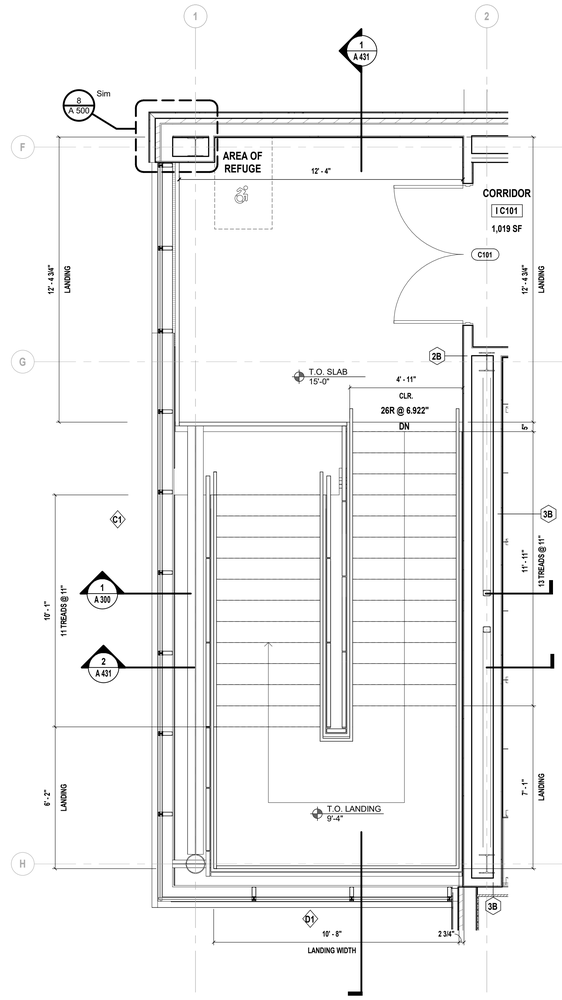

3 Enlarged First Floor Stair A Plan
SCALE: 3/8" = 1'-0"

NOTE: ALL MEMBER SIZES, WELDS, FASTENERS, AND LANDING FLOOR CONSTRUCTION SUBJECT TO APPROVAL OF DELEGATED DESIGN SUBMITTALS SIGNED AND SEALED BY A LICENSED NYS PE. REFER TO SPECIFICATION SECTION 055100 FOR MORE INFORMATION.

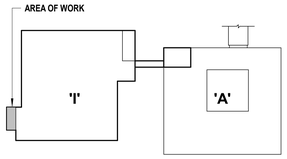

Key Plan
Scale: N.T.S.

H2M architects + engineers
538 Broad Hollow Road, 4th Floor East
Melville, NY 11747
631.756.8000 • www.h2m.com
Architecture & Landscape Architecture: No Certificate Required
Engineering Certificate of Authorization No.: 0018178

CONSULTANTS:

MARK	DATE	DESCRIPTION

REGISTERED ARCHITECT KEVIN MICHAEL MEDLER 038379 STATE OF NEW YORK

KEVIN M. MEDLER, R.A.
NY PROFESSIONAL ARCHITECT Lic. No. 038379
Exp. Date

DESIGNED BY:	DRAWN BY:	CHECKED BY:	REVIEWED BY:
CWP	DOD/NPO	CWP/KMM	
PROJECT No:	DATE:	SCALE:	
WPSD 2203	MARCH 2025	AS SHOWN	

CLIENT
WHITE PLAINS CITY SCHOOL DISTRICT

ADDITION AT WHITE PLAINS HIGH SCHOOL

White Plains Public Schools WP REAL LIFE LEARNING

550 NORTH STREET, WHITE PLAINS, NY 10605

66-22-00-01-0-016-030

CONTRACT
CONTRACT G
GENERAL CONSTRUCTION

STATUS
FINAL BID SET

SHEET TITLE
STAIR 'A' PLANS, AND NOTES

DRAWING No.
A 430.00

C:\Users\ddesouza\Documents\WPSD2203_Central21_A_DeSouza\DBT\18.rvt
3/6/2025 2:50:09 PM

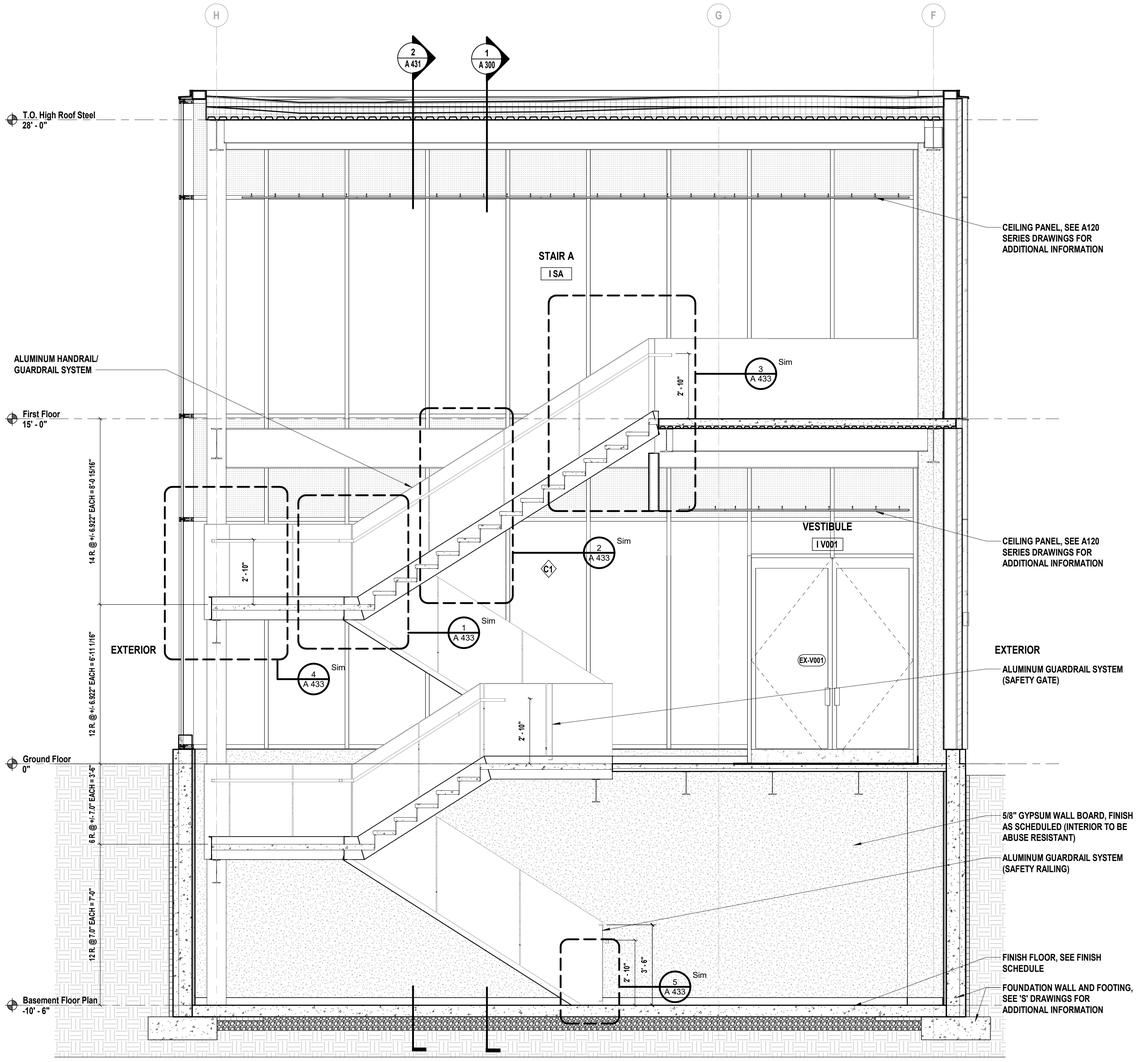

1 **Stair 'A' Section**
SCALE: 3/8" = 1'-0"

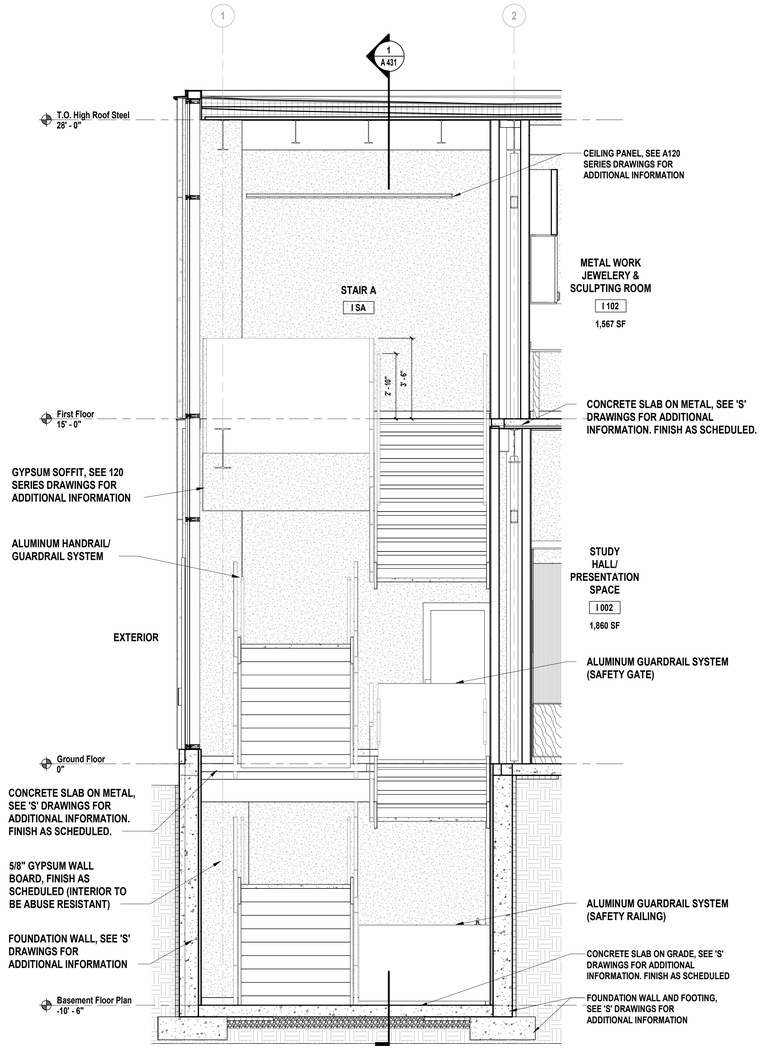

2 **Stair 'A' Section**
SCALE: 3/8" = 1'-0"

NOTE: ALL MEMBER SIZES, WELDS, FASTENERS, AND LANDING FLOOR CONSTRUCTION SUBJECT TO APPROVAL OF DELEGATED DESIGN SUBMITTALS SIGNED AND SEALED BY A LICENSED NYS PE. REFER TO SPECIFICATION SECTION 055100 FOR MORE INFORMATION.

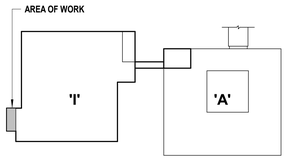

Key Plan
Scale: N.T.S.

H2M architects + engineers
538 Broad Hollow Road, 4th Floor East
Melville, NY 11747
631.756.8000 • www.h2m.com
Architecture & Landscape Architecture: No Certificate Required
Engineering Certificate of Authorization No.: 0018178

CONSULTANTS:

MARK	DATE	DESCRIPTION

KEVIN M. MEDLER, R.A.
NY PROFESSIONAL ARCHITECT No. 038379

DESIGNED BY:	DRAWN BY:	CHECKED BY:	REVIEWED BY:
CWP	DOD/NPO	CWP/KMM	
PROJECT No: WPSD 2203	DATE: MARCH 2025	SCALE: AS SHOWN	

CLIENT
WHITE PLAINS CITY SCHOOL DISTRICT

ADDITION AT WHITE PLAINS HIGH SCHOOL

550 NORTH STREET, WHITE PLAINS, NY 10605

66-22-00-01-0-016-030

CONTRACT
CONTRACT G
GENERAL CONSTRUCTION

STATUS
FINAL BID SET

SHEET TITLE
STAIR 'A' SECTIONS, AND DETAILS

DRAWING No.
A 431.00

C:\Users\ddesouza\Documents\WPSD2203_Central\21_A_DOeSouza3ZBTL8.rvt
3/6/2025 2:50:12 PM

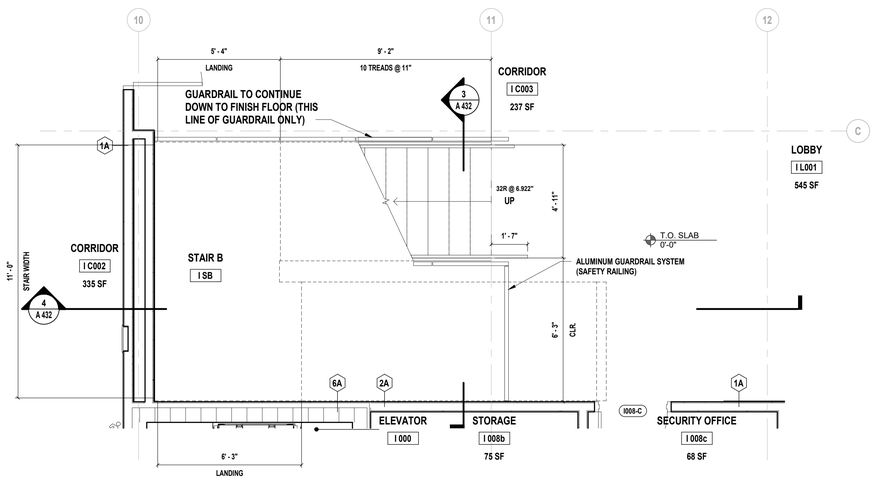

1 Enlarged Ground Floor Stair B Plan
SCALE: 3/8" = 1'-0"

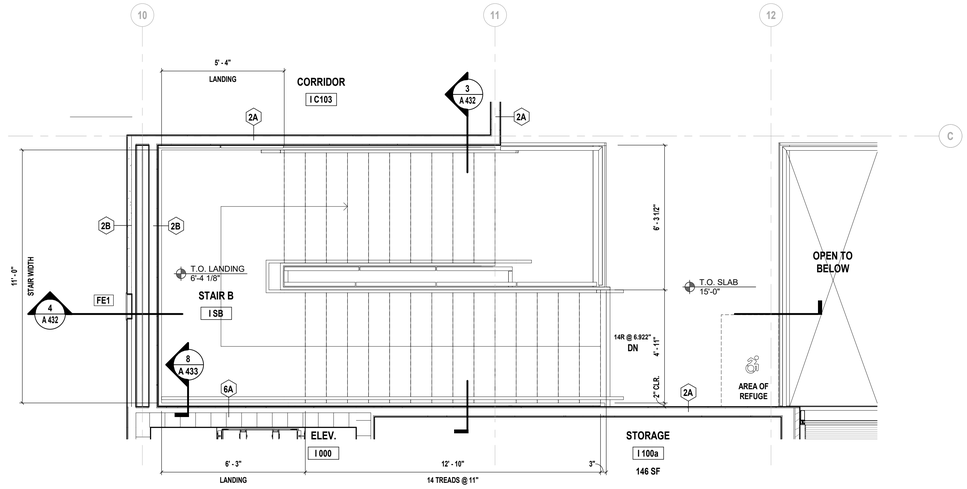

2 Enlarged First Floor Stair B Plan
SCALE: 3/8" = 1'-0"

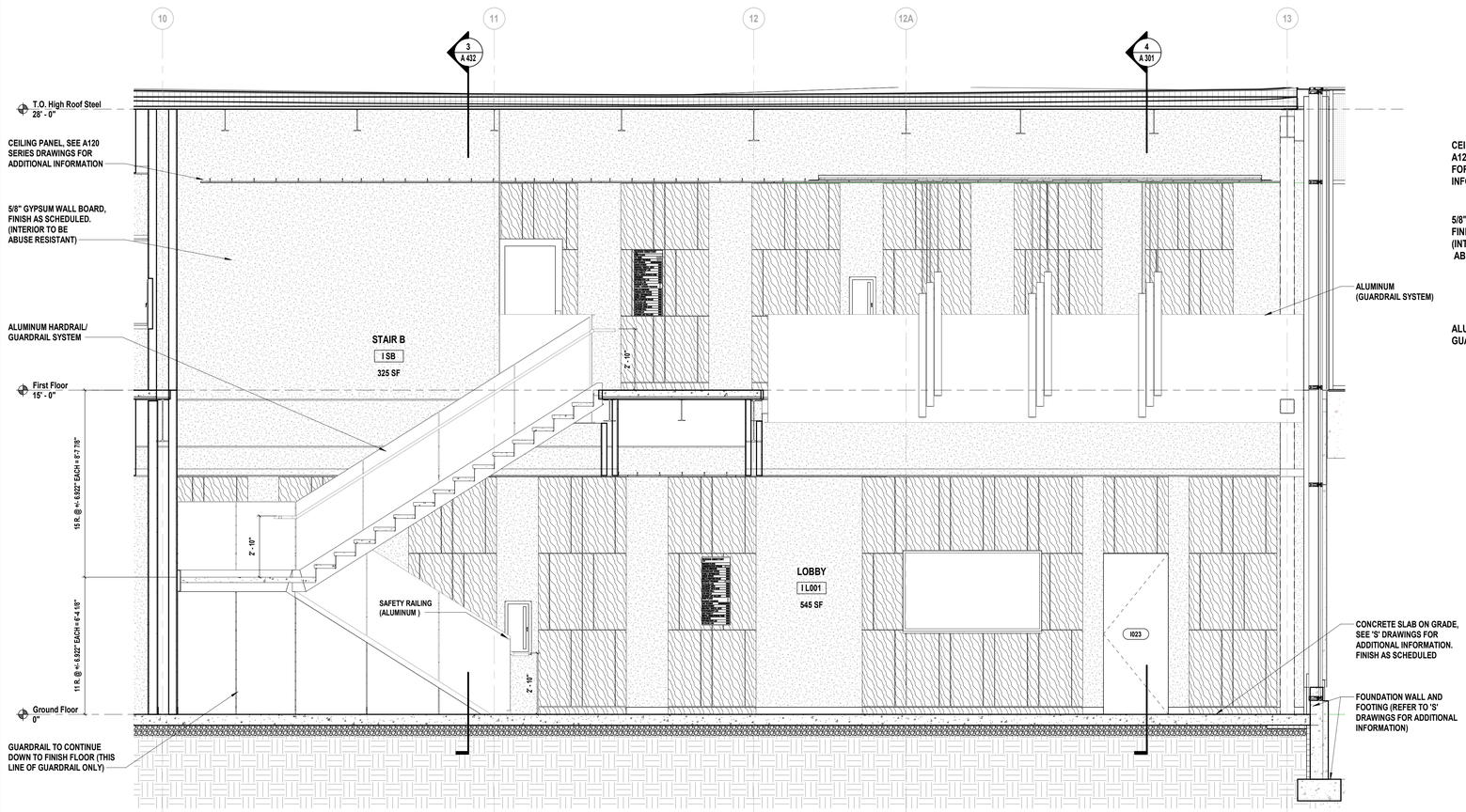

4 Stair 'B' Section
SCALE: 3/8" = 1'-0"

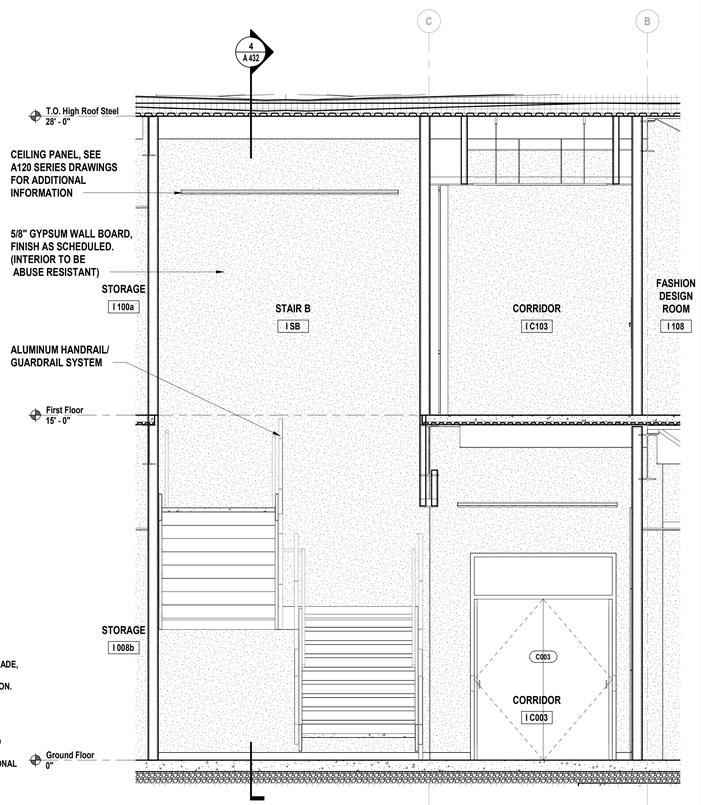

3 Stair 'B' Section
SCALE: 3/8" = 1'-0"

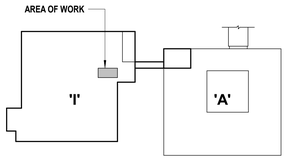

Key Plan
Scale: N.T.S.

NOTE: ALL MEMBER SIZES, WELDS, FASTENERS, AND LANDING FLOOR CONSTRUCTION SUBJECT TO APPROVAL OF DELEGATED DESIGN SUBMITTALS SIGNED AND SEALED BY A LICENSED NYS PE. REFER TO SPECIFICATION SECTION 055100 FOR MORE INFORMATION.

H2M architects + engineers
538 Broad Hollow Road, 4th Floor East
Melville, NY 11747
631.756.8000 • www.h2m.com
Architecture & Landscape Architecture: No Certificate Required
Engineering Certificate of Authorization No.: 0018178

CONSULTANTS:

MARK	DATE	DESCRIPTION

REGISTERED ARCHITECT KEVIN MICHAEL MEDLER 036379 STATE OF NEW YORK

KEVIN M. MEDLER, R.A.
NY PROFESSIONAL ARCHITECT Lic. No. 036379
"IN TRANSMITTING THIS DOCUMENT EXCEPT AS A LICENSED PROFESSIONAL IN FLORIDA"
Exp. Date: 8/31/2024

DESIGNED BY:	DRAWN BY:	CHECKED BY:	REVIEWED BY:
CWP	DOD/NPO	CWP/KMM	

PROJECT No:	DATE:	SCALE:
WPSD 2203	MARCH 2025	AS SHOWN

CLIENT
WHITE PLAINS CITY SCHOOL DISTRICT

ADDITION AT WHITE PLAINS HIGH SCHOOL

550 NORTH STREET, WHITE PLAINS, NY 10605

66-22-00-01-0-016-030

CONTRACT
CONTRACT G
GENERAL CONSTRUCTION

STATUS
FINAL BID SET

SHEET TITLE
STAIR 'B' PLANS, AND SECTIONS

DRAWING No.
A 432.00

C:\Users\kdesouza\Documents\WPSD2203_Central21_A_ODwSouzaDRT18.rvt

3/6/2025 2:50:18 PM

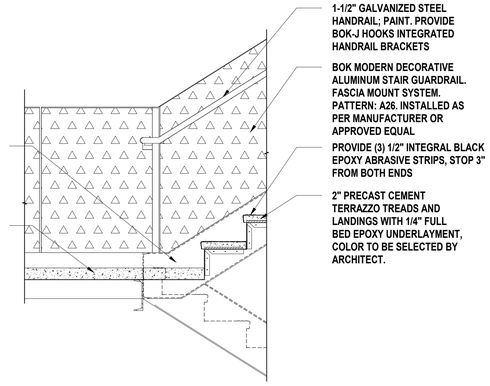

1 **Stair Base Detail**
SCALE: 3/4" = 1'-0"

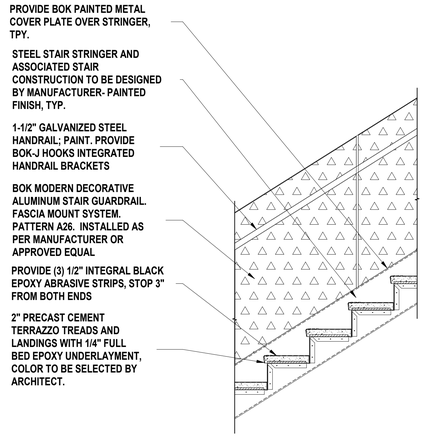

2 **Stair Detail**
SCALE: 3/4" = 1'-0"

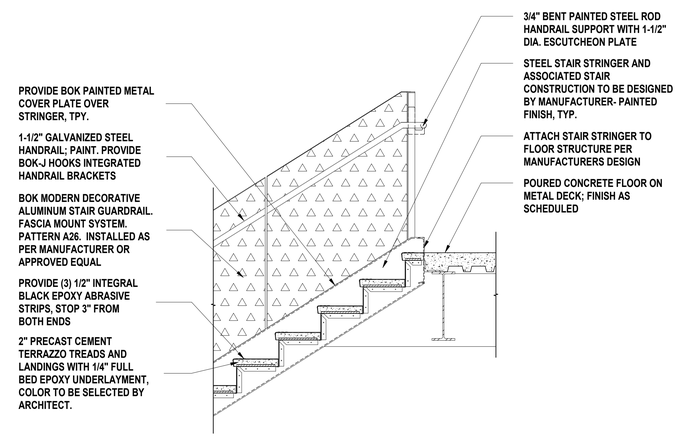

3 **Stair Landing Detail**
SCALE: 3/4" = 1'-0"

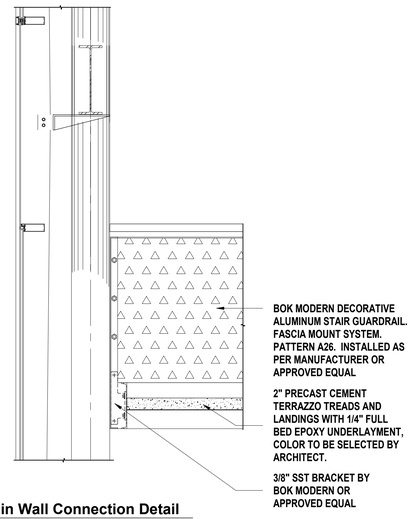

4 **Stair Landing to Curtain Wall Connection Detail**
SCALE: 3/4" = 1'-0"

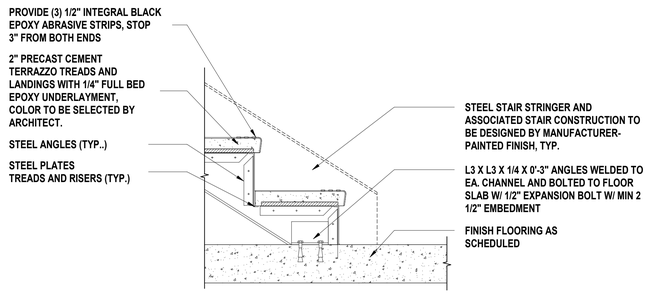

5 **Stair Base Connection Detail**
SCALE: 1 1/2" = 1'-0"

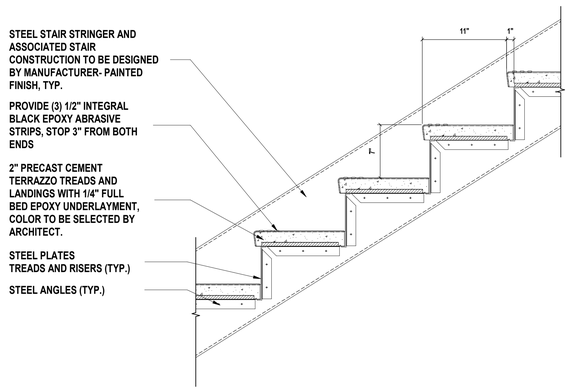

6 **Stair Tread Detail-Typical**
SCALE: 1 1/2" = 1'-0"

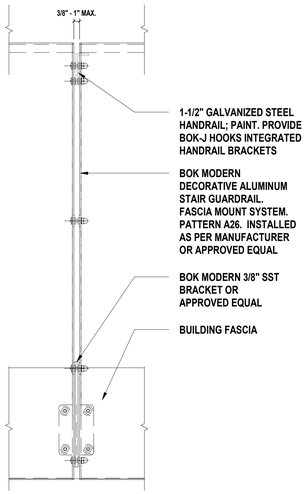

7 **Stair Rail Panel to Panel Elevation**
SCALE: 3" = 1'-0"

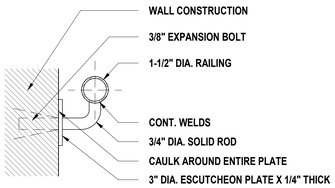

8 **Stair Rail Wall Anchoring Detail Section**
SCALE: 3" = 1'-0"

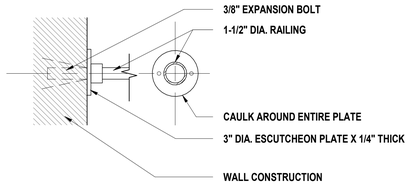

9 **Stair Rail Wall Anchoring Detail Elevation**
SCALE: 3" = 1'-0"

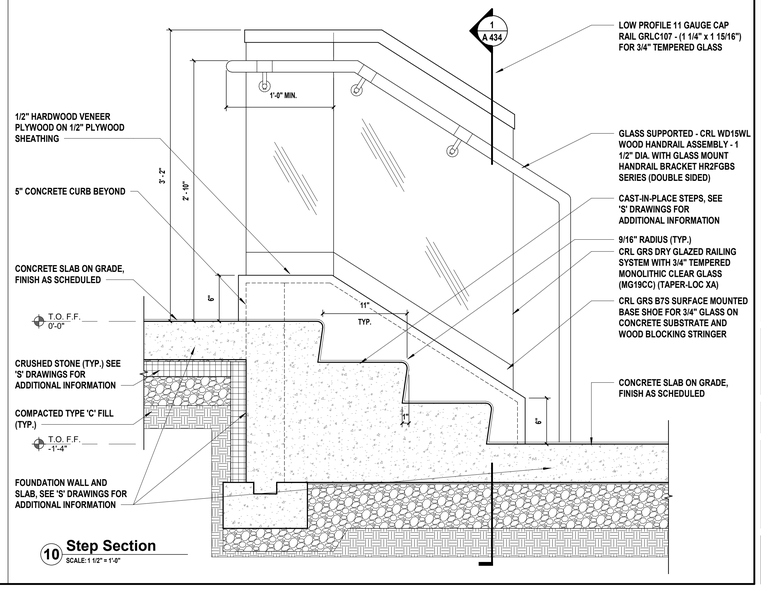

10 **Step Section**
SCALE: 1 1/2" = 1'-0"

H 2 M architects + engineers

538 Broad Hollow Road, 4th Floor East
Melville, NY 11747
631.756.8000 • www.h2m.com
Architecture & Landscape Architecture: No Certificate Required
Engineering Certificate of Authorization No.: 0018178

CONSULTANTS:

MARK	DATE	DESCRIPTION

REGISTERED ARCHITECT KEVIN MICHAEL MEDLER STATE OF NEW YORK 038379

KEVIN M. MEDLER, R.A.
NY PROFESSIONAL ARCHITECT Lic. No. 038379

07/31/2024 Exp. Date

DESIGNED BY:	DRAWN BY:	CHECKED BY:	REVIEWED BY:
CWP	DOD/NPO	CWP/KMM	
PROJECT No: WPSD 2203	DATE: MARCH 2025	SCALE: AS SHOWN	

CLIENT

WHITE PLAINS CITY SCHOOL DISTRICT

ADDITION AT WHITE PLAINS HIGH SCHOOL

550 NORTH STREET, WHITE PLAINS, NY 10605

66-22-00-01-0-016-030

CONTRACT

CONTRACT G
GENERAL CONSTRUCTION

STATUS

FINAL BID SET

SHEET TITLE

STAIR DETAILS

DRAWING No.

A 433.00

C:\Users\sbdesaouza\Documents\WPSD2203_Central\21_A_DOwSouzaDR71J8.rvt
3/6/2025 2:05:20 PM

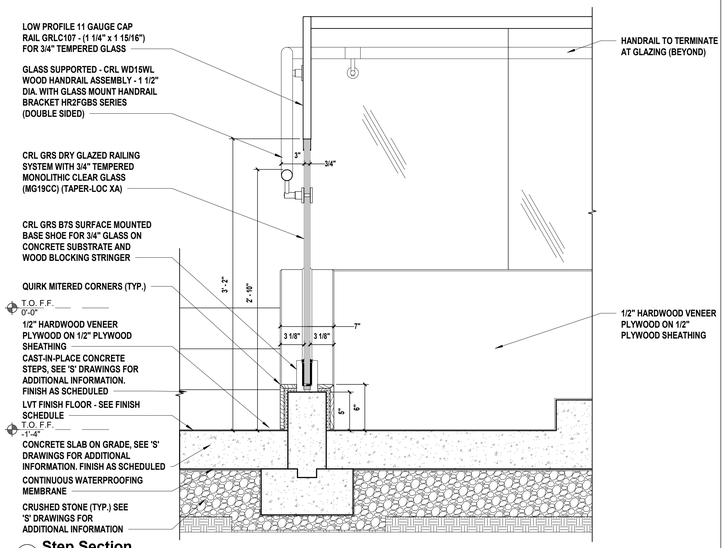

1 **Step Section**
SCALE: 1 1/2" = 1'-0"

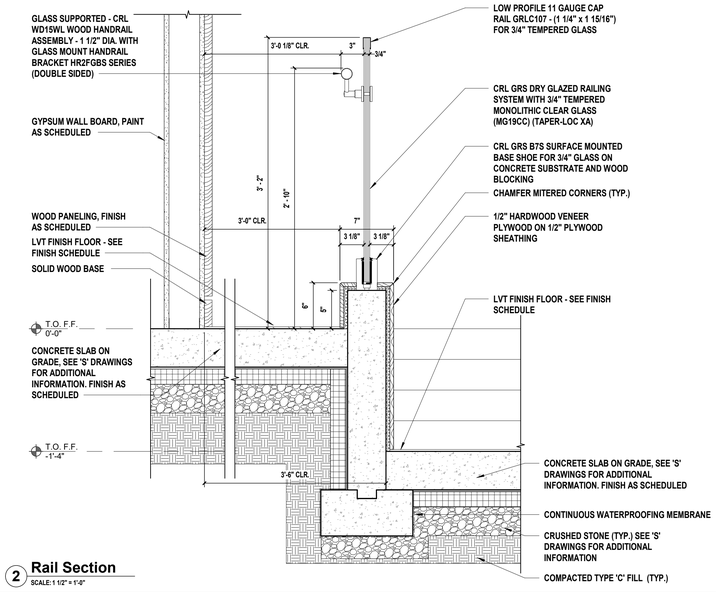

2 **Rail Section**
SCALE: 1 1/2" = 1'-0"

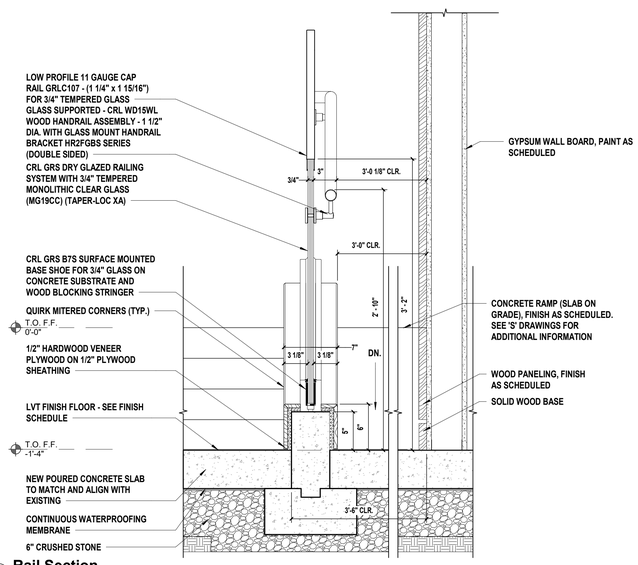

3 **Rail Section**
SCALE: 1 1/2" = 1'-0"

H 2 M architects + engineers

538 Broad Hollow Road, 4th Floor East
Melville, NY 11747
631.756.8000 • www.h2m.com
Architecture & Landscape Architecture: No Certificate Required
Engineering Certificate of Authorization No.: 0018178

CONSULTANTS:

MARK	DATE	DESCRIPTION

REGISTERED ARCHITECT KEVIN MICHAEL MEDLER STATE OF NEW YORK 038379

KEVIN M. MEDLER, R.A.
NY PROFESSIONAL ARCHITECT Lic. No. 038379

ST310924
Exp. Date

THE TRANSMITTAL OF THIS DOCUMENT DOES NOT IN A LICENSE FROM GENERAL, W.C.L.A.C.O.N.

DESIGNED BY:	DRAWN BY:	CHECKED BY:	REVIEWED BY:
CWP	DOD/NPO	CWP/KMM	

PROJECT No:	DATE:	SCALE:
WPSD 2203	MARCH 2025	AS SHOWN

CLIENT

WHITE PLAINS CITY SCHOOL DISTRICT

ADDITION AT WHITE PLAINS HIGH SCHOOL

550 NORTH STREET, WHITE PLAINS, NY 10605

66-22-00-01-0-016-030

CONTRACT

CONTRACT G
GENERAL CONSTRUCTION

STATUS

FINAL BID SET

SHEET TITLE

STAIR, AND RAMP DETAILS

DRAWING No.

A 434.00

C:\Users\ddesouza\Documents\WPSD2203_Central21_A_DDoSouzaDSTUB.rvt

3/6/2025 2:50:22 PM

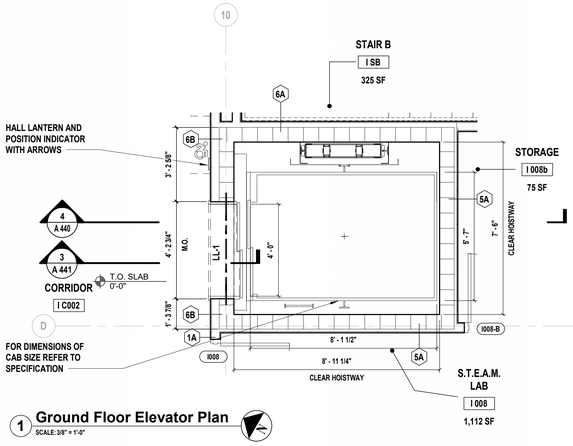

1 **Ground Floor Elevator Plan**
SCALE: 3/8" = 1'-0"

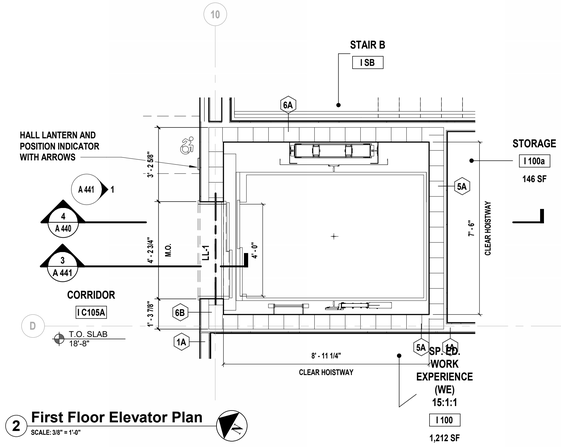

2 **First Floor Elevator Plan**
SCALE: 3/8" = 1'-0"

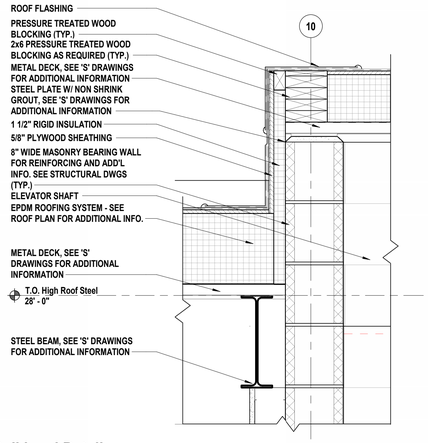

3 **Bulkhead Detail**
SCALE: 1 1/2" = 1'-0"

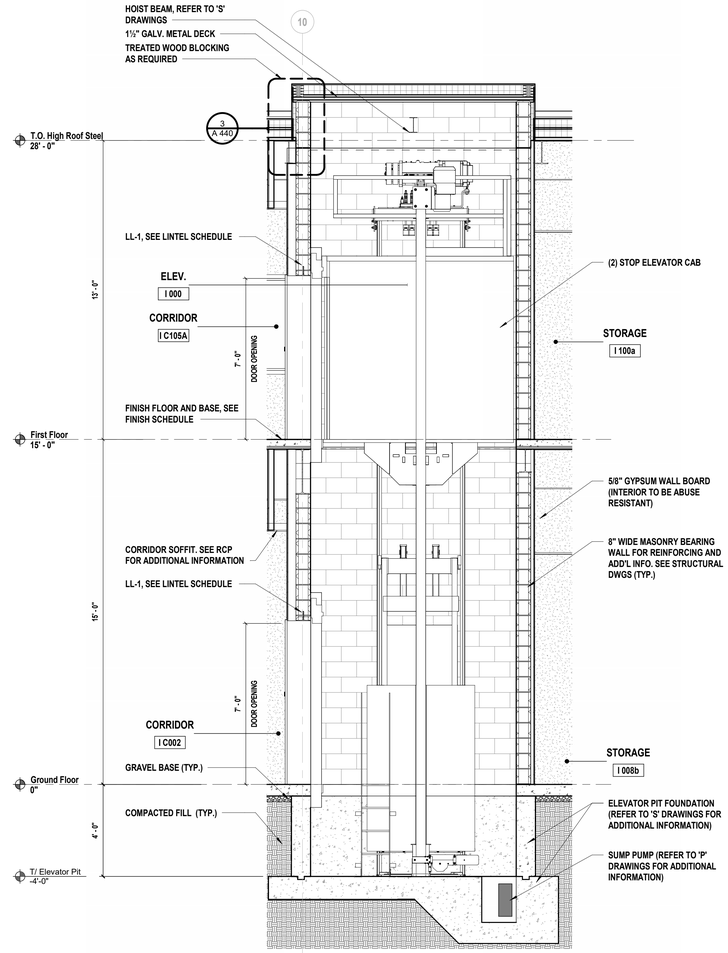

4 **Elevator Section**
SCALE: 3/8" = 1'-0"

GENERAL ELEVATOR REQUIREMENT NOTES

1. PROVIDE PLUMB, PROPERLY FRAMED AND ENCLOSED LEGAL HOISTWAY INCLUDING VENTING (AS REQUIRED BY THE GOVERNING CODES) AND SAFETY BEAM, AS SHOWN.
2. PROVIDE ADEQUATE SUPPORT FOR JACK, GUIDE RAIL BRACKETS (NOT TO EXCEED THE VERTICAL SPACING INDICATED), AND BUFFERS. SEPARATOR BEAMS TO BE PROVIDED WHERE REQUIRED BY MANUFACTURER.
3. ADEQUATE PROVISIONS FOR GUARDING AND PROTECTING THE HOISTWAY DURING CONSTRUCTION ARE TO BE ERECTED, MAINTAINED, AND REMOVED BY CONTRACTOR.
4. PROVIDE ALL CUTTING OR PATCHING AS REQUIRED TO ACCOMMODATE ELEVATOR INSTALLATION, INCLUDING CUTOUTS REQUIRED FOR OIL AND POWER LINE RUNS (COORDINATE CUTOUT LOCATIONS WITH ELEVATOR MANUFACTURER).
5. HOISTWAY WALLS ARE TO BE CONSTRUCTED IN ACCORDANCE WITH THE REQUIRED FIRE RATING (INCLUDING LOCATIONS WHERE PENETRATED BY ELEVATOR FIXTURE BOXES), AND TO INCLUDE ADEQUATE FASTENINGS TO HOISTWAY ASSEMBLIES. COORDINATE LOCATION AND INSTALLATION OF HORIZONTAL SUPPORTS ABOVE THE CLEAR OPENINGS AT EACH LANDING AS REQUIRED TO SUPPORT THE DOOR FRAME ASSEMBLY. THE ENTRANCE WALL(S) MUST NOT BE COMPLETELY CONSTRUCTED UNTIL THE FRAMES AND SILLS ARE SET.
6. COORDINATE WITH ELEVATOR MANUFACTURER ALL ROUGH DOOR OPENINGS AND POCKETS IN WALL CONSTRUCTION (AS REQUIRED TO INSTALL ENTRANCE FRAMES, HALL FIXTURES, ETC.).
7. ELEVATOR CAB FLOORING MUST NOT EXCEED A THICKNESS OF 5/16". MODIFY FLOORING AS REQUIRED TO ACCOMMODATE INSTALLATION.
8. PROVIDE A FIXED VERTICAL STEEL LADDER TO PIT EXTENDING 4'-0" ABOVE THE SILL OF THE BOTTOM ENTRANCE AS LOCATED IN THE PLAN VIEW. LADDER WIDTH AND PROJECTION FROM WALL PER LOCAL CODE, AND ELEVATOR MANUFACTURER'S REQUIREMENTS.
9. DRY PIT TO BE REINFORCED TO SUSTAIN VERTICAL FORCES AS DETERMINED BY ELEVATOR MANUFACTURER. THE ACCUMULATION OF WATER MUST BE PREVENTED. REFER TO STRUCTURAL DRAWINGS FOR ADDITIONAL REINFORCEMENT INFORMATION
10. PIT FLOOR BENEATH CYLINDERS AND BUFFER TO BE FLAT AND LEVEL WITHIN 1/8" FULL WIDTH HOISTWAY. SLOPE REMAINING PIT FLOOR TO SUMP AREA FOR REMOVAL OF FLUID IN PIT. FINAL LOCATION AND SIZE OF SUMP TO BE COORDINATED WITH MANUFACTURER TO AVOID ELEVATOR COMPONENTS AND ACCESS AREA.
11. CONTRACTOR TO PROVIDE A THREE PHASE POWER SYSTEM, 120V 15 AMP CIRCUIT, FIRE ALARM AND OUTSIDE DEDICATED TELEPHONE LINE ROUTED TO THE TOP OF THE CONTROLLER AT THE CONTROLLER LANDING LEVEL. PULL POWER FROM NEAREST EXISTING MDP, COORDINATE ALL FIRE ALARM WORK WITH DISTRICT'S FIRE ALARM VENDOR
12. IN THE PIT, CONTRACTOR TO PROVIDE A SEPARATE BRANCH CIRCUIT FOR CONVENIENCE G.F.C.I. OUTLETS AND LIGHT FIXTURE WITH LIGHT SWITCH (ADJACENT TO THE PIT LADDER AS INDICATED).
13. ALL 120 VOLT, 15 OR 20 AMP, SINGLE PHASE DUPLEX RECEPTACLES INSTALLED IN PITS OR MACHINERY SPACES, SHALL BE OF THE GROUND-FAULT- CIRCUIT-INTERRUPTER TYPE.
14. CONTRACTOR TO PROVIDE ELECTRIC POWER FOR TOOLS, LIGHT, HOIST, ETC., DURING ERECTION AS WELL AS ELECTRIC CURRENT FOR STARTING AND ADJUSTING THE ELEVATOR.
15. CONTRACTOR TO PROVIDE ONE (1) DEDICATED OUTSIDE TELEPHONE LINE ROUTED TO THE TOP OF THE CONTROLLER AT THE CONTROLLER LANDING LEVEL.
16. CONTRACTOR TO PROVIDE ALL NECESSARY CONDUIT AND WIRING FROM HOISTWAY TO ELEVATOR MONITORING DEVICES (FOR SECURITY, LIFE SAFETY, AND/OR FIRE REQUIREMENTS), AS APPLICABLE.
17. CONTRACTOR TO PROVIDE SMOKE DETECTORS, AS REQUIRED BY NYS BUILDING CODE APPENDIX K, SECTION 2.27.3.2.1.

ELEVATOR HEIGHT REQUIREMENTS

FLOOR	FLOOR HEIGHT
GROUND FLOOR	0'-0"
FIRST FLOOR	15'-0"
TOTAL RISE	15'-0"

PIT/OVERHEAD REQUIREMENTS

SPEED	PIT DEPTH	MAXIMUM TOTAL RISE	OVERHEAD HEIGHT
150 F.P.M.	4'-0"	15'-0"	TOP LANDING + 15'-0"

NOTES:

1. HOISTWAY SIZE MUST BE PLUMB WITHIN MIN. 2" AND MUST NOT BE LESS THAN FIGURES SHOWN.
2. SUMP OR DRAIN LOCATION TO BE COORDINATED WITH MANUFACTURER TO AVOID ELEVATOR COMPONENTS AND ACCESS AREA.
3. HOISTWAY FASCIA IS NOT SELF-SUPPORTING FOR LONG, CONTINUOUS RUNS VOID OF ENTRANCES. ADEQUATE SUPPORT FOR THE FASCIA MUST BE PROVIDED.

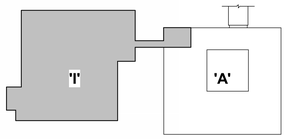

Key Plan
Scale: N.T.S.

H2M architects + engineers
538 Broad Hollow Road, 4th Floor East
Melville, NY 11747
631.756.8000 • www.h2m.com
Architecture & Landscape Architecture: No Certificate Required
Engineering Certificate of Authorization No.: 0018178

CONSULTANTS:

MARK	DATE	DESCRIPTION

REGISTERED ARCHITECT KEVIN MICHAEL MEDLER 038379 STATE OF NEW YORK

KEVIN M. MEDLER, R.A.
NY PROFESSIONAL ARCHITECT Lic. No. 038379

07/31/2024 Exp. Date

DESIGNED BY:	DRAWN BY:	CHECKED BY:	REVIEWED BY:
CWP	DOD/NPO	Checker	
PROJECT No: WPSD 2203	DATE: MARCH 2025	SCALE: AS SHOWN	

CLIENT
WHITE PLAINS CITY SCHOOL DISTRICT

ADDITION AT WHITE PLAINS HIGH SCHOOL

550 NORTH STREET, WHITE PLAINS, NY 10605

66-22-00-01-0-016-030

CONTRACT
CONTRACT G
GENERAL CONSTRUCTION

STATUS
FINAL BID SET

SHEET TITLE
ELEVATOR PLANS, SECTIONS, & DETAILS

DRAWING No.
A 440.00

C:\Users\ddesouza\Documents\WPSD2203_Central21_A_DDeSouzaDBT1L8.rvt
3/6/2025 2:50:28 PM

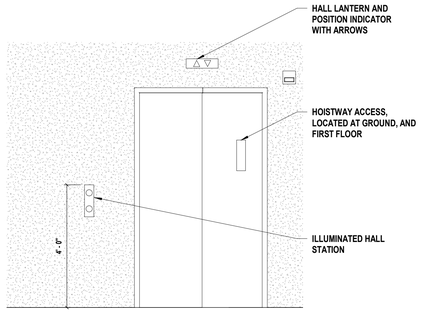

1 **Entrance Elevation View**
SCALE: 1/2" = 1'-0"

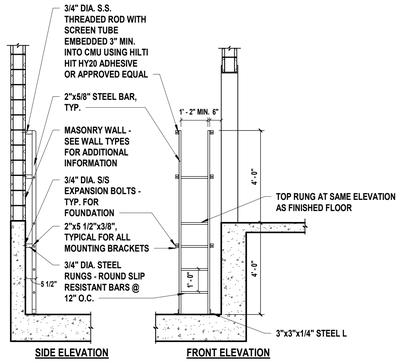

2 **Elevator Pit Ladder Detail**
SCALE: 3/8" = 1'-0"

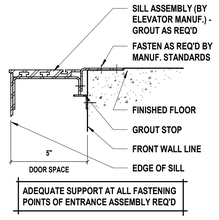

3 **Elevator Sill Detail**
SCALE: 3" = 1'-0"

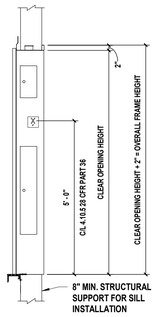

4 **Entrance Side View**
SCALE: 1/2" = 1'-0"

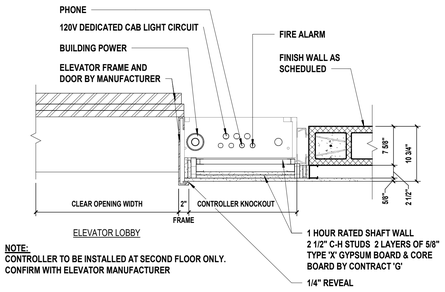

NOTE:
CONTROLLER TO BE INSTALLED AT SECOND FLOOR ONLY.
CONFIRM WITH ELEVATOR MANUFACTURER

5 **Entrance Plan View - Sim.**
SCALE: 1" = 1'-0"

H2M architects + engineers

538 Broad Hollow Road, 4th Floor East
Melville, NY 11747
631.756.8000 • www.h2m.com
Architecture & Landscape Architecture: No Certificate Required
Engineering Certificate of Authorization No.: 0018178

CONSULTANTS:

MARK	DATE	DESCRIPTION

REGISTERED ARCHITECT KEVIN MICHAEL MEDLER 038379 STATE OF NEW YORK

07/01/2024
Exp. Date

KEVIN M. MEDLER, R.A.
NY PROFESSIONAL ARCHITECT Lic. No. 038379
"No. 038379 FOR ARCHITECT MEDLER, KEVIN M. MEDLER, R.A. LICENSED PROFESSIONAL ENGINEER, R.A. LICENSE."

DESIGNED BY:	DRAWN BY:	CHECKED BY:	REVIEWED BY:
CWP	DOD/NPO	Checker	
PROJECT No:	DATE:	SCALE:	
WPSD 2203	MARCH 2025	AS SHOWN	

CLIENT

WHITE PLAINS CITY SCHOOL DISTRICT

ADDITION AT WHITE PLAINS HIGH SCHOOL

550 NORTH STREET, WHITE PLAINS, NY 10605

66-22-00-01-0-016-030

CONTRACT
CONTRACT G
GENERAL CONSTRUCTION

STATUS
FINAL BID SET

SHEET TITLE
ELEVATOR DETAILS

DRAWING No.
A 441.00

C:\Users\ddesouza\Documents\WPSD2203_Central21_A_DDeSouzaD8TU8.rvt
3/6/2025 2:50:31 PM

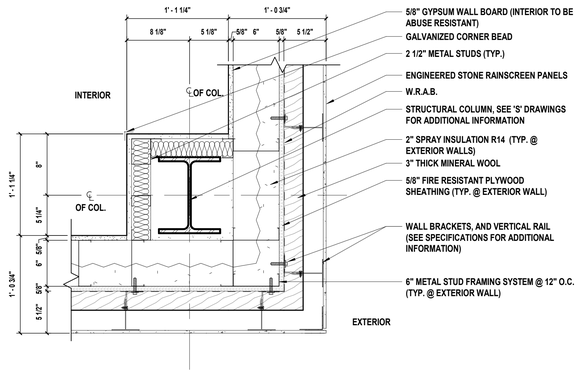

1 **Enlarged Plan Detail**
SCALE: 1 1/2" = 1'-0"

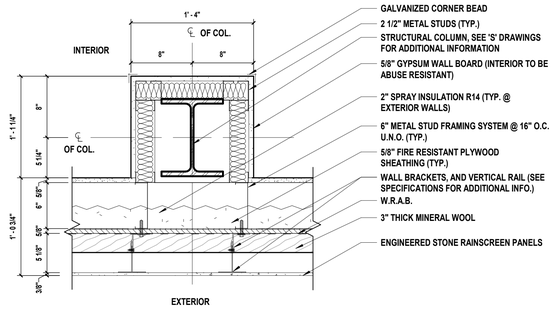

2 **Enlarged Plan Detail**
SCALE: 1 1/2" = 1'-0"

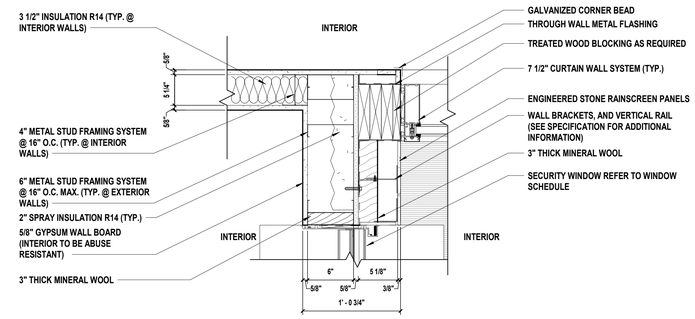

3 **Enlarged Plan Detail**
SCALE: 1 1/2" = 1'-0"

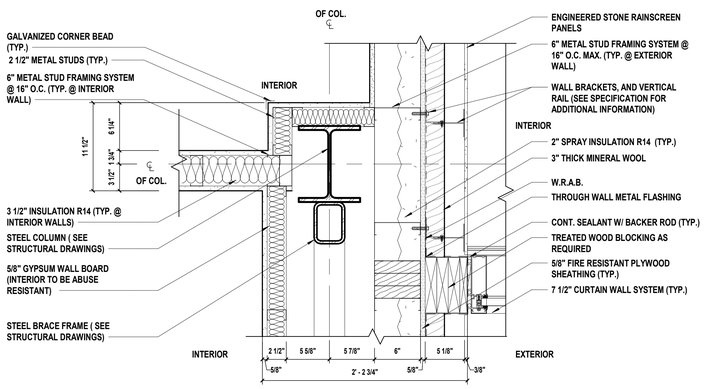

4 **Enlarged Plan Detail**
SCALE: 1 1/2" = 1'-0"

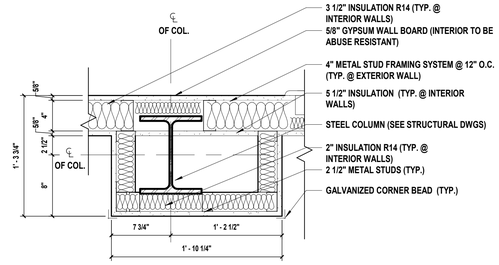

5 **Enlarged Plan Detail**
SCALE: 1 1/2" = 1'-0"

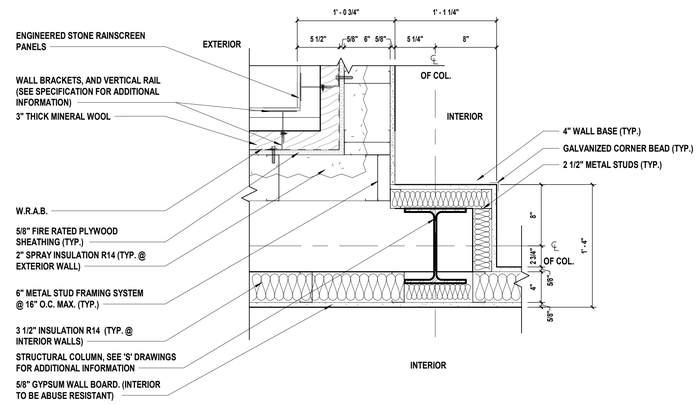

6 **Enlarged Plan Detail**
SCALE: 1 1/2" = 1'-0"

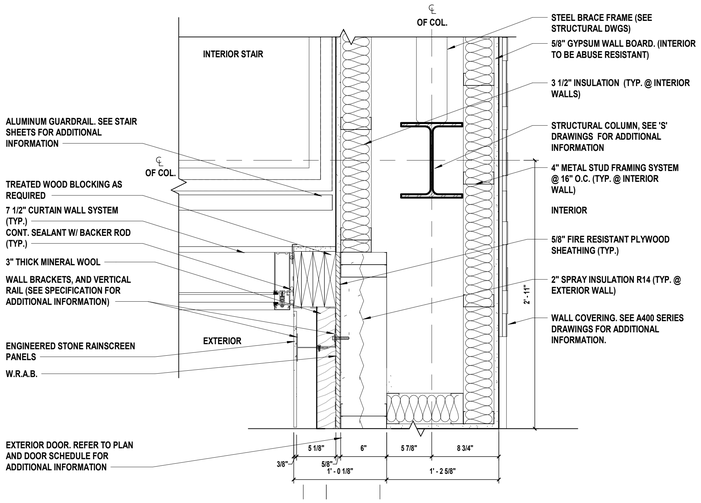

7 **Enlarged Plan Detail**
SCALE: 1 1/2" = 1'-0"

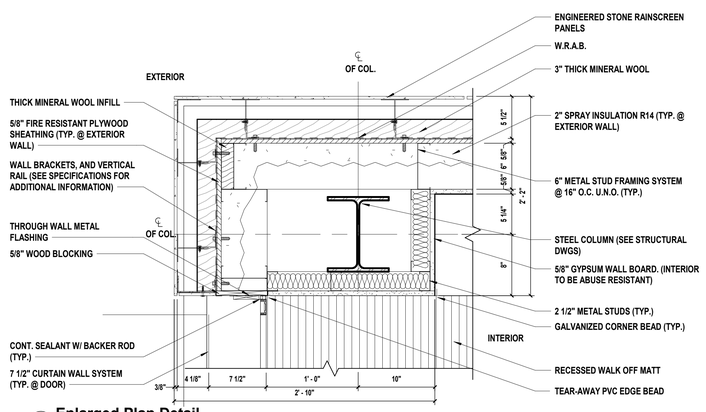

8 **Enlarged Plan Detail**
SCALE: 1 1/2" = 1'-0"

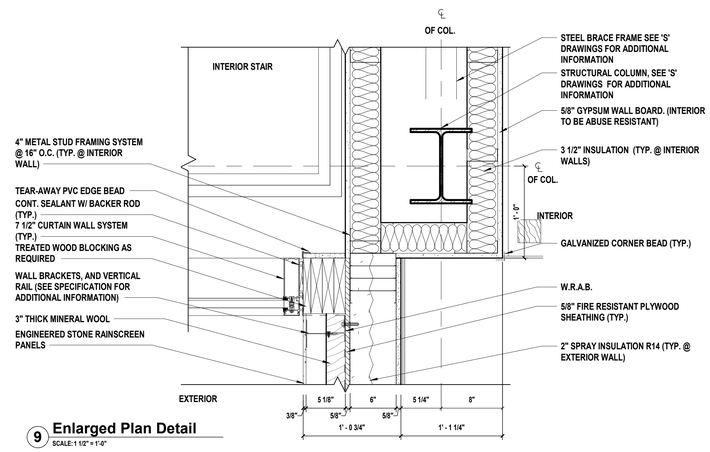

9 **Enlarged Plan Detail**
SCALE: 1 1/2" = 1'-0"

H 2 M architects + engineers

538 Broad Hollow Road, 4th Floor East
Melville, NY 11747
631.756.8000 • www.h2m.com
Architecture & Landscape Architecture: No Certificate Required
Engineering Certificate of Authorization No.: 0018178

CONSULTANTS:

MARK	DATE	DESCRIPTION

KEVIN M. MEDLER, R.A.
NY PROFESSIONAL ARCHITECT Lic. No. 036379

DESIGNED BY:	DRAWN BY:	CHECKED BY:	REVIEWED BY:
CWP	DOD/NPO	CWP	
PROJECT No.: WPSD 2203	DATE: MARCH 2025	SCALE: AS SHOWN	

CLIENT

WHITE PLAINS CITY SCHOOL DISTRICT

ADDITION AT WHITE PLAINS HIGH SCHOOL

550 NORTH STREET, WHITE PLAINS, NY 10605

66-22-00-01-0-016-030

CONTRACT

CONTRACT G
GENERAL CONSTRUCTION

STATUS

FINAL BID SET

SHEET TITLE

TYPICAL DETAILS

DRAWING No.

A 500.00

C:\Users\dsouza\Documents\WPSD2003_Central21_A_DDxSouzaD9T1B.rvt
3/6/2025 2:50:36 PM

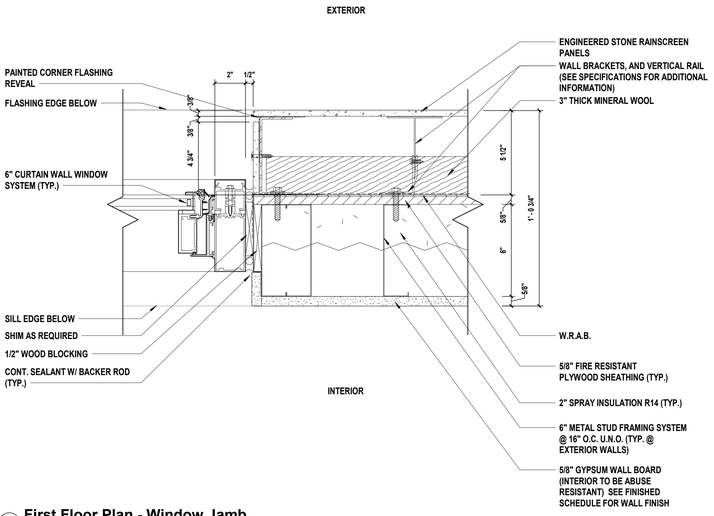

1 First Floor Plan - Window Jamb

SCALE: 3" = 1'-0"

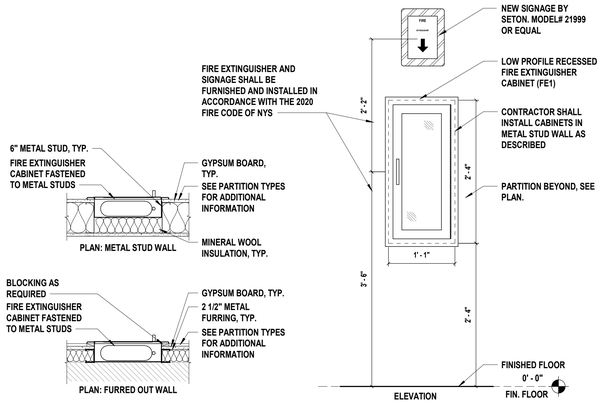

NOTE:
1. FIRE EXTINGUISHERS SHALL BE INSTALLED PER FCNYS 906 AND NFPA 10. MAXIMUM TRAVEL DISTANCE OF TRAVEL TO AN EXTINGUISHER SHALL BE 75 FEET, WITH A MINIMUM OF ONE FIRE EXTINGUISHER PER 11,250 SQUARE FEET OF FLOOR AREA.
2. REFER TO FLOOR PLANS FOR LOCATIONS.
3. PROVIDE AND INSTALL FIRE EXTINGUISHERS IN ACCORDANCE WITH ACCESSIBILITY GUIDELINES.

2 Recessed Fire Extinguisher Detail

SCALE: 1" = 1'-0"

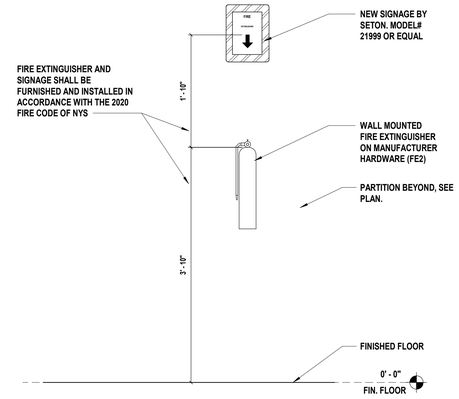

NOTE:
1. FIRE EXTINGUISHERS SHALL BE INSTALLED PER FCNYS 906 AND NFPA 10. MAXIMUM TRAVEL DISTANCE OF TRAVEL TO AN EXTINGUISHER SHALL BE 75 FEET, WITH A MINIMUM OF ONE FIRE EXTINGUISHER PER 11,250 SQUARE FEET OF FLOOR AREA.
2. REFER TO FLOOR PLANS FOR LOCATIONS.
3. PROVIDE AND INSTALL FIRE EXTINGUISHERS IN ACCORDANCE WITH ACCESSIBILITY GUIDELINES.

3 Wall Mounted Fire Extinguisher

SCALE: N.T.S

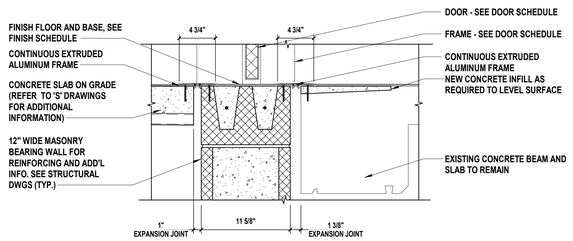

4 Floor Expansion Joint Detail

SCALE: 1 1/2" = 1'-0"

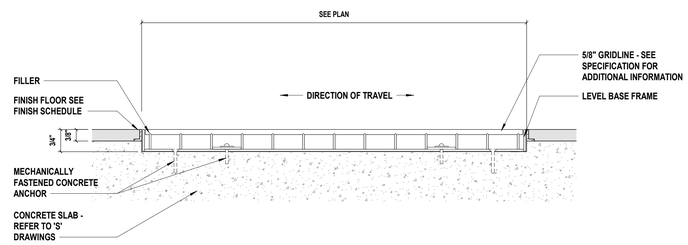

NOTE:
CONTRACTOR SHALL COORDINATE WALK OFF MAT LOCATIONS PRIOR TO SLAB POUR.

5 Entrance Mat Detail

SCALE: 6" = 1'-0"

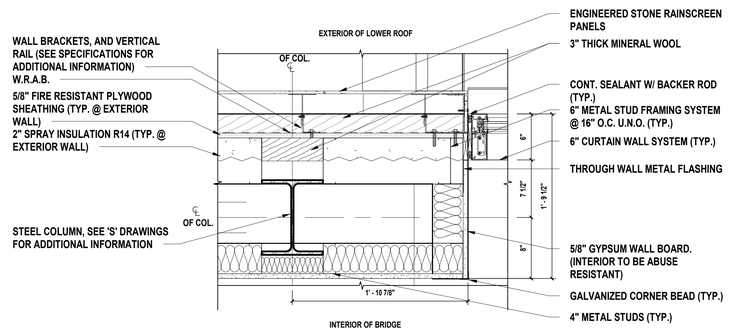

6 Enlarged Plan Detail

SCALE: 1 1/2" = 1'-0"

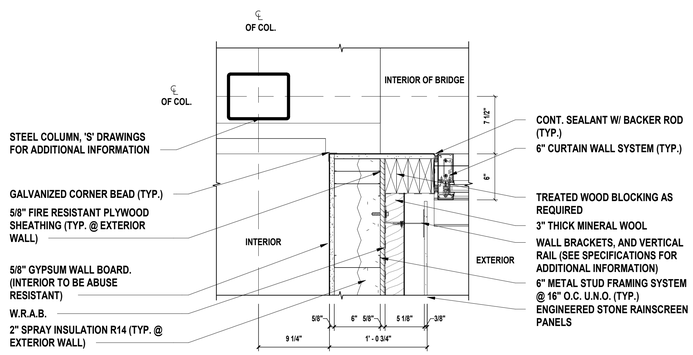

7 Enlarged Plan Detail

SCALE: 1 1/2" = 1'-0"

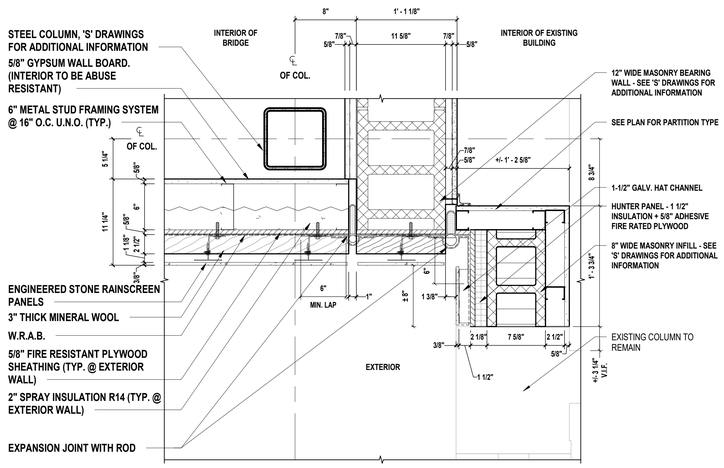

8 Enlarged Plan Detail

SCALE: 1 1/2" = 1'-0"

H2M architects + engineers
538 Broad Hollow Road, 4th Floor East
Melville, NY 11747
631.756.8000 • www.h2m.com
Architecture & Landscape Architecture: No Certificate Required
Engineering Certificate of Authorization No.: 0018178

CONSULTANTS:

MARK	DATE	DESCRIPTION

KEVIN M. MEDLER, R.A.
NY PROFESSIONAL ARCHITECT No. 036379

DESIGNED BY:	DRAWN BY:	CHECKED BY:	REVIEWED BY:
CWP	DOD/NPO	CWP/KMM	
PROJECT No: WPSD 2203	DATE: MARCH 2025	SCALE: AS SHOWN	

CLIENT

WHITE PLAINS CITY SCHOOL DISTRICT

ADDITION AT WHITE PLAINS HIGH SCHOOL

550 NORTH STREET, WHITE PLAINS, NY 10605

66-22-00-01-0-016-030

CONTRACT
CONTRACT G
GENERAL CONSTRUCTION

STATUS
FINAL BID SET

SHEET TITLE
TYPICAL DETAILS

DRAWING No.
A 501.00

C:\Users\ddesouza\Documents\WPSD2203_Central\21_A_DDeSousaDET18.rvt

3/6/2025 2:59:40 PM

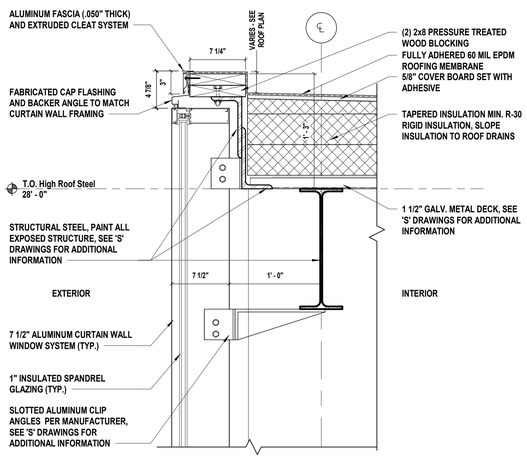

1 **Typical Parapet at 7 1/2" Curtain Wall Detail**
SCALE: 1 1/2" = 1'-0"

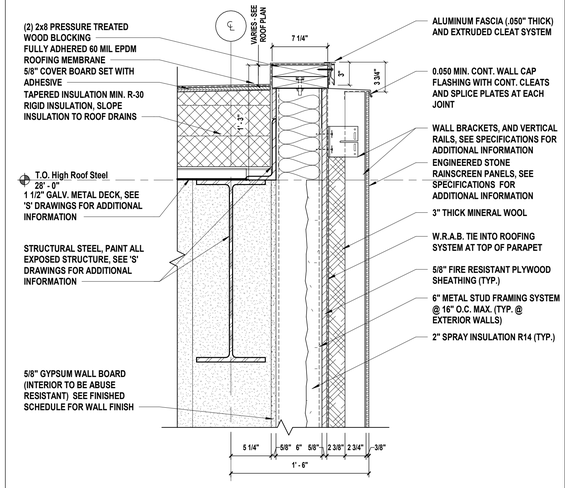

2 **Typical Parapet at Rainscreen Detail**
SCALE: 1 1/2" = 1'-0"

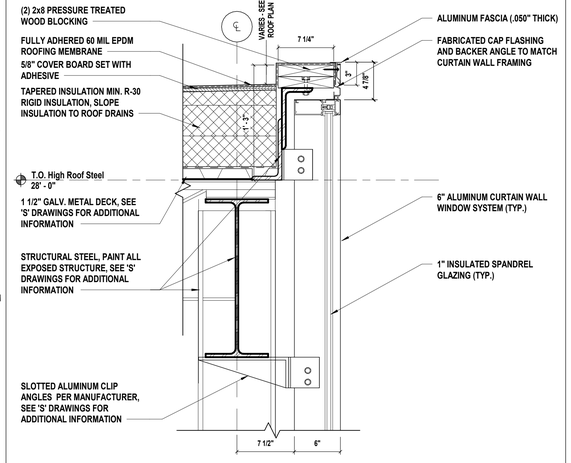

3 **Typical Parapet at 6" Curtain Wall Detail**
SCALE: 1 1/2" = 1'-0"

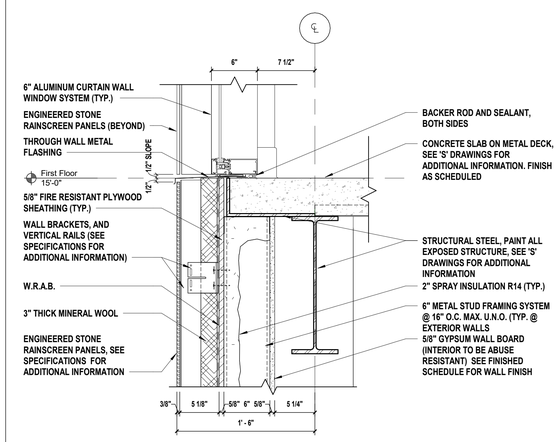

4 **Typical Wall Detail @ Curtain Wall Above**
SCALE: 1 1/2" = 1'-0"

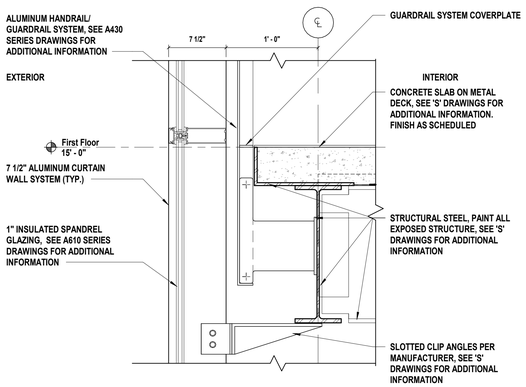

5 **Typical 7 1/2" Curtain Wall Connection Detail**
SCALE: 1 1/2" = 1'-0"

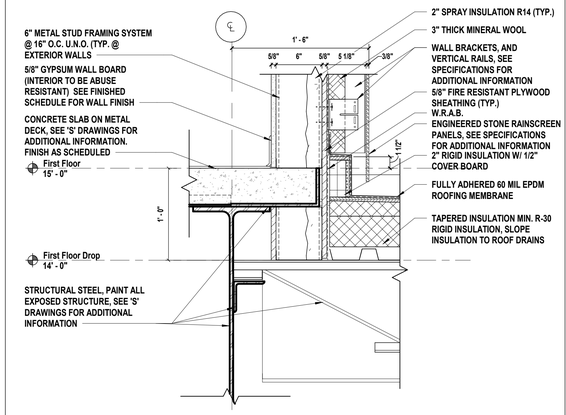

6 **Typical Drop Roof Slab Detail**
SCALE: 1 1/2" = 1'-0"

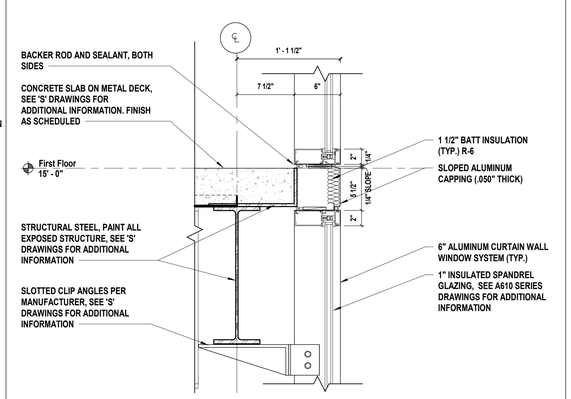

7 **Typical Curtain Wall Windows at Slab Detail**
SCALE: 1 1/2" = 1'-0"

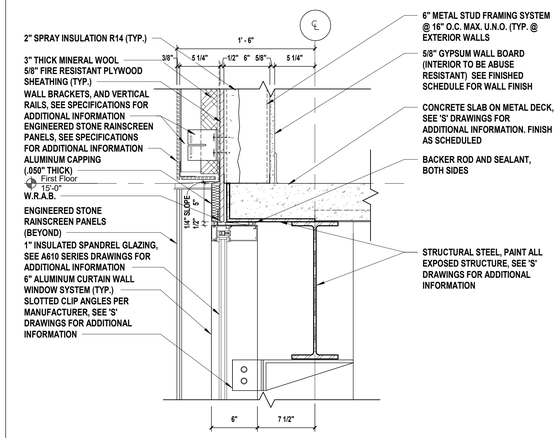

8 **Typical Wall Detail @ Curtain Wall Below**
SCALE: 1 1/2" = 1'-0"

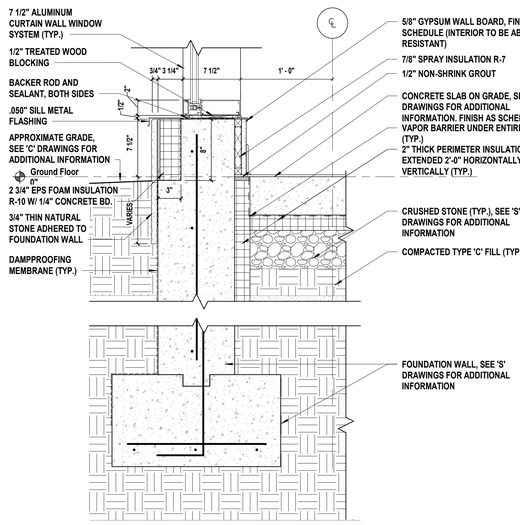

9 **Typical 7 1/2" Curtain Wall at Foundation Detail**
SCALE: 1 1/2" = 1'-0"

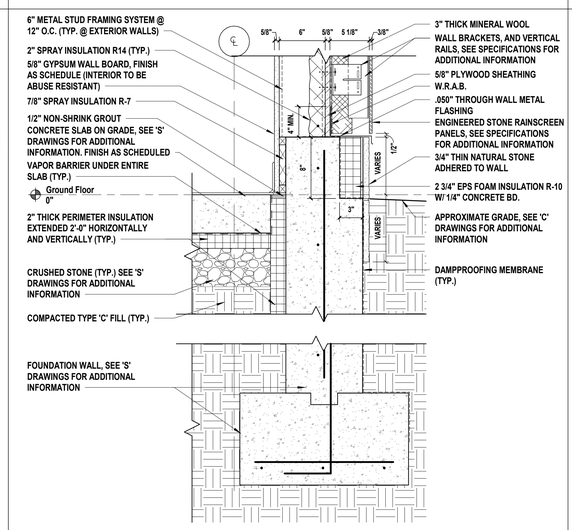

10 **Typical Rainscreen at Foundation Detail**
SCALE: 1 1/2" = 1'-0"

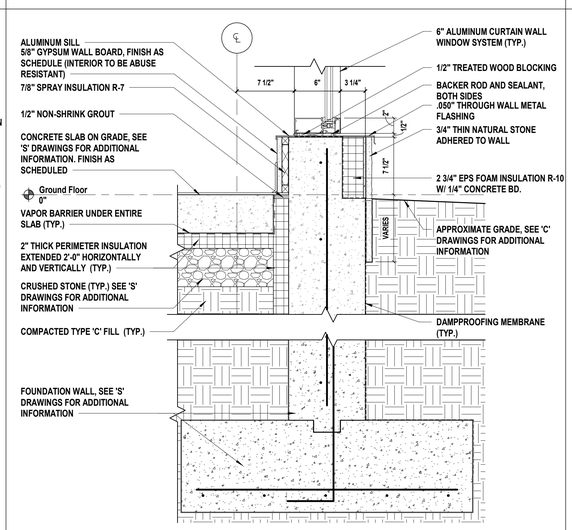

11 **Typical 6" Curtain Wall at Foundation Detail**
SCALE: 1 1/2" = 1'-0"

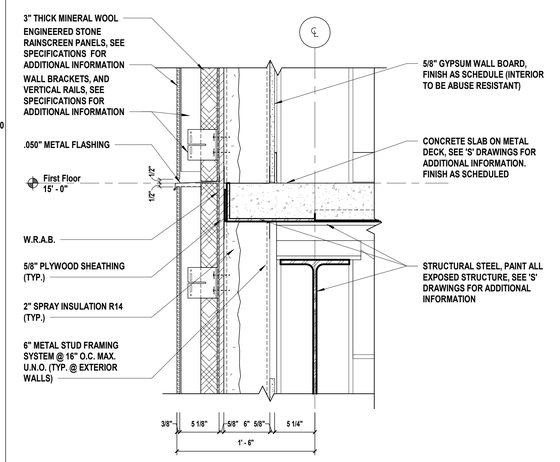

12 **Typical Rainscreen Wall Detail**
SCALE: 1 1/2" = 1'-0"

C:\Users\ddesouza\Documents\WPSD2203_Central21_A_DDnSouzaDBTLB.rvt

3/6/2025 2:50:45 PM

H 2 M architects + engineers

538 Broad Hollow Road, 4th Floor East
Melville, NY 11747
631.756.8000 • www.h2m.com
Architecture & Landscape Architecture: No Certificate Required
Engineering Certificate of Authorization No.: 0018178

CONSULTANTS:

MARK	DATE	DESCRIPTION
1	08-23-2024	SED ADDENDUM 1

REGISTERED ARCHITECT KEVIN MICHAEL MEDLER 038379 STATE OF NEW YORK

KEVIN M. MEDLER, R.A.
NY PROFESSIONAL ARCHITECT No. 038379
The reproduction of this document shall not be a substitute for the original signed and sealed document.

DESIGNED BY:	DRAWN BY:	CHECKED BY:	REVIEWED BY:
CWP	DOD/NPO	Checker	

PROJECT No:	DATE:	SCALE:
WPSD 2203	MARCH 2025	AS SHOWN

CLIENT
WHITE PLAINS CITY SCHOOL DISTRICT

ADDITION AT WHITE PLAINS HIGH SCHOOL

550 NORTH STREET, WHITE PLAINS, NY 10605

66-22-00-01-0-016-030

CONTRACT
CONTRACT G
GENERAL CONSTRUCTION

STATUS
FINAL BID SET

SHEET TITLE
WALL DETAILS

DRAWING No.
A 502.00

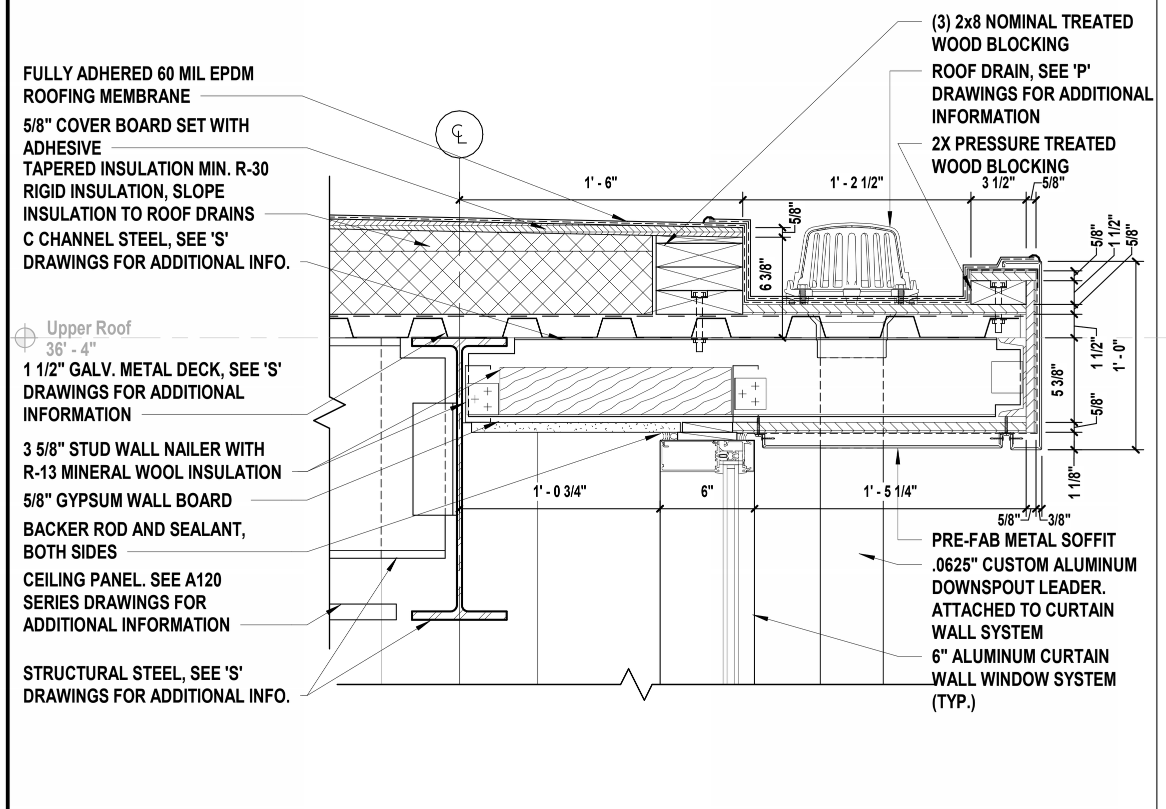

1 Typical Clerestory Detail A
SCALE: 1 1/2" = 1'-0"

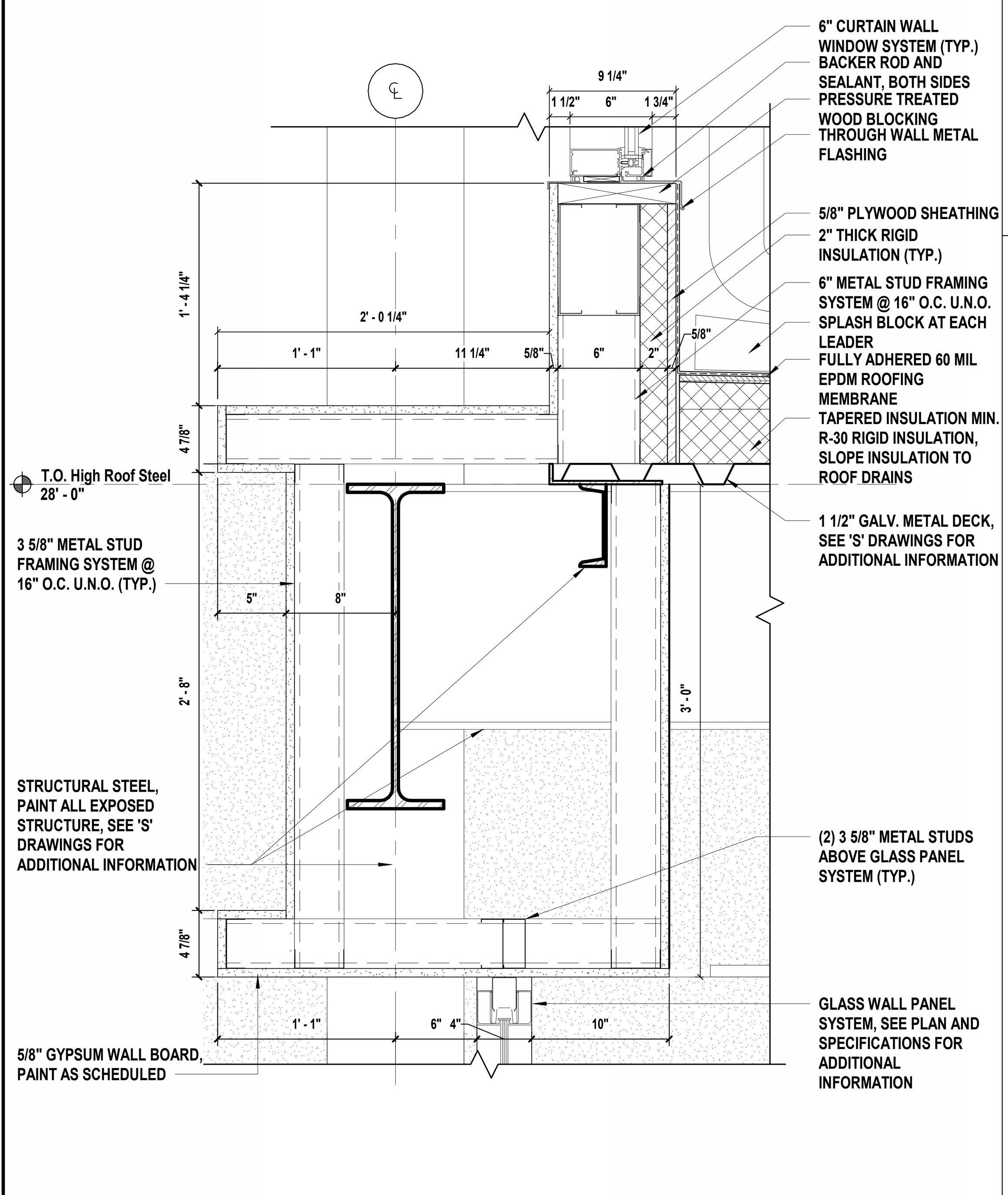

2 Typical Clerestory Detail B
SCALE: 1 1/2" = 1'-0"

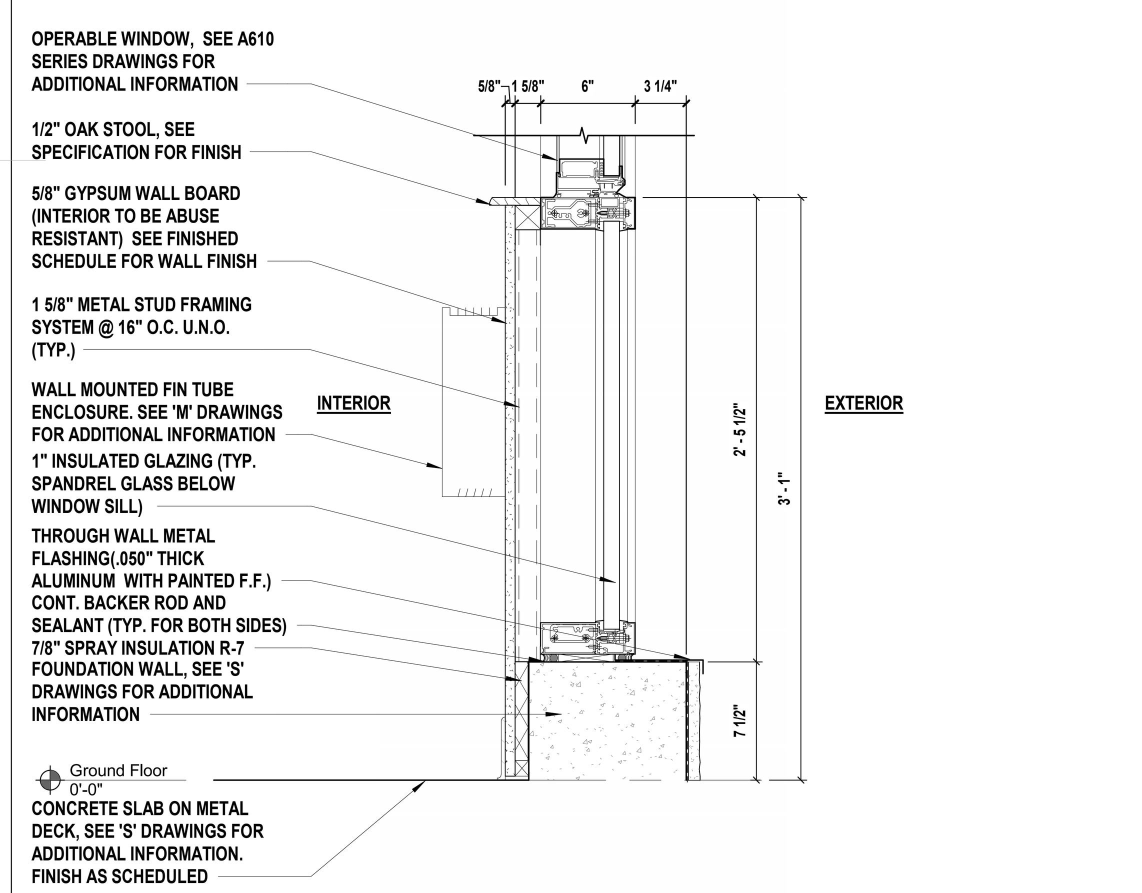

3 Typical Exterior Window Furring Detail
SCALE: 1 1/2" = 1'-0"

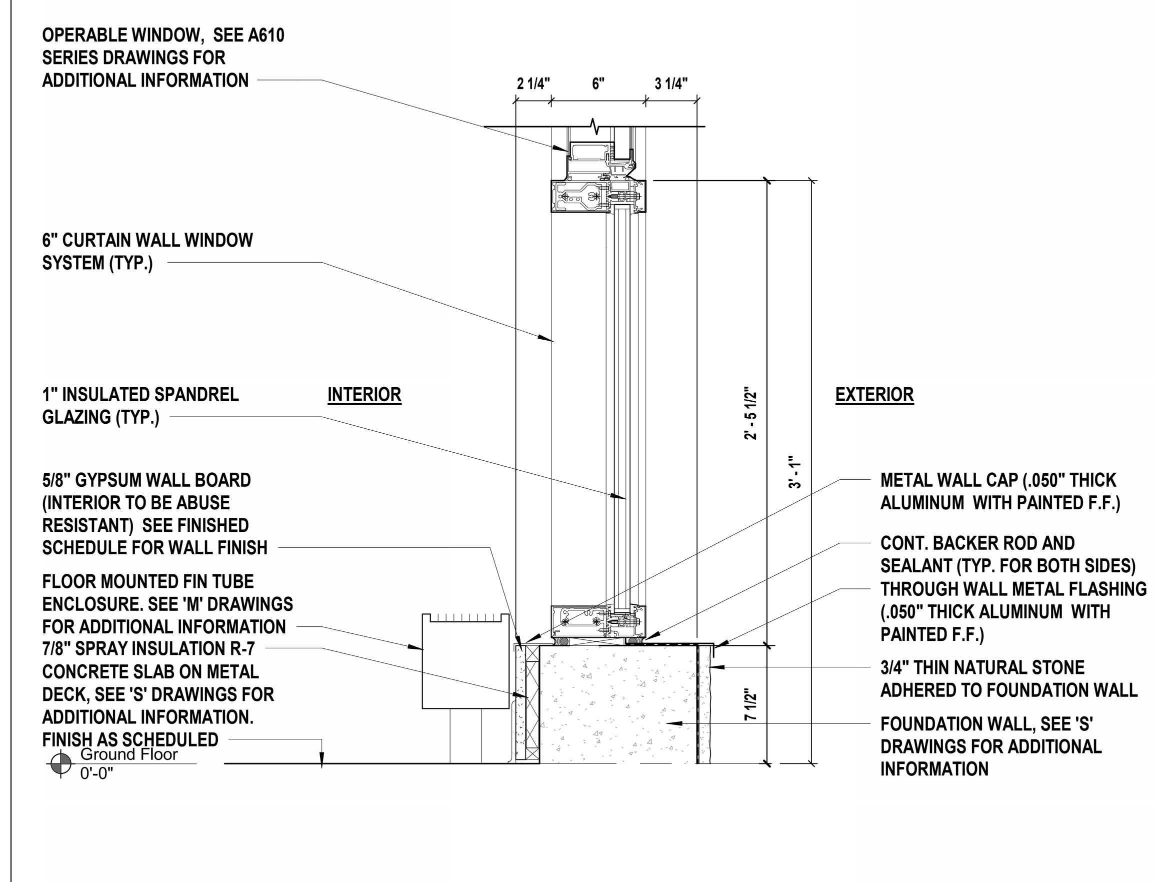

4 Typical Exterior Window Furring Detail At Curtain Wall
SCALE: 1 1/2" = 1'-0"

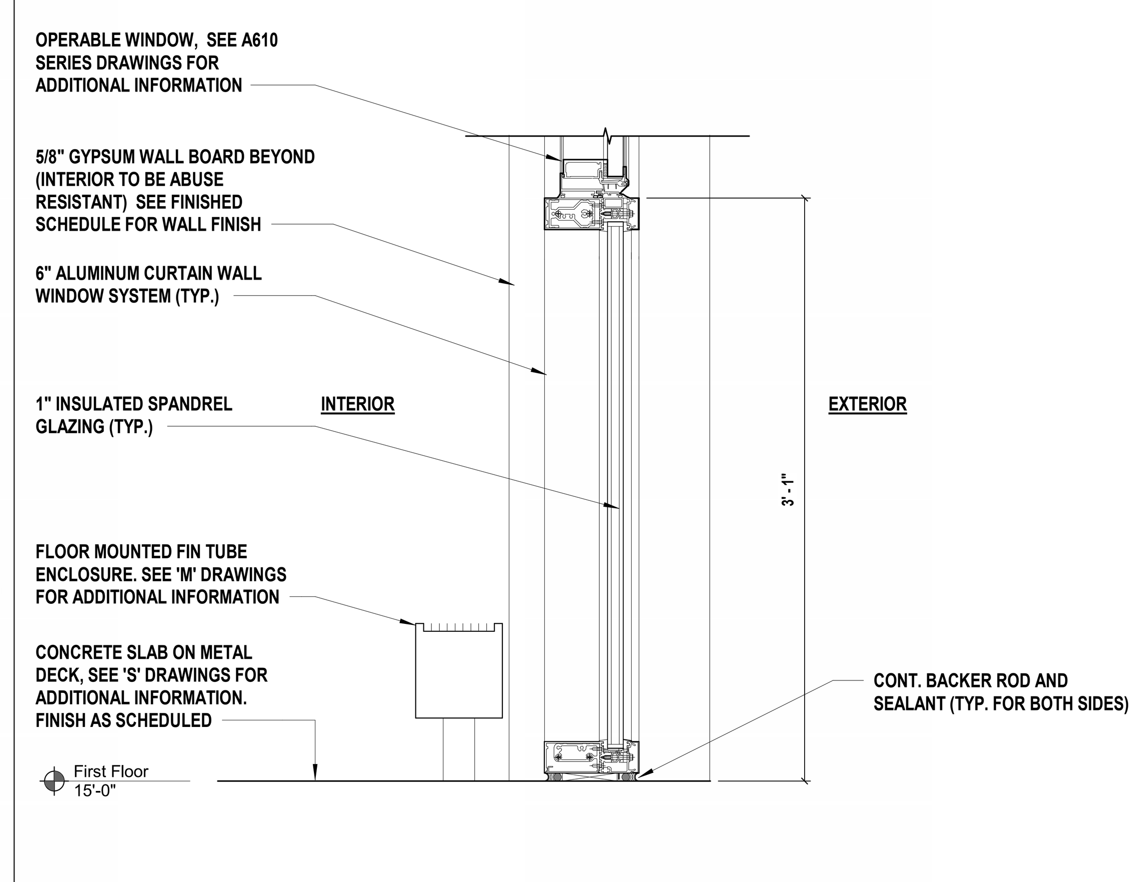

5 Typical Exterior Window Detail
SCALE: 1 1/2" = 1'-0"

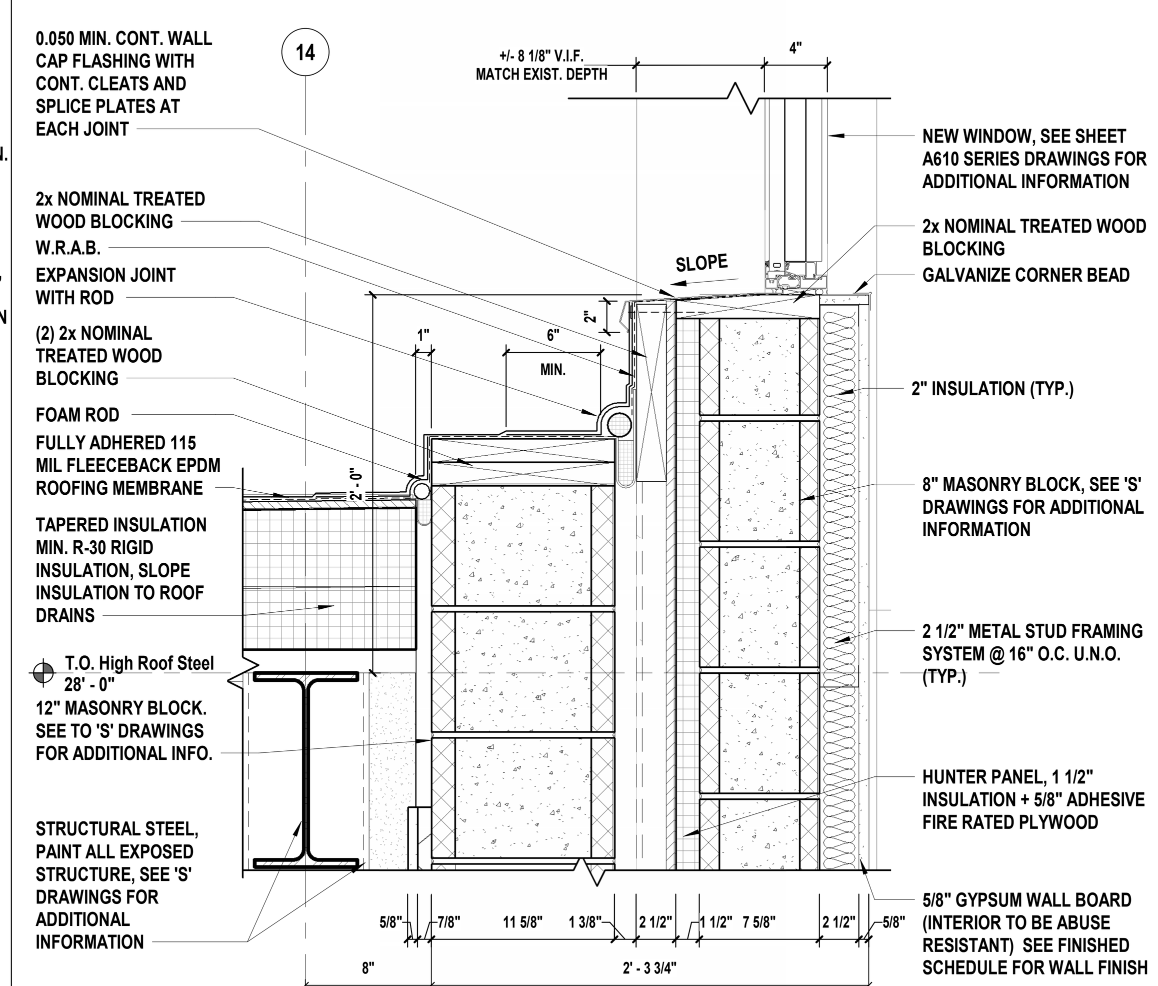

6 Typical wall Detail @ Bridge Fire Wall
SCALE: 1 1/2" = 1'-0"

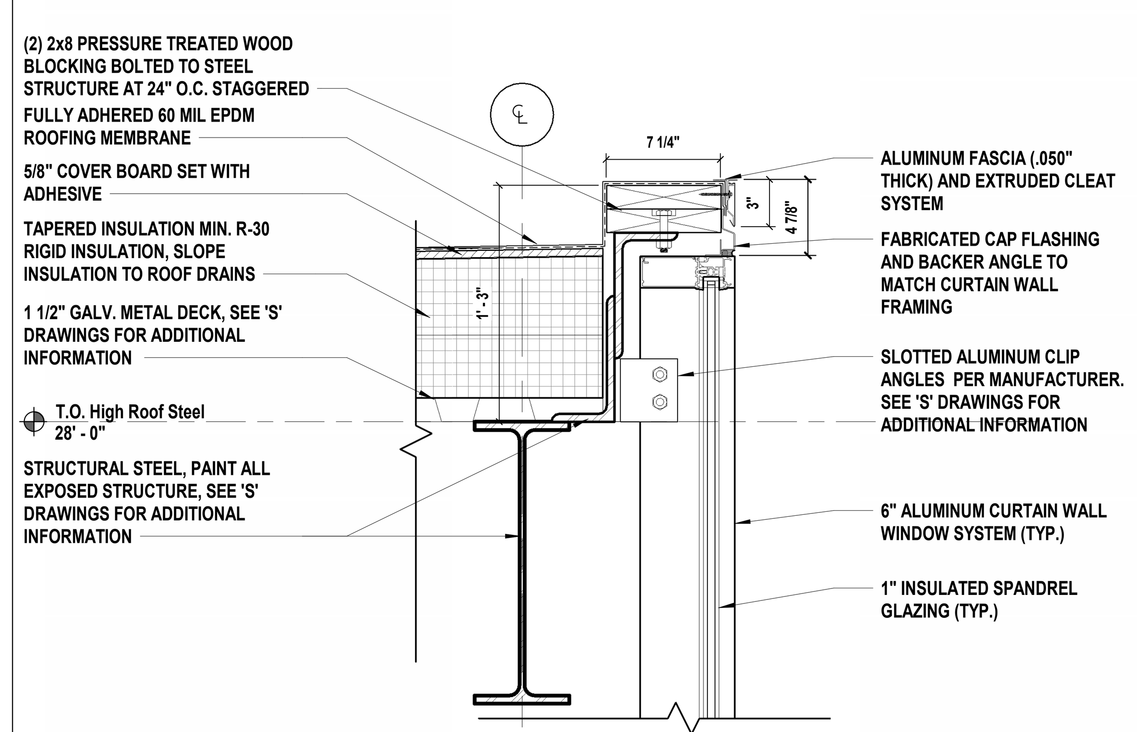

8 Typical Wall Detail @ Bridge Parapet
SCALE: 1 1/2" = 1'-0"

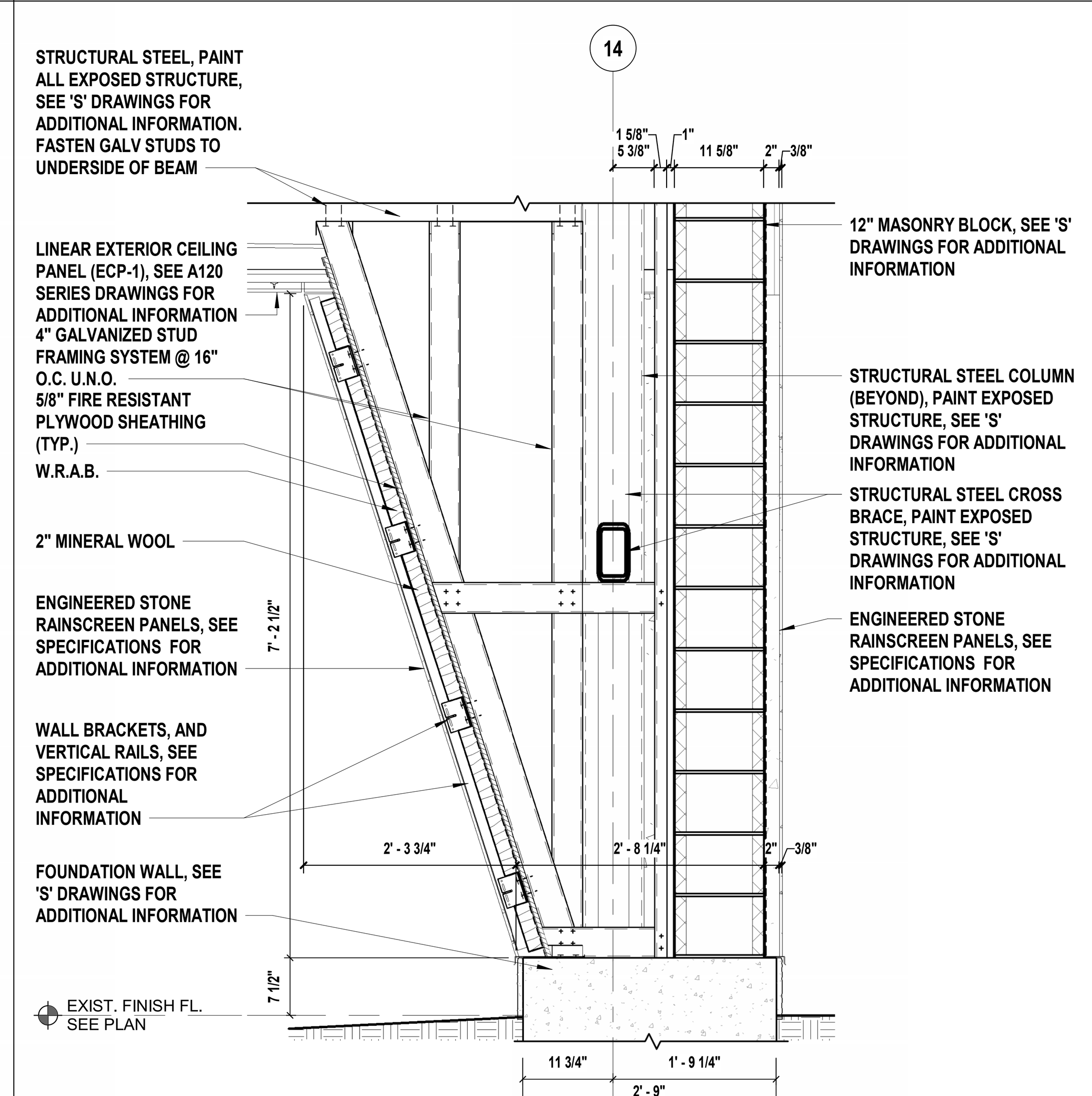

10 Typical Wall Detail @ Bridge Base
SCALE: 3/4" = 1'-0"

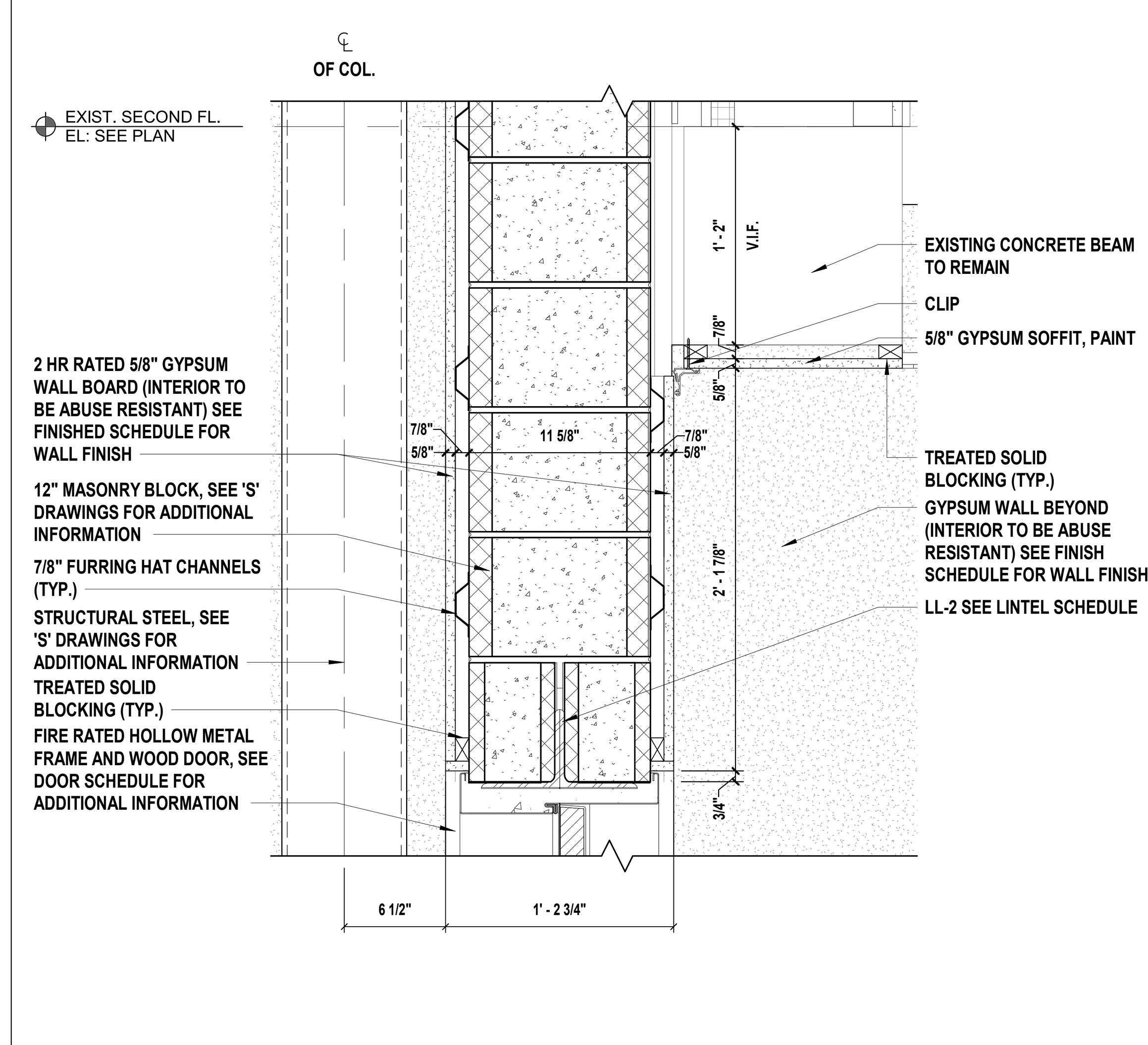

7 Typical Wall Detail @ Bridge Door
SCALE: 1 1/2" = 1'-0"

NOTE: 2HR RATED WALL ASSEMBLY U910

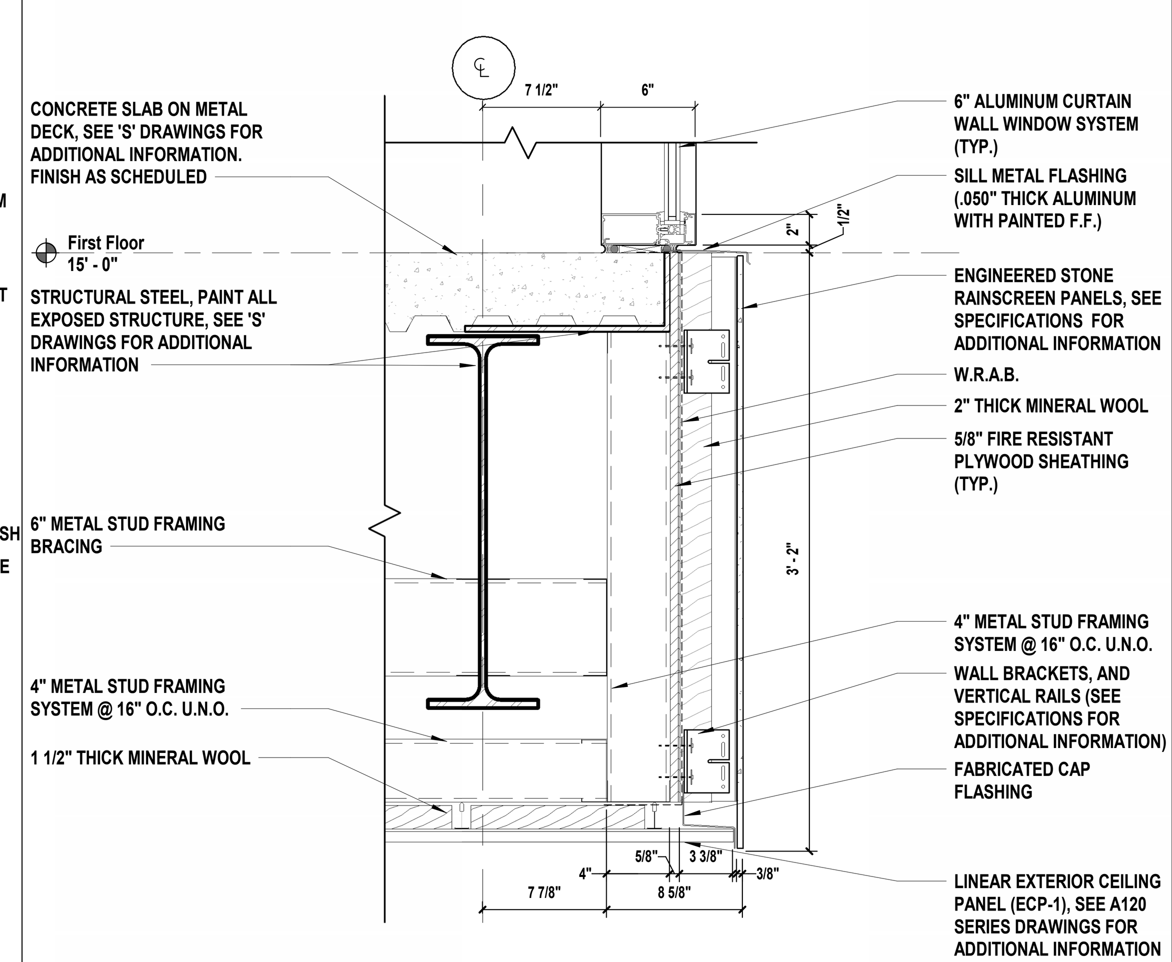

9 Typical Wall Detail @ Bridge
SCALE: 1 1/2" = 1'-0"

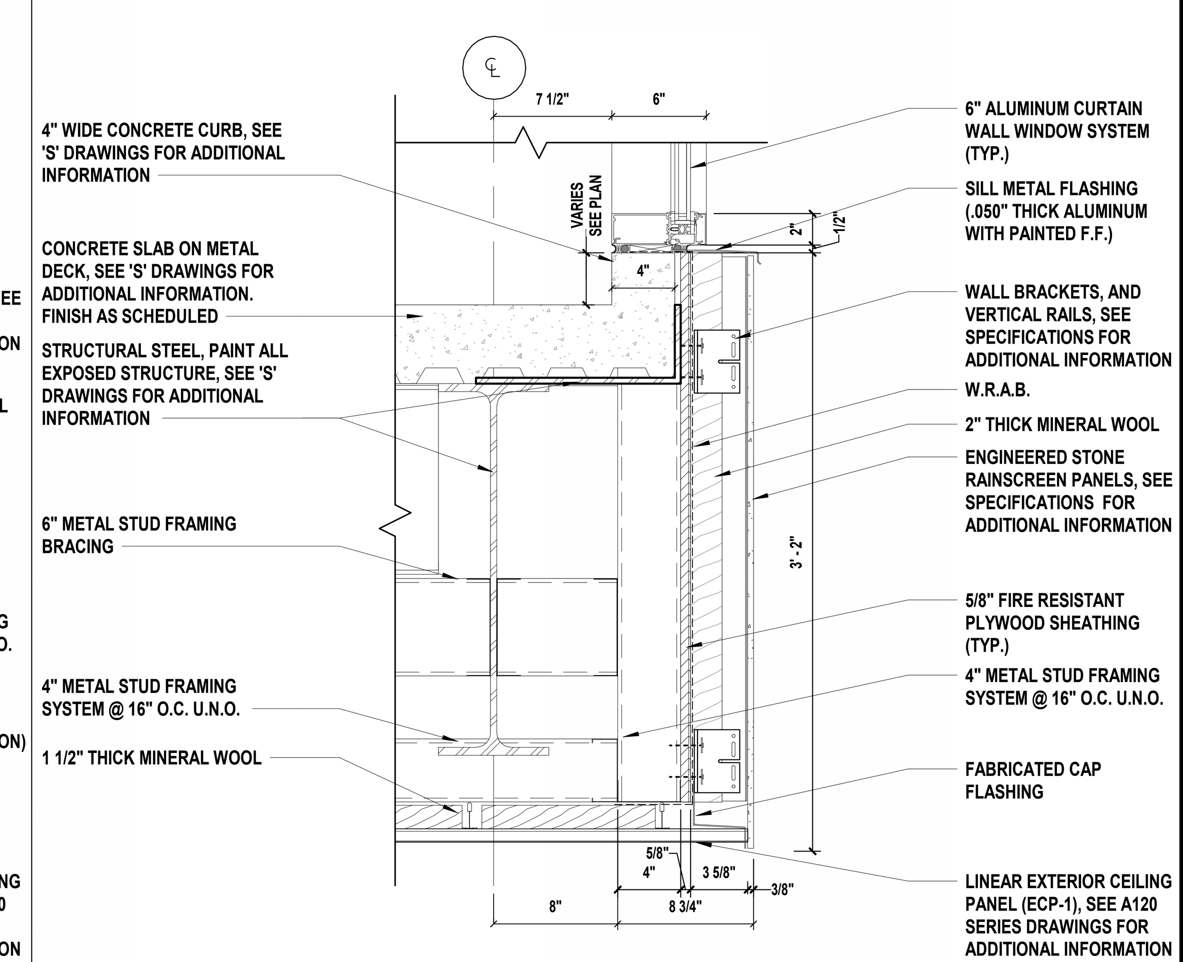

11 Typical Wall Detail @ Bridge
SCALE: 1 1/2" = 1'-0"

H2M architects + engineers
538 Broad Hollow Road, 4th Floor East
Melville, NY 11747
631.756.8000 • www.h2m.com
Architecture & Landscape Architecture: No Certificate Required
Engineering Certificate of Authorization No.: 0018178

CONSULTANTS:

MARK	DATE	DESCRIPTION

REGISTERED ARCHITECT KEVIN MICHAEL MEDLER 038379 STATE OF NEW YORK
07/31/2024
Exp. Date
KEVIN M. MEDLER, R.A.
NY PROFESSIONAL ARCHITECT Lic. No. 038379
"ALTERATION OF THIS DOCUMENT EXCEPT BY A LICENSED PROFESSIONAL IS ILLEGAL"

DESIGNED BY:	DRAWN BY:	CHECKED BY:	REVIEWED BY:
CWP	DOD/NPO	CWP/KMM	

PROJECT No:	DATE:	SCALE:
WPSD 2203	MARCH 2025	AS SHOWN

CLIENT

WHITE PLAINS CITY SCHOOL DISTRICT

ADDITION AT WHITE PLAINS HIGH SCHOOL

550 NORTH STREET, WHITE PLAINS, NY 10605

66-22-00-01-0-016-030

CONTRACT
CONTRACT G
GENERAL CONSTRUCTION

STATUS
FINAL BID SET

SHEET TITLE
WALL DETAILS

DRAWING No.
A 503.00

C:\Users\ddesouza\Documents\WPSD2203_Central21_A_DDeSouzaD8TU8.rvt
3/20/2025 3:14:31 PM

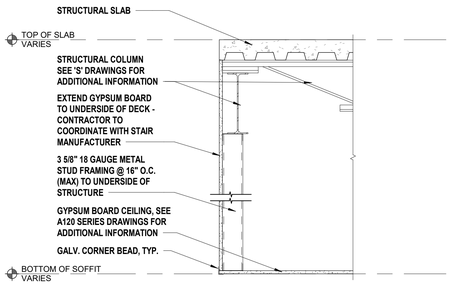

1 **Typical Soffit Ceiling Detail**
SCALE: 1" = 1'-0"

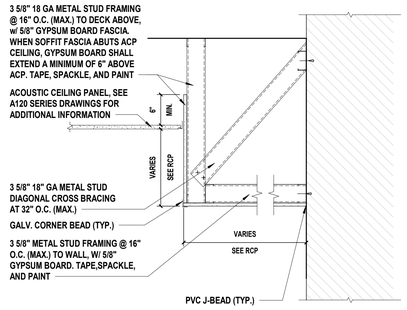

2 **Typical Soffit Ceiling Detail**
SCALE: 1" = 1'-0"

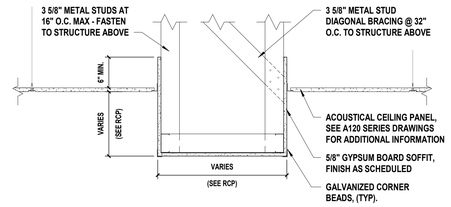

NOTE: AT EXPOSED CEILING LOCATIONS, RUN GYPSUM BOARD UP TO UNDERSIDE OF STRUCTURE

3 **Typical Soffit / Header Detail**
SCALE: 1" = 1'-0"

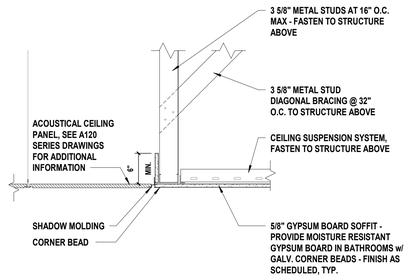

4 **Typical Soffit Ceiling Detail**
SCALE: 1" = 1'-0"

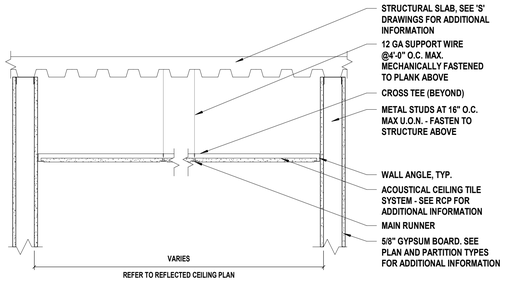

5 **Acoustical Ceiling Tile (ACT) Detail**
SCALE: 1" = 1'-0"

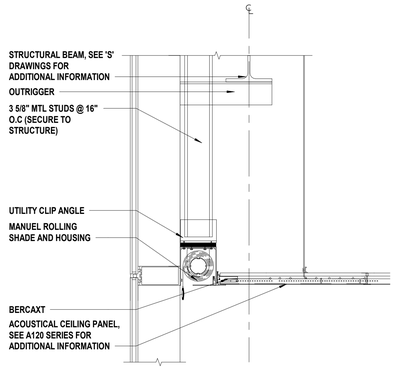

6 **Roller Shade Detail-ACT**
SCALE: 1 1/2" = 1'-0"

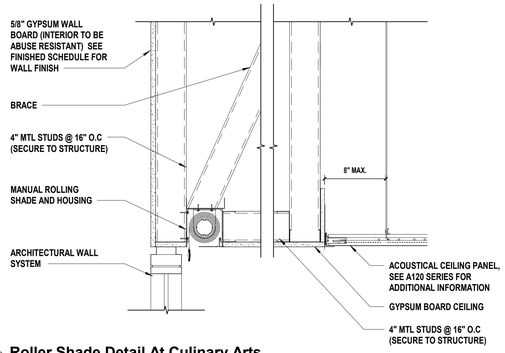

7 **Roller Shade Detail At Culinary Arts**
SCALE: 1 1/2" = 1'-0"

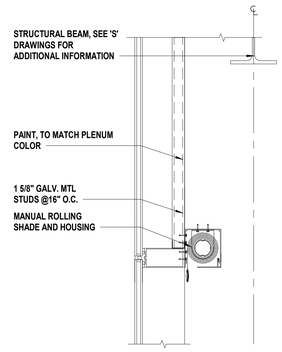

8 **Roller Shade Detail- Exposed Ceiling**
SCALE: 1 1/2" = 1'-0"

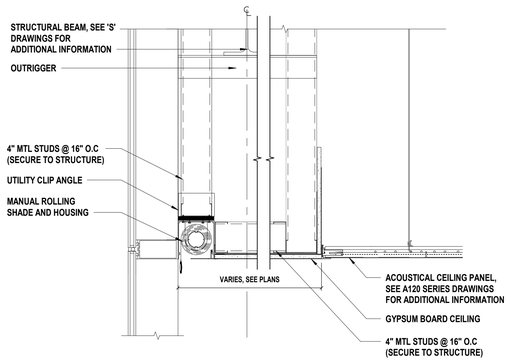

9 **Roller Shade Detail- Soffit**
SCALE: 1 1/2" = 1'-0"

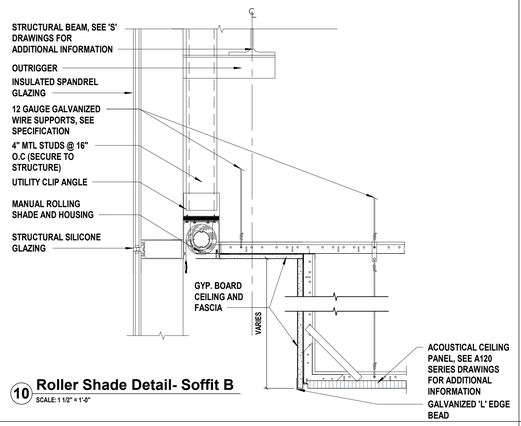

10 **Roller Shade Detail- Soffit B**
SCALE: 1 1/2" = 1'-0"

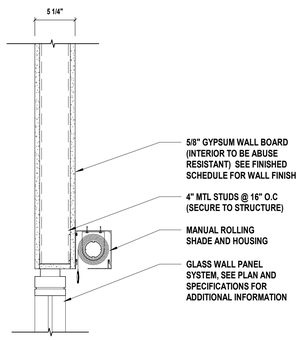

11 **Roller Shade Detail At Art Gallery**
SCALE: 1 1/2" = 1'-0"

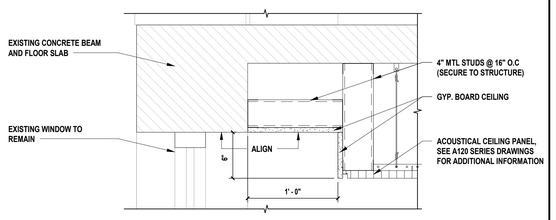

12 **Soffit Detail at Existing Window**
SCALE: 1 1/2" = 1'-0"

H2M architects + engineers
538 Broad Hollow Road, 4th Floor East
Melville, NY 11747
631.756.8000 • www.h2m.com
Architecture & Landscape Architecture: No Certificate Required
Engineering Certificate of Authorization No.: 0018178

CONSULTANTS:

MARK	DATE	DESCRIPTION

KEVIN M. MEDLER, R.A.
NY PROFESSIONAL ARCHITECT Lic. No. 036379

DESIGNED BY:	DRAWN BY:	CHECKED BY:	REVIEWED BY:
CWP	DOD/NPO	Checker	
PROJECT No: WPSD 2203	DATE: MARCH 2025	SCALE: AS SHOWN	

CLIENT
WHITE PLAINS CITY SCHOOL DISTRICT

ADDITION AT WHITE PLAINS HIGH SCHOOL

550 NORTH STREET, WHITE PLAINS, NY 10605

66-22-00-01-0-016-030

CONTRACT
CONTRACT G
GENERAL CONSTRUCTION

STATUS
FINAL BID SET

SHEET TITLE
TYPICAL CEILING DETAILS

DRAWING No.
A 530.00

C:\Users\ddesouza\Documents\WPSD2203_Central\21_A_DDeSouzaDRT18.rvt
3/6/2025 2:59:55 PM

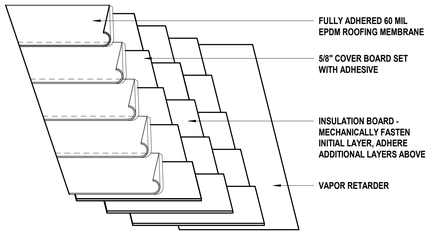

NOTE: OVERALL ROOFING SYSTEM SHALL PROVIDE A MINIMUM R-VALUE OF R-30 THROUGHOUT ALL ROOF AREAS

1 Typical EPDM Detail
SCALE: 1 1/2" = 1'-0"

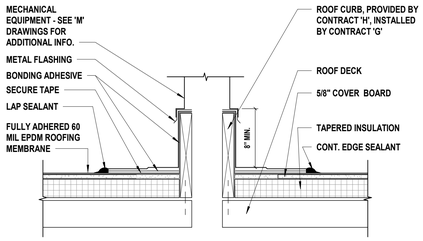

2 Typical Roof Curb Detail (EPDM Roof)
SCALE: 1 1/2" = 1'-0"

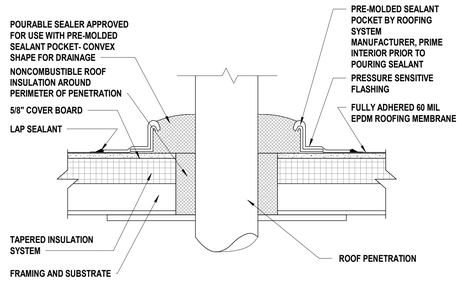

3 Typical Sealant Pitch Pocket Detail (EPDM Roof)
SCALE: 1 1/2" = 1'-0"

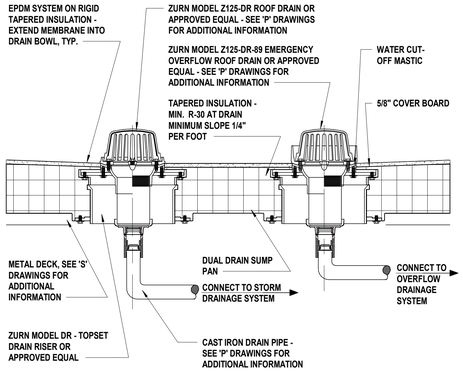

5 Typical Roof Drain Detail (EPDM Roof)
SCALE: 1 1/2" = 1'-0"

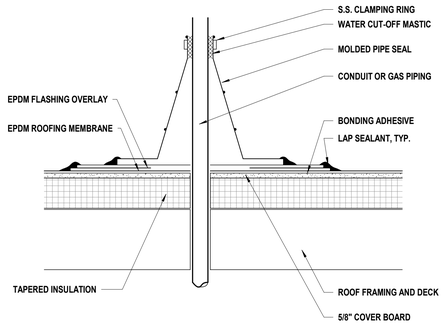

6 Typical Pipe Penetration Detail
SCALE: 1 1/2" = 1'-0"

NOTE:
THE CONTRACTORS RESPONSIBLE FOR THE WIRING OR PIPING SHALL INCLUDE THESE SUPPORTS FOR THEIR RESPECTIVE CONTRACTS

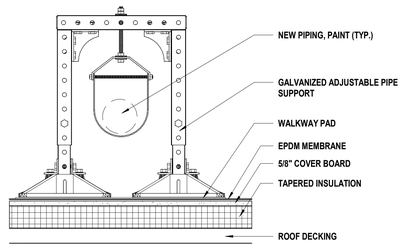

TYPICAL FOR PIPES/CONDUIT GREATER THAN 2 1/2" DIAMETER

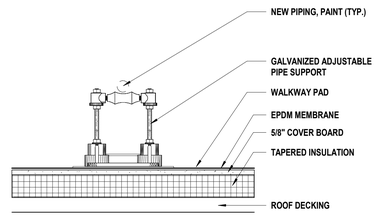

TYPICAL FOR PIPES/CONDUIT LESS THAN 2 1/2" DIAMETER

7 Typical Pipe Support Detail
SCALE: 6" = 1'-0"

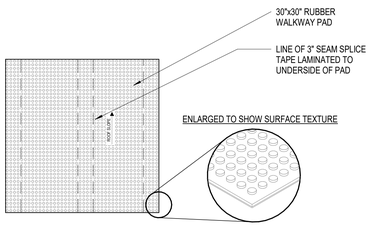

NOTES:

1. SEE PLANS FOR LOCATIONS AND QUANTITIES OF WALKWAY PADS.

8 Typical Walkway Pad
SCALE: 12" = 1'-0"

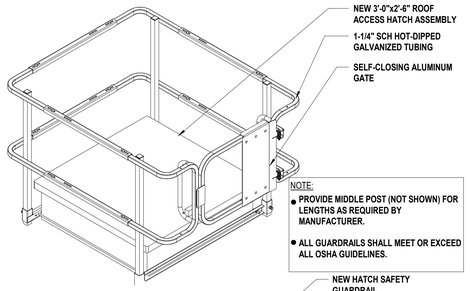

NOTE:
- PROVIDE MIDDLE POST (NOT SHOWN) FOR LENGTHS AS REQUIRED BY MANUFACTURER.
- ALL GUARDRAILS SHALL MEET OR EXCEED ALL OSHA GUIDELINES.

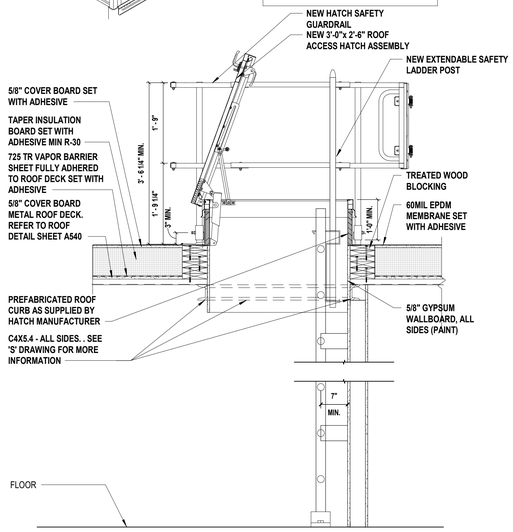

9 Roof Hatch Detail
SCALE: 3/4" = 1'-0"

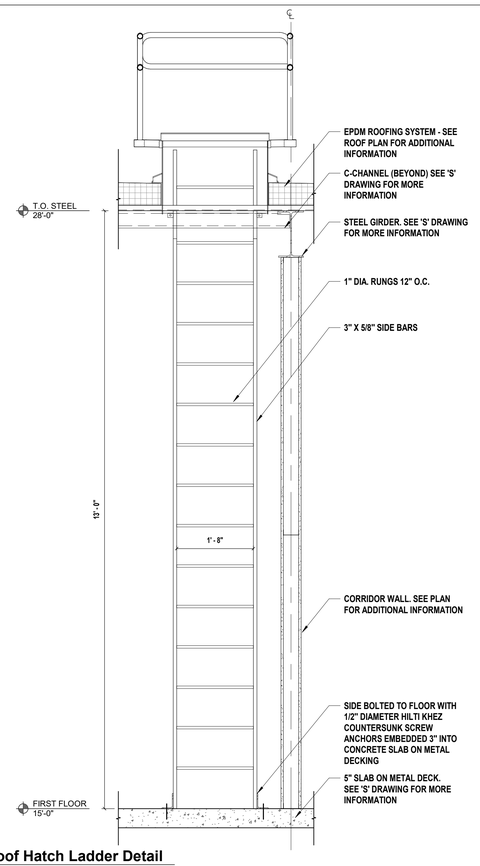

10 Roof Hatch Ladder Detail
SCALE: 3/4" = 1'-0"

H2M architects + engineers
538 Broad Hollow Road, 4th Floor East
Melville, NY 11747
631.756.8000 • www.h2m.com
Architecture & Landscape Architecture: No Certificate Required
Engineering Certificate of Authorization No.: 0018178

CONSULTANTS:

MARK	DATE	DESCRIPTION

KEVIN M. MEDLER, R.A.
NY PROFESSIONAL ARCHITECT Lic. No. 036379

DESIGNED BY:	DRAWN BY:	CHECKED BY:	REVIEWED BY:
CWP	DOD/NPO	Checker	-
PROJECT No: WPSD 2203	DATE: MARCH 2025	SCALE: AS SHOWN	

CLIENT
WHITE PLAINS CITY SCHOOL DISTRICT

ADDITION AT WHITE PLAINS HIGH SCHOOL

550 NORTH STREET, WHITE PLAINS, NY 10605

66-22-00-01-0-016-030

CONTRACT
CONTRACT G GENERAL CONSTRUCTION

STATUS
FINAL BID SET

SHEET TITLE
ROOF DETAILS

DRAWING No.
A 540.00

C:\Users\kbeaucar\Documents\WPSD2203_Central\21_A_ODs\Scud\DRT18.rvt
3/6/2025 2:50:58 PM

SPECIALTY EQUIPMENT SCHEDULE

Keynote	Description	Manufacturer	MODEL	WIDTH	DEPTH	HEIGHT	MATERIAL	COUNTER TOP	LOCKING HARDWARE	BACK SPLASH	SINK	Comments
E01	ELECTRIC FREESTANDING RANGE	Kenmore	JB645RKSS	2' - 5 7/8"	2' - 1 3/8"	3' - 11"	FF					STAINLESS STEEL
E02	24" BUILT-IN DISHWASHER	Kenmore	GDP670SYVFS	1' - 11 3/4"	2' - 0"	2' - 9 3/8"	FF					STAINLESS STEEL
E03	SIDE-BY-SIDE REFRIGERATOR	Kenmore	GSS25GYPFS	2' - 11 3/4"	2' - 8 3/4"	5' - 9 7/8"	FF					STAINLESS STEEL
E04	FRONT LOAD WASHER	Kenmore	GFP1528SNWW	2' - 4"	2' - 8"	3' - 3 3/4"	FF					WHITE
E05	FRONT LOAD ELECTRIC DRYER	Kenmore	GFD55ESSNWW	2' - 4"	2' - 8"	3' - 3 3/4"	FF					WHITE
E06	FRONT LOAD ELECTRIC DRYER	Kenmore	GTD33EASKWW	2' - 3"	2' - 5 1/2"	3' - 8"	FF					WHITE
E07	TOP LOAD WASHER	Kenmore	GTW465ASNWW	2' - 3"	2' - 3"	3' - 8"	FF					WHITE
E08	SCULLERY SINK WITH DRAINING BOARDS	ELKAY	LK50-13038	14' - 0"	2' - 6"	2' - 10"	FF			8 1/2"		STAINLESS STEEL
E09	SCULLERY SINK	ELKAY	LK50-13037	8' - 11"	2' - 6"	2' - 10"	FF			8 1/2"		STAINLESS STEEL
E10	SCULLERY SINK NON ADA	ELKAY	LK50-13037	8' - 11"	2' - 6"	3' - 0"	FF			8 1/2"		STAINLESS STEEL
E11	BENQ DISPLAY	BenQ	RP8603	7' - 1"	0' - 9 4/5"	4' 4 4/5"						
E12	160" DISPLAY WALL		LDM163-181	11' - 10 1/2"	0' - 1 1/2"	7' - 0"						
E13	CERAMIC POTTERY WHEEL		CXC	1' - 9"	2' - 4"	1' - 6"	FF					
E14	KD WALL SHELF	Advance Tabco	AWS-KD-72	6' - 0"	0' - 11 1/8"	0' - 8 17/32"	FF					STAINLESS STEEL
E15	BORDER FRAME GLASS WHITE BOARD	Ghent a GMi company	BDR1	48 3/8"	0' - 0 9/16"	96 3/8"	GLASS/ALUM					
E16	KD WALL SHELF	Advance Tabco	AWS-KD-48	4' - 0"	0' - 11 1/8"	0' - 8 17/32"	FF					STAINLESS STEEL
E17	BORDER FRAME GLASS WHITE BOARD	Ghent a GMi company	BDR1	48 3/8"	0' - 0 9/16"	36 3/8"	GLASS/ALUM					
E18	BORDER FRAME GLASS WHITE BOARD	Ghent a GMi company	BDR1	60 3/8"	0' - 0 9/16"	48 3/8"	GLASS/ALUM					
E19	BORDER FRAME TACKBOARD	Ghent a GMi company	BDR4	18 3/8"	0' - 0 9/16"	48 3/8"	TACKABLE/ALUM					
E20	BORDER FRAME GLASS WHITE BOARD	Ghent a GMi company	BDR1	96 3/8"	0' - 0 9/16"	48 3/8"	GLASS/ALUM					
E21	BORDER FRAME TACKBOARD	Ghent a GMi company	BDR4	36 3/8"	0' - 0 9/16"	48 3/8"	TACKABLE/ALUM					
E22	BUILDING DIRECTORY											

CASEWORK SCHEDULE

Keynote	Description	Model	Manufacturer	WIDTH	DEPTH	HEIGHT	MATERIAL	COUNTER TOP	LOCKING HARDWARE	BACK SPLASH	SINK	REMARKS
C1	DOUBLE DOOR BASE CABINETS WITH TWO DRAWERS	B3122-303523/P	Casework USA by WB Mfg	2' - 6"	2' - 0"	2' - 8 1/2"	P. LAM.	SS	X	X		PROVIDE DRAWER LOCKS
C2	DOUBLE DOOR TOP CABINETS	W2182-363014/P	Casework USA by WB Mfg	3' - 0"	1' - 2"	2' - 6"						
C3	UPPER CABINET OPEN SHELVING	W1180-364814/P	Casework USA by WB Mfg	3' - 0"	1' - 2"	4' - 0"	P. LAM.					
C4	DOUBLE DOOR BASE CABINET	B3122-303533/P Custom	Casework USA by WB Mfg	2' - 6"	2' - 9"	2' - 10 1/2"	P. LAM.	ER		X		PROVIDE 1" CUSTOM SOLID DIVIDER PANELS
C5	CUBICLE STORAGE WITH DOORS	T3222-368423/P	Casework USA by WB Mfg	3' - 0"	1' - 11"	7' - 0"	P. LAM.					
C6	TALL SPLIT DOUBLE DOOR CABINET	T5622368423/P	Casework USA by WB Mfg	3' - 0"	1' - 11"	7' - 0"	P. LAM.					
C7	SINGLE DOOR BASE CABINET WITH ONE DRAWER	B2110-123523/P	Casework USA by WB Mfg	1' - 0"	2' - 0"	2' - 8 1/2"	P. LAM.	SS	X	X		PROVIDE DRAWER LOCKS
C8	SINGLE DOOR BASE CABINET WITH ONE DRAWER	B2120-183523/P	Casework USA by WB Mfg	1' - 6"	2' - 0"	2' - 8 1/2"	P. LAM.	SS	X	X		PROVIDE DRAWER LOCKS
C9	DOUBLE DOOR BASE CABINETS WITH TWO DRAWERS	B2400-333523/P Custom	Casework USA by WB Mfg	2' - 9"	2' - 0"	2' - 8 1/2"	P. LAM.	SS	X	X		PROVIDE DRAWER LOCKS
C10	DOUBLE DOOR TOP CABINETS	W2182-303014/P	Casework USA by WB Mfg	2' - 6"	1' - 0"	2' - 6"	P. LAM.					
C11	DOUBLE DOOR TOP CABINETS	W2182-243014/P	Casework USA by WB Mfg	2' - 0"	1' - 0"	2' - 6"	P. LAM.					
C12	DOUBLE DOOR TOP CABINETS	W2182-333014/P Custom	Casework USA by WB Mfg	2' - 9"	1' - 0"	2' - 6"	P. LAM.					
C13	SINGLE DOOR TOP CABINETS	W2110-183014/P	Casework USA by WB Mfg	1' - 6"	1' - 0"	2' - 6"	P. LAM.					
C14	DOUBLE DOOR TOP CABINETS	W2182-363614/P	Casework USA by WB Mfg	3' - 0"	1' - 2"	3' - 0"	P. LAM.					
C15	RECESSED DISPLAY CASE CABINET	PREMIERE	Claridge	6' - 4"	1' - 4"	4' - 4"	ALUM.		X			WIDTH, AND HEIGHT INCLUDES THE 2" ALUM. FRAME. CASE SIZE 4'-0" x 6'-0".
C16	RECESSED DISPLAY CASE CABINET	PREMIERE	Claridge	8' - 4"	1' - 4"	4' - 4"	ALUM.		X			WIDTH, AND HEIGHT INCLUDES THE 2" ALUM. FRAME. CASE SIZE 4'-0" x 8'-0".
C17	ADA ACCESSIBLE BASE CABINET	ADAS-362423/P	Casework USA by WB Mfg	3' - 0"	2' - 0"	2' - 9"	P. LAM.	SS		X	X	REFER TO PLUMBING DWGS FOR SINK/FAUCET SPECS.
C18	DOUBLE DOOR BASE CABINETS WITH TWO DRAWERS	B2400-363523/P	Casework USA by WB Mfg	3' - 0"	2' - 0"	2' - 8 1/2"	P. LAM.	SS	X	X		PROVIDE DRAWER LOCKS
C19	DOUBLE DOOR BASE CABINETS WITH TWO DRAWERS	B2425-363523/P	Casework USA by WB Mfg	3' - 0"	1' - 11"	2' - 8 1/2"						
C20	DOUBLE DOOR BASE CABINETS WITH TWO DRAWERS	B2400-303523/P	Casework USA by WB Mfg	2' - 6"	2' - 0"	2' - 8 1/2"	P. LAM.	P. LAM.	X	X		PROVIDE DRAWER LOCKS
C21	DOUBLE DOOR BASE CABINETS WITH TWO DRAWERS	B2400-363523/P	Casework USA by WB Mfg	3' - 0"	2' - 0"	2' - 8 1/2"	P. LAM.	ER	X	X		PROVIDE DRAWER LOCKS
C22	DOUBLE DOOR BASE CABINET	B3122-363512/P Custom	Casework USA by WB Mfg	3' - 0"	1' - 0"	2' - 9"	P. LAM.	P. LAM.				
C23	ROLLING ADA ACCESSIBLE BASE CABINET	Custom	Casework USA by WB Mfg	2' - 9"	2' - 0"	2' - 4 1/2"	P. LAM.					

ABBREVIATIONS:

BB	=	BUTCHER BLOCK	FF	=	FACTORY FINISH	SS	=	SOLID SURFACE
ER	=	EPOXY RESIN	P. LAM.	=	PLASTIC LAMINATE			

NOTE: ALL MOVABLE CASEWORK TO BE BOUGHT DIRECTLY BY DISTRICT AND INSTALLED BY G.C. ALL FIXED/ BUILT-IN CASEWORK TO BE BOUGHT AND INSTALLED BY G.C. THIS INFORMATION IS TO BE USED FOR COORDINATION.

H2M architects + engineers

538 Broad Hollow Road, 4th Floor East
Melville, NY 11747
631.756.8000 • www.h2m.com
Architecture & Landscape Architecture: No Certificate Required
Engineering Certificate of Authorization No.: 0018178

CONSULTANTS:

MARK	DATE	DESCRIPTION

REGISTERED ARCHITECT KEVIN MICHAEL MEDLER 038379 STATE OF NEW YORK

KEVIN M. MEDLER, R.A.
NY PROFESSIONAL ARCHITECT Lic. No. 038379

07/31/2024 Exp. Date

THE TRANSFERABILITY AND ACCURACY OF THIS DOCUMENT EXPIRES 90 CALENDAR DAYS FROM ORIGINAL IN ELECTRONIC FORMAT OR PRINTED COPY.

DESIGNED BY:	DRAWN BY:	CHECKED BY:	REVIEWED BY:
CWP	DOD/NPO	Checker	
PROJECT No: WPSD 2203	DATE: MARCH 2025	SCALE: AS SHOWN	

CLIENT

WHITE PLAINS CITY SCHOOL DISTRICT

ADDITION AT WHITE PLAINS HIGH SCHOOL

550 NORTH STREET, WHITE PLAINS, NY 10605

66-22-00-01-0-016-030

CONTRACT

CONTRACT G
GENERAL CONSTRUCTION

STATUS

FINAL BID SET

SHEET TITLE

CASEWORK AND EQUIPMENT SCHEDULE

DRAWING No.

A 600.00

C:\Users\ddesouza\Documents\WPSD2203_Central21_A_DDeSouzaDETUB.rvt

3/6/2025 2:51:01 PM

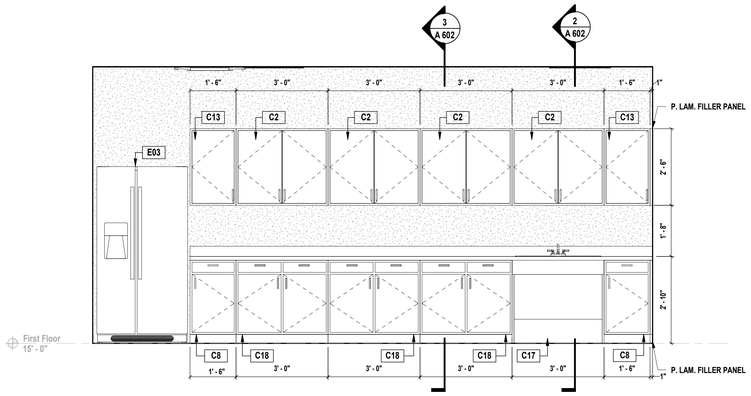

1 **Art Faculty Work Room Interior Elevation**
SCALE: 1/2" = 1'-0"

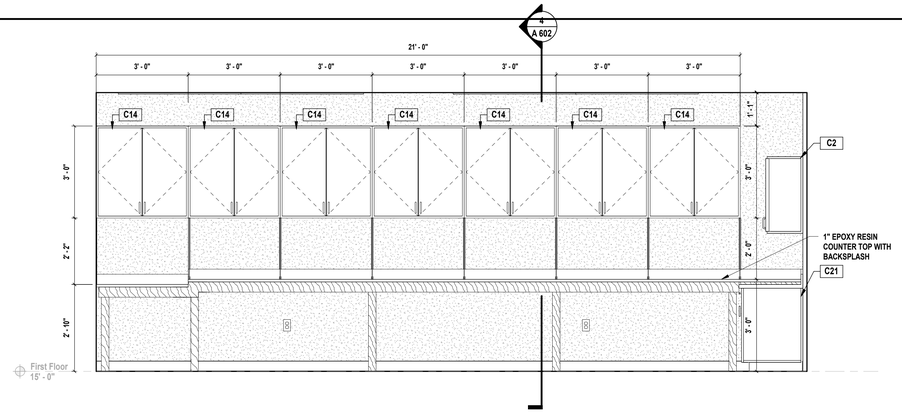

2 **Metal Shop Interior Elevation A**
SCALE: 1/2" = 1'-0"

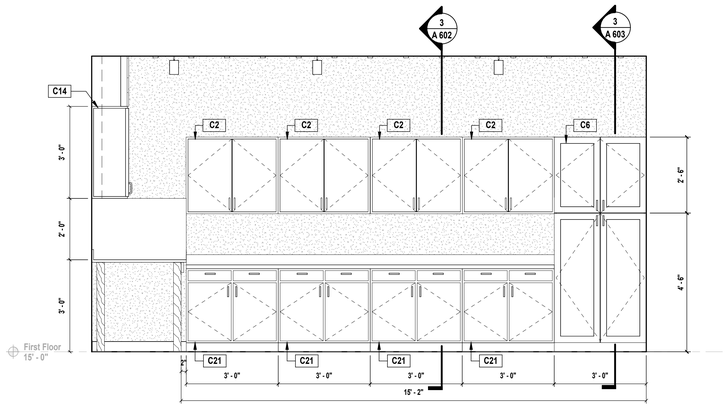

3 **Metal Shop Interior Elevation B**
SCALE: 1/2" = 1'-0"

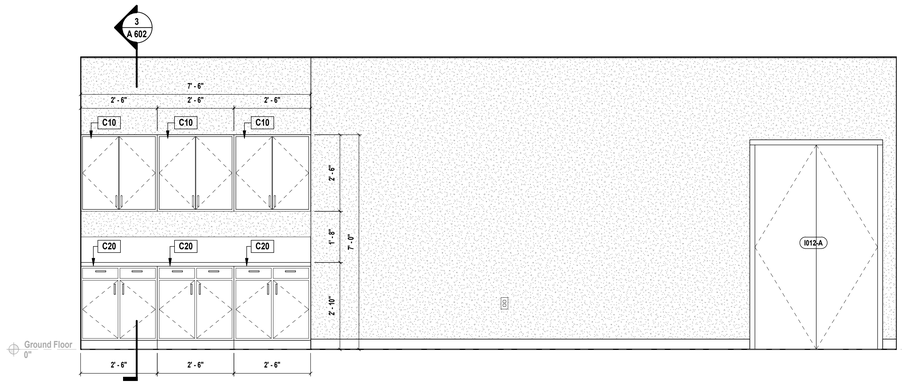

4 **Multi-Purpose Space Interior Elevation**
SCALE: 1/2" = 1'-0"

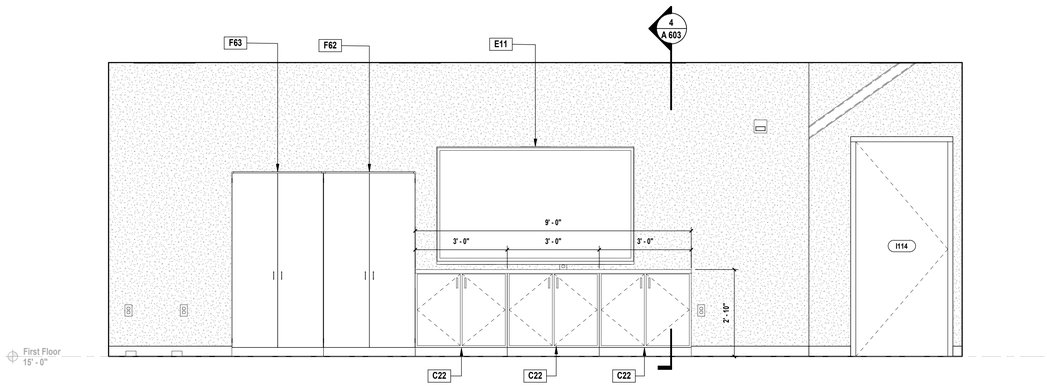

5 **Graphic/ Digital Arts Lab Interior Elevation**
SCALE: 1/2" = 1'-0"

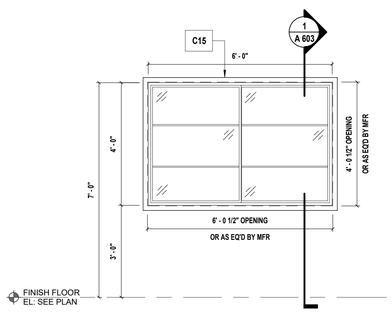

6 **Display Case Elevation**
SCALE: 1/2" = 1'-0"

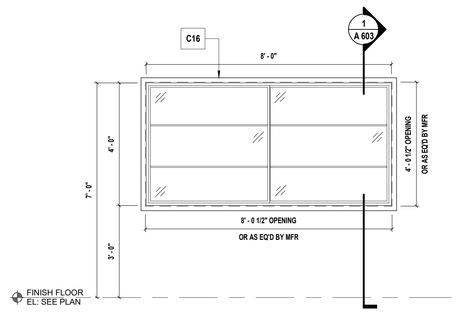

7 **Display Case Elevation**
SCALE: 1/2" = 1'-0"

H2M architects + engineers
538 Broad Hollow Road, 4th Floor East
Melville, NY 11747
631.756.8000 • www.h2m.com
Architecture & Landscape Architecture: No Certificate Required
Engineering Certificate of Authorization No.: 0018178

CONSULTANTS:

MARK	DATE	DESCRIPTION

REGISTERED ARCHITECT KEVIN MICHAEL MEDLER 038379 STATE OF NEW YORK

KEVIN M. MEDLER, R.A.
NY PROFESSIONAL ARCHITECT Lic. No. 038379

07/31/2024
Exp. Date

DESIGNED BY:	DRAWN BY:	CHECKED BY:	REVIEWED BY:
CWP	DOD/NPO	Checker	
PROJECT No: WPSD 2203	DATE: MARCH 2025	SCALE: AS SHOWN	

CLIENT
WHITE PLAINS CITY SCHOOL DISTRICT

ADDITION AT WHITE PLAINS HIGH SCHOOL

550 NORTH STREET, WHITE PLAINS, NY 10605

66-22-00-01-0-016-030

CONTRACT
CONTRACT G
GENERAL CONSTRUCTION

STATUS
FINAL BID SET

SHEET TITLE
CASEWORK ELEVATIONS AND NOTES

DRAWING No.
A 601.00

C:\Users\sbbeaucai\Documents\WPSD2203_Central21_A_DDwSolutsDR1L8.rvt
3/6/2025 2:51:06 PM

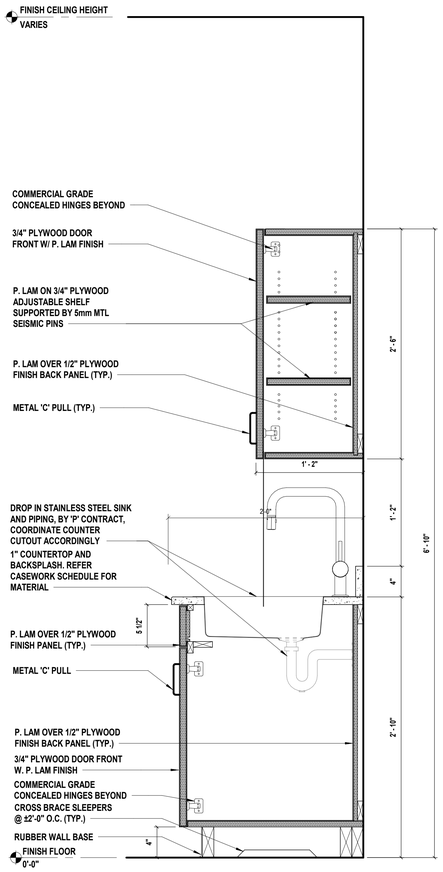

1 Millwork Section at Sink

SCALE: 1 1/2" = 1'-0"

NOTE:
ALL EDGE BANDS AND END PANELS TO BE FINISHED WITH MATCHING P.LAM, TYP.
FOR ALL CASEWORK. PROVIDE BALANCING SHEETS ON BACK OF ALL PANELS.

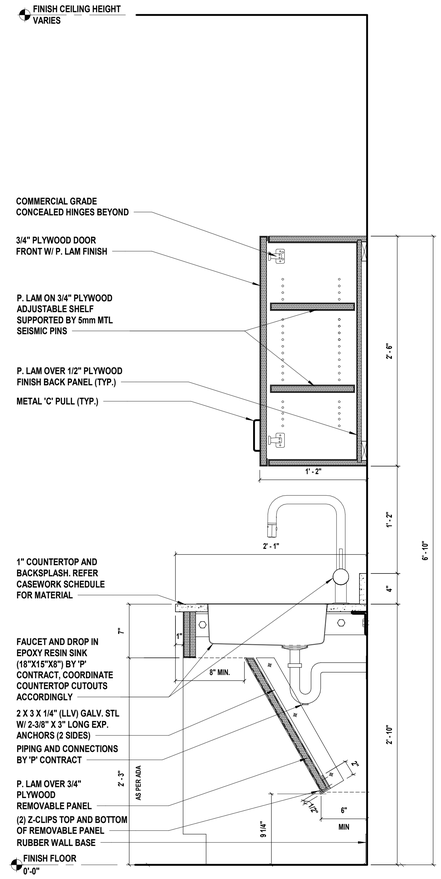

2 Millwork Section at Sink (ADA)

SCALE: 1 1/2" = 1'-0"

NOTE:
ALL EDGE BANDS AND END PANELS TO BE FINISHED WITH MATCHING P.LAM, TYP.
FOR ALL CASEWORK. PROVIDE BALANCING SHEETS ON BACK OF ALL PANELS.

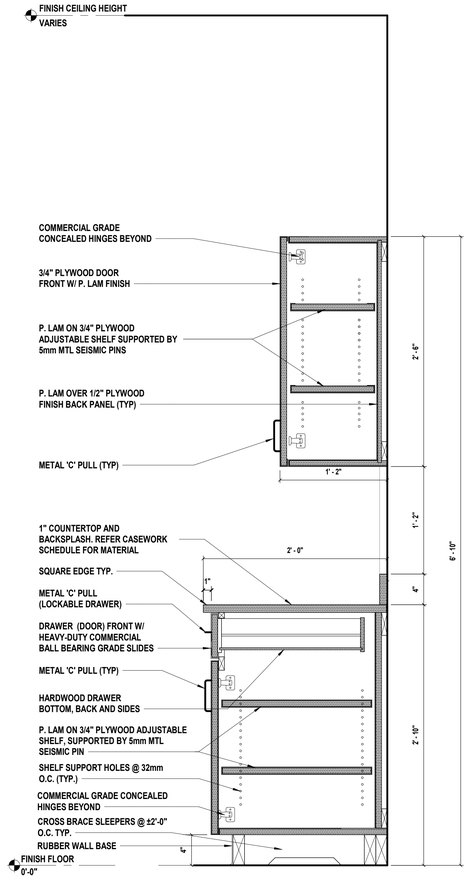

3 Millwork Section

SCALE: 1 1/2" = 1'-0"

NOTE:
ALL EDGE BANDS AND END PANELS TO BE FINISHED WITH MATCHING P.LAM, TYP.
FOR ALL CASEWORK. PROVIDE BALANCING SHEETS ON BACK OF ALL PANELS.

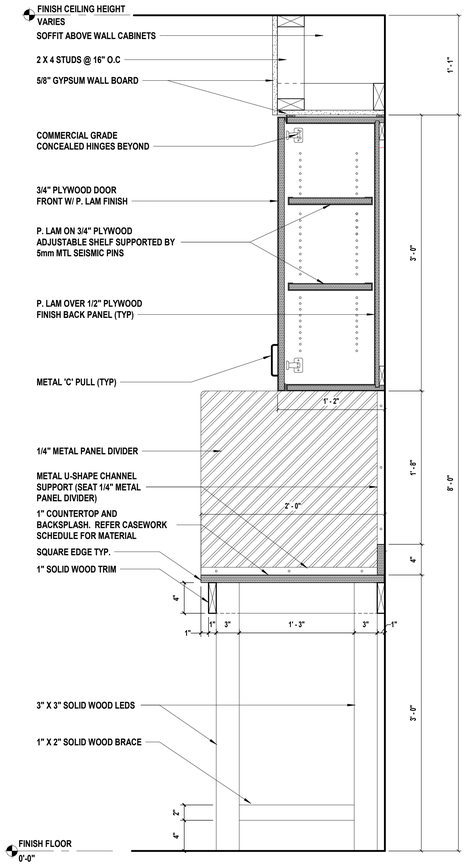

4 Millwork Section in Metal Shop

SCALE: 1 1/2" = 1'-0"

NOTE:
ALL EDGE BANDS AND END PANELS TO BE FINISHED WITH MATCHING P.LAM, TYP.
FOR ALL CASEWORK. PROVIDE BALANCING SHEETS ON BACK OF ALL PANELS.

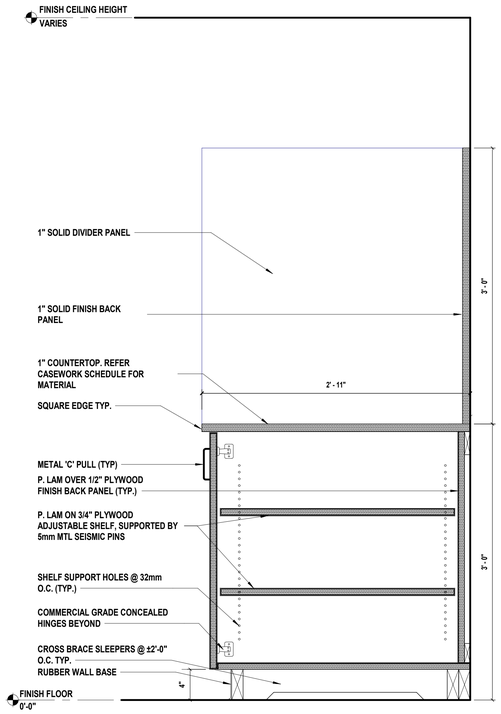

5 Custom Millwork in Dark Room

SCALE: 1 1/2" = 1'-0"

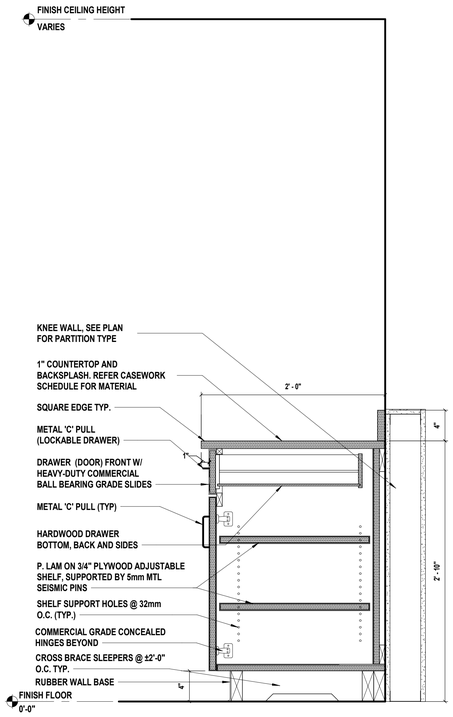

6 Millwork Base Cabinet Section

SCALE: 1 1/2" = 1'-0"

NOTE:
ALL EDGE BANDS AND END PANELS TO BE FINISHED WITH MATCHING P.LAM, TYP.
FOR ALL CASEWORK. PROVIDE BALANCING SHEETS ON BACK OF ALL PANELS.

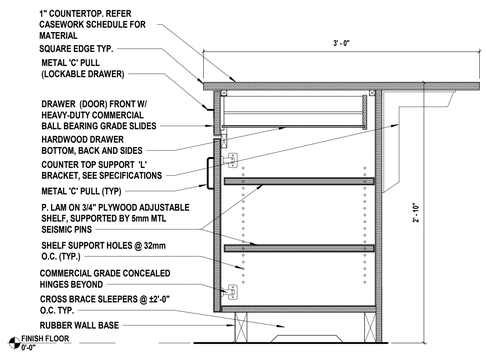

7 Millwork Section at Island

SCALE: 1 1/2" = 1'-0"

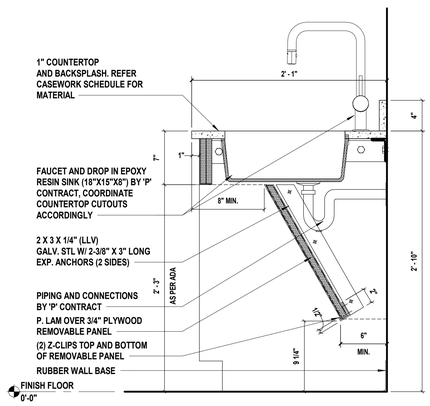

8 Section at Sink (ADA)

SCALE: 1 1/2" = 1'-0"

NOTE:
ALL EDGE BANDS AND END PANELS TO BE FINISHED WITH MATCHING P.LAM, TYP.
FOR ALL CASEWORK. PROVIDE BALANCING SHEETS ON BACK OF ALL PANELS.

H2M architects + engineers
538 Broad Hollow Road, 4th Floor East
Melville, NY 11747
631.756.8000 • www.h2m.com
Architecture & Landscape Architecture: No Certificate Required
Engineering Certificate of Authorization No.: 0018178

CONSULTANTS:

MARK	DATE	DESCRIPTION

REGISTERED ARCHITECT KEVIN MICHAEL MEDLER 038379 STATE OF NEW YORK

KEVIN M. MEDLER, R.A.
NY PROFESSIONAL ARCHITECT No. 038379
THE TRADITIONAL SEAL FOR DOCUMENTS ISSUED FOR ELECTRONIC PROCESSING IS A CLEAR, PERMANENT, BLACK SEAL.
ST310924 Exp. Date

DESIGNED BY:	DRAWN BY:	CHECKED BY:	REVIEWED BY:
CWP	DOD/NPO	Checker	
PROJECT No: WPSD 2203	DATE: MARCH 2025	SCALE: AS SHOWN	

CLIENT
WHITE PLAINS CITY SCHOOL DISTRICT

ADDITION AT WHITE PLAINS HIGH SCHOOL

550 NORTH STREET, WHITE PLAINS, NY 10605

66-22-00-01-0-016-030

CONTRACT
CONTRACT G
GENERAL CONSTRUCTION

STATUS
FINAL BID SET

SHEET TITLE
CASEWORK DETAILS

DRAWING No.
A 602.00

C:\Users\ddesouza\Documents\WPSD2203_Central21_A_DDdeSouzaDBTLB.rvt

3/6/2025 2:51:00 PM

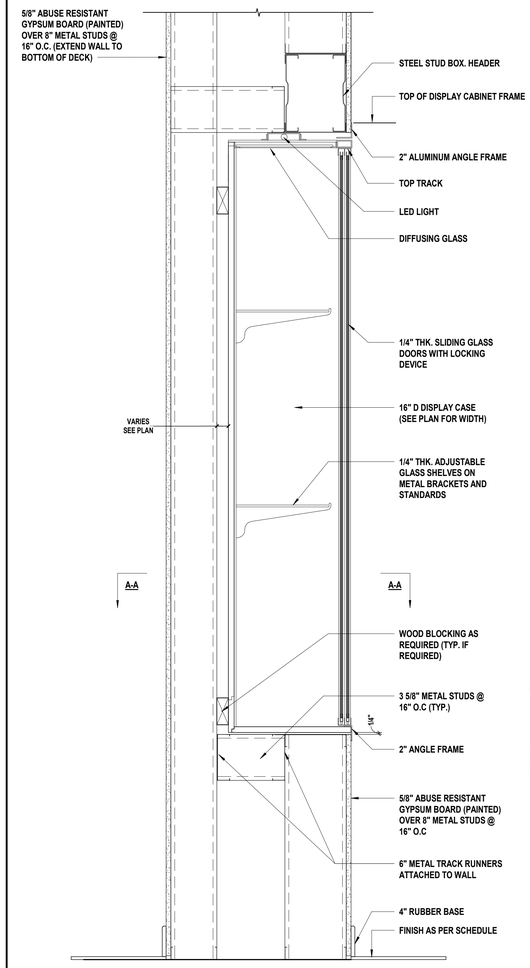

1 Display Case Section and Jamb Detail
SCALE: 1 1/2" = 1'-0"

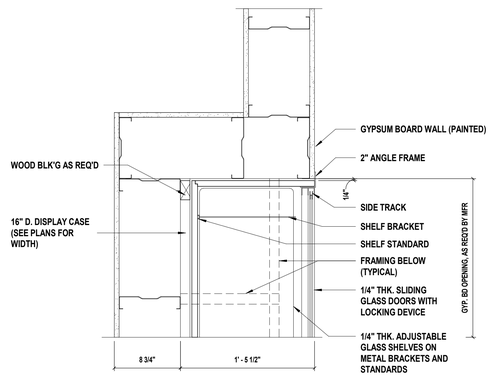

A-A

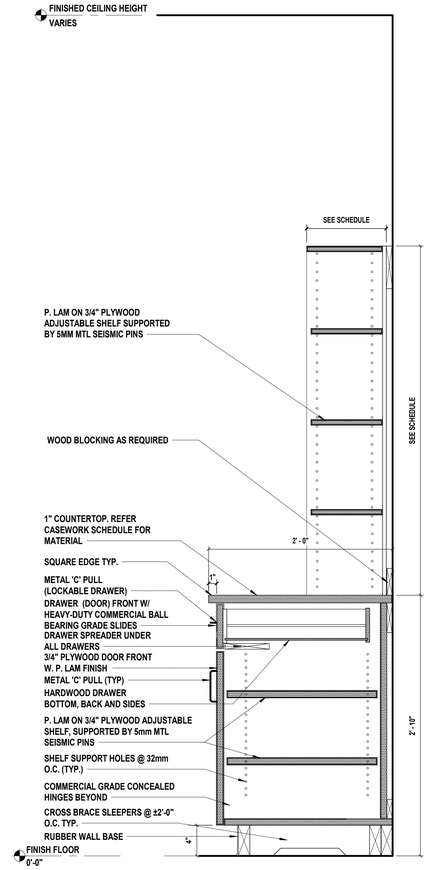

2 Millwork Section with Shelves
SCALE: 1 1/2" = 1'-0"

NOTE:
ALL EDGE BANDS AND END PANELS TO BE FINISHED WITH MATCHING P.LAM, TYP. FOR ALL CASEWORK. PROVIDE BALANCING SHEETS ON BACK OF ALL PANELS.

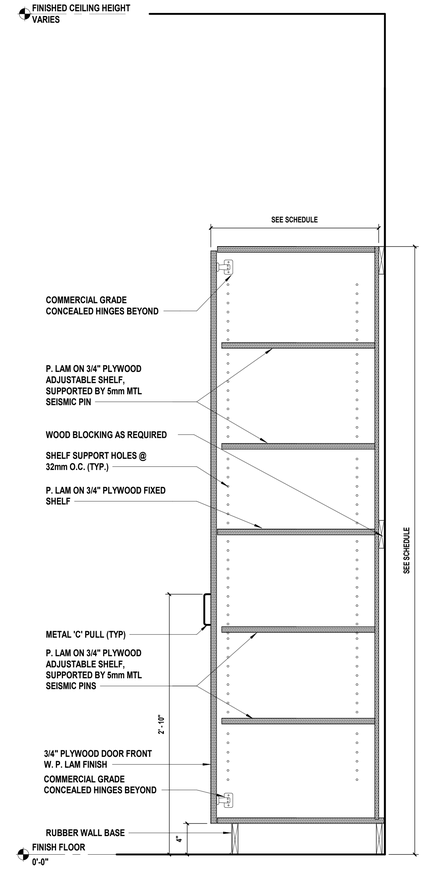

3 Millwork Section Full Height Cabinet
SCALE: 1 1/2" = 1'-0"

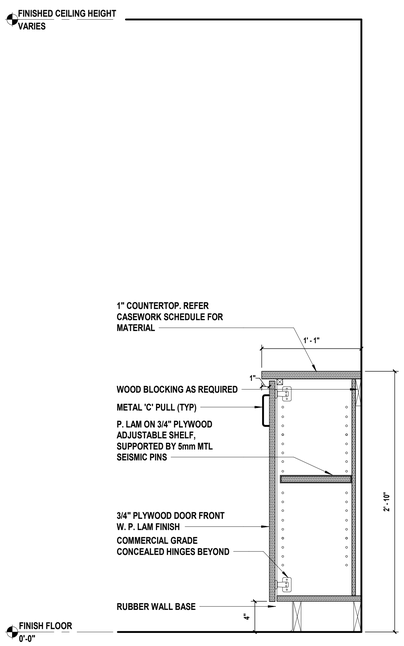

4 Millwork Section Base Cabinet Under BenQ
SCALE: 1 1/2" = 1'-0"

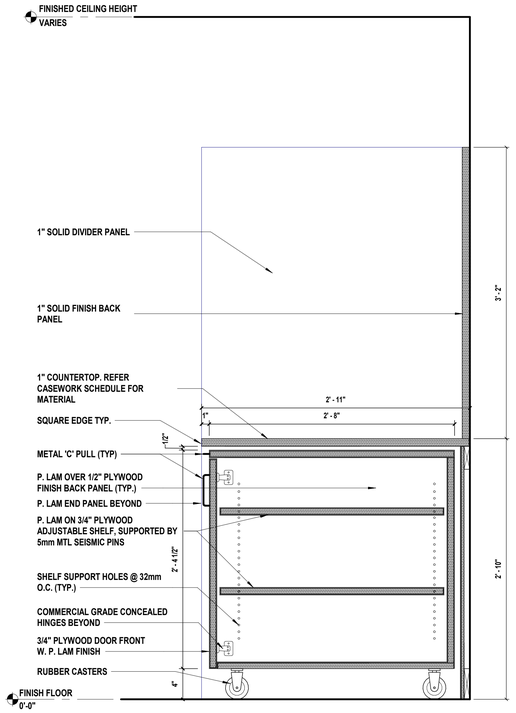

5 Custom Millwork in Dark Room ADA
SCALE: 1 1/2" = 1'-0"

H2M architects + engineers
538 Broad Hollow Road, 4th Floor East
Melville, NY 11747
631.756.8000 • www.h2m.com
Architecture & Landscape Architecture: No Certificate Required
Engineering Certificate of Authorization No.: 0018178

CONSULTANTS:

MARK	DATE	DESCRIPTION

REGISTERED ARCHITECT KEVIN MICHAEL MEDLER 038379 STATE OF NEW YORK

KEVIN M. MEDLER, R.A.
NY PROFESSIONAL ARCHITECT Lic. No. 038379

DESIGNED BY:	DRAWN BY:	CHECKED BY:	REVIEWED BY:
CWP	DOD/NPO	CWP/KMM	
PROJECT No: WPSD 2203	DATE: MARCH 2025	SCALE: AS SHOWN	

CLIENT
WHITE PLAINS CITY SCHOOL DISTRICT

ADDITION AT WHITE PLAINS HIGH SCHOOL

550 NORTH STREET, WHITE PLAINS, NY 10605

66-22-00-01-0-016-030

CONTRACT
CONTRACT G
GENERAL CONSTRUCTION

STATUS
FINAL BID SET

SHEET TITLE
CASEWORK DETAILS

DRAWING No.
A 603.00

C:\Users\dodavoz\AppData\Local\Temp\AcPublish_2204\Drawing1.dwg
3/6/2025 2:51:11 PM

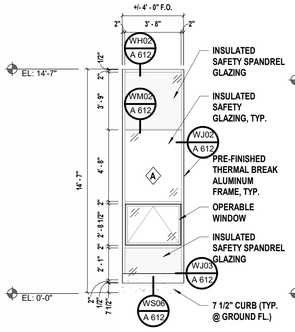

1 Window Elevation 'A'
SCALE: 1/4" = 1'-0"

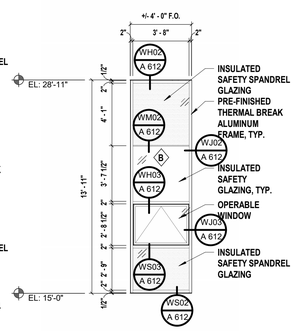

2 Window Elevation 'B'
SCALE: 1/4" = 1'-0"

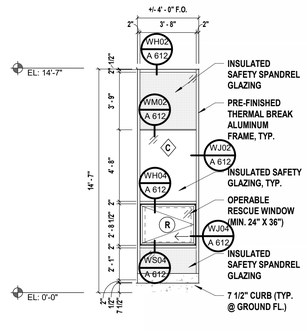

3 Window Elevation 'C'
SCALE: 1/4" = 1'-0"

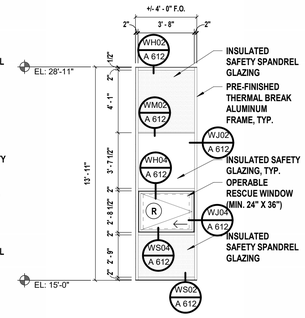

4 Window Elevation 'D'
SCALE: 1/4" = 1'-0"

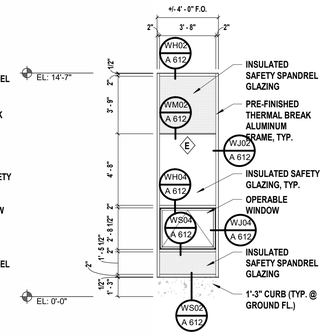

5 Window Elevation 'E'
SCALE: 1/4" = 1'-0"

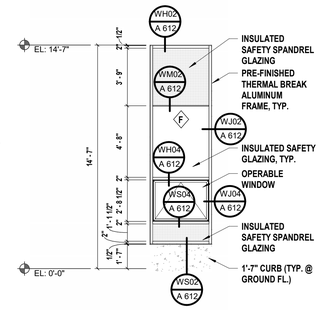

6 Window Elevation 'F'
SCALE: 1/4" = 1'-0"

WINDOW FILM LEGEND

- INSULATED SAFETY GLAZING AS PER SPECIFICATIONS.
- SECURITY GLAZING, LEXAN LEVEL III AS PER SPECIFICATIONS.
- SPANDREL AS PER GLAZING SPECIFICATIONS.

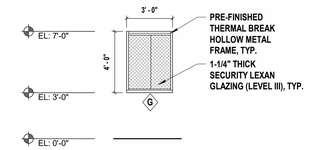

7 Window Elevation 'G'
SCALE: 1/4" = 1'-0"

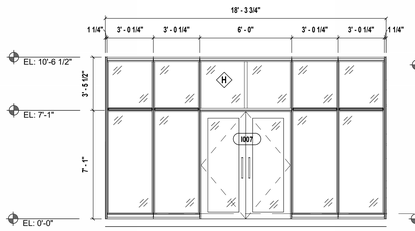

8 Student Art Gallery Elevation
SCALE: 1/4" = 1'-0"

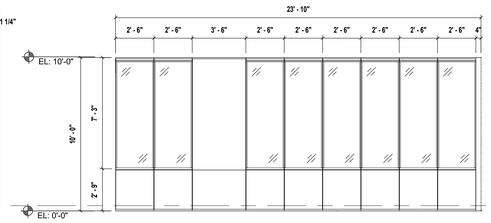

9 Student Workspace Elevation
SCALE: 1/4" = 1'-0"

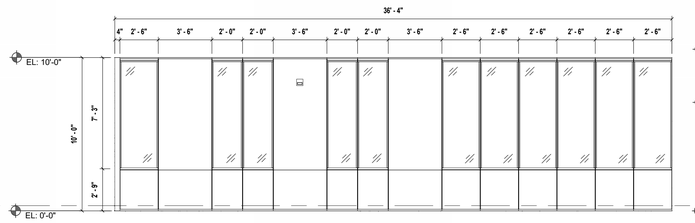

10 Student Workspace Elevation
SCALE: 1/4" = 1'-0"

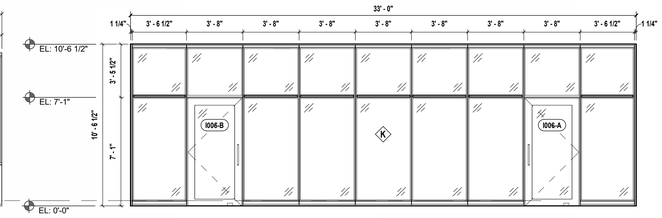

11 Culinary Arts Curtain Wall Elevation
SCALE: 1/4" = 1'-0"

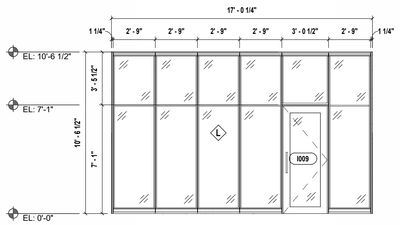

12 Study Hall/ Student Work Space Elevation
SCALE: 1/4" = 1'-0"

Window Schedule

Number	Name	TYPE (text)	QTY	WIDTH (text)	HEIGHT	MATERIAL (text)	HEAD DETAIL(text)	JAMB DETAIL(text)	SILL DETAIL (text)	MEETING RAIL (text)	SHADES PER WINDOW (text)	Comments
	CLERESTORY	E1	2	+/- 30'-7"	+/-5'-11"	ALUMINUM	WH05 / A613	WC02 / A 613	WS05 / A 612			
	CLERESTORY	F1	2	+/- 44'-6"	+/-5'-11"	ALUMINUM	WH05 / A613	WC02 / A 613	WS05 / A 612			
	BRIDGE	H1	1	+/- 13'-9"	+/-9'-6"	ALUMINUM	WH08 / A 613	WJ08 / A 613	WS08 / A 613			
I 004	CULINARY ARTS CAFE	A	1	+/- 4'-0"	+/- 13'-11"	ALUMINUM	WH02 / A 612	WJ02 / A 612	WS06 / A 612		1	
I 006	CULINARY ARTS KITCHEN	A	9	+/- 4'-0"	+/- 13'-11"	ALUMINUM	WH02 / A 612	WJ02 / A 612	WS06 / A 612		1	
I 006	CULINARY ARTS KITCHEN	K	1	+/- 33'-0"	+/-10'-6"	ALUMINUM						
I 007	STUDENT ART GALLERY	H	1	+/-18'-3"	+/-10'-6"	ALUMINUM						
I 008	S.T.E.A.M. LAB	A	3	+/- 4'-0"	+/- 13'-11"	ALUMINUM	WH02 / A 612	WJ02 / A 612	WS06 / A 612		1	
I 008c	SECURITY OFFICE	G	1	+/- 3'-0"	+/- 4'-0"	ALUMINUM						
I 009	STUDY HALL/ STUDENT WORK SPACE	L	1	+/- 17'-0 1/4"	+/- 10'-6 1/2"	ALUMINUM						
I 013	CLASSROOM	A	1	+/- 4'-0"	+/- 13'-11"	ALUMINUM	WH02 / A 612	WJ02 / A 612	WS06 / A 612		1	
I 013	CLASSROOM	C	1	+/- 4'-0"	+/- 13'-11"	ALUMINUM	WH02 / A 612	WJ02 / A 612	WS06 / A 612		1	
I 013b	I.T. CLOSET											
I 014	CLASSROOM	A	2	+/- 4'-0"	+/- 13'-11"	ALUMINUM	WH02 / A 612	WJ02 / A 612	WS06 / A 612		1	
I 014	CLASSROOM	C	1	+/- 4'-0"	+/- 13'-11"	ALUMINUM	WH02 / A 612	WJ02 / A 612	WS06 / A 612		1	
I 015	CLASSROOM	A	6	+/- 4'-0"	+/- 13'-11"	ALUMINUM	WH02 / A 612	WJ02 / A 612	WS06 / A 612		1	
I 015	CLASSROOM	C	1	+/- 4'-0"	+/- 13'-11"	ALUMINUM	WH02 / A 612	WJ02 / A 612	WS06 / A 612		1	
I 017	SP. ED. LIFE SKILLS APARTMENT 15:1:1	A	2	+/- 4'-0"	+/- 13'-11"	ALUMINUM	WH02 / A 612	WJ02 / A 612	WS06 / A 612		1	
I 017	SP. ED. LIFE SKILLS APARTMENT 15:1:1	C	1	+/- 4'-0"	+/- 13'-11"	ALUMINUM	WH02 / A 612	WJ02 / A 612	WS02 / A 612		1	
I 019	SP. ED. WORK/ JOB LAB (PAES) 6:1:1	C	1	+/- 4'-0"	+/- 13'-11"	ALUMINUM	WH02 / A 612	WJ02 / A 612	WS06 / A 612		1	
I 020	SP. ED. WORK/ JOB LAB (PAES) 15:1:1	A	1	+/- 4'-0"	+/- 13'-11"	ALUMINUM	WH02 / A 612	WJ02 / A 612	WS02 / A 612		1	
I 020	SP. ED. WORK/ JOB LAB (PAES) 15:1:1	C	1	+/- 4'-0"	+/- 13'-11"	ALUMINUM	WH02 / A 612	WJ02 / A 612	WS02 / A 612			
I 021	SP. ED. WORK/ JOB LAB (PAES) 15:1:1	F	4	+/- 4'-0"	+/- 12'-11"	ALUMINUM	WH02 / A 612	WJ02 / A 612	WS02 / A 612			
I 021	SP. ED. WORK/ JOB LAB (PAES) 15:1:1	E	1	+/- 4'-0"	+/- 13'-3"	ALUMINUM	WH02 / A 612	WJ02 / A 612	WS02 / A 612			
I 021	SP. ED. WORK/ JOB LAB (PAES) 15:1:1	C	1	+/- 4'-0"	+/- 13'-11"	ALUMINUM	WH02 / A 612	WJ02 / A 612	WS02 / A 612			
I 100	SP. ED. WORK EXPERIENCE (WE) 15:1:1	B	3	+/- 4'-0"	+/- 13'-10"	ALUMINUM	WH02 / A 612	WJ02 / A 612	WS02 / A 612		1	
I 100	SP. ED. WORK EXPERIENCE (WE) 15:1:1	D	1	+/- 4'-0"	+/- 13'-10"	ALUMINUM	WH02 / A 612	WJ02 / A 612	WS02 / A 612		1	
I 102	METAL WORK JEWELERY & SCULPTING ROOM	B	4	+/- 4'-0"	+/- 13'-10"	ALUMINUM	WH02 / A 612	WJ02 / A 612	WS02 / A 612		1	
I 102	METAL WORK JEWELERY & SCULPTING ROOM	D	1	+/- 4'-0"	+/- 13'-10"	ALUMINUM	WH02 / A 612	WJ02 / A 612	WS02 / A 612		1	
I 102a	KILN ROOM	B	2	+/- 4'-0"	+/- 13'-10"	ALUMINUM	WH02 / A 612	WJ02 / A 612	WS02 / A 612		1	
I 104	CERAMICS ROOM	B	4	+/- 4'-0"	+/- 13'-10"	ALUMINUM	WH02 / A 612	WJ02 / A 612	WS02 / A 612		1	
I 104	CERAMICS ROOM	D	1	+/- 4'-0"	+/- 13'-10"	ALUMINUM	WH02 / A 612	WJ02 / A 612	WS02 / A 612		1	
I 106	ART STUDIO ROOM 3	B	8	+/- 4'-0"	+/- 13'-10"	ALUMINUM	WH02 / A 612	WJ02 / A 612	WS02 / A 612		1	
I 106a	ST.	B	1	+/- 4'-0"	+/- 13'-10"	ALUMINUM	WH02 / A 612	WJ02 / A 612	WS02 / A 612			
I 108	FASHION DESIGN ROOM	B	7	+/- 4'-0"	+/- 13'-10"	ALUMINUM	WH02 / A 612	WJ02 / A 612	WS02 / A 612		1	
I 108	FASHION DESIGN ROOM	D	1	+/- 4'-0"	+/- 13'-10"	ALUMINUM	WH02 / A 612	WJ02 / A 612	WS02 / A 612		1	
I 109	STUDENT WORK SPACE	I	1	+/- 23'-10"	+/-10'-0"	ALUMINUM						
I 109	STUDENT WORK SPACE	J	1	+/- 36'-4"	+/-10'-0"	ALUMINUM						
I 110	ART STUDIO ROOM 1	B	2	+/- 4'-0"	+/- 13'-10"	ALUMINUM	WH02 / A 612	WJ02 / A 612	WS02 / A 612		1	
I 110	ART STUDIO ROOM 1	D	1	+/- 4'-0"	+/- 13'-10"	ALUMINUM	WH02 / A 612	WJ02 / A 612	WS02 / A 612		1	
I 112	ART STUDIO ROOM 2	B	3	+/- 4'-0"	+/- 13'-10"	ALUMINUM	WH02 / A 612	WJ02 / A 612	WS02 / A 612		1	
I 112	ART STUDIO ROOM 2	D	1	+/- 4'-0"	+/- 13'-10"	ALUMINUM	WH02 / A 612	WJ02 / A 612	WS02 / A 612		1	
I 114	GRAPHIC/DIGI. ARTS LAB	B	2	+/- 4'-0"	+/- 13'-10"	ALUMINUM	WH02 / A 612	WJ02 / A 612	WS02 / A 612		1	
I 114	GRAPHIC/DIGI. ARTS LAB	D	1	+/- 4'-0"	+/- 13'-10"	ALUMINUM	WH02 / A 612	WJ02 / A 612	WS02 / A 612		1	
I 116	PHOTOGRAPHY ROOM	B	1	+/- 4'-0"	+/- 13'-10"	ALUMINUM	WH02 / A 612	WJ02 / A 612	WS02 / A 612		1	
I 116	PHOTOGRAPHY ROOM	D	1	+/- 4'-0"	+/- 13'-10"	ALUMINUM	WH02 / A 612	WJ02 / A 612	WS02 / A 612		1	
I 117	SP. ED. WORK EXPERIENCE (WE)	B	7	+/- 4'-0"	+/- 13'-10"	ALUMINUM	WH02 / A 612	WJ02 / A 612	WS02 / A 612		1	
I 117	INFORMATION LAB	D	1	+/- 4'-0"	+/- 13'-10"	ALUMINUM	WH02 / A 612	WJ02 / A 612	WS02 / A 612		1	
I B000	BRIDGE I	I1	2	+/- 27'-4"	+/- 13'-10"	ALUMINUM	WH01 / A 612	WJ02 / A 612	WS02 / A 612			
I C007	STORAGE											
I V001	VESTIBULE	C1	1	+/- 32'-0"	+/- 28'-3"	ALUMINUM	WH01 / A 612	WJ02 / A 612	WS01 / A 612			
I V001	VESTIBULE	D1	1	+/- 12'-9"	+/- 28'-3"	ALUMINUM	WH01 / A 612	WC01 / A 613	WS01 / A 612			
I V002	VESTIBULE	A1	1	+/- 24'-9"	+/- 28'-3"	ALUMINUM	WH01 / A 612	WJ01 / A 612	WS01 / A 612			
I V002	VESTIBULE	G1	1	+/- 24'-2"	+/- 24'-1"	ALUMINUM	WH06 / A 613	WJ01 / A 612	WS01 / A 612			
I V002	VESTIBULE	B1	1	+/- 18'-9"	+/- 28'-2"	ALUMINUM	WH01 / A 612	WJ01 / A 612	WS01 / A 612			

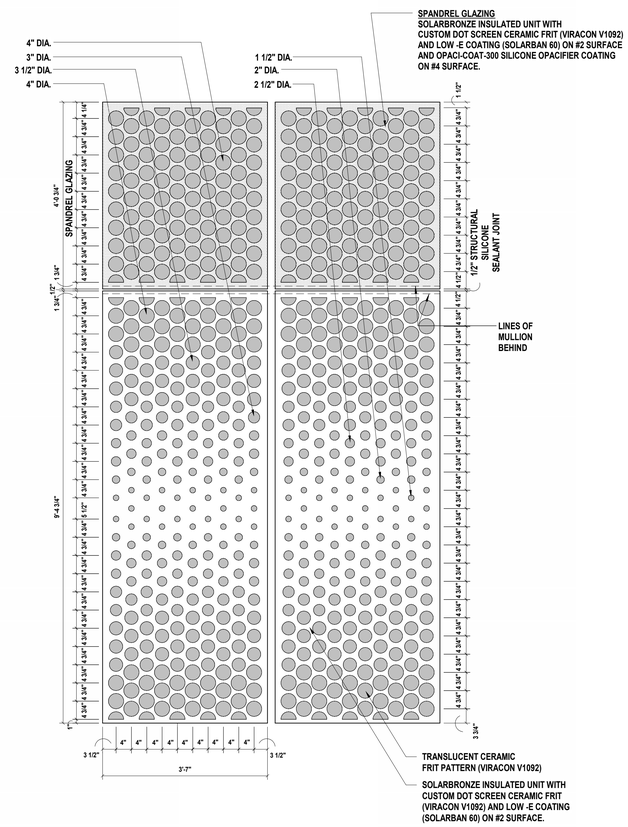

13 Typical Ceramic Frit Pattern - Bridge Curtain Wall Glazing
SCALE: 3/4" = 1'-0"

H2M architects + engineers
538 Broad Hollow Road, 4th Floor East
Melville, NY 11747
631.756.8000 • www.h2m.com
Architecture & Landscape Architecture: No Certificate Required
Engineering Certificate of Authorization No.: 0018178

CONSULTANTS:

MARK	DATE	DESCRIPTION
2	01-10-2025	SED ADDENDUM 2

KEVIN M. MEDLER, R.A.
NY PROFESSIONAL ARCHITECT Lic. No. 036379

DESIGNED BY:	DRAWN BY:	CHECKED BY:	REVIEWED BY:
CWP	DOD/NPO	Checker	
PROJECT No: WPSD 2203	DATE: MARCH 2025	SCALE: AS SHOWN	

CLIENT

WHITE PLAINS CITY SCHOOL DISTRICT

ADDITION AT WHITE PLAINS HIGH SCHOOL

550 NORTH STREET, WHITE PLAINS, NY 10605

66-22-00-01-0-016-030

CONTRACT

CONTRACT G
GENERAL CONSTRUCTION

STATUS

FINAL BID SET

SHEET TITLE

WINDOW ELEVATIONS AND SCHEDULE

DRAWING No.

A 610.00

C:\Users\ddesouza\Documents\WPSD2203_Central21_A_DDeSouzaDXT18.rvt

3/20/2025 3:14:43 PM

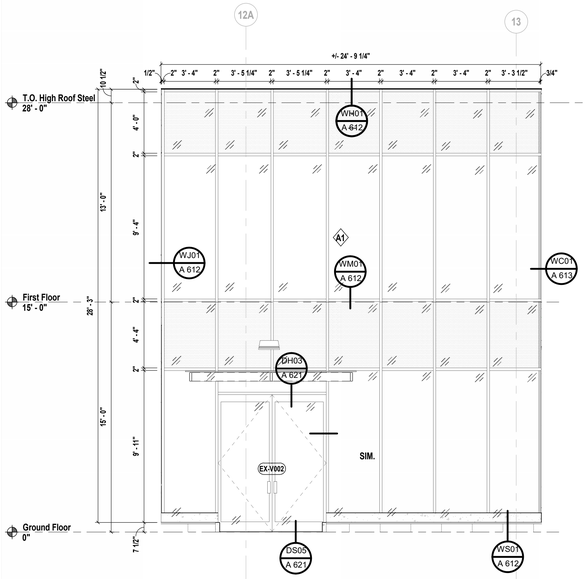

1 **7 1/2" Curtain Wall Elevation**
SCALE: 1/4" = 1'-0"

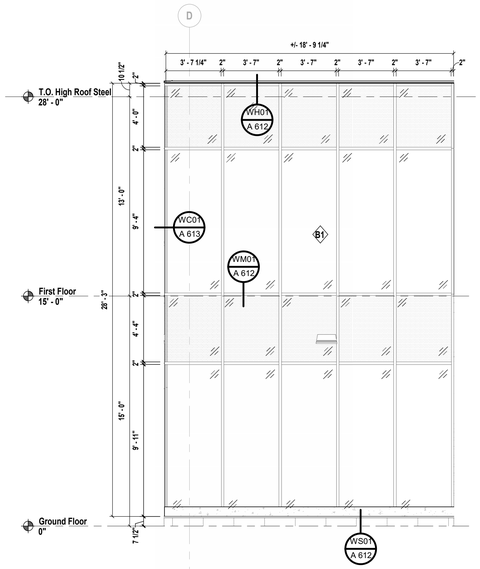

2 **7 1/2" Curtain Wall Elevation**
SCALE: 1/4" = 1'-0"

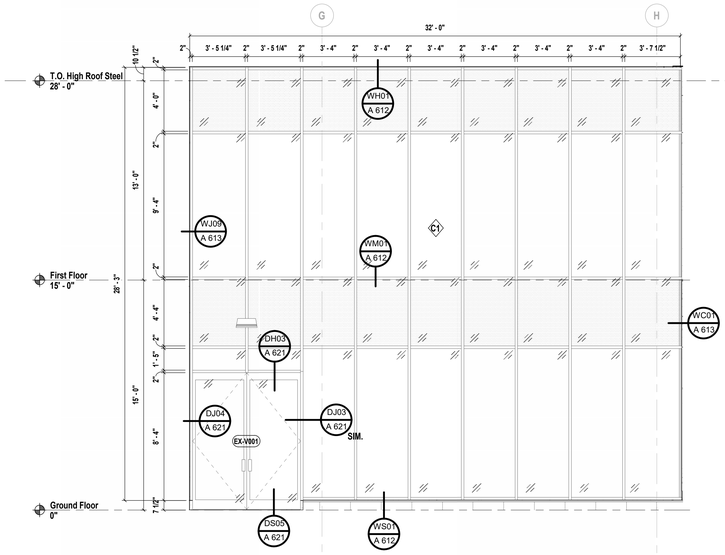

3 **7 1/2" Curtain Wall Elevation**
SCALE: 1/4" = 1'-0"

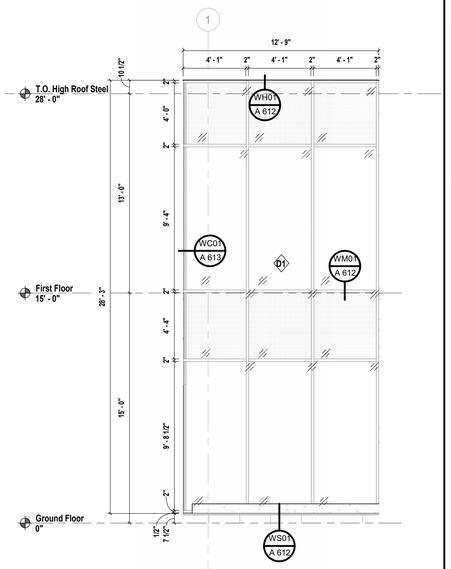

4 **7 1/2" Curtain Wall Elevation**
SCALE: 1/4" = 1'-0"

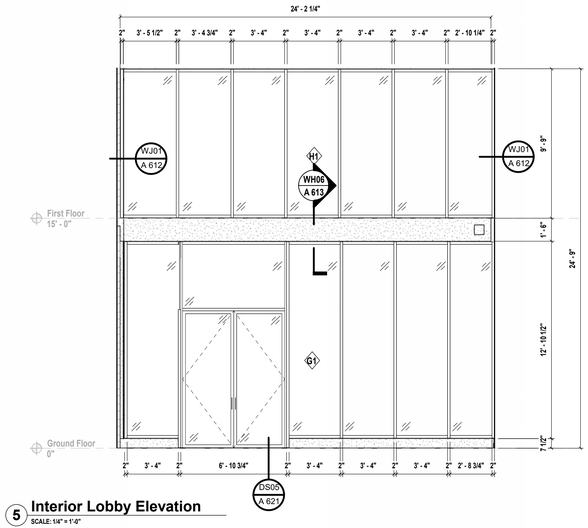

5 **Interior Lobby Elevation**
SCALE: 1/4" = 1'-0"

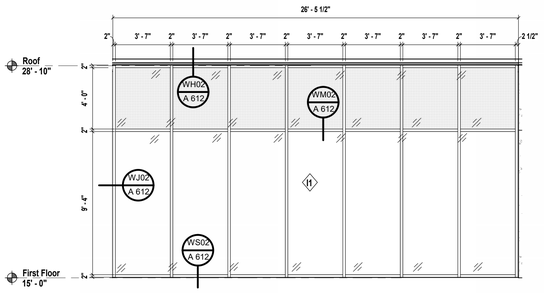

6 **Bridge Curtain Wall Elevation**
SCALE: 1/4" = 1'-0"
NOTE: SEE DRAWING 13/ A610.00 FOR TYPICAL CERAMIC FRIT PATTERN AT BRIDGE CURTAIN WALL GLAZING.

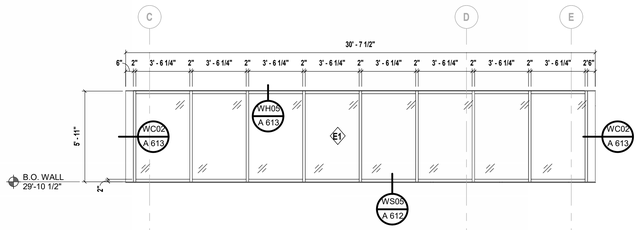

7 **Clerestory Elevation**
SCALE: 1/4" = 1'-0"

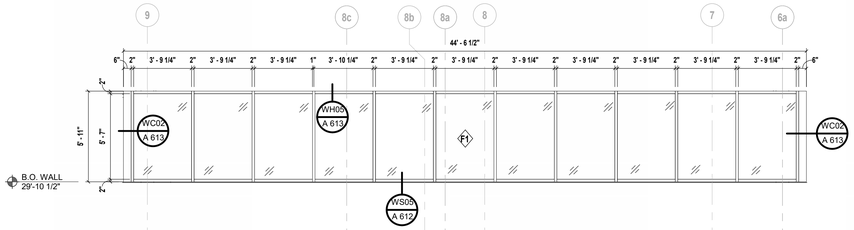

8 **Clerestory Elevation**
SCALE: 1/4" = 1'-0"

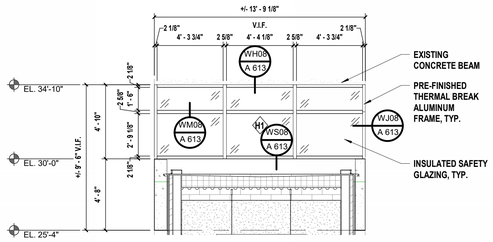

9 **Above Bridge Curtain Wall Elevation**
SCALE: 1/4" = 1'-0"

H2M architects + engineers
538 Broad Hollow Road, 4th Floor East
Melville, NY 11747
631.756.8000 • www.h2m.com
Architecture & Landscape Architecture: No Certificate Required
Engineering Certificate of Authorization No.: 0018178

CONSULTANTS:

MARK	DATE	DESCRIPTION

KEVIN M. MEDLER, R.A.
NY PROFESSIONAL ARCHITECT Lic. No. 036379

DESIGNED BY:	DRAWN BY:	CHECKED BY:	REVIEWED BY:
CWP	DOD/NPO	Checker	-
PROJECT No: WPSD 2203	DATE: MARCH 2025	SCALE: AS SHOWN	

CLIENT
WHITE PLAINS CITY SCHOOL DISTRICT

ADDITION AT WHITE PLAINS HIGH SCHOOL

550 NORTH STREET, WHITE PLAINS, NY 10605

66-22-00-01-0-016-030

CONTRACT
CONTRACT G
GENERAL CONSTRUCTION

STATUS
FINAL BID SET

SHEET TITLE
CURTAIN WALL ELEVATIONS

DRAWING No.
A 611.00

C:\Users\dsouza\Documents\WPSD2203_Central\21_A_DDxSouzaDBT18.rvt

3/20/2025 3:14:50 PM

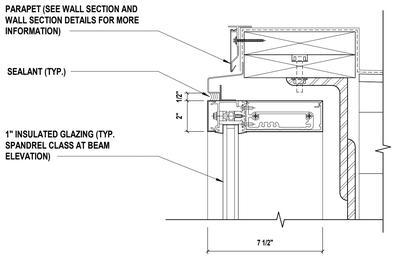

WH01 7 1/2" Curtain Wall System Head Detail
SCALE: 3" = 1'-0"

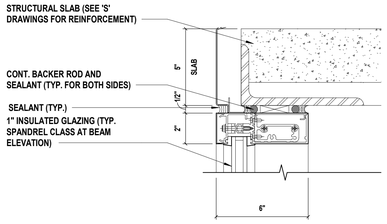

WH02 6" Curtain Wall System Head Detail
SCALE: 3" = 1'-0"

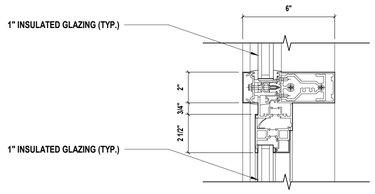

WH03 6" Project Out Curtain Wall Window Head Detail
SCALE: 3" = 1'-0"

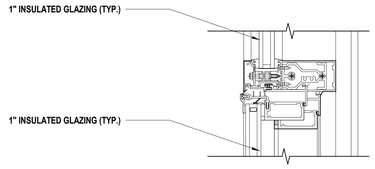

WH04 6" Out Swing Casement Curtain Wall Rescue Window Head Detail
SCALE: 3" = 1'-0"

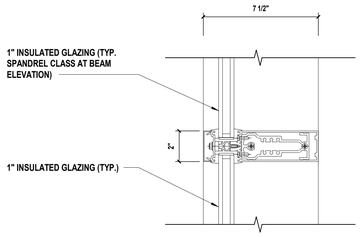

WM01 7 1/2" Curtain Wall System Horizontal Mullion Detail
SCALE: 3" = 1'-0"

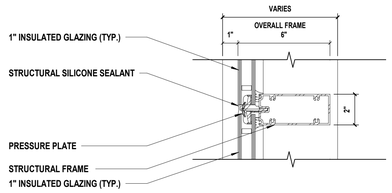

WM02 6" Curtain Wall System Horizontal Mullion Detail
SCALE: 3" = 1'-0"

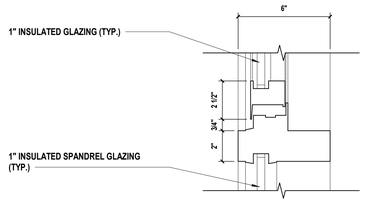

WS03 6" Project Out Curtain Wall Window Sill Detail
SCALE: 3" = 1'-0"

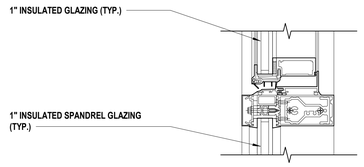

WS04 6" Out Swing Casement Curtain Wall Rescue Window Sill Detail
SCALE: 3" = 1'-0"

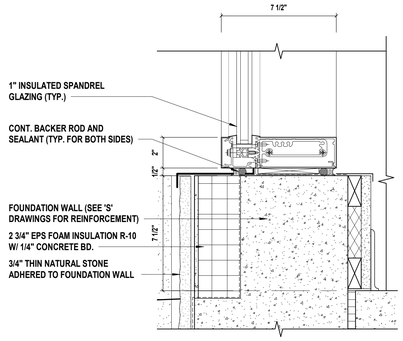

WS01 7 1/2" Curtain Wall System Sill Detail
SCALE: 3" = 1'-0"

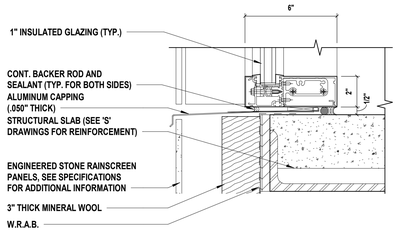

WS02 6" Curtain Wall System Sill Detail
SCALE: 3" = 1'-0"

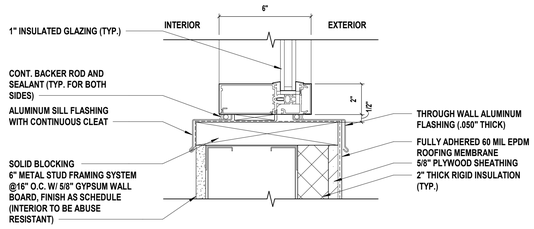

WS05 6" Curtain Wall System Sill Detail At Clerestory
SCALE: 3" = 1'-0"

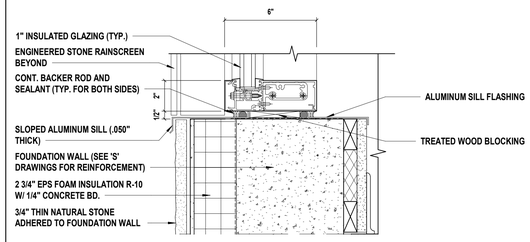

WS06 6" Curtain Wall System Sill Detail
SCALE: 3" = 1'-0"

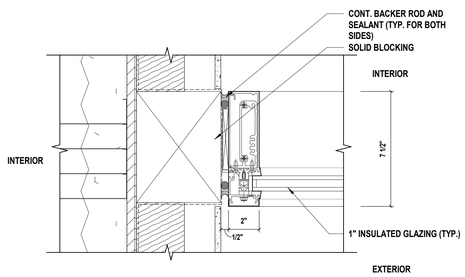

WJ01 7 1/2" Curtain Wall System Jamb Detail
SCALE: 3" = 1'-0"

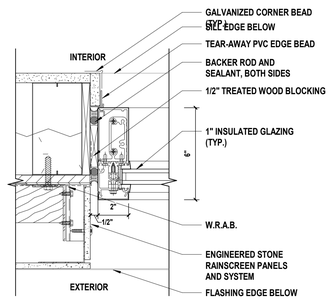

WJ02 6" Curtain Wall System Jamb Detail
SCALE: 3" = 1'-0"

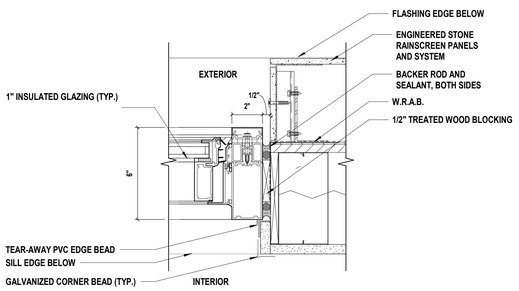

WJ03 6" Project Out Curtain Wall Window Jamb Detail
SCALE: 3" = 1'-0"

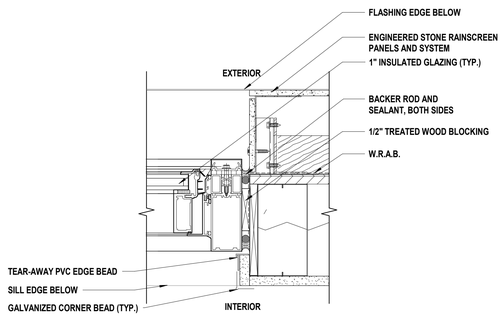

WJ04 6" Out Swing Casement Curtain Wall Rescue Window Jamb Detail
SCALE: 3" = 1'-0"

H2M architects + engineers
538 Broad Hollow Road, 4th Floor East
Melville, NY 11747
631.756.8000 • www.h2m.com
Architecture & Landscape Architecture: No Certificate Required
Engineering Certificate of Authorization No.: 0018178

CONSULTANTS:

MARK	DATE	DESCRIPTION

KEVIN M. MEDLER, R.A.
NY PROFESSIONAL ARCHITECT Lic. No. 036379

DESIGNED BY:	DRAWN BY:	CHECKED BY:	REVIEWED BY:
CWP	DOD/NPO	Checker	

PROJECT No:	DATE:	SCALE:
WPSD 2203	MARCH 2025	AS SHOWN

CLIENT
WHITE PLAINS CITY SCHOOL DISTRICT

ADDITION AT WHITE PLAINS HIGH SCHOOL

550 NORTH STREET, WHITE PLAINS, NY 10605

66-22-00-01-0-016-030

CONTRACT
CONTRACT G GENERAL CONSTRUCTION

STATUS
FINAL BID SET

SHEET TITLE
TYPICAL CURTAIN WALL DETAILS

DRAWING No.
A 612.00

C:\Users\ddesouza\Documents\WPSD2203_Centralized_A_DDeSouzaDBTL8.rvt

3/6/2025 2:51:40 PM

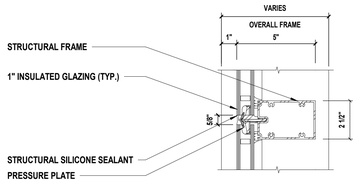

WM03 5" Curtain Wall System Mullion Detail
SCALE: 3" = 1'-0"

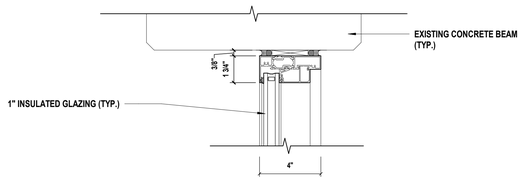

WH08 4" Curtain Wall Head Detail
SCALE: 3" = 1'-0"

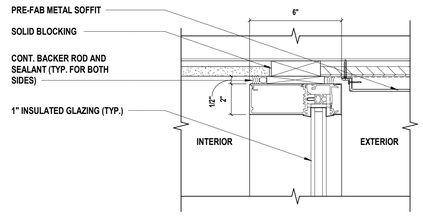

WH05 6" Curtain Wall System Head Detail At Clerestory
SCALE: 3" = 1'-0"

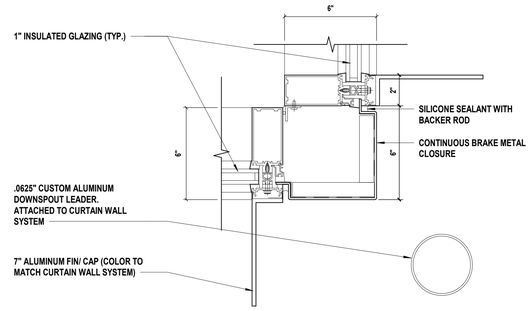

WC02 6" Curtain Wall System Corner Detail
SCALE: 3" = 1'-0"

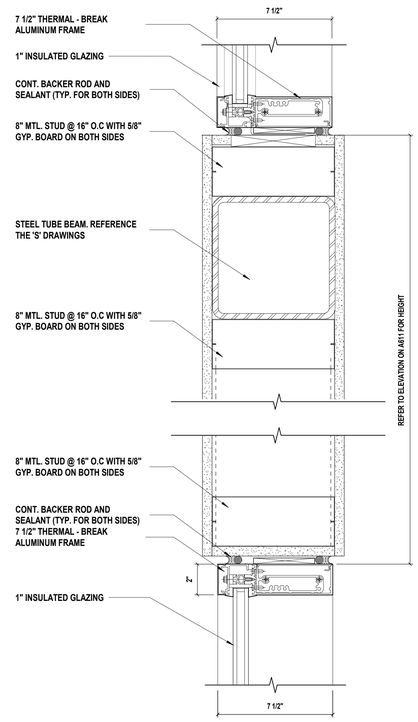

WH06 7 1/2" Curtain Wall Head and Sill Detail
SCALE: 3" = 1'-0"

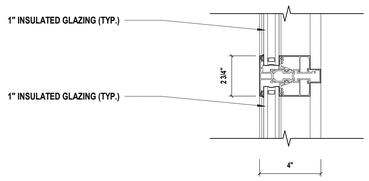

WM08 4" Curtain Wall Intermediate Detail
SCALE: 3" = 1'-0"

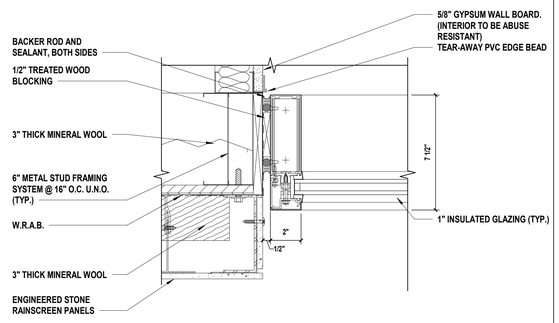

WJ09 7 1/2" Curtain Wall System Jamb Detail
SCALE: 3" = 1'-0"

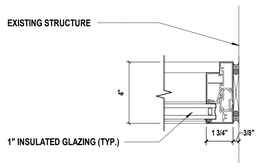

WJ08 4" Curtain Wall Jamb Detail
SCALE: 3" = 1'-0"

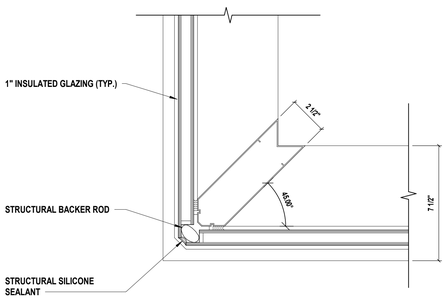

WC01 7 1/2" Curtain Wall System Corner Detail
SCALE: 3" = 1'-0"

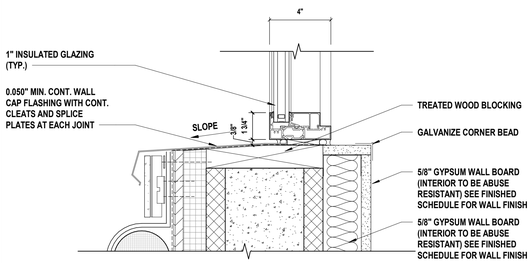

WS08 4" Curtain Wall Sill Detail
SCALE: 3" = 1'-0"

H2M architects + engineers
538 Broad Hollow Road, 4th Floor East
Melville, NY 11747
631.756.8000 • www.h2m.com
Architecture & Landscape Architecture: No Certificate Required
Engineering Certificate of Authorization No.: 0018178

CONSULTANTS:

MARK	DATE	DESCRIPTION

REGISTERED ARCHITECT KEVIN MICHAEL MEDLER 038379 STATE OF NEW YORK

KEVIN M. MEDLER, R.A.
NY PROFESSIONAL ARCHITECT Lic. No. 038379
THE TRANSFERABILITY AND ACCURACY EXCEPT BY A LICENSED PROFESSIONAL IS ILLEGAL

DESIGNED BY:	DRAWN BY:	CHECKED BY:	REVIEWED BY:
CWP	DOD/NPO	CWP/KMM	
PROJECT No: WPSD 2203	DATE: MARCH 2025	SCALE: AS SHOWN	

CLIENT
WHITE PLAINS CITY SCHOOL DISTRICT

ADDITION AT WHITE PLAINS HIGH SCHOOL

550 NORTH STREET, WHITE PLAINS, NY 10605

66-22-00-01-0-016-030

CONTRACT
CONTRACT G
GENERAL CONSTRUCTION

STATUS
FINAL BID SET

SHEET TITLE
TYPICAL CURTAIN WALL DETAILS

DRAWING No.
A 613.00

C:\Users\ddesouza\Documents\WPSD2203_CentralG21_A_DDeSouzaDETUB.rvt
3/6/2025 2:51:42 PM

DOOR SCHEDULE

	FROM ROOM		TO ROOM		DOOR SIZE		DOOR			FRAME			DETAILS										
DOOR NO.	NAME	NUMBER	NAME	NUMBER	WIDTH X HEIGHT	THICKNESS	DOOR TYPE	DOOR MATERIAL	DOOR FINISH	FRAME TYPE	FRAME MATERIAL	FRAME FINISH	HEAD	JAMB	SADDLE	FIRE RATING	HARDWARE SET	SECURITY ACCESS	SELF CLOSING	DOOR SIGNAGE	WEATHER STRIPPING	PANIC HARDWARE	COMMENTS
IB001	STORAGE	IB 001	STAIR A	I SA	(2) 40" x 80"	1 1/2"	B	HM	FF	F2	HM	FF	DH02	DJ02		45 MIN.	CR03-2	X	X	X		X	
IB002	STORAGE	IB 001	EXTERIOR	-	(2) 36" x 84"	1 1/2"	B	FRP	FF	F2	HM	FF	DH07	DJ07	DS01		CR03-2	X	X		X	X	
C001	CORRIDOR	I C002	CORRIDOR	I C001	(2) 36" x 84"	1 1/2"	F	WD	FF	F5	HM	FF	DH04	DJ02			04	X	X	X		X	ELECTRIFIED HARDWARE
C003	CORRIDOR	I C002	CORRIDOR	I C003	(2) 36" x 84"	1 1/2"	F	WD	FF	F5	HM	FF	DH04	DJ02		45 MIN.	CR05	X	X			X	ELECTRIFIED HARDWARE
C004	CORRIDOR	I C006	SECURE VESTIBULE	I V004	(2) 36" x 84"	1 1/2"	D	ALUM./ GL	FF	F5	HM	FF	DH04	DJ02			CR04-2	X	X		X	X	ELECTRIFIED HARDWARE
C005	CORRIDOR	I C004	VESTIBULE	V-003	(2) 36" x 84"	1 1/2"	D	ALUM./ GL	FF	F5	HM	FF	DH04	DJ02			CR04-1	X	X		X	X	ELECTRIFIED HARDWARE
C006	CORRIDOR	I C001	VESTIBULE	I V001	(2) 36" x 84"	1 1/2"	D	ALUM./ GL	FF	F5	HM	FF	DH04	DJ02		45 MIN.	CR04-3	X	X	X	X	X	ELECTRIFIED HARDWARE
EX-I001	MECHANICAL ROOM	I 001b	EXTERIOR	-	44" x 104"	1 1/2"	A	FRP	FF	F6	ALUM.	FF	DH06	DJ06	DS01		CR03-1	X	X	X	X	X	
EX-I002	ELECTRICAL ROOM	I 001a	EXTERIOR	-	79 1/2" x 104"	1 1/2"	B	FRP	FF	F6	ALUM.	FF	DH06	DJ06	DS01		CR03	X	X	X	X	X	
EX-I003	SECURE VESTIBULE	I V004	EXTERIOR	-	79 1/2" x 104"		D	ALUM./ GL	FF	F6	ALUM.	FF	DH01	DJ01	DS01		CR04	X	X		X	X	ELECTRIFIED HARDWARE
EX-I005	S.T.E.A.M. LAB	I 008	EXTERIOR	-	44" x 104"		C	ALUM./ GL	FF	F6	ALUM.	FF	DH01	DJ01	DS01		CR03-1	X	X		X	X	
EX-I006	CULINARY ARTS KITCHEN	I 006	EXTERIOR	-	44" x 104"		C	ALUM./ GL	FF	F6	ALUM.	FF	DH01	DJ01	DS01		CR03-1	X	X		X	X	
EX-I007	CULINARY ARTS CAFE	I 004	EXTERIOR	-	44" x 104"		C	ALUM./ GL	FF	F6	ALUM.	FF	DH01	DJ01	DS01		CR03-1	X	X		X	X	
EX-I008	STUDY HALL/ PRESENTATION SPACE	I 002	EXTERIOR	-	44" x 104"		C	ALUM./ GL	FF	F6	ALUM.	FF	DH01	DJ01	DS01		CR03-1	X	X		X	X	
EX-V001	VESTIBULE	I V001	EXTERIOR	-	84 1/2" x 107"		D	ALUM./ GL	FF	F6	ALUM.	FF	DH01	DJ01	DS01		CR04	X	X		X	X	ELECTRIFIED HARDWARE
EX-V002	VESTIBULE	I V002	EXTERIOR	-	84 1/2" x 107"		D	ALUM./ GL	FF	F6	ALUM.	FF	DH03	DJ03	DS05		CR04-1	X	X		X	X	ELECTRIFIED HARDWARE
EX-V003	VESTIBULE	V-003	EXTERIOR	-	79 1/2" x 104"		D	ALUM./ GL	FF	F6	ALUM.	FF	DH01	DJ01	DS01		CR04	X	X		X	X	ELECTRIFIED HARDWARE
I001	CORRIDOR	I C004	ELECTRICAL ROOM	I 001a	36" x 84"	1 1/2"	A	WD	FF	F1	HM	FF	DH02	DJ02		90 MIN.	CR01-5	X	X	X		X	
I002	CORRIDOR	I C001	STUDY HALL/ PRESENTATION SPACE	I 002	36" x 84"	1 1/2"	E	WD	FF	F1	HM	FF	DH02	DJ02			CR01-1	X	X	X			
I002-A	STUDY HALL/ PRESENTATION SPACE	I 002	PRESENTATION CLOSET	I 002a	36" x 84"	1 1/2"	A	WD	FF	F1	HM	FF	DH02	DJ02			CR01-2	X	X				
I002-B	PRESENTATION CLOSET II	I 013n	STUDY HALL/ PRESENTATION SPACE	I 002	36" x 84"	1 1/2"	A	WD	FF	F1	HM	FF	DH02	DJ02			CR01-2	X	X				
I002-C	CORRIDOR	I C001	STUDY HALL/ PRESENTATION SPACE	I 002	36" x 84"	1 1/2"	E	WD	FF	F1	HM	FF	DH02	DJ02			CR01-1	X	X	X			
I006	CORRIDOR	I C001	CULINARY ARTS KITCHEN	I 006	36" x 84"	1 1/2"	E	WD	FF	F1	HM	FF	DH02	DJ02			CR01-4	X	X	X			
I006-A	CULINARY ARTS KITCHEN	I 006	CULINARY ARTS CAFE	I 004	44 1/16" x 126 1/2"			ALUM./ GL	FF		ALUM.	FF					CR06	X	X	X			
I006-B	CULINARY ARTS KITCHEN	I 006	CULINARY ARTS CAFE	I 004	44 1/16" x 126 1/2"			ALUM./ GL	FF		ALUM.	FF					CR06	X	X	X			
I006-C	CULINARY ARTS KITCHEN	I 006	DRY ST.	I 006b	36" x 84"	1 1/2"	A	ALUM./ GL	FF	F1	HM	FF	DH02	DJ02			CR01-2	X	X	X			
I007	CORRIDOR	I C001	STUDENT ART GALLERY	I 007	72" x 126 1/2"			ALUM./ GL	FF		ALUM.	FF					CR06-1						
I008	CORRIDOR	I C002	S.T.E.A.M. LAB	I 008	36" x 84"	1 1/2"	A	WD	FF	F1	HM	FF	DH02	DJ02			CR01	X	X	X			
I008-A	CORRIDOR	I C001	S.T.E.A.M. LAB	I 008	36" x 84"	1 1/2"	E	WD	FF	F1	HM	FF	DH02	DJ02			CR01	X	X	X			
I008-B	S.T.E.A.M. LAB	I 008	STORAGE	I 008b	36" x 84"	1 1/2"	A	WD	FF	F1	HM	FF	DH02	DJ02			CR01	X	X	X			
I008-C	STAIR B	I SB	SECURITY OFFICE	I 008c	36" x 84"	1 1/2"	A	WD	FF	F1	HM	FF	DH02	DJ02			CR01	X	X	X			
I009	CORRIDOR	I C002	STUDY HALL/ STUDENT WORK SPACE	I 009	36 9/16" x 126 1/2"			ALUM./ GL	FF		ALUM.	FF					CR01						
I011	CORRIDOR	I C006	SECURITY OFFICE	I 011	36" x 84"	1 1/2"	E	WD	FF	F1	HM	FF	DH02	DJ02			CR01	X	X	X			
I011-A	CORRIDOR	I C004	TOILET	I 011a	36" x 84"	1 1/2"	A	WD	FF	F1	HM	FF	DH05	DJ05			CR01-3	X	X	X			
I011-B	CORRIDOR	I C004	TOILET	I 011b	36" x 84"	1 1/2"	A	WD	FF	F1	HM	FF	DH05	DJ05			CR01-3	X	X	X			
I012	CORRIDOR	I C004	TEACHER'S CONF. RM.	I 012	36" x 84"	1 1/2"	E	WD	FF	F1	HM	FF	DH02	DJ02			CR01	X	X	X			
I012-A	STORAGE	I 013a	TEACHER'S CONF. RM.	I 012	(2) 24" x 80"	1 1/2"	B	WD	FF	F2	HM	FF	DH02	DJ02									
I013	CORRIDOR	I C004	CLASSROOM	I 013	36" x 84"	1 1/2"	E	WD	FF	F1	HM	FF	DH02	DJ02			CR01	X	X	X			
I013-A	CLASSROOM	I 013	I.T. CLOSET	I 013b	36" x 84"	1 1/2"	A	WD	FF	F1	HM	FF	DH02	DJ02			CR01-2	X	X	X			
I013-H	CORRIDOR	I C001	TOILET	I 013i	36" x 84"	1 1/2"	A	WD	FF	F1	HM	FF	DH05	DJ05			CR01-3	X	X	X			
I013-I	CORRIDOR	I C001	TOILET	I 013h	36" x 84"	1 1/2"	A	WD	FF	F1	HM	FF	DH05	DJ05			CR01-3	X	X	X			
I013-J	CORRIDOR	I C001	J.C.	I 013k	36" x 84"	1 1/2"	A	WD	FF	F1	HM	FF	DH05	DJ05			CR01-3	X	X	X			
I013-K	TOILET	I 013j	CORRIDOR	I C001	36" x 84"	1 1/2"	A	WD	FF	F1	HM	FF	DH05	DJ05			CR01-3	X	X	X			
I014	CORRIDOR	I C004	CLASSROOM	I 014	36" x 84"	1 1/2"	A	WD	FF	F1	HM	FF	DH02	DJ02			CR01	X	X	X			
I015	CLASSROOM	I 015	CORRIDOR	I C004	36" x 84"	1 1/2"	A	WD	FF	F1	HM	FF	DH02	DJ02			CR01	X	X	X			
I016	CORRIDOR	I C004	HALLWAY	I 016d	36" x 84"	1 1/2"	E	WD	FF	F1	HM	FF	DH02	DJ02			CR01	X	X	X			
I016-A	HALLWAY	I 016d	UNION OFFICE	I 016a	36" x 84"	1 1/2"	E	WD	FF	F1	HM	FF	DH02	DJ02			CR01	X	X	X			
I016-B	HALLWAY	I 016d	UNION OFFICE	I 016b	36" x 84"	1 1/2"	E	WD	FF	F1	HM	FF	DH02	DJ02			CR01	X	X	X			
I016-C	STORAGE	I 016c	HALLWAY	I 016d	36" x 84"	1 1/2"	A	WD	FF	F1	HM	FF	DH02	DJ02			CR01-1	X		X			
I017	CORRIDOR	I C001	SP. ED. LIFE SKILLS APARTMENT 15:1:1	I 017	36" x 84"	1 1/2"	E	WD	FF	F1	HM	FF	DH02	DJ02			CR01	X	X	X			
I017-A	SP. ED. LIFE SKILLS APARTMENT 15:1:1	I 017	TRAINING BEDROOM	I 017a	36" x 84"	1 1/2"	E	WD	FF	F1	HM	FF	DH02	DJ02			CR01-2	X	X	X			
I017-E	ST.	I 017b	SP. ED. LIFE SKILLS APARTMENT 15:1:1	I 017	30" x 84"	1 1/2"	A	WD	FF	F1	HM	FF	DH02	DJ02			CR01-2	X					
I019	CORRIDOR	I C006	SP. ED. WORK/ JOB LAB (PAES) 6:1:1	I 019	36" x 84"	1 1/2"	A	WD	FF	F1	HM	FF	DH02	DJ02			CR01	X	X	X			
I020	CORRIDOR	I C006	SP. ED. WORK/ JOB LAB (PAES) 15:1:1	I 020	36" x 84"	1 1/2"	A	WD	FF	F1	HM	FF	DH02	DJ02			CR01	X	X	X			
I020-B	TRAINING BEDROOM	I 017a	ST.	I 017b	(2) 32" x 80"	1 1/2"	B	WD	FF	F2	HM	FF	DH02	DJ02			02	X					
I020-C	TOILET VEST.	I 017d	TOILET	I 017c	36" x 84"	1 1/2"	A	WD	FF	F1	HM	FF	DH02	DJ02			01	X	X	X			
I020-D	TOILET VEST.	I 017d	SP. ED. LIFE SKILLS APARTMENT 15:1:1	I 017	36" x 84"	1 1/2"	E	WD	FF	F1	HM	FF	DH02	DJ02			CR01-2	X	X	X			
I021	SP. ED. WORK/ JOB LAB (PAES) 15:1:1	I 021	CORRIDOR	I C006	36" x 84"	1 1/2"	A	WD	FF	F1	HM	FF	DH02	DJ02			CR01	X	X	X			
I022	STORAGE	I C007	CORRIDOR	I C006	36" x 84"	1 1/2"	A	WD	FF	F1	HM	FF	DH02	DJ02			CR01-2	X	X	X			
I023	CORRIDOR	I C006	LOBBY	I L001	36" x 89 1/4"	1 3/4"	A	WD	FF	F7	GA	FF	DH09	DJ09		45 MIN.	CR07	X	X			X	
L001	VESTIBULE	I V002	LOBBY	I L001	80" x 107"		D	ALUM./ GL	FF			FF	DH03	DJ03	DS05		CR04-2	X	X				ELECTRIFIED HARDWARE
A107	STUDENT ENTERPRISE	EX107	CORRIDOR	EX107a	36" x 84"	1 1/2"	E	WD	FF	F1	HM	FF	DH02	DJ02			CR01-1	X	X	X			
C103	CORRIDOR	EX107a	BRIDGE I	I B000	(2) 36" x 84"	1 1/2"	F	WD	FF	F2	HM	FF	DH08	DJ08		90 MIN.	04	X	X			X	ELECTRIFIED HARDWARE
C101	CORRIDOR	I C101	STAIR A	I SA	(2) 36" x 84"	1 1/2"	B	WD	FF	F2	HM	FF	DH02	DJ02		45 MIN.	CR05	X	X	X		X	ELECTRIFIED HARDWARE
C101-A	CORRIDOR	I C103	CORRIDOR	I C102	(2) 36" x 84"	1 1/2"	F	WD	FF	F5	HM	FF	DH04	DJ02		45 MIN.	CR05	X	X			X	ELECTRIFIED HARDWARE
C101-B	ELEC. CT.	I C101a	CORRIDOR	I C101	(2) 30" x 84"	1 1/2"	B	WD	FF	F2	HM	FF	DH02	DJ02			CR02	X		X			
C103-A	ELEC. CT.	I C102a	CORRIDOR	I C103	(2) 36" x 84"	1 1/2"	B	WD	FF	F2	HM	FF	DH02	DJ02			CR02	X		X			
C104-A	CORRIDOR	I C104	CORRIDOR	I C104A	(2) 36" x 84"	1 1/2"	F	WD	FF	F5	HM	FF	DH04	DJ02			04	X	X			X	ELECTRIFIED HARDWARE
C105-A	CORRIDOR	I C105A	CORRIDOR	I C105	(2) 36" x 84"	1 1/2"	F	WD	FF	F5	HM	FF	DH04	DJ02			04	X	X			X	ELECTRIFIED HARDWARE
I013-C	CORRIDOR	I C105	TOILET	I 013c	36" x 84"	1 1/2"	A	WD	FF	F1	HM	FF	DH05	DJ05			CR01-3	X	X	X			
I013-D	TOILET	I 013d	CORRIDOR	I C105	36" x 84"	1 1/2"	A	WD	FF	F1	HM	FF	DH05	DJ05			CR01-3	X	X	X			
I013-E	CORRIDOR	I C105	J.C.	I 013e	36" x 84"	1 1/2"	A	WD	FF	F1	HM	FF	DH05	DJ05			CR01-1	X	X	X			
I013-G	TOILET	I 013g	CORRIDOR	I C105	36" x 84"	1 1/2"	A	WD	FF	F1	HM	FF	DH05	DJ05			CR01-3	X	X	X			
I100-A	SP. ED. WORK EXPERIENCE (WE) 15:1:1	I 100	STORAGE	I 100a	36" x 84"	1 1/2"	A	WD	FF	F1	HM	FF	DH02	DJ02			CR01-3	X	X	X			
I102	CORRIDOR	I C101	METAL WORK JEWELERY & SCULPTING ROOM	I 102	36" x 84"	1 1/2"	E	WD	FF	F1	HM	FF	DH02	DJ02			CR01	X	X	X			
I102-A	KILN ROOM	I 102a	CERAMICS ROOM	I 104	36" x 84"	1 1/2"	E	WD	FF	F1	HM	FF	DH02	DJ02			CR01	X	X	X			
I102-A	KILN ROOM	I 102a	METAL WORK JEWELERY & SCULPTING ROOM	I 102	36" x 84"	1 1/2"	E	WD	FF	F1	HM	FF	DH02	DJ02			CR01	X	X	X			
I102-B	STORAGE	I 102b	METAL WORK JEWELERY & SCULPTING ROOM	I 102	36" x 84"	1 1/2"	A	WD	FF	F1	HM	FF	DH02	DJ02			CR01-1	X	X	X			
I104	CORRIDOR	I C101	CERAMICS ROOM	I 104	36" x 84"	1 1/2"	E	WD	FF	F1	HM	FF	DH02	DJ02			CR01	X	X	X			
I104-A	STORAGE	I 104a	CERAMICS ROOM	I 104	36" x 84"	1 1/2"	A	WD	FF	F1	HM	FF	DH02	DJ02			CR01	X	X	X			
I105	CORRIDOR	I C104	ART FAC. WORK ROOM	I 105	36" x 84"	1 1/2"	E	WD	FF	F1	HM	FF	DH04	DJ02			CR01	X	X	X			
I105-B	ART FAC. WORK ROOM	I 105	OFFICE	I 105b	36" x 84"	1 1/2"	E	WD	FF	F1	HM	FF	DH02	DJ02			CR01	X	X	X			
I105-C	OFFICE	I 105b	ST.	I 105c	36" x 84"	1 1/2"	A	WD	FF	F1	HM	FF	DH02	DJ02			CR01	X		X			
I105-D	E.C.	I 105d	CORRIDOR	I C104	32" x 84"	1 1/2"	A	WD	FF	F1	HM	FF	DH02	DJ02			CR01-1	X		X			
I106	CORRIDOR	I C101	SP. ED. WORK EXPERIENCE (WE) 15:1:1	I 100	36" x 84"	1 1/2"	E	WD	FF	F1	HM	FF	DH02	DJ02			CR01	X	X	X			
I106	CORRIDOR	I C104A	ART STUDIO ROOM 3	I 106	36" x 84"	1 1/2"	E	WD	FF	F1	HM	FF	DH02	DJ02			CR01	X	X	X			
I106-A	ART STUDIO ROOM 3	I 106	ST.	I 106a	36" x 84"	1 1/2"	A	WD	FF	F1	HM	FF	DH02	DJ02			CR01-3	X	X	X			
I107-A	ST.	I 105a	ART FAC. WORK ROOM	I 105	36" x 84"	1 1/2"	A	WD	FF	F1	HM	FF	DH02	DJ02			CR01-2	X	X	X			
I108	CORRIDOR	I C103	FASHION DESIGN ROOM	I 108	36" x 84"	1 1/2"	E	WD	FF	F1	HM	FF	DH02	DJ02			CR01	X	X	X			
I108-B	FASHION DESIGN ROOM	I 108	ST.	I 108b	36" x 84"	1 1/2"	A	WD	FF	F1	HM	FF	DH02	DJ02			CR01	X	X	X			
I110	CORRIDOR	I C103	ART STUDIO ROOM 2	I 112	36" x 84"	1 1/2"	E	WD	FF	F1	HM	FF	DH02	DJ02			CR01	X	X	X			
I110-B	ART STUDIO ROOM 2	I 112	ST.	I 110a	36" x 84"	1 1/2"	A	WD	FF	F1	HM	FF	DH02	DJ02			CR01-4	X	X	X			
I110-C	FASHION DESIGN ROOM	I 108	ART STUDIO ROOM 2	I 112	36" x 84"	1 1/2"	A	WD	FF	F1	HM	FF	DH02	DJ02			CR01	X	X	X			
I112	CORRIDOR	I C103	ART STUDIO ROOM 1	I 110	36" x 84"	1 1/2"	E	WD	FF	F1	HM	FF	DH02	DJ02			CR01	X	X	X			
I112-A	ART STUDIO ROOM 1	I 110	ST.	I 110a	36" x 84"	1 1/2"	A	WD	FF	F1	HM	FF	DH02	DJ02			CR01-4	X	X	X			
I112-B	ART STUDIO ROOM 2	I 112	ART STUDIO ROOM 1	I 110	36" x 84"	1 1/2"	A	WD	FF	F1	HM	FF	DH02	DJ02			CR01	X	X	X			
I114	GRAPHIC/DIGI. ARTS LAB	I 114	CORRIDOR	I C104A	36" x 84"	1 1/2"	E	WD	FF	F1	HM	FF	DH02	DJ02			CR01	X	X	X			
I116	PHOTOGRAPHY ROOM	I 116	CORRIDOR	I C104A	36" x 84"	1 1/2"	E	WD	FF	F1	HM	FF	DH02	DJ02			CR01	X	X	X			
I116-A	PHOTOGRAPHY ROOM	I 116	GRAPHIC/DIGI. ARTS LAB	I 114	36" x 84"	1 1/2"	A	WD	FF	F1	HM	FF	DH02	DJ02			CR01-1	X	X	X			
I116-B	PHOTOGRAPHY ROOM	I 116	ST.	I 116b	36" x 84"	1 1/2"	A	WD	FF	F1	HM	FF	DH02	DJ02			CR01-1	X		X			
I116-C	ST.	I 116c	DARK ROOM	I 116a	36" x 84"	1 1/2"	A	WD	FF	F1	HM	FF	DH02	DJ02			CR01-1	X		X			
I116-D	ST.	I 116d	DARK ROOM	I 116a	36" x 84"	1 1/2"	A	WD	FF	F1	HM	FF	DH02	DJ02			CR01-1	X		X			
I116-E	CORRIDOR	I C101	DARK ROOM	I 116a	36" x 84"	1 1/2"	A	WD	FF	F1	HM	FF	DH02	DJ02			CR01	X	X	X			
I118	SP. ED. WORK EXPERIENCE (WE)	I 117	CORRIDOR	I C101	36" x 84"	1 1/2"	E	WD	FF	F1	HM	FF	DH02	DJ02			CR01-4	X	X	X			

GENERAL DOOR NOTES

1. ALL DOOR FRAMES TO BE SET 4" FROM FINISHED WALL SURFACE UNLESS DIMENSIONED OR NOTED OTHERWISE.
2. ALL DOORS IN FIRE RATED PARTITIONS ARE TO BE SELF CLOSING.
3. ALL INTERIOR TOILET ROOM DOORS SHALL HAVE A 3/4" UNDERCUT. UNDERCUT SHALL BE MEASURED FROM THE TOP OF SADDLE. CONTRACTOR TO VERIFY IN FIELD AND COORDINATE WITH FINISHES.
4. ALL METAL DOORS TO BE ALLEGION STEELCRAFT WITH GRAINTECH FACTORY FINISH. WOOD DOORS TO BE STAINED WITH POLYURETHANE CLEAR FINISH TO MATCH METAL DOORS. ALL COLORS TO BE APPROVED BY OWNER/ ARCHITECT.
5. SEE SPECIFICATIONS FOR HARDWARE SETS.

DOOR ABBREVIATIONS

HM = HOLLOW METAL
ALUM = ALUMINUM
FF = FACTORY FINISH
WD = WOOD
GA = GALVANNEAL
GL = GLASS

C:\Users\ddesouza\Documents\WPSD2203_Central21_A_DDeSouzaD8TU8.rvt
3/20/2025 3:14:54 PM

H2M architects + engineers
538 Broad Hollow Road, 4th Floor East
Melville, NY 11747
631.756.8000 ▪ www.h2m.com
Architecture & Landscape Architecture: No Certificate Required
Engineering Certificate of Authorization No.: 0018178

CONSULTANTS:

MARK	DATE	DESCRIPTION
2	01-10-2025	SED ADDENDUM 2

REGISTERED ARCHITECT · KEVIN MICHAEL MEDLER · STATE OF NEW YORK · 038379

07/31/2024
Exp. Date

KEVIN M. MEDLER, R.A.
NY PROFESSIONAL ARCHITECT Lic. No. 038379
"ALTERATION OF THIS DOCUMENT EXCEPT BY A LICENSED PROFESSIONAL IS ILLEGAL"

DESIGNED BY:	DRAWN BY:	CHECKED BY:	REVIEWED BY:
CWP	DOD/NPO	CWP/KMM	0

PROJECT No:	DATE:	SCALE:
WPSD 2203	MARCH 2025	AS SHOWN

CLIENT
WHITE PLAINS CITY SCHOOL DISTRICT

ADDITION AT WHITE PLAINS HIGH SCHOOL

550 NORTH STREET, WHITE PLAINS, NY 10605

66-22-00-01-0-016-030

CONTRACT
CONTRACT G
GENERAL CONSTRUCTION

STATUS
FINAL BID SET

SHEET TITLE
DOOR SCHEDULE

DRAWING No.
A 620.00

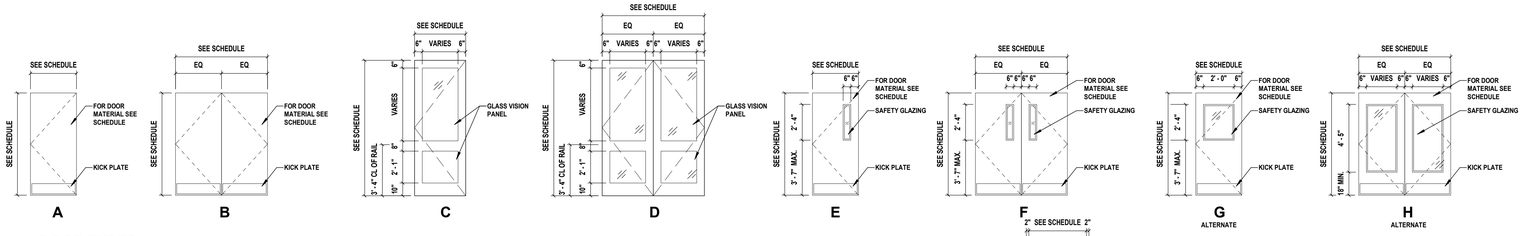

A B C D E F G H

DOOR TYPES

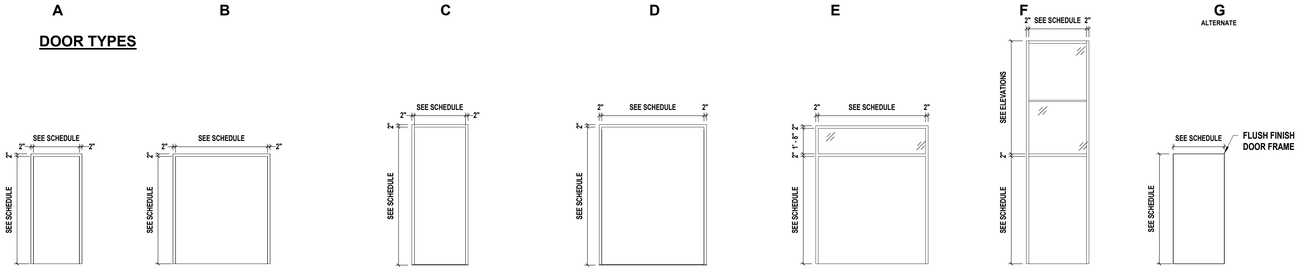

F1 F2 F3 F4 F5 F6 F7

FRAME TYPES

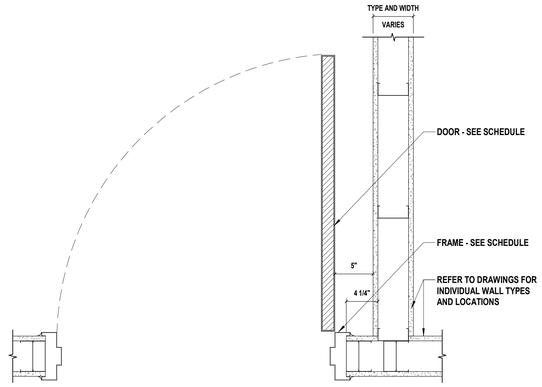

1 Typical Door Offset Detail
SCALE: 1 1/2" = 1'-0"

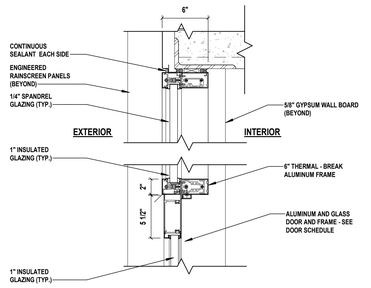

DH01 Exterior Door Head
SCALE: 1 1/2" = 1'-0"

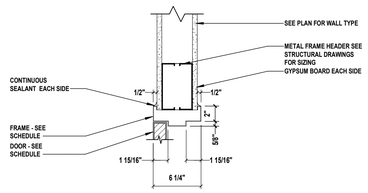

DH02 Door Head Detail
SCALE: 1 1/2" = 1'-0"

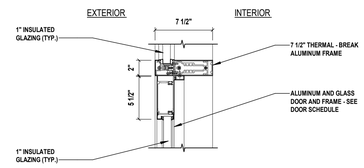

DH03 Exterior Door Head Detail
SCALE: 1 1/2" = 1'-0"

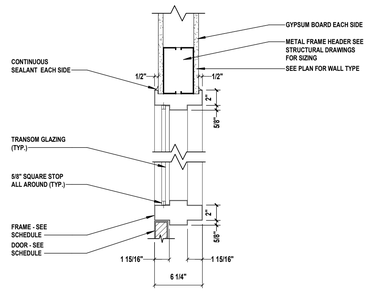

DH04 Door Head
SCALE: 1 1/2" = 1'-0"
H2M Ref # DH06-131

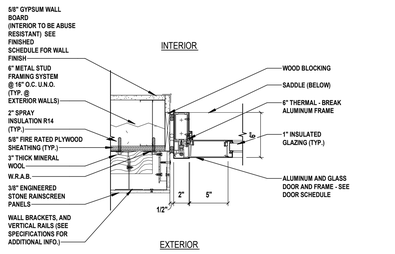

DJ01 Exterior Door Jamb Detail
SCALE: 1 1/2" = 1'-0"

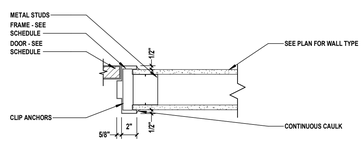

DJ05 Door Jamb Detail
SCALE: 1 1/2" = 1'-0"

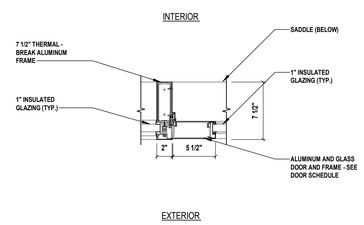

DJ03 Exterior Door Jamb Detail
SCALE: 1 1/2" = 1'-0"

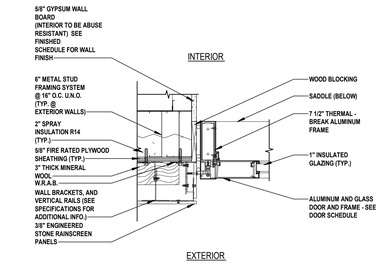

DJ04 Exterior Door Jamb Detail
SCALE: 1 1/2" = 1'-0"

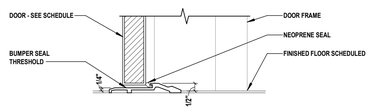

DS01 Saddle Detail
SCALE: 3" = 1'-0"

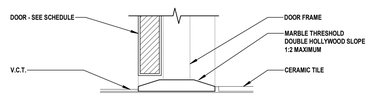

DS02 Saddle Detail
SCALE: 3" = 1'-0"

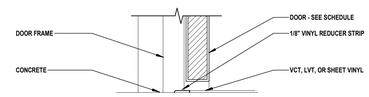

DS03 Saddle Detail
SCALE: 3" = 1'-0"

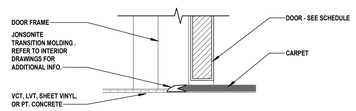

DS04 Saddle Detail
SCALE: 3" = 1'-0"

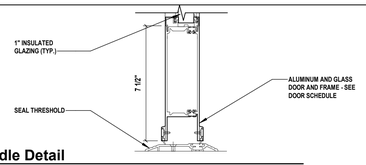

DS05 Saddle Detail
SCALE: 3" = 1'-0"

H2M architects + engineers
538 Broad Hollow Road, 4th Floor East
Melville, NY 11747
631.756.8000 • www.h2m.com
Architecture & Landscape Architecture: No Certificate Required
Engineering Certificate of Authorization No.: 0018178

CONSULTANTS:

MARK	DATE	DESCRIPTION
2	01-10-2025	SED ADDENDUM 2

REGISTERED ARCHITECT KEVIN MICHAEL MEDLER 038379 STATE OF NEW YORK

KEVIN M. MEDLER, R.A.
NY PROFESSIONAL ARCHITECT Lic. No. 038379
THE TRANSMITTAL OF THIS DOCUMENT DOES NOT IN A LICENSED PROFESSIONAL IN A LICENSE.
ST010924 Exp. Date

DESIGNED BY:	DRAWN BY:	CHECKED BY:	REVIEWED BY:
CWP	DOD/NPO	Checker	

PROJECT No:	DATE:	SCALE:
WPSD 2203	MARCH 2025	AS SHOWN

CLIENT
WHITE PLAINS CITY SCHOOL DISTRICT

ADDITION AT WHITE PLAINS HIGH SCHOOL

550 NORTH STREET, WHITE PLAINS, NY 10605

66-22-00-01-0-016-030

CONTRACT
CONTRACT G
GENERAL CONSTRUCTION

STATUS
FINAL BID SET

SHEET TITLE
DOOR NOTES, AND DETAILS

DRAWING No.
A 621.00

C:\Users\ddesouza\Documents\WPSD2203_Cente21_A_DDoSouzaDBTLB.rvt
3/6/2025 2:51:40 PM

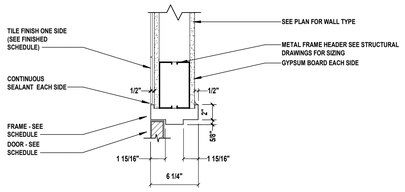

DH05 Door Head
SCALE: 1 1/2" = 1'-0"

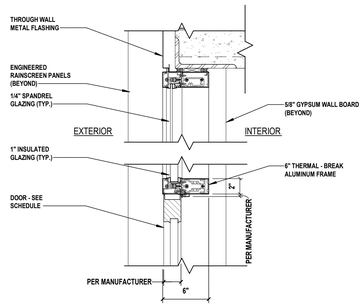

DH06 Exterior Door Head
SCALE: 1 1/2" = 1'-0"

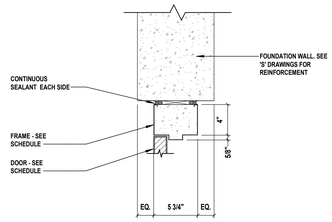

DH07 Door Head
SCALE: 1 1/2" = 1'-0"

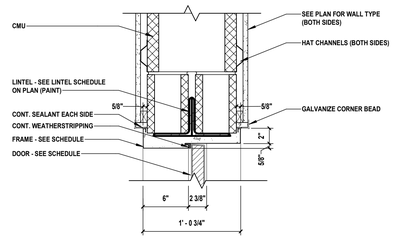

DH08 Door Head
SCALE: 1 1/2" = 1'-0"

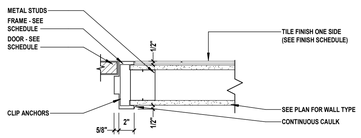

DJ05 Door Jamb
SCALE: 1 1/2" = 1'-0"

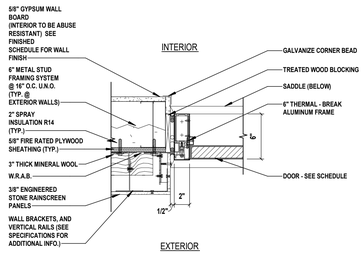

DJ06 Exterior Door Jamb
SCALE: 1 1/2" = 1'-0"

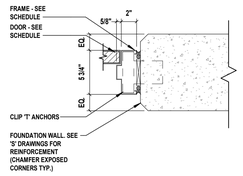

DJ07 Door Jamb
SCALE: 1 1/2" = 1'-0"

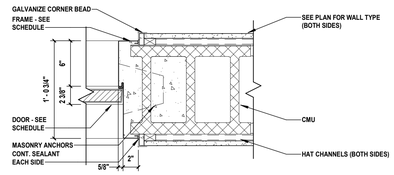

DJ08 Door Jamb
SCALE: 1 1/2" = 1'-0"

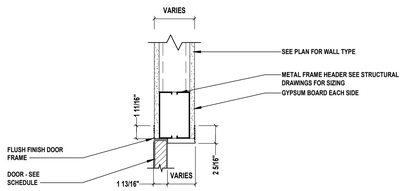

DH09 Door Head
SCALE: 1 1/2" = 1'-0"

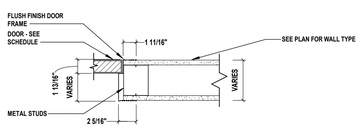

DJ09 Door Jamb
SCALE: 1 1/2" = 1'-0"

H2M architects + engineers
538 Broad Hollow Road, 4th Floor East
Melville, NY 11747
631.756.8000 • www.h2m.com
Architecture & Landscape Architecture: No Certificate Required
Engineering Certificate of Authorization No.: 0018178

CONSULTANTS:

MARK	DATE	DESCRIPTION
2	01-10-2025	SED ADDENDUM 2

KEVIN M. MEDLER, R.A.
NY PROFESSIONAL ARCHITECT Lic. No. 036379

DESIGNED BY:	DRAWN BY:	CHECKED BY:	REVIEWED BY:
CWP	DOD/NPO	Checker	
PROJECT No: WPSD 2203	DATE: MARCH 2025	SCALE: AS SHOWN	

CLIENT
WHITE PLAINS CITY SCHOOL DISTRICT

ADDITION AT WHITE PLAINS HIGH SCHOOL

550 NORTH STREET, WHITE PLAINS, NY 10605

66-22-00-01-0-016-030

CONTRACT
CONTRACT G
GENERAL CONSTRUCTION

STATUS
FINAL BID SET

SHEET TITLE
DOOR NOTES, AND DETAILS

DRAWING No.
A 622.00

C:\Users\ddesouza\Documents\WPSD2203_Central\21_A_DOoSouzaDRT18.rvt

3/6/2025 2:51:51 PM

FLOOR FINISHES LEGEND

	LVT-1 (LUXURY VINYL TILE)
	LVT-2 (LUXURY VINYL TILE)
	LVT-3 (LUXURY VINYL TILE)
	LVT-4 (LUXURY VINYL TILE)
	LVT-5 (LUXURY VINYL TILE)
	SDVT-1 (STATIC DISSIPATIVE VINYL TILE)
	HPCV (HIGH PERFORMANCE CUSHIONED VINYL)
	SRU-1 (SEAMLESS RESILIENT URETHANE)
	SRU-2 (SEAMLESS RESILIENT URETHANE)
	PCT-1/PCT-2 (PORCELAIN TILE)
	CPT-1 (CARPET TILE)
	CPT-2 (CARPET TILE)
	CPT-3 (CARPET TILE)
	FIN-CONC (FINISHED CONCRETE)
	EXP-CONC (EXPOSED CONCRETE)
	EPY (EPOXY COATING)

1 **Ground Floor Finished Plan**
SCALE: 1/8" = 1'-0"

FINISH NOTES

1. THIS SCHEDULE SERVES AS A GENERAL LIST OF FINISH ITEMS AND IS NOT A LIST OF ALL FINISH ITEMS WITHIN A ROOM OR SPACE, REFER TO ALL CONTRACT DOCUMENTS DRAWINGS AND SPECIFICATIONS TO DETERMINE ALL REQUIRED FINISHES AND FINISH ITEMS.
2. CONTRACTOR IS REQUIRED TO FURNISH AND INSTALL ALL FINISHES AS INDICATED IN ACCORDANCE WITH MANUFACTURER'S INSTRUCTIONS AND RECOMMENDATION.
3. CONTRACTOR IS RESPONSIBLE TO ADEQUATELY PREPARE ALL SURFACES AS REQUIRED FURNISH AND INSTALL ALL FINISHES AS INDICATED.
4. CONTRACTOR IS RESPONSIBLE TO INCLUDE IN BASE BID PRICING ALL SEALANTS, ADHESIVES AND MATERIALS REQUIRED TO PROPERLY COMPLETE THE INSTALLATION OF ALL FINISHES AS INDICATED.
5. ALL PAINTING SHALL BE PERFORMED IN ACCORDANCE WITH THE REQUIREMENTS CONTAINED IN DIVISION 9 OF THE SPECIFICATIONS.

C:\Users\kbeaucat\Documents\WPSD2203_Central\21_A_CDs\Sauzal\3ITLB.rvt

3/6/2025 2:51:57 PM

H2M architects + engineers
538 Broad Hollow Road, 4th Floor East
Melville, NY 11747
631.756.8000 • www.h2m.com
Architecture & Landscape Architecture: No Certificate Required
Engineering Certificate of Authorization No.: 0018178

CONSULTANTS:

MARK	DATE	DESCRIPTION
2	01-10-2025	SED ADDENDUM 2

REGISTERED ARCHITECT KEVIN MICHAEL MEDLER 038379 STATE OF NEW YORK

KEVIN M. MEDLER, R.A.
NY PROFESSIONAL ARCHITECT Lic. No. 038379
THE TRANSFERABILITY AND ACCURACY OF DATA IS LICENSED FOR PERIOD OF 60 DAYS.

ST010924 Exp. Date

DESIGNED BY:	DRAWN BY:	CHECKED BY:	REVIEWED BY:
CWP	DOD/NPO	Checker	
PROJECT No: WPSD 2203	DATE: MARCH 2025	SCALE: AS SHOWN	

CLIENT

WHITE PLAINS CITY SCHOOL DISTRICT

ADDITION AT WHITE PLAINS HIGH SCHOOL

White Plains Public Schools WP REAL LIFE LEARNING

550 NORTH STREET, WHITE PLAINS, NY 10605

66-22-00-01-0-016-030

CONTRACT

CONTRACT G
GENERAL CONSTRUCTION

STATUS

FINAL BID SET

SHEET TITLE

GROUND FLOOR FINISH PLAN, NOTES, AND LEGEND

DRAWING No.

A 700.00

FLOOR FINISHES LEGEND

	LVT-1 (LUXURY VINYL TILE)
	LVT-2 (LUXURY VINYL TILE)
	LVT-3 (LUXURY VINYL TILE)
	LVT-4 (LUXURY VINYL TILE)
	LVT-5 (LUXURY VINYL TILE)
	SDVT-1 (STATIC DISSIPATIVE VINYL TILE)
	HPCV (HIGH PERFORMANCE CUSHIONED VINYL)
	SRU-1 (SEAMLESS RESILIENT URETHANE)
	SRU-2 (SEAMLESS RESILIENT URETHANE)
	PCT-1/PCT-2 (PORCELAIN TILE)
	CPT-1 (CARPET TILE)
	CPT-2 (CARPET TILE)
	CPT-3 (CARPET TILE)
	FIN-CONC (FINISHED CONCRETE)
	EXP-CONC (EXPOSED CONCRETE)
	EPY (EPOXY COATING)

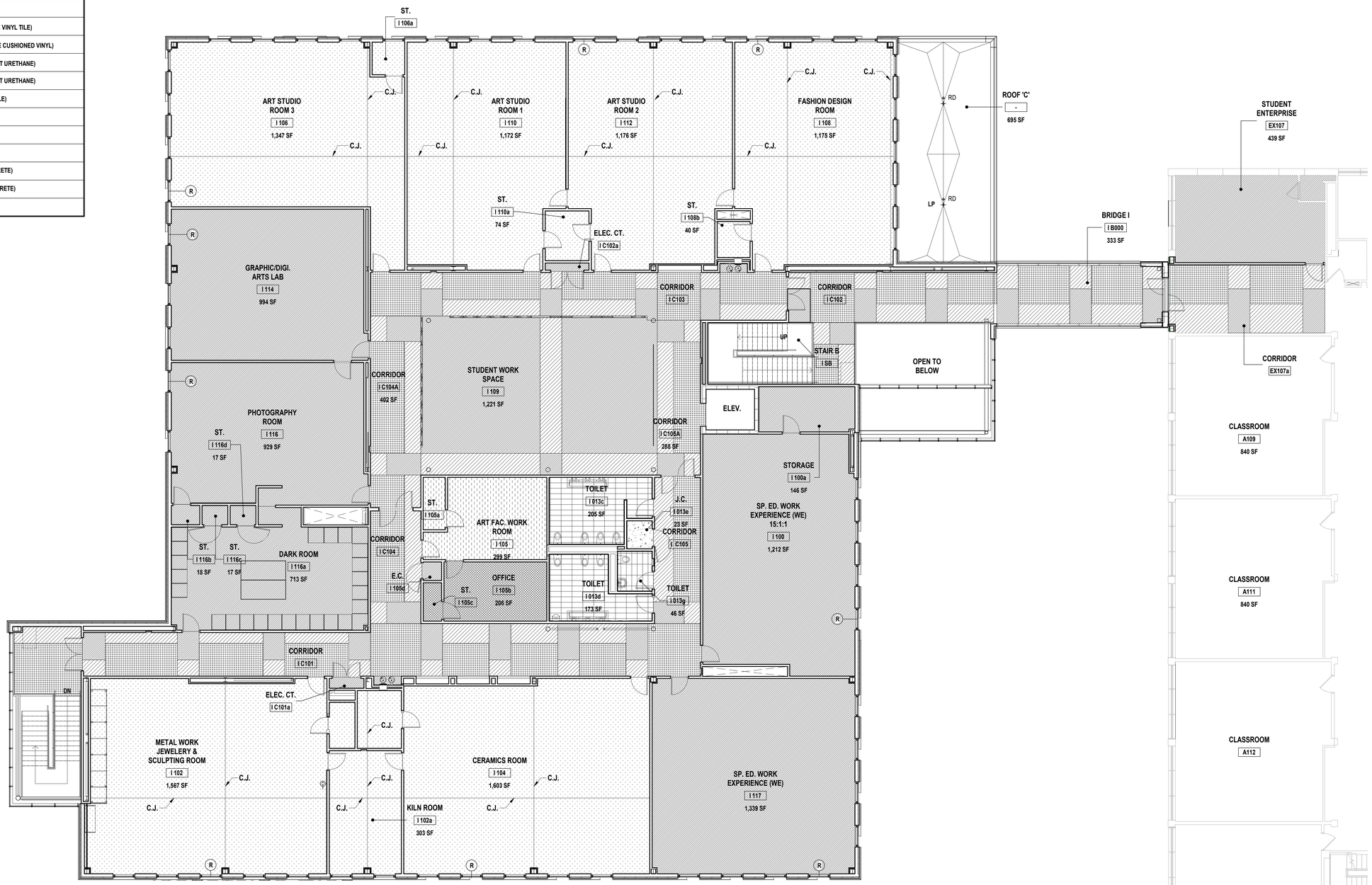

1 **First Floor Finished Plan**
SCALE: 1/8" = 1'-0"

FINISH NOTES

1. THIS SCHEDULE SERVES AS A GENERAL LIST OF FINISH ITEMS AND IS NOT A LIST OF ALL FINISH ITEMS WITHIN A ROOM OR SPACE, REFER TO ALL CONTRACT DOCUMENTS DRAWINGS AND SPECIFICATIONS TO DETERMINE ALL REQUIRED FINISHES AND FINISH ITEMS.
2. CONTRACTOR IS REQUIRED TO FURNISH AND INSTALL ALL FINISHES AS INDICATED IN ACCORDANCE WITH MANUFACTURER'S INSTRUCTIONS AND RECOMMENDATION.
3. CONTRACTOR IS RESPONSIBLE TO ADEQUATELY PREPARE ALL SURFACES AS REQUIRED FURNISH AND INSTALL ALL FINISHES AS INDICATED.
4. CONTRACTOR IS RESPONSIBLE TO INCLUDE IN BASE BID PRICING ALL SEALANTS, ADHESIVES AND MATERIALS REQUIRED TO PROPERLY COMPLETE THE INSTALLATION OF ALL FINISHES AS INDICATED.
5. ALL PAINTING SHALL BE PERFORMED IN ACCORDANCE WITH THE REQUIREMENTS CONTAINED IN DIVISION 9 OF THE SPECIFICATIONS.

C:\Users\kbtesource\Documents\WPSD2203_Cwhw\D1_A_DDnSource\DR718.rvt

3/6/2025 2:52:02 PM

H2M architects + engineers
538 Broad Hollow Road, 4th Floor East
Melville, NY 11747
631.756.8000 • www.h2m.com
Architecture & Landscape Architecture: No Certificate Required
Engineering Certificate of Authorization No.: 0018178

CONSULTANTS:

MARK	DATE	DESCRIPTION
2	01-10-2025	SED ADDENDUM 2

REGISTERED ARCHITECT KEVIN MICHAEL MEDLER 036379 STATE OF NEW YORK
KEVIN M. MEDLER, R.A.
NY PROFESSIONAL ARCHITECT Lic. No. 036379
"ALTERATION OF THIS DOCUMENT VIOLATES THE LAW OF PROFESSIONAL ARCHITECTURE & ENGINEERING"

DESIGNED BY:	DRAWN BY:	CHECKED BY:	REVIEWED BY:
CWP	DOD/NPO	Checker	
PROJECT No: WPSD 2203	DATE: MARCH 2025	SCALE: AS SHOWN	

CLIENT

WHITE PLAINS CITY SCHOOL DISTRICT

ADDITION AT WHITE PLAINS HIGH SCHOOL

550 NORTH STREET, WHITE PLAINS, NY 10605

66-22-00-01-0-016-030

CONTRACT

CONTRACT G
GENERAL CONSTRUCTION

STATUS

FINAL BID SET

SHEET TITLE

FIRST FLOOR FINISH PLAN, NOTES, AND LEGEND

DRAWING No.

A 701.00

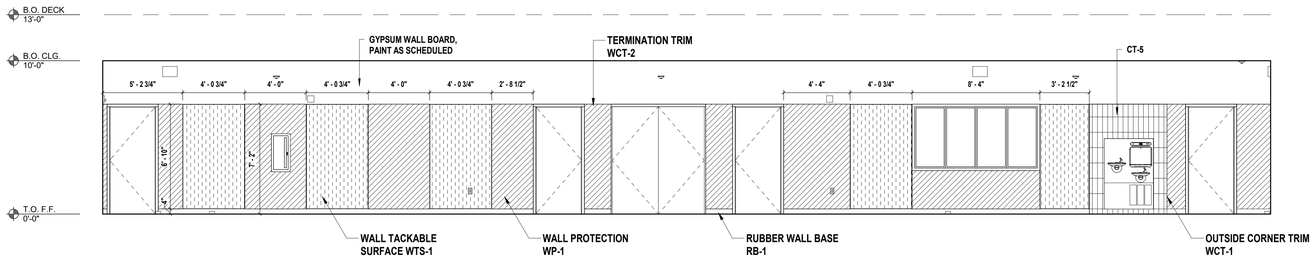

1 **Corridor IC103 Elevation (East)**
SCALE: 1/4" = 1'-0"

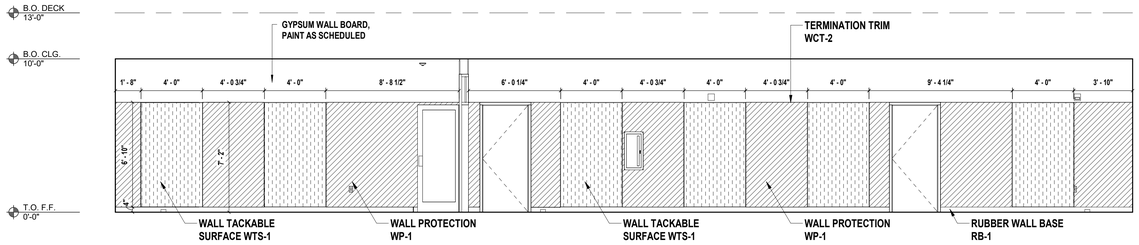

2 **Corridor IC104 / IC104A Elevation (North)**
SCALE: 1/4" = 1'-0"

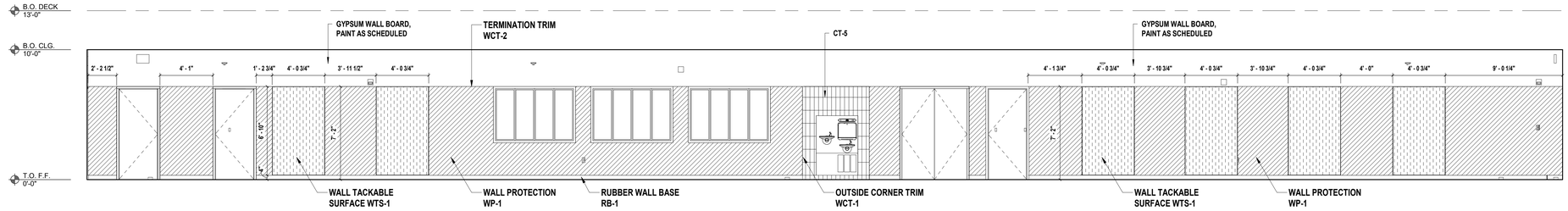

3 **Corridor IC101 Elevation (West)**
SCALE: 1/4" = 1'-0"

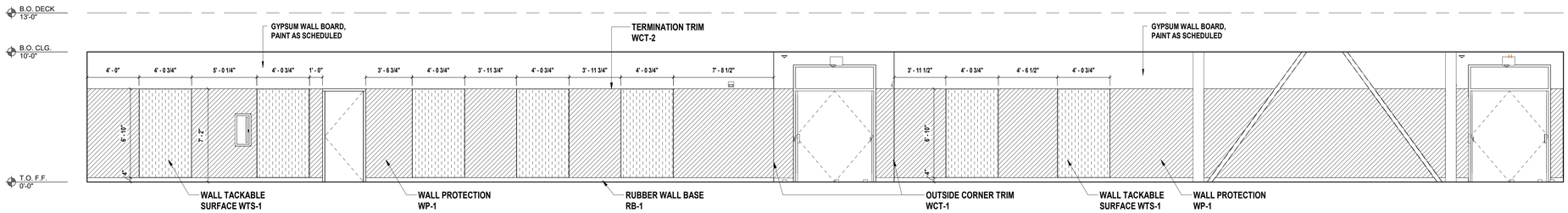

4 **Corridor IC101 Elevation (East)**
SCALE: 1/4" = 1'-0"

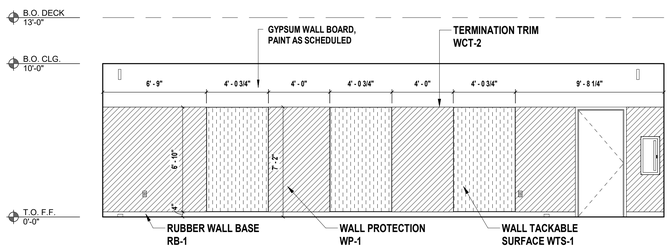

5 **Corridor IC105 Elevation (South)**
SCALE: 1/4" = 1'-0"

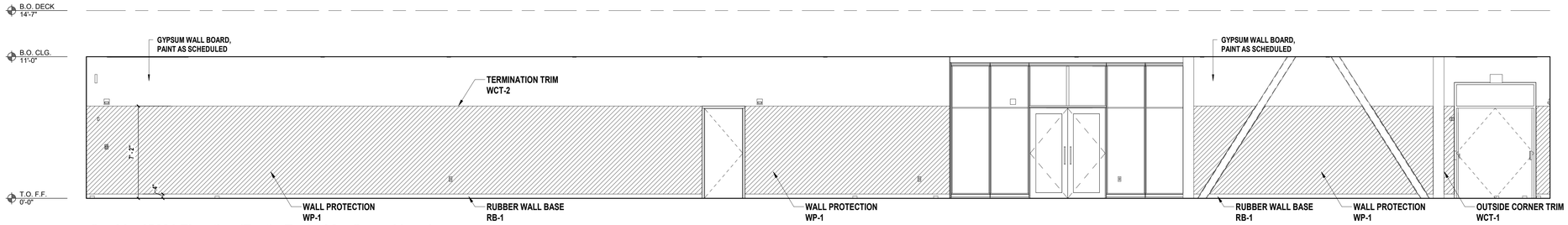

6 **Corridor IC001 Elevation (East) - Typical for Ground Level**
SCALE: 1/4" = 1'-0"

WALL FINISHES LEGEND

	WP-1 (WALL PROTECTION)
	WTS-1 (WALL TACKABLE SURFACE)
	CT-4 (WALL CERAMIC TILE)

H2M architects + engineers
538 Broad Hollow Road, 4th Floor East
Melville, NY 11747
631.756.8000 • www.h2m.com
Architecture & Landscape Architecture: No Certificate Required
Engineering Certificate of Authorization No.: 0018178

CONSULTANTS:

MARK	DATE	DESCRIPTION

REGISTERED ARCHITECT KEVIN MICHAEL MEDLER 038379 STATE OF NEW YORK

KEVIN M. MEDLER, R.A.
NY PROFESSIONAL ARCHITECT Lic. No. 038379

ST010924 Exp. Date

THE TRANSMITTAL OF THIS DOCUMENT DOES NOT IN A LICENSE FROM GENERAL, IN A LICENSE.

DESIGNED BY:	DRAWN BY:	CHECKED BY:	REVIEWED BY:
CWP	DOD/NPO	CWP/KMM	

PROJECT No:	DATE:	SCALE:
WPSD 2203	MARCH 2025	AS SHOWN

CLIENT

WHITE PLAINS CITY SCHOOL DISTRICT

ADDITION AT WHITE PLAINS HIGH SCHOOL

White Plains Public Schools WP REAL LIFE LEARNING

550 NORTH STREET, WHITE PLAINS, NY 10605

66-22-00-01-0-016-030

CONTRACT

CONTRACT G
GENERAL CONSTRUCTION

STATUS

FINAL BID SET

SHEET TITLE

INTERIOR FINISH ELEVATIONS, NOTES, AND LEGEND

DRAWING No.

A 702.00

C:\Users\ddesouza\Documents\WPSD2203_Central\21_A_DOwSouzaDR718.rvt

3/6/2025 2:52:19 PM

FINISH SCHEDULE

ROOM		FLOOR			WALLS								CEILING		
					NORTH		EAST		SOUTH		WEST				
NUMBER	NAME	MATL.	FIN.	BASE	MATL.	FIN.	MATL.	FIN.	MATL.	FIN.	MATL.	FIN.	FIN.	HGT.	COMMENTS
EX107	STUDENT ENTERPRISE	CONC	LVT-2	RB-1/RB-2	GYP	PT-1		PT-2		PT-1		PT-1	ACP-1	9' - 4"	
EX107a	CORRIDOR	CONC	LVT-2/LVT-3/LVT-4	RB-1		PT-1		PT-1				PT-1			
I 000	ELEV.	CONC	LVT-1		CONC		CONC		CONC		CONC				
I 000	ELEVATOR														
I 001a	ELECTRICAL ROOM	CONC	EPY	EPY	GYP	PT-1	GYP	PT-1	GYP	PT-1	GYP	PT-1	EXP	9' - 7"	EPY WALL BASE 8"
I 001b	MECHANICAL ROOM	CONC	EPY	EPY	GYP	PT-1	GYP	PT-1	GYP	PT-1	GYP	PT-1	EXP	9' - 7"	EPY WALL BASE 8"
I 002	STUDY HALL/ PRESENTATION SPACE	CONC	LVT-1 / CPT-1	WDB	GYP	PT-1/SAWP-1/FWPS-1	GYP	PT-1 / AWP-1/FWPS-1	GYP	PT-1 / SAWP-1/FWPS-1	GYP	PT-1/FWPS-1	ACP-4 / GYP	9' - 4"	VARRIES SEE RCP
I 002a	PRESENTATION CLOSET	CONC	LVT-1	RB-1	GYP	PT-1	GYP	PT-1	GYP	PT-1	GYP	PT-1	GYP	9' - 0"	
I 004	CULINARY ARTS CAFE	CONC	LVT-2	RB-1/RB-2	GYP	PT-2	GYP		GYP	F / W	GYP	PT-1	ACB-1	10' - 6 1/2"	
I 006	CULINARY ARTS KITCHEN	CONC	SRU-1/SRU-2	SRU-1	GYP	F / W	GYP	PT-1 / CT-4	GYP	PT-1	GYP	PT-1	ACP-1 / GYP	10' - 6 1/2"	
I 006b	DRY ST.	CONC	SRU-1	SRU-1	GYP	PT-1	GYP	PT-1	GYP	PT-1	GYP	PT-1	ACP-1	10' - 6"	
I 007	STUDENT ART GALLERY	CONC	LVT-5	RB	GYP	PT	GYP	PT	GYP	PT	GYP	PT	ACB-2	11' - 0"	
I 008	S.T.E.A.M. LAB	CONC	LVT-2	RB-1/RB-2	GYP	PT-1	GYP	PT-2	GYP	PT-1	GYP	PT-1	ACB-2	10' - 6 1/2"	
I 008b	STORAGE	CONC	LVT-2	RB-1	GYP	PT-1	GYP	PT-1	GYP	PT-1	GYP	PT-1	ACP-1	10' - 0"	
I 008c	SECURITY OFFICE	CONC	VT-2/LVT-4	RB-1/RB-2	GYP	PT-2	GYP	PT-1	GYP	PT-1	GYP	PT-1	ACP-1	10' - 0"	
I 009	STUDY HALL/ STUDENT WORK SPACE	CONC	LVT-2/LVT-4	RB	GYP	PT-1	GYP	PT-2 / SAWP-2	GYP	PT-1/FWPS	GYP	PT-1	ACB-1	10' - 6"	
I 011	SECURITY OFFICE	CONC	LVT-5	RB-1/RB-2	GYP	PT-2	GYP	PT-1	GYP	PT-1	GYP	PT-1	ACP-1	9' - 6"	
I 011a	TOILET	CONC	PCT-1		GYP	PT-1/ CT-1	GYP	PT-1 / CT-1	GYP	PT-1 / CT-1	GYP	PT-1 / CT-1	ACP-1	9' - 0"	
I 011b	TOILET	CONC	PCT-2		GYP	PT-1 / CT-2	GYP	PT-1 / CT-2	GYP	PT-1 / CT-2	GYP	PT-1/ CT-2	ACP-1	9' - 0"	
I 012	TEACHER'S CONF. RM.	CONC	LVT-1 / CPT-1	RB-1/RB-2	GYP	PT-2	GYP	PT-1	GYP	PT-1	GYP	PT-1	ACP-1	9' - 6"	
I 013	CLASSROOM	CONC	LVT-2	RB-1/RB-2	GYP	PT-2	GYP	PT-1	GYP	PT-1	GYP	PT-1	ACP-1	10' - 0"	
I 013a	STORAGE	CONC	LVT-1	RB-1	GYP	PT-1	GYP	PT-1	GYP	PT-1	GYP	PT-1	ACP-1	8' - 0"	
I 013b	I.T. CLOSET														
I 013c	TOILET	CONC	PCT-2		GYP	PT-1 / CT-2	GYP	PT-1 / CT-2	GYP	PT-1 / CT-2	GYP	PT-1/ CT-2	ACP-1	9' - 0"	
I 013d	TOILET	CONC	PCT-1		GYP	PT-1/ CT-1	GYP	PT-1 / CT-1	GYP	PT-1 / CT-1	GYP	PT-1 / CT-1	ACP-1	9' - 0"	
I 013e	J.C.	CONC	SRU-2	SRU-2	GYP	PT-1	GYP	PT-1	GYP	PT-1	GYP	PT-1			
I 013g	TOILET	CONC	PCT-1		GYP	PT-1/ CT-1	GYP	PT-1 / CT-1	GYP	PT-1 / CT-1	GYP	PT-1 / CT-1	ACP-1	9' - 0"	
I 013h	TOILET	CONC	PCT-2		GYP	PT-1 / CT-2	GYP	PT-1 / CT-2	GYP	PT-1 / CT-2	GYP	PT-1/ CT-2	ACP-1	9' - 0"	
I 013i	TOILET	CONC	PCT-1		GYP	PT-1/ CT-1	GYP	PT-1 / CT-1	GYP	PT-1 / CT-1	GYP	PT-1 / CT-1	ACP-1	9' - 0"	
I 013j	TOILET	CONC	PCT-1		GYP	PT-1/ CT-1	GYP	PT-1 / CT-1	GYP	PT-1 / CT-1	GYP	PT-1 / CT-1	ACP-1	9' - 0"	
I 013k	J.C.	CONC	SRU-2	SRU-2	GYP	PT-1	GYP	PT-1	GYP	PT-1	GYP	PT-1	ACP-1	9' - 0"	
I 013n	PRESENTATION CLOSET II	CONC	LVT-1	RB-1	GYP	PT-1	GYP	PT-1	GYP	PT-1	GYP	PT-1	GYP	9' - 0"	
I 014	CLASSROOM	CONC	LVT-2	RB-1/RB-2	GYP	PT-2	GYP	PT-1	GYP	PT-1	GYP	PT-1	ACP-1	10' - 0"	
I 015	CLASSROOM	CONC	LVT-2	RB-1/RB-2	GYP	PT-1	GYP	PT-1	GYP	PT-2	GYP	PT-1	ACP-1	10' - 0"	
I 016a	UNION OFFICE	CONC	CPT-3	RB-1/RB-2	GYP	PT-1	GYP	PT-1	GYP	PT-1	GYP	PT-2	ACP-1	9' - 6"	
I 016b	UNION OFFICE	CONC	CPT-3	RB-1/RB-2	GYP	PT-1	GYP	PT-2	GYP	PT-1	GYP	PT-1	ACP-1	9' - 6"	
I 016c	STORAGE	CONC	LVT-5	RB-1	GYP	PT-1	GYP	PT-1	GYP	PT-1	GYP	PT-1	ACP-1	9' - 0"	
I 016d	HALLWAY	CONC	LVT-5	RB-1	GYP	PT-1	GYP	PT-1	GYP	PT-1	GYP	PT-1	ACP-1	9' - 6"	
I 017	SP. ED. LIFE SKILLS APARTMENT 15:1:1	CONC	LVT-5 / CPT-2	RB	GYP	PT-1	GYP	PT-1	GYP	PT-1	GYP	PT-1	ACP-1	10' - 0"	
I 017a	TRAINING BEDROOM	CONC	CPT-2	RB-1	GYP	PT-1	GYP	PT-1	GYP	PT-1	GYP	PT-1	ACP-1	10' - 0"	
I 017b	ST.	CONC	CPT-2	RB	GYP	PT-1	GYP	PT-1	GYP	PT-1	GYP	PT-1	ACP-1	10' - 0"	
I 019	SP. ED. WORK/ JOB LAB (PAES) 6:1:1	CONC	LVT-2	RB-1/RB-2	GYP	PT-1	GYP	PT-1	GYP	PT-2	GYP	PT-1	ACP-1	10' - 0"	
I 020	SP. ED. WORK/ JOB LAB (PAES) 15:1:1	CONC	LVT-2	RB-1/RB-2	GYP	PT-1	GYP	PT-1	GYP	PT-2	GYP	PT-1	ACP-1	10' - 0"	
I 021	SP. ED. WORK/ JOB LAB (PAES) 15:1:1	CONC	LVT-2	RB-1/RB-2	GYP	PT-2	GYP	PT-1	GYP	PT-1	GYP	PT-1	ACP-1	10' - 0"	
I 100	SP. ED. WORK EXPERIENCE (WE) 15:1:1	CONC	LVT-2	RB-1/RB-2	GYP	PT-1	GYP	PT-2	GYP	PT-1	GYP	PT-1	ACP-1	9' - 7"	
I 100a	STORAGE	CONC	LVT-3	RB-1	GYP	PT-1	GYP	PT-1	GYP	PT-1	GYP	PT-1	ACP-1	9' - 0"	
I 102	METAL WORK JEWELERY & SCULPTING ROOM	CONC	FIN-CONC	RB-1	GYP	PT-1	GYP	PT-1	GYP	PT-1 / CT-3	GYP	PT-1	ACB-3	9' - 7"	
I 102a	KILN ROOM	CONC	FIN-CONC	RB-1	GYP	PT-1	GYP	PT-1	GYP	PT-1	GYP	PT-1	ACP-1	9' - 0"	
I 102b	STORAGE	CONC	FIN-CONC	RB-1	GYP	PT-1	GYP	PT-1	GYP	PT-1	GYP	PT-1	ACP-1	9' - 0"	
I 104	CERAMICS ROOM	CONC	FIN-CONC	RB-1	GYP	PT-1/ CT-3	GYP	PT-1	GYP	PT-1	GYP	PT-1	ACB-3	9' - 7"	
I 104a	STORAGE	CONC	FIN-CONC	RB-1	GYP	PT-1	GYP	PT-1	GYP	PT-1	GYP	PT-1	ACP-1	9' - 0"	
I 105	ART FAC. WORK ROOM	CONC	LVT-5	RB-1/RB-2	GYP	PT-1	GYP	PT-1 / CT-3	GYP	PT-2	GYP	PT-1	ACP-1	9' - 0"	
I 105a	ST.	CONC	LVT-2	RB	GYP	PT-1	GYP	PT-1	GYP	PT-1	GYP	PT-1	ACP-1	9' - 0"	
I 105b	OFFICE	CONC	LVT-1	RB-1/RB-2	GYP	PT-1	GYP	PT-1	GYP	PT-1	GYP	PT-2	ACP-1	9' - 0"	
I 105c	ST.	CONC	LVT-1	RB-1	GYP	PT-1	GYP	PT-1	GYP	PT-1	GYP	PT-1	ACP-1	9' - 0"	
I 105d	E.C.	CONC	LVT-2	RB-1	GYP	PT-1	GYP	PT-1	GYP	PT-1	GYP	PT-1	ACP-1	8' - 0"	
I 106	ART STUDIO ROOM 3	CONC	FIN-CONC	RB-1/RB-2	GYP	PT-1	GYP	PT-1	GYP	PT-1 / CT-3	GYP	PT-2	ACB-2	9' - 7"	
I 106a	ST.	CONC	FIN-CONC	RB-1	GYP	PT-1	GYP	PT-1	GYP	PT-1	GYP	PT-1	ACP-1	9' - 7"	
I 108	FASHION DESIGN ROOM	CONC	FIN-CONC	RB-1/RB-2	GYP	PT-2	GYP	PT-1	GYP	PT-1	GYP	PT-1 / CT-3	ACB-2	9' - 7"	
I 108b	ST.	CONC	FIN-CONC	RB-1	GYP	PT-1	GYP	PT-1	GYP	PT-1	GYP	PT-1	ACP-1	9' - 0"	
I 109	STUDENT WORK SPACE	CONC	LVT-2/LVT-3	RB-2	WD	F / W	WD	F / W	GYP		GYP	PT-2	CP-2	19' - 0"	
I 110	ART STUDIO ROOM 1	CONC	FIN-CONC	RB-1/RB-2	GYP	PT-2	GYP	PT-1	GYP	PT-1 / CT-3	GYP	PT-1	ACB-2	9' - 7"	
I 110a	ST.	CONC	FIN-CONC	RB-1	GYP	PT-1	GYP	PT-1	GYP	PT-1	GYP	PT-1	ACP-1	9' - 0"	
I 112	ART STUDIO ROOM 2	CONC	FIN-CONC	RB-1/RB-2	GYP	PT-1/ CT-3	GYP	PT-1	GYP	PT-2	GYP	PT-1	ACB-2	9' - 7"	
I 114	GRAPHIC/DIGI. ARTS LAB	CONC	LVT-2	RB-1/RB-2	GYP	PT-1	GYP	PT-1	GYP	PT-1	GYP	PT-2	ACP-1	9' - 7"	
I 116	PHOTOGRAPHY ROOM	CONC	LVT-2	RB-1/RB-2	GYP	PT-1	GYP	PT-2	GYP	PT-1	GYP	PT-1 / CT-3	ACP-1	9' - 7"	
I 116a	DARK ROOM	CONC	LVT-2	RB-1	GYP	PT-1	GYP	PT-1	GYP	PT-1	GYP	PT-1	ACP-1	9' - 7"	
I 116b	ST.	CONC	LVT-2	RB-1	GYP	PT-1	GYP	PT-1	GYP	PT-1	GYP	PT-1	ACP-1	9' - 0"	
I 116c	ST.	CONC	LVT-2	RB-1	GYP	PT-1	GYP	PT-1	GYP	PT-1	GYP	PT-1	ACP-1	9' - 0"	
I 116d	ST.	CONC	LVT-2	RB-1	GYP	PT-1	GYP	PT-1	GYP	PT-1	GYP	PT-1	ACP-1	9' - 0"	
I 117	SP. ED. WORK EXPERIENCE (WE)	CONC	LVT-2	RB-1/RB-2	GYP	PT-2	GYP	PT-1	GYP	PT-1	GYP	PT-1	ACP-1	9' - 7"	
I 006a	COLD ST.	CONC	FIN-CONC		GYP	PT-1	GYP	PT-1	GYP	PT-1	GYP	PT-1		9' - 7"	
I 017c	TOILET	CONC	PCT-1		GYP	PT-1/ CT-1	GYP	PT-1 / CT-1	GYP	PT-1 / CT-1	GYP	PT-1 / CT-1	GYP	10' - 0"	
I 017d	TOILET VEST.	CONC	PCT-1		GYP	PT-1/ CT-1	GYP	PT-1 / CT-1	GYP	PT-1 / CT-1	GYP	PT-1 / CT-1	ACP-1 / GYP	10' - 0"	
I C105	CORRIDOR	CONC	LVT-2/LVT-3/LVT-4	RB-1	GYP	PT-1/WP-1/WTS-1	GYP	PT-1	GYP	PT-1/WP-1/WTS-1	GYP		ACP-3	10' - 0"	
I B000	BRIDGE I	CONC	LVT-2/LVT-3/LVT-4	RB-1	GYP	PT-1	WD	F / W	GYP	PT-1	WD	F / W	ACP-3	10' - 0"	
I C001	CORRIDOR	CONC	LVT-2/LVT-3/LVT-4	RB-1	GYP	PT-1/WP-1	GYP	PT-1/WP-1	GYP		GYP	PT-1/WP-1	ACP-2/3/ GYP	11' - 0"	
I C002	CORRIDOR	CONC	LVT-2/LVT-3/LVT-4	RB-1	GYP	PT-1	GYP	PT-1/WP-1	GYP	PT-1/WP-1	GYP	PT-1	ACP-2/3/ GYP	10' - 0"	
I C003	CORRIDOR	CONC	LVT-2/LVT-4	WDB/RB-1	GYP	PT-1	GYP	PT-1/FWPS-1	GYP		GYP	PT-1	CP-1	10' - 0"	
I C004	CORRIDOR	CONC	LVT-2/LVT-3/LVT-4	RB-1	GYP	PT-1/WP-1	GYP	PT-1/WP-1	GYP		GYP	PT-1/WP-1	ACP-1	10' - 0"	
I C006	CORRIDOR	CONC	LVT-2/LVT-3/LVT-4	RB-1	GYP	PT-1/WP-1	GYP	PT-1/WP-1	GYP	PT-1/WP-1	GYP	PT-1/WP-1	ACP-1	10' - 0"	
I C007	STORAGE	CONC	LVT-5	RB	GYP	PT	GYP	PT	GYP	PT	GYP	PT	ACP-1	9' - 0"	
I C101	CORRIDOR	CONC	LVT-2/LVT-3/LVT-4	RB-1	GYP	PT-1/WP-1/WTS-1	GYP	PT-1/WP-1/WTS-1	GYP	PT-1/WP-1/WTS-1	GYP	PT-1/WP-1/WTS-1	ACP-2/ACP-3	10' - 0"	
I C101a	ELEC. CT.	CONC	LVT-2	RB-1	GYP	PT-1	GYP	PT-1	GYP	PT-1	GYP	PT-1	ACP-1	8' - 0"	
I C102	CORRIDOR	CONC	LVT-2/LVT-3/LVT-4	RB-1	GYP		GYP	PT-1/FWPS-1					CP-1	10' - 0"	
I C102a	ELEC. CT.	CONC	LVT-2	RB-1	GYP	PT-1	GYP	PT-1	GYP	PT-1	GYP	PT-1	ACP-1	8' - 0"	
I C103	CORRIDOR	CONC	LVT-2/LVT-3/LVT-4	RB	GYP		GYP	PT-1/WP-1/WTS-1	GYP		WD / GYP	F / W / WP-1	ACP-2/ACP-3	10' - 0"	
I C104	CORRIDOR	CONC	LVT-2/LVT-3/LVT-4	RB-1	GYP	PT-1/WP-1/WTS-1	GYP	PT-1/WP-1	GYP	PT-1/WP-1/WTS-1	GYP		ACP-3	10' - 0"	
I C104A	CORRIDOR	CONC	LVT-2/LVT-3/LVT-4	RB-1	GYP	PT-1/WP-1/WTS-1	GYP	PT-1/WP-1/WTS-1	WD	F / W	GYP	PT-1/WP-1	ACP-2/ACP-3	10' - 0"	
I C105A	CORRIDOR	CONC	LVT-2/LVT-3/LVT-4	RB-1		F / W			GYP	PT-1/WP-1	GYP	PT-1/WP-1	ACP-3	10' - 0"	
I L001	LOBBY	CONC	LVT-2/LVT-3/LVT-4	WDB/RB-1	GYP	PT-1	GYP	PT-1/FWPS-1	WD	F / W PT-1	WD / GYP	F / W - PT	CP-1/CP-2	24' - 8"	
I SA	STAIR A	CONC	ETT-1		WD	F / W	GYP	PT	GYP	PT	WD	F / W	CP-1	24' - 8"	
I SA	STAIR A	CONC	LVT-3/LVT-4		WD	F / W	GYP	PT-2	GYP	PT-1	WD	F / W	CP-1		
I SB	STAIR B	CONC	ETT-1		GYP	PT-2					GYP	PT-1	CP-1	24' - 8"	
I V001	VESTIBULE	CONC	WM /LVT-4	EXT.PANEL	WD	F / W	GYP	PT	GYP	PT	WD	F/W	CP-1	10' - 6 1/2"	
I V002	VESTIBULE	CONC	WM / LVT-2/LVT-4	EXT.PANEL	GYP	EXT.PANEL	WD	F / W	WD	F / W	WD	F / W	CP-2	24' - 8"	
I V004	SECURE VESTIBULE	CONC	WM	RB-1	GYP	PT-1	WD	F / W	GYP	PT-1	WD	F / W	ACP-1	10' - 6 1/2"	
IB 001	STORAGE	CONC	EXP-CONC	RB-1	GYP	PT-1	GYP	PT-1	GYP	PT-1	GYP	PT-1	EXP		
V-003	VESTIBULE	CONC	WM	RB-1	GYP	PT-1	GYP	PT-1	GYP	PT-1	GYP	PT-1	ACP-1	10' - 6 1/2"	

ABBREVIATIONS:

ACP = ACOUSTICAL CEILING PANEL	EPY = EPOXY COATING	FRP = FIBERGLASS REINFORCED PLASTIC	PCT = PORCELAIN TILE	SRU = SEAMLESS RESILIENT URETHANE	VCT = VINYL COMPOSITION TILE
ALUM = ALUMINUM	ETT = EPOXY TERRAZZO TREADS	FWPS = FRAMED WALL PANEL SYSTEM	PLAM = PLASTIC LAMINATE	SS = SOLID SURFACE	
AWP = ACOUSTICAL WOOD PANEL	EXIST = EXISTING	GYP = GYPSUM WALL BOARD	PP = PORCELAIN PAVER	TBB = TILE BACKER BOARD	
CT = CERAMIC TILE	EXP-CONC = EXPOSED CONCRETE	LVT = LUXURY VINYL TILE	PT = PAINT	TLMEC = TILE METAL EDGING AND CORNERS	
CONC = CONCRETE	FFWD = FACTORY FINISHED WOOD DOOR	HPCV = HIGH PERFORMANCE CUSHIONED VINYL	RB = RUBBER BASE	WDB = WOOD BASE	
CPT = CARPET	FIN-CONC = FINISHED CONCRETE	MRGWB = MOISTURE RESISTANT GYPSUM WALL BOARD	SAWP = SOUND ABSORBING WALL PANEL	WM = WALK OFF MAT	

GENERAL FINISH NOTES

1. REFER TO SPECIFICATIONS FOR CEILING TYPE DESCRIPTIONS.
2. ALL STAIRCASES TO RECEIVE SLIP RESISTANT RUBBER TREADS.
3. THIS SCHEDULE SERVES AS A GENERAL LIST OF FINISH ITEMS AND IS NOT A LIST OF ALL FINISH ITEMS WITHIN A ROOM OR SPACE. REFER TO ALL CONTRACT DOCUMENT DRAWINGS AND SPECIFICATIONS TO DETERMINE ALL REQUIRED FINISHES AND FINISH ITEMS.
4. MOISTURE RESISTANT GYPSUM WALL BOARD AND ACOUSTICAL CEILING PANELS TO BE INSTALLED IN RESTROOMS, VESTIBULES AND JANITOR'S CLOSET WHERE WALLS ARE TO BE PAINTED.
5. CEMENT BOARD TO BE INSTALLED BEHIND ALL TILE FINISHED WALLS; PROVIDE SOLID TREATED WOOD BLOCKING AT ALL MOUNTED ITEMS AND ACCESSORIES, TYP.
6. WATER PROOF MEMBRANE TO BE INSTALLED BEHIND ALL TILE FINISHED WALLS IN SHOWER LOCATIONS.
7. ALL PAINTING SHALL BE PERFORMED IN ACCORDANCE WITH THE REQUIREMENTS CONTAINED IN DIVISION 9 OF THE SPECIFICATIONS.
8. CONTRACTOR SHALL PERFORM RELATIVE HUMIDITY TEST FOR CONCRETE SLABS AS PER ASTMF210 BEFORE THE INSTALLATION OF ALL FLOOR FINISHES. INFORMATION SHALL BE PROVIDED TO THE ARCHITECT AND TO THE FLOORING INSTALLERS FOR REVIEW.
9. SET FLOOR TILES IN MORTAR BED TO PROVIDE A POSITIVE PITCH TOWARDS FLOOR DRAINS.

C:\Users\ddesouza\Documents\WPSD2203_Central21_A_DDeSouzaD8TU8.rvt
3/6/2025 2:52:15 PM

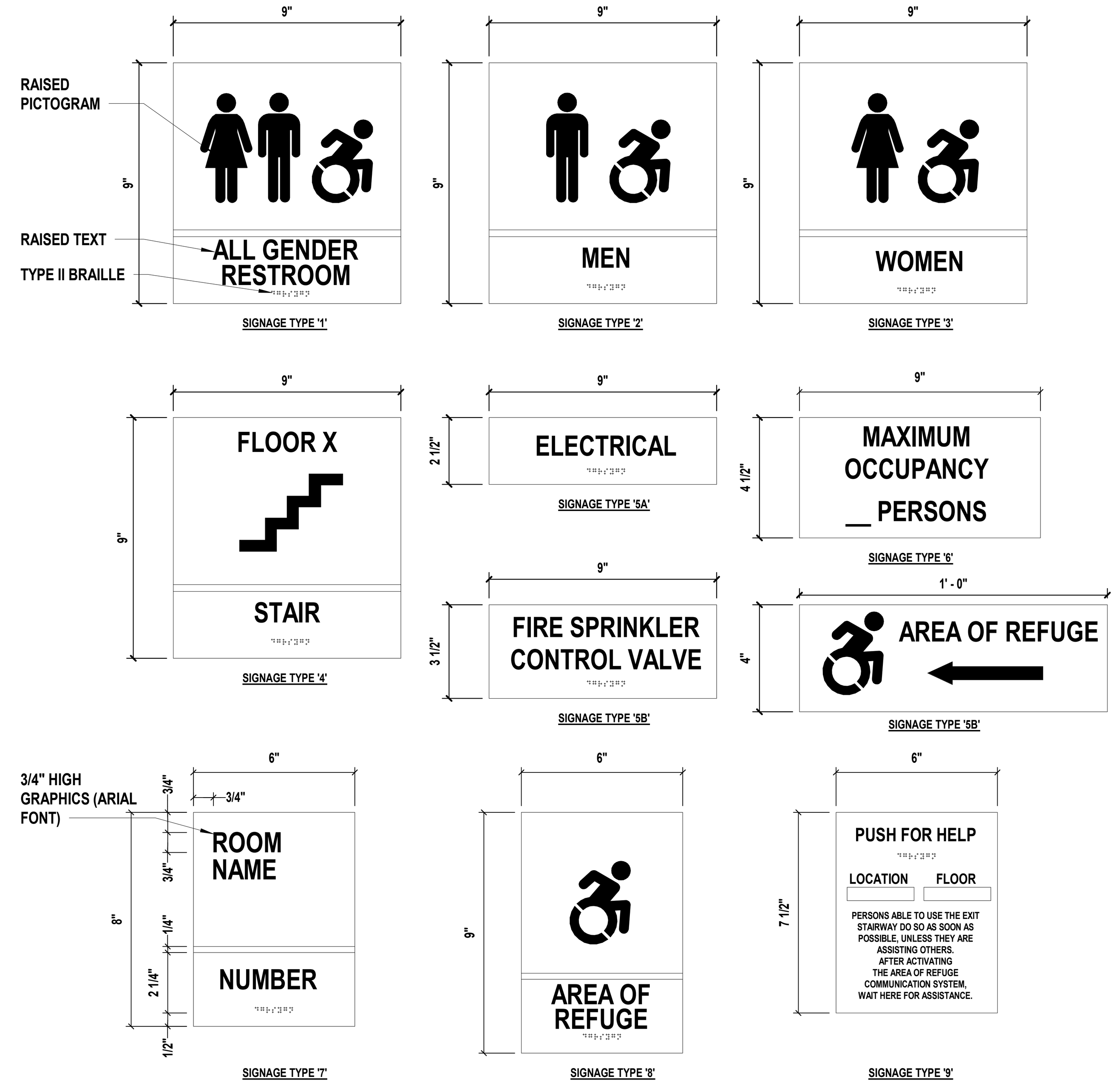

NOTES:

1. SIGNAGE TO BE TAKEFORM VIVID IMAGE INTENSE OR APPROVED EQUAL.
2. SIGNAGE TO BE ADA COMPLIANT.
3. ALL COLORS AND FINISHES TO BE SELECTED BY ARCHITECT/OWNER
4. ROOM NUMBERS TO BE CONFIRMED WITH OWNER PRIOR TO FABRICATION OF MATERIALS.
5. ALL SIGNAGE TO BE MOUNTED AS PER MANUFACTURES RECOMMENDED INSTALLATION.
6. MOUNTING LOCATION AND HEIGHT TO BE CONFIRMED WITH ARCHITECT PRIOR TO INSTALLATION.
7. REFER TO DOOR SCHEDULE FOR ROOMS TO RECEIVE ROOM SIGNAGE.

1 Signage
SCALE: 3" = 1'-0"

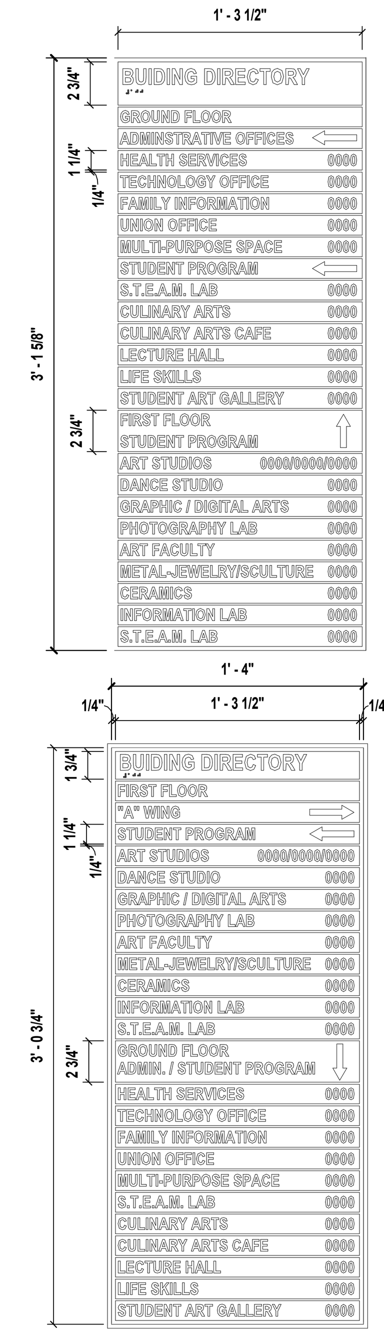

2 Signage - Building Directories
SCALE: 1 1/2" = 1'-0"

FINISH MATERIAL TYPES SCHEDULE

LABEL	MANUFACTURER	DESCRIPTION	STYLE	COLOR	SIZE	REMARKS
AWP-1	CERTAINTEDD SAINT-GOBAIN	ACOUSTIC WOOD PANEL	DECOUSTICS QUADRILLO QPP19 -TYPE 5	QUARTERED BLONDE- RQBL	1-1/8" / 10MM PROFILE	PERFORATED ACOUSTICAL WOOD PANELS W/ 3/4" ACOUSTIC CORE
CPT-1	SHAW CONTRACT	CARPET TILE	CHROMATONE TILE 5T444	TAUPE SILVER 07518	12 FT	
CPT-2	SHAW CONTRACT	CARPET TILE	CHROMATONE TILE 5T444	ORANGE TAUPE 07669	18"X36"	COLOR AT WORK II COLLECTION
CPT-3	SHAW CONTRACT	CARPET TILE	SATURATE TILE 5T109	TAUPE 07515	TBD	
CT-1	DALTILE	CERAMIC WALL TILE	MEDIAN	BEIGE MN41	24"X24"	MATTE FINISH / 12"X6" COVE BASE - WOMEN'S TOILET
CT-2	DALTILE	CERAMIC WALL TILE	MEDIAN	GRAY MN44	24"X24"	MATTE FINISH / 12"X6" COVE BASE - MEN'S TOILET
CT-3	DALTILE	CERAMIC WALL TILE	COLOR WHEEL LINEAR	MATTE URBAN PUTTY 0761	24"X8"	MATTE FINISH / BACK SPLASH TILE
CT-4	DALTILE	CERAMIC WALL TILE	COLOR WHEEL LINEAR	MATTE DESERT GRAY X714	24"X8"	MATTE FINISH / BACK SPLASH TILE
CT-5	DALTILE	CERAMIC WALL TILE	COLOR WHEEL LINEAR	ORANGE BURST 1097	12"X4"	DRINKING FOUNTAIN BACK WALL
DPP-1	HAWORTH, INC	DEMOUNTABLE PANEL PARTITIONS	ENCLOSE	VENNER: HARBOR (W3-HR)		ALUM: MATCH DURANAR FAIRVIEW TAUPE UC105741
ETT-1	WAUSAU TILE, INC.	PRECAST CEMENT TERRAZZO STAIR TREADS	ATMOSPHERE SERIES	BLUE HAWAII TZ42		(3) 1/2" BLACK EPOXY ABRASIVES INSERTS
FFWD	VT INDUSTRIES	FACTORY FINISH WOOD DOORS	HERITAGE SERIES	RIVERSTONE R118		INTERIOR DOORS -SPECIES: SELECT WHITE MAPLE - CUT: RIFT CUT
FIN-CONC	ARDEX	SELF-LEVELING CONCRETE TOPPING	ARDEX K 520			1/4" Topping
FRP-ED	SPECIAL-LITE	FIBRE REINFORCED PLASTIC EXTERIOR DOORS	SMOOTH	DARK GRAY		EXTEROR DOORS INSERT PANELS
FWPS-1	MARLITE INC.	FRAMED WALL PANEL SYSTEM	THE SIEVA LARGE PANEL WALL SYSTEM	6413-NG SILVER RIFTWOOD		LP552 -1/4" NARROW REVEAL - FORMICA PLASTIC LAMINATE
LVT-1	SIX DEGREES FLOORING SURFACES	LUXURY VINYL TILE / STAIR TREADS	IMPRESSION	IS233-C05 LIMITED GRAY OAK	6"X48" / 14 1/8" x 8 1/4"	CAULK: IC233-CO5
LVT-2	TARKETT	LUXURY VINYL TILE	CONTOUR - COLOR BEAM	C114 MANTA GREY	18"X18"	VERTICAL ASHLAR
LVT-3	TARKETT	LUXURY VINYL TILE	CONTOUR - COLOR BEAM	C108 TABBY	18"X18"	VERTICAL ASHLAR
LVT-4	TARKETT	LUXURY VINYL TILE	CONTOUR - COLOR BEAM	C101 JUNIPER	18"X18"	VERTICAL ASHLAR
LVT-5	TARKETT	LUXURY VINYL TILE	CONTOUR - COLOR BEAM	C123 SOBA	18"X18"	VERTICAL ASHLAR
PCT-1	DALTILE	PORCELAIN FLOOR TILE	VOLUME 1.0	REVERB ASH VL74	24"X12"	WOMEN'S TOILET
PCT-2	DALTILE	PORCELAIN FLOOR TILE	VOLUME 1.0	STEREO GRAY VL73	24"X12"	MEN'S TOILET
PLAM-1	FORMICA	PLASTIC LAMINATE	NATURAL GRAIN TEXTURE	6413-NG SILVER RIFTWOOD		
PT-1	BENJAMIN MOORE	WALL PAINT	WILLIAMSBURG	CW-710 BRUTON WHITE		FINISH: SATIN
PT-2	BENJAMIN MOORE	WALL PAINT	CLASSICS	168 AMBER		FINISH: SATIN
PT-3	SHERWIN WILLIAMS	SOFFIT PAINT	CLASSICS	1548 CLASSIC GRAY		FINISH: FLAT
PT-4	SHERWIN WILLIAMS	DOOR FRAME PAINT	CLASSICS	MATCH ADJACENT WALL		ALL HOLLOW METAL DOOR FRAMES; FINISH: SEMI-GLOSS
RB-1	MANNINGTON	RUBBER WALL BASE	BURKEBASE TYPE TP	168 BLUISH WHITE	4"	P-1 PAINTED WALLS
RB-2	MANNINGTON	RUBBER WALL BASE	BURKEBASE TYPE TP	090 TANDOR	4"	P-2 PAINTED WALLS
SAWP-1	CSI CREATIVE	SOUND ABSORBING WALL PANEL	SUR-STK-034	PSH239/PSH633/SND118/SND130	4'W X 9' H X 1 1/4" THCK	(2) 1/2" SOUNDCORE W/ POSHFELT EXPOSED EDGE MULTI LAYERS 1/8" / 1/4" THCK
SAWP-2	TURF DESIGN, INC	SOUND ABSORBING WALL PANEL	HEX FOLDED WALL TILE	24 ROYAL BLUE	5' H X 9' W X 2 1/4" THCK	ADHESIVE BACKING BY TURF - HORIZONTAL LAYOUT
SRU-1	STONHARD	SEAMLESS RESILIENT URATANE	STONBLEND GSI-G	CORK		Thermal Shock/Cycling Formula / RTZ VSM Cove Base
SRU-2	STONHARD	SEAMLESS RESILIENT URATANE	STONBLEND GSI-G	WOFL GRAY		Thermal Shock/Cycling Formula / RTZ VSM Cove Base
SS-1	CORIAN	SOLID SURFACE COUNTERTOP	SOLID SURFACE	LINEN		
TLMEC-1	SCHLUTER SYSTEMS	TILE METAL EDGING AND CORNERS	RONDEC	ANODIZE ALUM - SATIN		TOILETS /BACKSPLASH WALLS
WCT-1	FRY REGLET	WALL COVERING TRIM (OUTSIDE CORNERS)	WCTOSC	TO MATCH WP-1	1 3/4" X 1 3/4" (7/32" CORNER)	WALL PROTECTION CORNER TRIM
WCT-2	FRY REGLET	WALL COVERING TRIM (TOP TRIM)	WCTBT125-217	TO MATCH WP-1	1 3/8" X 5/16" (7/32" TOP)	WALL PROTECTION TERMINATION TRIM
WM	CONSTRUCTION SPECIALTIES	WALK OFF MAT (STAINLESS STEEL GRID)	GRIDLINE G6	STAINLESS STEEL		5/8" GRIDLINE W/ 3/4" x1/8" RECESSED LEVEL BASE FRAME AND HIDDEN LOCK DOWNS
WP-1	INPRO	WALL PROTECTION	RICOCHET / FRESCO	DUST GRAY R-103	4' X 1MM	USE CORNER AND TOP TRIMS WCT-1 / WCT-2
WTS-1	WALLTALKERS	WALL TACKABLE SURFACE	TAC-WALL	DEEP SEA	48" X 82"	USE TAC-WALL ALUM. J TRIM AT SIDE AND TOP OF SURFACE

H2M architects + engineers
538 Broad Hollow Road, 4th Floor East
Melville, NY 11747
631.756.8000 ▪ www.h2m.com
Architecture & Landscape Architecture: No Certificate Required
Engineering Certificate of Authorization No.: 0018178

CONSULTANTS:

MARK	DATE	DESCRIPTION
2	01-10-2025	SED ADDENDUM 2

KEVIN M. MEDLER, R.A.
NY PROFESSIONAL ARCHITECT Lic. No. 038379
"ALTERATION OF THIS DOCUMENT EXCEPT BY A LICENSED PROFESSIONAL IS ILLEGAL"
07/31/2024
Exp. Date

DESIGNED BY:	DRAWN BY:	CHECKED BY:	REVIEWED BY:
CWP	DOD/NPO	Checker	

PROJECT No:	DATE:	SCALE:
WPSD 2203	MARCH 2025	AS SHOWN

CLIENT
WHITE PLAINS CITY SCHOOL DISTRICT

ADDITION AT WHITE PLAINS HIGH SCHOOL

550 NORTH STREET, WHITE PLAINS, NY 10605

66-22-00-01-0-016-030

CONTRACT
CONTRACT G
GENERAL CONSTRUCTION

STATUS
FINAL BID SET

SHEET TITLE
FINISH SCHEDULE AND DETAILS

DRAWING No.
A 703.00

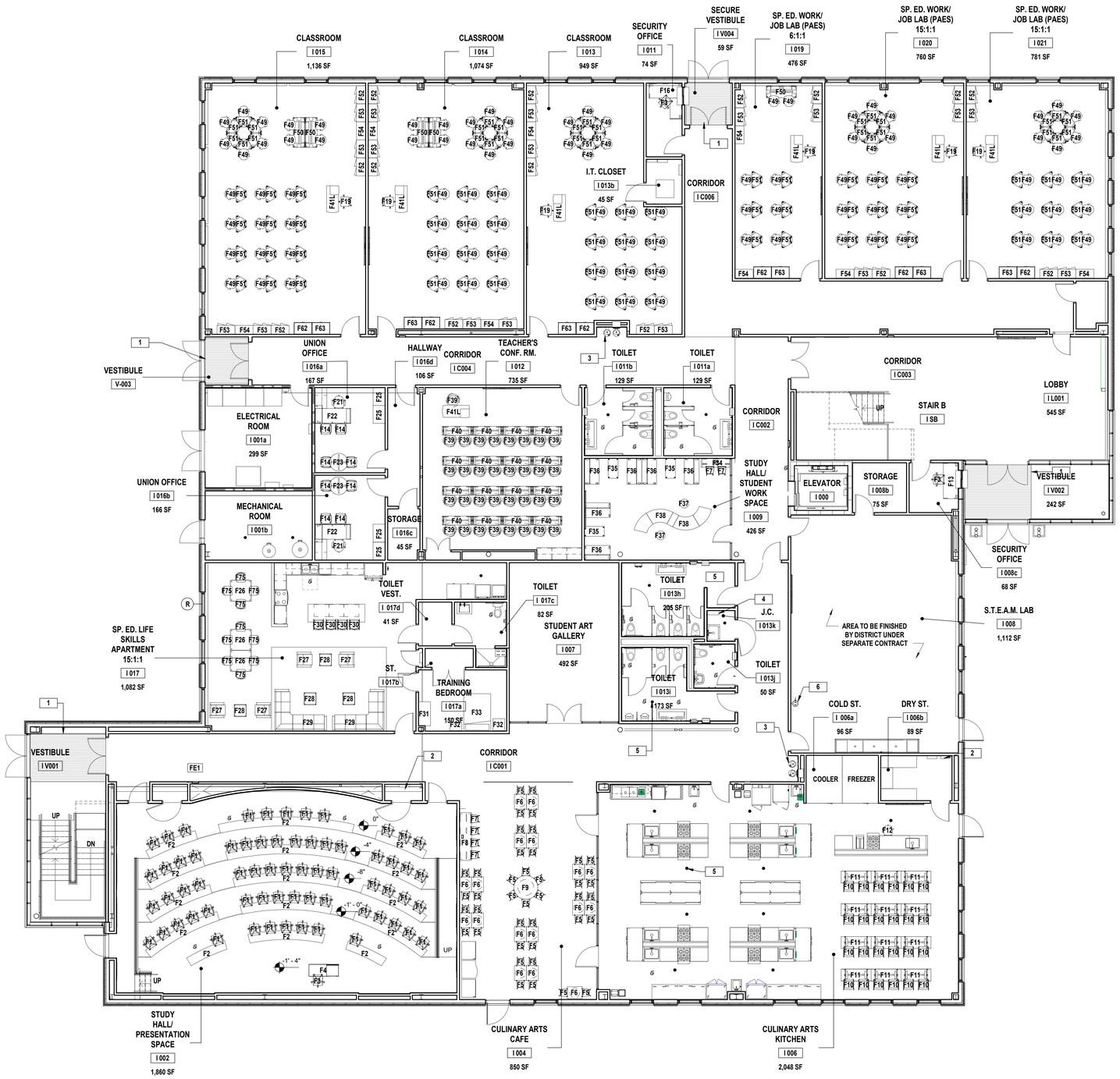

1 **Ground Floor Furniture Plan**
SCALE: 1/8" = 1'-0"

FURNITURE PLAN NOTES

1. FURNITURE SHOWN FOR REFERENCE ONLY.
2. ALL FURNITURE TO BE BOUGHT AND INSTALLED BY OTHER. THIS INFORMATION IS TO BE USED FOR COORDINATION.
3. REFER TO ELECTRICAL DRAWINGS FOR ADDITIONAL CALLOUTS AND INFORMATION.

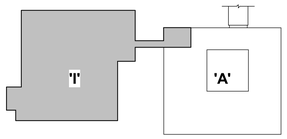

Key Plan
Scale: N.T.S.

H2M architects + engineers
538 Broad Hollow Road, 4th Floor East
Melville, NY 11747
631.756.8000 • www.h2m.com
Architecture & Landscape Architecture: No Certificate Required
Engineering Certificate of Authorization No.: 0018178

CONSULTANTS:

MARK	DATE	DESCRIPTION
2	01-10-2025	SED ADDENDUM 2

REGISTERED ARCHITECT KEVIN MICHAEL MEDLER 038379 STATE OF NEW YORK

KEVIN M. MEDLER, R.A.
BY PROFESSIONAL ARCHITECT LIC. No. 038379

DESIGNED BY:	DRAWN BY:	CHECKED BY:	REVIEWED BY:
CWP	DOD/NPO	Checker	-
PROJECT No: WPSD 2203	DATE: MARCH 2025	SCALE: AS SHOWN	

CLIENT

WHITE PLAINS CITY SCHOOL DISTRICT

ADDITION AT WHITE PLAINS HIGH SCHOOL

550 NORTH STREET, WHITE PLAINS, NY 10605

66-22-00-01-0-016-030

CONTRACT
CONTRACT G
GENERAL CONSTRUCTION

STATUS
FINAL BID SET

SHEET TITLE
GROUND FLOOR FURNITURE AND SIGNAGE PLAN

DRAWING No.
A 704.00

C:\Users\dsouza\Documents\WPSD2203_Certified21_A_DDnSouzaDETUB.rvt
3/8/2023 3:27:56 PM

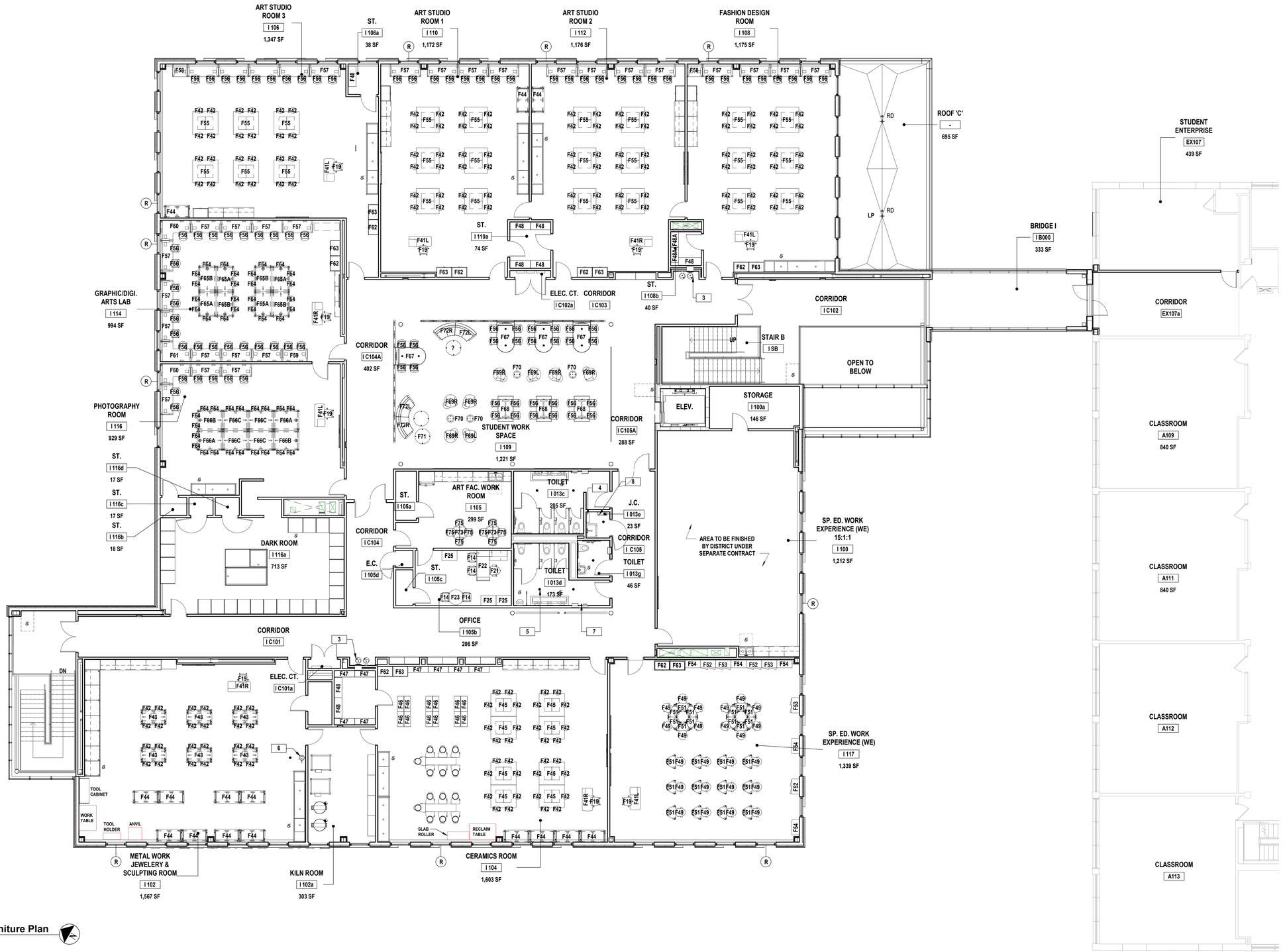

1 **First Floor Furniture Plan**
SCALE: 1/8" = 1'-0"

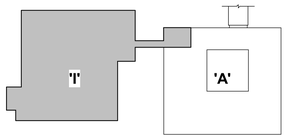

Key Plan
Scale: N.T.S.

FURNITURE PLAN NOTES

1. FURNITURE SHOWN FOR REFERENCE ONLY.
2. ALL FURNITURE TO BE BOUGHT AND INSTALLED BY OTHER. THIS INFORMATION IS TO BE USED FOR COORDINATION.
3. REFER TO ELECTRICAL DRAWINGS FOR ADDITIONAL CALLOUTS AND INFORMATION.

H2M architects + engineers
538 Broad Hollow Road, 4th Floor East
Melville, NY 11747
631.756.8000 • www.h2m.com
Architecture & Landscape Architecture: No Certificate Required
Engineering Certificate of Authorization No.: 0018178

CONSULTANTS:

MARK	DATE	DESCRIPTION
2	01-10-2025	SED ADDENDUM 2

REGISTERED ARCHITECT KEVIN MICHAEL MEDLER 038379 STATE OF NEW YORK

KEVIN M. MEDLER, R.A.
NY PROFESSIONAL ARCHITECT Lic. No. 038379

DESIGNED BY:	DRAWN BY:	CHECKED BY:	REVIEWED BY:
CWP	DOD/NPO	Checker	

PROJECT No:	DATE:	SCALE:
WPSD 2203	MARCH 2025	AS SHOWN

CLIENT

WHITE PLAINS CITY SCHOOL DISTRICT

ADDITION AT WHITE PLAINS HIGH SCHOOL

550 NORTH STREET, WHITE PLAINS, NY 10605

66-22-00-01-0-016-030

CONTRACT

CONTRACT G GENERAL CONSTRUCTION

STATUS

FINAL BID SET

SHEET TITLE

FIRST FLOOR FURNITURE PLAN AND SIGNAGE PLAN

DRAWING No.

A 705.00

C:\Users\kdesouza\Documents\WPSD2203_Central21_A_DDsSouzaDBT18.rvt

3/6/2025 2:52:32 PM

Furniture Schedule

Keynote	Description	Manufacturer	Model	Size	Remarks
F1	MB Task Chair Mesh Tilter - Asphalt Base Frame	GLOBAL FURNITURE GROUP	8456		
F2	KI Seminar Fixed Table 36" H	KI, Inc.	KI SEMINAR FIXED TABLE		
F3	MB Task Chair Mesh Tilter - Asphalt Base Frame	GLOBAL FURNITURE GROUP	8456NA		
F4	Motem Teachers Desk - Lectern - Split Top	Smith System	Teacher Desk - Right Hand Lectern		
F5	SAS Side Chair 21""W 22""D 33""H	GLOBAL FURNITURE GROUP	8647		
F6	Athens Square Table - 4" Column, 29" H - 24" x 24", Powdercoat, Veneer Reed Edge	KI, Inc.	AH4S2429P:RE		
F7	SAS Low Back Bar Stool 21""W 22""D 33""H	GLOBAL FURNITURE GROUP	8648LBNS30		
F8	Serenade Gathering Table - Non-Contrast Laminate, 24D x 96W x 42H, Half Modesty, No Footrest, Villa Module with USB	KI, Inc.	SEGH2496L/NC:ST:NFT:1VM		
F9	Athens Round Table - 5" Column, 29" H - 48" Diameter, Powdercoat, Veneer Plateau Edge	KI, Inc.	AH5R4829P:		
F10	Duet - Armless Chair	Global Furniture Group	6621, 6621G, 6621B, 6621GB, 6621P, 6621GP		
F11	Pirouette Nesting Rectangular Training Table - 18"D x 60"W x 29"H, 74P Edge, (1) Node In Surface Module, Polyester Modesty Panel, Casters	KI, Inc.	PN		
F12	Intellect Wave Large Task Stool - Poly,No Arm,Hard Floor Casters	KI, Inc.	IWS/S		
F13	700 Series Desk - 30"D x 72"W x29"H, Partial Modesty Panel, Grommet, 74P Edge	KI, Inc.	7D/D3072:74P:P:N		
F14	Katera Four-Leg Armchair - Wood, Upholstered Seat, Non-Ganging	KI, Inc.	KT1V11		
F16	700 Series Desk - 30"D x 66"W x29"H, Full Modesty Panel, Grommets, 74P Edge	KI, Inc.	7D/D3066:74P:F:G		
F16A	700 Series Desk -Return, Right, 24"D x 42"W x29"H, Full Modesty Panel, Grommets, 74P Edge	KI, Inc.	7D/R2442:74P:F:G		
F19	Diem Weight-Activated Task Chair with Seat Depth Adjustment, Armless	KI, Inc.	KIDE840		
F21	Oath Task Armchair	KI, Inc.	OH84QB		
F22	Likha Modular Desk Top - 72"W x 24"D x 1"H, Left to Right Grain, Right Grommet	KI, Inc.	LI663072TP:GR		
F22A	Likha Full Pedestal Return - Right Box/Box/File, 42"W x 24"D, Aluminum Quadra Pull, Left Grommet, Back Grommet	KI, Inc.	LI682442RF1:AQD:GL:BCKGRM		
F22B	Likha Wall Mount Sliding Door Hutch - 72"W x 15"D x 21-3/16"H, One High Gloss Acrylic Sliding Door, None	KI, Inc.	LI661572SWD1HGA		
F23	Likha Circular Table Top - 36" Diameter, Accommodates 3 Chairs	KI, Inc.	LI663636CT		
F25	Likha Lateral - Two Drawer, 36"W x 24"D x 30"H, Aluminum Quadra Pull	KI, Inc.	LI662436L2:AQD		
F26	Dining Tables Wood Top with Chippendale legs 42"W 42"D 29 1/16"H	GLOBAL FURNITURE GROUP	GC3773-WC		
F27	S7901FR, S7901LFR, S7901FL, S7901LFL	Global Furniture Group	Citi Square - Single Seat with One Arm - Fabric & Leather Fabric		
F28	End Tables Wood Top Chippendale legs 21"W 21"D 21 1/16"H	GLOBAL FURNITURE GROUP	GC3761-WC		
F29	S7891FR, S7891LFR, S7891FL, S7891LFL	Global Furniture Group	Citi Square - Three Seater with One Arm - Fabric & Leather Fabric		
F29A	S7862F, S7862LF	Global Furniture Group	Citi Square - Linking Corner Unit - Fabric & Leather Fabric		
F29B	S7890FR, S7890LFR, S7890FL, S7890LFL	Global Furniture Group	Citi Square - Two Seater with One Arm - Fabric & Leather Fabric		
F30	LimeLite Cafe Stool, 30" High, Poly Seat/Back, Steel Glides	KI, Inc.	LL4100H30/GSL		
F31	Laminate Desk 48"Wx24"Dx30"H	Southwest Solutions Group			
F32	Nighstand Laminate -36" W x 18" D	Southwest Solutions Group			
F33	Monarch Specialties Bed Frame	Monarch Specialties	5911F		
F34	Serenade Gathering Table - Non-Contrast Laminate, 18D x 60W x 42H, Half Modesty, Footrest, Villa Module with USB	KI, Inc.	SEGH1860L/NC:ST:FTR:1VM		
F35	7731, 7732, 7733	Global Furniture Group	River - Coffee Tables		
F36	River two seat sofa standard high back with back surface	Global Furniture Group	R27804S		
F37	MyPlace Round Table - 18"Dia. x 18"H, Concealed Glides, Non-Contrast	KI, Inc.	MPT18R/CGL/NC		
F38	MyPlace 60° Curve Backless Seat - 54"W x 26"D x 32"H, Wood Feet, Contrast	KI, Inc.	MPC60/WFT/FC		
F38A	MyPlace 45° Curve Backless Seat - 41"W x 26"D x 32"H, Wood Feet, Contrast	KI, Inc.	MPC45/WFT/FC		
F38B	MyPlace Rectangular In-Line Table - 13"W x 26"D x 18"H, Wood Feet, Non-Contrast	KI, Inc.	MYPTED/WFT/NC		
F39	Grazie Cantilever Task Chair - Poly Seat/Back, Hard Floor Casters	KI, Inc.	GPDCAP:S		
F40	Pirouette Nesting Rectangular Training Table - 18"D x 60"W x 29"H, 74P Edge, (1) Node In Surface Module, Polyester Modesty Panel, Casters	KI, Inc.	PINR1860T-74P:MO1:PMP:4EC		
F41L	Instruct Classroom Furniture - All Terrain Mobile Instructors Desk, 54" Wide Worksurface on Left, Steel Door,Aluminum Metric Pull	KI, Inc.	ATMTDP2454-74P		
F41R	Instruct Classroom Furniture - All Terrain Mobile Instructors Desk, 54" Wide Worksurface on Left, Steel Door,Aluminum Metric Pull	KI, Inc.	ATMTDP2454-74P		
F42	600 Series Industrial Stool - 28"High, Wood Seat, Adjustable Height	KI, Inc.	624WA		
F43	Stout Table - 36D x 60W, 36"H Fixed Height, Butcher Block Worksurface, 2 Pegboards, Dual Footrest, 2 Power Modules, Bag Hooks, Glides	KI, Inc.	SUEBA-WBB:PB2:DFT:GNY:MU2:BH		
F44	Stout Table - 30D x 60W, 36"H Fixed Height, Butcher Block Worksurface, 2 Pegboards, No Footrest, 2 Power Modules, Bag Hooks, Casters	KI, Inc.	SUEBA-WBB:PB2:NFT:CCC:MU2:BH		
F45	Ruckus Storage Worktable with 1-3/4" Butcher Block Wood Top, 54Wx60Dx36H, Double-Face 2x2 Cubby Storage, with Doors, No Power, No Bag Hooks	KI, Inc.	RCWT605436CDR-WBB		
F46	4 Post Shelving Assemble - 1'-3"D x 3'-0"W x 6'-4" H	Southwest Solutions Group_SPA_DAT	4P		
F47	4 Post Shelving Assemble - 1'-3"D x 4'-0"W x 6'-4" H	Southwest Solutions Group_SPA_DAT	4P		
F48	4 Post Shelving Assemble - 1'-6"D x 4'-0"W x 6'-4" H	Southwest Solutions Group_SPA_DAT	4P		
F48A	4 Post Shelving Assemble - 1'-6"D x 3'-0"W x 6'-4" H	Southwest Solutions Group_SPA_DAT	4P		
F49	The Node chair is mobile and supports all the ways students learn. It's designed for quick, easy transitions in the classroom, and to support learning modes across the campus.	Steelcase			
F50	Pillar Rectangular Table - 24"D x 60"W x 29"H, Dean In-Surface Pattern Module, Polyester Modesty Panel, Casters	KI, Inc.	PLPRT2460-74P:PMD1:PMP:CST		
F51	Ruckus Post Leg Desk - Trapezoid, Sit Height Adj., 21"x34",73P Edge,No Storage,with Casters	KI, Inc.	RDEEM34-73P:CCC:NB		
F52	Ruckus Single-Faced Storage Cubby - 36Wx18Dx36H, Door-Hinge Left, Standard Lock, Casters	KI, Inc.	RKC361836DR		
F53	Ruckus Single-Faced Storage Cubby - 36Wx18Dx36H, Door-Hinge Left, Combination Lock, Casters	KI, Inc.	RKC361836DR:CLCKL:4CW		
F54	Ruckus Single-Faced Storage Cubby - 36Wx18Dx36H, Open, Casters	KI, Inc.	RKC361836OP		
F55	Ruckus Storage Worktable with 1-3/4" Butcher Block Wood Top, 54Wx60Dx36H, Double-Face 2x2 Cubby & Tote Storage, (6) 6" Totes & (2) 3" Totes, Open, Two Under-surface Power Modules with USB, No Bag Hooks	KI, Inc.	RCWT605436CTOP-WBB:WPC2:NB		
F56	Strive Task Armless Chair - Upholstered Seat	KI, Inc.	SPDNAU		
F57	Connection Zone Adjoining Worksurface - 30"D x 72"W x 29"H, 74P Edge, Dean Cutout-Left/Right	KI, Inc.	CZBWR30721:74P:CSD:LR		
F58	Connection Zone Adjoining Worksurface - 30"D x 36"W x 29"H, 74P Edge, Dean Cutout-Center	KI, Inc.	CZBWR30361:74P:CSD:C		
F59	Connection Zone Adjoining Worksurface - 30"D x 60"W x 29"H, 74P Edge, Dean Cutout-Left/Right	KI, Inc.	CZBWR30601:74P:CSD:LR		
F60	Connection Zone Extended Corner Worksurface - 30 x 48 x 72 x 30-74P Edge, Dean Cutout-Left/Right	KI, Inc.	CZBWEC30487230:74P:CSD:LR		
F61	Connection Zone Extended Corner Worksurface - 30 x 72 x 48 x 30-74P Edge, Dean Cutout-Left/Right	KI, Inc.	CZBWEC30724830:74P:CSD:LR		
F62	Wardrobe Storage with Rod and Shelves	Case Systems	T2640		
F63	Cubicle Storage with Doors	Case Systems	T1040		
F64	600 Series Industrial Stool - 21"High, Wood Seat, Adjustable Height	KI, Inc.	618WA		
F65A	Stout Table - 42D x 60W, Adj. Height, Resin Worksurface, No Pegboard, No Footrest, 2 Power Modules, No Baghooks, Casters	KI, Inc.	SUEFA-RNT:NPB:NFT:CCC:MU2:NB		
F65B	Stout Table - 42D x 60W, Adj. Height, Resin Worksurface, No Pegboard, No Footrest, 2 Power Modules, No Baghooks, Casters	KI, Inc.	SUEFA-RNT:NPB:NFT:CCC:MU2:NB		
F66A	Stout Table - 48D x 60W, Adj. Height, Resin Worksurface, No Pegboard, No Footrest, 2 Power Modules, No Baghooks, Casters	KI, Inc.	SUEFA-RNT:NPB:NFT:CCC:MU2:NB		
F66B	Stout Table - 48D x 60W, Adj. Height, Resin Worksurface, No Pegboard, No Footrest, 2 Power Modules, No Baghooks, Casters	KI, Inc.	SUEFA-RNT:NPB:NFT:CCC:MU2:NB		
F66C	Stout Table - 48D x 60W, Adj. Height, Resin Worksurface, No Pegboard, No Footrest, 1 Power Module, No Baghooks, Casters	KI, Inc.	SUEFA-RNT:NPB:NFT:CCC:MU1:NB		
F67	Smith System Multimedia Table - Circular Base	Smith System	01458		
F68	Pirouette Nesting Rectangular Collaborative Table - 36"D x 60"W x 29"H, 74P Edge, Casters	KI, Inc.	PIFR3660C-74P		
F69L	Lounge Chair Laminate Book Shelf	GLOBAL FURNITURE GROUP	3372		
F69R	Lounge Chair Laminate Book Shelf	GLOBAL FURNITURE GROUP	3372		
F71	River - Round Coffe Table 36" Dia.	Global Furniture Group	7734, 7735		
F72L	River - IS Curve Two Seater Sofa Standard Back, Left Arm	Global Furniture Group	7710L, 7711L, 7712L		
F72R	River - IS Curve Two Seater Sofa Standard Back, Right Arm	Global Furniture Group	7710R, 7711R, 7712R		
F73	Tributaire X-Base Round Cafe Table - 36"Diameter,29"H, Knife Edge	KI, Inc.	TJCAB-KN:GLP:NNN		
F75	LimeLite Wood Leg Chair, Poly Seat/Back, Steel Glides	KI, Inc.	LW100/GSL		

FURNITURE SCHEDULE NOTES

1. FURNITURE SHOWN FOR REFERENCE ONLY.
2. ALL FURNITURE TO BE BOUGHT AND INSTALLED BY OTHER. THIS INFORMATION IS TO BE USED FOR COORDINATION.
3. REFER TO ELECTRICAL DRAWINGS FOR ADDITIONAL CALLOUTS AND INFORMATION.

C:\Users\ddesouza\Documents\WPSD2203_Central21_A_DDeSouzaD8TU8.rvt
3/6/2025 2:52:32 PM

H2M architects + engineers
538 Broad Hollow Road, 4th Floor East
Melville, NY 11747
631.756.8000 ▪ www.h2m.com
Architecture & Landscape Architecture: No Certificate Required
Engineering Certificate of Authorization No.: 0018178

CONSULTANTS:

MARK	DATE	DESCRIPTION

REGISTERED ARCHITECT KEVIN MICHAEL MEDLER 038379 STATE OF NEW YORK

07/31/2024
Exp. Date
KEVIN M. MEDLER, R.A.
NY PROFESSIONAL ARCHITECT Lic. No. 038379
"ALTERATION OF THIS DOCUMENT EXCEPT BY A LICENSED PROFESSIONAL IS ILLEGAL"

DESIGNED BY:	DRAWN BY:	CHECKED BY:	REVIEWED BY:
CWP	DOD/NPO	Checker	

PROJECT No:	DATE:	SCALE:
WPSD 2203	MARCH 2025	AS SHOWN

CLIENT
WHITE PLAINS CITY SCHOOL DISTRICT

ADDITION AT WHITE PLAINS HIGH SCHOOL

550 NORTH STREET, WHITE PLAINS, NY 10605

66-22-00-01-0-016-030

CONTRACT
CONTRACT G
GENERAL CONSTRUCTION

STATUS
FINAL BID SET

SHEET TITLE
FURNITURE SCHEDULE

DRAWING No.
A 706.00

GENERAL SPRINKLER NOTES

1. ALL EQUIPMENT SHALL BE APPROVED AND LISTED FOR FIRE PROTECTION SERVICE.
2. PROVIDE A WATER SUPPLY LETTER WITH FLOW TEST DATA INDICATING DATE OF TEST AND DATA USED FOR HYDRAULIC CALCULATIONS.
3. THE CONTRACTOR IS RESPONSIBLE TO PREPARE APPLICATIONS, PAY FEES, AND OBTAIN ALL PERMITS AND APPROVALS AS REQUIRED. DESIGN AND INSTALL SYSTEMS COMPLETE AND IN WORKING ORDER, AND IN COMPLIANCE WITH THE REQUIREMENTS OF THE UNIFORM CODE, NFPA, LOCAL FIRE DEPARTMENT, AND AUTHORITY HAVING JURISDICTION.
4. FLOOR PLANS ARE PROVIDED FOR CONTRACTOR'S USE AS BACKGROUND DRAWINGS. CONTRACTOR SHALL REVIEW AND COORDINATE WORK WITH ALL OTHER BUILDING DRAWINGS AS REQUIRED TO PROVIDE A COMPLETE AUTOMATIC SPRINKLER PROTECTION IN THE AREAS OF WORK AS DESCRIBED IN SCOPE OF WORK AND IN THE PROJECT SPECIFICATIONS.
7. THE CONTRACTOR'S MATERIAL AND TEST CERTIFICATES REQUIRED BY THE UNIFORM CODE AND NFPA FOR ABOVE GROUND AND UNDERGROUND PIPE SHALL BE SUBMITTED TO THE AUTHORITY HAVING JURISDICTION PRIOR TO APPROVAL OF THE INSTALLATION.
7. INSPECTION AND TESTS OF FIRE SUPPRESSION SYSTEM SHALL BE CONDUCTED AS SPECIFIED IN THE UNIFORM CODE AND NFPA. DOCUMENTATION OF ALL REQUIRED SYSTEMS INSPECTION AND TEST CERTIFICATES SHALL BE PROVIDED IN WRITING TO THE OWNER, ENGINEER AND AUTHORITY HAVING JURISDICTION.
8. PIPING SPECIFICATIONS, PIPE SCHEDULES, SYSTEM TEST PIPES, PROTECTION AGAINST CORROSION, DAMAGE FITTINGS, VALVES, HANGERS, SPRINKLERS, GUARDS AND SHIELDS SHALL BE IN ACCORDANCE NFPA 13, 2016 EDITION.
9. WET-PIPE FIRE SUPPRESSION SYSTEMS SHALL BE PROTECTED AGAINST FREEZING AT ALL TIMES. THE OWNER SHALL PROVIDE HEAT THROUGHOUT THE ENTIRE AREA WHERE WET-PIPE FIRE SUPPRESSION SYSTEMS ARE INSTALLED.
10. FIRE SUPPRESSION SYSTEMS, EQUIPMENT, AND APPURTENANCES SHALL BE PROTECTED AGAINST MECHANICAL DAMAGE.
11. THE CONTRACTOR IS RESPONSIBLE FOR PROVIDING AND INSTALLING ALL REQUIRED SIGNAGE AND HYDRAULIC NAMEPLATES. ALL VALVES SHALL BE IDENTIFIED AS REQUIRED BY THE UNIFORM CODE AND NFPA.
12. THE CONTRACTOR SHALL PROVIDE PERMANENT PROVISIONS TO FACILITATE FLUSHING SYSTEM PIPING BY PROVIDING FLUSHING CONNECTIONS.
13. ALL VALVES ON CONNECTIONS TO WATER SUPPLIES AND IN SUPPLY TO FIRE SUPPRESSION SYSTEMS SHALL BE APPROVED OS&Y OR APPROVED INDICATOR TYPE WITH FIRE ALARM SYSTEM SUPERVISORY SWITCHES. CONTRACTOR SHALL FURNISH AND INSTALL SUPERVISORY SWITCHES FOR ALL FIRE SUPPRESSION VALVES ON THE PROJECT.
14. WATER SUPPLY TEST PIPES AND GAUGES SHALL BE PROVIDED AS SPECIFIED IN NFPA 13.
15. ALL PIPES PASSING THROUGH FOUNDATION WALLS SHALL BE PROTECTED. UNDERGROUND PIPING, INCLUDING WHERE IT ENTERS THE BUILDING, SHALL BE SUPPORTED AS SPECIFIED NY NFPA 24 PERTAINING TO RODDING, CLAMPING AND THRUST BLOCKING OF THE PIPE.
16. HANGING AND BRACING SPRINKLER SYSTEM SHALL BE IN ACCORDANCE WITH CHAPTER 9 OF NFPA 13. SPRINKLER PIPING SHALL BE SUPPORTED BY ADJUSTABLE HANGERS AND SEISMIC BRACING PER THE UNIFORM CODE AND NFPA. LISTED FLEXIBLE COUPLINGS SHALL BE INSTALLED AT THE TOP AND BOTTOM OF ALL RISERS.
17. HANGERS SHALL BE OF A TYPE APPROVED FOR USE WITH THE PIPE OR TUBE INVOLVED AND APPROPRIATE FOR THE TYPE OF BUILDING CONSTRUCTION. SPRINKLER PIPING SHALL BE SUPPORTED BY ADJUSTABLE HANGERS PER NFPA.
18. CLEARANCES FOR WALL PENETRATIONS SHALL BE IN ACCORDANCE WITH NFPA 13.
19. ALL PIPING PASSING THROUGH FIRE-RESISTANCE RATED CONSTRUCTION SHALL BE INSTALLED WITH UL LISTED MATERIALS AND ASSEMBLIES TO MAINTAIN THE REQUIRED RATING. MATERIALS AND INSTALLATION SHALL COMPLY WITH THE UNIFORM AND CONTRACT SPECIFICATIONS.
20. THE CONTRACTOR IS RESPONSIBLE FOR PAINTING FIRE PROTECTION PIPING IN ACCORDANCE WITH THE CONTRACT SPECIFICATIONS. ALL EXPOSED SPRINKLER PIPING SHALL BE PAINTED RED IN BACK-OF-HOUSE AREAS AND PAINTED TO MATCH ARCHITECTURAL FINISHES IN FINISHED AREAS. WHERE REQUIRED BY THE AUTHORITY HAVING JURISDICTION THE CONTRACTOR SHALL PAINT ALL PIPING RED, INCLUDING FIRE PROTECTION PIPING IN CHASES AND ALL OTHER ENCLOSED PIPING.
21. A ONE PIECE REDUCING FITTING OF GOOD DESIGN SHOULD BE USED WHEREVER A CHANGE IS MADE IN THE SIZE OF PIPE IN ACCORDANCE WITH NFPA.

SPRINKLER SYSTEM NOTES

1. THE CONTRACTOR IS RESPONSIBLE TO SUPPLY AND INSTALL A COMPLETE AUTOMATIC SPRINKLER PROTECTION THROUGHOUT THE BUILDING THAT IS CODE COMPLIANT. IN THE EVENT THAT UNFORESEEABLE FIELD CONDITIONS CREATE SPRINKLER OBSTRUCTIONS OR A NON COMPLIANT INSTALLATION, IT IS THE CONTRACTOR'S RESPONSIBILITY TO NOTIFY THE ARCHITECT AND ENGINEER IN WRITING PRIOR TO THE INSTALLATION. IF NON COMPLIANT INSTALLATION COMMENCES WITHOUT NOTIFYING THE ARCHITECT OR ENGINEER, IT IS THE CONTRACTOR'S RESPONSIBILITY AT CONTRACTOR'S EXPENSE TO RECTIFY THE SPRINKLER SYSTEM TO BE CODE COMPLIANT.
2. ALL WORK SHALL BE PERFORMED AND INSTALLED IN ACCORDANCE WITH THE 2020 NEW YORK STATE FIRE PREVENTION AND BUILDING CODE AND ITS REFERENCED STANDARDS, INCLUDING BUT NOT LIMITED TO, NFPA 13 (2016 EDITION) AND THE REQUIREMENTS OF THE AUTHORITY HAVING JURISDICTION. SYSTEMS SHALL BE DESIGNED AS OUTLINED IN THE CONTRACT DRAWINGS AND SPECIFICATIONS.
3. SPRINKLER PLANS AS SHOWN ARE FOR BIDDING PURPOSES ONLY, AND IS ONLY TO DEMONSTRATE DESIGN INTENT. SPRINKLER CONTRACTOR IS TO SUBMIT SHOP DRAWINGS INCLUDING HYDRAULIC CALCULATIONS FOR SYSTEM PIPE SIZING AND SHALL BE SIGNED AND SEALED BY A LICENSED PROFESSIONAL ENGINEER TO BE REVIEWED BY H2M. SPRINKLER CONTRACTOR SHALL DESIGN SPRINKLER PIPING TO INCLUDE A 10 PERCENT MARGIN OF SAFETY FOR BOTH AVAILABLE WATER FLOW AND PRESSURE.
4. INSTALLER'S QUALIFICATIONS: A QUALIFIED FIRM THAT IS EXPERIENCED OF AT LEAST A MINIMUM OF 5 PREVIOUS PROJECTS SIMILAR IN SIZE AND SCOPE TO THE PROJECT, FAMILIAR WITH PRECAUTIONS REQUIRED, AND IN COMPLIANCE WITH THE REQUIREMENTS OF THE AUTHORITY HAVING JURISDICTION. FIRE PROTECTION CONTRACTOR SHALL SUBMIT APPROPRIATE CERTIFICATION INCLUDING CERTIFICATION NUMBER UPON SHOP DRAWING SUBMISSION.
5. SPRINKLER CONTRACTOR SHALL MAKE AN ALLOWANCE TO INSTALL A MINIMUM OF 10% ADDITIONAL SPRINKLER HEADS TO BE INSTALLED AS TO PROVIDE ADEQUATE COVERAGE DUE TO ANY MECHANICAL AND/OR ARCHITECTURAL OBSTRUCTIONS, DUCT WORK, PIPING, ETC. INSTALLED DURING CONSTRUCTION WHICH MAY ALTER THE ORIGINAL DESIGN.
6. PROVISIONS SHOULD BE MADE TO FACILITATE FLUSHING SYSTEM PIPING BY PROVIDING FLUSHING CONNECTIONS CONSISTING OF A CAPPED NIPPLE 4" LONG ON THE END OF THE CROSS MAIN. ALSO INCLUDES DRAINING OF TRAPPED WATER USING AUXILLARY DRAINS FOR WET SYSTEMS AND DRUM DRIPS FOR DRY SYSTEMS. ALL DRAINS TO BE ACCESSIBLE AND LABELED IN ACCORDANCE WITH NFPA 13.
7. ALL PIPING SHALL BE A MINIMUM OF 1-INCH.
8. A MINIMUM OF 18 INCHES MUST BE KEPT CLEAR BELOW SPRINKLERS TO TOP OF STORAGE.
9. SPACING, LOCATION AND POSITION OF SPRINKLERS SHALL BE IN ACCORDANCE WITH ALL REQUIRED OBSTRUCTION CRITERIA OF THE UNIFORM CODE AND NFPA.
10. CENTER SPRINKLER HEADS ON CEILING TILES.
11. SUSPENDED CEILING TILE SYSTEMS AND GYPSUM BOARD CEILINGS ARE SHOWN. ALL OTHER CEILINGS ARE OPEN TO THE STRUCTURE. REFER TO 'A' AND 'S' DRAWINGS FOR SECTIONS CLEARANCES, AND FINAL REFLECTED CEILING PLANS.
12. DISTANCE OF SPRINKLERS FROM HEAT SOURCES SHALL BE IN ACCORDANCE WITH NFPA.
13. SPRINKLER TEMPERATURE RATINGS SHALL BE ORDINARY UNLESS SPRINKLERS ARE EXPOSED TO HIGH TEMPERATURE EQUIPMENT, UNVENTILATED ATTICS, OR SKYLIGHTS. IN SUCH CASE, SPRINKLER TEMPERATURE RATINGS SHALL BE IN ACCORDANCE WITH NFPA.
14. ALL SPRINKLERS SHALL BE QUICK RESPONSE UNLESS OTHERWISE NOTED. THE USE OF QUICK RESPONSE AND STANDARD RESPONSE SPRINKLERS IN THE SAME SPACE IS NOT PERMITTED.
15. CONTRACTOR SHALL PROVIDE A SPRINKLER CABINET WITH SPRINKLER WRENCHES AND A STOCK OF EXTRA SPRINKLERS AS REQUIRED BY THE NFPA. THE QUANTITY AND TYPE OF OF WRENCHES SHALL BE AS REQUIRED BY NFPA, INCLUDING FOR EACH TEMPERATURE RATING.
16. SPRINKLER ALARMS SHALL BE INSTALLED IN ACCORDANCE WITH THE UNIFORM CODE AND NFPA.
17. CONTRACTOR SHALL SPRINKLER ALL COMBUSTIBLE ABOVE-CEILING SPACES.
18. SYSTEM PIPING IS NOT PERMITTED TO BE RUN OVER ELECTRICAL PANELS OR TELECOMMUNICATIONS PANELS.
19. PIPING THAT IS WELDED IN THE FIELD OR FABRICATED SHALL BEAR THE WELDER'S IDENTIFICATION MARK OR LABEL ONTO EACH PIECE ADJACENT TO THE WELD, AND CONTRACTOR OR FABRICATOR SHALL MAINTAIN CERTIFIED RECORDS AS PER NFPA 13.

SYMBOLS LIST

Symbol	Description
	GENERAL VALVE
	GATE VALVE (NON-RISING STEM)
	OS & Y GATE VALVE
	CHECK VALVE
	BUTTERFLY VALVE
	SOLENOID VALVE
	PRESSURE REGULATING VALVE
	POST INDICATOR VALVE
	DRAIN VALVE
	BACKFLOW PREVENTER - DOUBLE CHECK VALVE
	BACKFLOW PREVENTER - REDUCED PRESSURE ZONE (RPZ)
	REDUCER
	ROOF MANIFOLD
	PRESSURE GAUGE
M	METER
	PUMP
	SPRINKLER PIPING AND BRANCH LINE - WET SYSTEM
	CAP END
	FLOW IN DIRECTION OF ARROW
	PIPE UP
	PIPE DOWN
	RISER
FDC	SIAMESE FIRE DEPARTMENT CONNECTION
FDC	FREE STANDING SIAMESE FIRE DEPARTMENT CONNECTION
WF	FLOW DETECTOR / SWITCH
TS VS	TAMPER SWITCH / VALVE SUPERVISORY SWITCH
TS VS	VALVE WITH TAMPER SWITCH / VALVE SUPERVISORY SWITCH
	THRUST BLOCK
#	HYDRAULIC NODE

ABBREVIATIONS

AFF	ABOVE FINISHED FLOOR
CLG	CEILING
(D)	DEMOLISH
DCV	DOUBLE CHECK VALVE DEVICE
DIA	DIAMETER
DN	DOWN
(E)	EXISTING
EA	EACH
FD	FLOOR DRAIN
FP	FIRE PUMP
FT.	FEET
'GC'	GENERAL CONTRACTOR
GPM	GALLONS PER MINUTE
'H'	HVAC CONTRACTOR
HP	HORSEPOWER
HZ	HERTZ
JP	JOCKEY PUMP
IN.	INCHES
KW	KILOWATTS
LBS	POUNDS
M	METER
MAX	MAXIMUM
MIN	MINIMUM
NFPA	NATIONAL FIRE PROTECTION ASSOCIATION
NTS	NOT TO SCALE
OD	OUTER DIAMETER
(P)	PROPOSED
'P'	PLUMBING CONTRACTOR
RPM	REVOLUTIONS PER MINUTE
RPZ	REDUCED PRESSURE ZONE DEVICE
TYP	TYPICAL
UD	UNDER DUCT

CONTRACT 'FP' NOTES

1. FURNISH ALL SLEEVES FOR PIPE AND CONDUIT FLOOR, WALL, PARTITION, AND ROOF PENETRATIONS FOR INSTALLATION BY CONTRACT 'G'.
2. PERFORM ALL CUTTING AND ROUGH PATCHING AS REQUIRED IN THE EXECUTION OF THE WORK. FINISH PATCHING AND FLASHING IS PART OF CONTRACT 'G'.
3. THIS CONTRACTOR SHALL BE RESPONSIBLE FOR MOTOR STARTERS FOR ALL MOTORS INCLUDED IN THIS CONTRACT UNLESS NOTED OTHERWISE. ALL STARTERS SHALL BE SIZED TO MATCH MOTOR HORSE POWER

SPRINKLER SCHEDULE

SYMBOL	MANUFACTURER	MODEL	TYPE	SIN	K-FACTOR	SIZE	TEMPERATURE	COVERAGE	REQUIRED FLOW (GPM)	REQUIRED PRESSURE	FINISH
⊙	VIKING	MICROFAST QUICK RESPONSE	UPRIGHT	VK300	5.6	1/2"	155 DEG. F	REFER TO LISTING	REFER TO LISTING	7 PSI	BRASS
●	VIKING	MIRAGE QUICK RESPONSE	CONCEALED PENDENT	VK462	5.6	1/2"	155 DEG. F	REFER TO LISTING	REFER TO LISTING	7 PSI	WHITE COVERPLATE

LIGHT HAZARD

APPLICABLE AREAS	OFFICE, CORRIDOR, CLASSROOMS, ETC.
DESIGN DENSITY	0.1 GPM PER SQ. F.T
AREA OF APPLICATION	1,500 SQ. FT.
HOSE DEMAND	100 GPM FOR 30-60 MINUTES

PROJECT INFORMATION

CONSTRUCTION TYPE	IIB
OCCUPANCY	I.E.: E
SPRINKLER SYSTEM TYPE	13 - 2016

H2M architects + engineers
538 Broad Hollow Road, 4th Floor East
Melville, NY 11747
631.756.8000 • www.h2m.com
Land Surveying Certificate of Authorization No.: 0018178
Engineering Certificate of Authorization No.: 0018438

CONSULTANTS:

MARK	DATE	DESCRIPTION

10/31/2027 Exp. Date
JONATHAN R. MURATOR, P.E.
NY PROFESSIONAL ENGINEER Lic. No. 096440
"ALTERATION OF THIS DOCUMENT EXCEPT BY A LICENSED PROFESSIONAL IS ILLEGAL"

DESIGNED BY:	DRAWN BY:	CHECKED BY:	REVIEWED BY:
CJM	CJM	JRM	

PROJECT No:	DATE:	SCALE:
WPSD2203	MARCH 2025	AS SHOWN

CLIENT
WHITE PLAINS CITY SCHOOL DISTRICT

HIGH SCHOOL ADDITION

66-22-00-01-0-016-030

CONTRACT
CONTRACT P
PLUMBING CONSTRUCTION

STATUS
FINAL BID DOCUMENT

SHEET TITLE
FIRE PROTECTION
GENERAL NOTES AND SCHEDULE

DRAWING No.
FP 001.00

C:\Users\cmcdermott\Documents\WPSD2203_Central21_M_cmcdermottM42R8.rvt
2/20/2025 10:45:31 AM

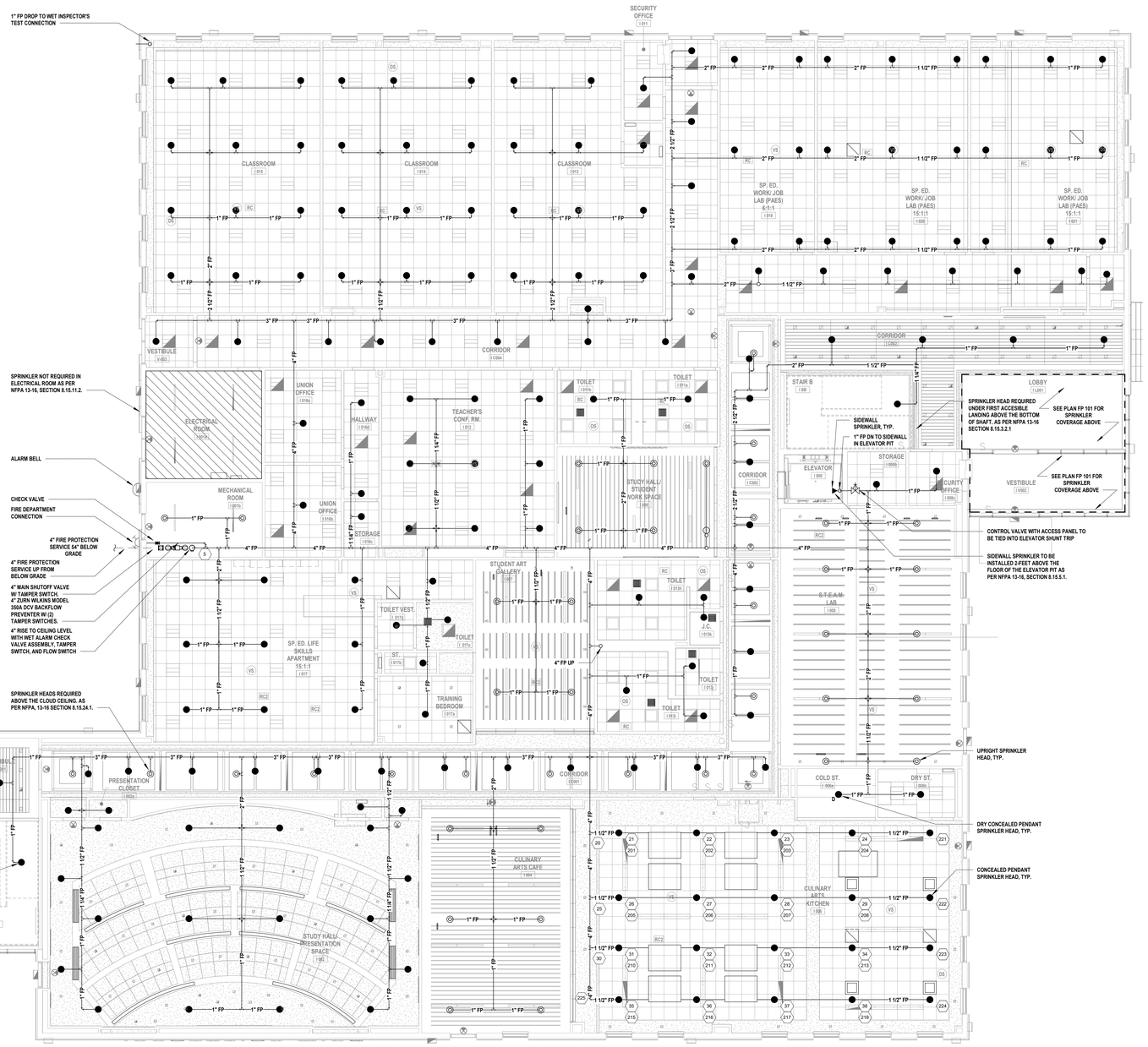

1 **Ground Floor Sprinkler Plan**
SCALE: 1/8" = 1'-0"

H2M architects + engineers
538 Broad Hollow Road, 4th Floor East
Melville, NY 11747
631.756.8000 • www.h2m.com
Land Surveying Certificate of Authorization No.: 0018178
Engineering Certificate of Authorization No.: 0018438

CONSULTANTS:

MARK	DATE	DESCRIPTION
3	01-10-2025	SED ENGINEERING ADDENDUM 3

STATE OF NEW YORK · JONATHAN RICHARD MURATOR · 086440-1 · LICENSED PROFESSIONAL ENGINEER

JONATHAN R. MURATOR, P.E.
BY PROFESSIONAL ENGINEER LIC. No. 086440

19310287 Exp. Date

THE PROVISION OF THIS DOCUMENT ONLY BY A LICENSED PROFESSIONAL ENGINEER, IS A LEGAL REQUIREMENT FOR THE DOCUMENT TO BE CONSIDERED AS SEALED.

DESIGNED BY:	DRAWN BY:	CHECKED BY:	REVIEWED BY:
CJM	CJM	JRM	-
PROJECT No: WPSD2203	DATE: MARCH 2025	SCALE: AS SHOWN	

CLIENT

WHITE PLAINS CITY SCHOOL DISTRICT

HIGH SCHOOL ADDITION

White Plains Public Schools · WP · REAL LIFE LEARNING

66-22-00-01-0-016-030

CONTRACT
CONTRACT P
PLUMBING CONSTRUCTION

STATUS
FINAL BID DOCUMENT

SHEET TITLE
FIRE PROTECTION GROUND FLOOR SPRINKLER PLAN

DRAWING No.
FP 100.01

C:\Users\cmcdermott\Documents\WPSD2203_Central21_M_cmcdermott4.rvt
2/20/2025 10:45:34 AM

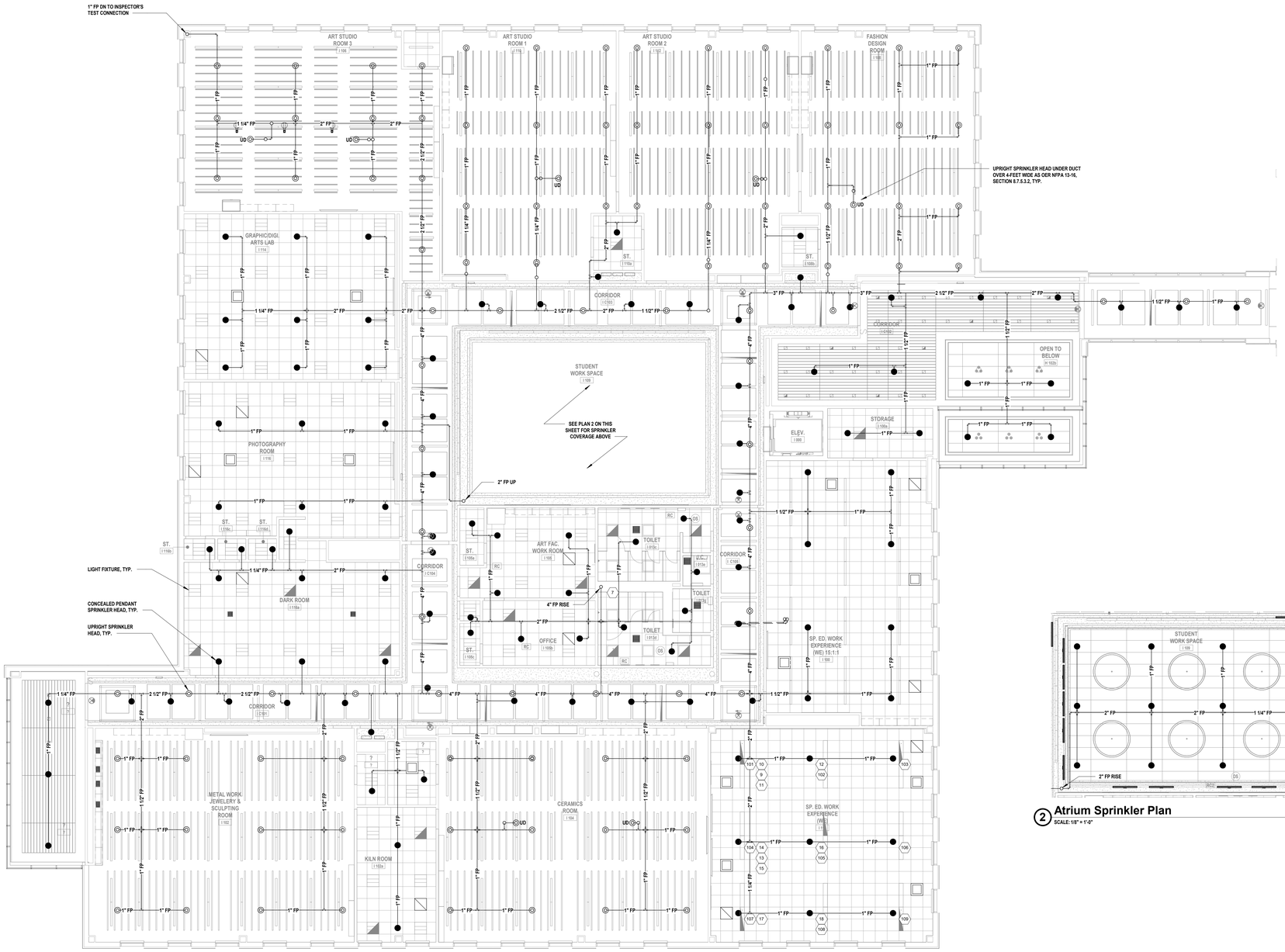

1 First Floor Sprinkler Plan
SCALE: 1/8" = 1'-0"

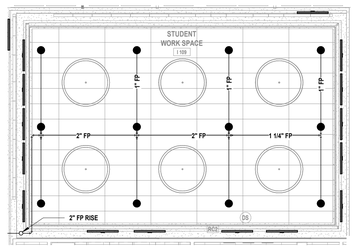

2 Atrium Sprinkler Plan
SCALE: 1/8" = 1'-0"

H2M architects + engineers

538 Broad Hollow Road, 4th Floor East
Melville, NY 11747
631.756.8000 • www.h2m.com
Land Surveying Certificate of Authorization No.: 0018178
Engineering Certificate of Authorization No.: 0018438

CONSULTANTS:

MARK	DATE	DESCRIPTION

STATE OF NEW YORK · JONATHAN RICHARD MURATOR · 086440-1 · LICENSED PROFESSIONAL ENGINEER

JONATHAN R. MURATOR, P.E.
BY PROFESSIONAL ENGINEER LIC. No. 086440
THE TRACING IS NOT THE DOCUMENT ENVISIONED BY ALLEGIANCE PROFESSIONAL, P.C. & ASSOC.
19310207 Exp. Date

DESIGNED BY:	DRAWN BY:	CHECKED BY:	REVIEWED BY:
CJM	CJM	JRM	
PROJECT No: WPSD2203	DATE: MARCH 2025	SCALE: AS SHOWN	

CLIENT
WHITE PLAINS CITY SCHOOL DISTRICT

HIGH SCHOOL ADDITION

White Plains Public Schools · REAL LIFE LEARNING

66-22-00-01-0-016-030

CONTRACT
CONTRACT P
PLUMBING CONSTRUCTION

STATUS
FINAL BID DOCUMENT

SHEET TITLE
FIRE PROTECTION
FIRST FLOOR SPRINKLER PLAN

DRAWING No.
FP 101.00

C:\Users\cmcdermott\Documents\WPSD2203_Central21_M_cmcdermottMA29B.rvt

2/20/2025 10:45:37 AM

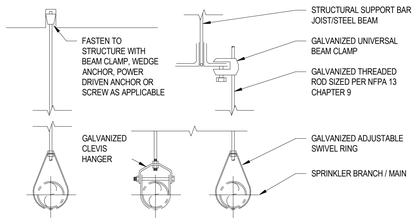

MAXIMUM DISTANCE BETWEEN HANGERS - STEEL PIPE EXCEPT THREADED LIGHTWALL									
PIPE SIZE	1 IN	1-1/4 IN	1-1/2 IN	2 IN	2-1/2 IN	3 IN	4 IN	6 IN	8 IN
SPACING	12 FT	12 FT	15 FT	15 FT	15 FT	15 FT	15 FT	15 FT	15 FT

MAXIMUM UNSUPPORTED LENGTH BETWEEN END SPRINKLER AND THE LAST HANGER			
PIPE SIZE	1 IN	1-1/4 IN	1-1/2 IN AND LARGER
SPACING	12 FT	12 FT	15 FT

REFER TO NFPA 13 FOR COMPLETE HANGER INSTALLATION REQUIREMENTS.

1 Hanger Detail
SCALE:NTS

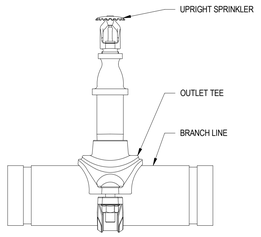

2 Upright Sprinkler Detail
SCALE:NTS

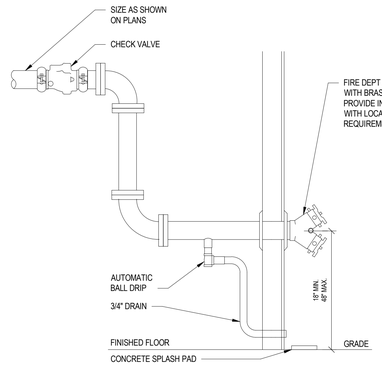

3 Fire Department Connection Detail
SCALE:NTS

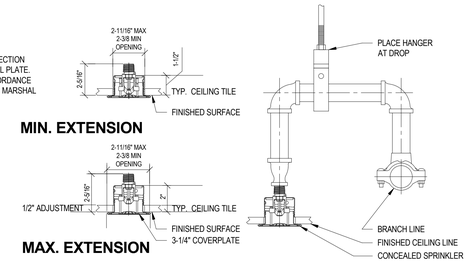

NOTES:

1. ADJUST SPRINKLER DROPS AS NECESSARY TO CLEAR OBSTRUCTIONS SUCH AS "T" BAR SUSPENSION SYSTEM, LIGHT FIXTURES, ETC. PROVIDE A PIPE HANGER IF THE HORIZONTAL OFFSET LENGTH EXCEEDS 24 INCHES.
2. THIS SPRINKLER DROP IS APPLICABLE ONLY WHERE IT IS NOT NECESSARY TO INSTALL AN UPRIGHT SPRINKLER ABOVE THE CEILING FOR PROTECTION OF COMBUSTIBLE CEILING CONSTRUCTION.

4 Concealed Pendant Sprinkler Detail
SCALE:NTS

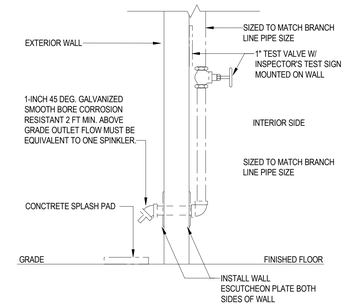

NOTES:

1. NOT LESS THAN 4 FT OF EXPOSED TEST PIPE IN WARM ROOM BEYOND VALVE.
2. PROVIDE CONCRETE SPLASH PAD BELOW OUTLET.

5 Wet System Inspector's Test Connection
SCALE:NTS

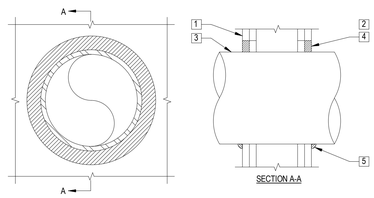

1 GYPSUM WALL ASSEMBLY (UL/cUL CLASSIFIED U300 OR U400 SERIES) (1-HR. OR 2-HR. FIRE-RATING) (2-HR. SHOWN).
2 [NOT SHOWN] WOOD STUDS TO CONSIST OF NOMINAL 2" X 4" LUMBER. STEEL STUDS TO BE MINIMUM 2-1/2" WIDE.
3 PENETRATING ITEM TO BE ONE OF THE FOLLOWING:
A. MAXIMUM 30" DIAMETER STEEL PIPE (SCHEDULE 10 OR HEAVIER).
B. MAXIMUM 30" DIAMETER CAST IRON PIPE.
C. MAXIMUM 6" NOMINAL DIAMETER COPPER PIPE.
D. MAXIMUM 6" NOMINAL DIAMETER STEEL CONDUIT.
E. MAXIMUM 4" NOMINAL DIAMETER EMT.
4 MINIMUM 5/8" DEPTH HILTI FS-ONE INTUMESCENT FIRESTOP SEALANT.
5 MINIMUM 1/2" BEAD HILTI FS-ONE INTUMESCENT FIRESTOP SEALANT APPLIED AT POINT OF CONTACT.

NOTES:

1. MAXIMUM DIAMETER OF OPENING:
   A. 32-1/4" FOR STEEL STUD WALLS.
   B. 14-1/2" FOR WOOD STUD WALLS.
2. ANNULAR SPACE = MINIMUM 0", MAXIMUM 2-1/4".
3. PIPE MAY BE INSTALLED WITH CONTINUOUS POINT OF CONTACT.
4. PIPE MAY BE INSTALLED AT AN ANGLE NOT GREATER THAN 45° FROM PERPENDICULAR.

UL/cUL SYSTEM NO. W-L-1054
F-RATING = 1-HR. OR 2-HR.

6 Metal Pipe Through Gypsum Wall Assembly Detail
SCALE:NTS

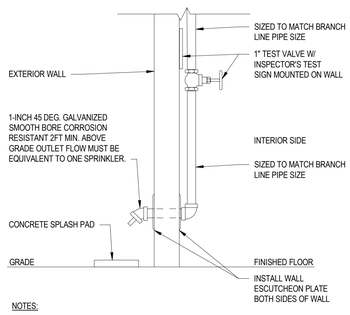

NOTES:

1. NOT LESS THAN 4 FT OF EXPOSED TEST PIPE IN WARM ROOM BEYOND VALVE.
2. PROVIDE CONCRETE SPLASH PAD BELOW OUTLET.

7 Wet System Inspector's Test Connection Detail
SCALE:NTS

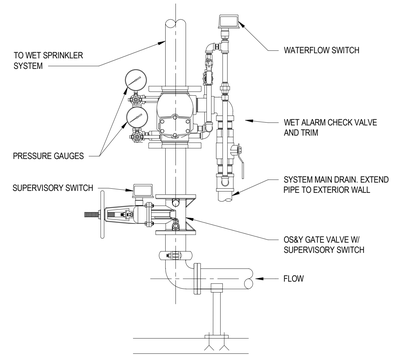

8 Wet Alarm Check Valve Detail
SCALE:NTS

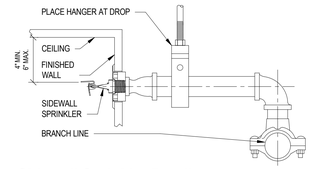

9 Sidewall Sprinkler Detail
SCALE:NTS

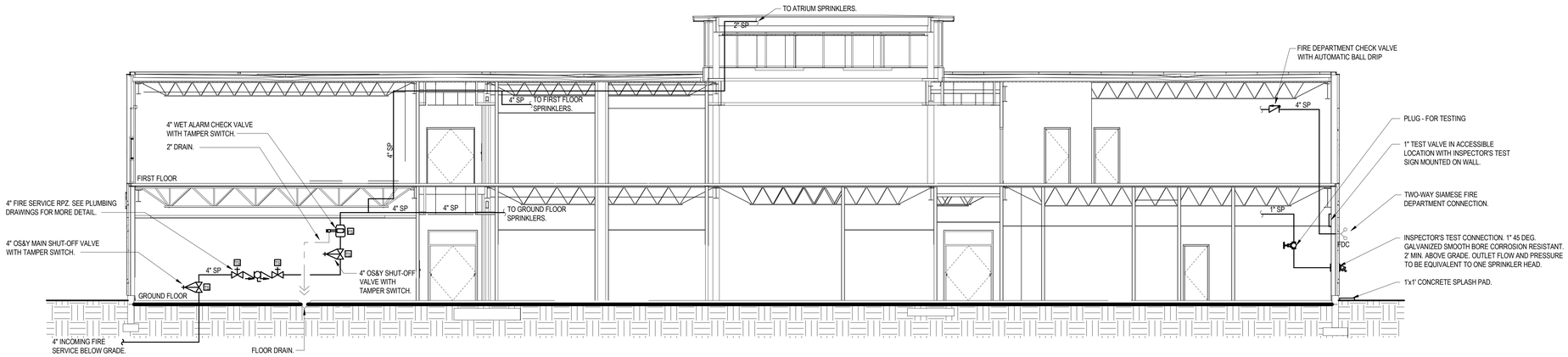

10 Fire Protection Riser Diagram
SCALE: NTS

NOTES:

1. FOR SIZES OF FEED MAINS, CROSS MAINS AND BRANCH LINES, SEE FIRE SPRINKLER REFLECTED CEILING PLANS.

H2M architects + engineers
538 Broad Hollow Road, 4th Floor East
Melville, NY 11747
631.756.8000 • www.h2m.com
Land Surveying Certificate of Authorization No.: 0018178
Engineering Certificate of Authorization No.: 0018438

CONSULTANTS:

MARK	DATE	DESCRIPTION

STATE OF NEW YORK · JONATHAN RICHARD MURATOR · 086440-1 · LICENSED PROFESSIONAL ENGINEER

JONATHAN R. MURATOR, P.E. — 10/31/2027 Exp. Date
BY PROFESSIONAL ENGINEER LL No. 086440
"ALTERATION OF THIS DOCUMENT EXCEPT BY LICENSED PROFESSIONAL IS ILLEGAL"

DESIGNED BY:	DRAWN BY:	CHECKED BY:	REVIEWED BY:
CJM	CJM	JRM	-
PROJECT No: WPSD2203	DATE: MARCH 2025	SCALE: AS SHOWN	

CLIENT
WHITE PLAINS CITY SCHOOL DISTRICT

HIGH SCHOOL ADDITION

White Plains Public Schools · WP · REAL LIFE LEARNING

66-22-00-01-0-016-030

CONTRACT
CONTRACT P
PLUMBING CONSTRUCTION

STATUS
FINAL BID DOCUMENT

SHEET TITLE
FIRE PROTECTION BUILDING SPRINKLER DETAILS

DRAWING No.
FP 500.00

C:\Users\cmodermott\Documents\WPSD2203_Central21_M_cmodermott94258.rvt
2/20/2025 10:45:38 AM

LEGEND

SYMBOL	DESCRIPTION
	PIPING UP
	PIPING DOWN
	PIPING RISE OR DROP
	BRANCH-TOP CONNECTION
	BRANCH-BOTTOM CONNECTION
	REDUCER
CO CO	CLEANOUT
	FLOOR CLEANOUT
	CAPPED PIPE
M	METER
	FLOOR DRAIN
	AQUASTAT
	PUMP
	STRAINER
	UNION
	THERMOSTATIC MIXING VALVE
	BALANCING VALVE (BLV)
	GLOBE VALVE (GLV)
	CHECK VALVE (CV)
	GAS COCK, GAS STOP
	BALL VALVE (BV)
	BUTTERFLY VALVE (BFV)
S	SOLENOID VALVE
	PRESSURE-REDUCING VALVE (PRV)
	GATE VALVE (GV)
	PRESSURE-RELIEF VALVE (RV)
	BACKFLOW PREVENTER
	FROST FREE HOSE BIBB
	HOSE BIBB
	RECESSED-BOX HOSE BIBB OR WALL HYDRANT
	EXPANSION JOINT
	WATER HAMMER ARRESTER
	VALVE IN RISER
CO	WALL CLEANOUT (WCO)
	PITCH DOWN OR UP IN DIRECTION OF ARROW
	FLOW IN DIRECTION OF ARROW
	COLD WATER (CW)
	TEMPERED WATER (TW)
	HOT WATER (HW)
	TEMPERED WATER RETURN (TWR)
	HOT WATER RETURN (HWR)
	WASTE PIPING (W,S,OW)
	BELOW SLAB WASTE PIPING
	VENT PIPING (V)
	GAS PIPING (G)
	TO BE REMOVED
	POINT OF CONNECTION
	POINT OF DISCONNECTION

ABBREVIATIONS

AFF	ABOVE FINISHED FLOOR
BTU	BRITISH THERMAL UNIT
BTUH	BTU PER HOUR
CLG	CEILING
CO	CLEAN OUT
CODP	CLEAN OUT DECK PLATE
COWP	CLEAN OUT WALL PLATE
CW	COLD WATER
(D)	DEMOLISH
DCV	DOUBLE CHECK VALVE DEVICE
DEG. F	° FAHRENHEIT
DIA	DIAMETER
DN	DOWN
(E)	EXISTING
EA	EACH
FAI	FRESH AIR INTAKE
FD	FLOOR DRAIN
G	GAS
'GC'	GENERAL CONSTRUCTION CONTRACTOR
GPM	GALLONS PER MINUTE
GPH	GALLONS PER HOUR
'H'	HVAC CONTRACTOR
HP	HORSEPOWER
HW	HOT WATER
HWR	HOT WATER RETURN
IN.	INCHES
IN. W.C. (W.G.)	INCHES WATER COLUMN (WATER GAUGE)
KW	KILOWATTS
LBS	POUNDS
M	METER
MAX	MAXIMUM
MIN	MINIMUM
NTS	NOT TO SCALE
OD	OUTER DIAMETER
(P)	PROPOSED
'P'	PLUMBING CONTRACTOR
PD	PRESSURE DROP
RD	ROOF DRAIN
RPM	REVOLUTIONS PER MINUTE
RPZ	REDUCED PRESSURE ZONE
SAN / S	SANITARY
ST	STORM DRAIN
TEMP	TEMPERATURE
TYP	TYPICAL
TW	TEMPERED WATER (110°F)
TWR	TEMPERED WATER RETURN
V	VENT
VTR	VENT THROUGH ROOF
W	WASTE

GENERAL PLUMBING NOTES

1. PROVIDE ALL MATERIALS AND EQUIPMENT AND PERFORM ALL LABOR REQUIRED TO INSTALL COMPLETE AND OPERABLE PLUMBING SYSTEMS AS INDICATED ON THE DRAWINGS, AS SPECIFIED AND AS REQUIRED BY CODE.
2. THE CONTRACTOR, BY PRESENTING THEIR BID FOR THE WORK, REPRESENTS THAT HE/SHE HAS INSPECTED THE SITE AND IS COMPLETELY FAMILIAR WITH THE SCOPE OF WORK AND ALL FIELD CONDITIONS RELATED TO, AND AFFECTING THE WORK AND ITS PERFORMANCE. EXCEPTIONS AFFECTING THE WORK AND ITS PERFORMANCE, OR CONFLICTS BETWEEN FIELD CONDITIONS, SHALL BE BROUGHT TO THE ATTENTION OF THE ARCHITECT/ENGINEER PRIOR TO THE SUBMISSION OF BIDS.
3. PERFORM ALL WORK IN ACCORDANCE WITH THE 2020 PLUMBING CODE OF NEW YORK STATE (PCNYS), MECHANICAL (MCNYS), ENERGY CONSERVATION CONSTRUCTION CODE OF NEW YORK STATE (ECCCNYS) CODE AND THE REQUIREMENTS OF THE LOCAL AUTHORITIES HAVING JURISDICTION.
4. APPLY FOR AND SECURE ALL REQUIRED PERMITS AND INSPECTIONS AND PAY ALL COSTS FOR THE SAME.
5. DO NOT SCALE DRAWINGS. DRAWINGS FOR PLUMBING WORK ARE DIAGRAMMATIC AND ARE INTENDED TO CONVEY SCOPE AND GENERAL ARRANGEMENT ONLY. THE LOCATIONS OF ALL ITEMS SHOWN ON THE DRAWINGS OR CALLED FOR IN THE SPECIFICATIONS THAT ARE NOT DEFINITELY FIXED BY DIMENSIONS ARE APPROXIMATE.
6. COORDINATE CONTRACT DOCUMENTS PROJECT REQUIREMENTS, WORK OF OTHERS, AND EQUIPMENT AND MATERIALS PURCHASED WITH FIELD DIMENSIONS, MANUFACTURERS REQUIREMENTS FOR INSTALLATION, OPERATION, AND MAINTENANCE, CONTRACTORS INTENDED MEANS AND METHODS OF INSTALLATION AND CONTRACTORS FABRICATED ITEMS TO ENSURE A PROPER "FIT" AND INSTALLATION. BRING ANY CONFLICTS TO THE ATTENTION OF THE ARCHITECT/ENGINEER DURING THE SUBMITTAL PHASE FOR RESOLUTION PRIOR TO PURCHASING ANY EQUIPMENT.
7. FIELD VERIFY AND COORDINATE ALL PIPING DIMENSIONS BEFORE FABRICATION. MAKE MODIFICATIONS IN THE LAYOUT AS NEEDED TO PREVENT CONFLICT WITH WORK OF OTHER TRADES OR FOR PROPER EXECUTION OF THE WORK. OBTAIN THE APPROVAL OF THE ARCHITECT/ENGINEER FOR MODIFICATIONS.
8. PROVIDE PRODUCTS OF ONE MANUFACTURER WHERE TWO OR MORE ITEMS OF THE SAME TYPE OF MATERIAL OR EQUIPMENT IS REQUIRED.
9. INSTALL ALL EQUIPMENT AND APPURTENANCES IN ACCORDANCE WITH MANUFACTURER'S RECOMMENDATIONS, CONTRACT DOCUMENTS, AND APPLICABLE CODES AND REGULATIONS. REFER TO DETAILS FOR ADDITIONAL PIPING AND EQUIPMENT INSTALLATION REQUIREMENTS.
10. LOCATE ALL TEMPERATURE, PRESSURE, AND FLOW MEASURING DEVICES IN ACCESSIBLE LOCATIONS WITH STRAIGHT SECTION OF PIPE UP- AND DOWNSTREAM AS RECOMMENDED BY THE MANUFACTURER TO ENSURE MANUFACTURER CERTIFIED ACCURACY.
11. COORDINATE ALL EQUIPMENT CONNECTIONS WITH MANUFACTURER'S CERTIFIED DRAWINGS. COORDINATE AND PROVIDE ALL PIPING TRANSITIONS REQUIRED FOR FINAL CONNECTIONS TO EQUIPMENT.
12. COORDINATE LOCATIONS AND SIZES OF ALL FLOOR, WALL, AND ROOF OPENINGS WITH ALL OTHER TRADES. COORDINATE ALL PIPING AND EQUIPMENT SUPPORTED FROM STRUCTURE WITH GENERAL CONSTRUCTION WORK.
13. COMPLETE ALL PRESSURE TESTS BEFORE ANY PLUMBING EQUIPMENT, OR PIPING INSULATION IS APPLIED.
14. MAKE ALL ATTACHMENTS TO JOISTS, TRUSSES, OR JOIST GIRDERS AT PANEL POINTS. PROVIDE BEAM CLAMPS MEETING MSS STANDARDS. THE USE OF C-CLAMPS IS NOT PERMITTED.
15. PROVIDE CONCRETE PADS A MINIMUM OF 4 INCHES HIGH FOR ALL FLOOR MOUNTED EQUIPMENT. EXTEND PAD 4 INCHES BEYOND THE EQUIPMENT ON ALL SIDES.
16. INSTALL PIPING, AND CONDUIT CONCEALED IN AREAS HAVING HUNG CEILINGS AND/OR FURRED SPACES UNLESS OTHERWISE INDICATED ON THE DRAWINGS.
17. REFER TO ARCHITECTURAL DRAWINGS FOR EXACT LOCATION OF ALL ACCESSIBLE FIXTURES. MOUNT ALL SUCH FIXTURES IN ACCORDANCE WITH THE REQUIREMENTS OF THE AUTHORITY HAVING JURISDICTION.
18. PROVIDE ACCESS DOORS IN WALLS, PARTITIONS, AND CEILINGS AS REQUIRED TO MAKE VALVES, WATER HAMMER ARRESTERS, ETC. READILY ACCESSIBLE.
19. ARRANGE FOR, COORDINATE, AND MAKE CONNECTION TO ALL SERVICES PROVIDED BY OTHERS. CONFORM TO ALL REQUIREMENTS APPLICABLE TO CONNECTIONS IMPOSED BY UTILITY COMPANIES AND AUTHORITIES HAVING JURISDICTION.
20. INSTALL FIXTURES AND EQUIPMENT WITH VALVES, UNIONS, ETC. TO ALLOW FOR EASE OF SERVICE AND/OR REMOVAL.
21. PROVIDE A CLEANOUT AT THE BASE OF WASTE AND VENT STACKS WITH FINISHED WALL PLATE IN FINISHED WALLS.
22. FURNISH AND INSTALL WATER PRESSURE REDUCING VALVE AND PRESSURE RELIEF VALVE IN ACCORDANCE WITH THE PLUMBING CODE OF NEW YORK STATE ON ALL INCOMING DOMESTIC WATER SYSTEMS IN EXCESS OF 80 P.S.I.G.
23. SLOPE ALL VENT PIPING TO DRAIN BACK TO THE DRAINAGE SYSTEM.
24. FLUSH AND DISINFECT ALL DOMESTIC POTABLE WATER PIPING AND TEST THE WATER IN ACCORDANCE WITH THE PLUMBING CODE OF NEW YORK STATE. PROVIDE CERTIFICATE OF PERFORMANCE AND LABORATORY TEST REPORT TO LOCAL AUTHORITIES HAVING JURISDICTION AND OBTAIN THEIR APPROVAL.
25. PROVIDE WATER HAMMER ARRESTORS AT ALL QUICK CLOSING FIXTURE VALVE LOCATIONS.
26. ALL PIPING, VALVES AND FITTINGS USED FOR POTABLE WATER SHALL BE NSF 61/372 COMPLIANT AND BE TESTED FOR LOW LEAD.
27. ANY PENETRATIONS THROUGH AIR BARRIER SHALL BE SEALED AS PER 2020 BCNYS AND COMMERCIAL PROVISIONS .
28. ALL PIPING IN PLENUM SPACES SHALL BE CAST IRON FOR SANITARY, STORM, VENT SYSTEMS, AND COPPER PIPING FOR DOMESTIC SYSTEMS, AND STEEL PIPING FOR GAS SYSTEMS. NO PLASTIC PIPING ALLOWED.
29. HOT WATER TEMPERATURE FOR ALL PUBLIC HAND WASHING FIXTURES SHALL BE TEMPERED TO A MAXIMUM TEMPERATURE OF 110 DEGREES F.
30. ALL FIXTURES SHALL MEET THE WATER CONSERVATION REQUIREMENTS LISTED IN THE TABLE 604.4 OF THE 2020 PLUMBING CODE OF NEW YORK STATE.
31. ALL FIXTURES THAT HAS THE ABILITY TO HAVE A HOSE CONNECTED TO IT, OR DIRECT CONNECTED FIXTURES, SHALL HAVE A BACKFLOW PREVENTION DEVICE ON THE FAUCET, VACUUM BREAKER (ASSE 1052 AND ASME A112.21.3).
32. ALL SANITARY FITTINGS SHALL BE 'WYE' TYPE AND SHALL FOLLOW THE DIRECTION OF FLOW.
33. IN THE EVENT THAT THERE IS A DISCREPANCY BETWEEN DESIGN PLANS, RISER DIAGRAMS, AND/OR SPECIFICATIONS CONCERNING PIPE SIZES, FIXTURES, AND/OR EQUIPMENT, THE MOST STRINGENT REQUIREMENTS SHALL BE APPLIED TO THE PROJECT.
34. FIRE STOP ALL OPENINGS IN FIRE RATED CONSTRUCTION FOR PIPING, CONDUIT, ETC.
35. MAINTAIN MAXIMUM HEADROOM AND SPACE CONDITIONS AT ALL POINTS. WHERE HEADROOM AND SPACE CONDITIONS APPEAR INADEQUATE, NOTIFY ARCHITECT PRIOR TO PROCEEDING WITH INSTALLATION. MAINTAIN A MINIMUM OF 6'-8" CLEARANCE FROM FINISHED FLOOR TO UNDERSIDE OF PIPES, CONDUITS, SUSPENDED EQUIPMENT, ETC., THROUGHOUT ACCESS ROUTES IN MECHANICAL ROOMS.
36. CORE DRILL ALL PENETRATIONS THROUGH CONCRETE FLOORS, WALLS, AND FOOTINGS.
37. INSTALL LINK SEAL TYPE PROTECTION FOR WATER RESISTANT SEALS AT ALL SLAB AND BELOW GROUND WALL FOOTING PENETRATIONS.
38. COVER ALL COPPER PIPING BELOW SLAB WITH *ARMAFLEX* TYPE INSULATION.

ENERGY NOTES

2020 ENERGY CONSERVATION CONSTRUCTION CODE OF NEW YORK STATE NOTES: STATEMENT OF COMPLIANCE:

TO THE BEST OF MY KNOWLEDGE, AND PERSONAL JUDGEMENT, THESE PLANS AND SPECIFICATIONS ARE IN COMPLIANCE WITH THE 2020 NEW YORK STATE ENERGY CONSERVATION CODE (ECCCNYS).

1. SERVICE WATER HEATING EQUIPMENT PERFORMANCE EFFICIENCY:
   1.1. WATER HEATING EQUIPMENT AND HOT WATER STORAGE TANKS SHALL MEET THE REQUIREMENTS OF TABLE C404.2 IN THE 2020 ECCCNYS. (ECCCNYS C404.2)
   1.2. SERVICE WATER HEATING SHALL BE COMMISSIONED AND COMPLETED IN ACCORDANCE WITH SECTION C408.2 OF THE 2020 ECCCNYS.
2. TEMPERATURE CONTROL:
   2.1. SERVICE WATER HEATING EQUIPMENT SHALL BE PROVIDED WITH CONTROLS ALLOWING A SETPOINT OF 110°F AND 90 °F FOR OTHER OCCUPANCIES. PUBLIC REST ROOM LAVATORIES SHALL HAVE A MAXIMUM OUTLET TEMPERATURE OF 110°F.
   2.2. WHERE WATER HEATING EQUIPMENT SERVING NONCIRCULATING SYSTEMS IS NOT SUPPLIED WITH INTEGRAL HEAT TRAPS, HEAT TRAPS SHALL BE PROVIDED ON THE SUPPLY AND DISCHARGE PIPING. (ECCCNYS C404.3)
3. PIPE INSULATION:
   3.1. AUTOMATIC CIRCULATING HOT WATER SYSTEM PIPING SHALL BE INSULATED WITH 1 INCH OF INSULATION WITH A CONDUCTIVITY NOT EXCEEDING 0.27 BTU PER INCH, OR THE INSULATION REQUIREMENTS, WHICHEVER IS GREATER. THE FIRST 8 FT OF PIPING IN NONCIRCULATING SYSTEMS WITH EQUIPMENT WITHOUT INTEGRAL HEAT TRAPS SHALL BE INSULATED WITH 0.5 INCH OF MATERIAL HAVING A CONDUCTIVITY NOT EXCEEDING 0.27 BTU PER INCH, OR THE INSULATION REQUIREMENTS, WHICHEVER IS GREATER. (ECCCNYS C404.5)
   3.2. ALL PIPING TO BE INSULATED WITH 0.21-0.28 CONDUCTIVITY
   3.3. COLD WATER PIPING - ALL SIZES - 1-INCH INSULATION, A.S. JACKET.
   3.4. STORM DRAINAGE PIPING ALL HORIZONTAL RUNS AND DRAIN BODY - MINIMUM 1-INCH INSULATION, A.S. JACKET.
   3.5. HOT WATER PIPING (140°F) AND TEMPERED WATER PIPING (110°F)
      3.5.1. PIPE SIZE: < 1" INSULATION: 1"
      3.5.2. PIPE SIZE: 1" TO < 1-1/2" INSULATION: 1"
      3.5.3. PIPE SIZE: 1-1/2 TO < 4" INSULATION: 1.5"
      3.5.4. PIPE SIZE: 4" TO < 8" INSULATION: 1.5"
4. HOT WATER SYSTEM CONTROLS:
   4.1. CIRCULATING HOT WATER SYSTEM PUMPS OR HEAT TRACE SHALL BE ARRANGED TO BE TURNED OFF EITHER AUTOMATICALLY OR MANUALLY WHEN THERE IS LIMITED HOT WATER DEMAND. READY ACCESS SHALL BE PROVIDED TO THE OPERATING CONTROLS. (ECCCNYS C404.6)
5. PIPE VOLUME AND MAXIMUM LENGTHS
   5.1. PER SECTION OF C404.5.1 OF THE 2020 ECCCNYS, ALL MAXIMUM PIPE LENGTHS FROM FIXTURES SHALL COMPLY WITH THE MAXIMUM PIPE LENGTHS ON THE CHART BELOW. CONTRACTOR TO ENSURE HOT WATER RETURN PIPING IS INSTALLED AS PER PLANS AND THAT THESE LENGTHS ARE MAINTAINED.

NOMINAL PIPE SIZE (INCHES)	VOLUME (LIQUID OUNCES PER FOOT LENGTH)	MAXIMUM PIPING LENGTH (FEET)	
		PUBLIC LAVATORY FAUCETS	OTHER FIXTURES AND APPLIANCES
1/4"	0.33	6	50
5/16"	0.5	4	50
3/8"	0.75	3	50
1/2"	1.5	2	43
5/8"	2	1	32
3/4"	3	0.5	21
7/8"	4	0.5	16
1"	5	0.5	13
1-1/4"	8	0.5	8
1-1/2"	11	0.5	6
2" OR LARGER	18	0.5	4

FUEL GAS NOTES

1. PERFORM ALL WORK IN ACCORDANCE WITH NFPA 54 - NATIONAL FUEL GAS CODE, THE 2020 FUEL GAS CODE OF NEW YORK STATE (FGCNYS), 2015 NATIONAL GRID BLUE BOOK, 2018 CONEDISON YELLOW BOOK, 2017 PSEG NJ BOOK, AND THE REQUIREMENTS OF THE LOCAL AUTHORITIES HAVING JURISDICTION.
2. THE DEPTH OF COVER FOR ALL GAS SERVICE PIPING SHALL BE 24 INCHES.
3. THE WATER SERVICE SHALL BE KEPT A MINIMUM OF 10-FEET FROM THE INCOMING GAS SERVICE MEASURED IN ANY DIRECTION.
4. IF ELECTRIC AND GAS SHARE A COMMON TRENCH, THE TRENCH MUST BE WIDE ENOUGH TO MAINTAIN A 6-INCH MINIMUM SEPARATION DISTANCE.
5. LOCATION OF PROPOSED GAS METER ON CONTRACT DOCUMENTS ARE SUBJECT TO CHANGE BY THE LOCAL UTILITY COMPANY
6. REFER TO THE LOCAL UTILITY COMPANY HANDBOOKS FOR METER RIG CONSTRUCTION DETAILS, RULES AND REGULATIONS. THIS INCLUDES, BUT NOT LIMITED TO LOCATION OF STEP DOWN REGULATORS, METER SIZE AND SET LENGTHS, VENTING OF REGULATORS, BYPASS PIPING, BOLLARD REQUIREMENTS, CONCRETE PAD, SUPPORTS, AND SHUT OFF VALVES.
7. GAS PIPING:
   7.1. INDOOR - STEEL PIPE- SCHEDULE 40 WITH WELDED OR THREADED JOINTS. THREADED JOINTS SHALL BE 150 POUND MALLEABLE IRON, FORGED STEEL, BLACK IRON, OR GALVANIZED STEEL.
   7.2. OUTDOOR - ABOVE GROUND - GALVANIZED PIPE OR PROPERLY COATED BLACK STEEL PIPE WITH SCREWED OR THREADED JOINTS.
   7.3. BELOW GRADE - STEEL PIPE- MILL WRAPPED SCHEDULE 40 WITH WELDED OR THREADED JOINTS
   7.4. WELDED JOINTS MUST BE USED FOR GAS PIPING LARGER THAN 4-INCH, OR 3-INCH FOR SCHOOLS.
8. GAS PIPING ENTERING A BUILDING SHALL BE ABOVE GRADE. PENETRATIONS THROUGH BURIED WALLS ARE NOT PERMITTED.
9. WHERE GAS PIPING IS INSTALLED BELOW GRADE INSIDE A BUILDING, THE GAS PIPING MUST BE INSTALLED IN A CONDUIT AND BE VENTED TO THE EXTERIOR.
10. GAS PRESSURE TEST:
   10.1. GALVANIZED OR BARE STEEL - UP TO 14" W.C. - AIR AT 3 PSIG FOR 30 MINUTES - AIR AT 15 PSIG FOR 1-HOUR (SED)
   10.2. GALVANIZED OR BARE STEEL - GREATER THAN 14" W.C. - AIR AT 50 PSIG FOR 30 MINUTES - AIR AT 1.5 TIMES THE WORKING PRESSURE FOR 1-HOUR (SED)
   10.3. COATED OR WRAPPED - LESS THAN 2-INCH - AIR AT 90 PSIG FOR 1-HOUR - ALL SIZES - AIR AT 100 PSIG FOR 1-HOUR (SED)
   10.3. COATED OR WRAPPED - 2-INCH TO 12-INCH - AIR AT 90 PSIG FOR 4-HOURS
11. SUPPLY ALL GAS-FIRED EQUIPMENT WITH GAS PIPING AS PER THE NEW YORK STATE FUEL GAS CODE. PROVIDE EACH PIECE OF EQUIPMENT WITH A DIRT LEG, UNION AND GAS COCK. PROVIDE A VENTED REGULATOR IF EQUIPMENT REQUIRES LOWER THAN LINE GAS PRESSURE.
12. PROVIDE VEHICLE IMPACT PROTECTION FOR NEW METER HEADER. BOLLARDS SHALL BE SPACED NO MORE THAN 4-FEET BETWEEN POSTS ON CENTER AND LOCATED NOT LESS THAN 3-FEET FROM THE PROTECTED OBJECT.
13. SHUTOFF VALVES INSTALLED IN TUBING SYSTEMS MUST BE RIGIDLY AND SECURELY SUPPORTED INDEPENDENTLY OF THE TUBING.
14. ALL COOKING APPLIANCE CONNECTIONS MUST BE LISTED AND LABELED.

MANUAL GAS VALVE STANDARDS

VALVE STANDARDS	APPLIANCE SHUTOFF VALVE APPLICATION UP TO 1/2 PSIG PRESSURE	OTHER VALVE APPLICATIONS		
		UP TO 1/2 PSIG PRESSURE	UP TO 2 PSIG PRESSURE	UP TO 5 PSIG PRESSURE
ANSI Z21.15/CGA9.1	X	–	–	–
ASME B16.44	X	X*	X**	–
ASME B16.33	X	X	X	X

NOTES:
1. FOR SI: 1 POUND PER SQUARE INCH GAUGE = 6.895 kPa.
2. X* IF LABELED 2G
3. X** IF LABELED 5G

LEAD FREE NOTE:

1. ALL FAUCETS, FITTINGS, AND VALVES MUST COMPLY WITH NSF 61 AND ASTM 372 FOR LOW LEAD PERCENTAGE.
2. CONTRACTOR SHALL BE RESPONSIBLE TO DEMONSTRATE COMPLIANCE WITH THE NYS DEPARTMENT OF HEALTH LEAD IN WATER REGULATION (10 NYCRR 67-4).
3. AT THE CONCLUSION OF NEW PLUMBING WORK, THE CONTRACTOR SHALL BE RESPONSIBLE TO PROVIDE THE SERVICES OF A THIRD PARTY NYS LICENSED ENVIRONMENTAL TESTING LABORATORY TO PROVIDE LEAD TESTING AT ALL NEW LAVATORIES, SINKS, SHOWERS, DRINKING FOUNTAINS AND ALL OTHER FIXTURES WHERE WATER MAY BE CONSUMED FOR DRINKING. TWO COPIES OF THE REPORT MUST BE SUBMITTED, ONE COPY TO THE ENGINEER AND THE OTHER ONE TO THE OWNER.

H2M architects + engineers

538 Broad Hollow Road, 4th Floor East
Melville, NY 11747
631.756.8000 ▪ www.h2m.com
Land Surveying Certificate of Authorization No.: 0018178
Engineering Certificate of Authorization No.: 0018438

CONSULTANTS:

MARK	DATE	DESCRIPTION

STATE OF NEW YORK · JONATHAN RICHARD MURATORE · 096440-1 · LICENSED PROFESSIONAL ENGINEER

10/31/2027 Exp. Date
JONATHAN R. MURATOR, P.E.
NY PROFESSIONAL ENGINEER Lic. No. 096440

"ALTERATION OF THIS DOCUMENT EXCEPT BY A LICENSED PROFESSIONAL IS ILLEGAL"

DESIGNED BY:	DRAWN BY:	CHECKED BY:	REVIEWED BY:
CJM	CJM	JRM	º

PROJECT No:	DATE:	SCALE:
WPSD2203	MARCH 2025	AS SHOWN

CLIENT
WHITE PLAINS CITY SCHOOL DISTRICT

HIGH SCHOOL ADDITION

66-22-00-01-0-016-030

CONTRACT
CONTRACT P
PLUMBING CONSTRUCTION

STATUS
FINAL BID DOCUMENT

SHEET TITLE
PLUMBING
GENERAL NOTES, LEGEND, ABBREVIATIONS

DRAWING No.
P 001.00

C:\Users\cmcdermott\Documents\WPSD2203_Central21_M_cmcdermottM42R8.rvt
2/20/2025 10:45:38 AM

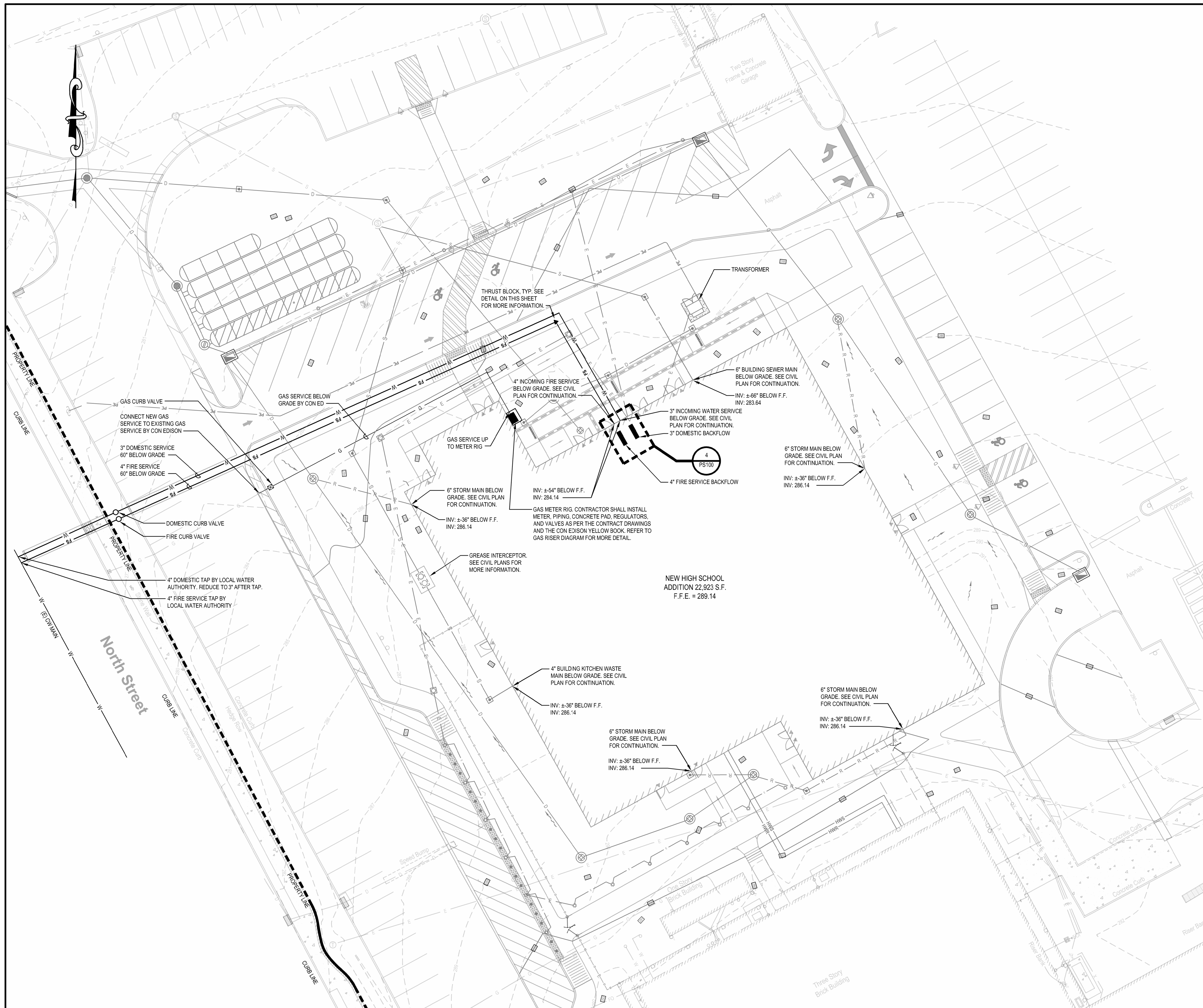

1 **Domestic Service Backflow Prevention Detail**
SCALE: NTS

GRAPHIC SCALE
20 0 10 20
(IN FEET)
1 inch = 20 ft.

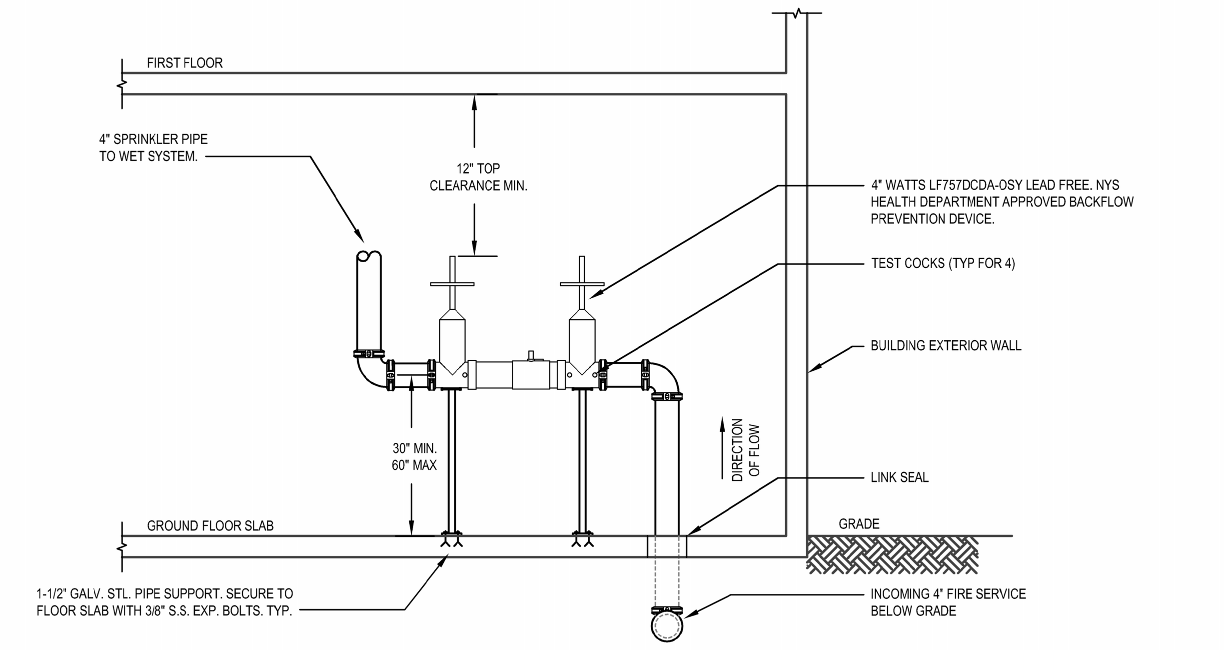

2 **Fire Service Backflow Prevention Detail**
SCALE: NTS

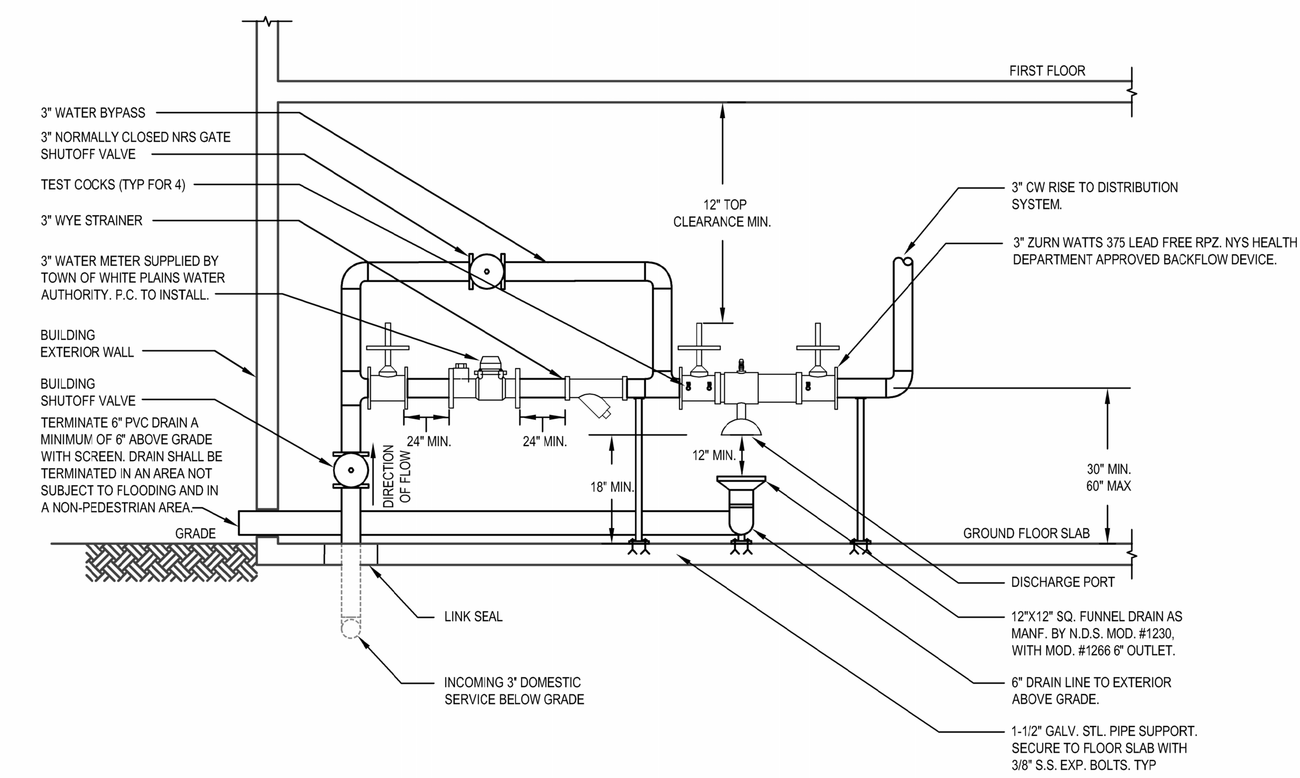

3 **Domestic Service Backflow Prevention Detail**
SCALE: NTS

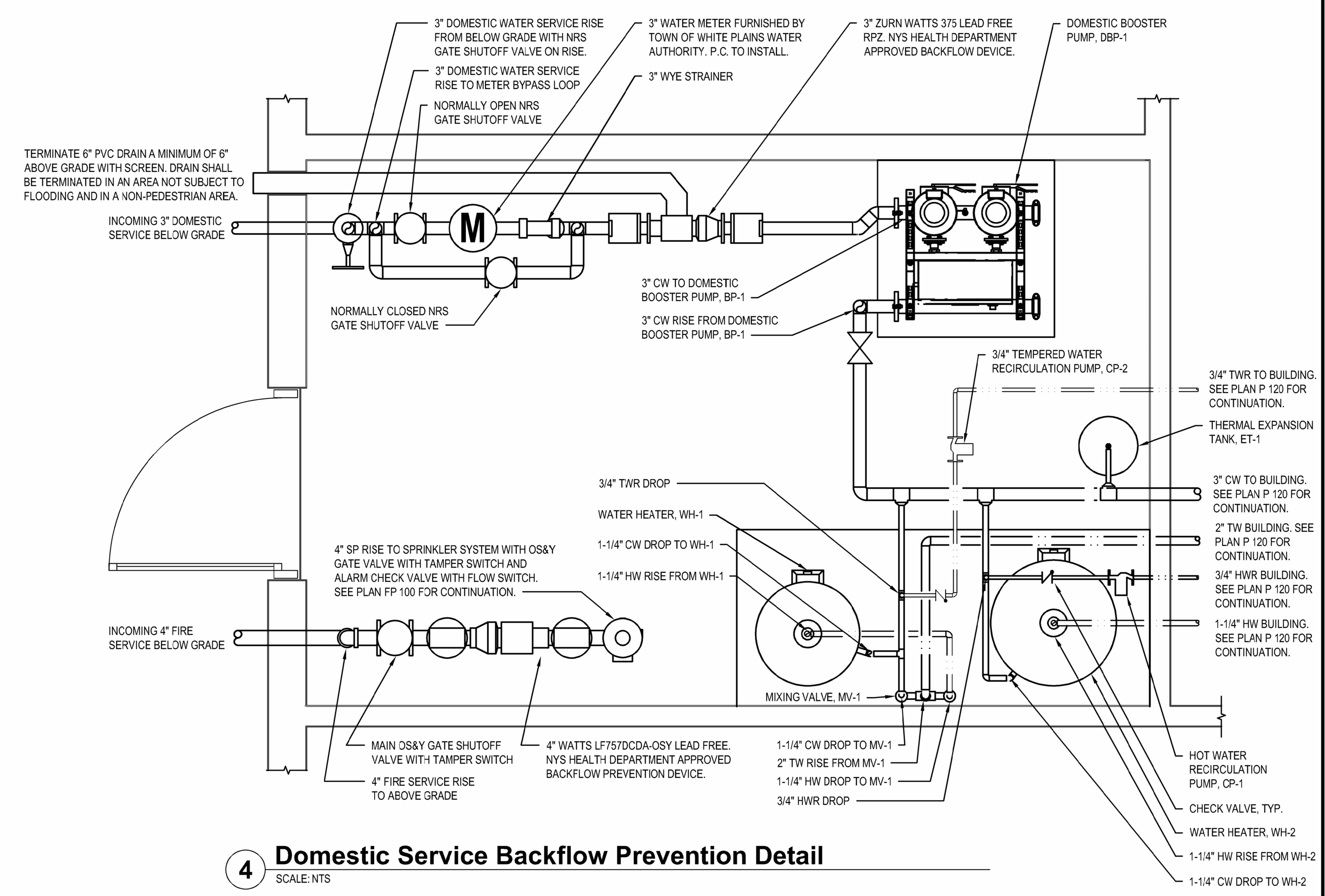

4 **Domestic Service Backflow Prevention Detail**
SCALE: NTS

DOMESTIC WATER AND FIRE SERVICE BACKFLOW PREVENTION DEVICE GENERAL NOTES:

1. INSTALLATION SHALL BE IN ACCORDANCE WITH ALL APPLICABLE COUNTY DEPARTMENT OF HEALTH SERVICES, NEW YORK STATE HEALTH DEPARTMENT REGULATIONS, AND WHITE PLAINS WATER DEPARTMENT REGULATIONS.
2. ALL CONNECTIONS ON THE WATER SERVICE SHALL BE DOWNSTREAM FROM THE BACKFLOW PREVENTION DEVICE. BYPASSING OF A BACKFLOW PREVENTION DEVICE IS A VIOLATION OF NEW YORK STATE HEALTH DEPARTMENT RULES AND REGULATIONS.
3. THE CONTRACTOR SHALL ENGAGE A CERTIFIED BACKFLOW PREVENTION DEVICE TESTER TO TEST THE BACKFLOW PREVENTION DEVICE AFTER INSTALLATION. IT IS THE OWNER'S RESPONSIBILITY TO HAVE EACH DEVICE CERTIFIED AT LEAST ANNUALLY WITH RESULTS REPORTED TO THE WHITE PLAINS WATER DEPARTMENT AND TO THE COUNTY DEPARTMENT OF HEALTH ON NY STATE FORM GEN 215. CONTRACTOR SHALL BE RESPONSIBLE FOR ALL RELATED TESTING AND APPLICATION FEES.
4. SHUT-OFF VALVES ON DOMESTIC WATER SERVICE BFP DEVICE SHALL BE NRS AND SHUT-OFF VALVES FOR THE IRRIGATION BFP TO BE BALL VALVES AND SHALL BE SAME MANUFACTURER AS BFP DEVICE.
5. SHUT-OFF VALVES ON FIRE SERVICE BFP DEVICE SHALL BE OS&Y TYPE AND SHALL BE SAME MANUFACTURER AS BFP DEVICE.
6. TEST COCKS ON THE BFP DEVICE SHALL BE POSITIONED TO FACILITATE TESTING WITH 30" MINIMUM CLEARANCE.
7. BACKFLOW DEVICES MAY NOT BE MODIFIED IN ANY WAY DURING INSTALLATION.
8. 2" DOMESTIC WATER SERVICE TO BE COPPER TYPE K. 4" DOMESTIC WATER SERVICE AND 6" FIRE SERVICE TO BE CLASS 52 DUCTILE IRON AND SHALL HAVE A MINIMUM OF 4'-6" OF COVER.
9. PIPING SHALL BE UN-BRANCHED AND UNRESTRICTED FROM THE SUPPLY MAIN TO THE DEVICE, EXCEPT FOR THE METER ON THE DOMESTIC SERVICE.
10. CONTRACTOR SHALL PROVIDE APPROPRIATE FLOOR/WALL SUPPORTS FOR ALL DEVICES AND PIPING. ALL SUPPORTS/HANGERS/CLAMPS SHALL BE GALVANIZED STEEL.
11. BACKFLOW DEVICES SHALL BE APPROVED BY THE UNIVERSITY OF SOUTHERN CALIFORNIA FOUNDATION FOR CROSS CONNECTION CONTROL AND HYDRAULIC RESEARCH.
12. THE ROOM AND ENCLOSURE WHERE THE DEVICES ARE LOCATED SHALL BE HEATED AND SHALL HAVE LIGHTING.
13. DEVICE MAY NOT BE INSTALLED HIGHER THAN 5'-0' ABOVE THE FLOOR OR A FIXED PLATFORM IS REQUIRED.
14. WATER SERVICE LINES TO MAINTAIN A MINIMUM CLEARANCE OF 10'-0" FROM GAS SERVICE, SEWER LINES, DRAINAGE LINES, UTILITY POLES AND TREES, ETC.
15. ALL 4" PIPING 90 DEGREE ELBOWS WILL NEED TO HAVE THRUST BLOCKS AND BE RODDED WITH 3/4" RODS.
16. ALL ASSEMBLIES MUST BE INSTALLED WITH THE MANUFACTURER SUPPLIED RESILIENT SEATED SHUT-OFF VALVES INTEGRAL TO THE ASSEMBLY.

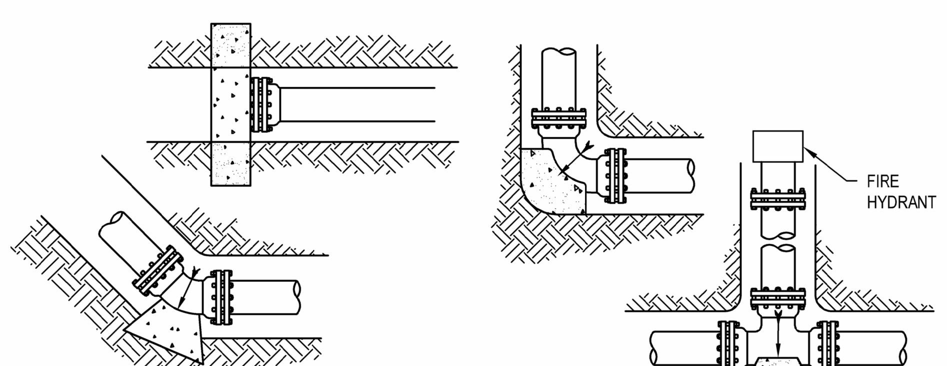

NOTES:

1. CONCRETE BLOCKING SHALL BE APPLIED ON ALL PIPE LINES 4-INCH IN DIAMETER AND LARGER AT ALL TEES, PLUGS, CAPS, AND AT BENDS DEFLECTING 22 1/2 DEGREES OR MORE. BLOCKING SHALL BE OF CONCRETE OF A MIX HAVING A COMPRESSIVE STRENGTH OF NOT LESS THAN 4,000 PSI, AND BLOCKING SHALL BE PLACED BETWEEN SOLID GROUND AND THE FITTING TO BE ANCHORED. THE BLOCKING SHALL BE SO PLACED THAT THE PIPE AND FITTING JOINTS WILL BE ACCESSIBLE FOR REPAIR.

2. THE SQUARE FOOT BEARING AREA OF THE BLOCKING ON SOLID GROUND SHALL BE INDICATED IN THE TABLE SHOWN TO THE RIGHT OR AS INDICATED BY THE ENGINEER.

3. FOR ALL VERTICAL BENDS, 3/4-INCH DIAMETER TIE RODS AND PIPE CLAMPS OR RETAINER GLANDS SHALL BE PROVIDED IN ADDITION TO THE CONCRETE BLOCKING SPECIFIED ABOVE FOR BENDS DEFLECTING 22-1/2 DEGREES OR MORE.

PIPE SIZE	DEAD END OR TEE	90° BEND	45° BEND	22 1/2° BEND
4"	1	1-1/2	3/4	1/2
6"	2	3	2	1
8"	4	5-1/2	3	1
10"	6	8-1/2	4-1/2	2-1/2
12"	9	12	6-1/2	3-1/2
16"	12	15-1/2	8-1/2	4-1/2

5 **Thrust Block Location Detail**
SCALE: NTS

H2M architects + engineers

2 Executive Blvd., Suite 401
Suffern, NY 10901
845.357.7238 • www.h2m.com
NY Architecture & Landscape Architecture: No Certificate Required
NY Engineering Certificate of Authorization No. 0018438

CONSULTANTS:

MARK	DATE	DESCRIPTION

STATE OF NEW YORK · JONATHAN RICHARD MURATORE · 096440-1 · LICENSED PROFESSIONAL ENGINEER

10/31/2024 EXP. DATE
JONATHAN R. MURATORE, P.E.
NY PROFESSIONAL ENGINEER Lic. No. 096440
"IN ACCORDANCE WITH ARTICLE 145, SECTION 7209 OF THE NYS EDUCATION LAW, ALTERATION OF THIS DOCUMENT EXCEPT BY LICENSE PROFESSIONAL IS ILLEGAL"

DESIGNED BY:	DRAWN BY:	CHECKED BY:	REVIEWED BY:
CJM	CJM		JRM

PROJECT No.:	DATE:	SCALE:
WPSD2203	MARCH 2025	AS SHOWN

CLIENT
WHITE PLAINS CITY SCHOOL DISTRICT

HIGH SCHOOL ADDITION

White Plains Public Schools · WP · REAL LIFE LEARNING

66-22-00-01-0-016-030

CONTRACT
CONTRACT P
PLUMBING CONTRACT

STATUS
FINAL BID DOCUMENT

SHEET TITLE
PLUMBING SITE PLAN

DRAWING No.
PS 100.01

X:\WPSD (White Plains Central School District) - 10991\WPSD 2203 - (HS Addition)\02-BIM-CADD\Con-docs\plumb\P02.00 - Site Plan.dwg Last Modified: Feb 20, 2025 - 11:02am Plotted on: Feb 20, 2025 - 11:02am By cmcdermott

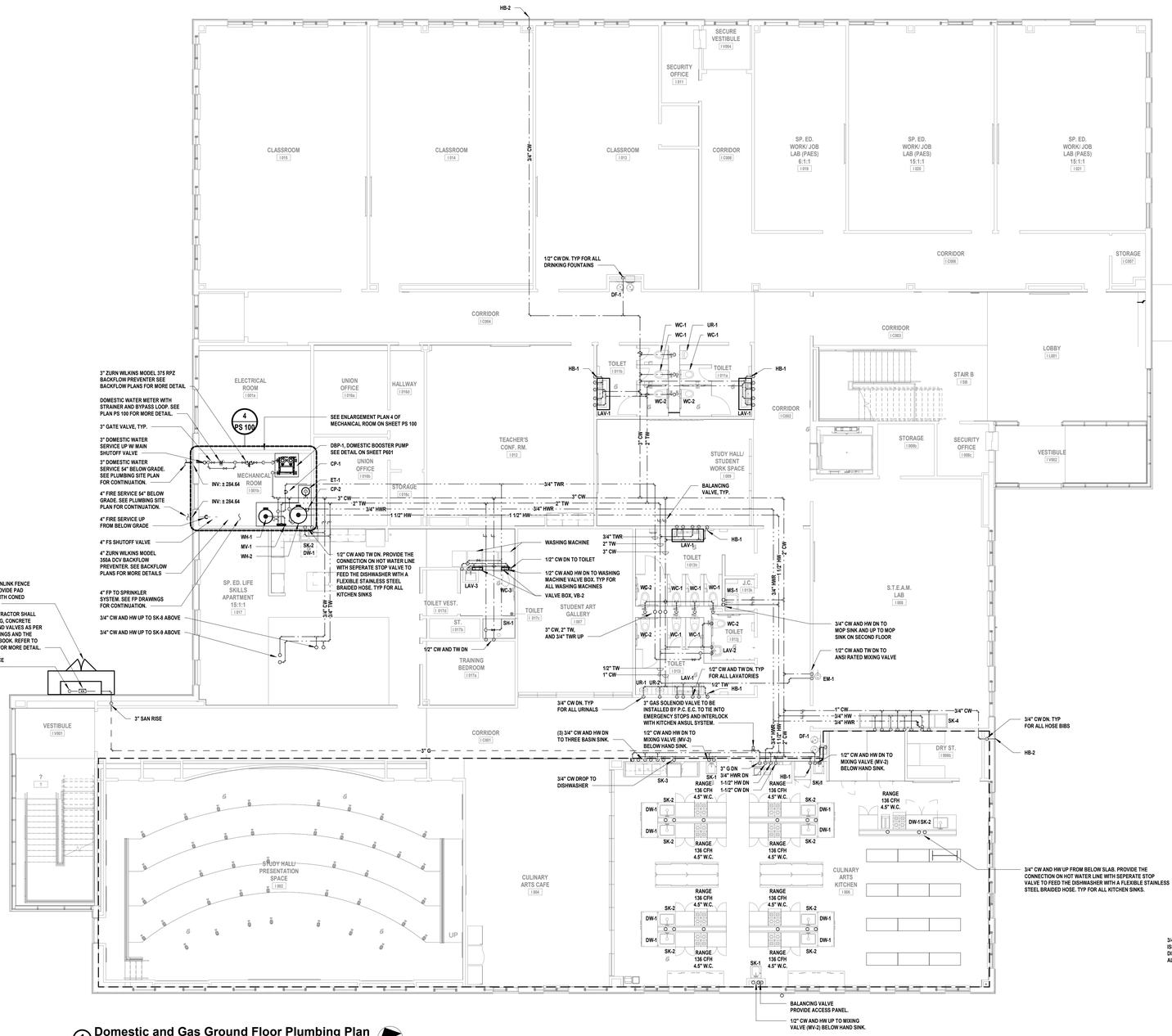

1 Domestic and Gas Ground Floor Plumbing Plan
SCALE: 1/8" = 1'-0"

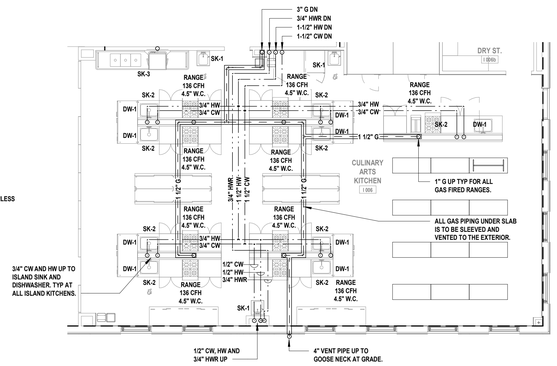

2 Domestic and Gas Culinary Kitchen Plumbing Underslab Plan
SCALE: 1/8" = 1'-0"

H2M architects + engineers
538 Broad Hollow Road, 4th Floor East
Melville, NY 11747
631.756.8000 • www.h2m.com
Land Surveying Certificate of Authorization No.: 0018178
Engineering Certificate of Authorization No.: 0018438

CONSULTANTS:

MARK	DATE	DESCRIPTION
3	01-10-2025	SED ENGINEERING ADDENDUM 3

STATE OF NEW YORK · JONATHAN RICHARD MURATORE · 086440-1 · LICENSED PROFESSIONAL ENGINEER

JONATHAN R. MURATOR, P.E.
19310987 Exp. Date
BY PROFESSIONAL ENGINEER LIC. No. 086440
"IN TRANSMITTING THIS DOCUMENT ENCLOSED BY ELECTRONIC PROFESSIONAL SEAL, I AM ACTING AS A LICENSED PROFESSIONAL ENGINEER IN THE STATE OF NEW YORK."

DESIGNED BY:	DRAWN BY:	CHECKED BY:	REVIEWED BY:
CJM	CJM	JRM	
PROJECT No: WPSD2203	DATE: MARCH 2025	SCALE: AS SHOWN	

CLIENT

WHITE PLAINS CITY SCHOOL DISTRICT

HIGH SCHOOL ADDITION

White Plains Public Schools · WP · REAL LIFE LEARNING

66-22-00-01-0-016-030

CONTRACT

CONTRACT P
PLUMBING CONSTRUCTION

STATUS

FINAL BID DOCUMENT

SHEET TITLE

PLUMBING
DOMESTIC WATER AND GAS GROUND AND BASEMENT FLOOR PLAN

DRAWING No.

P 120.01

C:\Users\cmcdermott\Documents\WPSD2203_Central21_M_cmcdermott4429bl.rvt

2/20/2025 10:45:39 AM

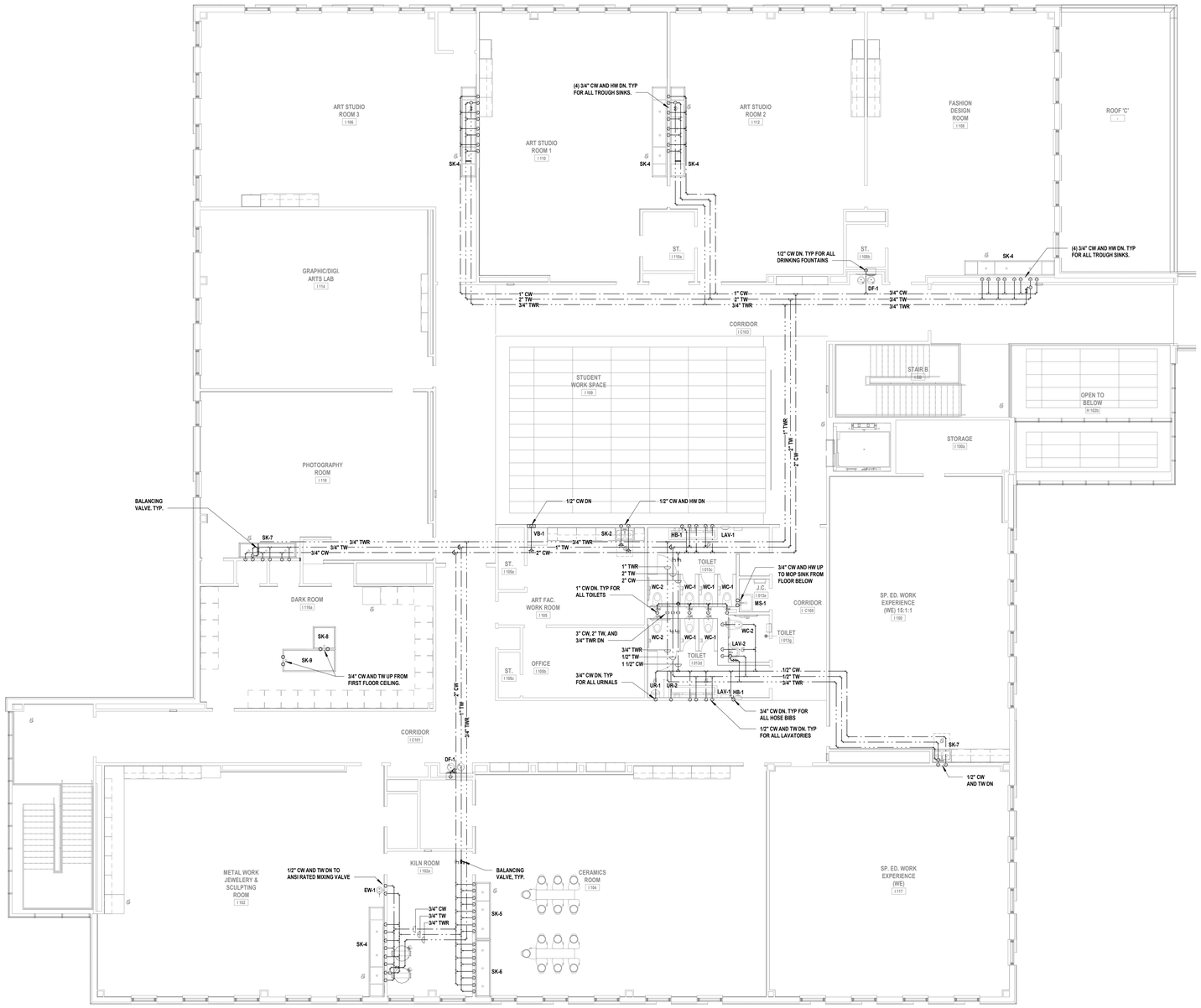

1 **Plumbing Domestic Water and Gas First Floor Plan**
SCALE: 1/8" = 1'-0"

H2M architects + engineers

538 Broad Hollow Road, 4th Floor East
Melville, NY 11747
631.756.8000 • www.h2m.com
Land Surveying Certificate of Authorization No.: 0018178
Engineering Certificate of Authorization No.: 0018438

CONSULTANTS:

MARK	DATE	DESCRIPTION
3	01-10-2025	SED ENGINEERING ADDENDUM 3

STATE OF NEW YORK · JONATHAN RICHARD MURATOR · 086440-1 · LICENSED PROFESSIONAL ENGINEER

JONATHAN R. MURATOR, P.E.
BY PROFESSIONAL ENGINEER LIC. No. 086440
19310987 Exp. Date
"ALTERATION OF THIS DOCUMENT VIOLATES AN ELEVENTH TERM PENAL N.Y. LAWS."

DESIGNED BY:	DRAWN BY:	CHECKED BY:	REVIEWED BY:
CJM	CJM	JRM	-
PROJECT No: WPSD2203	DATE: MARCH 2025	SCALE: AS SHOWN	

CLIENT
WHITE PLAINS CITY SCHOOL DISTRICT

HIGH SCHOOL ADDITION

White Plains Public Schools · WP · REAL LIFE LEARNING

66-22-00-01-0-016-030

CONTRACT
CONTRACT P
PLUMBING CONSTRUCTION

STATUS
FINAL BID DOCUMENT

SHEET TITLE
PLUMBING DOMESTIC WATER AND GAS FIRST FLOOR PLAN

DRAWING No.
P 121.01

C:\Users\cmodermott\Documents\WPSD2203_Central21_M_cmodermott4258.rvt
2/20/2025 10:45:40 AM

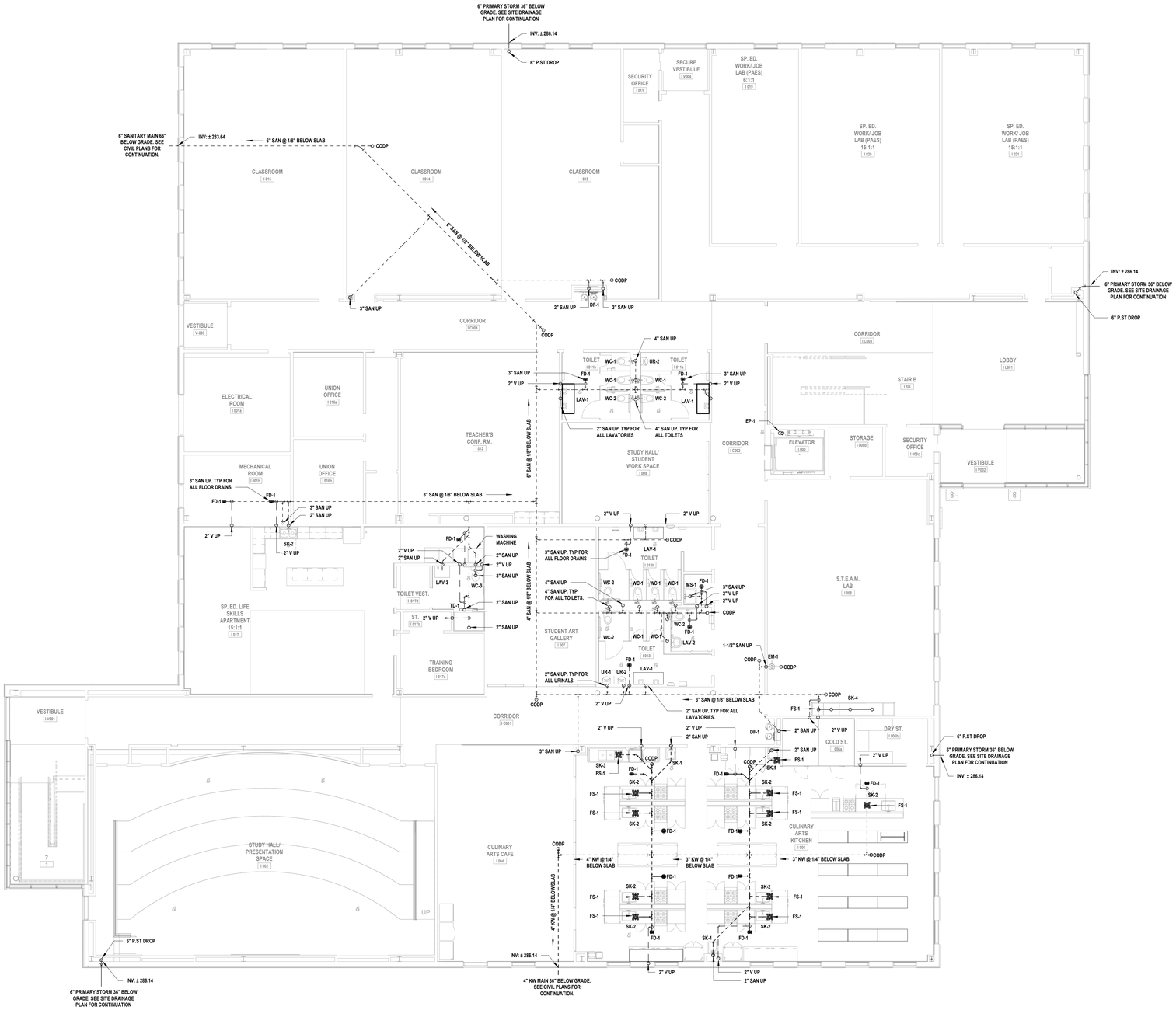

1 Sanitary, Vent and Storm Underslab Plan

SCALE: 1/8" = 1'-0"

C:\Users\cmoderno\AppData\Local\Temp\AcPublish_1244\WPSD2203_Central21_M_cmoderno@h2m.com.rvt

2/20/2025 10:45:41 AM

H 2 M architects + engineers

538 Broad Hollow Road, 4th Floor East
Melville, NY 11747
631.756.8000 • www.h2m.com
Land Surveying Certificate of Authorization No.: 0018178
Engineering Certificate of Authorization No.: 0018438

CONSULTANTS:

MARK	DATE	DESCRIPTION
3	01-10-2025	SED ENGINEERING ADDENDUM 3

STATE OF NEW YORK · JONATHAN RICHARD MURATORE · 086440-1 · LICENSED PROFESSIONAL ENGINEER

JONATHAN R. MURATOR, P.E.
BY PROFESSIONAL ENGINEER LIC. No. 086440

19310087 Exp. Date

THE CONTENTS OF THIS DOCUMENT ARE COPYRIGHTED BY H2M ARCHITECTS + ENGINEERS, P.C. & LLC.

DESIGNED BY:	DRAWN BY:	CHECKED BY:	REVIEWED BY:
CJM	CJM	JRM	-
PROJECT No: WPSD2203	DATE: MARCH 2025	SCALE: AS SHOWN	

CLIENT

WHITE PLAINS CITY SCHOOL DISTRICT

HIGH SCHOOL ADDITION

White Plains Public Schools · WP · REAL LIFE LEARNING

66-22-00-01-0-016-030

CONTRACT

CONTRACT P
PLUMBING CONSTRUCTION

STATUS

FINAL BID DOCUMENT

SHEET TITLE

PLUMBING
SANITARY, VENT & STORM
UNDERSLAB PLAN

DRAWING No.

P 130.01

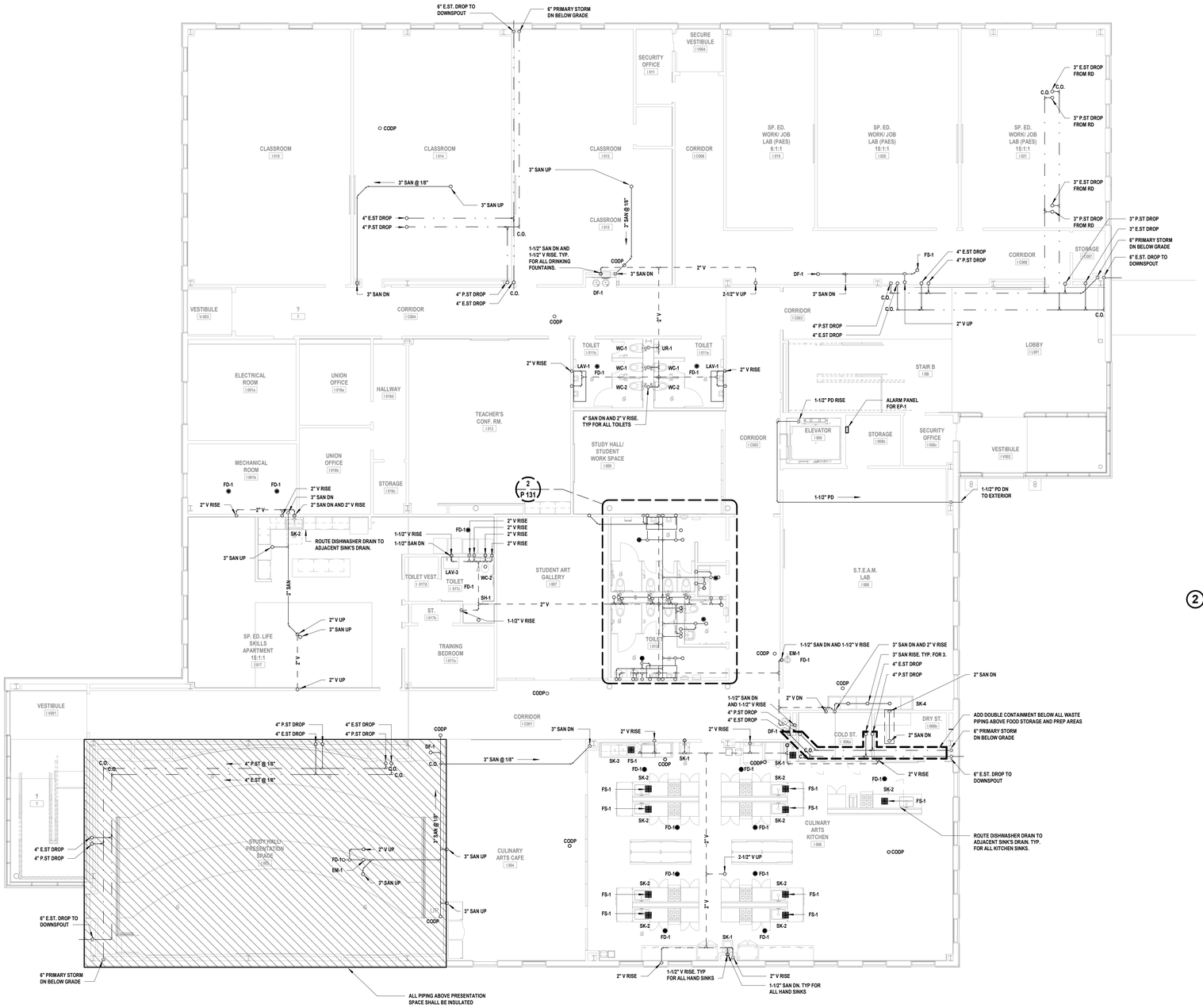

1 Sanitary, Vent and Storm Ground Floor Plan
SCALE: 1/8" = 1'-0"

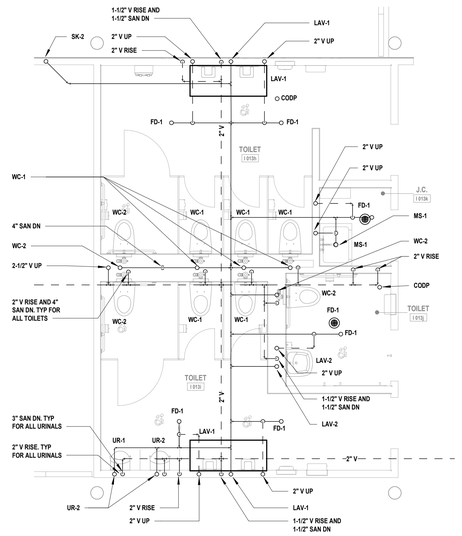

2 Ground Floor Gang Bathroom Sanitary and Vent Plan
SCALE: 1/4" = 1'-0"

H 2 M architects + engineers

538 Broad Hollow Road, 4th Floor East
Melville, NY 11747
631.756.8000 • www.h2m.com
Land Surveying Certificate of Authorization No.: 0018178
Engineering Certificate of Authorization No.: 0018438

CONSULTANTS:

MARK	DATE	DESCRIPTION
3	01-10-2025	SED ENGINEERING ADDENDUM 3

STATE OF NEW YORK · JONATHAN RICHARD MURATORE · 086440-1 · LICENSED PROFESSIONAL ENGINEER

JONATHAN R. MURATOR, P.E.
BY PROFESSIONAL ENGINEER LIC. No. 086440
19310207 Exp. Date
"IN TRANSITION BY THIS DOCUMENT ENTITY IS LICENSED TO PROFESSIONAL ENGINEER"

DESIGNED BY:	DRAWN BY:	CHECKED BY:	REVIEWED BY:
CJM	CJM	JRM	-
PROJECT No: WPSD2203	DATE: MARCH 2025	SCALE: AS SHOWN	

CLIENT
WHITE PLAINS CITY SCHOOL DISTRICT

HIGH SCHOOL ADDITION

66-22-00-01-0-016-030

CONTRACT
CONTRACT P
PLUMBING CONSTRUCTION

STATUS
FINAL BID DOCUMENT

SHEET TITLE
PLUMBING
SANITARY, VENT & STORM
GROUND FLOOR PLAN

DRAWING No.
P 131.01

C:\Users\cmodesmott\Documents\WPSD2203_Central21_M_cmodesmottM4.2R8.rvt

2/20/2025 10:45:45 AM

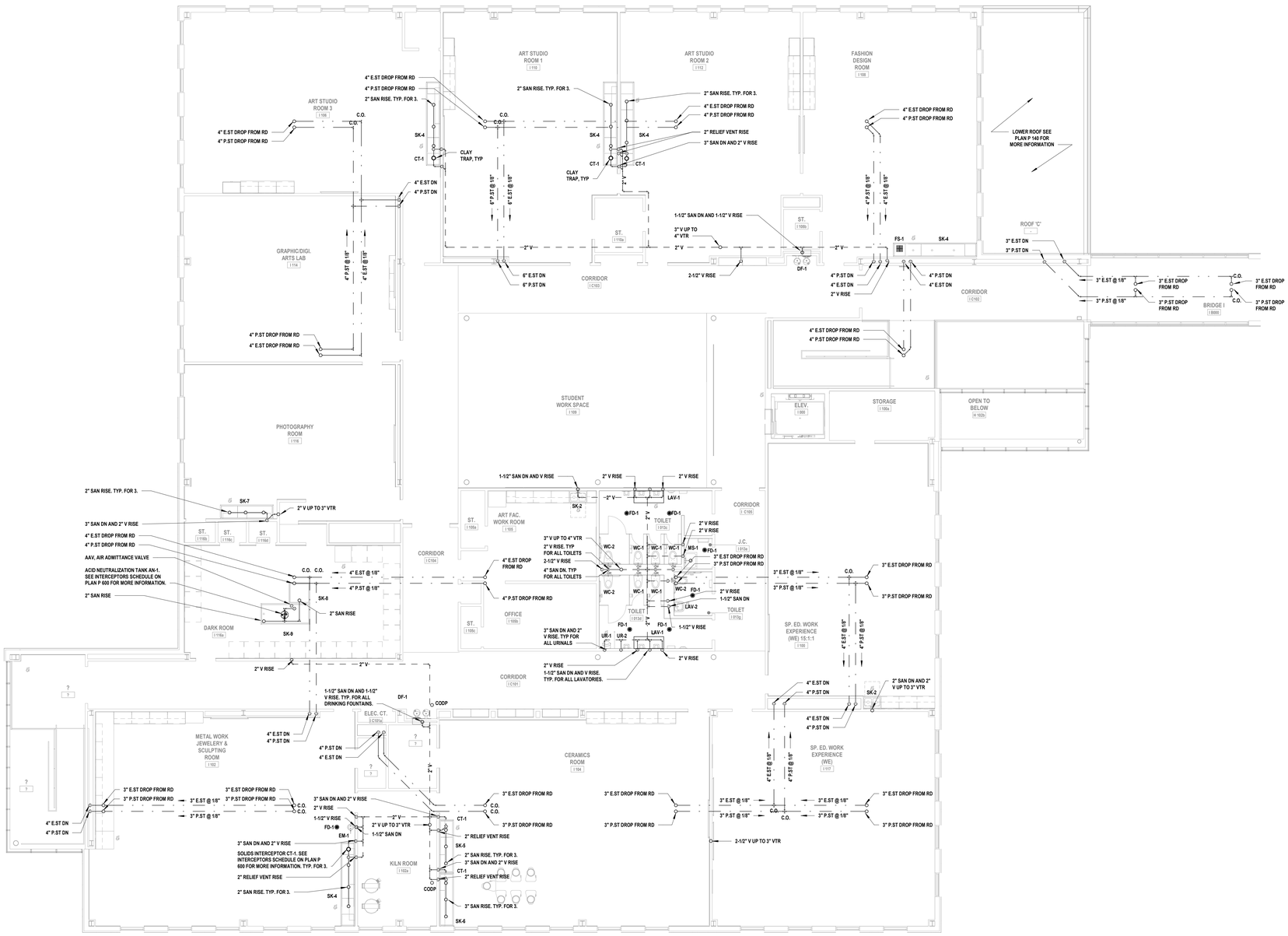

1 Sanitary, Vent and Storm First Floor Plan
SCALE: 1/8" = 1'-0"

H2M architects + engineers

538 Broad Hollow Road, 4th Floor East
Melville, NY 11747
631.756.8000 • www.h2m.com
Land Surveying Certificate of Authorization No.: 0018178
Engineering Certificate of Authorization No.: 0018438

CONSULTANTS:

MARK	DATE	DESCRIPTION
3	01-10-2025	SED ENGINEERING ADDENDUM 3

STATE OF NEW YORK
JONATHAN RICHARD MURATORE
096440-1
LICENSED PROFESSIONAL ENGINEER

10/31/2027
Exp. Date

JONATHAN R. MURATOR, P.E.
NY PROFESSIONAL ENGINEER Lic. No. 096440
"IN TRANSITION TO THE DOCUMENT ENTITY OF A LICENSED PROFESSIONAL ENGINEER"

DESIGNED BY:	DRAWN BY:	CHECKED BY:	REVIEWED BY:
CJM	CJM	JRM	
PROJECT No:	DATE:	SCALE:	
WPSD2203	MARCH 2025	AS SHOWN	

CLIENT

WHITE PLAINS CITY SCHOOL DISTRICT

HIGH SCHOOL ADDITION

White Plains Public Schools
WP
REAL LIFE LEARNING

66-22-00-01-0-016-030

CONTRACT

CONTRACT P
PLUMBING CONSTRUCTION

STATUS

FINAL BID DOCUMENT

SHEET TITLE

PLUMBING
SANITARY, VENT & STORM FIRST FLOOR PLAN

DRAWING No.

P 132.00

C:\Users\cmodermott\Documents\WPSD2203_Central21_M_cmodermott\M42R8.rvt

2/20/2025 10:45:47 AM

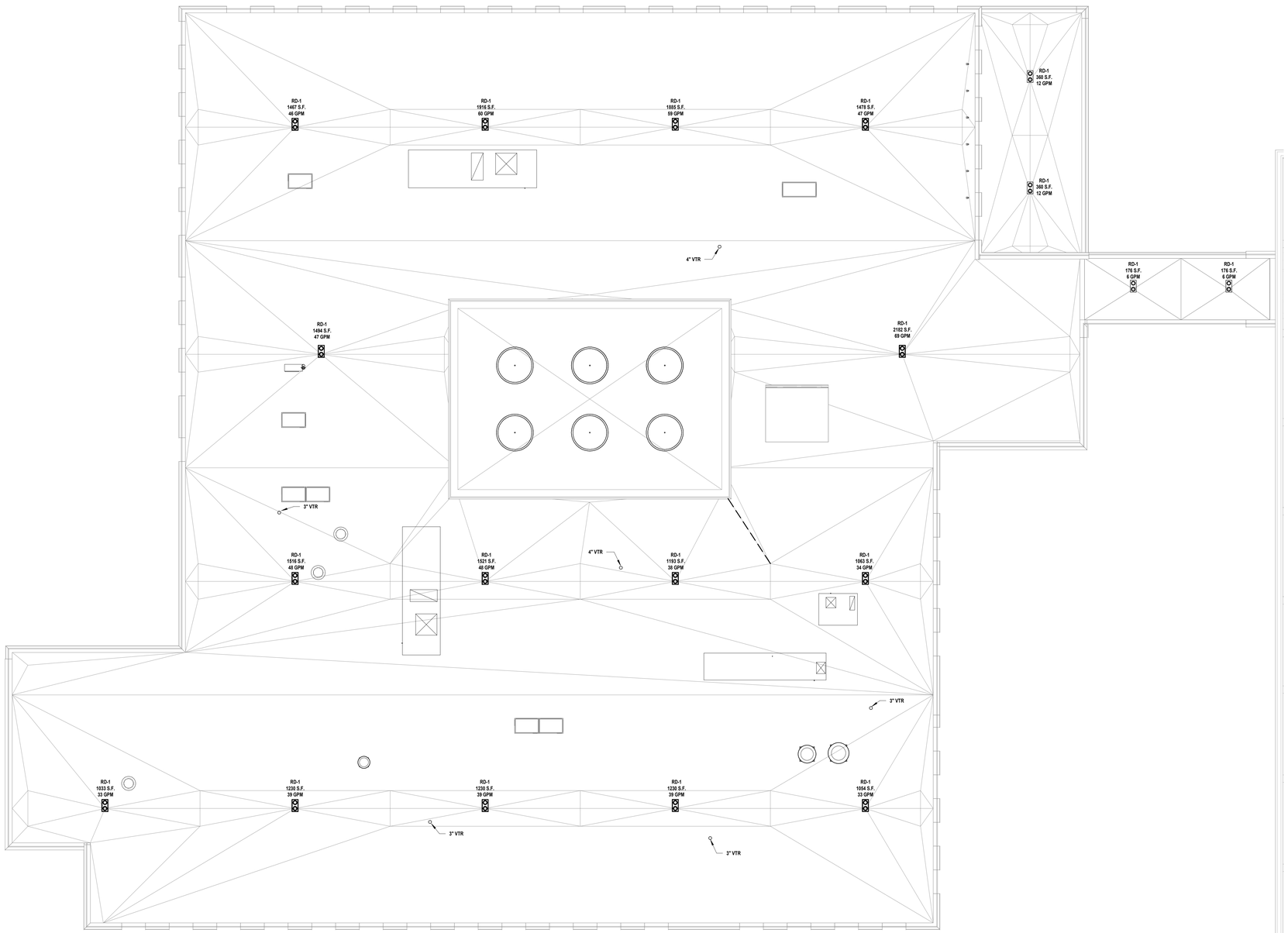

1 **Plumbing Roof Plan**
SCALE: 1/8" = 1'-0"

C:\Users\cmodermott\Documents\WPSD2203_Central21_M_cmodermott\M42R8.rvt

2/20/2025 10:45:49 AM

H2M architects + engineers

538 Broad Hollow Road, 4th Floor East
Melville, NY 11747
631.756.8000 • www.h2m.com
Land Surveying Certificate of Authorization No.: 0018178
Engineering Certificate of Authorization No.: 0018438

CONSULTANTS:

MARK	DATE	DESCRIPTION

STATE OF NEW YORK
JONATHAN RICHARD MURATORE
096440-1
LICENSED PROFESSIONAL ENGINEER

10/31/2027
Exp. Date

JONATHAN R. MURATOR, P.E.
NY PROFESSIONAL ENGINEER Lic. No. 096440
"IN TRANSITION OF THIS DOCUMENT EXCEPT BY A LICENSED PROFESSIONAL IS A LIBRARY"

DESIGNED BY:	DRAWN BY:	CHECKED BY:	REVIEWED BY:
CJM	CJM	JRM	
PROJECT No:	DATE:	SCALE:	
WPSD2203	MARCH 2025	AS SHOWN	

CLIENT

WHITE PLAINS CITY SCHOOL DISTRICT

HIGH SCHOOL ADDITION

White Plains Public Schools
WP
REAL LIFE LEARNING

66-22-00-01-0-016-030

CONTRACT

CONTRACT P
PLUMBING CONSTRUCTION

STATUS

FINAL BID DOCUMENT

SHEET TITLE

PLUMBING
ROOF PLAN

DRAWING No.

P 140.00

PLUMBING FIXTURE SCHEDULE

FIXTURE TAG	DESCRIPTION	BASIS OF DESIGN: MAKE	BASIS OF DESIGN: MODEL	TRIM / FAUCET: MAKE	TRIM / FAUCET: MODEL	TRIM / FAUCET: OPERATION	TRIM / FAUCET: MAX FLOW	COLD WATER: SIZE	COLD WATER: WFU	HOT WATER: SIZE	HOT WATER: WFU	DRAIN: SIZE	DRAIN: DFU	VENT	SPECIFICATION	REMARKS
LAV-1	LAVATORY - WALL MOUNT - WASH BASIN - SENSOR FAUCET	SLOAN	SLOANSTONE ELRF-82000	BRADLEY	WASHBAR DUO WBD1	SENSOR 120V OUTLET PLUG	0.5 GPM	1/2"	0.5	1/2"	0.5	1-1/2"	1	1-1/2"	SINK: SLOANSTONE SURFACE, 2-STATION WALL MOUNTED ROUND FRONT SINK, 60" W X 127" H, ADA COMPLIANT FAUCET: DECK MOUNTED, ADA COMPLIANT, INTEGRATED SIDE MIXER, VANDAL RESISTANT, CHROME, WITH 0.5 GPM AERATOR. COMPLIES WITH ASME A117.1 AND NSF 372. INCLUDE PK00.PAC PLUG-IN AC POWER KIT.	PROVIDE BRASS ANGLE STOP VALVES WITH FLEXIBLE STAINLESS STEEL SUPPLIES, AND 1-1/2" BRASS P-TRAP. PROVIDE CARRIER SUPPORT WATTS WCA-411 OR APPROVED EQUAL. HOT WATER SHALL NOT EXCEED 105°F. INSULATE ALL EXPOSED DRAIN AND SUPPLY PIPING WITH TRUBRO LAVGUARD.
LAV-2	LAVATORY - WALL MOUNT - ADA COMPLIANT - SENSOR FAUCET	AMERICAN STANDARD	MURRO UNIVERSAL DESIGN 0059.020EC	AMERICAN STANDARD	NEXTGEN SELECTRONIC 775B.305	SENSOR 120V OUTLET PLUG	0.5 GPM	1/2"	0.5	1/2"	0.5	1-1/2"	1	1-1/2"	SINK: VITREOUS CHINA, REAR OVERFLOW, RECESSED SELF-DRAINING DECK , ADA COMPLIANT FAUCET: DECK MOUNTED, ADA COMPLIANT, INTEGRATED SIDE MIXER, VANDAL RESISTANT, CHROME, WITH 0.5 GPM AERATOR. COMPLIES WITH ASME A117.1 AND NSF 372. INCLUDE PK00.PAC PLUG-IN AC POWER KIT.	PROVIDE BRASS ANGLE STOP VALVES WITH FLEXIBLE STAINLESS STEEL SUPPLIES, AND 1-1/2" BRASS P-TRAP. PROVIDE CARRIER SUPPORT WATTS WCA-411 OR APPROVED EQUAL. HOT WATER SHALL NOT EXCEED 105°F. INSULATE ALL EXPOSED DRAIN AND SUPPLY PIPING WITH TRUBRO LAVGUARD. PROVIDE AMERICAN STANDARD 0059.0202EC SHROUD
LAV-3	LAVATORY - WALL MOUNT - ADA COMPLIANT - SENSOR FAUCET	SLOAN	SLOANSTONE QSGR-81000	SLOAN	EBF-415	SENSOR 120V OUTLET PLUG	0.5 GPM	1/2"	0.5	1/2"	0.5	1-1/2"	1	1-1/2"	SINK: SLOANSTONE QUARTZ, WALL-MOUNTED GRADIENT SINK, RECESSED SELF-DRAINING DECK , ADA COMPLIANT. FAUCET: DECK MOUNTED, ADA COMPLIANT, INTEGRATED SIDE MIXER, VANDAL RESISTANT, CHROME, WITH 0.5 GPM AERATOR. COMPLIES WITH ASME A117.1 AND NSF 372. INCLUDE PK00.PAC PLUG-IN AC POWER KIT.	PROVIDE BRASS ANGLE STOP VALVES WITH FLEXIBLE STAINLESS STEEL SUPPLIES, AND 1-1/2" BRASS P-TRAP. PROVIDE CARRIER SUPPORT WATTS WCA-411 OR APPROVED EQUAL. HOT WATER SHALL NOT EXCEED 105°F. INSULATE ALL EXPOSED DRAIN AND SUPPLY PIPING WITH TRUBRO LAVGUARD. PROVIDE AMERICAN STANDARD 0059.0202EC SHROUD
WC-1	WATER CLOSET - WALL MOUNTED - BACK SPUD	SLOAN	ST-2469-STG	SLOAN	CX8158	SENSOR BATTERY	1.28 GPF	1"	10	- - -	- - -	3"	4	1-1/2"	TOILET: VITREOUS CHINA, ELONGATED, ADA HEIGHT, ASME A112.19.2. PROVIDE TOILET SEAT CHURCH 295CT OR APPROVED EQUAL. MINIMUM OF 25 PSI. FLUSH VALVE: CONCEALED SENSOR FLUSHOMETER VALVE, 1.28 GPF, ROUGH BRASS FINISH, FIXTURE CONNECTION REAR SPUD, SOLAR BATTERY CHARGER, TRUE MECHANICAL OVERRIDE, SMALL WALL BOX.	PROVIDE CARRIER SUPPORT WATTS ISCA SERIES OR APPROVED EQUAL. SEE PLANS FOR PIPE ROUTING AND FOR SPECIFIC CARRIER ORIENTATION. COORDINATE GRAB BAR HEIGHT WITH FLUSHVALVE.
WC-2	WATER CLOSET - WALL MOUNTED - ADA HEIGHT- BACK SPUD	SLOAN	ST-2469-STG	SLOAN	CX8158	SENSOR BATTERY	1.28 GPF	1"	10	- - -	- - -	3"	4	1-1/2"	TOILET: VITREOUS CHINA, ELONGATED, ADA HEIGHT, ASME A112.19.2. PROVIDE TOILET SEAT CHURCH 295CT OR APPROVED EQUAL. MINIMUM OF 25 PSI. FLUSH VALVE: CONCEALED SENSOR FLUSHOMETER VALVE, 1.28 GPF, ROUGH BRASS FINISH, FIXTURE CONNECTION REAR SPUD, SOLAR BATTERY CHARGER, TRUE MECHANICAL OVERRIDE, SMALL WALL BOX.	PROVIDE CARRIER SUPPORT WATTS ISCA SERIES OR APPROVED EQUAL. SEE PLANS FOR PIPE ROUTING AND FOR SPECIFIC CARRIER ORIENTATION. COORDINATE GRAB BAR HEIGHT WITH FLUSHVALVE.
WC-3	WATER CLOSET - TANK TYPE - FLOOR MOUNTED - FLOOR OUTLET	SLOAN	WETS-8029.8010	- - -	- - -	- - -	1.28 GPF	1/2"	0.5	- - -	- - -	3"	4	1-1/2"	VITREOUS CHINA, 12-INCH ROUGH-IN, ADA COMPLIANT, ELONGATED BOWL, TOILET SEAT, WATER SENSE, AND COMPLIES WITH ASME A112.19.2. TRIP LEVER TO BE ON APPROACH SIDE OF TOILET.	PROVIDE BRASS ANGLE STOP WITH FLEXIBLE STAINLESS STEEL SUPPLIES, CLOSET BOLT AND WAX RING.
UR-1	URINAL - ADA COMPLIANT - BACK SPUD	AMERICAN STANDARD	GREENBROOK 6517001EC	AMERICAN STANDARD	SELECTRONIC #606B305.007	SENSOR AC POWER	0.125 GPF	3/4"	5	- - -	- - -	3"	4	2"	URINAL: VITREOUS CHINA, WALL MOUNTED, ASME A112.19.2. CONCEALED SENSOR FLUSHOMETER VALVE, 0.5 GPF, ROUGH BRASS FINISH, FIXTURE CONNECTION REAR SPUD, OVERRIDE, SMALL WALL BOX.	PROVIDE CARRIER SUPPORT WATTS CA-311 OR APPROVED EQUAL.
DF-1	DRINKING FOUNTAIN - RECESSED - BILEVEL - ADA COMPLIANT - REFRIGERATED	ELKAY	LZWS-LRPBM28K	- - -	- - -	MANUAL/SENSOR	8 GPH	1/2"	0.25	-	-	1-1/4"	0.5	1-1/2"	BI-LEVEL STAINLESS STEEL WATER COOLER WITH MOUNTING FRAME. COMPLIES WITH ASME A112.19.3 AND NSF 61.	PROVIDE SERVICE STOP WITH ACCESS, VANDAL RESISTANT BUBBLER (ELKAY 97446C) AND ADDITIONAL FILTER (ELKAY 51299C)
MS-1	MOP SINK - FLOOR MOUNTED	FIAT	MSB 2424	FIAT	830-AA	MANUAL		3/4"	2.25	3/4"	2.25	3"	2	1-1/2"	MOLDED-STONE ONE-PIECE MOP SINK, STAINLESS STEEL 3" DRAIN BODY WITH STRAINER. BRASS CHROME PLATED SERVICE FAUCET WITH VACUUM BREAKER, INTEGRAL STOPS, ADJUSTABLE WALL BRACE, PAIL HOOK AND 3/4" HOSE THREAD ON SPOUT. COMPLIES WITH ASME A112.18.2.	PROVIDE STAINLESS STEEL WALL GUARDS (FIAT MSG2424), HOSE AND HOSE BRACKET (FIAT 832AA), MOP HANGER (FIAT 889CC), BUMPER GUARD (FIAT E88-AA), AND 3" P-TRAP.
EM-1	EMERGENCY EYEWASH STATION	HAWS	7360BT	- - -	- - -	MANUAL	- - -	1/2"	- - -	1/2"	- - -	1-1/2"	2	1-1/2"	WALL MOUNTED EYE/FACEWASH SHALL INCLUDE A STAINLESS STEEL 11" ROUND BOWL, AN AXION MSR EYE/FACEWASH HEAD SUPPLIED BY AN INTEGRAL FLOW CONTROL, CHROME-PLATED BRASS STAY-OPEN BALL VALVE WITH A STAINLESS STEEL BALL AND STEM, AND IN-LINE 50 X 50 MESH WATER STRAINER. UNIT SHALL ALSO INCLUDE CAST-ALUMINUM CHROMATE PROTECTED WALL BRACKET, YELLOW PLASTIC POP-OFF DUST COVER FOR EYEWASH HEAD, TAILPIECE, UNIVERSAL SIGN, 1/2" IPS INLET, AND 1-1/2" IPS WASTE	PROVIDE THERMOSTATIC MIXING VALVE HAWS MODEL 9201EFE. OUTLET TEMPERATURE SHALL BE SET TO 65 DEG. F.
SK-1	SINK - STAINLESS - WALL MOUNT- 16" x 14" - HAND WASH - ADA COMPLIANT	ADVANCE TABCO	7-PS-46	ADVANCE TABCO	INCLUDED	MANUAL	1.5 GPM	1/2"	1	1/2"	1	1-1/2"	2	1-1/2"	SINK: WALL MOUNT, 18-GAUGE STAINLESS STEEL SINK, ADA-COMPLIANT, GRID STRAINER, DECK MOUNTED SOAP DISPENSER, UNDERMOUNTED FRONT-LOADING PAPER TOWEL DISPENSER. COMPLIES WITH ASME A112.19.3. FAUCET: SPLASH MOUNTED FAUCET WITH WRIST HANDLES, "D" SPOUT. COMPLIES WITH NSF 61 & 372, AND ASME A112.18.1.	PROVIDE BRASS ANGLE STOP VALVES WITH FLEXIBLE STAINLESS STEEL SUPPLIES, AND 1-1/2" BRASS P-TRAP.
SK-2	SINK - STAINLESS - 2- COMPARTMENT DROP IN - 14" x 16" (PER COMPARTMENT)	ADVANCE TABCO	DI-2-1410	ADVANCE TABCO	K-58	MANUAL	2.2 GPM	1/2"	1	1/2"	1	1-1/2"	2	1-1/2"	SINK: 2-COMPARTMENT DROP IN, 18-GAUGE STAINLESS STEEL SINK , AND GRID STRAINER. COMPLIES WITH ASME A112.19.3. FAUCET: DECK MOUNTED SWING W/ SPRAY, 8" O.C. COMPLIES WITH NSF 61 & 372, AND ASME A112.18.1.	PROVIDE BRASS ANGLE STOP VALVES WITH FLEXIBLE STAINLESS STEEL SUPPLIES, AND 1-1/2" BRASS P-TRAP.
SK-3	SINK - STAINLESS - 3- COMPARTMENT STAND ALONE - 20" x 16" (PER COMPARTMENT)	ADVANCE TABCO	T9-3-54-18R	ADVANCE TABCO	K-119	MANUAL	2.2 GPM	3/4"	1	1/2"	1	1-1/2"	2	1-1/2"	SINK: 3-COMPARTMENT ON LEGS, 18-GAUGE STAINLESS STEEL SINK , AND GRID STRAINER. COMPLIES WITH ASME A112.19.3. FAUCET: DECK MOUNTED SWING W/ SPRAY, 8" O.C. COMPLIES WITH NSF 61 & 372, AND ASME A112.18.1.	PROVIDE BRASS ANGLE STOP VALVES WITH FLEXIBLE STAINLESS STEEL SUPPLIES, AND 1-1/2" BRASS P-TRAP.
SK-4	METAL WORK JEWELERY & SCULPTING ROOM TROUGH SINK - ADA	ELKAY	LK50-13038B	ELKAY	LK940TS08T4S	MANUAL	1.5 GPM	3/4"	1	1/2"	1	1-1/2"	2	1-1/2"	SINK: 3-DRAIN TROUGH SINK ON LEGS WITH BASIN DIMENSIONS 104" L X 26.5" W X 14" D. 14 GAUGE 304 STAINLESS STEEL. GRID STRAINERS. SINK TO BE PROVIDED WITH TWO (2) 24" L X 26.5" W DRAIN BOARDS. RIGHT DRAIN COMPARTMENT SHALL BE ADA COMPLIANT, WITH 27" OF CLEARANCE BELOW THE BOTTOM OF THE BASIN. SINK TO COMPLY WITH ASME A112.19.3. FAUCET: FOUR 8" O.C. BACK MOUNTED FAUCETS WITH 8" SWING SPOUTS AND 4" WRISTBLADE HANDLES.	PROVIDE BRASS ANGLE STOP VALVES WITH FLEXIBLE STAINLESS STEEL SUPPLIES. PROVIDE SOLIDS INTERCEPTOR CT-1 BELOW SINK. SEE INTERCEPTORS SCHEDULE FOR MORE INFORMATION.
SK-5	CERAMICS ROOM TROUGH SINK - ADA	ELKAY	LK50-13037B	ELKAY	LK940TS08T4S	MANUAL	1.5 GPM	3/4"	1	1/2"	1	1-1/2"	2	1-1/2"	SINK: 3-DRAIN TROUGH SINK ON LEGS WITH BASIN DIMENSIONS 104" L X 26.5" W X 14" D. 14 GAUGE 304 STAINLESS STEEL. GRID STRAINERS. RIGHT DRAIN COMPARTMENT SHALL BE ADA COMPLIANT, WITH 27" OF CLEARANCE BELOW THE BOTTOM OF THE BASIN. SINK TO COMPLY WITH ASME A112.19.3. FAUCET: FOUR 8" O.C. BACK MOUNTED FAUCETS WITH 8" SWING SPOUTS AND 4" WRISTBLADE HANDLES.	PROVIDE BRASS ANGLE STOP VALVES WITH FLEXIBLE STAINLESS STEEL SUPPLIES. PROVIDE SOLIDS INTERCEPTOR CT-1 BELOW SINK. SEE INTERCEPTORS SCHEDULE FOR MORE INFORMATION.
SK-6	CERAMICS ROOM TROUGH SINK	ELKAY	LK50-13037	ELKAY	LK940TS08T4S	MANUAL	1.5 GPM	3/4"	1	1/2"	1	1-1/2"	2	1-1/2"	SINK: 3-DRAIN TROUGH SINK ON LEGS WITH BASIN DIMENSIONS 104" W X 26.5" L X 14" D. 14 GAUGE 304 STAINLESS STEEL. GRID STRAINERS. SINK TO COMPLY WITH ASME A112.19.3. FAUCET: FOUR 8" O.C. BACK MOUNTED FAUCETS WITH 8" SWING SPOUTS AND 4" WRISTBLADE HANDLES.	PROVIDE BRASS ANGLE STOP VALVES WITH FLEXIBLE STAINLESS STEEL SUPPLIES. PROVIDE SOLIDS INTERCEPTOR CT-1 BELOW SINK. SEE INTERCEPTORS SCHEDULE FOR MORE INFORMATION.
SK-7	PHOTOGRAPHY ROOM SINK	-	-	-	-	-	-	3/4"	1	3/4"	1	-	-	-	PROVIDED BY OWNER	PROVIDE BRASS ANGLE STOP VALVES WITH FLEXIBLE STAINLESS STEEL SUPPLIES, AND 1-1/2" BRASS.
SK-8	DARK ROOM SINK	-	-	-	-	-	-	3/4"	1	3/4"	1	-	-	-	PROVIDED BY OWNER	PROVIDE BRASS ANGLE STOP VALVES WITH FLEXIBLE STAINLESS STEEL SUPPLIES. PROVIDE POINT OF USE ACID NEUTRALIZATION TANK AN-1 BELOW SINK. SEE INTERCEPTORS SCHEDULE FOR MORE INFORMATION.
SK-9	DARK ROOM SINK	-	-	-	-	-	-	3/4"	1	3/4"	1	-	-	-	PROVIDED BY OWNER	PROVIDE BRASS ANGLE STOP VALVES WITH FLEXIBLE STAINLESS STEEL SUPPLIES. PROVIDE POINT OF USE ACID NEUTRALIZATION TANK AN-1 BELOW SINK. SEE INTERCEPTORS SCHEDULE FOR MORE INFORMATION.
SH-1	SHOWER ENCLOSURE - 63" x 42" - ADA COMPLIANT - TRENCH DRAIN - SHOWER FAUCET	EVERFAB	S6339RWTA-L/R	DELTA	SEE REMARKS	MANUAL	1.5 GPM	1/2"	0.5	1/2"	0.5	1-1/2"	2	1-1/2"	PAN: TWO PIECE ALTERNATE ROLL-IN TYPE SHOWER STALL, FIBERGLASS COMPOSITE, SEAMLESS WITH FOLD UP SEAT, GRAB BARS, SOAP DISH, BRASS REAR DRAIN, SHOWER CURTAIN AND ROD, ANSI Z124.2, ALCOVE TYPE, WITH NON SLIP BOTTOM. SHOWER: TRIM PACKAGE: DELTA T13H332, 1.5 GPM, WATERSENSE SHOWER HEAD & HANDSHOWER, 24-INCH WALL BAR, METAL HOSE, FAUCET TRIM WITH LEVER HANDLE - ROUGH VALVE BODY: DELTA MULTICHOICE R10700-UNWS, UNIVERSAL ROUGH VALVE BODY WITH DIVERTER VALVE ROUGH IN. ALL FAUCET PARTS TO COMPLY WITH ADA REGULATIONS, ASME A112.18.1, AND APPROVED EQUAL.	FAUCET CONTROLS SHALL BE MOUNTED ON THE SHOWER WALL ADJACENT TO THE FOLD UP SEAT. PIPING FROM THE MIXING VALVE TO THE DIVERTER VALVE AND THE SHOWER HEADS SHALL BE COPPER.
HB-1	HOSE BIBB - INTERIOR WITH KEY	WOODFORD	24P-3/4	-	-	MANUAL	-	3/4"	-	-	-	-	-	-	WALL FAUCET WITH ASSE STANDARD 1011 APPROVED ANTI-SIPHON VACUUM BREAKER, 3/4" MALE HOSE THREAD OUTLET SPOUT, LOOSE TEE KEY HANDLE.	
HB-2	WALL HYDRANT - FROST FREE	WOODFORD	MB65	-	-	MANUAL	-	3/4	-	-	-	-	-	-	FREEZELESS WALL HYDRANT WITH ASSE STANDARD 1011 APPROVED VACUUM BREAKER, 3/4" MALE HOSE THREAD OUTLET SPOUT, ALL BRASS, TEE KEY OPERATED.	
FD-1	FLOOR DRAIN	ZURN	ZB415-BZ1-VP	-	-	-	-	-	-	-	-	-	2	2	FLOOR DRAIN: DURA-COATED CAST IRON BODY. POLISHED BRONZE TOP AND VANDAL PROOF SECURED TOP.	PROVIDE TRAP SEALS: ZURN Z1072. SEE PLANS FOR SIZES.
RD-1	ROOF DRAIN - COMBINATION	ZURN	Z164-G-VP	-	-	-	-	-	-	-	-	-	-	-	12" DIAMETER COMBINATION ROOF DRAIN WITH 4-INCH DAM. DURA-COATED CAST IRON BODY AND DOME.	
VB-1	REFRIGERATOR WATER SUPPLY VALVE BOX	SIOUX CHIEF	696-G2313MF	-	-	MANUAL	-	1/2"	0.25	-	-	-	-	-	ICE MAKER SUPPLY BOX WITH WATER HAMMER ARRESTOR. HIGH IMPACT PLASTIC BOX. 1/2" CW SUPPLY CONNECTION WITH 1/4" TURN BALL VALVE. PROVIDE AS FIRE RATED IN FIRE RATED AND BEARING WALLS.	
VB-2	WASHING MACHINE VALVE BOX	SIOUX CHIEF	696-G101MF	-	-	MANUAL	-	1/2"	1	1/2"	1	2"	2	2"	LAUNDRY SUPPLY BOX WITH WATER HAMMER ARRESTORS, HIGH IMPACT PLASTIC BOX, SEPARATE SUPPLY AND DRAINAGE. 1/2" CW AND HW SUPPLY CONNECTIONS WITH 1/4" TURN BALL VALVES. 2" DRAIN OUTLET CONNECTION. DRAIN FASTENS TO BOX WITH LOCK NUT AND SLIP NUT. PROVIDE AS FIRE RATED IN FIRE RATED AND BEARING WALLS.	PROVIDE 2" DEEP PVC P-TRAP
TD-1	TRENCH DRAIN	LUXE	36SP	-	-	-	-	-	-	-	-	2"	2	2"	TRENCH DRAIN: 304 MARINE GRADE 18 GAUGE STAINLESS STEEL. PATTERN GRATE ECONOMICAL AND UNIVERSAL SQUARE HOLE PATTERN. DRAIN KIT INCLUDES GRATE, CHANNEL BODY, LIFTING KEY AND 2" MALE ADAPTER. ADA AND UPC APPROVED.	

WATER HEATER (ASME)

EQUIPMENT NO.	LOCATION	TYPE	STORAGE	MAKE	MODEL	DIMENSIONS (Ø"xH) OR (LxWxH)	ELECTRIC WATER HEATER: POWER / AMPS	ELECTRIC WATER HEATER: VOLTS / PHASE	RECOVERY AT 100°F RISE	WATER CONNECTION	EFFICIENCY	EXPANSION TANK: MAKE	EXPANSION TANK: MODEL	REMARKS
WH-1	MECH. ROOM I001b	ELECTRIC	120 GAL	A.O. SMITH	DVE-120-45A	35" X 62.25"	45 KW / 55 A	480 / 3-PHASE	184 GPH	1-1/4"	-	AMTROL	ST-30VC	NON-SIMULTANEOUS OPERATION
WH-2	MECH. ROOM I001b	ELECTRIC	150 GAL	A.O. SMITH	DVE-150A	38.75" X 65.5"	54 KW / 65 A	480 / 3-PHASE	221 GPH	1-1/2"	-			

(EQUIPMENT SPECIFICATIONS)

1. FLOOR MOUNTED WATER HEATERS SHALL HAVE A 2-INCH HIGH GALVANIZED SAFETY PAN WITH A 3/4" DRAIN LINE FROM THE SAFETY PAN TO THE NEAREST FLOOR DRAIN OR SERVICE SINK. PIPE THE T&P VALVE TO THE SAFETY PAN.
2. FLOOR MOUNTED WATER HEATERS, STORAGE TANKS, AND EXPANSION TANKS SHALL BE MOUNTED ON A 4-INCH CONCRETE PAD AND PAD SHALL EXTEND A MINIMUM OF 6-INCHES PAST EQUIPMENT.
3. EXPANSION TANKS SHALL BE INDEPENDENTLY SUPPORTED FROM THE PIPING SYSTEM, AND SHALL BE PRESSURIZED TO MEET THE INCOMING PRESSURE OF THE WATER SYSTEM. REFER TO MANUFACTURER INSTRUCTIONS FOR PROPER ORIENTATION.
4. STORAGE TANKS SHALL BE SET AT 140°F STORAGE TEMPERATURE.

PUMP SCHEDULE

PUMP NO.	LOCATION	TYPE	SERVICE	GPM (EA)	TDH (FT)	MOTOR DATA: RPM	MOTOR DATA: HP (EA)	MOTOR DATA: PHASE	MOTOR DATA: CYCLE	MOTOR DATA: VOLTS	REMARKS
CP-1	MECH. ROOM I001b	SIMPLEX	TEMP WATER RECIRC	2	4	3250	0.040	1	60	115 V	TACO MODEL 007-SF5 WITH TACO 00 TIMER MODEL 265-3 AND AQUASTAT 563-2
CP-2	MECH. ROOM I001b	SIMPLEX	HOT WATER RECIRC	1	2	3250	0.040	1	60	115 V	TACO MODEL 007-SF5 WITH TACO 00 TIMER MODEL 265-3 AND AQUASTAT 563-2
EP-1	ELEVATOR	SIMPLEX SUBMERSIBLE	ELEVATOR PIT	50	35	3450	0.5	1	60	115 V	PACKAGED UNIT ZOELLER 940-0014, OIL SMART WITH ALARM PANEL
DBP-1	MECH. ROOM I001B	DUPLEX	DOMESTIC WATER	70	68	3450	3	3	60	460 V	PROVIDE NSF APPROVED QUANTUM FLO PRODIGY 2 DUPLEX PUMP. PROVIDE HARDWARE INCLUDED IN PACKAGED BOOSTER PUMP. MOUNT BOOSTER PUMP ON 4" CONCRETE PAD. INSTALL PRESSURE TRANSDUCER ON PUMP DISCHARGE OUTLET. PROVIDE VIBRATION ISOLATION KIT (QTY. 4) MODEL 30.51423. SEE DETAIL FOR MORE INFORMATION.

INTERCEPTORS

EQUIPMENT NO.	LOCATION	FLUID	FLOW (GPM)	CAPACITY (LBS)	INLET AND OUTLET SIZE	MANUFACTUER	MODEL	NOMINAL DIMENSIONS	REMARKS
		BASIS OF DESIGN INFORMATION							
CT-1	ART ROOMS	CLAY	35 GPM	-	2"	STRIEM	AA-2	24.5" DIA. X 23" H	UNIT TO BE FLOOR MOUNTED BELOW FIXTURE
AN-1	DARK ROOM	ACID WASTE	-	-	2"	STRIEM	LB-5	14" L X 14" W X 13" H	UNIT TO BE FLOOR MOUNTED BELOW FIXTURE

MIXING VALVE STATION

EQUIPMENT NO.	LOCATION	MAXIMUM PRESSURE RANGE	MINIMUM FLOW	MAXIMUM FLOW	MANUFACTUER	MODEL	NOMINAL DIMENSIONS (W X H)
		BASIS OF DESIGN INFORMATION					
MV-1	MECH. ROOM I001b	125 PSI	0.5 GPM	125 GPM	POWERS	LFIS200VL	8" X 8"
MV-2	CULINARY ARTS KITCHEN	125 PSI	0.5	12 GPM	WATTS	LFLM495-1	5" X 6"

H2M architects + engineers

538 Broad Hollow Road, 4th Floor East
Melville, NY 11747
631.756.8000 ▪ www.h2m.com

Land Surveying Certificate of Authorization No.: 0018178
Engineering Certificate of Authorization No.: 0018438

CONSULTANTS:

MARK	DATE	DESCRIPTION
3	01-10-2025	SED ENGINEERING ADDENDUM 3

STATE OF NEW YORK · JONATHAN RICHARD MURATORE · 096440-1 · LICENSED PROFESSIONAL ENGINEER

10/31/2027 Exp. Date

JONATHAN R. MURATOR, P.E.
NY PROFESSIONAL ENGINEER Lic. No. 096440
"ALTERATION OF THIS DOCUMENT EXCEPT BY A LICENSED PROFESSIONAL IS ILLEGAL"

DESIGNED BY:	DRAWN BY:	CHECKED BY:	REVIEWED BY:
CJM	CJM	JRM	

PROJECT No:	DATE:	SCALE:
WPSD2203	MARCH 2025	AS SHOWN

CLIENT

WHITE PLAINS CITY SCHOOL DISTRICT

HIGH SCHOOL ADDITION

66-22-00-01-0-016-030

CONTRACT

CONTRACT P
PLUMBING CONSTRUCTION

STATUS

FINAL BID DOCUMENT

SHEET TITLE

PLUMBING
SCHEDULES AND SPECIFICATIONS

DRAWING No.

P 600.01

C:\Users\cmcdermott\Documents\WPSD2203_Central21_M_cmcdermottM42R8.rvt
2/20/2025 10:45:49 AM

HANGER SPACING		
PIPING MATERIAL	MAX. HORIZONTAL (FT)	MAX. VERTICAL (FT)
POLYETHYLENE	2.67	4
PEX	2.67	10
CPVC 1" OR SMALLER	3	10
ABS/PVC/CPVC (>1")	4	10
CAST-IRON	5	15
COPPER (<1-1/2)	6	10
COPPER (≥ 1-1/2")/BRASS)	10	10
STEEL	12	15

HANGER ROD SCHEDULE			
PIPE SIZE	ROD SIZE (DIA.)	PIPE SIZE	ROD SIZE (DIA.)
≤ 2"	3/8"	4" THRU 5"	5/8"
2 1/2" THRU 3 1/2"	1/2"	6" THRU 8"	3/4"

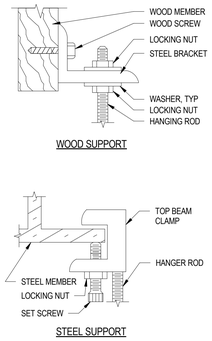

1 **Pipe Hanger Detail**
SCALE: NTS

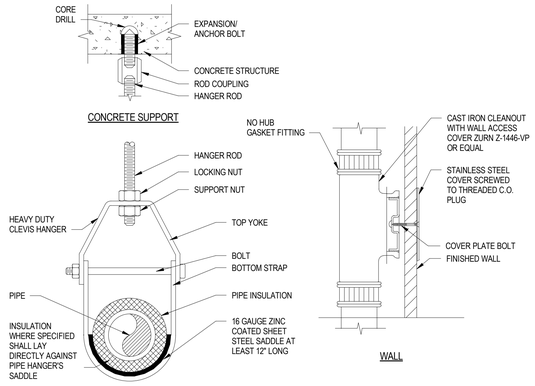

2 **Cleanout Details**
SCALE: NTS

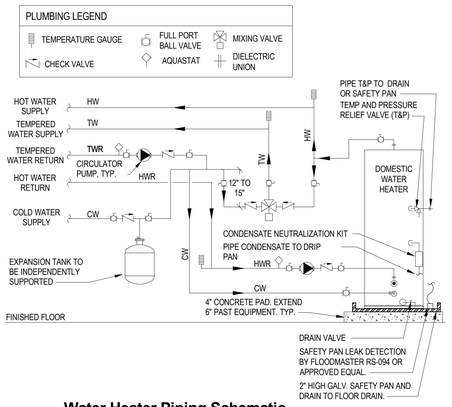

3 **Water Heater Piping Schematic**
SCALE: NTS

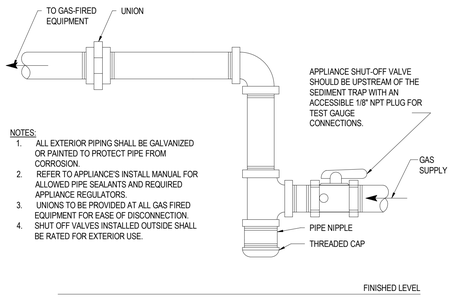

NOTES:
1. ALL EXTERIOR PIPING SHALL BE GALVANIZED OR PAINTED TO PROTECT PIPE FROM CORROSION.
2. REFER TO APPLIANCE'S INSTALL MANUAL FOR ALLOWED PIPE SEALANTS AND REQUIRED APPLIANCE REGULATORS.
3. UNIONS TO BE PROVIDED AT ALL GAS FIRED EQUIPMENT FOR EASE OF DISCONNECTION.
4. SHUT OFF VALVES INSTALLED OUTSIDE SHALL BE RATED FOR EXTERIOR USE.

4 **Gas Connection Detail**
SCALE: NTS

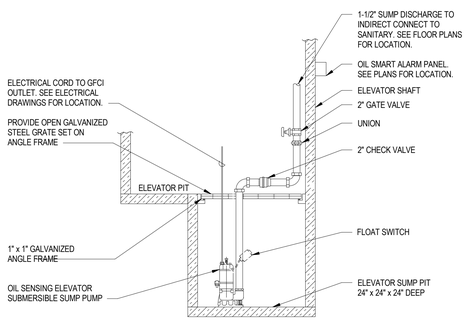

5 **Elevator Sump Pump Detail**
SCALE: NTS

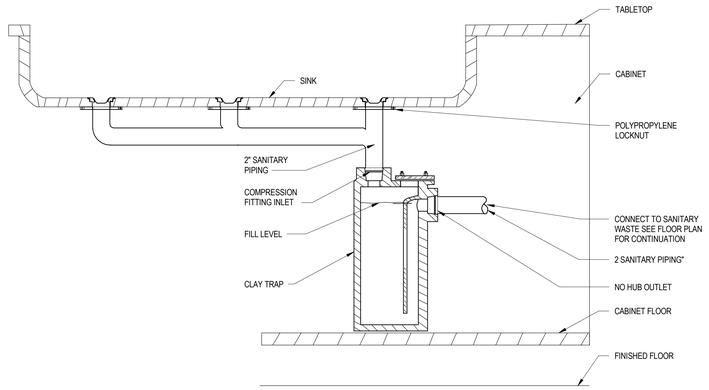

6 **Art Room Clay Trap Detail**
SCALE: NTS

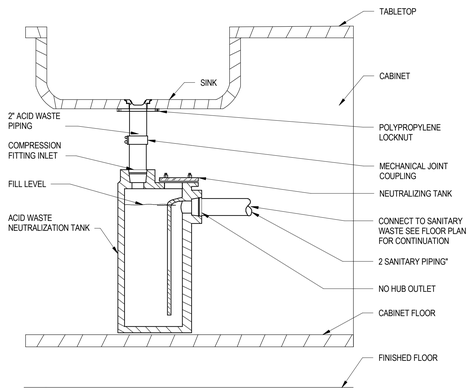

7 **Photo Sink Acid Waste Neutralization Kit Piping Detail**
SCALE: NTS

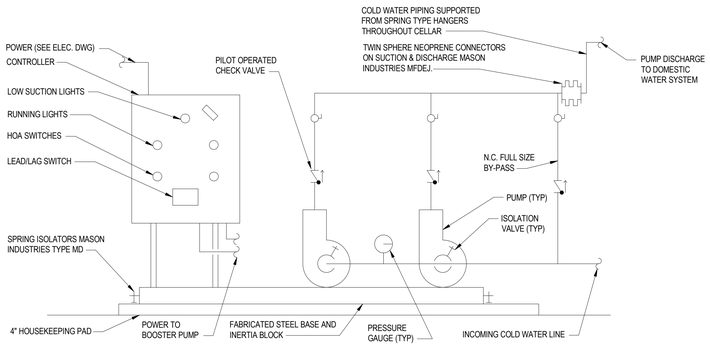

8 **Schematic of Duplex Domestic Water Booster Pump**
SCALE: NTS

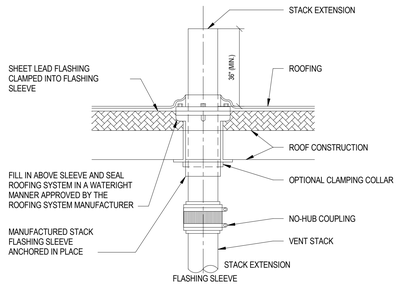

NOTES:
1. FINAL VENT STACK OUTLET LOCATION TO BE 15 FEET (MIN.) AWAY FROM ANY OUTSIDE VENTILATION AIR INTAKE LOCATION, 10 FEET (MIN.) FROM ANY WALL OR STRUCTURE AND 3 (MIN.) FEET ABOVE STRUCTURE.

9 **Vent Through Roof**
SCALE: NTS

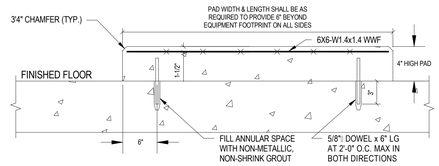

10 **Equipment Pad Detail**
SCALE: NTS

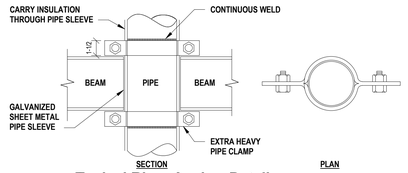

11 **Typical Riser Anchor Detail**
SCALE: NTS

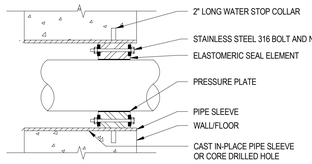

12 **Link-Seal Pipe Penetration Detail**
SCALE: NTS

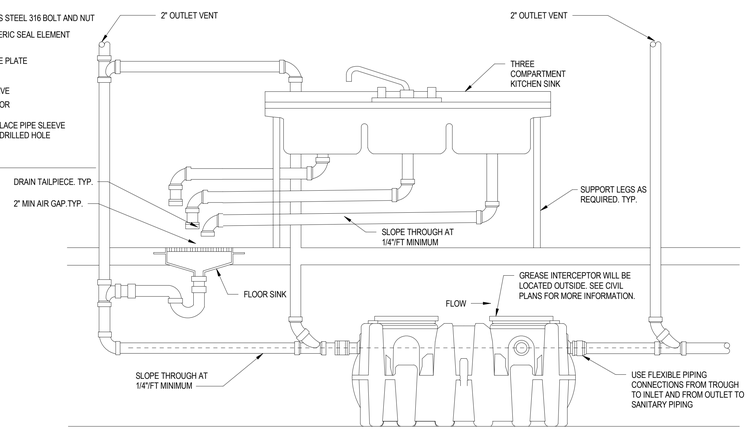

16 **Kitchen Grease Interceptor Detail**
SCALE: NTS

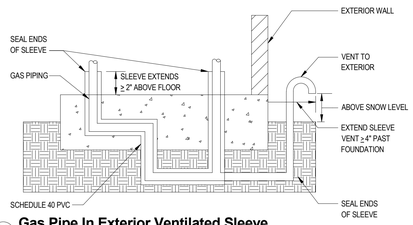

13 **Gas Pipe In Exterior Ventilated Sleeve**
SCALE: NTS

Notes:
DRAIN INSTALLED IN A STEEL DECK WITH INSULATED ROOF. DRAIN IS ILLUSTRATED WITH DOUBLE TOP-SET® DECK PLATE.

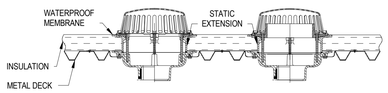

14 **Main Roof and Overflow Drain Combo Detail**
SCALE: NTS

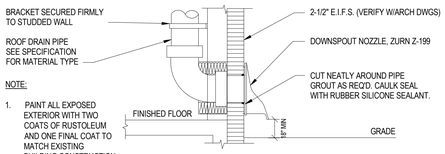

NOTE:
1. PAINT ALL EXPOSED EXTERIOR WITH TWO COATS OF RUSTOLEUM AND ONE FINAL COAT TO MATCH EXISTING BUILDING CONSTRUCTION

15 **Storm Overflow Drain Outlet Detail**
SCALE: NTS

C:\Users\cmodesmo\OneDrive\WPSD\2203_Central\21_M_cmodesmo9M425B.rvt

2/20/2025 10:45:49 AM

H2M architects + engineers
538 Broad Hollow Road, 4th Floor East
Melville, NY 11747
631.756.8000 • www.h2m.com
Land Surveying Certificate of Authorization No.: 0018178
Engineering Certificate of Authorization No.: 0018438

CONSULTANTS:

MARK	DATE	DESCRIPTION
1	10-18-2024	SED ENGINEERING ADDENDUM 1
3	01-10-2025	SED ENGINEERING ADDENDUM 3

STATE OF NEW YORK · JONATHAN RICHARD MURATOR · 086440-1 · LICENSED PROFESSIONAL ENGINEER

JONATHAN R. MURATOR, P.E. 10/31/2027 Exp. Date
AT PROFESSIONAL ENGINEER LIC. No. 086440
"IN TRANSITION BY FIRM DOCUMENT ENTITY BY LICENSED PROFESSIONAL IN LICENSE"

DESIGNED BY:	DRAWN BY:	CHECKED BY:	REVIEWED BY:
CJM	CJM	JRM	-
PROJECT No: WPSD2203	DATE: MARCH 2025	SCALE: AS SHOWN	

CLIENT
WHITE PLAINS CITY SCHOOL DISTRICT

HIGH SCHOOL ADDITION

White Plains Public Schools · WP · REAL LIFE LEARNING

66-22-00-01-0-016-030

CONTRACT
CONTRACT P
PLUMBING CONSTRUCTION

STATUS
FINAL BID DOCUMENT

SHEET TITLE
PLUMBING DETAILS

DRAWING No.
P 601.02

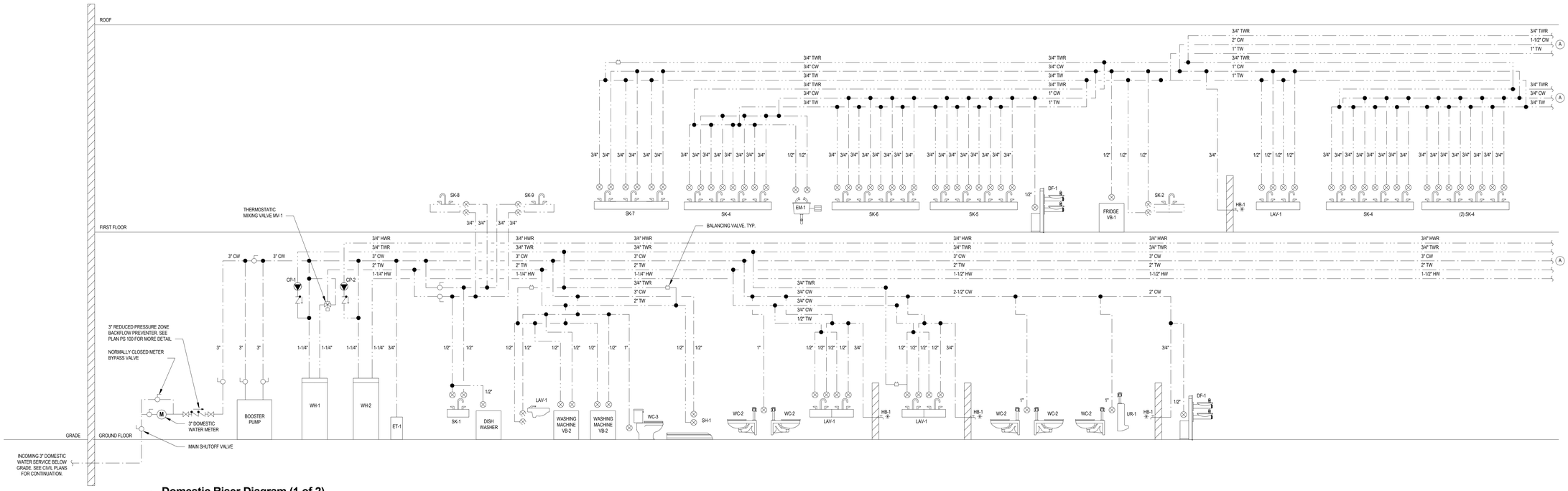

1 **Domestic Riser Diagram (1 of 2)**
SCALE: NTS

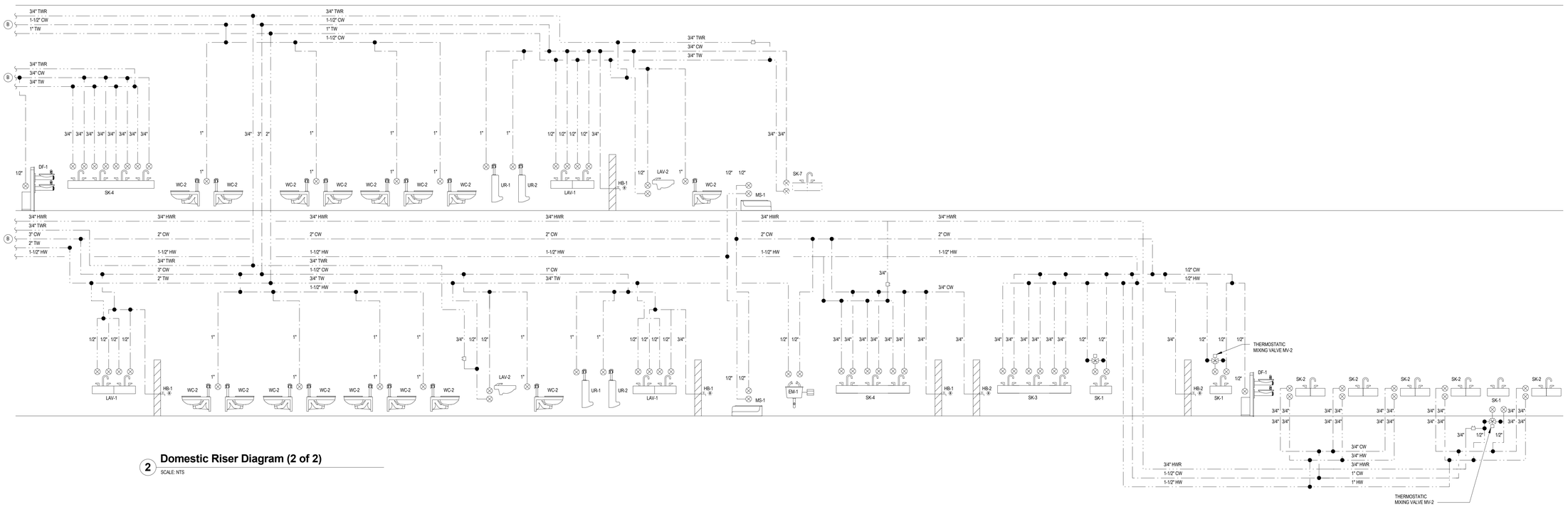

2 **Domestic Riser Diagram (2 of 2)**
SCALE: NTS

H2M architects + engineers

538 Broad Hollow Road, 4th Floor East
Melville, NY 11747
631.756.8000 • www.h2m.com
Land Surveying Certificate of Authorization No.: 0018178
Engineering Certificate of Authorization No.: 0018438

CONSULTANTS:

MARK	DATE	DESCRIPTION
3	01-10-2025	SED ENGINEERING ADDENDUM 3

STATE OF NEW YORK
JONATHAN RICHARD MURATORE
096440-1
LICENSED PROFESSIONAL ENGINEER

10/31/2027
Exp. Date

JONATHAN R. MURATOR, P.E.
NY PROFESSIONAL ENGINEER Lic. No. 096440
"IN TRANSITION OF THIS DOCUMENT EXCEPT BY A LICENSED PROFESSIONAL ENGINEER"

DESIGNED BY:	DRAWN BY:	CHECKED BY:	REVIEWED BY:
CJM	CJM	JRM	
PROJECT No:	DATE:	SCALE:	
WPSD2203	MARCH 2025	AS SHOWN	

CLIENT
WHITE PLAINS CITY SCHOOL DISTRICT

HIGH SCHOOL ADDITION

White Plains Public Schools
WP
REAL LIFE LEARNING

66-22-00-01-0-016-030

CONTRACT
CONTRACT P
PLUMBING CONSTRUCTION

STATUS
FINAL BID DOCUMENT

SHEET TITLE
DOMESTIC RISER DIAGRAM

DRAWING No.
P 602.01

C:\Users\cmodermott\Documents\WPSD2203_Central21_M_cmodermott\M42R8.rvt
2/20/2025 10:45:50 AM

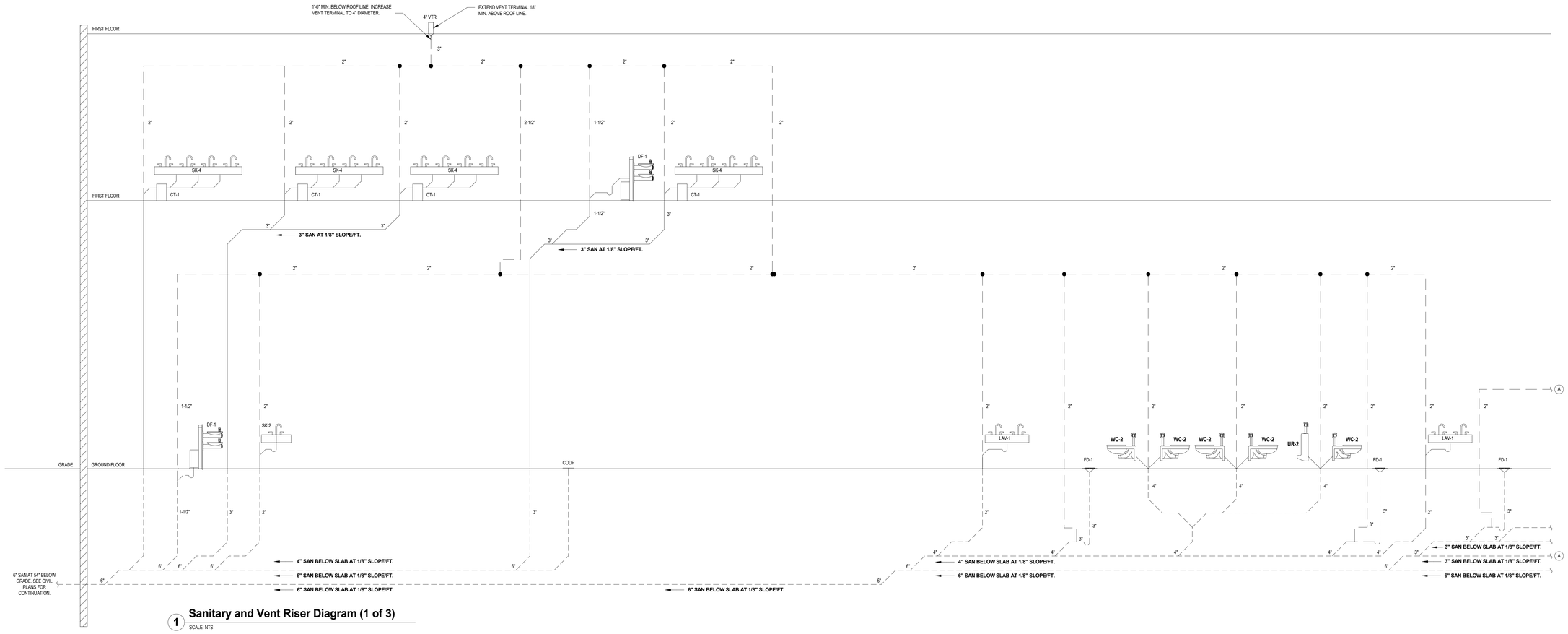

1 Sanitary and Vent Riser Diagram (1 of 3)
SCALE: NTS

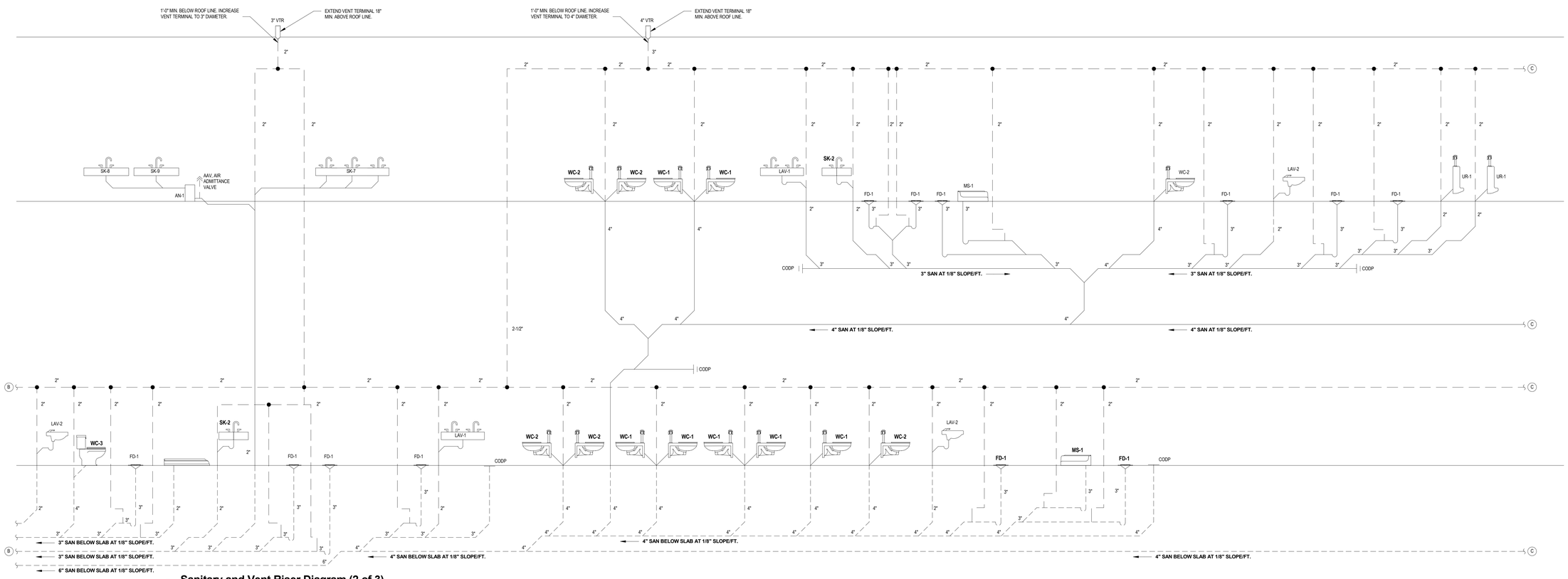

2 Sanitary and Vent Riser Diagram (2 of 3)
SCALE: NTS

H2M architects + engineers

538 Broad Hollow Road, 4th Floor East
Melville, NY 11747
631.756.8000 • www.h2m.com
Land Surveying Certificate of Authorization No.: 0018178
Engineering Certificate of Authorization No.: 0018438

CONSULTANTS:

MARK	DATE	DESCRIPTION
3	01-10-2025	SED ENGINEERING ADDENDUM 3

STATE OF NEW YORK · JONATHAN RICHARD MURATORE · 096440-1 · LICENSED PROFESSIONAL ENGINEER

10/31/2027
Exp. Date

JONATHAN R. MURATOR, P.E.
NY PROFESSIONAL ENGINEER Lic. No. 096440
"IN TRANSITION OF THIS DOCUMENT EXCEPT BY A LICENSED PROFESSIONAL ENGINEER"

DESIGNED BY:	DRAWN BY:	CHECKED BY:	REVIEWED BY:
CJM	CJM	JRM	
PROJECT No:	DATE:	SCALE:	
WPSD2203	MARCH 2025	AS SHOWN	

CLIENT

WHITE PLAINS CITY SCHOOL DISTRICT

HIGH SCHOOL ADDITION

White Plains Public Schools · WP · REAL LIFE LEARNING

66-22-00-01-0-016-030

CONTRACT
CONTRACT P
PLUMBING CONSTRUCTION

STATUS
FINAL BID DOCUMENT

SHEET TITLE
SANITARY, VENT AND KITCHEN WASTE RISER DIAGRAM (1 OF 2)

DRAWING No.
P 603.01

C:\Users\cmodermott\Documents\WPSD2203_Central21_M_cmodermott\M42R8.rvt
2/20/2025 10:45:50 AM

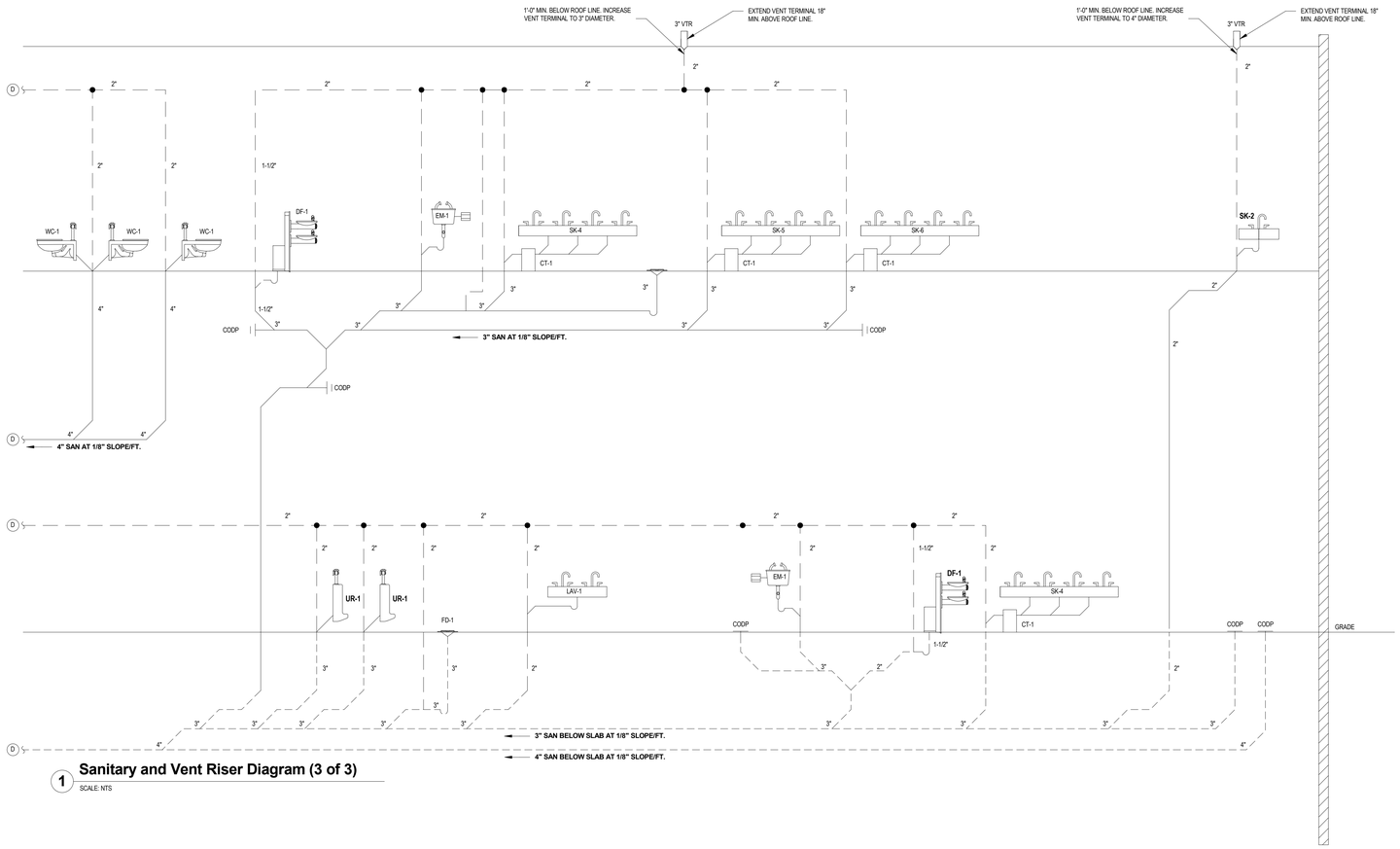

1 **Sanitary and Vent Riser Diagram (3 of 3)**
SCALE: NTS

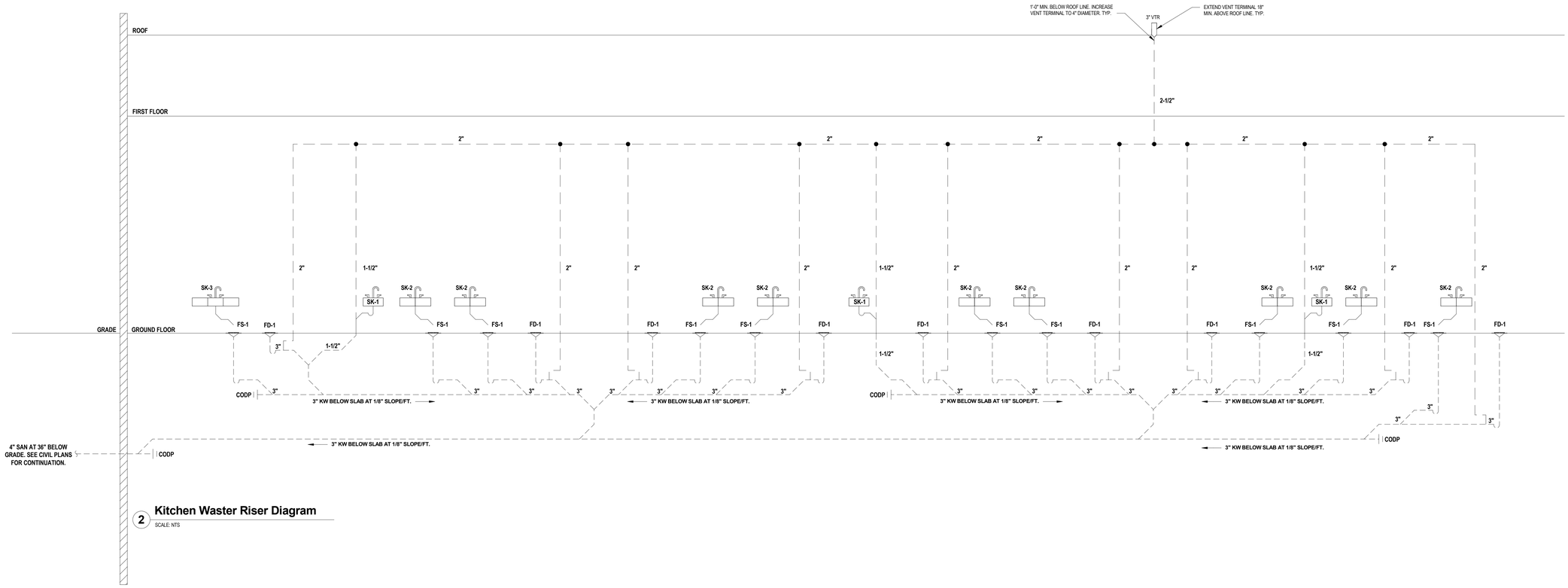

2 **Kitchen Waster Riser Diagram**
SCALE: NTS

H2M architects + engineers
538 Broad Hollow Road, 4th Floor East
Melville, NY 11747
631.756.8000 • www.h2m.com
Land Surveying Certificate of Authorization No.: 0018178
Engineering Certificate of Authorization No.: 0018438

CONSULTANTS:

MARK	DATE	DESCRIPTION
3	01-10-2025	SED ENGINEERING ADDENDUM 3

STATE OF NEW YORK
JONATHAN RICHARD MURATORE
096440-1
LICENSED PROFESSIONAL ENGINEER

10/31/2027
Exp. Date

JONATHAN R. MURATOR, P.E.
NY PROFESSIONAL ENGINEER Lic. No. 096440
"IN TRANSITION OF THIS DOCUMENT EXCEPT BY A LICENSED PROFESSIONAL ENGINEER, IS A CLIENT."

DESIGNED BY:	DRAWN BY:	CHECKED BY:	REVIEWED BY:
CJM	CJM	JRM	
PROJECT No:	DATE:	SCALE:	
WPSD2203	MARCH 2025	AS SHOWN	

CLIENT
WHITE PLAINS CITY SCHOOL DISTRICT

HIGH SCHOOL ADDITION

White Plains Public Schools
WP
REAL LIFE LEARNING

66-22-00-01-0-016-030

CONTRACT
CONTRACT P
PLUMBING CONSTRUCTION

STATUS
FINAL BID DOCUMENT

SHEET TITLE
SANITARY, VENT AND KITCHEN WASTER RISER DIAGRAM (2 OF 2)

DRAWING No.
P 604.01

C:\Users\cmodermott\Documents\WPSD2203_Central21_M_cmodermott\M42R8.rvt
2/20/2025 10:45:50 AM

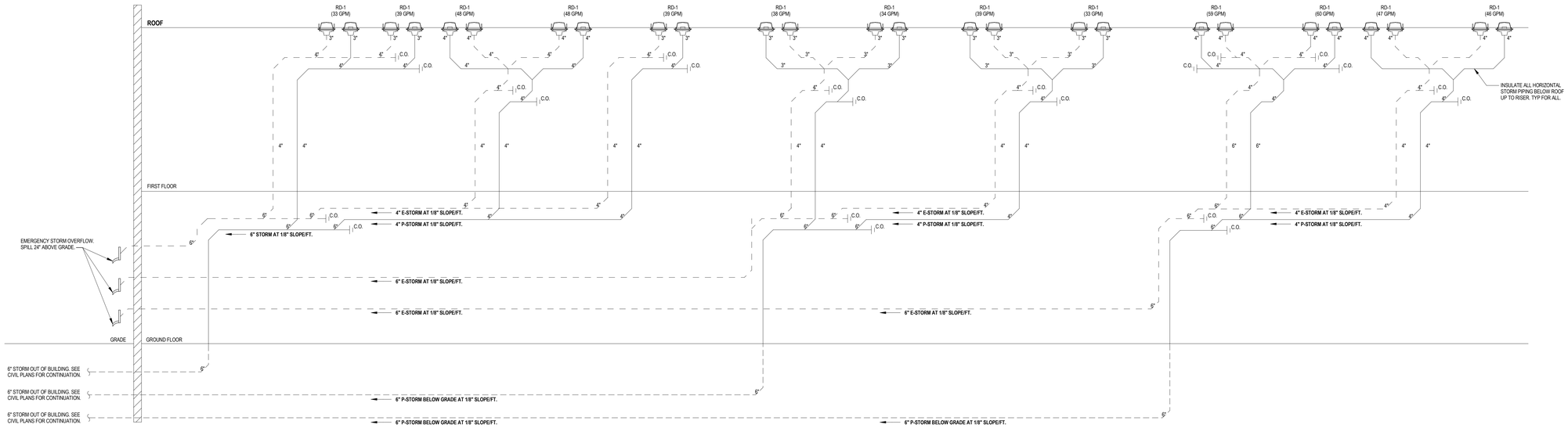

1 Storm Riser Diagram (1 of 2)

SCALE: NTS

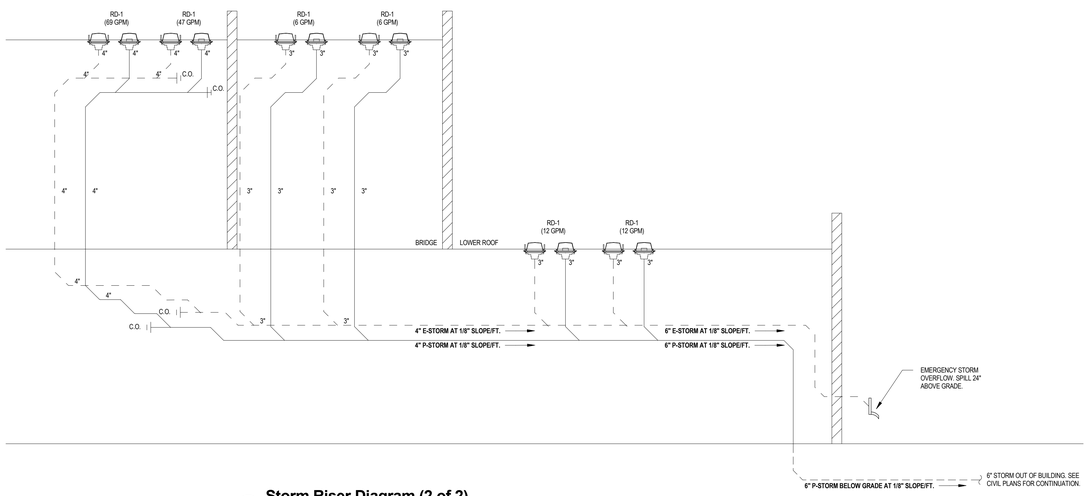

2 Storm Riser Diagram (2 of 2)

SCALE: NTS

C:\Users\jmoderno\AtDocuments\WPSD2203_Central21_M_jmoderno@M4298.rvt

2/20/2025 10:45:50 AM

H2M architects + engineers

538 Broad Hollow Road, 4th Floor East
Melville, NY 11747
631.756.8000 • www.h2m.com
Land Surveying Certificate of Authorization No.: 0018178
Engineering Certificate of Authorization No.: 0018438

CONSULTANTS:

MARK	DATE	DESCRIPTION

STATE OF NEW YORK · JONATHAN RICHARD MURATOR · 086440-1 · LICENSED PROFESSIONAL ENGINEER

JONATHAN R. MURATOR, P.E.
NY PROFESSIONAL ENGINEER Lic. No. 086440

19310927 Exp. Date

THE TRACING IS THE DOCUMENT EXCEPT BY LICENSED PROFESSIONAL ENGINEER.

DESIGNED BY:	DRAWN BY:	CHECKED BY:	REVIEWED BY:
CJM	CJM	JRM	-
PROJECT No: WPSD2203	DATE: MARCH 2025	SCALE: AS SHOWN	

CLIENT

WHITE PLAINS CITY SCHOOL DISTRICT

HIGH SCHOOL ADDITION

White Plains Public Schools · WP · REAL LIFE LEARNING

66-22-00-01-0-016-030

CONTRACT

CONTRACT P
PLUMBING CONSTRUCTION

STATUS

FINAL BID DOCUMENT

SHEET TITLE

PLUMBING
BUILDING
STORM RISER DIAGRAM

DRAWING No.

P 605.00

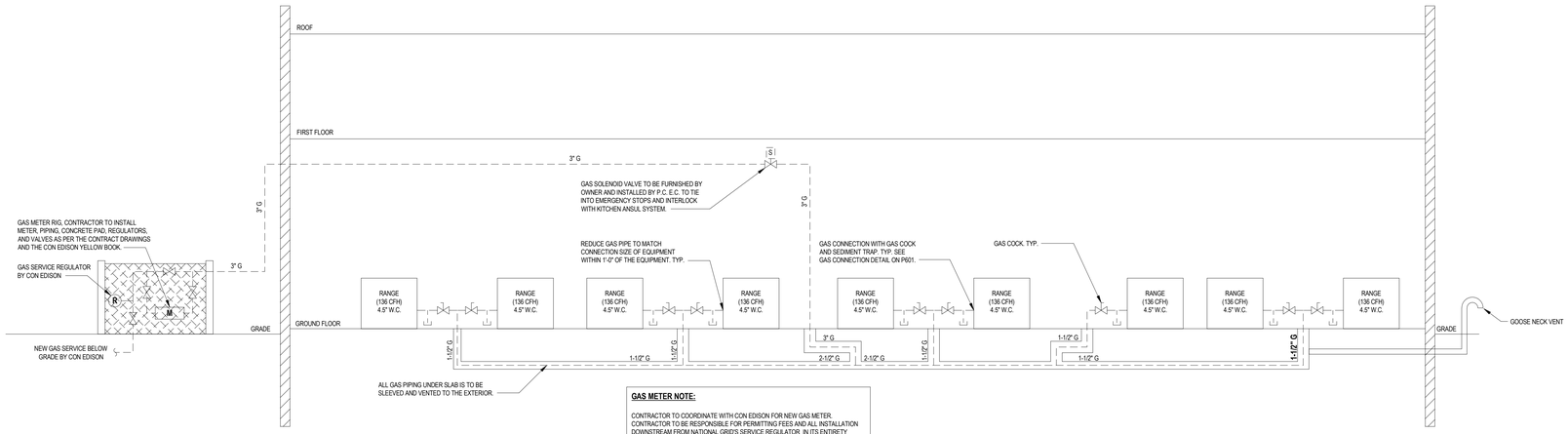

GAS METER NOTE:

CONTRACTOR TO COORDINATE WITH CON EDISON FOR NEW GAS METER. CONTRACTOR TO BE RESPONSIBLE FOR PERMITTING FEES AND ALL INSTALLATION DOWNSTREAM FROM NATIONAL GRID'S SERVICE REGULATOR IN ITS ENTIRETY INCLUDING THE GAS METER, RIG, PIPING, VALVES, CONCRETE PAD, AND BOLLARDS. SEE NATIONAL GRID BLUE BOOK FOR INSTALLATION DETAILS.

1 Gas Riser Diagram

SCALE: NTS

H2M architects + engineers

538 Broad Hollow Road, 4th Floor East
Melville, NY 11747
631.756.8000 • www.h2m.com
Land Surveying Certificate of Authorization No.: 0018178
Engineering Certificate of Authorization No.: 0018438

CONSULTANTS:

MARK	DATE	DESCRIPTION

STATE OF NEW YORK · JONATHAN RICHARD MURATORE · 086440-1 · LICENSED PROFESSIONAL ENGINEER

19310287
Exp. Date

JONATHAN R. MURATOR, P.E.
BY PROFESSIONAL ENGINEER LIC. No. 086440
THE CREATION OF THIS DOCUMENT EXCEPT BY A LICENSED PROFESSIONAL IS ILLEGAL

DESIGNED BY:	DRAWN BY:	CHECKED BY:	REVIEWED BY:
CJM	CJM	JRM	-
PROJECT No: WPSD2203	DATE: MARCH 2025	SCALE: AS SHOWN	

CLIENT

WHITE PLAINS CITY SCHOOL DISTRICT

HIGH SCHOOL ADDITION

White Plains Public Schools · WP · REAL LIFE LEARNING

66-22-00-01-0-016-030

CONTRACT

CONTRACT P
PLUMBING CONSTRUCTION

STATUS

FINAL BID DOCUMENT

SHEET TITLE

PLUMBING BUILDING GAS RISER DIAGRAM

DRAWING No.

P 606.00

C:\Users\cmodesmo\8Documents\WPSD2203_Central21_M_cmodesmo8A42R8.rvt

2/20/2025 10:45:51 AM

ABBREVIATIONS

AFF	ABOVE FINISHED FLOOR
BCU	BUILDING CONTROL UNIT
BTU	BRITISH THERMAL UNIT
CFH	CUBIC FEET PER HOUR
CFM	CUBIC FEET PER MINUTE
CLG	CEILING
COMM.	COMMUNICATION
CV	CONTROL VALVE
(D)	DEMOLISHED
DB	DRY BULB
DCV	DEMAND CONTROLLED VENTILATION
DEG. F	DEGREES FAHRENHEIT
DIA	DIAMETER
DX	DIRECT EXPANSION
"E"	ELECTRICAL CONTRACTOR
(E)	EXISTING
EA	EACH
EAT	ENTERING AIR TEMPERATURE
EER	ENERGY EFFICIENCY RATING
ESP	EXTERNAL STATIC PRESSURE
FAI	FRESH AIR INTAKE
FD	FLOOR DRAIN
FLA	FULL LOAD AMPS
FT. H2O	FEET OF WATER
'G'	GENERAL CONSTRUCTION CONTRACT
GPH	GALLONS PER HOUR
GPM	GALLONS PER MINUTE
H	HEIGHT
'H'	HVAC CONTRACT
HP	HORSEPOWER
IN.	INCHES
IN. W.C.	INCHES WATER COLUMN (WATER GUAGE)
KW	KILOWATTS
L	LENGTH
LAT	LEAVING AIR TEMPERATURE
LBS	POUNDS
LCD	LIQUID CRYSTAL DISPLAY
LDB	LEAVING DRY BULB TEMPERATURE
LWB	LEAVING WET BULB TEMPERATURE
LWT	LEAVING WATER TEMPERATURE
M	METER
MAX	MAXIMUM
MBH	1,000 BTU PER HOUR
MCA	MINIMUM CIRCUIT AMPACITY
MIN	MINIMUM
MFA	MANUFACTURER
N.C.	NORMALLY CLOSED
N.O	NORMALLY OPEN
NFPA	NATIONAL FIRE PROTECTION AGENCY
NPT	NATIONAL PIPE THREAD
NTS	NOT TO SCALE
OAI	OUTSIDE AIR INTAKE
OD	OUTSIDE DIAMETER
OED	OPEN ENDED DUCT
'P'	PLUMBING CONTRACT
PD	PRESSURE DROP
PSIG	LBS / PER SQUARE INCH (GUAGE PRESSURE)
RD	ROOF DRAIN
RPM	REVOLUTIONS PER MINUTE
RPZ	REDUCED PRESSURE ZONE
SAT	SUPPLY AIR TEMPERATURE
SEER	SEASONAL ENERGY EFFICIENCY RATING
TEMP	TEMPERATURE
TG	TRANSFER GRILLE
TYP	TYPICAL
VFD	VARIABLE FREQUENCY DRIVE
W	WIDTH
WB	WET BULB
WMS	WIRE MESH SCREEN

DUCTWORK LEGEND

SYMBOL	ABBREV	DESCRIPTION
		NEW DUCTWORK WITH 45 DEGREE TAKE OFF
	VD	VOLUME DAMPER
	CD	ROUND SUPPLY CEILING DIFFUSER
	SEE AIR DEVICE SCHEDULE	SIDEWALL SUPPLY, RETURN OR EXHAUST
	SEE AIR DEVICE SCHEDULE	SQUARE SUPPLY CEILING DIFFUSER
	SEE AIR DEVICE SCHEDULE	CEILING RETURN OR EXHAUST GRILLE
		FLEX DUCT
	FC	FLEXIBLE CONNECTION
		TURNING VANES
		RECTANGULAR TO ROUND TRANSITION
	AL	ACOUSTICAL LINING
		END CAP
	SEE AIR DEVICE SCHEDULE	SUPPLY DIFFUSER WITH DIRECTIONAL FLOW (SOLID HATCH INDICATES BLANK OFF PANEL)
		SUPPLY DUCT DROP
		RETURN/EXHAUST DUCT DROP
		SUPPLY DUCT RISE
		RETURN/EXHAUST DUCT RISE
CM RAL D WP S	DSD	DUCT SMOKE DETECTOR (SUPPLY)
CM RAL D WP R	DSD	DUCT SMOKE DETECTOR (RETURN)
M	MD	MOTORIZED DAMPER WITH ACTUATOR
	FD/AD	FIRE DAMPER WITH ACCESS DOOR
	FSD/AD	FIRE SMOKE DAMPER WITH ACCESS DOOR
		WORK TO BE REMOVED
		POINT OF DISCONNECTION FROM EXISTING
		POINT OF RECONNECTION TO EXISTING

CONTROLS LEGEND

SYMBOL	ABBREV	DESCRIPTION
C		CARBON MONOXIDE SENSOR
T		THERMOSTAT
S		DIGITAL TEMPERATURE SENSOR
H		HUMIDITY SENSOR
C2		CARBON DIOXIDE SENSOR

PIPING LEGEND

SYMBOL	ABBREV	DESCRIPTION
		NEW WORK
		PIPING DOWN/ PIPING UP
		BALL VALVE WITH HOSE END CONNECTION
	TH	THERMOMETER
	U	UNION
	FPC	FLEXIBLE PIPE CONNECTION/ FLEX PIPE
		DIRECTION OF FLOW
	PSR	PRESSURE SAFETY AND RELIEF VALVE
	PRV	PRESSURE REDUCING VALVE
	BV	BALL VALVE
	BA	BALANCING VALVE
	BFV	BUTTERFLY VALVE
		TEMPERATURE SENSOR WITH THERMOWELL
	GA	GATE VALVE
	GB	GLOBE VALVE
	AV	AUTOMATIC AIR VENT
	CV	2-WAY CONTROL VALVE
	CV	3-WAY CONTROL VALVE
		PLUG VALVE
	STR	STRAINER
	FD	FLOOR DRAIN
S		AIR SEPARATOR
F&T		STEAM TRAPS (INDICATE TYPE)
	CH	CHECK VALVE
	PG	PRESSURE GAUGE WITH GAUGE COCK
	RED	REDUCER
CO.	CO	CLEANOUT END CAP
		CAPPED PIPE
		PUMP
		WORK TO BE REMOVED
		POINT OF DISCONNECTION FROM EXISTING
		POINT OF RECONNECTION TO EXISTING
	TDV	TRIPLE DUTY VALVE

GENERAL NOTES

1. PROVIDE ALL MATERIALS AND EQUIPMENT AND PERFORM ALL LABOR REQUIRED TO INSTALL COMPLETE AND OPERABLE MECHANICAL SYSTEMS AS INDICATED ON THE DRAWINGS, AS SPECIFIED AND AS REQUIRED BY CODE.
2. THE CONTRACTOR, BY PRESENTING THEIR BID FOR THE WORK, REPRESENTS THAT HE/SHE HAS INSPECTED THE SITE AND IS COMPLETELY FAMILIAR WITH THE SCOPE OF WORK AND ALL FIELD CONDITIONS RELATED TO, AND AFFECTING THE WORK AND ITS PERFORMANCE. EXCEPTIONS AFFECTING THE WORK AND ITS PERFORMANCE, OR CONFLICTS BETWEEN FIELD CONDITIONS, SHALL BE BROUGHT TO THE ATTENTION OF THE ARCHITECT PRIOR TO THE SUBMISSION OF BIDS.
3. PERFORM ALL WORK IN ACCORDANCE WITH THE 2020 PLUMBING CODE, 2020 FIRE CODE, 2020 MECHANICAL CODE, 2020 ENERGY CONSERVATION CONSTRUCTION CODE, AND 2020 FUEL GAS CODE OF NEW YORK CITY AND THE REQUIREMENTS OF THE LOCAL AUTHORITIES HAVING JURISDICTION.
4. COMPLY WITH THE NATIONAL ELECTRIC CODE AND THE REQUIREMENTS OF DIVISION 26 FOR ALL ELECTRICAL INSTALLATIONS.
5. FIRE STOP ALL OPENINGS IN FIRE RATED CONSTRUCTION FOR PIPING, DUCTWORK, CONDUIT, ETC. PROVIDE FIRE DAMPERS AND ACCESS DOORS IN ALL OPENINGS IN FIRE RATED FLOORS, PARTITIONS, AND WALLS FOR DUCTWORK AS PER THE MECHANICAL CODE OF NEW YORK CITY. (SEE ARCHITECTURAL DRAWINGS FOR LOCATIONS OF FIRE RATED CONSTRUCTION.)
6. DO NOT SCALE DRAWINGS. DRAWINGS FOR HVAC WORK ARE DIAGRAMMATIC AND ARE INTENDED TO CONVEY SCOPE AND GENERAL ARRANGEMENT ONLY. THE LOCATIONS OF ALL ITEMS SHOWN ON THE DRAWINGS OR CALLED FOR IN THE SPECIFICATIONS THAT ARE NOT DEFINITELY FIXED BY DIMENSIONS ARE APPROXIMATE. COORDINATE CONTRACT DOCUMENTS, PROJECT REQUIREMENTS, WORK OF OTHERS, AND EQUIPMENT AND MATERIALS PURCHASED WITH FIELD DIMENSIONS. INSTALL ALL EQUIPMENT AS PER MANUFACTURER'S REQUIREMENTS TO PROVIDE PROPER CLEARANCE FOR INSTALLATION, OPERATION, AND MAINTENANCE. CONTRACTOR'S INTENDED MEANS AND METHODS OF INSTALLATION AND CONTRACTOR'S FABRICATED ITEMS SHALL ENSURE A PROPER "FIT" AND INSTALLATION. BRING ANY CONFLICTS TO THE ATTENTION OF THE ARCHITECT/ENGINEER DURING THE SUBMITTAL PHASE FOR RESOLUTION PRIOR TO PURCHASING ANY EQUIPMENT.
7. MAINTAIN MAXIMUM HEADROOM AND SPACE CONDITIONS AT ALL POINTS. WHERE HEADROOM AND SPACE CONDITIONS APPEAR INADEQUATE, NOTIFY THE ARCHITECT/ENGINEER PRIOR TO PROCEEDING WITH INSTALLATION. MAINTAIN A MINIMUM OF 6'-8" CLEARANCE FROM FINISHED FLOOR TO UNDERSIDE OF PIPES, DUCTS, CONDUITS, SUSPENDED EQUIPMENT, ETC., THROUGHOUT ACCESS ROUTES IN MECHANICAL ROOMS.
8. FIELD VERIFY AND COORDINATE ALL DUCT AND PIPING DIMENSIONS BEFORE FABRICATION. MAKE MODIFICATIONS IN THE LAYOUT AS NEEDED TO PREVENT CONFLICT WITH WORK OF OTHER TRADES OR FOR PROPER EXECUTION OF THE WORK. OBTAIN THE APPROVAL OF THE ARCHITECT/ENGINEER FOR MODIFICATIONS.
9. PROVIDE PRODUCTS OF ONE MANUFACTURER WHERE TWO OR MORE ITEMS OF THE SAME TYPE OF MATERIAL OR EQUIPMENT IS REQUIRED.
10. INSTALL ALL EQUIPMENT AND APPURTENANCES IN ACCORDANCE WITH MANUFACTURER'S RECOMMENDATIONS, CONTRACT DOCUMENTS, AND APPLICABLE CODES AND REGULATIONS. REFER TO DETAILS FOR ADDITIONAL PIPING AND EQUIPMENT INSTALLATION REQUIREMENTS.
11. LOCATE ALL TEMPERATURE, PRESSURE, AND FLOW MEASURING DEVICES IN ACCESSIBLE LOCATIONS WITH STRAIGHT SECTION OF PIPE OR DUCT UP- AND DOWNSTREAM AS RECOMMENDED BY THE MANUFACTURER TO ENSURE MANUFACTURER CERTIFIED ACCURACY.
12. COORDINATE ALL EQUIPMENT CONNECTIONS WITH MANUFACTURER'S CERTIFIED DRAWINGS. COORDINATE AND PROVIDE ALL PIPING AND DUCT TRANSITIONS REQUIRED FOR FINAL CONNECTIONS TO EQUIPMENT.
13. COORDINATE LOCATIONS AND SIZES OF ALL FLOOR, WALL, AND ROOF OPENINGS WITH ALL OTHER TRADES. COORDINATE ALL PIPING AND EQUIPMENT SUPPORTED FROM STRUCTURE WITH GENERAL CONSTRUCTION WORK.
14. COMPLETE ALL PRESSURE TESTS BEFORE ANY MECHANICAL EQUIPMENT, DUCTWORK, OR PIPING INSULATION IS APPLIED.
15. TESTING, ADJUSTING, AND BALANCING AGENCY SHALL BE A MEMBER OF THE ASSOCIATED AIR BALANCE COUNCIL (AABC) OR THE NATIONAL ENVIRONMENTAL BALANCING BUREAU (NEBB). PERFORM ALL TESTING, ADJUSTING, AND BALANCING IN ACCORDANCE WITH THE SPECIFICATIONS.
16. MAKE ALL ATTACHMENTS TO JOISTS, TRUSSES, OR JOIST GIRDERS AT PANEL POINTS. PROVIDE BEAM CLAMPS MEETING MSS STANDARDS. THE USE OF C-CLAMPS IS NOT PERMITTED.
17. PROVIDE CONCRETE PADS A MINIMUM OF 6 INCHES HIGH FOR ALL FLOOR MOUNTED EQUIPMENT. EXTEND PAD 4 INCHES BEYOND THE EQUIPMENT ON ALL SIDES.
18. INSTALL PIPING, DUCTWORK, AND CONDUIT CONCEALED IN AREAS HAVING HUNG CEILINGS AND/OR FURRED SPACES UNLESS OTHERWISE INDICATED ON THE DRAWINGS.
19. FURNISH AND INSTALL ALL NECESSARY CONTROL WIRING, CONDUIT, AND ACCESSORIES AS REQUIRED TO PROVIDE FULLY FUNCTIONING SYSTEMS AND SEQUENCES OF OPERATION.
20. PROVIDE ALL BMS HARDWARE (FIELD CONTROLLERS, EXPANSION MODULES, SENSORS, ETC), SOFTWARE UPGRADES AND PROGRAMMING AS REQUIRED TO PROVIDE A COMPLETE FUNCTIONING SYSTEM TO PERFORM THE SPECIFIED AND REQUIRED CONTROL SEQUENCES.

WORK IN EXISTING AREAS

1. EXISTING CONDITIONS, INCLUDING EQUIPMENT, DUCT AND PIPE SIZES AND LOCATIONS, INDICATED ON THE DRAWINGS ARE DIAGRAMMATIC. CONFIRM ALL EXISTING CONDITIONS PRIOR TO PROCEEDING WITH THE WORK.
2. CUT AND PATCH EXISTING CONSTRUCTION AS REQUIRED FOR THE PERFORMANCE OF THE WORK. PERFORM ALL CUTTING AND PATCHING WORK IN A MANNER SUCH THAT ANY EXISTING WARRANTEES/GUARANTEES ARE NOT VOIDED. USE QUALIFIED PERSONNEL IN PERFORMANCE OF THE WORK.
3. WHERE THEY ARE REQUIRED TO BE REMOVED FOR THE EXECUTION OF NEW UNIT VENTILATOR WORK, EXISTING FIN TUBE RADIATION COVERS ARE TO BE RETAINED TO BE REUSED TO COVER EXPOSED PIPING IN THE CLASSROOMS.

CONTRACT 'M' SCOPE NOTES

1. PROVIDE ALL LOUVERS FOR INSTALLATION BY CONTRACT 'G'. SUBMIT LOUVER COLOR AND CONFIGURATION TO THE ARCHITECT/ENGINEER FOR APPROVAL.
2. INSTALL SMOKE DETECTORS IN DUCTWORK FOR AIR HANDLING UNITS RATED AT 2,000 CFM OR GREATER. SMOKE DETECTOR SUPPLY AND WIRING IS PART OF CONTRACT 'E'.
3. FURNISH AND INSTALL ALL NECESSARY CONTROL WIRING, CONDUIT, AND ACCESSORIES AS REQUIRED TO PROVIDE FULLY FUNCTIONING SYSTEMS AND SEQUENCES OF OPERATION.
4. FURNISH ALL LINTELS FOR DUCT AND PIPE PENETRATIONS IN INTERIOR MASONRY WALLS FOR INSTALLATION BY CONTRACT 'G'.
5. FURNISH ALL SLEEVES FOR PIPE AND CONDUIT FLOOR, WALL, PARTITION, AND ROOF PENETRATIONS FOR INSTALLATION BY CONTRACT 'G'.
6. FURNISH ALL CURBS FOR ALL ROOF MOUNTED EQUIPMENT AND DUCT PENETRATIONS FOR INSTALLATION BY CONTRACT 'G'.
7. REMOVE CHASE ENCLOSURE COVER WHEN PERFORMING WORK IN ANY CHASE, AND REINSTALL THE CHASE ENCLOSURE COVER WHEN WORK IS COMPLETE.

LEGENDS/ABBREVIATIONS NOTES

1. ABBREVIATIONS AND SYMBOLS ON THIS SHEET DO NOT DEFINE THE SCOPE OF WORK.

H2M architects + engineers
538 Broad Hollow Road, 4th Floor East
Melville, NY 11747
631.756.8000 • www.h2m.com
Land Surveying Certificate of Authorization No.: 0018178
Engineering Certificate of Authorization No.: 0018438

CONSULTANTS:

MARK	DATE	DESCRIPTION

STATE OF NEW YORK · BRIAN CASTELLI · 099167 · LICENSED PROFESSIONAL ENGINEER

DESIGNED BY:	DRAWN BY:	CHECKED BY:	REVIEWED BY:
RVS	RVS	BMC	-
PROJECT No: WPSD2203	DATE: FEBRUARY 2025	SCALE: AS SHOWN	

CLIENT

WHITE PLAINS CITY SCHOOL DISTRICT

HIGH SCHOOL ADDITION

White Plains Public Schools · WP · REAL LIFE LEARNING

66-22-00-01-0-016-030

CONTRACT

CONTRACT M

STATUS

FINAL BID DOCUMENT

SHEET TITLE

HVAC BUILDING GENERAL HVAC NOTES, LEGENDS, AND ABBREVIATIONS

DRAWING No.

M 001.00

C:\Users\bcastelli\Documents\WPSD2203_Central21_M_bcastelliTRBCQ.rvt
3/21/2025 5:09:18 PM

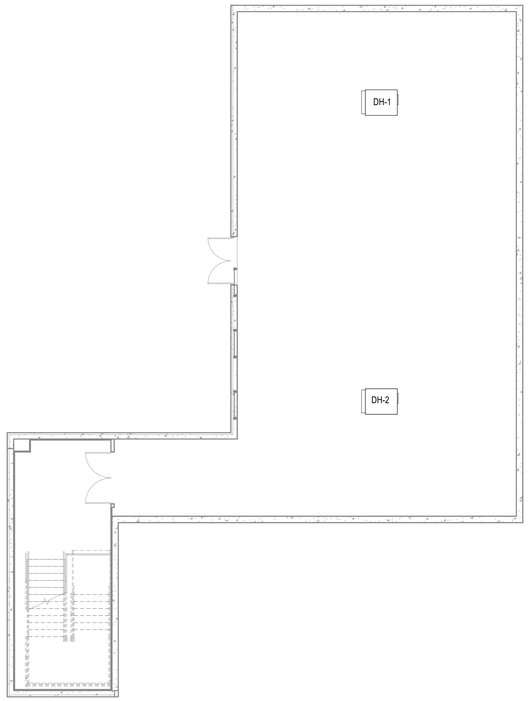

1 **Basement Ductwork Plan**
SCALE: 1/8" = 1'-0"

GENERAL NOTES:

1. DO NOT SCALE DRAWINGS. LINE WORK SHOWN IS SCHEMATIC. CONTRACTOR SHALL PROVIDE SHOP DRAWINGS BASED ON DESIGN INTENT, SURVEY OF EXISTING CONDITIONS, AND COORDINATION WITH OTHER TRADES.
2. INSTALL ALL EQUIPMENT IN ACCORDANCE WITH MANUFACTURER'S REQUIRED MAINTENANCE CLEARANCES AND PREVAILING CODE.
3. DEHUMIFIER DH-1 AND DH-2 ARE QUEST MODEL 506 OVERHEAD DEHUMIDIFIER, 208V MODEL.
4. CONTRACTOR TO FURNISH AND INSTALL 3/4" COPPER CONDENSATE DRAIN PIPING FROM DEHUMIDIFCATION UNIT TO OUTSIDE AREA WAY. CONDENSATE TO DRAIN INTO AREA WAY DRAIN.

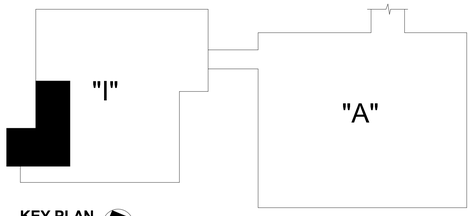

KEY PLAN
SCALE: NTS

H2M architects + engineers
538 Broad Hollow Road, 4th Floor East
Melville, NY 11747
631.756.8000 • www.h2m.com
Land Surveying Certificate of Authorization No.: 0018178
Engineering Certificate of Authorization No.: 0018438

CONSULTANTS:

MARK	DATE	DESCRIPTION

STATE OF NEW YORK · BRIAN CASTELLI · 099167 · LICENSED PROFESSIONAL ENGINEER

DESIGNED BY:	DRAWN BY:	CHECKED BY:	REVIEWED BY:
RVS	RVS	BMC	-
PROJECT No: WPSD2203	DATE: FEBRUARY 2025	SCALE: AS SHOWN	

CLIENT
WHITE PLAINS CITY SCHOOL DISTRICT

HIGH SCHOOL ADDITION

White Plains Public Schools · WP · REAL LIFE LEARNING

66-22-00-01-0-016-030

CONTRACT
CONTRACT M

STATUS
FINAL BID DOCUMENT

SHEET TITLE
BASEMENT HVAC DUCTWORK PLAN

DRAWING No.
M 100.00

C:\Users\bcastelli\Documents\WPSD2203_Central21_M_bcastelliTRSICD.rvt
3/21/2025 5:09:18 PM

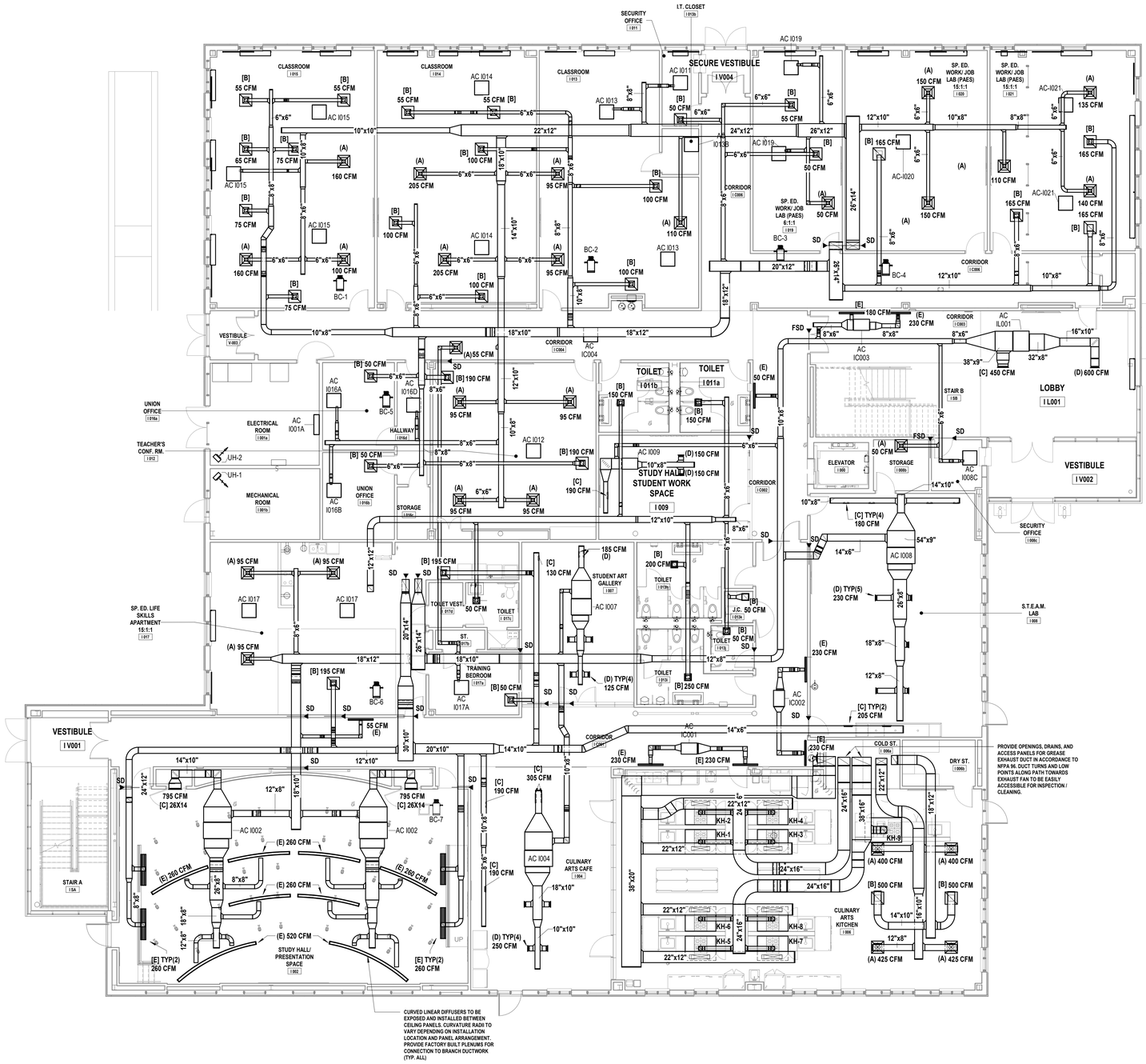

CURVED LINEAR DIFFUSERS TO BE EXPOSED AND INSTALLED BETWEEN CEILING PANELS. CURVATURE RADII TO VARY DEPENDING ON INSTALLATION LOCATION AND PANEL ARRANGEMENT. PROVIDE FACTORY BUILT PLENUMS FOR CONNECTION TO BRANCH DUCTWORK (TYP. ALL)

PROVIDE OPENINGS, DRAINS, AND ACCESS PANELS FOR GREASE EXHAUST DUCT IN ACCORDANCE TO NFPA 96. DUCT TURNS AND LOW POINTS ALONG PATH TOWARDS EXHAUST FAN TO BE EASILY ACCESSIBLE FOR INSPECTION / CLEANING.

1 Ground Floor Ductwork Plan

SCALE: 1/8" = 1'-0"

GENERAL SCOPE OF WORK:

1. PROVIDE REQUIRED VENTILATION AIR TO ALL OCCUPIABLE SPACES THROUGH DOAS AIR SYSTEM. SERVICE FOR GROUND FLOOR: DOAS-1 WILL SUPPLY 2520 CFM OF OUTSIDE AIR. DOAS 2 WILL SUPPLY 2745. BASIS OF DESIGN WILL BE DAIKIN REBEL MODEL DOAS UNITS WITH ENERGY RECOVERY CORE.
2. PROVIDE SPACE AIR CONDITIONING THROUGH VRF SPLIT AIR CONDITIONING UNITS. FINAL DETERMINATION WILL BE BASED UPON AVAILABLE CEILING SPACE, HVAC ZONING REQUIREMENTS AND CEILING CONDITIONS.
3. CULINARY ARTS KITCHEN SPACE WILL INCORPORATE A COMMERICAL KITCHEN DESIGN BY CAPTIVEAIRE.
4. PROVIDE PERIMETER FIN TUBE RADIATION. ANTICIPATE THAT HOT WATER FIN TUBE WILL BE SERVED FROM EXISTING BUILDING A.

GENERAL NOTES:

1. DO NOT SCALE DRAWINGS. LINE WORK SHOWN IS SCHEMATIC. CONTRACTOR SHALL PROVIDE SHOP DRAWINGS BASED ON DESIGN INTENT, SURVEY OF EXISTING CONDITIONS, AND COORDINATION WITH OTHER TRADES.
2. INSTALL ALL EQUIPMENT IN ACCORDANCE WITH MANUFACTURER'S REQUIRED MAINTENANCE CLEARANCES AND PREVAILING CODE.
3. CONTRACTOR TO COORDINATE THE PLACEMENT OF ALL TEMPERATURE SENSORS / THERMOSTATS WITH THE DISTRICT.
4. SEE SPECIFICATION "099123 - INTERIOR PAINTING" FOR INSTRUCTION REGARDING DUCTWORK PAINTING AND FINISH.
5. PROVIDE VOLUME DAMPERS ON ALL BRANCH SUPPLY AND RETURN DUCTWORK FOR BALANCING.

ALTERNATE M-1:

1. CONTRACTOR TO FURNISH AND INSTALL 2'X2' DIFFUSERS AND ASSOCIATED ACCESORIES IN STUDY HALL / PRESENTATION SPACE I 0002 IN LIEU OF CURVED LINEAR DIFFUSERS.

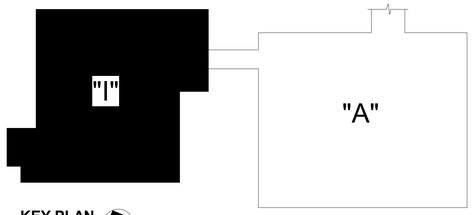

KEY PLAN

SCALE: NTS

H2M architects + engineers
538 Broad Hollow Road, 4th Floor East
Melville, NY 11747
631.756.8000 • www.h2m.com
Land Surveying Certificate of Authorization No.: 0018178
Engineering Certificate of Authorization No.: 0018438

CONSULTANTS:

MARK	DATE	DESCRIPTION
1	10-18-2024	SED ENGINEERING ADDENDUM 1
2	10-30-2024	SED ENGINEERING ADDENDUM 2
3	01-10-2025	SED ENGINEERING ADDENDUM 3

STATE OF NEW YORK • BRIAN CASTELLI • 099167 • LICENSED PROFESSIONAL ENGINEER

DESIGNED BY:	DRAWN BY:	CHECKED BY:	REVIEWED BY:
RVS	RVS	BMC	-
PROJECT No: WPSD2203	DATE: FEBRUARY 2025	SCALE: AS SHOWN	

CLIENT

WHITE PLAINS CITY SCHOOL DISTRICT

HIGH SCHOOL ADDITION

White Plains Public Schools • WP • REAL LIFE LEARNING

66-22-00-01-0-016-030

CONTRACT

CONTRACT M

STATUS

FINAL BID DOCUMENT

SHEET TITLE

HVAC BUILDING GROUND FLOOR HVAC DUCTWORK PLAN

DRAWING No.

M 101.03

C:\Users\bcastelli\Documents\WPSD2203_Central21_M_bcastelli7R8kCQ.rvt

3/21/2025 5:09:21 PM

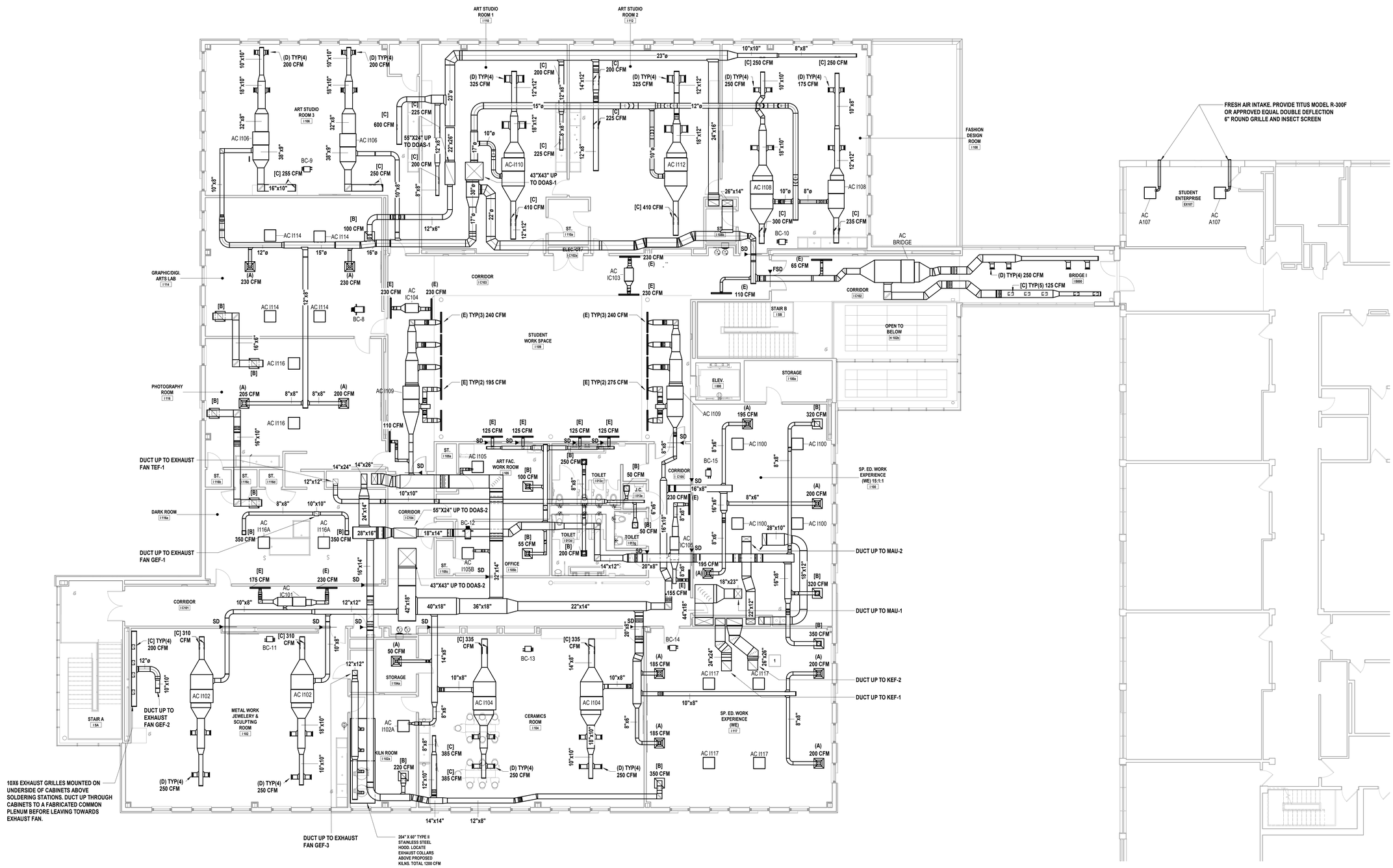

1 First Floor Ductwork Plan

SCALE: 1/8" = 1'-0"

GENERAL NOTES:

1. DO NOT SCALE DRAWINGS. LINE WORK SHOWN IS SCHEMATIC. CONTRACTOR SHALL PROVIDE SHOP DRAWINGS BASED ON DESIGN INTENT, SURVEY OF EXISTING CONDITIONS, AND COORDINATION WITH OTHER TRADES.
2. INSTALL ALL EQUIPMENT IN ACCORDANCE WITH MANUFACTURER'S REQUIRED MAINTENANCE CLEARANCES AND PREVAILING CODE.
3. CONTRACTOR TO COORDINATE THE PLACEMENT OF ALL TEMPERATURE SENSORS / THERMOSTATS WITH THE DISTRICT.
4. SEE SPECIFICATION "099123 - INTERIOR PAINTING" FOR INSTRUCTION REGARDING DUCTWORK PAINTING AND FINISH.
5. PROVIDE VOLUME DAMPERS ON ALL BRANCH SUPPLY AND RETURN DUCTWORK FOR BALANCING.

KEYED NOTES:

1. SEE SPECIFICATION "230719 - DUCTWORK INSULATION" FOR KITCHEN HOOD EXHAUST DUCT FIRE RATED BLANKET REQUIREMENTS. DUCT IS TO MAINTAIN 1 HOUR FIRE RATING UP TO ROOF DECK

GENERAL SCOPE OF WORK:

1. PROVIDE REQUIRED VENTILATION AIR TO ALL OCCUPIABLE SPACES THROUGH DOAS AIR SYSTEM. SERVICE FOR FIRST FLOOR: DOAS-1 WILL SUPPLY 3655 CFM OF OUTSIDE AIR. DOAS 2 WILL SUPPLY 3875 CFM OF OUTSIDE AIR. BASIS OF DESIGN WILL BE DAIKIN REBEL MODEL DOAS UNITS WITH ENERGY RECOVERY CORE FOR DOAS 1 AND 2.
2. PROVIDE SPACE AIR CONDITIONING THROUGH VRF SPLIT AIR CONDITIONING UNITS. FINAL DETERMINATION WILL BE BASED UPON AVAILABLE CEILING SPACE, HVAC ZONING REQUIREMENTS AND CEILING CONDITIONS.
3. PROVIDE PERIMETER FIN TUBE RADIATION. ANTICIPATE THAT HOT WATER FIN TUBE WILL BE SERVED FROM EXISTING BUILDING A.

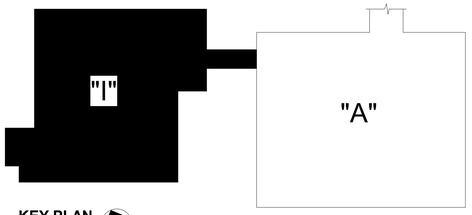

KEY PLAN

SCALE: NTS

H2M architects + engineers

538 Broad Hollow Road, 4th Floor East
Melville, NY 11747
631.756.8000 • www.h2m.com
Land Surveying Certificate of Authorization No.: 0018178
Engineering Certificate of Authorization No.: 0018438

CONSULTANTS:

MARK	DATE	DESCRIPTION
1	10-18-2024	SED ENGINEERING ADDENDUM 1
2	10-30-2024	SED ENGINEERING ADDENDUM 2
3	01-10-2025	SED ENGINEERING ADDENDUM 3
5	02-21-2025	SED ENGINEERING ADDENDUM 5

STATE OF NEW YORK · BRIAN CASTELLI · 099167 · LICENSED PROFESSIONAL ENGINEER

DESIGNED BY:	DRAWN BY:	CHECKED BY:	REVIEWED BY:
RVS	RVS	BMC	-
PROJECT No: WPSD2203	DATE: FEBRUARY 2025	SCALE: AS SHOWN	

CLIENT

WHITE PLAINS CITY SCHOOL DISTRICT

HIGH SCHOOL ADDITION

White Plains Public Schools · REAL LIFE LEARNING

66-22-00-01-0-016-030

CONTRACT: CONTRACT M

STATUS: FINAL BID DOCUMENT

SHEET TITLE: HVAC BUILDING FIRST FLOOR DUCTWORK PLAN

DRAWING No. M 102.03

C:\Users\bcastelli\Documents\WPSD2203_Central21_M_bcastelli1768CQ.rvt

3/21/2025 5:09:25 PM

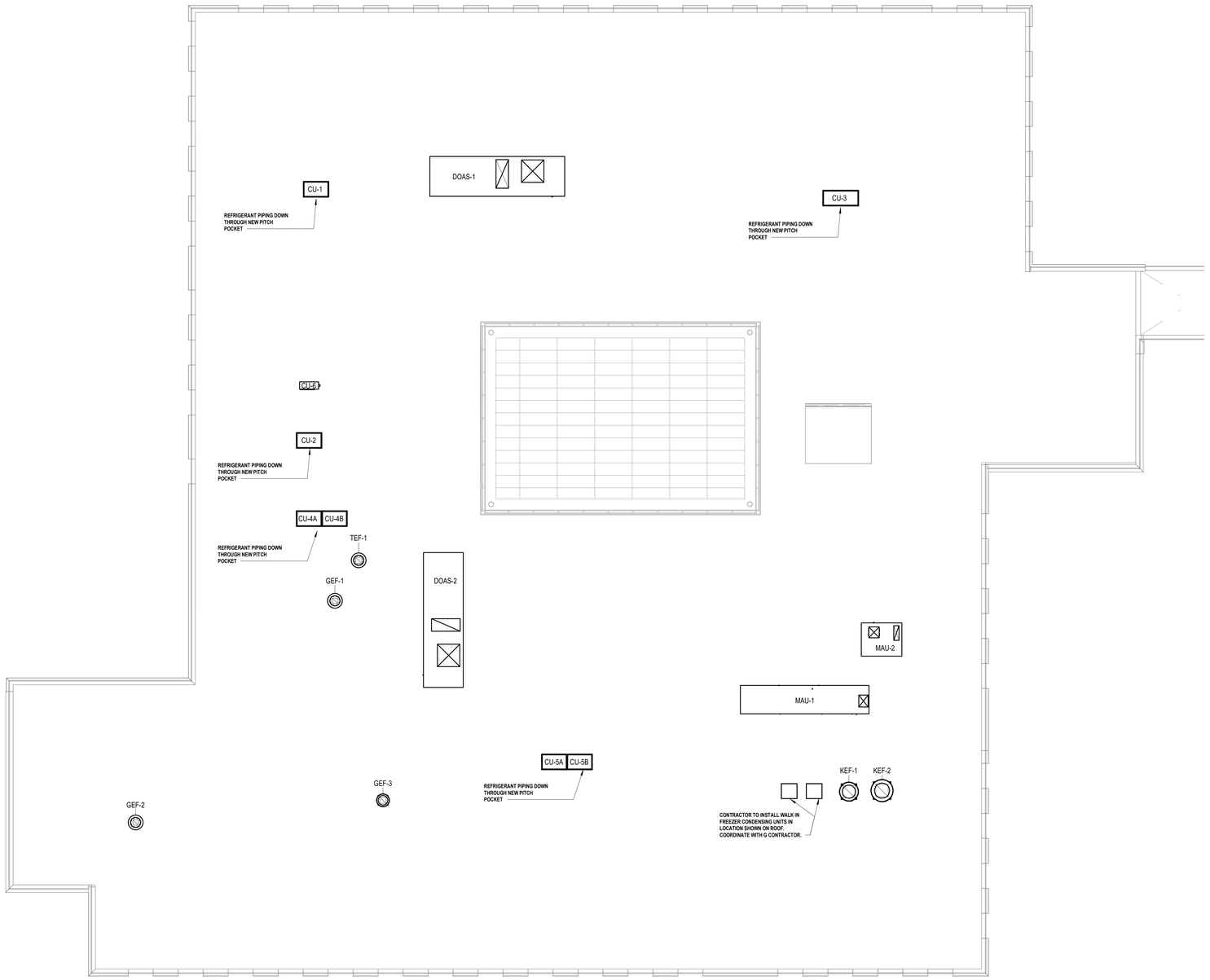

1 **Roof Ductwork Plan**
SCALE: 1/8" = 1'-0"

GENERAL SCOPE OF WORK:

1. PROVIDE REQUIRED VENTILATION AIR TO ALL OCCUPIABLE SPACES THROUGH DOAS AIR SYSTEM. DOAS-1 WILL SUPPLY TOTAL OF 6175 CFM OF OUTSIDE AIR. DOAS 2 WILL SUPPLY TOTAL OF 6620 CFM OF OUTSIDE AIR. BASIS OF DESIGN WILL BE DAIKIN REBEL MODEL DOAS UNITS WITH ENERGY RECOVERY CORE FOR DOAS 1 AND 2.

GENERAL NOTES:

1. DO NOT SCALE DRAWINGS. LINE WORK SHOWN IS SCHEMATIC. CONTRACTOR SHALL PROVIDE SHOP DRAWINGS BASED ON DESIGN INTENT, SURVEY OF EXISTING CONDITIONS, AND COORDINATION WITH OTHER TRADES.
2. INSTALL ALL EQUIPMENT IN ACCORDANCE WITH MANUFACTURER'S REQUIRED MAINTENANCE CLEARANCES AND PREVAILING CODE.
3. INSTALL ALL REFRIGERANT PIPING IN ACCORDANCE WITH MANUFACTURERS SIZING AND RECOMMENDATIONS.

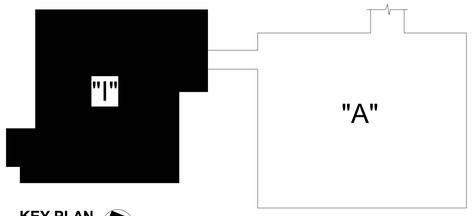

KEY PLAN
SCALE: NTS

H2M architects + engineers
538 Broad Hollow Road, 4th Floor East
Melville, NY 11747
631.756.8000 • www.h2m.com
Land Surveying Certificate of Authorization No.: 0018178
Engineering Certificate of Authorization No.: 0018438

CONSULTANTS:

MARK	DATE	DESCRIPTION

STATE OF NEW YORK · BRIAN CASTELLI · 099167 · LICENSED PROFESSIONAL ENGINEER

DESIGNED BY:	DRAWN BY:	CHECKED BY:	REVIEWED BY:
RVS	RVS	BMC	
PROJECT No:	DATE:	SCALE:	
WPSD2203	FEBRUARY 2025	AS SHOWN	

CLIENT
WHITE PLAINS CITY SCHOOL DISTRICT

HIGH SCHOOL ADDITION

White Plains Public Schools · WP · REAL LIFE LEARNING

66-22-00-01-0-016-030

CONTRACT
CONTRACT M

STATUS
FINAL BID DOCUMENT

SHEET TITLE
HVAC
BUILDING
HVAC ROOF PLAN

DRAWING No.
M 103.00

C:\Users\bcastelli\Documents\WPSD2203_Central21_M_bcastelli7RBCQ.rvt
3/21/2025 5:09:26 PM

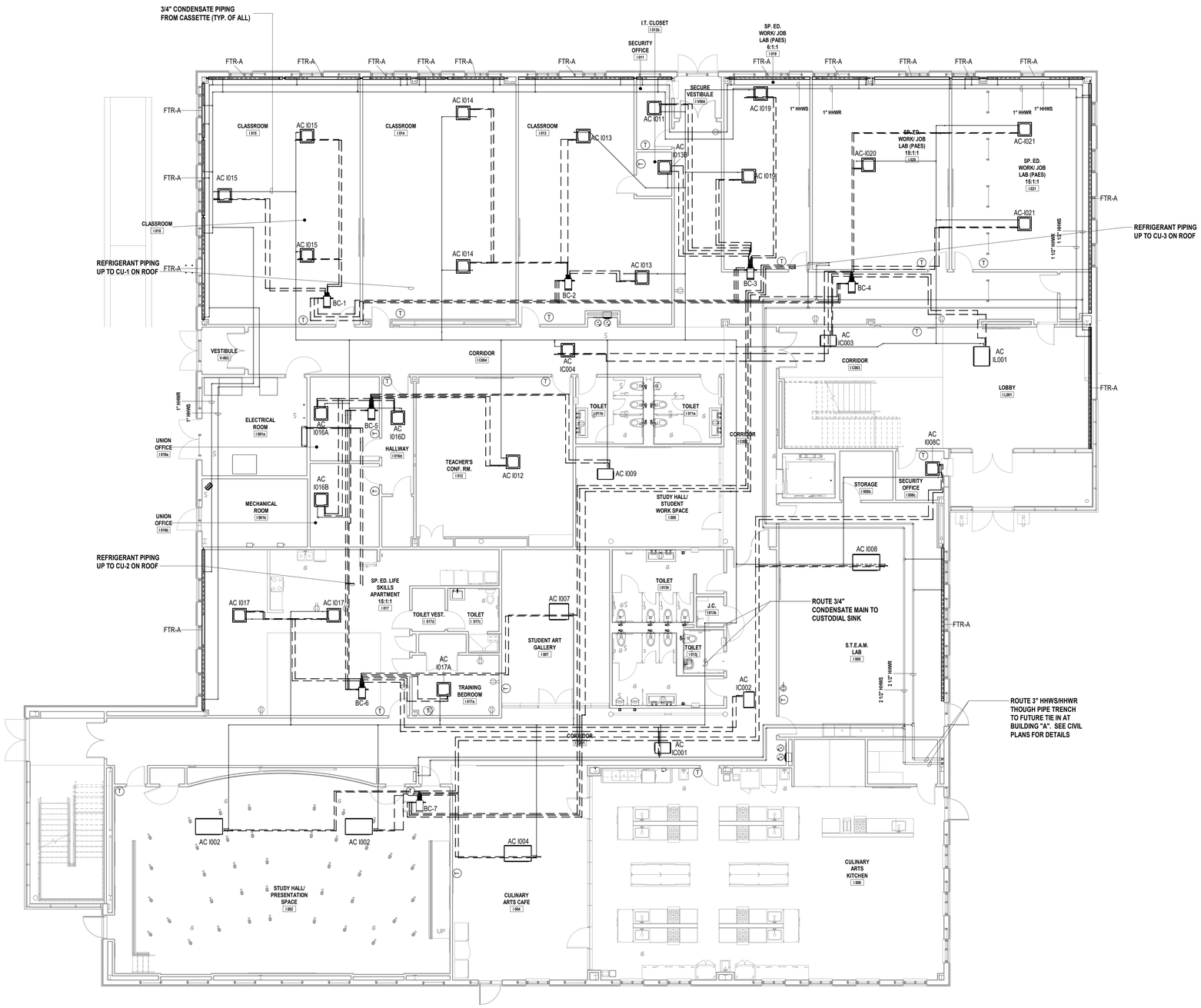

1 Ground Floor HVAC Piping Plan
SCALE: 1/8" = 1'-0"

GENERAL NOTES:

1. DO NOT SCALE DRAWINGS. LINE WORK SHOWN IS SCHEMATIC. CONTRACTOR SHALL PROVIDE SHOP DRAWINGS BASED ON DESIGN INTENT, SURVEY OF EXISTING CONDITIONS, AND COORDINATION WITH OTHER TRADES.
2. INSTALL ALL EQUIPMENT IN ACCORDANCE WITH MANUFACTURER'S REQUIRED MAINTENANCE CLEARANCES AND PREVAILING CODE.
3. PROVIDE AND INSTALL PIPE COVERINGS WHEREVER PIPING IS TO BE PLACED IN A VISIBLE AREA.
4. INSTALL ALL REFRIGERANT PIPING IN ACCORDANCE WITH MANUFACTURERS SIZING AND RECOMMENDATIONS.
5. PROVIDE FINNED TUBE ACTIVE LENGTH EQUAL TO HALF OF OVERALL ENCLOSURE LENGTH AT EACH FINNED AT EACH LOCATION.

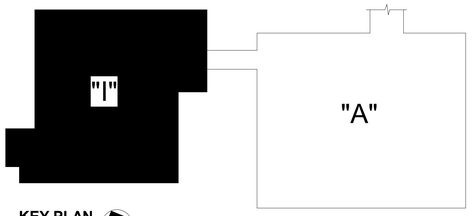

KEY PLAN
SCALE: NTS

H2M architects + engineers
538 Broad Hollow Road, 4th Floor East
Melville, NY 11747
631.756.8000 • www.h2m.com
Land Surveying Certificate of Authorization No.: 0018178
Engineering Certificate of Authorization No.: 0018438

CONSULTANTS:

MARK	DATE	DESCRIPTION
3	01-10-2025	SED ENGINEERING ADDENDUM 3

STATE OF NEW YORK · BRIAN CASTELLI · 099167 · LICENSED PROFESSIONAL ENGINEER

DESIGNED BY:	DRAWN BY:	CHECKED BY:	REVIEWED BY:
RVS	RVS	BMC	
PROJECT No:	DATE:	SCALE:	
WPSD2203	FEBRUARY 2025	AS SHOWN	

CLIENT
WHITE PLAINS CITY SCHOOL DISTRICT

HIGH SCHOOL ADDITION

White Plains Public Schools · WP · REAL LIFE LEARNING

66-22-00-01-0-016-030

CONTRACT
CONTRACT M

STATUS
FINAL BID DOCUMENT

SHEET TITLE
HVAC BUILDING GROUND FLOOR HVAC PIPING PLAN

DRAWING No.
M 201.03

C:\Users\bcastelli\Documents\WPSD2203_Central21_M_bcastelli7RBCQ.rvt
3/21/2025 5:09:32 PM

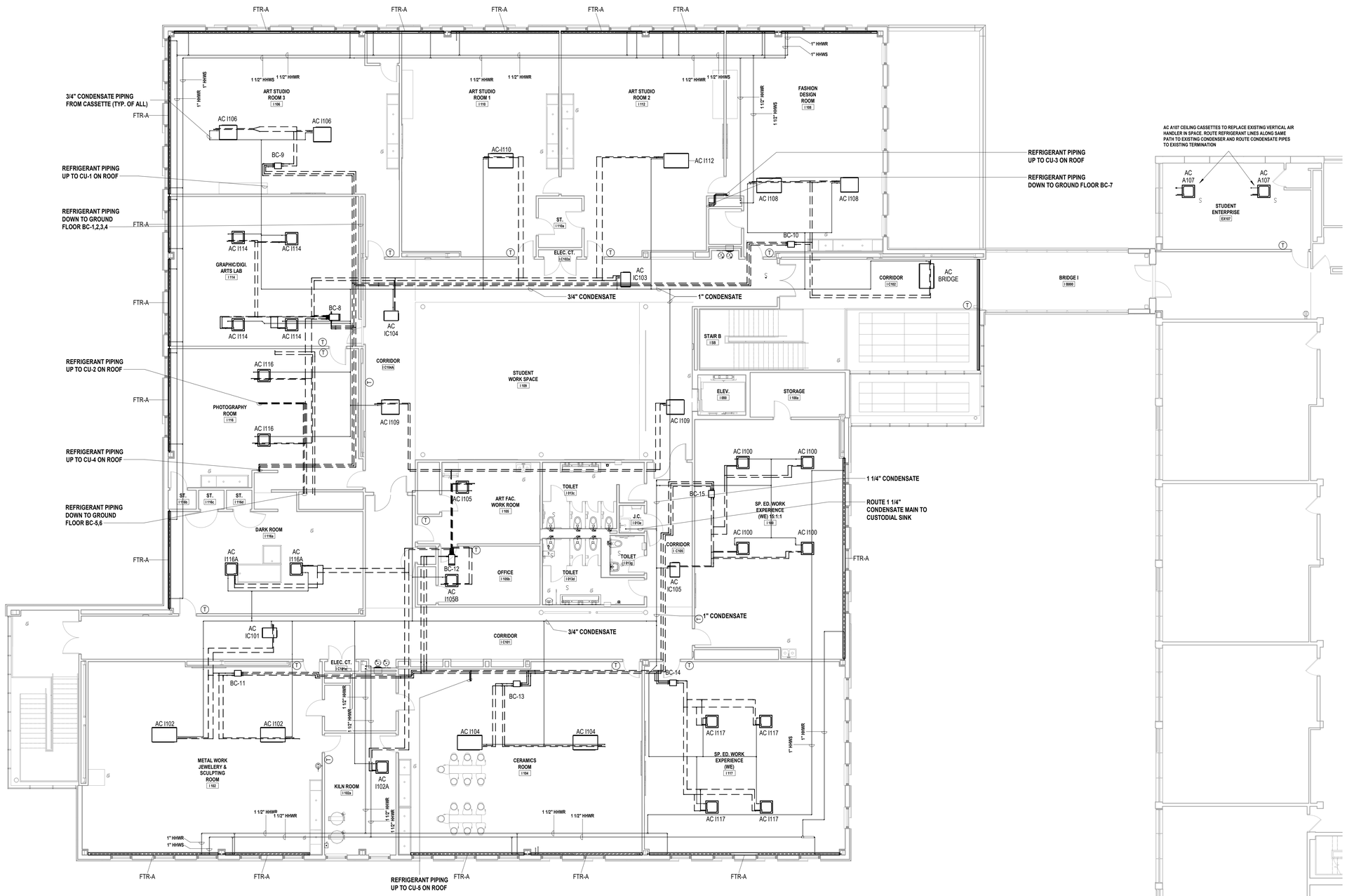

1 First Floor HVAC Piping Plan

SCALE: 1/8" = 1'-0"

GENERAL NOTES:

1. DO NOT SCALE DRAWINGS. LINE WORK SHOWN IS SCHEMATIC. CONTRACTOR SHALL PROVIDE SHOP DRAWINGS BASED ON DESIGN INTENT, SURVEY OF EXISTING CONDITIONS, AND COORDINATION WITH OTHER TRADES.
2. INSTALL ALL EQUIPMENT IN ACCORDANCE WITH MANUFACTURER'S REQUIRED MAINTENANCE CLEARANCES AND PREVAILING CODE.
3. PROVIDE AND INSTALL PIPE COVERINGS WHEREVER PIPING IS TO BE PLACED IN A VISIBLE AREA.
4. INSTALL ALL REFRIGERANT PIPING IN ACCORDANCE WITH MANUFACTURERS SIZING AND RECOMMENDATIONS.
5. PROVIDE FINNED TUBE ACTIVE LENGTH EQUAL TO HALF OF OVERALL ENCLOSURE LENGTH AT EACH FINNED AT EACH LOCATION.

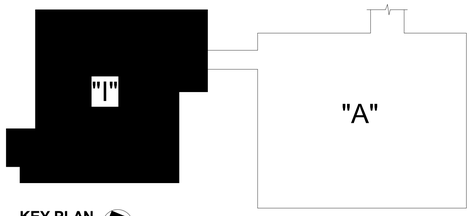

KEY PLAN

SCALE: NTS

H2M architects + engineers

538 Broad Hollow Road, 4th Floor East
Melville, NY 11747
631.756.8000 • www.h2m.com
Land Surveying Certificate of Authorization No.: 0018178
Engineering Certificate of Authorization No.: 0018438

CONSULTANTS:

MARK	DATE	DESCRIPTION
3	01-10-2025	SED ENGINEERING ADDENDUM 3

STATE OF NEW YORK · BRIAN CASTELLI · 099167 · LICENSED PROFESSIONAL ENGINEER

DESIGNED BY:	DRAWN BY:	CHECKED BY:	REVIEWED BY:
RVS	RVS	BMC	-
PROJECT No: WPSD2203	DATE: FEBRUARY 2025	SCALE: AS SHOWN	

CLIENT

WHITE PLAINS CITY SCHOOL DISTRICT

HIGH SCHOOL ADDITION

White Plains Public Schools · WP · REAL LIFE LEARNING

66-22-00-01-0-016-030

CONTRACT

CONTRACT M

STATUS

FINAL BID DOCUMENT

SHEET TITLE

HVAC BUILDING FIRST FLOOR HVAC PIPING PLAN

DRAWING No.

M 202.03

C:\Users\bcastelli\DDrawings\WPSD2203_Contract1_M_bcastelli.R18CD.rvt

3/21/2025 5:09:39 PM

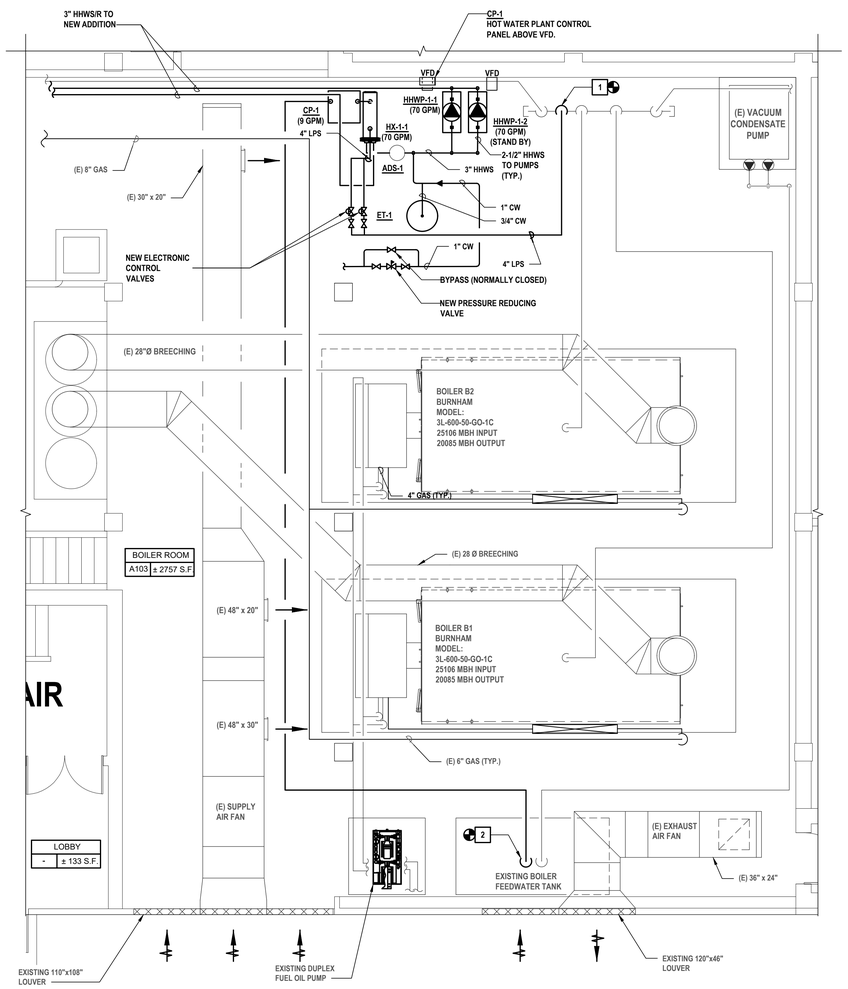

1 **Boiler Room Plan**
SCALE: 1/4" = 1'- 0"

KEYED NOTES:

1. REMOVE SECTION OF (E) STEAM HEADER AND PREPARE FOR RECONNECTION.
2. 1" CONDENSATE RETURN TO BE TIED INTO EXISTING CONDENSATE RETURN PIPING TO (E) BOILER FEED TANK.

H2M architects + engineers
2 Executive Blvd., Suite 401
Suffern, NY 10901
845.357.7238 • www.h2m.com

CONSULTANTS:

MARK	DATE	DESCRIPTION

STATE OF NEW YORK · BRIAN CASTELLI · 099167 · LICENSED PROFESSIONAL ENGINEER

"ALTERATION OF THIS DOCUMENT EXCEPT BY A LICENSED PROFESSIONAL IS ILLEGAL"

DESIGNED BY:	DRAWN BY:	CHECKED BY:	REVIEWED BY:
SFP	KMG		

PROJECT No.:	DATE:	SCALE:
WPSD2203	NOVEMBER 2024	AS SHOWN

CLIENT
White Plains City School District

WHITE PLAINS HIGH SCHOOL ADDITION

White Plains Public Schools · WP · REAL LIFE LEARNING

550 North Street
White Plains, NY 10605

SED Number:

CONTRACT
CONTRACT G
GENERAL CONSTRUCTION

STATUS
FINAL BID DOCUMENT

SHEET TITLE
BUILDING "A" BOILER ROOM PLAN ALTERNATE M-2

DRAWING No.
M204.00

VRV INDOOR UNIT SCHEDULE

TAG	ROOM	MODEL	NOMINAL TONNAGE	CONNECTED TO:		SUPPLY FAN	COOLING CAPACITY				HEATING CAPACITY		ELECTRICAL			WEIGHT (LBS)	MFG.	NOTES
				CONDENSING UNIT	ZONE CHANGEOVER DEVICE	AIRFLOW RATE (CFM)	TOTAL BTU/H	SENSIBLE BTU/H	ENTERING AIR °F DB	ENTERING AIR °F WB	TOTAL BTU/H	ENTERING AIR °F DB	POWER V / Ø	MIN CIRCUIT AMPS	MAX OVERCURRENT PROTECTION			
AC I015 (1)	I015	FXZQ18TBVJU	1.5	CU 1	YES	511	17048	10680	75.0	65.5	20814	68.0	208 / 1	0.6	15.0	41.9	DAIKIN	
AC I015 (2)	I015	FXZQ18TBVJU	1.5	CU 1	YES	511	17048	10680	75.0	65.5	20814	68.0	208 / 1	0.6	15.0	41.9	DAIKIN	
AC I015 (3)	I015	FXZQ18TBVJU	1.5	CU 1	YES	511	17048	10680	75.0	65.5	20814	68.0	208 / 1	0.6	15.0	41.9	DAIKIN	
AC I014 (1)	I014	FXZQ18TBVJU	1.5	CU 1	YES	511	17048	10680	75.0	65.5	20814	68.0	208 / 1	0.6	15.0	41.9	DAIKIN	
AC I014 (2)	I014	FXZQ18TBVJU	1.5	CU 1	YES	511	17048	10680	75.0	65.5	20814	68.0	208 / 1	0.6	15.0	41.9	DAIKIN	
AC I013 (1)	I013	FXZQ18TBVJU	1.5	CU 1	YES	511	17048	10680	75.0	65.5	20814	68.0	208 / 1	0.6	15.0	41.9	DAIKIN	
AC I013 (2)	I013	FXZQ18TBVJU	1.5	CU 1	YES	511	17048	10680	75.0	65.5	20814	68.0	208 / 1	0.6	15.0	41.9	DAIKIN	
AC I013B	I013B	FXZQ05TBVJU	0.5	CU 1	YES	300	5455	3835	75.0	65.5	6824	68.0	208 / 1	0.3	15.0	35.3	DAIKIN	
AC I011	I011	FXZQ05TBVJU	0.5	CU 1	YES	300	5455	3835	75.0	65.5	6824	68.0	208 / 1	0.3	15.0	35.3	DAIKIN	
AC I019 (1)	I019	FXZQ05TBVJU	0.5	CU 1	YES	300	5455	3835	75.0	65.5	6824	68.0	208 / 1	0.3	15.0	35.3	DAIKIN	
AC I019 (2)	I019	FXZQ05TBVJU	0.5	CU 1	YES	300	5455	3835	75.0	65.5	6824	68.0	208 / 1	0.3	15.0	35.3	DAIKIN	
AC I020	I020	FXZQ18TBVJU	1.5	CU 1	YES	511	17048	10680	75.0	65.5	20814	68.0	208 / 1	0.6	15.0	41.9	DAIKIN	
AC I021 (1)	I021	FXZQ18TBVJU	1.5	CU 1	YES	511	17048	10680	75.0	65.5	20814	68.0	208 / 1	0.6	15.0	41.9	DAIKIN	
AC I021 (2)	I021	FXZQ18TBVJU	1.5	CU 1	YES	511	17048	10680	75.0	65.5	20814	68.0	208 / 1	0.6	15.0	41.9	DAIKIN	
AC IL001	IL001	FXSQ18TBVJU	1.5	CU 1	YES	600	18000	13600	75.0	65.5	20000	68.0	208 / 1	1.6	15.0	77.0	DAIKIN	
AC IC001	IC001	FXSQ05TBVJU	0.5	CU 2	YES	230	5800	4700	75.0	65.5	6500	68.0	208 / 1	0.8	15.0	55.0	DAIKIN	
AC IC002	IC002	FXSQ05TBVJU	0.5	CU 3	YES	230	5800	4700	75.0	65.5	6500	68.0	208 / 1	0.8	15.0	55.0	DAIKIN	
AC I016A	I015A	FXZQ05TBVJU	0.5	CU 2	YES	300	5455	3835	75.0	65.5	6824	68.0	208 / 1	0.3	15.0	35.3	DAIKIN	
AC I016B	I015B	FXZQ05TBVJU	0.5	CU 2	YES	300	5455	3835	75.0	65.5	6824	68.0	208 / 1	0.3	15.0	35.3	DAIKIN	
AC I016D	I016D	FXZQ05TBVJU	0.5	CU 2	YES	300	5455	3835	75.0	65.5	6824	68.0	208 / 1	0.3	15.0	35.3	DAIKIN	
AC I012	I012	FXZQ18TBVJU	1.5	CU 2	YES	511	17048	10680	75.0	65.5	20814	68.0	208 / 1	0.6	15.0	41.9	DAIKIN	
AC I009	I009	FXSQ09TBVJU	0.8	CU 2	YES	318	9500	7000	75.0	65.5	10500	68.0	208 / 1	0.8	15.0	55.0	DAIKIN	
AC I017 (1)	I017	FXZQ15TBVJU	1.3	CU 2	YES	405	14323	8867	75.0	65.5	17743	68.0	208 / 1	0.4	15.0	36.4	DAIKIN	
AC I017 (2)	I017	FXZQ15TBVJU	1.3	CU 2	YES	405	14323	8867	75.0	65.5	17743	68.0	208 / 1	0.4	15.0	36.4	DAIKIN	
AC I017A	I017A	FXZQ05TBVJU	0.5	CU 2	YES	300	5455	3835	75.0	65.5	6824	68.0	208 / 1	0.3	15.0	35.3	DAIKIN	
AC I007	I007	FXSQ18TBVJU	1.5	CU 2	YES	600	18000	13600	75.0	65.5	20000	68.0	208 / 1	1.6	15.0	77.0	DAIKIN	
AC IC003	IC003	FXSQ05TBVJU	0.5	CU 1	YES	230	5800	4700	75.0	65.5	6500	68.0	208 / 1	0.8	15.0	55.0	DAIKIN	
AC IC004	IC004	FXZQ05TBVJU	0.5	CU 1	YES	300	5455	3835	75.0	65.5	6824	68.0	208 / 1	0.3	15.0	35.3	DAIKIN	
AC I002 (1)	I002	FXSQ48TBVJU	4.0	CU 3	YES	1307	46023	28468	75.0	65.5	56079	68.0	208 / 1	2.8	15.0	104.0	DAIKIN	
AC I002 (2)	I002	FXSQ48TBVJU	4.0	CU 3	YES	1307	46023	28468	75.0	65.5	56079	68.0	208 / 1	2.8	15.0	104.0	DAIKIN	
AC I004	I004	FXSQ36TBVJU	3.0	CU 3	YES	1130	34461	22600	75.0	65.5	41441	68.0	208 / 1	2.5	15.0	101.0	DAIKIN	
AC I008	I008	FXSQ48TBVJU	4.0	CU 3	YES	1307	46023	28468	75.0	65.5	56079	68.0	208 / 1	2.8	15.0	104.0	DAIKIN	
AC I008C	I008C	FXZQ05TBVJU	0.5	CU 3	YES	300	5455	3835	75.0	65.5	6824	68.0	208 / 1	0.3	15.0	35.3	DAIKIN	
AC I116 (1)	I116	FXZQ18TBVJU	1.5	CU 4	YES	511	17048	10680	75.0	65.5	20814	68.0	208 / 1	0.6	15.0	41.9	DAIKIN	
AC I116 (2)	I116	FXZQ18TBVJU	1.5	CU 4	YES	511	17048	10680	75.0	65.5	20814	68.0	208 / 1	0.6	15.0	41.9	DAIKIN	
AC I114 (1)	I114	FXZQ12TBVJU	1.0	CU 4	YES	353	11425	6100	75.0	65.5	13990	68.0	208 / 1	0.4	15.0	36.4	DAIKIN	
AC I114 (2)	I114	FXZQ12TBVJU	1.0	CU 4	YES	353	11425	6100	75.0	65.5	13990	68.0	208 / 1	0.4	15.0	36.4	DAIKIN	
AC I114 (3)	I114	FXZQ12TBVJU	1.0	CU 4	YES	353	11425	6100	75.0	65.5	13990	68.0	208 / 1	0.4	15.0	36.4	DAIKIN	
AC I114 (4)	I114	FXZQ12TBVJU	1.0	CU 4	YES	353	11425	6100	75.0	65.5	13990	68.0	208 / 1	0.4	15.0	36.4	DAIKIN	
AC I110	I110	FXSQ48TBVJU	4.0	CU 4	YES	1307	46023	28468	75.0	65.5	56079	68.0	208 / 1	2.8	15.0	104.0	DAIKIN	
AC I112	I112	FXSQ48TBVJU	4.0	CU 4	YES	1307	46023	28468	75.0	65.5	56079	68.0	208 / 1	2.8	15.0	104.0	DAIKIN	
AC IC101	IC101	FXSQ07TBVJU	0.6	CU 5	YES	281	7200	5800	75.0	65.5	8500	68.0	208 / 1	0.8	15.0	55.0	DAIKIN	
AC IC103	IC103	FXSQ07TBVJU	0.6	CU 4	YES	281	7200	5800	75.0	65.5	8500	68.0	208 / 1	0.8	15.0	55.0	DAIKIN	
AC IC104	IC104	FXSQ09TBVJU	0.8	CU 4	YES	318	9500	7000	75.0	65.5	10500	68.0	208 / 1	0.8	15.0	55.0	DAIKIN	
AC IC105	IC105	FXSQ07TBVJU	0.6	CU 5	YES	281	7200	5800	75.0	65.5	8500	68.0	208 / 1	0.8	15.0	55.0	DAIKIN	
AC I106 (1)	I106	FXSQ24TBVJU	2.0	CU 4	YES	742	24000	17100	75.0	65.5	27000	68.0	208 / 1	1.8	15.0	77.0	DAIKIN	
AC I106 (2)	I106	FXSQ24TBVJU	2.0	CU 4	YES	742	24000	17100	75.0	65.5	27000	68.0	208 / 1	1.8	15.0	77.0	DAIKIN	
AC I108 (1)	I108	FXSQ36TBVJU	3.0	CU 4	YES	1130	34461	22600	75.0	65.5	41441	68.0	208 / 1	2.5	15.0	101.0	DAIKIN	
AC I108 (2)	I108	FXSQ24TBVJU	2.0	CU 4	YES	742	24000	17100	75.0	65.5	27000	68.0	208 / 1	1.8	15.0	77.0	DAIKIN	
AC I102 (1)	I102	FXSQ36TBVJU	3.0	CU 5	YES	1130	34461	22600	75.0	65.5	41441	68.0	208 / 1	2.5	15.0	101.0	DAIKIN	
AC I102 (2)	I102	FXSQ36TBVJU	3.0	CU 5	YES	1130	34461	22600	75.0	65.5	41441	68.0	208 / 1	2.5	15.0	101.0	DAIKIN	
AC I102A	I102A	FXZQ18TBVJU	1.5	CU 5	YES	511	17048	10680	75.0	65.5	20814	68.0	208 / 1	0.6	15.0	41.9	DAIKIN	
AC I105	I105	FXZQ09TBVJU	0.8	CU 5	YES	317	9036	5466	75.0	65.5	10919	68.0	208 / 1	0.3	15.0	35.3	DAIKIN	
AC I105B	I105B	FXZQ05TBVJU	0.5	CU 5	YES	300	5455	3835	75.0	65.5	6824	68.0	208 / 1	0.3	15.0	35.3	DAIKIN	
AC I109 (1)	I109	FXSQ24TBVJU	2.0	CU 5	YES	742	24000	17100	75.0	65.5	27000	68.0	208 / 1	1.8	15.0	77.0	DAIKIN	
AC I109 (2)	I109	FXFQ24TBVJU	2.0	CU 5	YES	742	24000	17100	75.0	65.5	27000	68.0	208 / 1	1.8	15.0	77.0	DAIKIN	
AC I104 (1)	I104	FXSQ36TBVJU	3.0	CU 5	YES	1130	34461	22600	75.0	65.5	41441	68.0	208 / 1	2.5	15.0	101.0	DAIKIN	
AC I104 (2)	I104	FXSQ36TBVJU	3.0	CU 5	YES	1130	34461	22600	75.0	65.5	41441	68.0	208 / 1	2.5	15.0	101.0	DAIKIN	
AC I117 (1)	I117	FXZQ18TBVJU	1.5	CU 5	YES	511	17048	10680	75.0	65.5	20814	68.0	208 / 1	0.6	15.0	41.9	DAIKIN	
AC I117 (2)	I117	FXZQ18TBVJU	1.5	CU 5	YES	511	17048	10680	75.0	65.5	20814	68.0	208 / 1	0.6	15.0	41.9	DAIKIN	
AC I117 (3)	I117	FXZQ18TBVJU	1.5	CU 5	YES	511	17048	10680	75.0	65.5	20814	68.0	208 / 1	0.6	15.0	41.9	DAIKIN	
AC I117 (4)	I117	FXZQ18TBVJU	1.5	CU 5	YES	511	17048	10680	75.0	65.5	20814	68.0	208 / 1	0.6	15.0	41.9	DAIKIN	
AC I100 (1)	I100	FXZQ18TBVJU	1.5	CU 5	YES	511	17048	10680	75.0	65.5	20814	68.0	208 / 1	0.6	15.0	41.9	DAIKIN	
AC I100 (2)	I100	FXZQ18TBVJU	1.5	CU 5	YES	511	17048	10680	75.0	65.5	20814	68.0	208 / 1	0.6	15.0	41.9	DAIKIN	
AC I100 (3)	I100	FXZQ18TBVJU	1.5	CU 5	YES	511	17048	10680	75.0	65.5	20814	68.0	208 / 1	0.6	15.0	41.9	DAIKIN	
AC I100 (4)	I100	FXZQ18TBVJU	1.5	CU 5	YES	511	17048	10680	75.0	65.5	20814	68.0	208 / 1	0.6	15.0	41.9	DAIKIN	
AC I116A (1)	I116A	FXZQ07TBVJU	0.6	CU 5	YES	307	7161	4627	75.0	65.5	8872	68.0	208 / 1	0.3	15.0	35.3	DAIKIN	
AC I116A (2)	I116A	FXZQ07TBVJU	0.6	CU 5	YES	307	7161	4627	75.0	65.5	8872	68.0	208 / 1	0.3	15.0	35.3	DAIKIN	
AC BRIDGE	BRIDGE	FXSQ48TBVJU	4.0	CU 4	YES	1307	46023	28468	75.0	65.5	56079	68.0	208 / 1	2.8	15.0	104.0	DAIKIN	
AC A107 (1)	A107	FXZQ12TBVJU	1.0	CU --	YES	353	11425	6100	75.0	65.5	13990	68.0	208 / 1	0.4	15.0	36.4	DAIKIN	
AC A107 (2)	A107	FXZQ12TBVJU	1.0	CU --	YES	353	11425	6100	75.0	65.5	13990	68.0	208 / 1	0.4	15.0	36.4	DAIKIN	

NOTES:
1. PROVIDE NON-FUSED DISCONNECT SWITCH
2. FURNSIH AND INSTALL CONDENSATE LIFT MECHANISM AS PART OF A COMPLETE INDOOR UNIT SELECTION
3. PROVIDE WIRED REMOTE TEMPERATURE AND HUMIDITY SENSOR / CONTROLLER FOR EACH SERVED SPACE

VENTILATION INDEX BASED ON 2020 MECHANICAL CODE OF NEW YORK STATE SECTION 403.3.1.1

ROOM #	ROOM NAME	OCCUPANCY CLASSIFICATION	FLOOR AREA (SF) Az	SUPPLY AIR (CFM)	OCCUPANCY LOAD (PERSONS/1000 SF)	NUMBER OF OCCUPANTS Pz	OCCUPANT BASED OA RATE (CFM/OCCUPANT) Rp	AREA BASED OA RATE (CFM/SF) Ra	NON-ADJUSTED TOTAL OA REQUIRED (CFM)	EZ	ADJUSTED TOTAL OA (CFM)	CORRECTED OA BASED ON A COMMON VENTILATION SYSTEM (CFM)	REMARKS
I015	CLASSROOM	EDUCATION:...	1136	1300	35	40	10	.12	537	.8	671	476	
I014	CLASSROOM	EDUCATION: CLASSROOMS (AGES...	1074	1100	35	38	10	.12	509	.8	636	403	
I011	SECURITY OFFICE	OFFICES: OFFICE SPACES	74	75	5	1	5	.06	10	.8	13	27	
I013	CLASSROOM	EDUCATION:...	1000	1000	35	35	10	.12	470	.8	588	366	
IC004	CORRIDOR	EDUCATION:...	645	150	0	0	0	.06	39	.8	49	55	
IC006	CORRIDOR	EDUCATION:...	721	100	0	0	0	0.06	44	.8	55	37	
I016A	UNION OFFICE	OFFICES:...	167	75	5	1	5	.06	16	.8	20	27	
I016B	UNION OFFICE	OFFICES:...	166	75	5	1	5	.06	15	.8	19	27	
I019	SP. ED. WORK / JOB LA...	EDUCATION:...	489	500	35	18	10	.12	239	.8	299	183	
I020	SP. ED. WORK / JOB LA...	EDUCATION:...	781	800	35	28	10	.12	374	.8	468	293	
I021	SP. ED. WORK / JOB LA...	EDUCATION:...	802	1050	35	29	10	.12	387	.8	484	385	
I016D	HALLWAY	EDUCATION:...	106	50	0	0	0	.06	7	.8	9	18	
I012	TEACHER CONFERENCE	OFFICES: CONFERENC...	735	750	50	37	5	.06	230	.8	288	275	
I009	STUDENT WORK SPACE	EDUCATION:...	426	300	35	15	10	.12	202	.8	253	110	
IC002	CORRIDOR	EDUCATION:...	324	100	0	0	0	.06	20	.8	25	37	
IC003	CORRIDOR	EDUCATION:...	244	50	0	0	0	.06	15	.8	19	18	
IL001	LOBBY	OFFICES:...	545	400	10	6	5	.06	63	.8	79	147	
I017	SPECIAL ED. LIFE SKILL...	HOTELS:...	1082	750	10	11	5	.06	120	.8	150	275	
I017A	TRAINING BEDROOM	HOTELS: BEDROOM/LIVING ROOM	150	50	10	2	5	.06	19	.8	24	18	
I007	STUDENT ART GALLERY	PUBLIC SPACES: MUSEUMS/GALLERIES	492	350	40	20	7.5	.06	180	.8	225	128	
I008	S.T.E.A.M. LAB	EDUCATION: SCIENCE...	1112	1150	25	28	10	0.18	481	.8	601	421	
I008B	STORAGE	RETAIL STORES:...	75	50	0	0	0	.12	9	.8	11	18	
I008C	SECURITY OFFICE	OFFICES:...	68	50	5	1	5	.06	10	.8	13	18	
IC001	CORRIDOR	EDUCATION:...	1226	150	0	0	0	.06	74	.8	93	55	
I002	PRESENTATION SPACE	EDUCATION:...	1860	2750	100	186	7.5	.06	1507	.8	1884	1008	
I004	CULINARY ARTS CAFE	FOOD SERVICE:...	850	1050	70	60	7.5	.18	603	.8	754	385	
I106	ART STUDIO RM 3	EDUCATION:...	1341	1600	20	27	10	.18	512	.8	640	586	
I110	ART STUDIO RM 1	EDUCATION:...	1172	1300	20	24	10	.18	451	.8	472	476	
I112	ART STUDIO RM 2	EDUCATION:...	1176	1300	20	24	10	.18	452	.8	565	476	
I108	FASHION DESIGN RM	EDUCATION:...	1175	1700	35	42	10	.12	561	.8	701	623	
I114	GRAPHIC/DIGITAL ART...	EDUCATION:...	994	1250	25	25	10	.12	370	.8	463	458	
IC103	CORRIDOR	EDUCATION:...	581	300	0	0	0	.06	35	.8	44	110	
IC102	CORRIDOR	EDUCATION:...	343	175	0	0	0	.06	21	.8	26	64	
I116	PHOTOGRAPHY RM	EDUCATION:...	929	1100	35	33	10	.12	442	.8	553	403	
IC104	CORRIDOR	EDUCATION:...	193	295	0	0	0	.06	12	.8	15	108	
I109	STUDENT WORK SPACE	EDUCATION:...	1221	1350	100	123	7.5	.06	997	.8	1246	495	
I105	ART FAC. WORK RM	EDUCATION:...	299	250	20	6	10	.18	114	.8	143	92	
I105B	OFFICE	OFFICES:...	206	150	5	2	5	.06	23	.8	29	55	
IC105	CORRIDOR	EDUCATION: CORRIDORS	229	195	0	0	0	.06	14	.8	18	71	
I100	SP. ED. WORK...	EDUCATION:...	1212	1600	35	43	10	.12	576	.8	720	586	
IC101	CORRIDOR	EDUCATION:...	1003	150	0	0	0	.06	61	.8	76	55	
I102	METAL WORK JEWELE...	EDUCATION:...	1567	2050	20	32	10	.18	603	.8	754	751	
I102A	KILN RM	EDUCATION:...	303	450	35	11	10	.12	147	.8	184	165	
I104A	STORAGE	RETAIL STORES:...	86	75	0	0	0	.12	11	.8	14	27	
I104	CERAMICS RM	EDUCATION:...	1603	1800	20	33	10	.18	619	.8	774	660	
IB000	BRIDGE I	EDUCATION:...	333	1000	0	0	0	.06	20	.8	25	366	
I117	SP. ED. WORK...	EDUCATION:...	1339	2100	35	47	10	.12	631	.8	789	770	
A107	STUDENT ENTERPRISE	EDUCATION:...	397	600	35	14	10	.12	188	.8	235	250	

NOTES:
1. VENTILATION RATE CALCULATED IN ACCORDANCE WITH SECTION 403.3.1.1.2 OF THE 2020 MECHANICAL CODE OF NYS. A COMMON VENTILATION SYSTEM SERVES SPACES WITH DIFFERENT VENTILATION REQUIREMENTS.
2. A DIVERSITY FACTOR OF .78 WAS USED TO DETERMINE THE REQUIRED OA RATE.

   D = Ps / (Σ Pz) = 800 / 1029

   WHERE: D = OCCUPANT DIVERSITY
   Ps = PEAK SYSTEM POPULATION
   Σ Pz = SUM OF DESIGN ZONE POPULATION

H2M architects + engineers
538 Broad Hollow Road, 4th Floor East
Melville, NY 11747
631.756.8000 • www.h2m.com
Land Surveying Certificate of Authorization No.: 0018178
Engineering Certificate of Authorization No.: 0018438

CONSULTANTS:

MARK	DATE	DESCRIPTION
1	10-18-2024	SED ENGINEERING ADDENDUM 1
3	01-10-2025	SED ENGINEERING ADDENDUM 3

STATE OF NEW YORK — BRIAN CASTELLI — 099167 — LICENSED PROFESSIONAL ENGINEER

DESIGNED BY:	DRAWN BY:	CHECKED BY:	REVIEWED BY:
RVS	RVS	BMC	

PROJECT No:	DATE:	SCALE:
WPSD2203	FEBRUARY 2025	AS SHOWN

CLIENT
WHITE PLAINS CITY SCHOOL DISTRICT

HIGH SCHOOL ADDITION

66-22-00-01-0-016-030

CONTRACT
CONTRACT M

STATUS
FINAL BID DOCUMENT

SHEET TITLE
HVAC BUILDING SCHEDULES

DRAWING No.
M 300.00

C:\Users\bcastelli\Documents\WPSD2203_Central21_M_bcastelli7RBCQ.rvt
3/21/2025 5:09:40 PM

POWERED EXHAUST FANS

TAG	LOCATION	SERVICE	MODEL	PERFORMANCE			ELECTRICAL					INLET DBA	WEIGHT (LBS)	MFG.	NOTES
				AIRFLOW (CFM)	EXT SP (IN. W.C.)	FAN RPM	BHP	MOTOR HP	POWER V / Ø	MIN CIRCUIT AMPS	MAX OVERCURRENT PROTECTION				
TEF-1	ROOF	TOILET EXHUAST	G-120-VG	1500	1	1665	0.45	1/2	115 / 1	8.2	15.0	66	48	GREENHECK	
TEF-2	I010	TOILET EXHAUST	CSP-A125	100	0.25	969	0.03	52 (W)	115 / 1	0.2	15.0	20	17	GREENHECK	SOLID STATE SPEED CONTROL DIAL, ENERGY STAR CERTIFIED
GEF-1	ROOF	DARK ROOM EXHAUST	G-095-VG	700	0.5	1623	0.14	1/4	115 / 1	4.8	15.0	58	29	GREENHECK	
GEF-2	ROOF	METAL SHOP EXHAUST	G-095-VG	800	0.5	1725	0.16	1/4	115 / 1	4.8	15.0	60	29	GREENHECK	
GEF-3	ROOF	KILN EXHAUST	CUE-120-VG	1200	0.75	1436	0.25	1/2	115 / 1	8.0	15.0	64	51	GREENHECK	AIRSTREAM TEMPERATURE 130°F
KEF-1	ROOF	-	-	-	-	-	-	-	-	-	-	-	-	CAPTIVEAIRE	SEE KITCHEN EQUIPMENT DETAILS FOR FAN SCHEDULE
KEF-2	ROOF	-	-	-	-	-	-	-	-	-	-	-	-	CAPTIVEAIRE	SEE KITCHEN EQUIPMENT DETAILS FOR FAN SCHEDULE

NOTES:
1. ECM / PSC MOTOR SPEED CONTROLLER TO BE INTEGRAL / MOTOR MOUNTED
2. FACTORY PROVIDED DISCONNECT SWITCH
3. 14" GPI ROOF CURB WITH DAMPER TRAY
4. BACKDFRAFT DAMPER
4. HINGED CURB CAP
5. GALVANIZED BIRDSCREEN

CONDENSING UNITS

MARK	NOMINAL TONS	Nominal Cooling Capacity	Nominal Heating Capacity	Refrigerant Used	MNF.	Model	Voltage	Phase	Minimum Circuit Amps	Maximum Overcurrent Protection	REMARKS
CU-1	12	144000 Btu/h	162000 Btu/h	R410A	Daikin	REYQ144AAYDA	480 V	3	21 A	25 A	
CU-2	8	96000 Btu/h	108000 Btu/h	R410A	Daikin	REYQ96AAYDA	460 V	3	16 A	20 A	
CU-3	18	216000 Btu/h	243000 Btu/h	R410A	Daikin	REYQ216AAYDA	480 V	3	30 A	35 A	
CU-4A	12	144000 Btu/h	162000 Btu/h	R410A	Daikin	REYQ144AAYDA	480 V	3	21 A	25 A	
CU-4B	10	120000 Btu/h	135000 Btu/h	R410A	Daikin	REYQ120AAYDA	480 V	3	17 A	20 A	
CU-5A	12	144000 Btu/h	162000 Btu/h	R410A	Daikin	REYQ144AAYDA	480 V	3	21 A	25 A	
CU-5B	12	144000 Btu/h	162000 Btu/h	R410A	Daikin	REYQ144AAYDA	480 V	3	21 A	25 A	
CU-6	1.5	18000 Btu/h		R-410A	Daikin	RK18BXVJU	208 V	1	14 A	20 A	

NOTES:
1. PROVIDE AND INSTALL MANUFACTURER'S SPECIFIED:
   1.1 MULTI CONNECTION PIPING KIT
   1.2 BRANCH SELECTOR CLOSED PIPE KIT

2. INSTALL UNIT ON 18" ROOF RAILS WITH VIBRATION ISOLATION
3. WIND BAFFLE

DEDICATED OUTDOOR AIR UNITS

TAG	LOCATION	MODEL	SUPPLY FAN				EXHAUST FAN		ENERGY RECOVERY						COOLING								HEAT PUMP			
			AIRFLOW (CFM)	ESP (IN. W.G.)	TSP (IN. W.G.)	MOTOR SIZE (HP)	AIRFLOW (CFM)	ESP (IN. W.G.)	RECOVERED CAPACITY		MIXED AIR LAT		EFFECTIVENESS		EAT		LAT		AMBIENT	TOTAL CAPACITY (BTU/H)	SENSIBLE CAPACITY (BTU/H)	REFRIGERANT	EAT	LAT	AMBIENT	TOTAL CAPACITY (BTU/H)
									COOLING (BTU/H)	HEATING (BTU/H)	COOLING DB (°F)	HEATING DB (°F)	TOTAL COOLING	TOTAL HEATING	DB (°F)	WB (°F)	DB (°F)	WB (°F)	DB (°F)				DB (°F)	DB (°F)	DB (°F)	
DOAS 1	ROOF	DPS018A	6700	1	3.4	7.5	6700	1	127207	323857	79.4	49.5	0.53	0.63	79.4	66.9	57.8	57.7	95.0	197381	158762	R410A	49.5	63.7	10.0	104011
DOAS 2	ROOF	DPS018A	6700	1	3.4	7.5	6700	1	127207	323857	79.4	49.5	0.53	0.63	79.4	66.9	57.8	57.7	95.0	197381	158762	R410A	49.5	63.7	10.0	104011

DEDICATED OUTDOOR AIR UNITS (CONT.)

TAG	ELECTRIC HEATING				FILTERS		UNIT EFFICIENCY		ELECTRICAL				MANUFACTURER	REMARKS
	EAT (°F)	LAT (°F)	SIZE (KW)	CONTROL	FACE AREA (SQ. FT)	EFFICIENCY	EER / SEER	IEER	VOLTAGE (V)	PHASE (Ø)	MCA (A)	MROPD (A)		
DOAS 1	49.5	77.7	60	SCR	27	2" MERV 8 & 4" BLANK	10.8	-	460	3	126	150	DAIKIN	
DOAS 2	49.5	77.7	60	SCR	27	2" MERV 8 & 4" BLANK	10.8	-	460	3	126	150	DAIKIN	

NOTES:
1. NON-FUSED DISCONNECT SWITCH
2. MODULATING HOT GAS REHEAT COIL
3. INVERTER SCROLL COMPRESSOR
4. DIRTY FILTER SWITCH
5. 14" ROOF CURB
6. PHASE LOSS PROTECTION
7. BACNET INTERFACE CARD
8. FACTORY INSTALLED UNIT CONTROLLER
9. STAINLESS STEEL DRAIN PAN WITH CONDENSATE OVERFLOW SWITCH
10. FIXED PLATE ENERGY RECOVERY CORE

AIR OUTLETS

DESIGNATION	MNF / MODEL NO.	DESCRIPTION	FACE SIZE (IN)	AIRFLOW RANGE		NECK SIZE DIAMETER (IN.)
				MIN	MAX	
A	NAILOR/UNI	SQUARE FACE CEILING DIFFUSER	24X24	0	200	6
				201	315	8
				316	450	10
				451	650	12
				651	850	14
B	NAILOR/6145H	CEILING RETURN GRILLE	SEE PLANS	-	-	NA
C	NAILOR/6145H-O	DUCT / WALL MOUNTED RETURN GRILLE	8X8	-	100	NA
			10X8	-	150	
			12X8	-	200	
			14X8	-	230	
			12X10	-	260	
			18X8	-	310	
			16X10	-	360	
D	NAILOR/61DH-O	DUCT / WALL MOUNTED SUPPLY GRILLE	8X8	-	150	NA
			10X8	-	225	
			12X8	-	275	
			14X8	-	320	
			12X10	-	350	
			18X8	-	425	
			16X10	-	500	
E	NAILOR/FL	1 SLOT LINEAR DIFFUSER	1" SLOT	-	40 CFM/FT	NA
			1.5" SLOT	-	60 CFM/FT	
			2" SLOT	-	75 CFM/FT	
		2 SLOT LINEAR DIFFUSER	1" SLOT	-	75 CFM/FT	
			1.5" SLOT	-	100 CFM/FT	

HVAC SCHEDULE - FIN TUBE SCHEDULE

BASIS OF DESIGN: STERLING

UNIT ID	ENT. AIR TEMP. (F)	FINNED LENGTH (FT.-IN.)	WATER DATA					FIN TUBE DATA						ENCLOSURE DATA					MODEL	REMARKS
			BTU/LF	FLOW RATE	ENT.TEMP	VEL.COR. FACTOR	TEMP. DROP	TUBE SIZE	FIN SIZE	ROWS	FIN THICKNESS	FIN/FT	ELEMENT MATERIAL	TYPE	HEIGHT	DEPTH (IN)	LENGTH	MOUNT HEIGHT		
FTR-A	65 °F	VARIES	933	1 GPM	140 °F	0.938	25	3/4"	4-1/4" x 3-5/8"	2	0.02"	50	COPPER / ALUMINIUM	FLAT TOP	2' - 4"	5"	VARIES	4"	JDVB C3/4-435	
FTR-A	65 °F	VARIES	933	1 GPM	140 °F	0.938	25	3/4"	4-1/4" x 3-5/8"	2	0.02"	50	COPPER / ALUMINIUM	FLAT TOP	2' - 0"	6"	VARIES	4"	JDVB C3/4-435	

DUCTLESS SPLIT SYSTEM AC

EQUIPMENT NO.	LOCATION	AREA SERVED	PERFORMANCE / CONSTRUCTION REQUIREMENTS								MNF.	MODEL NO.		ELECTRICAL DATA				REMARKS
			SUPPLY UNIT DATA				REMOTE CONDENSING UNIT							INTERIOR UNIT		EXTERIOR UNIT		
			FLOW (CFM)	TOTAL COOLING CAPACITY	MAX DBA	SEER / EER	OUTSIDE AIR TEMP MIN/MAX (°F)	MIN. FAN QUANTITY	MIN. COMPRESSOR QUANTITY	WEIGHT (LBS)		INTERIOR	EXTERIOR	VOLTS / PHASE	MCA	VOLTS / PHASE	MCA / MOCP	
AC-I001A / CU-6	ELECTRICAL ROOM	ELECTRICAL ROOM	600	18,000	49	18.5 / 12.5	-4 / 115	1	1	99	DAIKIN	FTK18AXVJU	RK18AXVJU	208 / 1	.63	208 / 1	12.8 / 20	

NOTES:
1. FURNISH AND INSTALL OPTIONAL CONDENSATE LIFT MECHANISM AS PART OF COMPLETE INDOOR UNIT SELECTION
2. PROVIDE WIRED REMOTE TEMPERATURE AND HUMIDITY SENSOR/CONTROLLER
3. INSTALL EXTERIOR UNIT ON 18" ROOF RAILS WITH VIBRATION ISOLATION
4. PROVIDE EXTERIOR UNIT WITH WIND BAFFLE

ELECTRIC UNIT HEATERS

EQUIPMENT NO.	LOCATION	BTU/HR	HEATING COIL DATA			BASIS OF DESIGN INFORMATION				CFM	REMARKS
			VOLTS / PHASE	AMPS	WATTS	MNF	MODEL. NO	NOMINAL DIMENSIONS L x W x H	NOMINAL OPERATING WEIGHT (LBS.)		
UH-1	MECHANICAL ROOM	13,651	208 / 1	20	4000	STELPRO	ARUH4TCHAR	14 x 12 x 12	20	350	
UH-2	ELECTRICAL ROOM	13,651	208 / 1	20	4000	STELPRO	ARUH4TCHAR	14 x 12 x 12	20	350	

NOTES:
1. PROVIDE UNIT MOUNTED THERMOSTAT
2. PROVIDE UNIVERSAL WALL/CEILING MOUNTING BRACKET

H2M architects + engineers
538 Broad Hollow Road, 4th Floor East
Melville, NY 11747
631.756.8000 • www.h2m.com
Land Surveying Certificate of Authorization No.: 0018178
Engineering Certificate of Authorization No.: 0018438

CONSULTANTS:

MARK	DATE	DESCRIPTION

STATE OF NEW YORK · BRIAN CASTELLI · 099167 · LICENSED PROFESSIONAL ENGINEER

DESIGNED BY:	DRAWN BY:	CHECKED BY:	REVIEWED BY:
RVS	RVS	BMC	-
PROJECT No: WPSD2203	DATE: FEBRUARY 2025	SCALE: AS SHOWN	

CLIENT
WHITE PLAINS CITY SCHOOL DISTRICT

HIGH SCHOOL ADDITION

White Plains Public Schools · WP · REAL LIFE LEARNING

66-22-00-01-0-016-030

CONTRACT
CONTRACT M

STATUS
FINAL BID DOCUMENT

SHEET TITLE
HVAC SCHEDULES

DRAWING No.
M 301.00

C:\Users\bcastelli\Documents\WPS02203_Central21_M_bcastelli789SCD.rvt
3/21/2025 5:09:43 PM

SHELL AND TUBE HEAT EXCHANGERS

EQUIPMENT NO.	LOCATION	SYSTEM SERVED	SHELL SIDE DATA – STEAM DATA			TUBE SIDE DATA						BASIS OF DESIGN INFORMATION				REMARKS
			PRESSURE (PSIG)	FLOW (LBS.HR)	SATURATED STEAM TEMP (°F)	FLUID	FLOW RATE (GPM)	FLUID VELOCITY (FT/MIN)	INLET TEMP. (°F)	OUTLET TEMP. (°F)	MAX P. D. (IN. W.C)	MNF	MODEL NO.	NOMINAL DIMENSIONS DIA. x L	SHIPPING WEIGHT (LBS.)	
HX-1-1	BOILER ROOM	ADDITION 1 HHW	5	1068.1	227.16	WATER	70	1.12	150	180	0.06	TACO	E12206-S	12 x 36	510	-

NOTES:

HEATING HOT WATER PUMPS

EQMT. NO.	LOCATION	SYSTEM SERVED	PERFORMANCE/CONSTRUCTION REQUIREMENTS (EACH PUMP)							BASIS OF DESIGN INFORMATION					REMARKS
			FLUID	FLOW RATE (GPM)	TOTAL HEAD (FT.)	HP	PUMP SPEED (RPM)	DISCHARGE SIZE (IN)	SUCTION SIZE (IN)	MNF	MODEL NO.	NOMINAL DIMENSIONS L x W x H	NOMINAL OPERATING WEIGHT (LBS.)	VOLTS/PHASE	
HHWP-1&2	BOILER ROOM	ADDITION 1 HHW	WATER	70	50	3	1760	3	3	TACO	SKV-3009	32 x 28 x 33	306	208/3	1-5

NOTES:

1. OPEN DRIP PROOF MOTOR
2. ANSI CLASS 125
3. ONE PUMP ON STANDBY
4. PROVIDE STAND
5. MANUFACTURER PROVIDED DISCONNECT SWITCH

DUPLEX CONDENSATE PUMPS

EQUIPMENT NO.	LOCATION	SYSTEM SERVED	PERFORMANCE/CONSTRUCTION REQUIREMENTS					BASIS OF DESIGN INFORMATION				REMARKS
			CAPACITY (EDR)	CONDENSATE PUMPS				MNF	MODEL NO.	NOMINAL DIMENSIONS L x W x H (IN.)	ELECTRICAL DATA	
				QUANTITY	SIMULTANEOUS CAPACITY (GPM)	DISCHARGE PRESS. (PSIG)	HP				VOLTS/PHASE	
CP-1-1	BOILER ROOM	HX-1-1	6,000	2	9	20	1/3	SHIPCO	ECC-D	19 x 16 x 42.5	208/3	1-4

NOTES:

1. UNIT MOUNTED CONTROL PANEL WITH SINGLE POINT POWER FEED, DISCONNECT SWITCH, INTEGRAL MOTOR STARTERS, AND ALARM SYSTEM
2. CONTROL PANEL TO BE ATTACHED DURING INSTALLATION (SHIPPED LOOSE)
3. 304SS RECEIVER WITH INTERNAL ACCUMULATOR TANK
4. HIGH TEMPERATURE LIMIT SWITCH.

EXPANSION TANKS

EQMT. NO.	LOCATION	SYSTEM SERVED	PERFORMANCE/CONSTRUCTION REQUIREMENTS – SYSTEM DATA			BASIS OF DESIGN INFORMATION					REMARKS
			TANK VOLUME (GAL.)	MAX. OPERATING PRESS. RANGE (PSIG)	OPERATING TEMP. RANGE (°F)	MNF	MODEL NO.	NOMINAL DIMENSION DIA. x H	ACCEPTANCE VOLUME (IN.)	NOMINAL OPERATING WEIGHT (LBS.)	
ET-1	BOILER ROOM	ADDITION 1 HHW	79	18-40	40 - 180	TACO	PAX-300	24x58	43	658	1

NOTES:

1. UNIT PAINTED STEEL TANK.
2. NSF/ANSI-61-G COMPLIANT

AIR/DIRT SEPARATORS

EQMT. NO.	LOCATION	SYSTEM SERVED	PERFORMANCE REQUIREMENTS		BASIS OF DESIGN INFORMATION				REMARKS
			FLOW RATE (GPM)	MAX. PD (FT. H2O)	MNF	MODEL NO.	NOMINAL DIMENSION DIA. x H	NOMINAL OPERATING WEIGHT (LBS.)	
ADS-1-1	BOILER ROOM	ADDITION 1 HHW	70	1	TACO	4903AD-125	12 x 25	85	1-2

NOTES:

1. AIR VENT
2. BLOW DOWN PIPED TO DRAIN

H2M architects + engineers

2 Executive Blvd., Suite 401
Suffern, NY 10901
845.357.7238 • www.h2m.com

CONSULTANTS:

MARK	DATE	DESCRIPTION

STATE OF NEW YORK · BRIAN CASTELLI · 099167 · LICENSED PROFESSIONAL ENGINEER

"ALTERATION OF THIS DOCUMENT EXCEPT BY A LICENSED PROFESSIONAL IS ILLEGAL"

DESIGNED BY:	DRAWN BY:	CHECKED BY:	REVIEWED BY:
SFP	KMG		
PROJECT No.: WPSD2203	DATE: NOVEMBER 2024	SCALE: AS SHOWN	

CLIENT

White Plains City School District

WHITE PLAINS HIGH SCHOOL ADDITION

550 North Street
White Plains, NY 10605

SED Number:

CONTRACT

CONTRACT G
GENERAL CONSTRUCTION

STATUS

FINAL BID DOCUMENT

SHEET TITLE

MECHANICAL SCHEDULES ALTERNATE M-2

DRAWING No.

M302.00

X:\WPSD (White Plains Central School District) - 1699\WPSD-2203 - (HS Addition)\02-BIM-CAD\Civil\acad\hvac\White Plains 4_Schedules.dwg Last Modified: Mar 21, 2025 - 3:45pm Plotted on: Mar 21, 2025 - 3:47pm By: kcastelli

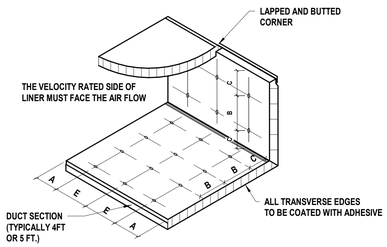

VELOCITY*	DIMENSIONS			
	A	B	C	E
0-1500 FPM	3"	12"	4"	18"
1501-3500 FPM	3"	6"	4"	16"

*UNLESS A LOWER LEVEL IS SET BY MANUFACTURER OR LISTING AGENCY

1 ACOUSTICAL LINER FASTENING DETAIL
SCALE: 12" = 1'-0"

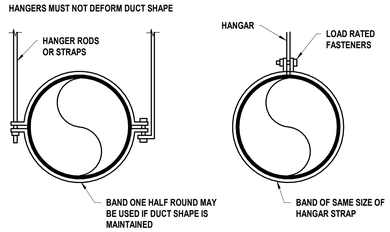

DUCT DIAMETER	BLK. OR GALV. ROD	GALVE STEEL STRAP
TO 10"	1/4"	1" X 22 GA.
11" TO 18"	1/4"	1" X 22 GA.
19" TO 24"	1/4"	1" X 22 GA.

NOTES:

1. SPACING 8'-0" ON CENTERS MAX

2 ROUND DUCT HANGERS
SCALENTS

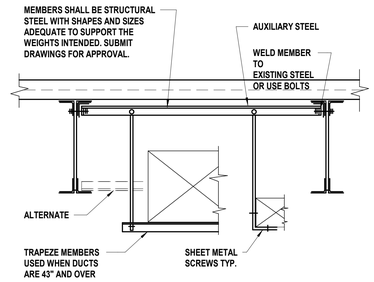

3 DUCT SUPPORT DETAIL
SCALENTS

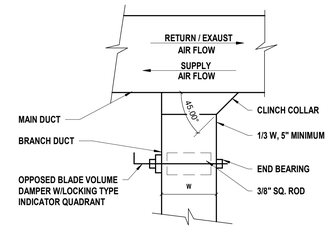

NOTE:

1. FURNISH THIS TYPE OF CONNECTION WHEN SINGLE LINE DUCTWORK IS INDICATED AS SHOWN FOR LOW PRESSURE BRANCHES WITH LESS THAN 33% CAPACITY OF MAIN DUCT.

4 DUCT BRANCH TAKEOFF FOR LOW PRESSURE DUCTWORK
SCALE: 12" = 1'-0"

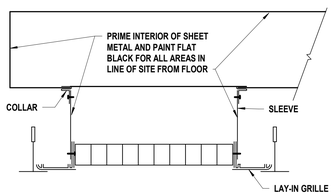

NOTES:

1. PROVIDE A GRILLE WITH A LAY-IN ALUMINUM FRAME/BORDER
2. PROVIDE CONCEALED SCREW HOLES IN NECK.
3. PROVIDE CLINCH LOCK DUCT COLLAR AND TELESCOPE SLEEVE.
4. SECURE GRILLE FRAME/TO SLEEVE AND DUCT COLLAR TO SLEEVE.

5 DUCTED EXHAUST CEILING GRILLE DETAIL
SCALENTS

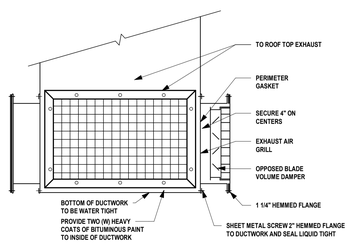

6 EXHAUSTED AIR REGISTER MOUNTING DETAIL
SCALENTS

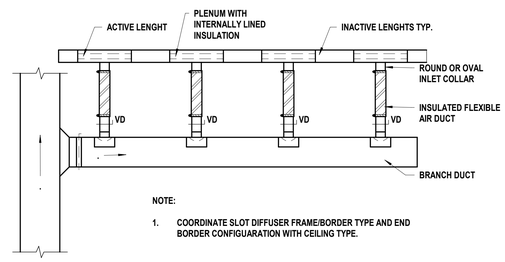

NOTE:

1. COORDINATE SLOT DIFFUSER FRAME/BORDER TYPE AND END BORDER CONFIGUARATION WITH CEILING TYPE.

7 LINEAR SLOT DIFUSSER
SCALENTS

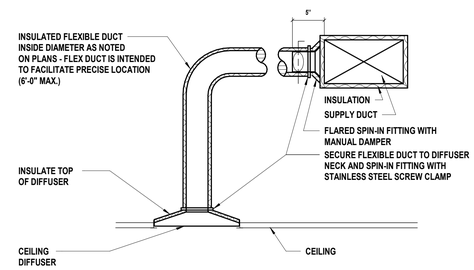

8 DIFFUSER CONNECTION CEILING
SCALENTS

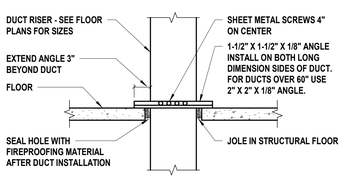

0.5 INCH W.G. TO 2 INCHES W.G. DUCT RISER SUPPORT

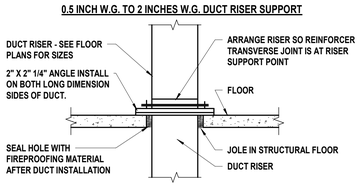

2 INCHES W.G. TO 4 INCHES W.G. DUCT RISER SUPPORT

NOTES:

1 ALL DUCT WORK RISERS WHICH ARE RUN EXPOSED, SUCH AS THRU ATTIC FLOORS AND FAN ROOM FLOORS SHALL BE PROVIDED WITH A 3" HIGH CONCRETE CURB AROUND OPENING FOR DUCT

9 DUCT RISER SUPPORTS
SCALENTS

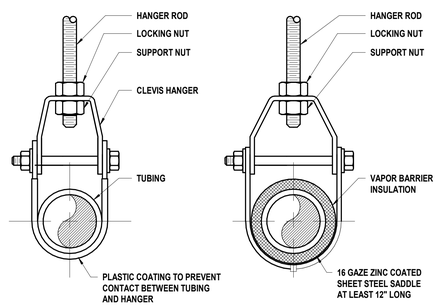

10 COPPER TUBING HANGER DETAILS
SCALENTS

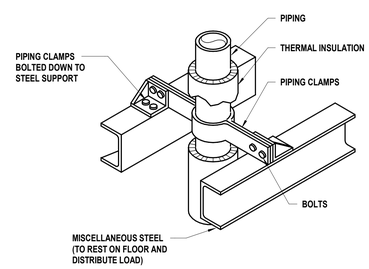

11 PIPE RISER ANCHOR DETAIL
SCALE: 12" = 1'-0"

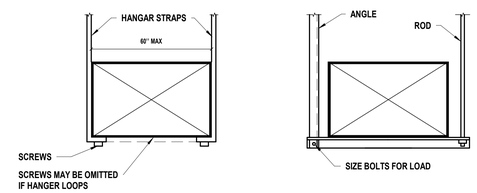

NOTES:

1. SIZE ALL SUPPORTS IN ACCORDANCE WITH THE SMACNA DUCT CONSTRUCTION STANDARDS, LATEST EDITION.

12 HANGER DETAIL
SCALENTS

H2M architects + engineers
538 Broad Hollow Road, 4th Floor East
Melville, NY 11747
631.756.8000 • www.h2m.com
Land Surveying Certificate of Authorization No.: 0018178
Engineering Certificate of Authorization No.: 0018438

CONSULTANTS:

MARK	DATE	DESCRIPTION

STATE OF NEW YORK · BRIAN CASTELLI · 099167 · LICENSED PROFESSIONAL ENGINEER

DESIGNED BY:	DRAWN BY:	CHECKED BY:	REVIEWED BY:
RVS	RVS	BMC	"
PROJECT No: WPSD2203	DATE: FEBRUARY 2025	SCALE: AS SHOWN	

CLIENT

WHITE PLAINS CITY SCHOOL DISTRICT

HIGH SCHOOL ADDITION

White Plains Public Schools · REAL LIFE LEARNING

66-22-00-01-0-016-030

CONTRACT: CONTRACT M

STATUS: FINAL BID DOCUMENT

SHEET TITLE: HVAC BUILDING DETAILS

DRAWING No. M 400.00

C:\Users\bcastelli\Documents\WPSD2203_Central\21_M_bcastelli7R8KQ.rvt
3/21/2025 5:09:44 PM

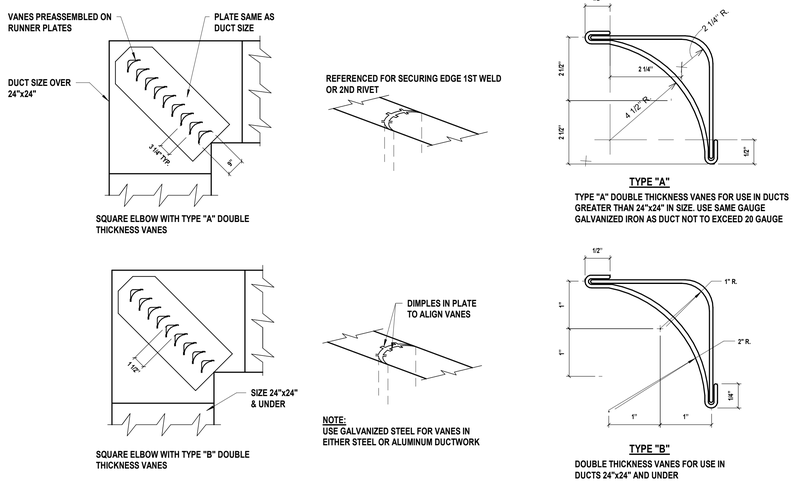

13 TURNING VANES DETAIL
SCALE:NTS

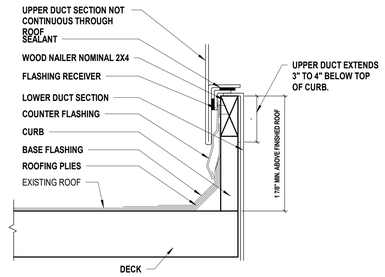

14 DUCTWORK ROOF PENETRATION DETAIL
SCALE:NTS

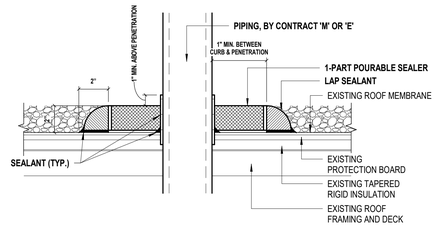

15 PITCH POCKET DETAIL
SCALE:NTS

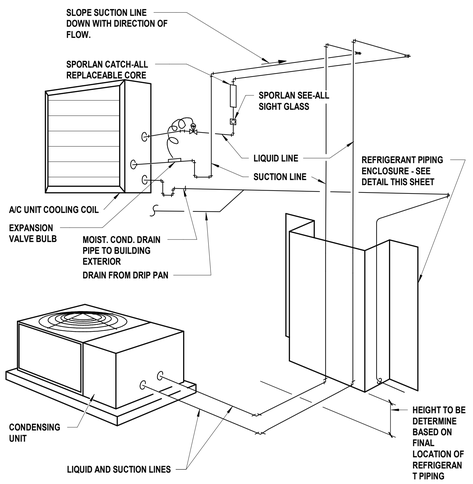

16 REFRIGERANT PIPING DETAIL
SCALE:NTS

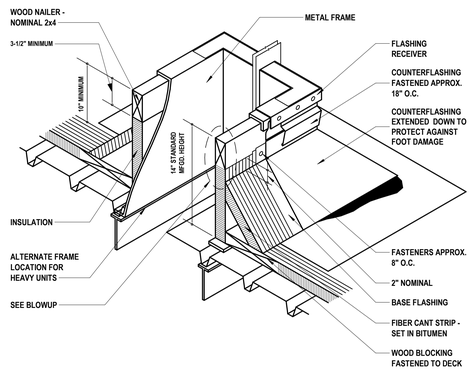

17 ROOF MOUNTING FRAME FOR ROOF TOP UNIT DETAIL
SCALE: 12" = 1'-0"

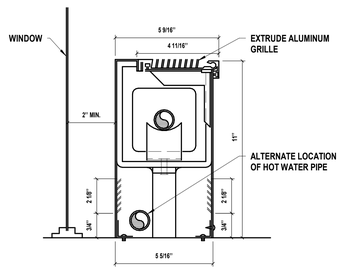

18 FINNED TUBE RADIATION ENCLOSURE DETAIL
SCALE: 12" = 1'-0"

H2M architects + engineers
538 Broad Hollow Road, 4th Floor East
Melville, NY 11747
631.756.8000 • www.h2m.com
Land Surveying Certificate of Authorization No.: 0018178
Engineering Certificate of Authorization No.: 0018438

CONSULTANTS:

MARK	DATE	DESCRIPTION

STATE OF NEW YORK · BRIAN CASTELLI · 099167 · LICENSED PROFESSIONAL ENGINEER

DESIGNED BY:	DRAWN BY:	CHECKED BY:	REVIEWED BY:
RVS	RVS	BMC	"
PROJECT No: WPSD2203	DATE: FEBRUARY 2025	SCALE: AS SHOWN	

CLIENT
WHITE PLAINS CITY SCHOOL DISTRICT

HIGH SCHOOL ADDITION

White Plains Public Schools · REAL LIFE LEARNING

66-22-00-01-0-016-030

CONTRACT
CONTRACT M

STATUS
FINAL BID DOCUMENT

SHEET TITLE
HVAC BUILDING DETAILS

DRAWING No.
M 401.00

C:\Users\bcastelli\Documents\WPSD2203_Centralv21_M_bcastelli7R9kCQ.rvt

3/21/2025 5:09:45 PM

FOR QUESTIONS, CALL THE
Long Island Office
REGION 43
PHONE: (516) 513-5398
EMAIL: reg43@captiveaire.com

PATENT NUMBERS

AC-PSP (UNITED STATES) - US PATENT 7963830 B2.
AC-PSP WALL (CANADA) - CA PATENT 2820509.
AC-PSP ISLAND (CANADA) - CA PATENT 2520330.

HOOD INFORMATION – JOB 15927219

HOOD NO	TAG	MODEL	MANUFACTURER	LENGTH	MAX COOKING TEMP	TYPE	APPLIANCE DUTY	DESIGN CFM/FT	TOTAL EXH CFM	EXHAUST PLENUM RISER(S) WIDTH	LENG	HEIGHT	DIA	CFM	VEL	SP	TOTAL SUPPLY CFM	HOOD CONSTRUCTION	HOOD CONFIG END TO END	ROW
1		4824 ND-2-PSP-F	CAPTIVEAIRE	4' 0"	600 DEG	I	HEAVY	200	800			4"	8"	800	2292	-0.662"	640	430 SS WHERE EXPOSED	ALONE	FRONT
2		4824 ND-2-PSP-F	CAPTIVEAIRE	4' 0"	600 DEG	I	HEAVY	200	800			4"	8"	800	2292	-0.662"	640	430 SS WHERE EXPOSED	ALONE	BACK
3		4824 ND-2-PSP-F	CAPTIVEAIRE	4' 0"	600 DEG	I	HEAVY	200	800			4"	8"	800	2292	-0.662"	640	430 SS WHERE EXPOSED	ALONE	FRONT
4		4824 ND-2-PSP-F	CAPTIVEAIRE	4' 0"	600 DEG	I	HEAVY	200	800			4"	8"	800	2292	-0.662"	640	430 SS WHERE EXPOSED	ALONE	BACK
5		4824 ND-2-PSP-F	CAPTIVEAIRE	4' 0"	600 DEG	I	HEAVY	200	800			4"	8"	800	2292	-0.662"	640	430 SS WHERE EXPOSED	ALONE	FRONT
6		4824 ND-2-PSP-F	CAPTIVEAIRE	4' 0"	600 DEG	I	HEAVY	200	800			4"	8"	800	2292	-0.662"	640	430 SS WHERE EXPOSED	ALONE	BACK
7		4824 ND-2-PSP-F	CAPTIVEAIRE	4' 0"	600 DEG	I	HEAVY	200	800			4"	8"	800	2292	-0.662"	640	430 SS WHERE EXPOSED	ALONE	FRONT
8		4824 ND-2-PSP-F	CAPTIVEAIRE	4' 0"	600 DEG	I	HEAVY	200	800			4"	8"	800	2292	-0.662"	640	430 SS WHERE EXPOSED	ALONE	BACK
9		5424 ND-2WI-PSP-FB	CAPTIVEAIRE	6' 0"	600 DEG	I	HEAVY	300	1800			4"	14"	1800	1684	-0.854"	1440	430 SS WHERE EXPOSED	ALONE	ALONE

HOOD INFORMATION

HOOD NO	TAG	FILTER(S) TYPE	QTY	HEIGHT	LENGTH	EFFICIENCY @ 7 MICRONS	LIGHT(S) QTY	TYPE	WIRE GUARD	UTILITY CABINET(S) LOCATION	SIZE	FIRE SYSTEM TYPE	SIZE	ELECTRICAL MODEL #	SWITCHES QUANTITY	FIRE SYSTEM PIPING	HOOD HANGING WEIGHT
1		CAPTRATE SOLO FILTER	2	20"	20"	85% SEE FILTER SPEC	1	RECESSED ROUND	NO	RIGHT	12"x48"x24"	TANK FS	4.0/4.0			YES	541 LBS
2		CAPTRATE SOLO FILTER	2	20"	20"	85% SEE FILTER SPEC	1	RECESSED ROUND	NO	LEFT	12"x48"x24"			DCV-2111	1 LIGHT 1 FAN	YES	385 LBS
3		CAPTRATE SOLO FILTER	2	20"	20"	85% SEE FILTER SPEC	1	RECESSED ROUND	NO	RIGHT	12"x48"x24"	TANK FS	4.0/4.0			YES	541 LBS
4		CAPTRATE SOLO FILTER	2	20"	20"	85% SEE FILTER SPEC	1	RECESSED ROUND	NO	LEFT	12"x48"x24"					YES	341 LBS
5		CAPTRATE SOLO FILTER	2	20"	20"	85% SEE FILTER SPEC	1	RECESSED ROUND	NO	RIGHT	12"x48"x24"	TANK FS	4.0/4.0			YES	541 LBS
6		CAPTRATE SOLO FILTER	2	20"	20"	85% SEE FILTER SPEC	1	RECESSED ROUND	NO	LEFT	12"x48"x24"					YES	341 LBS
7		CAPTRATE SOLO FILTER	2	20"	20"	85% SEE FILTER SPEC	1	RECESSED ROUND	NO	RIGHT	12"x48"x24"	TANK FS	4.0/4.0			YES	541 LBS
8		CAPTRATE SOLO FILTER	2	20"	20"	85% SEE FILTER SPEC	1	RECESSED ROUND	NO	LEFT	12"x48"x24"					YES	341 LBS
9		CAPTRATE SOLO FILTER	4	20"	16"	85% SEE FILTER SPEC	2	RECESSED ROUND	NO	RIGHT	12"x54"x24"	TANK FS	4.0/4.0			YES	719 LBS

HOOD

HOOD NO	TAG	OPTION
1		FIELD WRAPPER 18.00" HIGH FRONT, LEFT, RIGHT.
		SENSOR-CV.
2		FIELD WRAPPER 18.00" HIGH FRONT, LEFT, RIGHT.
		SENSOR-CV.
3		FIELD WRAPPER 18.00" HIGH FRONT, LEFT, RIGHT.
		SENSOR-CV.
4		FIELD WRAPPER 18.00" HIGH FRONT, LEFT, RIGHT.
		SENSOR-CV.
5		FIELD WRAPPER 18.00" HIGH FRONT, LEFT, RIGHT.
		SENSOR-CV.
6		FIELD WRAPPER 18.00" HIGH FRONT, LEFT, RIGHT.
		SENSOR-CV.
7		FIELD WRAPPER 18.00" HIGH FRONT, LEFT, RIGHT.
		SENSOR-CV.
8		FIELD WRAPPER 18.00" HIGH FRONT, LEFT, RIGHT.
		SENSOR-CV.
9		FIELD WRAPPER 18.00" HIGH FRONT, LEFT, RIGHT, BACK.
		FINISHED BACK- ISL/REV INSTALL 72.00" LONG, (FILTERS TO THE FRONT).
		SENSOR-CV.

PERFORATED SUPPLY PLENUM(S)

HOOD NO	TAG	POS	LENGTH	WIDTH	HEIGHT	TYPE	RISER(S) WIDTH	LENG	DIA	CFM	SP
1		Front	60"	16"	6"	MUA	8"	36"		640	0.183"
2		Front	60"	16"	6"	MUA	8"	36"		640	0.183"
3		Front	60"	16"	6"	MUA	8"	36"		640	0.183"
4		Front	60"	16"	6"	MUA	8"	36"		640	0.183"
5		Front	60"	16"	6"	MUA	8"	36"		640	0.183"
6		Front	60"	16"	6"	MUA	8"	36"		640	0.183"
7		Front	60"	16"	6"	MUA	8"	36"		640	0.183"
8		Front	60"	16"	6"	MUA	8"	36"		640	0.183"
9		Back	84"	12"	6"	MUA	6"	28"		360	0.107"
						MUA	6"	28"		360	0.107"
		Front	84"	12"	6"	MUA	6"	28"		360	0.107"
						MUA	6"	28"		360	0.107"

SPECIFICATION: CAPTRATE GREASE-STOP SOLO FILTER

THE CAPTRATE GREASE-STOP SOLO FILTER IS A SINGLE-STAGE FILTER FEATURING A UNIQUE S-BAFFLE DESIGN IN CONJUNCTION WITH A SLOTTED REAR BAFFLE DESIGN, TO DELIVER EXCEPTIONAL FILTRATION EFFICIENCY.

FILTER IS STAINLESS STEEL CONSTRUCTION, AND SIZED TO FIT INTO STANDARD 2-INCH DEEP HOOD CHANNEL(S).

UNITS SHALL INCLUDE STAINLESS STEEL HANDLES AND A FASTENING DEVICE TO SECURE THE TWO COMPONENTS WHEN ASSEMBLED.

GREASE EXTRACTION EFFICIENCY PERFORMANCE SHALL REMOVE AT LEAST 75% OF GREASE PARTICLES FIVE MICRONS IN SIZE, AND 85% GREASE PARTICLES SEVEN MICRONS IN SIZE AND LARGER, WITH A CORRESPONDING PRESSURE DROP NOT TO EXCEED 1.0 INCHES OF WATER GAUGE.

THE CAPTRATE GREASE-STOP SOLO WAS TESTED TO ASTM STANDARD ASTM F2519-05.
MANUFACTURER APPROVED FOR USE IN SOLID FUEL APPLICATIONS AS A SPARK ARRESTER.

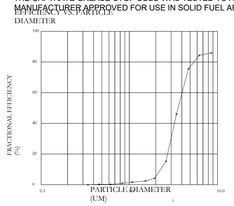

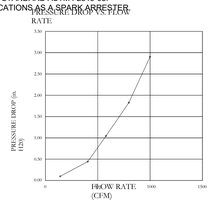

CAPTRATE FILTERS ARE BUILT IN COMPLIANCE WITH:.
NFPA #96.
NSF STANDARD #2.
UL STANDARD #1046.
INT. MECH. CODE (IMC).
ULC-S649.

RTD SENSOR INSTALLATION (IF NOT FACTORY INSTALLED)

NOTES: One RTD per Exhaust Fan
: RTD has 3 wires that connect to control cabinet

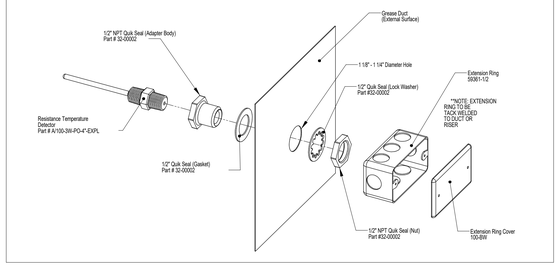

SYSTEM DESIGN VERIFICATION (SDV)

IF ORDERED, CAS SERVICE WILL PERFORM A SYSTEM DESIGN VERIFICATION (SDV) ONCE ALL EQUIPMENT HAS HAD A COMPLETE START UP PER THE OPERATION AND INSTALLATION MANUAL. TYPICALLY, THE SDV WILL BE PERFORMED AFTER ALL INSPECTIONS ARE COMPLETE.

ANY FIELD RELATED DISCREPANCIES THAT ARE DISCOVERED DURING THE SDV WILL BE BROUGHT TO THE ATTENTION OF THE GENERAL CONTRACTOR AND CORRESPONDING TRADES ON SITE. THESE ISSUES WILL BE DOCUMENTED AND FORWARDED TO THE APPROPRIATE SALES OFFICE. IF CAS SERVICE HAS TO RESOLVE A DISCREPANCY THAT IS A FIELD ISSUE, THE GENERAL CONTRACTOR WILL BE NOTIFIED AND BILLED FOR THE WORK. SHOULD A RETURN TRIP BE REQUIRED DUE TO ANY FIELD RELATED DISCREPANCY THAT CANNOT BE RESOLVED DURING THE SDV, THERE WILL BE ADDITIONAL TRIP CHARGES.

DURING THE SDV, CAS SERVICE WILL ADDRESS ANY DISCREPANCY THAT IS THE FAULT OF THE MANUFACTURER. SHOULD A RETURN TRIP BE REQUIRED, THE GENERAL CONTRACTOR AND APPROPRIATE SALES OFFICE WILL BE NOTIFIED. THERE WILL BE NO ADDITIONAL CHARGES FOR MANUFACTURER DISCREPANCIES.

PLAN VIEW – HOOD
4' 0.00" LONG
4824ND-2-PSP-F

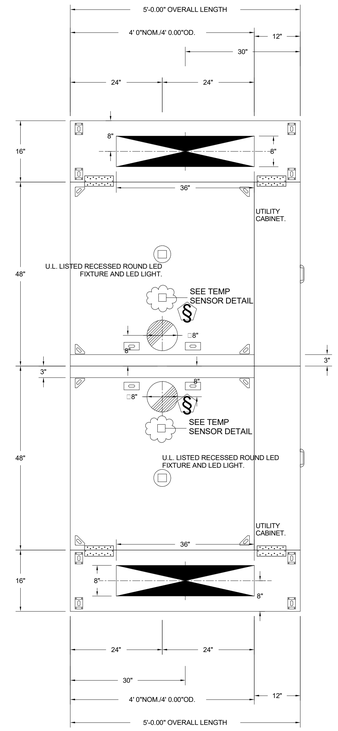

PLAN VIEW – HOOD
4' 0.00" LONG
4824ND-2-PSP-F

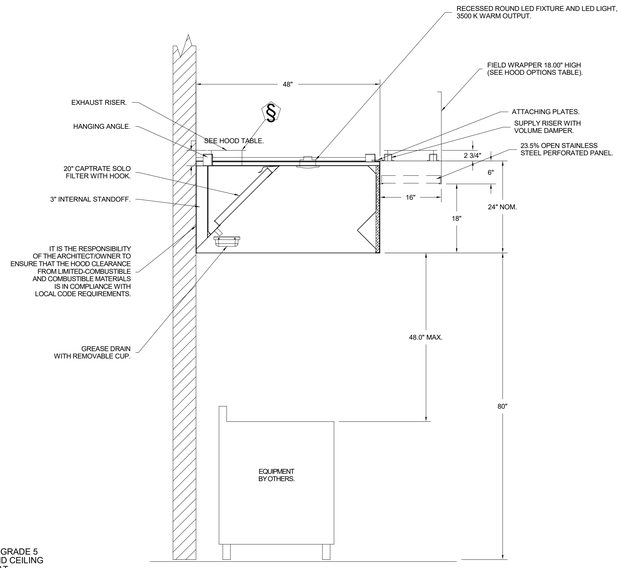

SECTION VIEW – MODEL
4824ND-2-PSP-F
#1

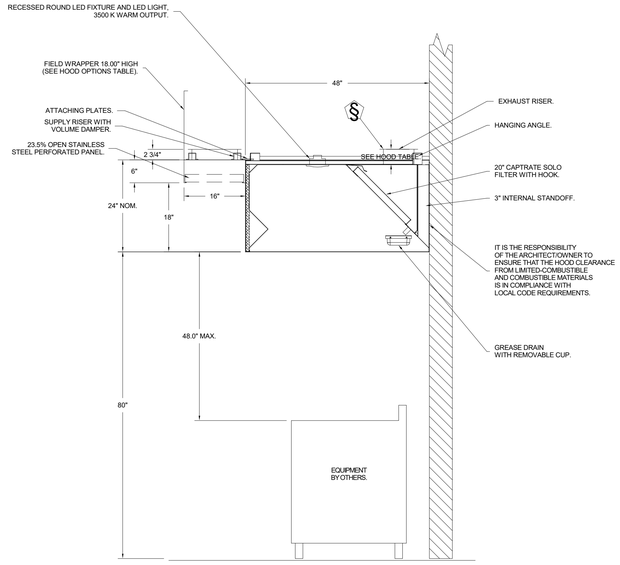

SECTION VIEW – MODEL
4824ND-2-PSP-F
#2

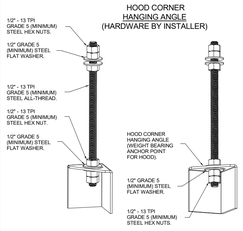

ASSEMBLY INSTRUCTIONS

HANGING ANGLE MUST BE SUPPORTED WITH 1/2" - 13 TPI GRADE 5 (MINIMUM) ALL-THREAD. SANDWICH HANGING ANGLES AND CEILING ANCHOR POINTS WITH 1/2" GRADE 5 (MINIMUM) STEEL FLAT WASHERS AND 1/2" - 13 TPI GRADE 5 (MINIMUM) HEX NUTS AS SHOWN. MUST USE DOUBLED HEX NUT CONFIGURATION BENEATH HOOD HANGING ANGLES AND ABOVE CEILING ANCHORS. MAINTAIN 1/4" OF EXPOSED THREADS BENEATH BOTTOM HEX NUT. TORQUE ALL HEX NUTS TO 57 FT-LBS.

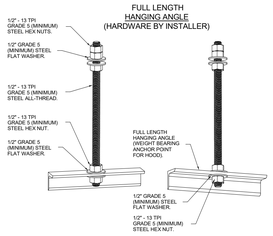

ASSEMBLY INSTRUCTIONS

HANGING ANGLE MUST BE SUPPORTED WITH 1/2" - 13 TPI GRADE 5 (MINIMUM) ALL-THREAD. SANDWICH HANGING ANGLES AND CEILING ANCHOR POINTS WITH 1/2" GRADE 5 (MINIMUM) STEEL FLAT WASHERS AND 1/2" - 13 TPI GRADE 5 (MINIMUM) HEX NUTS AS SHOWN. MUST USE DOUBLED HEX NUT CONFIGURATION ABOVE CEILING ANCHORS. SINGLE HEX NUT BENEATH HANGING ANGLES IS ACCEPTABLE FOR FULL LENGTH HANGING ANGLES. MAINTAIN 1/4" OF EXPOSED THREADS BENEATH BOTTOM HEX NUT. TORQUE ALL HEX NUTS TO 57 FT-LBS.

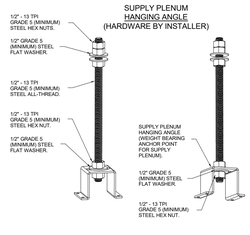

ASSEMBLY INSTRUCTIONS

HANGING ANGLE MUST BE SUPPORTED WITH 1/2" - 13 TPI GRADE 5 (MINIMUM) ALL-THREAD. SANDWICH HANGING ANGLES AND CEILING ANCHOR POINTS WITH 1/2" GRADE 5 (MINIMUM) STEEL FLAT WASHERS AND 1/2" - 13 TPI GRADE 5 (MINIMUM) HEX NUTS AS SHOWN. MUST USE DOUBLED HEX NUT CONFIGURATION ABOVE CEILING ANCHORS. SINGLE HEX NUT BENEATH HANGING ANGLE IS ACCEPTABLE FOR PSP HANGING ANGLES. MAINTAIN 1/4" OF EXPOSED THREADS BENEATH BOTTOM HEX NUT. TORQUE ALL HEX NUTS TO 57 FT-LBS.

H2M architects + engineers
538 Broad Hollow Road, 4th Floor East
Melville, NY 11747
631.756.8000 • www.h2m.com
Land Surveying Certificate of Authorization No.: 0018178
Engineering Certificate of Authorization No.: 0018438

CONSULTANTS:

MARK	DATE	DESCRIPTION

STATE OF NEW YORK · BRIAN CASTELLI · 099167 · LICENSED PROFESSIONAL ENGINEER

DESIGNED BY:	DRAWN BY:	CHECKED BY:	REVIEWED BY:
RVS	RVS	BMC	
PROJECT No: WPSD2203	DATE: FEBRUARY 2025	SCALE: AS SHOWN	

CLIENT
WHITE PLAINS CITY SCHOOL DISTRICT

HIGH SCHOOL ADDITION

White Plains Public Schools · REAL LIFE LEARNING

66-22-00-01-0-016-030

CONTRACT
CONTRACT M

STATUS
FINAL BID DOCUMENT

SHEET TITLE
HVAC BUILDING KITCHEN DETAILS SHEET 1 OF 15

DRAWING No.
M 500.00

C:\Users\bcastelli\Documents\WPSD2203_Central21_M_bcastelli75BGQ.rvt
3/21/2025 5:09:48 PM

PLAN VIEW – HOOD
4' 0.00" LONG
4824ND-2-PSP-F

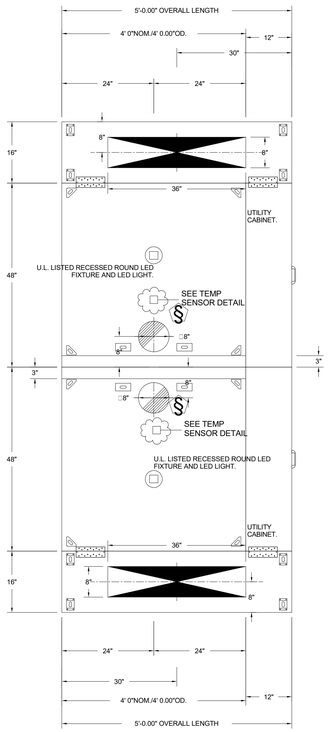

PLAN VIEW – HOOD
4' 0.00" LONG
4824ND-2-PSP-F

PLAN VIEW – HOOD
4' 0.00" LONG
4824ND-2-PSP-F

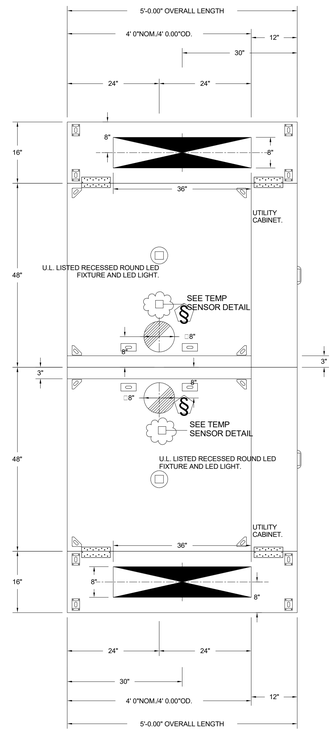

PLAN VIEW – HOOD
4' 0.00" LONG
4824ND-2-PSP-F

PLAN VIEW – HOOD
4' 0.00" LONG
4824ND-2-PSP-F

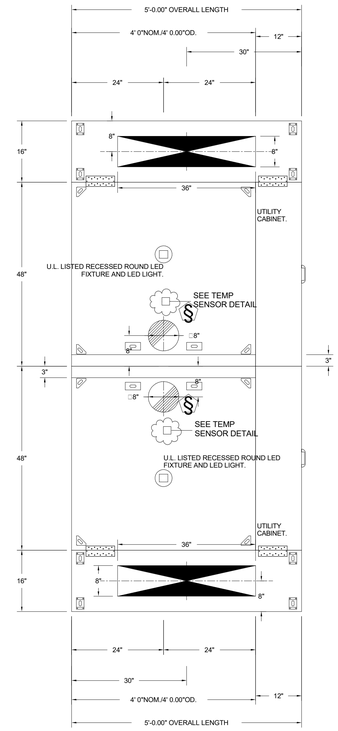

PLAN VIEW – HOOD
4' 0.00" LONG
4824ND-2-PSP-F

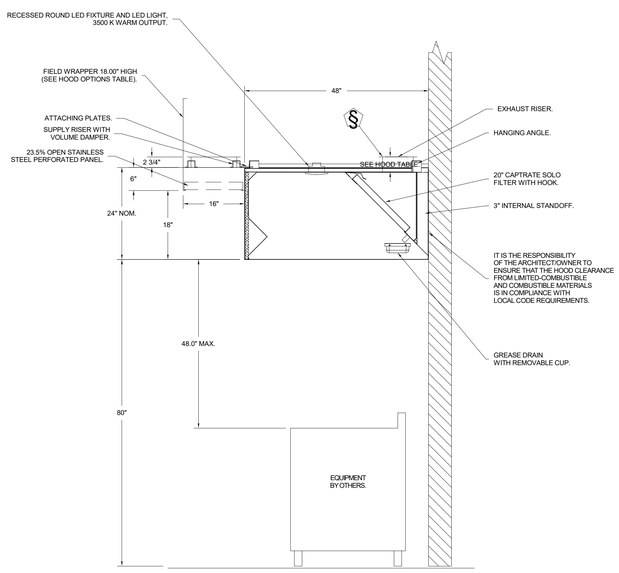

SECTION VIEW – MODEL
4824ND-2-PSP-F
#4

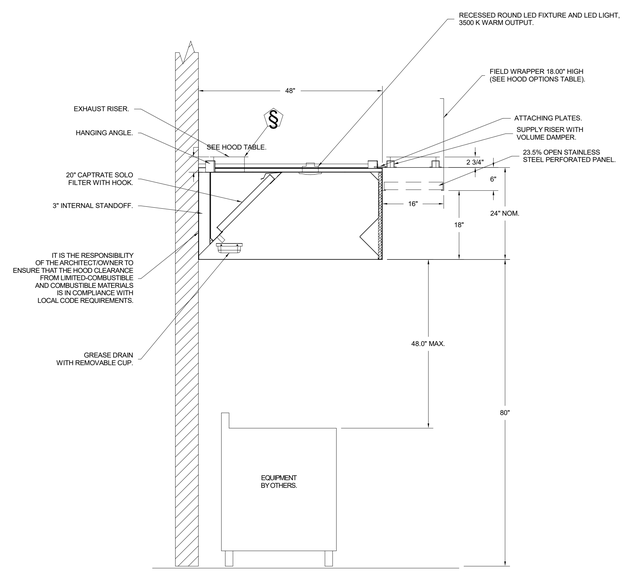

SECTION VIEW – MODEL
4824ND-2-PSP-F
#3

H 2 M architects + engineers

538 Broad Hollow Road, 4th Floor East
Melville, NY 11747
631.756.8000 • www.h2m.com
Land Surveying Certificate of Authorization No.: 0018178
Engineering Certificate of Authorization No.: 0018438

CONSULTANTS:

MARK	DATE	DESCRIPTION

STATE OF NEW YORK · BRIAN CASTELLI · 099167 · LICENSED PROFESSIONAL ENGINEER

DESIGNED BY:	DRAWN BY:	CHECKED BY:	REVIEWED BY:
RVS	RVS	BMC	-
PROJECT No: WPSD2203	DATE: FEBRUARY 2025	SCALE: AS SHOWN	

CLIENT

WHITE PLAINS CITY SCHOOL DISTRICT

HIGH SCHOOL ADDITION

White Plains Public Schools · WP · REAL LIFE LEARNING

66-22-00-01-0-016-030

CONTRACT

CONTRACT M

STATUS

FINAL BID DOCUMENT

SHEET TITLE

HVAC BUILDING KITCHEN DETAILS SHEET 2 OF 15

DRAWING No.

M 501.00

C:\Users\bcastelli\Documents\WPSD2203_Centralized_M_bcastelli7R9KDJ.rvt

3/21/2025 5:09:48 PM

PLAN VIEW – HOOD
6' 0.00" LONG
5424ND-2WI-PSP-FB

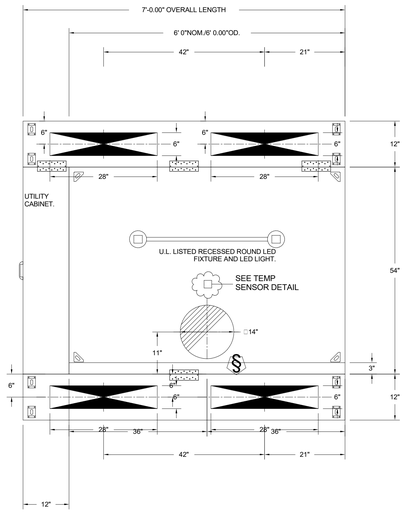

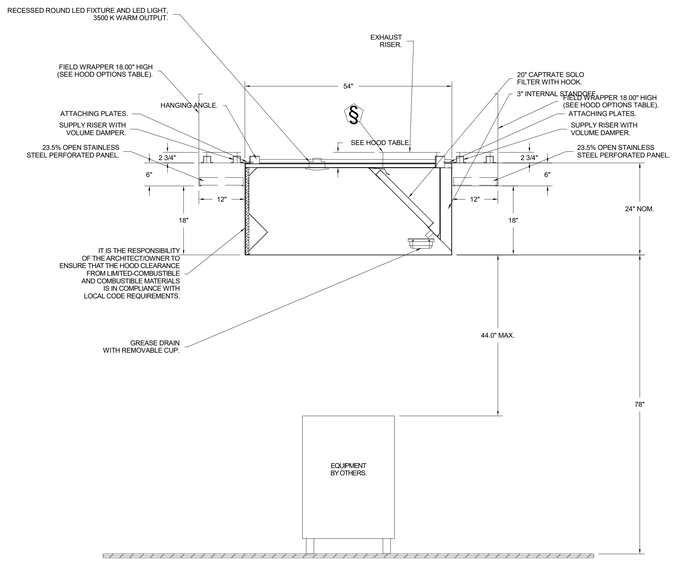

SECTION VIEW – MODEL
5424ND-2WI-PSP-FB
#9

H2M architects + engineers

538 Broad Hollow Road, 4th Floor East
Melville, NY 11747
631.756.8000 • www.h2m.com
Land Surveying Certificate of Authorization No.: 0018178
Engineering Certificate of Authorization No.: 0018438

CONSULTANTS:

MARK	DATE	DESCRIPTION

STATE OF NEW YORK · BRIAN CASTELLI · 099167 · LICENSED PROFESSIONAL ENGINEER

DESIGNED BY:	DRAWN BY:	CHECKED BY:	REVIEWED BY:
RVS	RVS	BMC	"
PROJECT No: WPSD2203	DATE: FEBRUARY 2025	SCALE: AS SHOWN	

CLIENT

WHITE PLAINS CITY SCHOOL DISTRICT

HIGH SCHOOL ADDITION

White Plains Public Schools · WP · REAL LIFE LEARNING

66-22-00-01-0-016-030

CONTRACT

CONTRACT M

STATUS

FINAL BID DOCUMENT

SHEET TITLE

HVAC BUILDING KITCHEN DETAILS SHEET 3 OF 15

DRAWING No.

M 502.00

C:\Users\bcastelli\Documents\WPSD2203_Central21_M_bcastelli78BCD.rvt
3/21/2025 5:09:47 PM

FIRE SYSTEM INFORMATION - JOB #5927219

FIRE SYSTEM NO	TAG	TYPE	SIZE	FLOW POINTS	INSTALLATION	
					SYSTEM	LOCATION ON HOOD
1		TANK FS	4.0/4.0	36	FIRE CABINET RIGHT	RIGHT, HOOD 1
2		TANK FS	4.0/4.0	36	FIRE CABINET RIGHT	RIGHT, HOOD 3
3		TANK FS	4.0/4.0	36	FIRE CABINET RIGHT	RIGHT, HOOD 5
4		TANK FS	4.0/4.0	36	FIRE CABINET RIGHT	RIGHT, HOOD 7
5		TANK FS	4.0/4.0	23	FIRE CABINET RIGHT	RIGHT, HOOD 9

FIRE SYSTEM PARTS LIST KEY

FIRE SYSTEM NO	TAG	KEY NUMBER - PART DESCRIPTION	QTY BY FACTORY	QTY BY DIST
1		0 - 0 - TANK FIRE SUPPRESSION POST-DISCHARGE PROCEDURE UTILITY CABINET LABEL SHEET.	1	0
		0 - 0 - TANK FIRE SUPPRESSION MAINTENANCE GUIDE UTILITY CABINET LABEL SHEET.	1	0
		0 - 0 - 12-F28021-32144-OT-360 DUCT FIRE THERMOSTAT WITH 12 FOOT WIRE LEADS. NO, CLOSE ON TEMP RISE AT 360°F.	2	0
		0 - 0 - 4429K153 1/2" MALE NPT TO 1/2" FEMALE NPT ELBOW, BRASS.	2	0
		0 - 0 - 4429K422 1/2" X 1/4" BRASS REDUCING BUSHING.	1	0
		0 - 0 - 79525 1/2" 90 PRO-PRESS ELBOW WITH 1/2" NPT FEMALE CONNECTION, VIEGA.	1	0
		0 - 0 - 79580 1/2" X 1/2" PRO-PRESS TEE X 1/2" NPT FEMALE CONNECTION, VIEGA.	2	0
		0 - 0 - 87-120042-001 SECONDARY ACTUATOR VALVE (SVA) - SINGLE ACTUATOR, REQUIRES PRIMARY RELEASE ACTUATOR, TANK FIRE SUPPRESSION.	1	0
		0 - 0 - 87-120045-001 HOSE, SECONDARY ACTUATOR HOSE, 7.5" BRAIDED STAINLESS STEEL, TANK FIRE SUPPRESSION.	1	0
		0 - 0 - 87-300001-001 TANK - PRESSURIZED TANK USED FOR TANK FIRE SUPPRESSION.	2	0
		0 - 0 - 87-300030-001 PRIMARY ACTUATOR KIT (PAK) - ACTUATOR AND RELEASE SOLENOID ASSEMBLY, ONE NEEDED PER FIRE SYSTEM, SUPERVISED, TANK FIRE SUPPRESSION.	1	0
		0 - 0 - 87-300152-001 HARDWARE, SVA BOLTS, TANK FIRE SUPPRESSION.	8	0
		0 - 0 - 98694A115 HARDWARE, DATANKLOCK LOCKING BRACKET SQUARE NUTS 5/16" ZINC, TANK FIRE SUPPRESSION.	4	0
		0 - 0 - A0034332 JUNCTION BOX FOR MANUAL PULL STATION. 1.5" DEEP BACK BOX, RED COLOR.	1	0
		0 - 0 - A31484 1/4" NPT SCHRADER VALVE AND CAP, JB INDUSTRIES. 1/4" FLARE X 1/4" MPT HALF UNION. USED ON TANK SERVICE PORT.	1	0
		0 - 0 - DATANKLOCK DISCHARGE ADAPTER TANK LOCKING PLATE FOR FIRE SYSTEM TANK INSTALLATION IN UTILITY CABINETS, TANK FIRE SUPPRESSION.	2	0
		0 - 0 - SLPCON-03FT SUPERVISED LOOP CONNECTION KIT. CONTAINS THE PARTS NEEDED TO CONNECT THE SUPERVISED LOOP BETWEEN END TO END HOODS WITH LESS THAN A 2' GAP. KIT CONTAINS 5 FEET OF BLACK MG WIRE, 5 FEET OF TAN MG WIRE, 3 FEET OF FLEXIBLE CONDUIT, AND TWO 7/8" CONNECTORS.	1	0
		0 - 0 - SLPCON-15FT SUPERVISED LOOP CONNECTION KIT. CONTAINS THE PARTS NEEDED TO CONNECT THE SUPERVISED LOOP BETWEEN END TO END HOODS WITH LESS THAN A 14' GAP OR BACK TO BACK HOODS. KIT CONTAINS 17 FEET OF BLACK MG WIRE, 17 FEET OF TAN MG WIRE, 15 FEET OF FLEXIBLE CONDUIT, AND TWO 7/8" CONNECTORS.	2	0
		0 - 0 - TANK STRAP TANK STRAP - USED FOR TANK FIRE SUPPRESSION.	6	0
		0 - 0 - TFS-UCTANKBRACKET TANK BRACKET FOR FIRE SYSTEM TANK INSTALLATION IN UTILITY CABINETS, TANK FIRE SUPPRESSION.	2	0
		0 - 0 - WK-283952-000 DISCHARGE ADAPTER, TANK FIRE SUPPRESSION.	2	0
		34 - 34 - A0034331 24VDC SINGLE ACTION MANUAL ACTUATION DEVICE (PUSH/PULL STATION) WITH PROTECTIVE COVER, ONE (1) NORMALLY OPEN CONTACT, RED COLOR.	1	0
2		0 - 0 - TANK FIRE SUPPRESSION POST-DISCHARGE PROCEDURE UTILITY CABINET LABEL SHEET.	1	0
		0 - 0 - TANK FIRE SUPPRESSION MAINTENANCE GUIDE UTILITY CABINET LABEL SHEET.	1	0
		0 - 0 - 12-F28021-32144-OT-360 DUCT FIRE THERMOSTAT WITH 12 FOOT WIRE LEADS. NO, CLOSE ON TEMP RISE AT 360°F.	2	0
		0 - 0 - 4429K153 1/2" MALE NPT TO 1/2" FEMALE NPT ELBOW, BRASS.	2	0
		0 - 0 - 4429K422 1/2" X 1/4" BRASS REDUCING BUSHING.	1	0
		0 - 0 - 79525 1/2" 90 PRO-PRESS ELBOW WITH 1/2" NPT FEMALE CONNECTION, VIEGA.	1	0
		0 - 0 - 79580 1/2" X 1/2" PRO-PRESS TEE X 1/2" NPT FEMALE CONNECTION, VIEGA.	2	0
		0 - 0 - 87-120042-001 SECONDARY ACTUATOR VALVE (SVA) - SINGLE ACTUATOR, REQUIRES PRIMARY RELEASE ACTUATOR, TANK FIRE SUPPRESSION.	1	0
		0 - 0 - 87-120045-001 HOSE, SECONDARY ACTUATOR HOSE, 7.5" BRAIDED STAINLESS STEEL, TANK FIRE SUPPRESSION.	1	0
		0 - 0 - 87-300001-001 TANK - PRESSURIZED TANK USED FOR TANK FIRE SUPPRESSION.	2	0
		0 - 0 - 87-300030-001 PRIMARY ACTUATOR KIT (PAK) - ACTUATOR AND RELEASE SOLENOID ASSEMBLY, ONE NEEDED PER FIRE SYSTEM, SUPERVISED, TANK FIRE SUPPRESSION.	1	0
		0 - 0 - 87-300152-001 HARDWARE, SVA BOLTS, TANK FIRE SUPPRESSION.	8	0
		0 - 0 - 98694A115 HARDWARE, DATANKLOCK LOCKING BRACKET SQUARE NUTS 5/16" ZINC, TANK FIRE SUPPRESSION.	4	0
		0 - 0 - A0034332 JUNCTION BOX FOR MANUAL PULL STATION. 1.5" DEEP BACK BOX, RED COLOR.	1	0
		0 - 0 - A31484 1/4" NPT SCHRADER VALVE AND CAP, JB INDUSTRIES. 1/4" FLARE X 1/4" MPT HALF UNION. USED ON TANK SERVICE PORT.	1	0
		0 - 0 - DATANKLOCK DISCHARGE ADAPTER TANK LOCKING PLATE FOR FIRE SYSTEM TANK INSTALLATION IN UTILITY CABINETS, TANK FIRE SUPPRESSION.	2	0
		0 - 0 - SLPCON-03FT SUPERVISED LOOP CONNECTION KIT. CONTAINS THE PARTS NEEDED TO CONNECT THE SUPERVISED LOOP BETWEEN END TO END HOODS WITH LESS THAN A 2' GAP. KIT CONTAINS 5 FEET OF BLACK MG WIRE, 5 FEET OF TAN MG WIRE, 3 FEET OF FLEXIBLE CONDUIT, AND TWO 7/8" CONNECTORS.	1	0
		0 - 0 - SLPCON-15FT SUPERVISED LOOP CONNECTION KIT. CONTAINS THE PARTS NEEDED TO CONNECT THE SUPERVISED LOOP BETWEEN END TO END HOODS WITH LESS THAN A 14' GAP OR BACK TO BACK HOODS. KIT CONTAINS 17 FEET OF BLACK MG WIRE, 17 FEET OF TAN MG WIRE, 15 FEET OF FLEXIBLE CONDUIT, AND TWO 7/8" CONNECTORS.	2	0
		0 - 0 - TANK STRAP TANK STRAP - USED FOR TANK FIRE SUPPRESSION.	6	0
		0 - 0 - TFS-UCTANKBRACKET TANK BRACKET FOR FIRE SYSTEM TANK INSTALLATION IN UTILITY CABINETS, TANK FIRE SUPPRESSION.	2	0
		0 - 0 - WK-283952-000 DISCHARGE ADAPTER, TANK FIRE SUPPRESSION.	2	0
		34 - 34 - A0034331 24VDC SINGLE ACTION MANUAL ACTUATION DEVICE (PUSH/PULL STATION) WITH PROTECTIVE COVER, ONE (1) NORMALLY OPEN CONTACT, RED COLOR.	1	0
3		0 - 0 - TANK FIRE SUPPRESSION MAINTENANCE GUIDE UTILITY CABINET LABEL SHEET.	1	0
		0 - 0 - TANK FIRE SUPPRESSION POST-DISCHARGE PROCEDURE UTILITY CABINET LABEL SHEET.	1	0
		0 - 0 - 12-F28021-32144-OT-360 DUCT FIRE THERMOSTAT WITH 12 FOOT WIRE LEADS. NO, CLOSE ON TEMP RISE AT 360°F.	2	0
		0 - 0 - 4429K153 1/2" MALE NPT TO 1/2" FEMALE NPT ELBOW, BRASS.	2	0
		0 - 0 - 4429K422 1/2" X 1/4" BRASS REDUCING BUSHING.	1	0
		0 - 0 - 79525 1/2" 90 PRO-PRESS ELBOW WITH 1/2" NPT FEMALE CONNECTION, VIEGA.	1	0
		0 - 0 - 79580 1/2" X 1/2" PRO-PRESS TEE X 1/2" NPT FEMALE CONNECTION, VIEGA.	2	0
		0 - 0 - 87-120042-001 SECONDARY ACTUATOR VALVE (SVA) - SINGLE ACTUATOR, REQUIRES PRIMARY RELEASE ACTUATOR, TANK FIRE SUPPRESSION.	1	0
		0 - 0 - 87-120045-001 HOSE, SECONDARY ACTUATOR HOSE, 7.5" BRAIDED STAINLESS STEEL, TANK FIRE SUPPRESSION.	1	0
		0 - 0 - 87-300001-001 TANK - PRESSURIZED TANK USED FOR TANK FIRE SUPPRESSION.	2	0
		0 - 0 - 87-300030-001 PRIMARY ACTUATOR KIT (PAK) - ACTUATOR AND RELEASE SOLENOID ASSEMBLY, ONE NEEDED PER FIRE SYSTEM, SUPERVISED, TANK FIRE SUPPRESSION.	1	0
		0 - 0 - 87-300152-001 HARDWARE, SVA BOLTS, TANK FIRE SUPPRESSION.	8	0
		0 - 0 - 98694A115 HARDWARE, DATANKLOCK LOCKING BRACKET SQUARE NUTS 5/16" ZINC, TANK FIRE SUPPRESSION.	4	0
		0 - 0 - A0034332 JUNCTION BOX FOR MANUAL PULL STATION. 1.5" DEEP BACK BOX, RED COLOR.	1	0
		0 - 0 - A31484 1/4" NPT SCHRADER VALVE AND CAP, JB INDUSTRIES. 1/4" FLARE X 1/4" MPT HALF UNION. USED ON TANK SERVICE PORT.	1	0
		0 - 0 - DATANKLOCK DISCHARGE ADAPTER TANK LOCKING PLATE FOR FIRE SYSTEM TANK INSTALLATION IN UTILITY CABINETS, TANK FIRE SUPPRESSION.	2	0
		0 - 0 - SLPCON-03FT SUPERVISED LOOP CONNECTION KIT. CONTAINS THE PARTS NEEDED TO CONNECT THE SUPERVISED LOOP BETWEEN END TO END HOODS WITH LESS THAN A 2' GAP. KIT CONTAINS 5 FEET OF BLACK MG WIRE, 5 FEET OF TAN MG WIRE, 3 FEET OF FLEXIBLE CONDUIT, AND TWO 7/8" CONNECTORS.	1	0
		0 - 0 - SLPCON-15FT SUPERVISED LOOP CONNECTION KIT. CONTAINS THE PARTS NEEDED TO CONNECT THE SUPERVISED LOOP BETWEEN END TO END HOODS WITH LESS THAN A 14' GAP OR BACK TO BACK HOODS. KIT CONTAINS 17 FEET OF BLACK MG WIRE, 17 FEET OF TAN MG WIRE, 15 FEET OF FLEXIBLE CONDUIT, AND TWO 7/8" CONNECTORS.	2	0
		0 - 0 - TANK STRAP TANK STRAP - USED FOR TANK FIRE SUPPRESSION.	6	0
		0 - 0 - TFS-UCTANKBRACKET TANK BRACKET FOR FIRE SYSTEM TANK INSTALLATION IN UTILITY CABINETS, TANK FIRE SUPPRESSION.	2	0
		0 - 0 - WK-283952-000 DISCHARGE ADAPTER, TANK FIRE SUPPRESSION.	2	0
		34 - 34 - A0034331 24VDC SINGLE ACTION MANUAL ACTUATION DEVICE (PUSH/PULL STATION) WITH PROTECTIVE COVER, ONE (1) NORMALLY OPEN CONTACT, RED COLOR.	1	0
4		0 - 0 - TANK FIRE SUPPRESSION MAINTENANCE GUIDE UTILITY CABINET LABEL SHEET.	1	0
		0 - 0 - TANK FIRE SUPPRESSION POST-DISCHARGE PROCEDURE UTILITY CABINET LABEL SHEET.	1	0
		0 - 0 - 12-F28021-32144-OT-360 DUCT FIRE THERMOSTAT WITH 12 FOOT WIRE LEADS. NO, CLOSE ON TEMP RISE AT 360°F.	2	0
		0 - 0 - 4429K153 1/2" MALE NPT TO 1/2" FEMALE NPT ELBOW, BRASS.	2	0
		0 - 0 - 4429K422 1/2" X 1/4" BRASS REDUCING BUSHING.	1	0
		0 - 0 - 79525 1/2" 90 PRO-PRESS ELBOW WITH 1/2" NPT FEMALE CONNECTION, VIEGA.	1	0
		0 - 0 - 79580 1/2" X 1/2" PRO-PRESS TEE X 1/2" NPT FEMALE CONNECTION, VIEGA.	2	0
		0 - 0 - 87-120042-001 SECONDARY ACTUATOR VALVE (SVA) - SINGLE ACTUATOR, REQUIRES PRIMARY RELEASE ACTUATOR, TANK FIRE SUPPRESSION.	1	0
		0 - 0 - 87-120045-001 HOSE, SECONDARY ACTUATOR HOSE, 7.5" BRAIDED STAINLESS STEEL, TANK FIRE SUPPRESSION.	1	0
		0 - 0 - 87-300001-001 TANK - PRESSURIZED TANK USED FOR TANK FIRE SUPPRESSION.	2	0
		0 - 0 - 87-300030-001 PRIMARY ACTUATOR KIT (PAK) - ACTUATOR AND RELEASE SOLENOID ASSEMBLY, ONE NEEDED PER FIRE SYSTEM, SUPERVISED, TANK FIRE SUPPRESSION.	1	0
		0 - 0 - 87-300152-001 HARDWARE, SVA BOLTS, TANK FIRE SUPPRESSION.	8	0
		0 - 0 - 98694A115 HARDWARE, DATANKLOCK LOCKING BRACKET SQUARE NUTS 5/16" ZINC, TANK FIRE SUPPRESSION.	4	0
		0 - 0 - A0034332 JUNCTION BOX FOR MANUAL PULL STATION. 1.5" DEEP BACK BOX, RED COLOR.	1	0
		0 - 0 - A31484 1/4" NPT SCHRADER VALVE AND CAP, JB INDUSTRIES. 1/4" FLARE X 1/4" MPT HALF UNION. USED ON TANK SERVICE PORT.	1	0
		0 - 0 - DATANKLOCK DISCHARGE ADAPTER TANK LOCKING PLATE FOR FIRE SYSTEM TANK INSTALLATION IN UTILITY CABINETS, TANK FIRE SUPPRESSION.	2	0
		0 - 0 - SLPCON-03FT SUPERVISED LOOP CONNECTION KIT. CONTAINS THE PARTS NEEDED TO CONNECT THE SUPERVISED LOOP BETWEEN END TO END HOODS WITH LESS THAN A 2' GAP. KIT CONTAINS 5 FEET OF BLACK MG WIRE, 5 FEET OF TAN MG WIRE, 3 FEET OF FLEXIBLE CONDUIT, AND TWO 7/8" CONNECTORS.	1	0
		0 - 0 - SLPCON-15FT SUPERVISED LOOP CONNECTION KIT. CONTAINS THE PARTS NEEDED TO CONNECT THE SUPERVISED LOOP BETWEEN END TO END HOODS WITH LESS THAN A 14' GAP OR BACK TO BACK HOODS. KIT CONTAINS 17 FEET OF BLACK MG WIRE, 17 FEET OF TAN MG WIRE, 15 FEET OF FLEXIBLE CONDUIT, AND TWO 7/8" CONNECTORS.	2	0
		0 - 0 - TANK STRAP TANK STRAP - USED FOR TANK FIRE SUPPRESSION.	6	0
		0 - 0 - TFS-UCTANKBRACKET TANK BRACKET FOR FIRE SYSTEM TANK INSTALLATION IN UTILITY CABINETS, TANK FIRE SUPPRESSION.	2	0
		0 - 0 - WK-283952-000 DISCHARGE ADAPTER, TANK FIRE SUPPRESSION.	2	0
		34 - 34 - A0034331 24VDC SINGLE ACTION MANUAL ACTUATION DEVICE (PUSH/PULL STATION) WITH PROTECTIVE COVER, ONE (1) NORMALLY OPEN CONTACT, RED COLOR.	1	0
5		0 - 0 - TANK FIRE SUPPRESSION MAINTENANCE GUIDE UTILITY CABINET LABEL SHEET.	1	0
		0 - 0 - TANK FIRE SUPPRESSION POST-DISCHARGE PROCEDURE UTILITY CABINET LABEL SHEET.	1	0
		0 - 0 - 12-F28021-32144-OT-360 DUCT FIRE THERMOSTAT WITH 12 FOOT WIRE LEADS. NO, CLOSE ON TEMP RISE AT 360°F.	1	0
		0 - 0 - 4429K153 1/2" MALE NPT TO 1/2" FEMALE NPT ELBOW, BRASS.	2	0
		0 - 0 - 4429K422 1/2" X 1/4" BRASS REDUCING BUSHING.	1	0
		0 - 0 - 79525 1/2" 90 PRO-PRESS ELBOW WITH 1/2" NPT FEMALE CONNECTION, VIEGA.	1	0
		0 - 0 - 79580 1/2" X 1/2" PRO-PRESS TEE X 1/2" NPT FEMALE CONNECTION, VIEGA.	2	0
		0 - 0 - 87-120042-001 SECONDARY ACTUATOR VALVE (SVA) - SINGLE ACTUATOR, REQUIRES PRIMARY RELEASE ACTUATOR, TANK FIRE SUPPRESSION.	1	0
		0 - 0 - 87-120045-001 HOSE, SECONDARY ACTUATOR HOSE, 7.5" BRAIDED STAINLESS STEEL, TANK FIRE SUPPRESSION.	1	0
		0 - 0 - 87-300001-001 TANK - PRESSURIZED TANK USED FOR TANK FIRE SUPPRESSION.	2	0
		0 - 0 - 87-300030-001 PRIMARY ACTUATOR KIT (PAK) - ACTUATOR AND RELEASE SOLENOID ASSEMBLY, ONE NEEDED PER FIRE SYSTEM, SUPERVISED, TANK FIRE SUPPRESSION.	1	0
		0 - 0 - 87-300152-001 HARDWARE, SVA BOLTS, TANK FIRE SUPPRESSION.	8	0
		0 - 0 - 98694A115 HARDWARE, DATANKLOCK LOCKING BRACKET SQUARE NUTS 5/16" ZINC, TANK FIRE SUPPRESSION.	4	0
		0 - 0 - A0034332 JUNCTION BOX FOR MANUAL PULL STATION. 1.5" DEEP BACK BOX, RED COLOR.	1	0
		0 - 0 - A31484 1/4" NPT SCHRADER VALVE AND CAP, JB INDUSTRIES. 1/4" FLARE X 1/4" MPT HALF UNION. USED ON TANK SERVICE PORT.	1	0
		0 - 0 - DATANKLOCK DISCHARGE ADAPTER TANK LOCKING PLATE FOR FIRE SYSTEM TANK INSTALLATION IN UTILITY CABINETS, TANK FIRE SUPPRESSION.	2	0
		0 - 0 - TANK STRAP TANK STRAP - USED FOR TANK FIRE SUPPRESSION.	6	0
		0 - 0 - TFS-UCTANKBRACKET TANK BRACKET FOR FIRE SYSTEM TANK INSTALLATION IN UTILITY CABINETS, TANK FIRE SUPPRESSION.	2	0
		0 - 0 - WK-283952-000 DISCHARGE ADAPTER, TANK FIRE SUPPRESSION.	2	0
		34 - 34 - A0034331 24VDC SINGLE ACTION MANUAL ACTUATION DEVICE (PUSH/PULL STATION) WITH PROTECTIVE COVER, ONE (1) NORMALLY OPEN CONTACT, RED COLOR.	1	0
		ADDITIONAL PARTS TO BE DETERMINED...		

C:\Users\bcastelli\Documents\WPSD2203_Central21_M_bcastelli7RBCQ.rvt

3/21/2025 5:09:47 PM

H2M architects + engineers

538 Broad Hollow Road, 4th Floor East
Melville, NY 11747
631.756.8000 ▪ www.h2m.com
Land Surveying Certificate of Authorization No.: 0018178
Engineering Certificate of Authorization No.: 0018438

CONSULTANTS:

MARK	DATE	DESCRIPTION

STATE OF NEW YORK · BRIAN CASTELLI · 099167 · LICENSED PROFESSIONAL ENGINEER

DESIGNED BY:	DRAWN BY:	CHECKED BY:	REVIEWED BY:
RVS	RVS	BMC	
PROJECT No: WPSD2203	DATE: FEBRUARY 2025	SCALE: AS SHOWN	

CLIENT

WHITE PLAINS CITY SCHOOL DISTRICT

HIGH SCHOOL ADDITION

66-22-00-01-0-016-030

CONTRACT

CONTRACT M

STATUS

FINAL BID DOCUMENT

SHEET TITLE

HVAC
BUILDING
KITCHEN DETAILS SHEET 4 OF 15

DRAWING No.

M 503.00

EXHAUST FAN INFORMATION - JOB#5927219

FAN UNIT NO	TAG	QTY	FAN UNIT MODEL #	MANUFACTURER	CFM	ESP	RPM	MOTOR ENCL	HP	BHP	PHASE	VOLT	FLA	DISCHARGE VELOCITY	WEIGHT (LBS)	SONES
1		1	DU200HFA	CAPTIVEAIRE	3200	2.000	1341	ODP,PREMIUM	5.000	2.3820	3	208	15.0	779 FPM	214	27.7
2		1	DU240HFA	CAPTIVEAIRE	5000	2.500	1138	ODP,PREMIUM	5.000	4.1600	3	208	15.8	1136 FPM	308	29.3

CONDENSER DETAILS

FAN UNIT NO	TAG	FAN UNIT MODEL #	CONDENSER NO	TONNAGE	VOLTAGE	PHASE	FREQUENCY	MCA	RLA	MAX FUSE SIZE	MIN WIRE SIZE	SEER
3		A3-E.1434-24D-MPU	1	5	460	3 PHASE	60 HZ	10.5 AMPS	8.5 AMPS	15 AMPS	14 AWG	14
			2	5	460	3 PHASE	60 HZ	10.5 AMPS	8.5 AMPS	15 AMPS	14 AWG	14
			3	5	460	3 PHASE	60 HZ	10.5 AMPS	8.5 AMPS	15 AMPS	14 AWG	14

MUA FAN INFORMATION - JOB#5927219

FAN UNIT NO	TAG	QTY	FAN UNIT MODEL #	BLOWER	HOUSING	MIN CFM	DESIGN CFM	ESP	RPM	MOTOR ENCL	HP	BHP	PHASE	VOLT	FLA	MCA	MOCP	WEIGHT (LBS)	SONES
3		1	A3-E.1434-24D-MPU	24MF-3-MOD	A3-E.1434	5400	6560	0.750	1588	ODP,PREMIUM	10.000	7.8380	3	460	12.2	15.3A	25A	2383	16.1

COILS - JOB#5927219

FAN UNIT NO	TAG	COIL TYPE	DESIGN CFM	COOLING											HEATING								
				ENTERING DB TEMP	ENTERING WB TEMP	LEAVING DB TEMP	LEAVING WB TEMP	ENTERING FLUID TEMP	LEAVING FLUID TEMP	FLUID FLOW RATE	PERCENT GLYCOL	TOTAL CAPACITY	SENSIBLE CAPACITY	LATENT CAPACITY	ENTERING DB TEMP	LEAVING DB TEMP	ENTERING FLUID TEMP	LEAVING FLUID TEMP	FLUID FLOW RATE	PERCENT GLYCOL	STEAM PRESSURE	TOTAL CAPACITY	SENSIBLE CAPACITY
3		DX	6560	87.0°F	72.0°F	71.8°F	65.3°F	---	---	---	---	152.9 MBH	105.3 MBH	47.6 MBH	---	---	---	---	---	---	---	---	---

DOAS/RTU FAN SCHEDULE - JOB#5927219

FAN UNIT NO	TAG	QTY	DOAS/RTU MODEL #	MANUFACTURER	BLOWER	RETURN AIR CFM	MAX OUTSIDE AIR CFM	TOTAL CFM	WEIGHT (LBS)	ESP
FAN INFORMATION										
4		1	CASRTU1-E.454-13-7.5T	CAPTIVEAIRE	13P-1	0	1640	1640	1306	0.500

FAN UNIT NO	ELECTRICAL INFORMATION: HP	PHASE	VOLT	MCA	MOCP
4	1.50	3	460	15.1A	20A

FAN UNIT NO	COOLING INFORMATION: OUTSIDE AIR DB	OUTSIDE AIR WB	MIXED AIR DB	MIXED AIR WB	LEAVING AIR DB	LEAVING AIR WB	LEAVING AIR DP	CAPACITY TOTAL	CAPACITY SENS.	IEER	ISMRE
4	79.8°F	75.2°F	79.8°F	75.2°F	57.5°F	56.9°F	56.6°F	102.0 MBH	39.1 MBH	18.6	12.2

FAN UNIT NO	REHEAT INFORMATION: DISCHARGE DB	DISCHARGE WB	CAPACITY DESIRED	CAPACITY MAX	MOISTURE REMOVAL RATE
4	70.0°F	62.0°F	22.7 MBH	60 MBH	56.8 LBS/HR

FAN UNIT NO	ELECTRIC HEAT INFORMATION: DSGN. KW'S	MAX. KW'S	VOLTS	AMPS	TEMP RISE	HEAT PUMP INFORMATION: ENTERING TEMP	MAX TEMP RISE	DISCHARGE TEMP	COP	NOTES
4	32	45	460	54.2	63 °F	50.0°F	31.0°F	81.0°F	5.4	1,2,3,4,5,6,7,8,9,10,11,12,13

NOTES:
1. INVERTER SCROLL COMPRESSOR WITH INTEGRATED OIL SENSOR. DIGITAL OR STAGED SCROLL NOT AN APPROVED EQUAL
2. DIRECT DRIVE PLENUM BLOWER. BELT DRIVEN BLOWERS ARE NOT ACCEPTABLE
3. INTEGRATED MONITORING VIA CELLULAR CONNECTION BY MANUFACTURER
4. REFRIGERATION PRESSURE MONITORING ON HIGH AND LOW PRESSURE SIDE OF SYSTEM INCLUDED THROUGH DIGITAL INTERFACE
5. EC MOTOR CONDENSING FANS
6. ELECTRONIC EXPANSION VALVE. TXV NOT ACCEPTABLE
7. SUCTION LINE ACCUMULATOR
8. FACTORY COMMISSIONING WITH 5 YEAR PARTS WARRANTY
9. AVERAGING INTAKE, EVAP AND DISCHARGE TEMPERATURE SENSORS (DISCHARGE SENSOR TO BE FACTORY MOUNTED WITHIN UNIT)
10. SUPPLY CFM MONITORING INTEGRAL TO UNIT WITH CFM MEASUREMENT INCLUDED THROUGH DIGITAL INTERFACE
11. FULLY MODULATING HOT GAS REHEAT
12. 1" EXTERIOR DUAL-WALL CONSTRUCTION W/ R-4.3 INSULATION-MINIMUM 24GA EXTERIOR W/ 18GA BASE
13. DOWN DISCHARGE/DOWN RETURN

ELECTRIC MAKE-UP AIR UNIT(S)

FAN UNIT NO	TAG	DSGN KW'S	MAX KW'S	PHASE	VOLTS	AMPERAGE	TEMP RISE	OUTPUT BTUs
3		128	143	3	460	172.0	63 °F	488059

FAN OPTIONS

FAN UNIT NO	TAG	QTY	DESCRIPTION
1		1	GREASE BOX
		1	2 YEAR PARTS WARRANTY
2		1	GREASE BOX
		1	2 YEAR PARTS WARRANTY
3		1	EH 3 MUA CONTROLS SHEET METAL
		1	MOTORIZED BACKDRAFT DAMPER FOR A3-D HOUSING - MEETS AMCA CLASS 1A RATING
		1	15 TON 3 CIRCUIT (5/5/5) MODULAR PACKAGED COOLING OPTION FOR SIZE 3 DF/EH MUA (5,400 TO 7,000 CFM), 460V, 3 PHASE. COOLING THERMOSTAT OR PROGRAMMABLE STAT REQUIRED FOR PROPER OPERATION
		1	DOWNTURN PLENUM FOR SIZE 3 DX COIL MODULE
		1	MIXING BOX SHELL FOR SIZE 3, 15 TON MOD PACKAGE UNIT CONDENSER SUPPORT
		1	LOAD REACTOR MOUNTED IN FAN
		1	SEPARATE 120V WIRING PACKAGE (REQUIRED AND USED ONLY FOR DCV OR PREWIRE WITH VFD) - THREE PHASE ONLY
		1	2 YEAR PARTS WARRANTY
4		1	RTU TOTAL CFM MONITORING
		1	SEPARATE ELECTRIC HEAT CONNECTION - RTU. 750VA TRANSFORMER USED FOR CONTROLS. TWO PRIMARY CONNECTIONS REQUIRED FOR RTU WITH ELECTRIC HEAT. IF A NON-DCV PREWIRE CONTROLS THIS UNIT, THE #28, #47, "MA", OR "E2" PREWIRE OPTION MUST BE SELECTED. DO NOT PROVIDE SUPPLY STARTER IN PREWIRE
		1	CASLINK BUILDING MONITORING SYSTEM - INTERNET OR CELLULAR CONNECTION REQUIRED
		1	2" MERV 13 FILTERS FOR RTU1 (QTY. 4)
		1	2" MERV 8 FILTERS FOR RTU1 (QTY. 4)
		1	OVERHEAT STAT
		1	VFD FACTORY MOUNTED AND WIRED IN RTU COMMERCIAL CONTROL VESTIBULE
		1	RTU1 DOWN DISCHARGE ELECTRIC HEAT, 10-45KW
		1	REMOTE TEMPERATURE AND HUMIDITY SPACE SENSOR
		1	RTU1 CURB DUCT HANGER
		1	COMMERCIAL SMOKE DETECTOR/ALARM INTERLOCK - ALARM SUPPLIED BY OTHERS
		1	7.5 TON MODULATING COOLING OPTION WITH HEAT PUMP, 460/480V. R410A REFRIGERANT, VARIABLE SPEED COMPRESSOR, ECM CONDENSING FANS
		1	7.5 TON MODULATING REHEAT OPTION WITH HEAT PUMP - SPACE DEWPOINT CONTROL
		1	RTU INTAKE/RETURN DAMPER - MANUAL CONTROL VIA HMI
		1	RTU1 DOWN RETURN
		1	VAV PACKAGE W/ 0-10VDC INPUT CONTROL (571 VFD INCLUDED)
		1	LOAD REACTOR MOUNTED IN FAN
		1	5 YEAR ENTIRE UNIT PARTS WARRANTY, 10 YEAR ENTIRE UNIT PARTS WARRANTY WITH REMOTE MONITORING AND CAPTIVEAIRE SERVICE CONTRACT

FAN ACCESSORIES

FAN UNIT NO	TAG	EXHAUST: GREASE CUP	EXHAUST: GRAVITY DAMPER	EXHAUST: WALL MOUNT	SUPPLY: SIDE DISCHARGE	SUPPLY: GRAVITY DAMPER	SUPPLY: MOTORIZED DAMPER	SUPPLY: WALL MOUNT
1		YES						
2		YES						
3							YES	

CURB ASSEMBLIES

NO	ON FAN	WEIGHT	ITEM	SIZE
1	# 1	41 LBS	CURB	26.500"W X 26.500"L X 20.000"H ALONG LENGTH, RIGHT VENTED HINGED.
2	# 2	48 LBS	CURB	31.500"W X 31.500"L X 20.000"H ALONG LENGTH, RIGHT VENTED HINGED.
3	# 3	144 LBS	CURB	35.000"W X 84.000"L X 20.000"H ALONG WIDTH, RIGHT INSULATED.
	# 3		RAIL	6.000"W X 35.000"L X 20.000"H RIGHT.
	# 3		RAIL	6.000"W X 35.000"L X 20.000"H RIGHT.
4	# 4	103 LBS	CURB	41.000"W X 71.000"L X 20.000"H ALONG WIDTH, RIGHT INSULATED.

FAN #1 DU200HFA - EXHAUST FAN

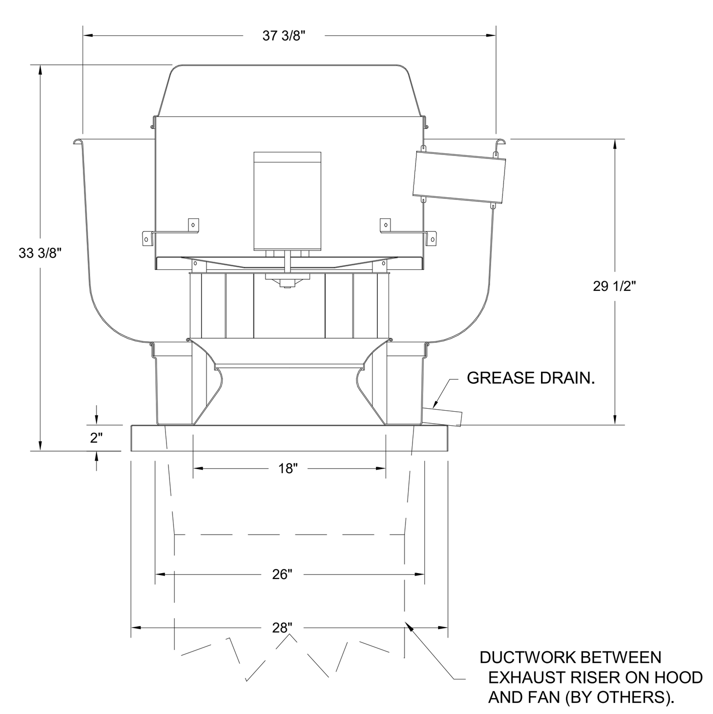

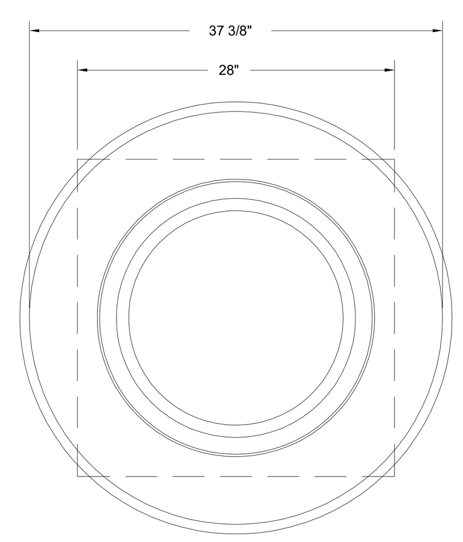

TOP VIEW

FEATURES:

- DIRECT DRIVE CONSTRUCTION (NO BELTS/PULLEYS).
- ROOF MOUNTED FANS.
- RESTAURANT MODEL.
- UL705 AND UL762 AND ULC-S645
- VARIABLE SPEED CONTROL.
- INTERNAL WIRING.
- THERMAL OVERLOAD PROTECTION (SINGLE PHASE).
- HIGH HEAT OPERATION 300°F (149°C).
- GREASE CLASSIFICATION TESTING.
- NEMA 3R SAFETY DISCONNECT SWITCH.

NORMAL TEMPERATURE TEST
EXHAUST FAN MUST OPERATE CONTINUOUSLY WHILE EXHAUSTING AIR AT 300°F (149°C) UNTIL ALL FAN PARTS HAVE REACHED THERMAL EQUILIBRIUM, AND WITHOUT ANY DETERIORATING EFFECTS TO THE FAN WHICH WOULD CAUSE UNSAFE OPERATION.

ABNORMAL FLARE-UP TEST
EXHAUST FAN MUST OPERATE CONTINUOUSLY WHILE EXHAUSTING BURNING GREASE VAPORS AT 600°F (316°C) FOR A PERIOD OF 15 MINUTES WITHOUT THE FAN BECOMING DAMAGED TO ANY EXTENT THAT COULD CAUSE AN UNSAFE CONDITION.

OPTIONS
- GREASE BOX.
- 2 YEAR PARTS WARRANTY.

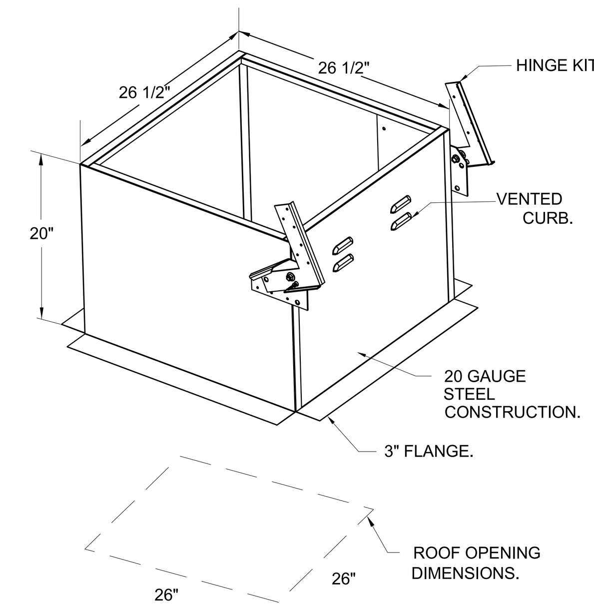

Exhaust Fan Wiring

JOB: 5927219 - White Plains High School
DRAWING NUMBER: EXH5927219-1 | SHIP DATE: 3/30/2023 | MODEL: DU200HFA

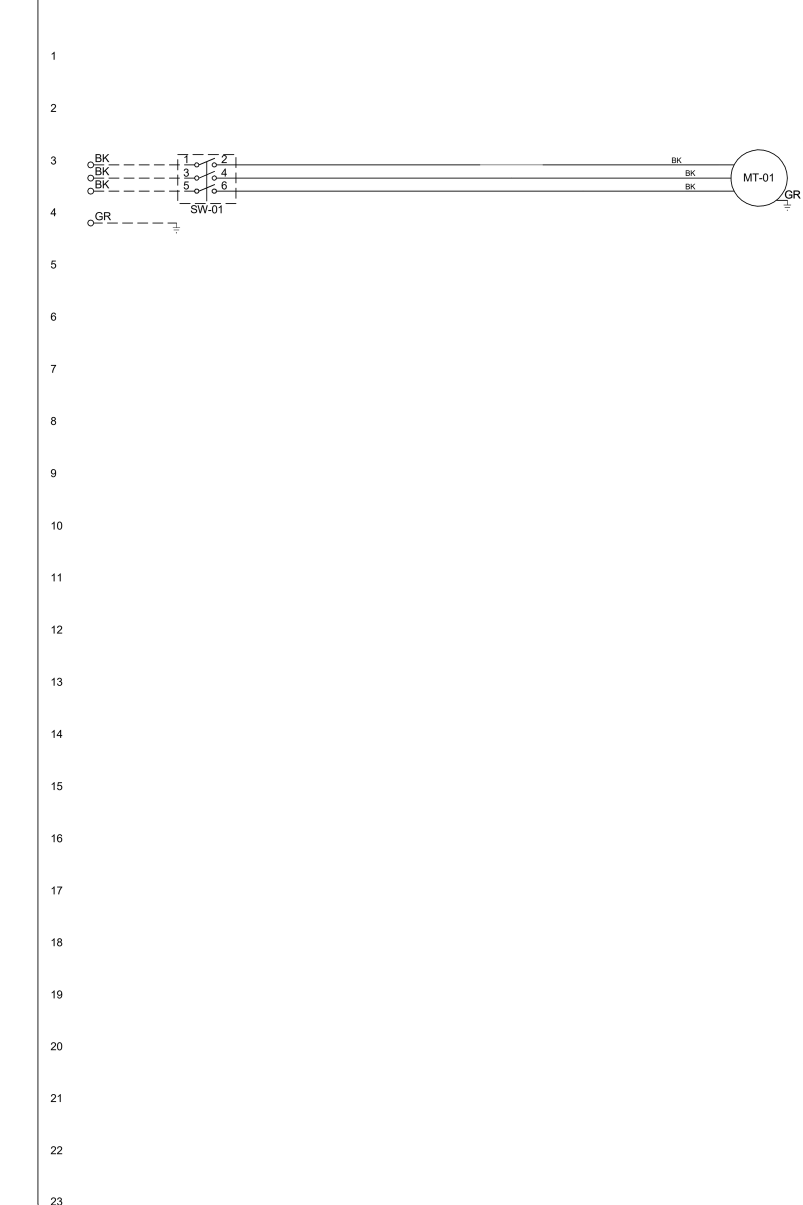

Installed Options

Component Identification

Label	Description	Location
MT-01	Fan Motor	[3]
SW-01	Main disconnect switch	[3]

MOTOR INFO
EXHAUST 5HP-208V-3P-15.0FLA
VFD PART: ESV402N02TXB571

ELECTRICAL INFORMATION
MOTOR/CTRL MCA: 18.8A
MOTOR/CTRL MOP: 30A

NOTES
– – – – DENOTES FIELD WIRING
——— DENOTES INTERNAL WIRING

WIRE COLOR
BK - BLACK, BL - BLUE, BR - BROWN, OR - ORANGE, RD - RED, WH - WHITE
YW - YELLOW, GR - GREEN, GY - GRAY, PR - PURPLE, PK - PINK

H2M architects + engineers
538 Broad Hollow Road, 4th Floor East
Melville, NY 11747
631.756.8000 • www.h2m.com

Land Surveying Certificate of Authorization No.: 0018178
Engineering Certificate of Authorization No.: 0018438

CONSULTANTS:

MARK	DATE	DESCRIPTION

STATE OF NEW YORK BRIAN CASTELLI 099167 LICENSED PROFESSIONAL ENGINEER

DESIGNED BY:	DRAWN BY:	CHECKED BY:	REVIEWED BY:
RVS	RVS	BMC	
PROJECT No: WPSD2203	DATE: FEBRUARY 2025	SCALE: AS SHOWN	

CLIENT
WHITE PLAINS CITY SCHOOL DISTRICT

HIGH SCHOOL ADDITION

66-22-00-01-0-016-030

CONTRACT: CONTRACT M

STATUS: FINAL BID DOCUMENT

SHEET TITLE: KITCHEN DETAILS SHEET 5 OF 15

DRAWING No. **M 504.00**

C:\Users\bcastelli\Documents\WPSD2203_Central21_M_bcastelli7RBCQ.rvt
3/21/2025 5:09:48 PM

FAN #2 DU240HFA - EXHAUST FAN

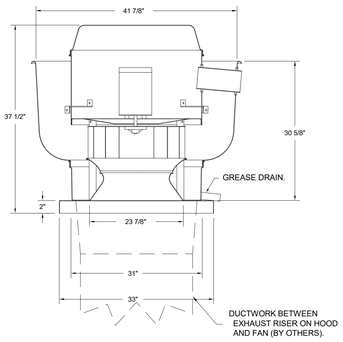

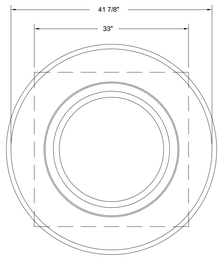

TOP VIEW

FEATURES:

- DIRECT DRIVE CONSTRUCTION (NO BELTS/PULLEYS).
- ROOF MOUNTED FANS.
- RESTAURANT MODEL.
- UL705 AND UL762 AND ULC-S645
- VARIABLE SPEED CONTROL.
- INTERNAL WIRING.
- THERMAL OVERLOAD PROTECTION (SINGLE PHASE).
- HIGH HEAT OPERATION 300°F (149°C).
- GREASE CLASSIFICATION TESTING.
- NEMA 3R SAFETY DISCONNECT SWITCH.

NORMAL TEMPERATURE TEST
EXHAUST FAN MUST OPERATE CONTINUOUSLY WHILE EXHAUSTING AIR AT 300°F (149°C) UNTIL ALL FAN PARTS HAVE REACHED THERMAL EQUILIBRIUM, AND WITHOUT ANY DETERIORATING EFFECTS TO THE FAN WHICH WOULD CAUSE UNSAFE OPERATION.

ABNORMAL FLARE-UP TEST
EXHAUST FAN MUST OPERATE CONTINUOUSLY WHILE EXHAUSTING BURNING GREASE VAPORS AT 600°F (316°C) FOR A PERIOD OF 15 MINUTES WITHOUT THE FAN BECOMING DAMAGED TO ANY EXTENT THAT COULD CAUSE AN UNSAFE CONDITION.

OPTIONS

- GREASE BOX.
- 2 YEAR PARTS WARRANTY.

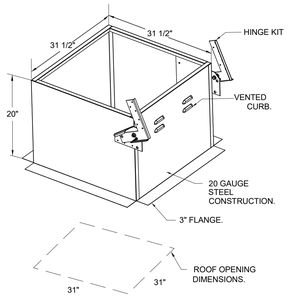

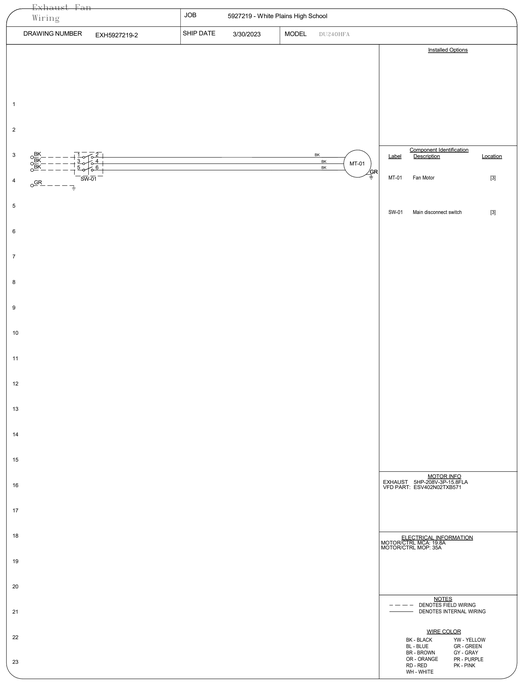

H2M architects + engineers

538 Broad Hollow Road, 4th Floor East
Melville, NY 11747
631.756.8000 • www.h2m.com
Land Surveying Certificate of Authorization No.: 0018178
Engineering Certificate of Authorization No.: 0018438

CONSULTANTS:

MARK	DATE	DESCRIPTION

DESIGNED BY:	DRAWN BY:	CHECKED BY:	REVIEWED BY:
RVS	RVS	BMC	
PROJECT No:	DATE:	SCALE:	
WPSD2203	FEBRUARY 2025	AS SHOWN	

CLIENT

WHITE PLAINS CITY SCHOOL DISTRICT

HIGH SCHOOL ADDITION

66-22-00-01-0-016-030

CONTRACT

CONTRACT M

STATUS

FINAL BID DOCUMENT

SHEET TITLE

HVAC
BUILDING
KITCHEN DETAILS SHEET 6 OF 15

DRAWING No.

M 505.00

C:\Users\bcastelli\Documents\WPSD2203_Central21_M_bcastelli7RBCQ.rvt
3/21/2025 5:09:48 PM

MAU-1
FAN #3 A3-E.1434-24D-MPU - HEATER
1. ELECTRIC HEATED MAKE UP AIR UNIT WITH 24" MIXED FLOW DIRECT DRIVE FAN AND A 4 STAGE TOTAL, 1 MODULATING, 143KW 480 - 3 COIL.
2. INTAKE HOOD WITH EZ FILTERS.
3. DOWN DISCHARGE - AIR FLOW RIGHT -> LEFT.
4. SIZE 3 ELECTRIC HEATER WITH MUA CONTROLS SHEET METAL.
5. MOTORIZED BACK DRAFT DAMPER 30" X 30" FOR SIZE 3 STANDARD & MODULAR HEATER UNITS W/EXTENDED SHAFT, STANDARD GALVANIZED CONSTRUCTION, 3/4" REAR FLANGE, LOW LEAKAGE. NFBUP-S ACTUATOR INCLUDED.
6. 15 TON, 3 CIRCUIT (5/5/5) MODULAR PACKAGED COOLING OPTION FOR SIZE 3 DF/EH MODULAR PACKAGED UNIT. INCLUDES CONDENSER, DX COIL, FILTER/DRYER KIT, HARD START KIT, THERMAL EXPANSION VALVE, R410A REFRIGERANT, AND REFRIGERANT PIPING. (5,400 TO 7,000 CFM) WHEN ORDERED WITH OPPOSITE AIRFLOW CONDENSERS ACCESS AND COIL PIPING WILL REMAIN IN STANDARD POSITION. DRAIN AND SLEDS WILL MOVE TO THE OPPOSITE SIDE. ANY OTHER CHANGE WILL REQUIRE CLI. CONDENSERS REQUIRE SEPARATE 460V, 3 PHASE POWER SUPPLY UNLESS ORDERED WITH SINGLE POINT CONNECTION. COIL = 3EZ1002B.
7. DOWNTURN PLENUM FOR SIZE 3 COOLING COIL MODULE - REQUIRED FOR DOWN DISCHARGE COOLING COIL APPLICATIONS.
8. SUPPORT SHELL FOR SIZE 3 MODULAR PACKAGE UNIT FOR THIRD CONDENSER. INCLUDES CONTROL VESTIBULE. INCLUDES CONDENSER SUPPORTS. DOES NOT INCLUDE RETURN AIR OR INLET AIR DAMPER.
9. MOUNT LOAD REACTOR IN FAN.
10. SEPARATE 120VAC WIRING PACKAGE FOR MAKE-UP AIR UNITS. OPTION MUST BE SELECTED WHEN MOUNTING VFD IN PREWIRE PANEL OR WITH DCV PACKAGE. PROVIDES SEPARATE 120VAC INPUT TO SUPPLY FAN. THIS 120V SIGNAL MUST BE RUN BY ELECTRICIAN FROM DCV TO MUA SWITCH.
11. 2 YEAR PARTS WARRANTY

*NOTE: SUPPLY DUCT MUST BE INSTALLED TO MEET SMACNA STANDARDS. A MINIMUM STRAIGHT DUCT LENGTH MUST BE MAINTAINED DOWNSTREAM OF UNIT DISCHARGE AS OUTLINED IN AMCA PUBLICATION 201. WHEN USING RECTANGULAR DUCTWORK, ELBOWS MUST BE RADIUS THROAT, RADIUS BACK WITH TURNING VANES. FLEXIBLE DUCTWORK AND SQUARE THROAT/SQUARE BACK ELBOWS SHOULD NOT BE USED. ANY TRANSITION AND/OR TURNS IN THE DUCTWORK WILL CAUSE SYSTEM EFFECT. SYSTEM EFFECT WILL DRASTICALLY INCREASE STATIC PRESSURE AND REDUCE AIRFLOW. DO NOT RELY ON UNIT TO SUPPORT DUCT IN ANY WAY. FAILURE TO PROPERLY SIZE DUCTWORK MAY CAUSE SYSTEM EFFECTS AND REDUCE PERFORMANCE OF THE EQUIPMENT.
SUGGESTED STRAIGHT DUCT SIZE IS 24" x 24".

LISTED

SUPPLY SIDE HEATER INFORMATION:

WINTER TEMPERATURE = 12°F.
TEMP. RISE = 63°F.
KWs CALCULATED OFF ACTUAL AIR DENSITY.
KWs AT
ALTITUDE OF 0.0 FT. = 129.
KWs AT ALTITUDE OF 274 FT. = 128.

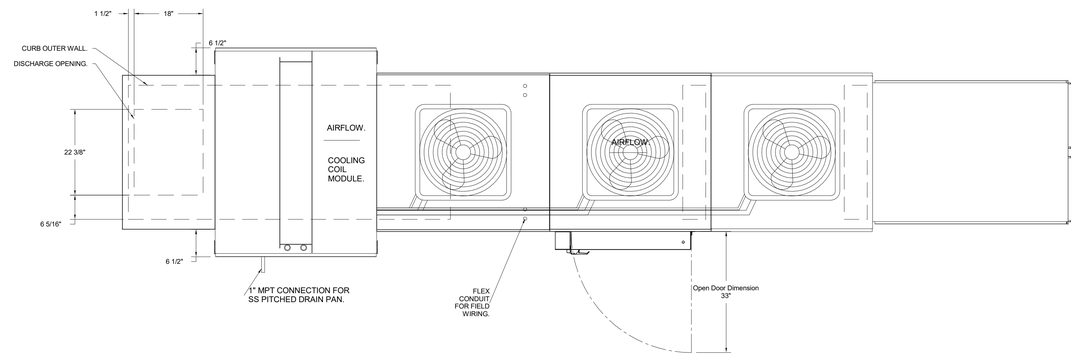

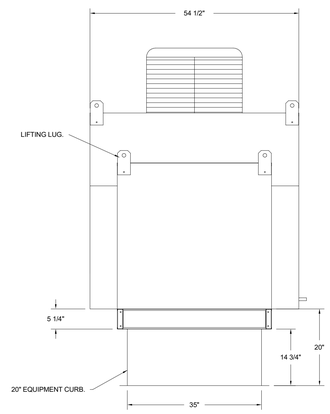

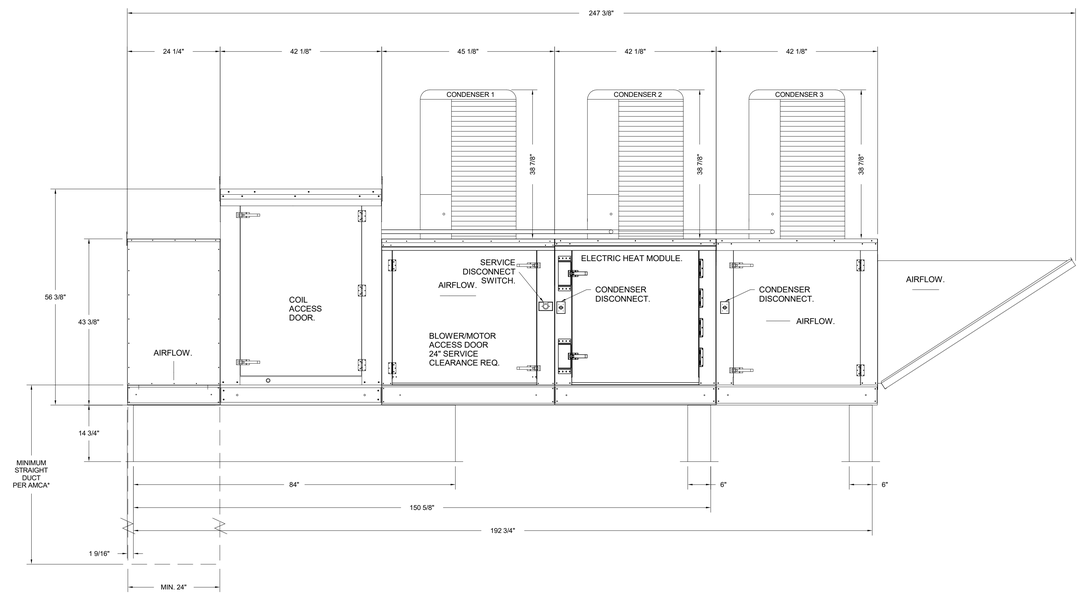

TYPICAL DRAIN TRAP INSTALL

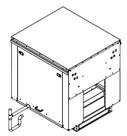

RECOMMENDED COOLING COIL DRAIN TRAP CONFIGURATION.

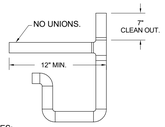

NOTES:
1) 1" DIAMETER PVC PIPE ONLY.
2) USE ONLY LOW PROFILE COUPLINGS.
3) ADD CLEAN OUT AS SHOWN.

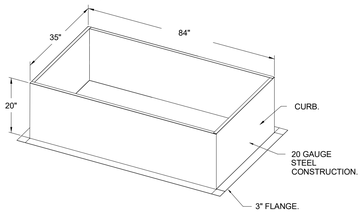

C:\Users\bcastelli\Documents\WPSD2203_Central21_M_bcastelli78BCQ.rvt

3/21/2025 5:09:49 PM

H 2 M architects + engineers

538 Broad Hollow Road, 4th Floor East
Melville, NY 11747
631.756.8000 • www.h2m.com
Land Surveying Certificate of Authorization No.: 0018178
Engineering Certificate of Authorization No.: 0018438

CONSULTANTS:

MARK	DATE	DESCRIPTION

STATE OF NEW YORK · BRIAN CASTELLI · 099167 · LICENSED PROFESSIONAL ENGINEER

DESIGNED BY:	DRAWN BY:	CHECKED BY:	REVIEWED BY:
RVS	RVS	BMC	
PROJECT No: WPSD2203	DATE: FEBRUARY 2025	SCALE: AS SHOWN	

CLIENT
WHITE PLAINS CITY SCHOOL DISTRICT

HIGH SCHOOL ADDITION

White Plains Public Schools · WP · REAL LIFE LEARNING

66-22-00-01-0-016-030

CONTRACT
CONTRACT M

STATUS
FINAL BID DOCUMENT

SHEET TITLE
HVAC BUILDING KITCHEN DETAILS SHEET 7 0F 15

DRAWING No.
M 506.00

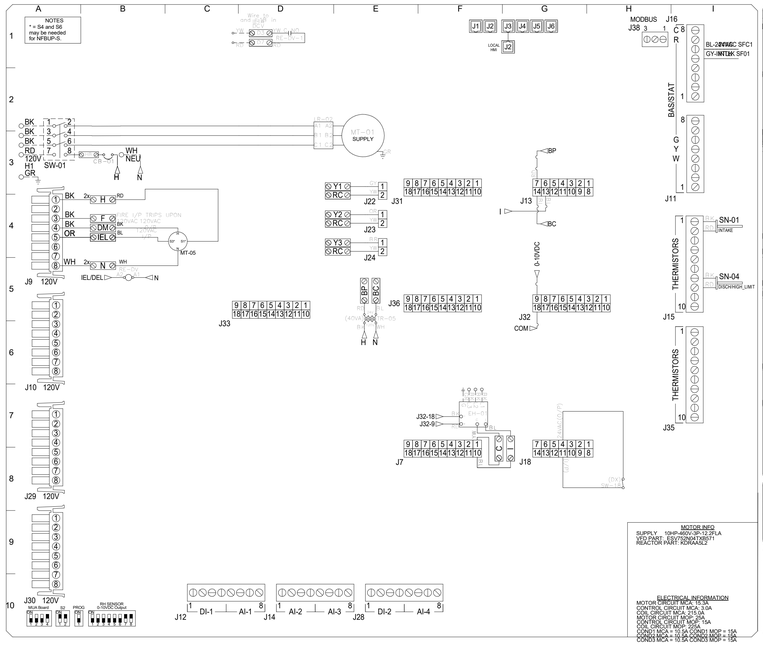

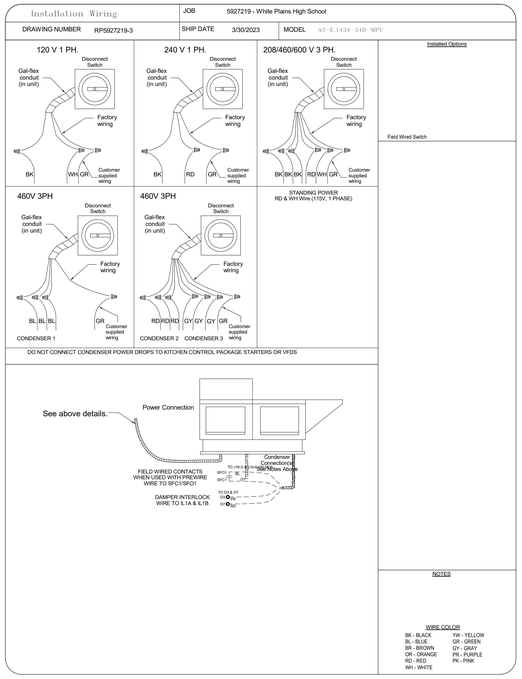

H2M architects + engineers
538 Broad Hollow Road, 4th Floor East
Melville, NY 11747
631.756.8000 • www.h2m.com
Land Surveying Certificate of Authorization No.: 0018178
Engineering Certificate of Authorization No.: 0018438

CONSULTANTS:

MARK	DATE	DESCRIPTION

STATE OF NEW YORK · BRIAN CASTELLI · 099167 · LICENSED PROFESSIONAL ENGINEER

DESIGNED BY:	DRAWN BY:	CHECKED BY:	REVIEWED BY:
RVS	RVS	BMC	-
PROJECT No: WPSD2203	DATE: FEBRUARY 2025	SCALE: AS SHOWN	

CLIENT

WHITE PLAINS CITY SCHOOL DISTRICT

HIGH SCHOOL ADDITION

White Plains Public Schools · REAL LIFE LEARNING

66-22-00-01-0-016-030

CONTRACT

CONTRACT M

STATUS

FINAL BID DOCUMENT

SHEET TITLE

HVAC BUILDING KITCHEN DETAILS SHEET 8 OF 15

DRAWING No.

M 507.00

C:\Users\bcastelli\Documents\WPSD2203_Central21_M_bcastelliRVBSCQ.rvt

3/21/2025 5:09:49 PM

FAN #4 CASRTU1-E.454-13-7.5T - HEATER

MAU-2

NOTES:

1. DO NOT OBSTRUCT OUTSIDE AIR INLET, OUTSIDE AIR COIL OR OUTSIDE AIR FAN.
2. ( ) DENOTES CORNER WEIGHT.
3. ROOF OPENING MUST BE 2" SMALLER THAN CURB DIMENSIONS IN BOTH DIRECTIONS.

*NOTE: SUPPLY DUCT MUST BE INSTALLED TO MEET SMACNA STANDARDS. A MINIMUM STRAIGHT DUCT LENGTH MUST BE MAINTAINED DOWNSTREAM OF UNIT DISCHARGE AS OUTLINED IN AMCA PUBLICATION 201. WHEN USING RECTANGULAR DUCTWORK, ELBOWS MUST BE RADIUS THROAT, RADIUS BACK WITH TURNING VANES. FLEXIBLE DUCTWORK AND SQUARE THROAT/SQUARE BACK ELBOWS SHOULD NOT BE USED. ANY TRANSITION AND/OR TURNS IN THE DUCTWORK WILL CAUSE SYSTEM EFFECT. SYSTEM EFFECT WILL DRASTICALLY INCREASE STATIC PRESSURE AND REDUCE AIRFLOW. DO NOT RELY ON UNIT TO SUPPORT DUCT IN ANY WAY. FAILURE TO PROPERLY SIZE DUCTWORK MAY CAUSE SYSTEM EFFECTS AND REDUCE PERFORMANCE OF THE EQUIPMENT.
SUGGESTED STRAIGHT DUCT SIZE IS 20.75" x 21.5".

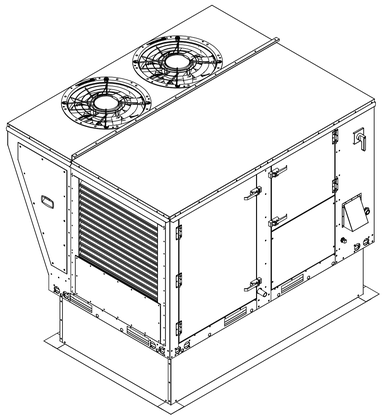

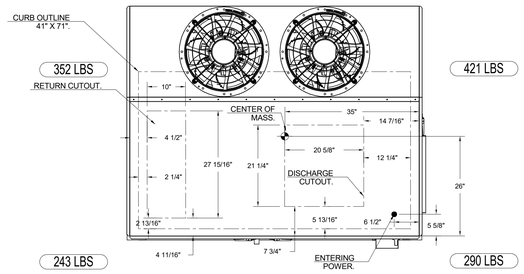

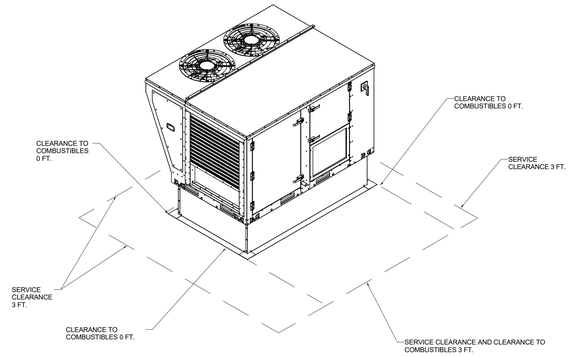

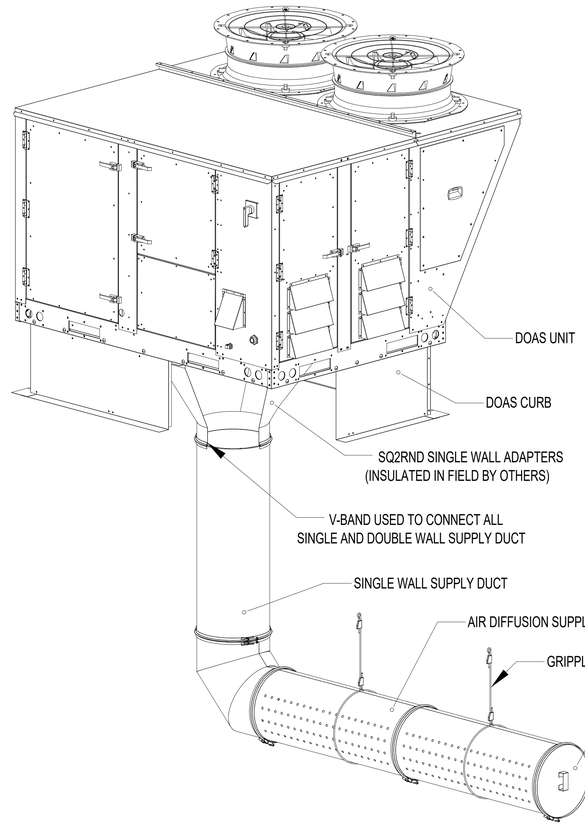

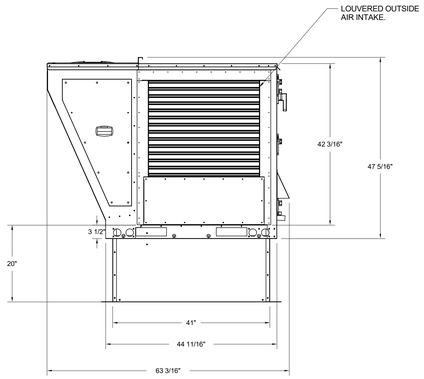

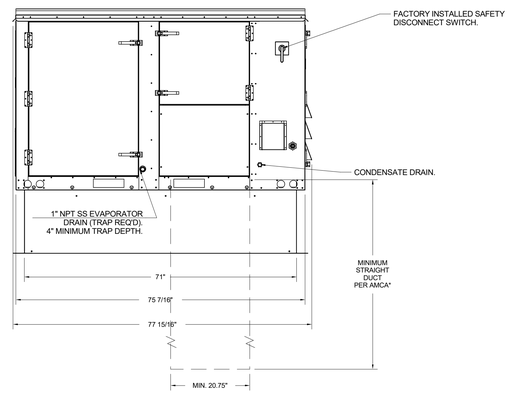

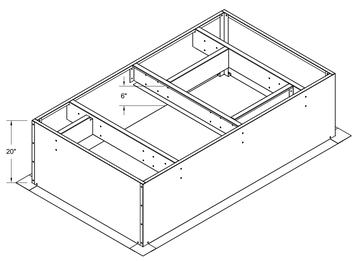

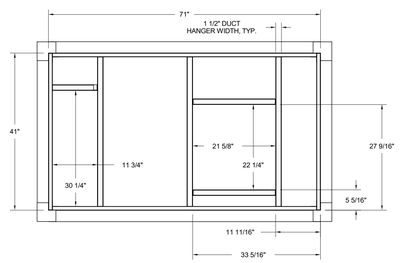

H 2 M architects + engineers

538 Broad Hollow Road, 4th Floor East
Melville, NY 11747
631.756.8000 • www.h2m.com
Land Surveying Certificate of Authorization No.: 0018178
Engineering Certificate of Authorization No.: 0018438

CONSULTANTS:

MARK	DATE	DESCRIPTION

STATE OF NEW YORK · BRIAN CASTELLI · 099167 · LICENSED PROFESSIONAL ENGINEER

DESIGNED BY:	DRAWN BY:	CHECKED BY:	REVIEWED BY:
RVS	RVS	BMC	-
PROJECT No: WPSD2203	DATE: FEBRUARY 2025	SCALE: AS SHOWN	

CLIENT

WHITE PLAINS CITY SCHOOL DISTRICT

HIGH SCHOOL ADDITION

White Plains Public Schools · WP · REAL LIFE LEARNING

66-22-00-01-0-016-030

CONTRACT

CONTRACT M

STATUS

FINAL BID DOCUMENT

SHEET TITLE

HVAC BUILDING KITCHEN DETAILS SHEET 9 OF 15

DRAWING No.

M 508.00

C:\Users\bcastelli\Documents\WPSD2203_Central21_M_bcastelli7R9CQ.rvt
3/21/2025 5:09:50 PM

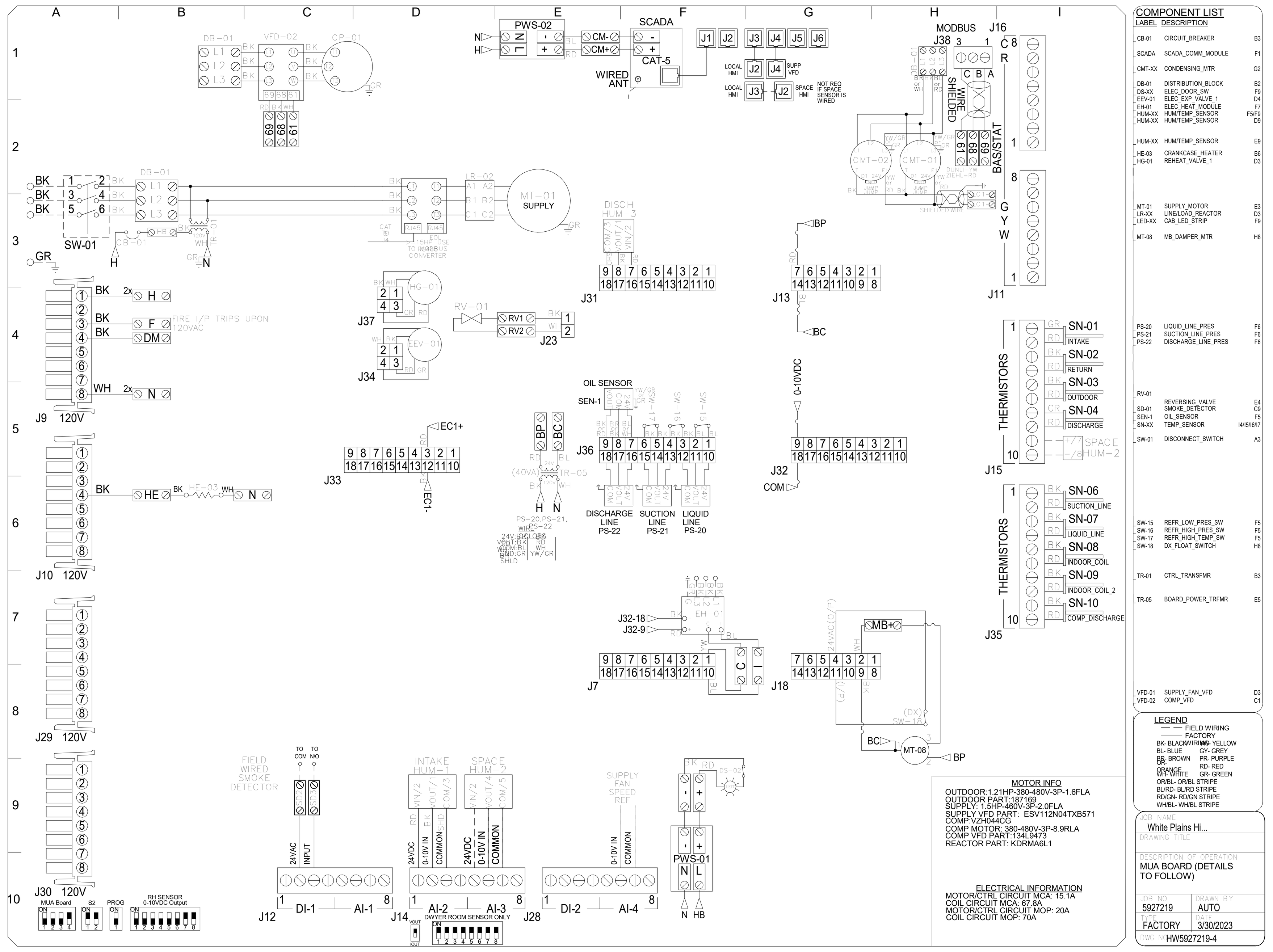

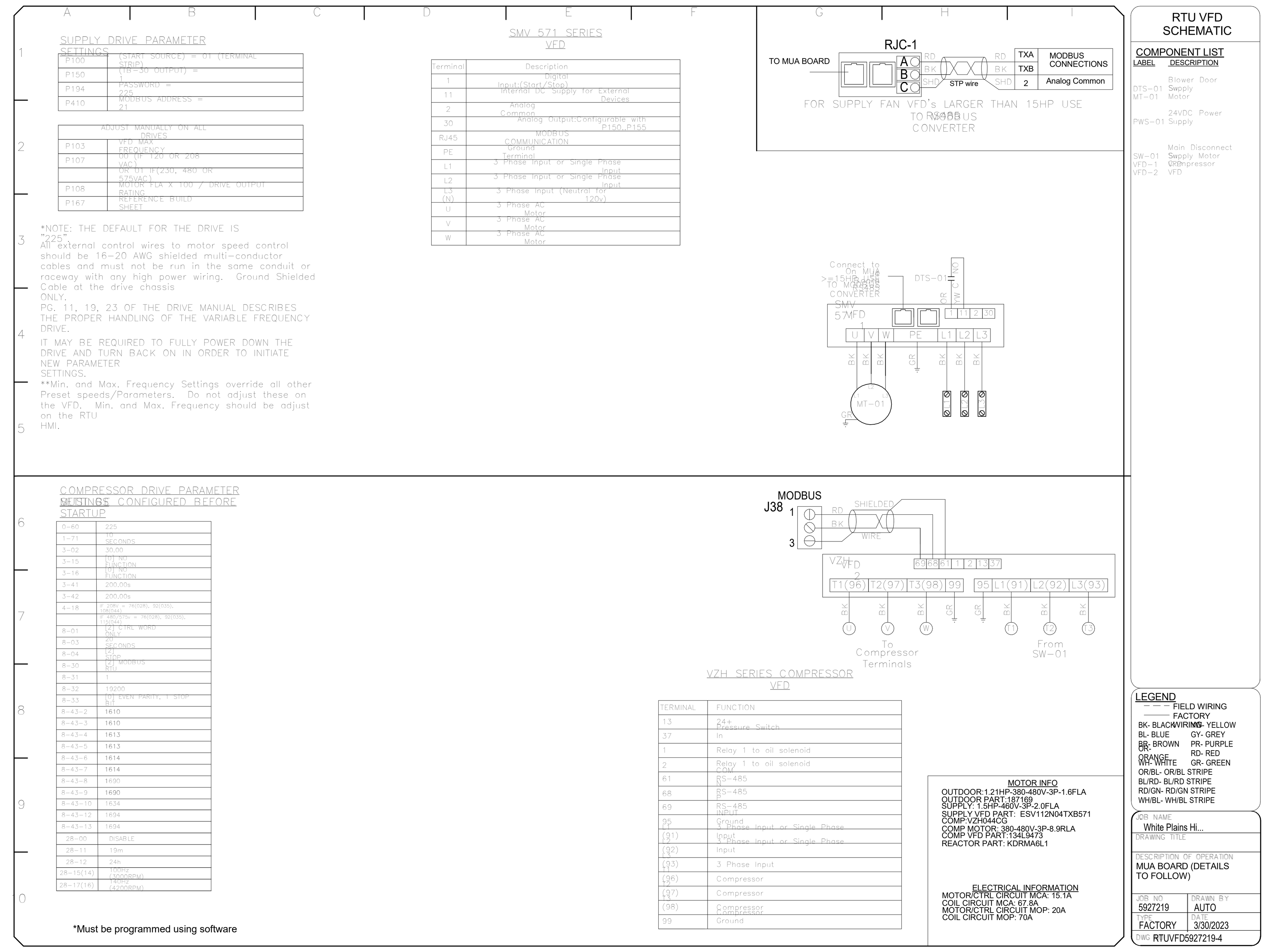

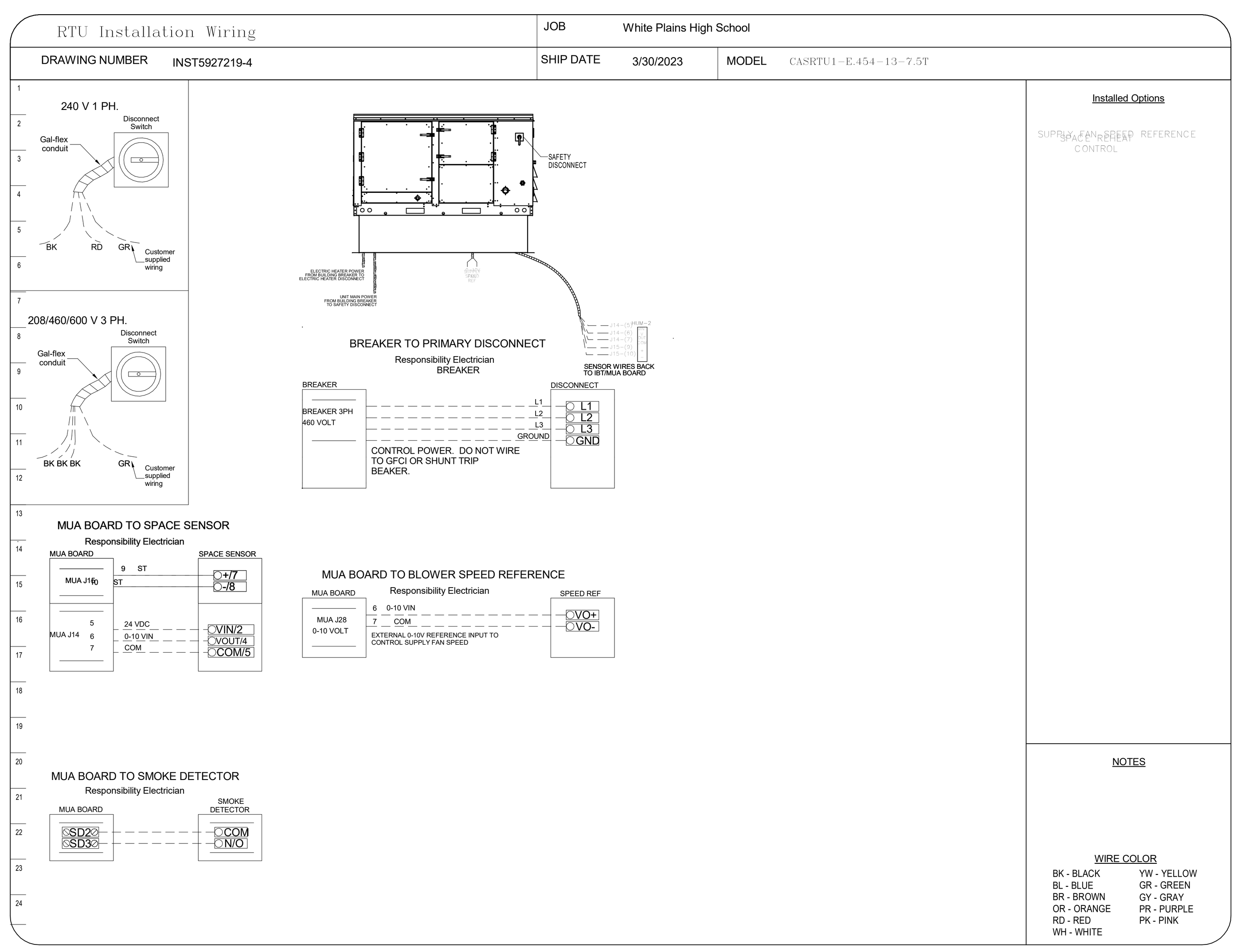

H2M architects + engineers

538 Broad Hollow Road, 4th Floor East
Melville, NY 11747
631.756.8000 ▪ www.h2m.com
Land Surveying Certificate of Authorization No.: 0018178
Engineering Certificate of Authorization No.: 0018438

CONSULTANTS:

MARK	DATE	DESCRIPTION

STATE OF NEW YORK · BRIAN CASTELLI · 099167 · LICENSED PROFESSIONAL ENGINEER

DESIGNED BY:	DRAWN BY:	CHECKED BY:	REVIEWED BY:
RVS	RVS	BMC	

PROJECT No:	DATE:	SCALE:
WPSD2203	FEBRUARY 2025	AS SHOWN

CLIENT

WHITE PLAINS CITY SCHOOL DISTRICT

HIGH SCHOOL ADDITION

66-22-00-01-0-016-030

CONTRACT

CONTRACT M

STATUS

FINAL BID DOCUMENT

SHEET TITLE

HVAC
BUILDING
KITCHEN DETAILS SHEET 10 OF 15

DRAWING No.

M 509.00

3/21/2025 5:09:51 PM C:\Users\bcastelli\Documents\WPSD2203_Central21_M_bcastelli7RBCQ.rvt

ELECTRICAL PACKAGE –
JOB#5927219

NO	TAG	PACKAGE #	LOCATION	SWITCHES LOCATION	SWITCHES QUANTITY	OPTION	FANS CONTROLLED TYPE	ϕ	HP	VOLT	FLA
1		DCV-2111	UTILITY CABINET LEFT	UTILITY CABINET RIGHT	1 LIGHT	SMART CONTROLS DCV	EXHAUST	3	5.000	208	15.0
				HOOD # 2	1 FAN		EXHAUST	3	5.000	208	15.8
							SUPPLY	3	10.000	460	12.2

JOB NO 5927219 | MODEL NUMBER DCV-2111 | JOB NAME White Plains High School | DRAWN BY: 3/30/2023 | INSTALL ECP #1-1

DESCRIPTION OF OPERATION:
Demand Control Ventilation, w/ control for 2 Exhaust Fans, 1 Supply Fan, Exhaust on in Fire, Lights out in Fire, Fans modulate based on duct temperature. INVERTER DUTY 3 PHASE MOTOR REQUIRED FOR USE WITH VFD. Room temperature sensor shipped loose for field installation Verify distance between VFD and Motor, additional cost could apply if distance exceeds 50 feet.

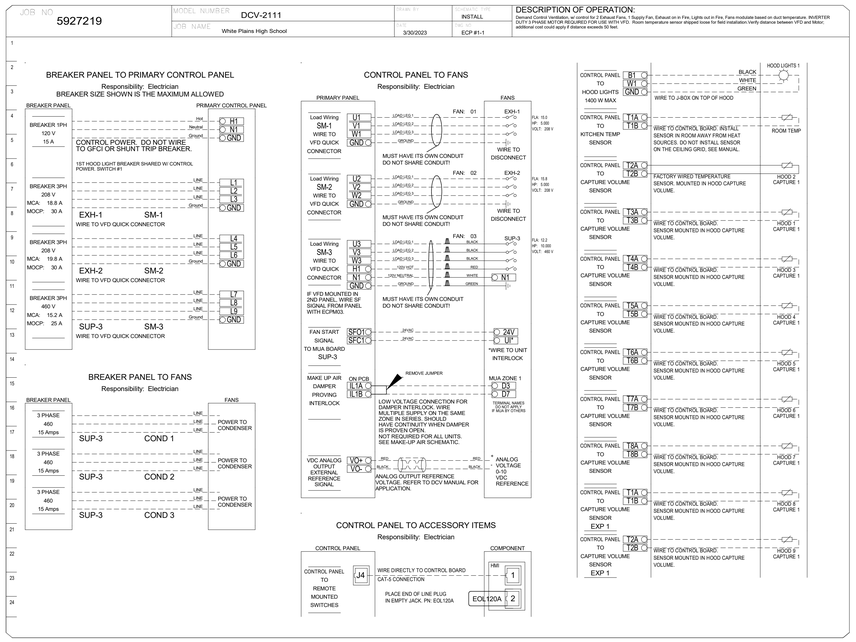

JOB NO 5927219 | MODEL NUMBER DCV-2111 | JOB NAME White Plains High School | DRAWN BY: 3/30/2023 | INSTALL ECP #1-2

DESCRIPTION OF OPERATION:
Demand Control Ventilation, w/ control for 2 Exhaust Fans, 1 Supply Fan, Exhaust on in Fire, Lights out in Fire, Fans modulate based on duct temperature. INVERTER DUTY 3 PHASE MOTOR REQUIRED FOR USE WITH VFD. Room temperature sensor shipped loose for field installation Verify distance between VFD and Motor, additional cost could apply if distance exceeds 50 feet.

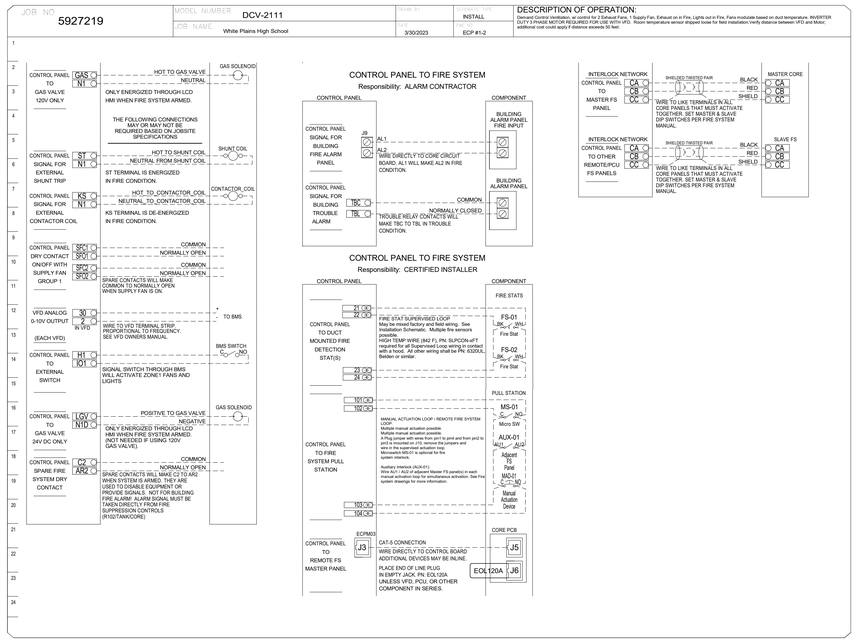

JOB NO 5927219 | MODEL NUMBER DCV-2111 | JOB NAME White Plains High School | DRAWN BY: 3/30/2023 | INSTALL ECP #1-3

DESCRIPTION OF OPERATION:
Fire System #1 TANK FS - 4.0/4.0.

TANK PROTECTION ELECTRICAL DETAIL

02/10/2021 Rev. 2

FS-1: MASTER

ELECTRICIAN:
1. WIRE MAIN CONTROL PANEL PER INCLUDED SCHEMATIC
2. WIRE ALL FANS PER INCLUDED SCHEMATIC
3. WIRE SHUNT TRIP BREAKER (OPTIONAL)
4. WIRE LIDS APPLIANCE KILL SWITCH, IF EQUIPPED (OPTIONAL)
5. WIRE GAS VALVE

ELECTRICAL CONTRACTOR REQUIREMENT

ITEM	CONNECTION IN PANEL	CONNECTION IN DEVICE	VOLTAGE	AMPERAGE	COMMENTS
SHUNT TRIP BREAKER (OPTIONAL)	ST & N1	BREAKER COIL (A1 & A2)	120 VAC	< 4 AMPS	ST TO A1 ON SHUNT BREAKER COIL, AND NEUTRAL TO A2 ON SHUNT TRIP BREAKER COIL
CONTROL PANEL POWER	H1 & N1 + GROUND	CIRCUIT BREAKER	120 VAC	15 AMPS	CONTROL PANEL POWER MUST NOT BE RUN THROUGH SHUNT TRIP BREAKER
LIDS APPLIANCE KILL SWITCH (OPTIONAL)	KTS & N1	KTS & N1	120 VAC	< 4 AMPS	KILL SWITCH TERMINALS MUST BE IN SERIES WITH OTHER KILL SWITCHES
REMOTE 120VAC ANSUL AUTOMAN (OPTIONAL)	AU1, AU2	SOLENOID	120 VAC	< 6 AMPS	120V TO AU1, AU2 TO ANSUL ELECTRIC AUTOMAN. ANSUL SOLENOID TO NEUTRAL
GAS VALVE	LGV & N1D (IF 24 VDC) GAS & N1 (IF 120 VAC)	RED/RED/GREEN	24 VDC OR 120 VAC	< 1.0 AMPS	IF 24 VDC - 2 WIRES & GROUND. N1D TO RED, LGV TO RED, AND GREEN TO GROUND IF 120 VAC - 2 WIRES & GROUND GAS TO RED, N1 TO RED, AND GREEN TO GROUND

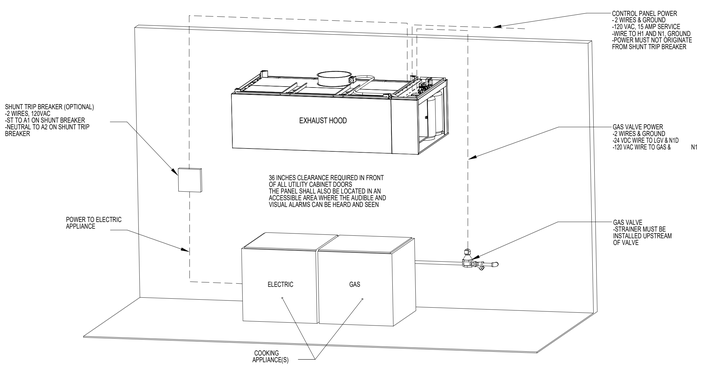

NOTE: SEE INSTALLATION, OPERATION, AND MAINTENANCE MANUAL FOR FURTHER INSTRUCTIONS

JOB NO 5927219 | MODEL NUMBER DCV-2111 | JOB NAME White Plains High School | DRAWN BY: 3/30/2023 | INSTALL ECP #1-4

DESCRIPTION OF OPERATION:
Fire System #1 TANK FS - 4.0/4.0.

TANK PROTECTION LOW-VOLTAGE DETAIL

02/10/2021 Rev. 2

FS-1: MASTER

ALARM CONTRACTOR:
1. WIRE MANUAL ACTUATION DEVICE(S), REMOTE FIRESTAT(S), CORE INTERLOCK(S), FIRE SENSOR(S) AND FIRE ALARM CONTACTS
2. COMPLETE FINAL HOOKUP OF SYSTEM
3. VERIFY FINAL FIRE SYSTEM TEST

ALARM CONTRACTOR REQUIREMENT

ITEM	CONNECTION IN PANEL	CONNECTION ON DEVICE	VOLTAGE	AMPERAGE	COMMENTS
MANUAL ACTUATION DEVICE(S)	101 AND 104 102 AND 103	1 & 2	24 VDC	< 1.0 AMPS	WIRE MANUAL ACTUATION DEVICE TERMINAL 1 BETWEEN CORE PANEL TERMINALS 102 AND 103 WIRE MANUAL ACTUATION DEVICE TERMINAL 2 BETWEEN CORE PANEL TERMINALS 101 AND 104 JUMPER 101 TO 104 AND 102 TO 103 IF NO MANUAL ACTUATION DEVICE IS INSTALLED
MANUAL ACTUATION DEVICE COVER	N/A	N/A	N/A	N/A	MANUAL ACTUATION DEVICE COVER MUST BE INSTALLED IF SURFACE MOUNTED. USE COVER EXTENSION STI-6531B
REMOTE FIRESTAT SENSOR(S)	21 AND 24 22 AND 23	BLACK AND WHITE	24 VDC	< 1.0 AMPS	WIRE FIRE SENSOR WHITE WIRES BETWEEN HOOD CORE PANEL TERMINALS 22 AND 23 WIRE FIRE SENSOR BLACK WIRE BETWEEN HOOD CORE PANEL TERMINALS 21 AND 24 HIGH TEMP (MX2*) #CW04427 (WHT) & #CW04427B (BLK)WIRE OR SIMILAR ONLY IF RAN OVER TOP OF HOOD, OTHERWISE BELDEN #6320UL OR SIMILAR PLENUM RATED WIRE. SEE FIGURE 1
FIRE ALARM CONTACT	AL1, AL2	VARIES	50V MAX (AC/DC)	UP TO 1 AMP	FIRE ALARM RELAY CONTACTS FOR BUILDING FIRE ALARM LOCATED IN THE CORE ELECTRICAL CONTROL PANEL
CORE INTERLOCK(S)	ILA, ILB, ILC	ILA, ILB, ILC	RS-485 COMMUNICATIONS SIGNAL		CORE SYSTEM (1) ILA. TO CORE SYSTEM (2) ILA. CORE SYSTEM (1) ILB. TO CORE SYSTEM (2) ILB. CORE SYSTEM (1) ILC. TO CORE SYSTEM (2) ILC. USE BELDEM 88760 OR SIMILAR WIRE
TROUBLE CONTACT	TBC, TBL, TOK	VARIES	MAX 120 VAC	UP TO 6 AMPS	WIRE TO TBL & TBC NORMALLY OPEN CONTACT. CLOSES IN TROUBLE CONDITION
CORE COMMUNICATIONS CABLE	RJ-45 Jack	INTERNET CONNECTION	SIGNAL	<1.0 AMPS	TYPICAL CONNECTION CAT5 CABLE TO LOCAL AREA NETWORK VIA ETHERNET SWITCH OR WIRELESS ROUTER WITH VALID INTERNET CONNECTION

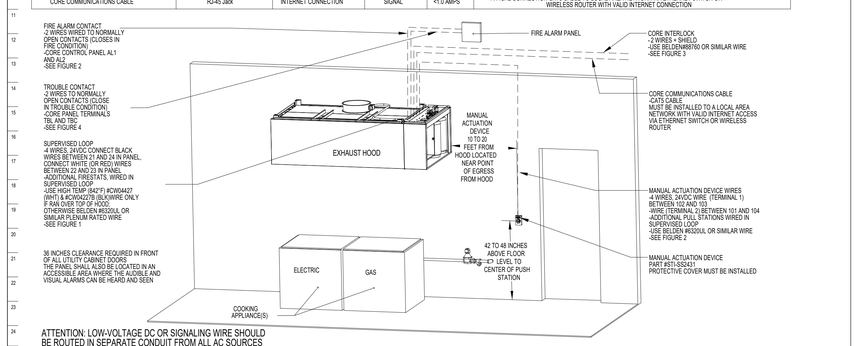

ATTENTION: LOW-VOLTAGE DC OR SIGNALING WIRE SHOULD BE ROUTED IN SEPARATE CONDUIT FROM ALL AC SOURCES

NOTE: SEE INSTALLATION, OPERATION, AND MAINTENANCE MANUAL FOR FURTHER INSTRUCTIONS

H2M architects + engineers
538 Broad Hollow Road, 4th Floor East
Melville, NY 11747
631.756.8000 • www.h2m.com
Land Surveying Certificate of Authorization No.: 0018178
Engineering Certificate of Authorization No.: 0018438

CONSULTANTS:

MARK	DATE	DESCRIPTION

STATE OF NEW YORK · BRIAN CASTELLI · 099167 · LICENSED PROFESSIONAL ENGINEER

DESIGNED BY:	DRAWN BY:	CHECKED BY:	REVIEWED BY:
RVS	RVS	BMC	-
PROJECT No: WPSD2203	DATE: FEBRUARY 2025	SCALE: AS SHOWN	

CLIENT
WHITE PLAINS CITY SCHOOL DISTRICT

HIGH SCHOOL ADDITION

66-22-00-01-0-016-030

CONTRACT
CONTRACT M

STATUS
FINAL BID DOCUMENT

SHEET TITLE
HVAC
BUILDING
KITCHEN DETAILS SHEET 11 OF 15

DRAWING No.
M 510.00

C:\Users\bcastelli\h2mcontent\WPSD2203_Central21_M_bcastelli\R78\DCV.rvt
3/21/2025 5:09:51 PM

JOB NO	MODEL NUMBER	DRAWN BY	CONTRACT TYPE	DESCRIPTION OF OPERATION:
5927219	DCV-2111		INSTALL	Fire System #1 TANK FS - 4 G/4 O.
	JOB NAME: White Plains High School	DATE: 3/30/2023	CAP: ECP #1-5	

TANK PROTECTION LOW-VOLTAGE FIGURES

02/10/2021 Rev. 17

FS-1: MASTER

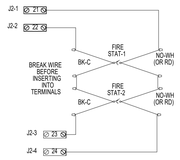

WIRING CONNECTIONS FOR FIRESTAT LOOP FIGURE 1

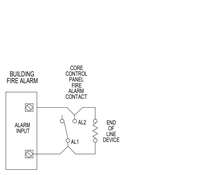

WIRING CONNECTIONS FOR MANUAL ACTUATION LOOP FIGURE 1A

WIRING CONNECTIONS FOR FIRE ALARM CONTACT FIGURE 2

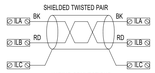

WIRING CONNECTIONS FOR CORE INTERLOCK FIGURE 3

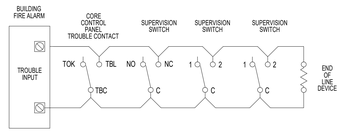

WIRING CONNECTIONS FOR TROUBLE CONTACT FIGURE 4

NOTE: SEE INSTALLATION, OPERATION, AND MAINTENANCE MANUAL FOR FURTHER INSTRUCTIONS

ATTENTION: LOW-VOLTAGE DC OR SIGNALING WIRE SHOULD BE ROUTED IN SEPARATE CONDUIT FROM ALL AC SOURCES

JOB NO	MODEL NUMBER	DRAWN BY	CONTRACT TYPE	DESCRIPTION OF OPERATION:
5927219	DCV-2111		INSTALL	Fire System #2 TANK FS - 4 G/4 O.
	JOB NAME: White Plains High School	DATE: 3/30/2023	CAP: ECP #1-6	

TANK PROTECTION ELECTRICAL DETAIL

02/10/2021 Rev. 2

FS-2: SLAVE

ELECTRICIAN:
1. WIRE MAIN CONTROL PANEL PER INCLUDED SCHEMATIC
2. WIRE ALL FANS PER INCLUDED SCHEMATIC
3. WIRE SHUNT TRIP BREAKER (OPTIONAL)
4. WIRE UDS APPLIANCE KILL SWITCH, IF EQUIPPED (OPTIONAL)
5. WIRE GAS VALVE

ELECTRICAL CONTRACTOR REQUIREMENT

ITEM	CONNECTION IN PANEL	CONNECTION IN DEVICE	VOLTAGE	AMPERAGE	COMMENTS
SHUNT TRIP BREAKER (OPTIONAL)	ST & N1	BREAKER COIL (A1 & A2)	120 VAC	< 4 AMPS	ST TO A1 ON SHUNT BREAKER COIL, AND NEUTRAL TO A2 ON SHUNT TRIP BREAKER COIL
CONTROL PANEL POWER	H1 & N1 + GROUND	CIRCUIT BREAKER	120 VAC	15 AMPS	CONTROL PANEL POWER MUST NOT BE RUN THROUGH SHUNT TRIP BREAKER
UDS APPLIANCE KILL SWITCH (OPTIONAL)	KTS & N1	KTS & N1	120 VAC	< 4 AMPS	KILL SWITCH TERMINALS MUST BE IN SERIES WITH OTHER KILL SWITCHES
REMOTE 120VAC ANSUL AUTOMAN (OPTIONAL)	AU1, AU2	SOLENOID	120 VAC	< 6 AMPS	120V TO AU1, AU2 TO ANSUL ELECTRIC AUTOMAN, ANSUL SOLENOID TO NEUTRAL
GAS VALVE	LGV & N1D (IF 24 VDC) GAS & N1 (IF 120 VAC)	RED/RED/GREEN	24 VDC OR 120 VAC	< 1.0 AMPS	IF 24 VDC - 2 WIRES & GROUND, N1D TO RED, LGV TO RED, AND GREEN TO GROUND IF 120 VAC - 2 WIRES & GROUND GAS TO RED, N1 TO RED, AND GREEN TO GROUND

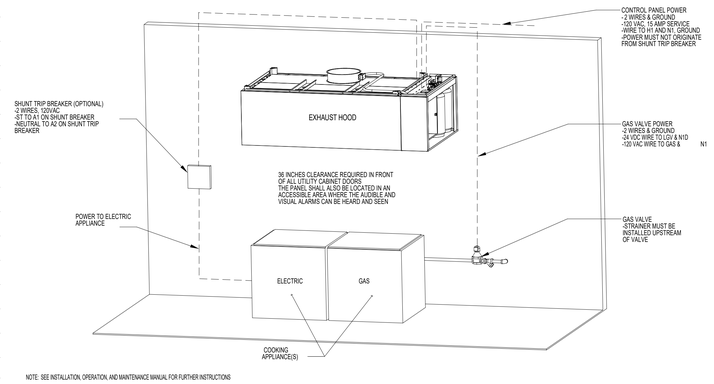

NOTE: SEE INSTALLATION, OPERATION, AND MAINTENANCE MANUAL FOR FURTHER INSTRUCTIONS

JOB NO	MODEL NUMBER	DRAWN BY	CONTRACT TYPE	DESCRIPTION OF OPERATION:
5927219	DCV-2111		INSTALL	Fire System #2 TANK FS - 4 G/4 O.
	JOB NAME: White Plains High School	DATE: 3/30/2023	CAP: ECP #1-7	

TANK PROTECTION LOW-VOLTAGE DETAIL

02/10/2021 Rev. 2

FS-2: SLAVE

ALARM CONTRACTOR:
1. WIRE MANUAL ACTUATION DEVICE(S), REMOTE FIRESTAT(S), CORE INTERLOCK(S), FIRE SENSOR(S) AND FIRE ALARM CONTACTS
2. COMPLETE FINAL HOOKUP OF SYSTEM
3. VERIFY FINAL FIRE SYSTEM TEST

ALARM CONTRACTOR REQUIREMENT

ITEM	CONNECTION IN PANEL	CONNECTION ON DEVICE	VOLTAGE	AMPERAGE	COMMENTS
MANUAL ACTUATION DEVICE(S)	101 AND 104 102 AND 103	1 & 2	24 VDC	< 1.0 AMPS	WIRE MANUAL ACTUATION DEVICE TERMINAL 1 BETWEEN CORE PANEL TERMINALS 102 AND 103 WIRE MANUAL ACTUATION DEVICE TERMINAL 2 BETWEEN CORE PANEL TERMINALS 101 AND 104 JUMPER 101 TO 104 AND 102 TO 103 IF NO MANUAL ACTUATION DEVICE IS INSTALLED
MANUAL ACTUATION DEVICE COVER	N/A	N/A	N/A	N/A	MANUAL ACTUATION DEVICE COVER MUST BE INSTALLED IF SURFACE MOUNTED, USE COVER EXTENSION STI-6531B
REMOTE FIRESTAT SENSOR(S)	21 AND 24 22 AND 23	BLACK AND WHITE	24 VDC	< 1.0 AMPS	WIRE FIRE SENSOR WHITE WIRES BETWEEN HOOD CORE PANEL TERMINALS 22 AND 23 WIRE FIRE SENSOR BLACK WIRE BETWEEN HOOD CORE PANEL TERMINALS 21 AND 24 HIGH TEMP (84°F) #CW04427 (WHT) & #CW04427B (BLK)WIRE OR SIMILAR ONLY IF RAN OVER TOP OF HOOD, OTHERWISE BELDEN #6320UL OR SIMILAR PLENUM RATED WIRE, SEE FIGURE 1
FIRE ALARM CONTACT	AL1, AL2	VARIES	50V MAX (AC/DC)	UP TO 1 AMP	FIRE ALARM RELAY CONTACTS FOR BUILDING FIRE ALARM LOCATED IN THE CORE ELECTRICAL CONTROL PANEL
CORE INTERLOCK(S)	ILA, ILB, ILC	ILA, ILB, ILC	RS-485 COMMUNICATIONS SIGNAL		CORE SYSTEM (1) ILA, TO CORE SYSTEM (2) ILA, CORE SYSTEM (1) ILB, TO CORE SYSTEM (2) ILB. CORE SYSTEM (1) ILC, TO CORE SYSTEM (2) ILC. USE BELDEN# 88760 OR SIMILAR WIRE
TROUBLE CONTACT	TBC, TBL, TOK	VARIES	MAX 120 VAC	UP TO 6 AMPS	WIRE TO TBL & TBC NORMALLY OPEN CONTACT, CLOSES IN TROUBLE CONDITION
CORE COMMUNICATIONS CABLE	RJ-45 Jack	INTERNET CONNECTION	SIGNAL	<1.0 AMPS	TYPICAL CONNECTION CAT5 CABLE TO LOCAL AREA NETWORK VIA ETHERNET SWITCH OR WIRELESS ROUTER WITH VALID INTERNET CONNECTION

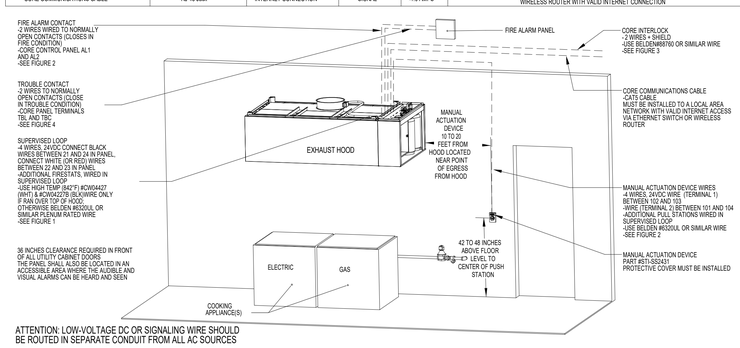

ATTENTION: LOW-VOLTAGE DC OR SIGNALING WIRE SHOULD BE ROUTED IN SEPARATE CONDUIT FROM ALL AC SOURCES

NOTE: SEE INSTALLATION, OPERATION, AND MAINTENANCE MANUAL FOR FURTHER INSTRUCTIONS

JOB NO	MODEL NUMBER	DRAWN BY	CONTRACT TYPE	DESCRIPTION OF OPERATION:
5927219	DCV-2111		INSTALL	Fire System #2 TANK FS - 4 G/4 O.
	JOB NAME: White Plains High School	DATE: 3/30/2023	CAP: ECP #1-8	

TANK PROTECTION LOW-VOLTAGE FIGURES

02/10/2021 Rev. 17

FS-2: SLAVE

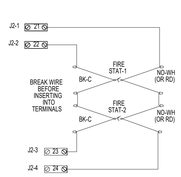

WIRING CONNECTIONS FOR FIRESTAT LOOP FIGURE 1

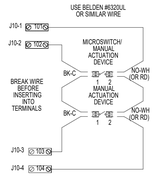

WIRING CONNECTIONS FOR MANUAL ACTUATION LOOP FIGURE 1A

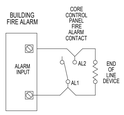

WIRING CONNECTIONS FOR FIRE ALARM CONTACT FIGURE 2

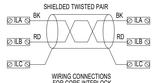

WIRING CONNECTIONS FOR CORE INTERLOCK FIGURE 3

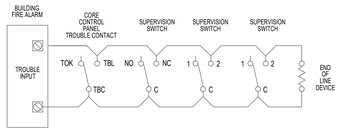

WIRING CONNECTIONS FOR TROUBLE CONTACT FIGURE 4

NOTE: SEE INSTALLATION, OPERATION, AND MAINTENANCE MANUAL FOR FURTHER INSTRUCTIONS

ATTENTION: LOW-VOLTAGE DC OR SIGNALING WIRE SHOULD BE ROUTED IN SEPARATE CONDUIT FROM ALL AC SOURCES

H2M architects + engineers

538 Broad Hollow Road, 4th Floor East
Melville, NY 11747
631.756.8000 • www.h2m.com
Land Surveying Certificate of Authorization No.: 0018178
Engineering Certificate of Authorization No.: 0018438

CONSULTANTS:

MARK	DATE	DESCRIPTION

STATE OF NEW YORK · BRIAN CASTELLI · 099167 · LICENSED PROFESSIONAL ENGINEER

DESIGNED BY:	DRAWN BY:	CHECKED BY:	REVIEWED BY:
RVS	RVS	BMC	
PROJECT No: WPSD2203	DATE: FEBRUARY 2025	SCALE: AS SHOWN	

CLIENT

WHITE PLAINS CITY SCHOOL DISTRICT

HIGH SCHOOL ADDITION

White Plains Public Schools · REAL LIFE LEARNING

66-22-00-01-0-016-030

CONTRACT

CONTRACT M

STATUS

FINAL BID DOCUMENT

SHEET TITLE

HVAC BUILDING KITCHEN DETAILS SHEET 12 OF 15

DRAWING No.

M 511.00

C:\Users\bcastelli\Documents\WPSD2203_Contract_M_bcastelli.RTB\ECO.rvt

3/21/2025 5:09:52 PM

JOB NO	MODEL NUMBER	DRAWN BY:	CONTRACT NO.	DESCRIPTION OF OPERATION:
5927219	DCV-2111		INSTALL	Fire System #3 TANK FS - 4-DH.C.
	JOB NAME: White Plains High School	DATE: 3/30/2023	ECP #1-9	

TANK PROTECTION ELECTRICAL DETAIL

02/10/2021 Rev. 2

ELECTRICIAN:
1. WIRE MAIN CONTROL PANEL PER INCLUDED SCHEMATIC
2. WIRE ALL FANS PER INCLUDED SCHEMATIC
3. WIRE SHUNT TRIP BREAKER (OPTIONAL)
4. WIRE UDS APPLIANCE KILL SWITCH, IF EQUIPPED (OPTIONAL)
5. WIRE GAS VALVE

FS-3: SLAVE

ELECTRICAL CONTRACTOR REQUIREMENT

ITEM	CONNECTION IN PANEL	CONNECTION IN DEVICE	VOLTAGE	AMPERAGE	COMMENTS
SHUNT TRIP BREAKER (OPTIONAL)	ST & N1	BREAKER COIL (A1 & A2)	120 VAC	< 4 AMPS	ST TO A1 ON SHUNT BREAKER COIL, AND NEUTRAL TO A2 ON SHUNT TRIP BREAKER COIL
CONTROL PANEL POWER	H1 & N1 + GROUND	CIRCUIT BREAKER	120 VAC	15 AMPS	CONTROL PANEL POWER MUST NOT BE RUN THROUGH SHUNT TRIP BREAKER
UDS APPLIANCE KILL SWITCH (OPTIONAL)	KTS & N1	KTS & N1	120 VAC	< 4 AMPS	KILL SWITCH TERMINALS MUST BE IN SERIES WITH OTHER KILL SWITCHES
REMOTE 120VAC ANSUL AUTOMAN (OPTIONAL)	AU1, AU2	SOLENOID	120 VAC	< 6 AMPS	120V TO AU1, AU2 TO ANSUL ELECTRIC AUTOMAN, ANSUL SOLENOID TO NEUTRAL
GAS VALVE	LGV & N1D (IF 24 VDC) GAS & N1 (IF 120 VAC)	RED/RED/GREEN	24 VDC OR 120 VAC	< 1.0 AMPS	IF 24 VDC - 2 WIRES & GROUND, N1D TO RED, LGV TO RED, AND GREEN TO GROUND IF 120 VAC - 2 WIRES & GROUND GAS TO RED, N1 TO RED, AND GREEN TO GROUND

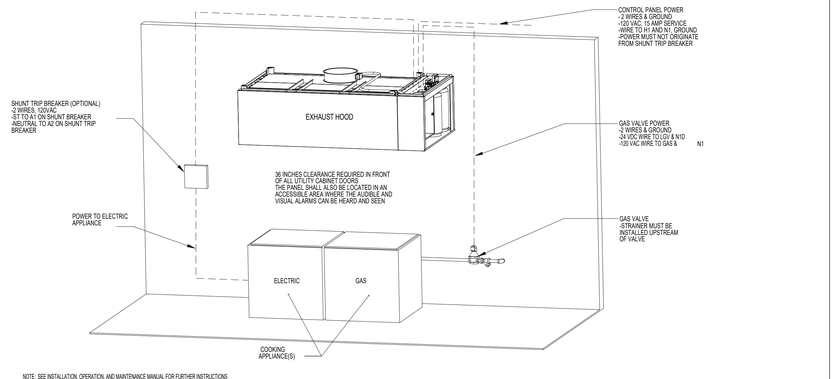

NOTE: SEE INSTALLATION, OPERATION, AND MAINTENANCE MANUAL FOR FURTHER INSTRUCTIONS

JOB NO	MODEL NUMBER	DRAWN BY:	CONTRACT NO.	DESCRIPTION OF OPERATION:
5927219	DCV-2111		INSTALL	Fire System #3 TANK FS - 4-DH.C.
	JOB NAME: White Plains High School	DATE: 3/30/2023	ECP #1-10	

TANK PROTECTION LOW-VOLTAGE DETAIL

02/10/2021 Rev. 2

ALARM CONTRACTOR:
1. WIRE MANUAL ACTUATION DEVICE(S), REMOTE FIRESTAT(S), CORE INTERLOCK(S), FIRE SENSOR(S) AND FIRE ALARM CONTACTS
2. COMPLETE FINAL HOOKUP OF SYSTEM
3. VERIFY FINAL FIRE SYSTEM TEST

FS-3: SLAVE

ALARM CONTRACTOR REQUIREMENT

ITEM	CONNECTION IN PANEL	CONNECTION ON DEVICE	VOLTAGE	AMPERAGE	COMMENTS
MANUAL ACTUATION DEVICE(S)	101 AND 104 102 AND 103	1 & 2	24 VDC	< 1.0 AMPS	WIRE MANUAL ACTUATION DEVICE TERMINAL 1 BETWEEN CORE PANEL TERMINALS 102 AND 103 WIRE MANUAL ACTUATION DEVICE TERMINAL 2 BETWEEN CORE PANEL TERMINALS 101 AND 104 JUMPER 101 TO 104 AND 102 TO 103 IF NO MANUAL ACTUATION DEVICE IS INSTALLED
MANUAL ACTUATION DEVICE COVER	N/A	N/A	N/A	N/A	MANUAL ACTUATION DEVICE COVER MUST BE INSTALLED IF SURFACE MOUNTED, USE COVER EXTENSION ST-453-18
REMOTE FIRESTAT SENSOR(S)	21 AND 24 22 AND 23	BLACK AND WHITE	24 VDC	< 1.0 AMPS	WIRE FIRE SENSOR WHITE WIRES BETWEEN HOOD CORE PANEL TERMINALS 22 AND 23 WIRE FIRE SENSOR BLACK WIRE BETWEEN HOOD CORE PANEL TERMINALS 21 AND 24 HIGH TEMP (842°F) #CW04427 (WHT) & #CW04427B (BLK)WIRE OR SIMILAR ONLY IF RAN OVER TOP OF HOOD, OTHERWISE BELDEN #6320UL OR SIMILAR PLENUM RATED WIRE. SEE FIGURE 1
FIRE ALARM CONTACT	AL1, AL2	VARIES	50V MAX (AC/DC)	UP TO 1 AMP	FIRE ALARM RELAY CONTACTS FOR BUILDING FIRE ALARM LOCATED IN THE CORE ELECTRICAL CONTROL PANEL
CORE INTERLOCK(S)	ILA, ILB, ILC	ILA, ILB, ILC	RS-485 COMMUNICATIONS SIGNAL		CORE SYSTEM (1) ILA, TO CORE SYSTEM (2) ILA, CORE SYSTEM (1) ILB, TO CORE SYSTEM (2) ILB. CORE SYSTEM (1) ILC, TO CORE SYSTEM (2) ILC. USE BELDEN# 88760 OR SIMILAR WIRE
TROUBLE CONTACT	TBC, TBL, TOK	VARIES	MAX 120 VAC	UP TO 6 AMPS	WIRE TO TBL & TBC NORMALLY OPEN CONTACT, CLOSES IN TROUBLE CONDITION
CORE COMMUNICATIONS CABLE	RJ-45 Jack	INTERNET CONNECTION	SIGNAL	<1.0 AMPS	TYPICAL CONNECTION CAT5 CABLE TO LOCAL AREA NETWORK VIA ETHERNET SWITCH OR WIRELESS ROUTER WITH VALID INTERNET CONNECTION

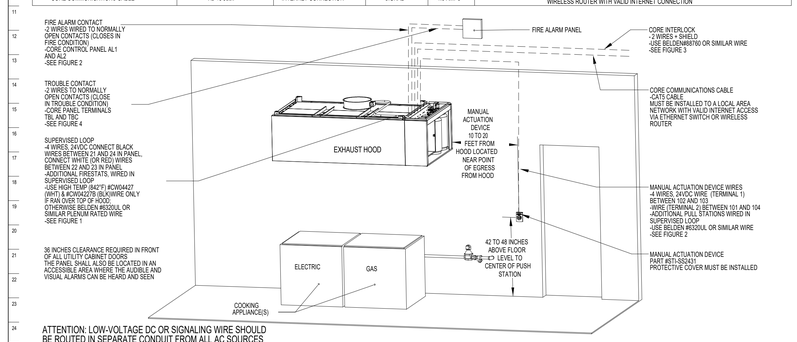

ATTENTION: LOW-VOLTAGE DC OR SIGNALING WIRE SHOULD BE ROUTED IN SEPARATE CONDUIT FROM ALL AC SOURCES

NOTE: SEE INSTALLATION, OPERATION, AND MAINTENANCE MANUAL FOR FURTHER INSTRUCTIONS

JOB NO	MODEL NUMBER	DRAWN BY:	CONTRACT NO.	DESCRIPTION OF OPERATION:
5927219	DCV-2111		INSTALL	Fire System #3 TANK FS - 4-DH.C.
	JOB NAME: White Plains High School	DATE: 3/30/2023	ECP #1-11	

TANK PROTECTION LOW-VOLTAGE FIGURES

02/10/2021 Rev. 17

FS-3: SLAVE

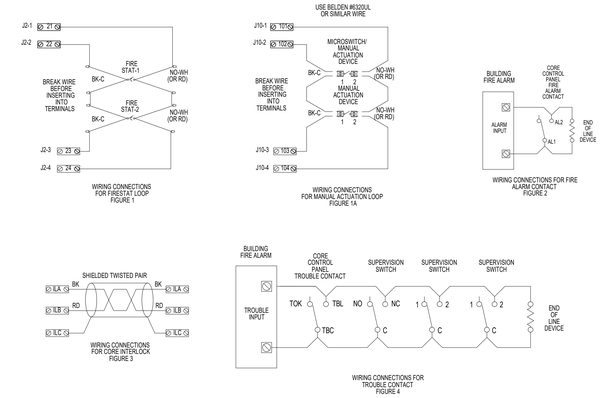

ATTENTION: LOW-VOLTAGE DC OR SIGNALING WIRE SHOULD BE ROUTED IN SEPARATE CONDUIT FROM ALL AC SOURCES

NOTE: SEE INSTALLATION, OPERATION, AND MAINTENANCE MANUAL FOR FURTHER INSTRUCTIONS

JOB NO	MODEL NUMBER	DRAWN BY:	CONTRACT NO.	DESCRIPTION OF OPERATION:
5927219	DCV-2111		INSTALL	Fire System #4 TANK FS - 4-DH.C.
	JOB NAME: White Plains High School	DATE: 3/30/2023	ECP #1-12	

TANK PROTECTION ELECTRICAL DETAIL

02/10/2021 Rev. 2

ELECTRICIAN:
1. WIRE MAIN CONTROL PANEL PER INCLUDED SCHEMATIC
2. WIRE ALL FANS PER INCLUDED SCHEMATIC
3. WIRE SHUNT TRIP BREAKER (OPTIONAL)
4. WIRE UDS APPLIANCE KILL SWITCH, IF EQUIPPED (OPTIONAL)
5. WIRE GAS VALVE

FS-4: SLAVE

ELECTRICAL CONTRACTOR REQUIREMENT

ITEM	CONNECTION IN PANEL	CONNECTION IN DEVICE	VOLTAGE	AMPERAGE	COMMENTS
SHUNT TRIP BREAKER (OPTIONAL)	ST & N1	BREAKER COIL (A1 & A2)	120 VAC	< 4 AMPS	ST TO A1 ON SHUNT BREAKER COIL, AND NEUTRAL TO A2 ON SHUNT TRIP BREAKER COIL
CONTROL PANEL POWER	H1 & N1 + GROUND	CIRCUIT BREAKER	120 VAC	15 AMPS	CONTROL PANEL POWER MUST NOT BE RUN THROUGH SHUNT TRIP BREAKER
UDS APPLIANCE KILL SWITCH (OPTIONAL)	KTS & N1	KTS & N1	120 VAC	< 4 AMPS	KILL SWITCH TERMINALS MUST BE IN SERIES WITH OTHER KILL SWITCHES
REMOTE 120VAC ANSUL AUTOMAN (OPTIONAL)	AU1, AU2	SOLENOID	120 VAC	< 6 AMPS	120V TO AU1, AU2 TO ANSUL ELECTRIC AUTOMAN, ANSUL SOLENOID TO NEUTRAL
GAS VALVE	LGV & N1D (IF 24 VDC) GAS & N1 (IF 120 VAC)	RED/RED/GREEN	24 VDC OR 120 VAC	< 1.0 AMPS	IF 24 VDC - 2 WIRES & GROUND, N1D TO RED, LGV TO RED, AND GREEN TO GROUND IF 120 VAC - 2 WIRES & GROUND GAS TO RED, N1 TO RED, AND GREEN TO GROUND

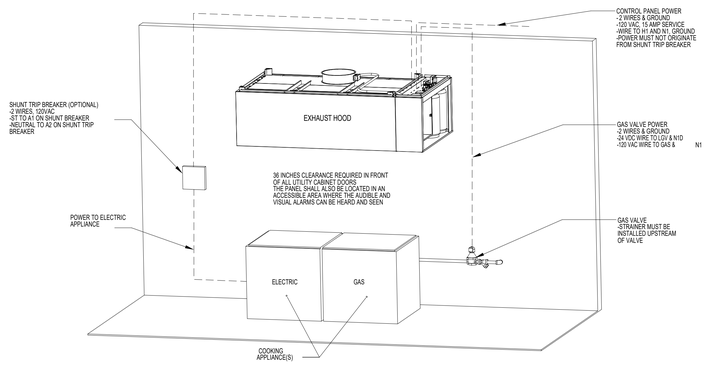

NOTE: SEE INSTALLATION, OPERATION, AND MAINTENANCE MANUAL FOR FURTHER INSTRUCTIONS

H2M architects + engineers
538 Broad Hollow Road, 4th Floor East
Melville, NY 11747
631.756.8000 • www.h2m.com
Land Surveying Certificate of Authorization No.: 0018178
Engineering Certificate of Authorization No.: 0018438

CONSULTANTS:

MARK	DATE	DESCRIPTION

STATE OF NEW YORK · BRIAN CASTELLI · 099167 · LICENSED PROFESSIONAL ENGINEER

DESIGNED BY:	DRAWN BY:	CHECKED BY:	REVIEWED BY:
RVS	RVS	BMC	
PROJECT No: WPSD2203	DATE: FEBRUARY 2025	SCALE: AS SHOWN	

CLIENT
WHITE PLAINS CITY SCHOOL DISTRICT

HIGH SCHOOL ADDITION

White Plains Public Schools · REAL LIFE LEARNING

66-22-00-01-0-016-030

CONTRACT
CONTRACT M

STATUS
FINAL BID DOCUMENT

SHEET TITLE
HVAC BUILDING KITCHEN DETAILS SHEET 13 OF 15

DRAWING No.
M 512.00

C:\Users\bcastelli\Documents\WPSD2203_Central\21_M_bcastelli1TRBKQ3.rvt

3/21/2025 5:09:52 PM

JOB NO	MODEL NUMBER	DRAWN BY	SCHEMATIC NO	DESCRIPTION OF OPERATION:
5927219	DCV-2111		INSTALL	Fire System #4 TANK FS - 4 G4.0.
	JOB NAME: White Plains High School	DATE: 3/30/2023	ECP #1-13	

TANK PROTECTION LOW-VOLTAGE DETAIL

02/10/2021 Rev. 2

FS-4: SLAVE

ALARM CONTRACTOR:
1. WIRE MANUAL ACTUATION DEVICE(S), REMOTE FIRESTAT(S), CORE INTERLOCK(S), FIRE SENSOR(S) AND FIRE ALARM CONTACTS
2. COMPLETE FINAL HOOKUP OF SYSTEM
3. VERIFY FINAL FIRE SYSTEM TEST

ALARM CONTRACTOR REQUIREMENT

ITEM	CONNECTION IN PANEL	CONNECTION ON DEVICE	VOLTAGE	AMPERAGE	COMMENTS
MANUAL ACTUATION DEVICE(S)	101 AND 104 102 AND 103	1 & 2	24 VDC	< 1.0 AMPS	WIRE MANUAL ACTUATION DEVICE TERMINAL 1 BETWEEN CORE PANEL TERMINALS 102 AND 103 WIRE MANUAL ACTUATION DEVICE TERMINAL 2 BETWEEN CORE PANEL TERMINALS 101 AND 104 JUMPER 101 TO 104 AND 102 TO 103 IF NO MANUAL ACTUATION DEVICE IS INSTALLED
MANUAL ACTUATION DEVICE COVER	N/A	N/A	N/A	N/A	MANUAL ACTUATION DEVICE COVER MUST BE INSTALLED IF SURFACE MOUNTED, USE COVER EXTENSION ST1-6531B
REMOTE FIRESTAT SENSOR(S)	21 AND 24 22 AND 23	BLACK AND WHITE	24 VDC	< 1.0 AMPS	WIRE FIRE SENSOR WHITE WIRES BETWEEN HOOD CORE PANEL TERMINALS 22 AND 23 WIRE FIRE SENSOR BLACK WIRE BETWEEN HOOD CORE PANEL TERMINALS 21 AND 24 HIGH TEMP (842°F) #CW04427 (WHT) & #CW04427B (BLK)WIRE OR SIMILAR ONLY IF RAN OVER TOP OF HOOD. OTHERWISE BELDEN #6320UL OR SIMILAR PLENUM RATED WIRE. SEE FIGURE 1
FIRE ALARM CONTACT	AL1, AL2	VARIES	50V MAX (AC/DC)	UP TO 1 AMP	FIRE ALARM RELAY CONTACTS FOR BUILDING FIRE ALARM LOCATED IN THE CORE ELECTRICAL CONTROL PANEL
CORE INTERLOCK(S)	ILA, ILB, ILC	ILA, ILB, ILC	RS-485 COMMUNICATIONS SIGNAL		CORE SYSTEM (1) ILA, TO CORE SYSTEM (2) ILA. CORE SYSTEM (1) ILB, TO CORE SYSTEM (2) ILB. CORE SYSTEM (1) ILC, TO CORE SYSTEM (2) ILC. USE BELDEN# 88760 OR SIMILAR WIRE
TROUBLE CONTACT	TBC, TBL, TOK	VARIES	MAX 120 VAC	UP TO 6 AMPS	WIRE TO TBL & TBC NORMALLY OPEN CONTACT, CLOSES IN TROUBLE CONDITION
CORE COMMUNICATIONS CABLE	RJ-45 Jack	INTERNET CONNECTION	SIGNAL	<1.0 AMPS	TYPICAL CONNECTION CAT5 CABLE TO LOCAL AREA NETWORK VIA ETHERNET SWITCH OR WIRELESS ROUTER WITH VALID INTERNET CONNECTION

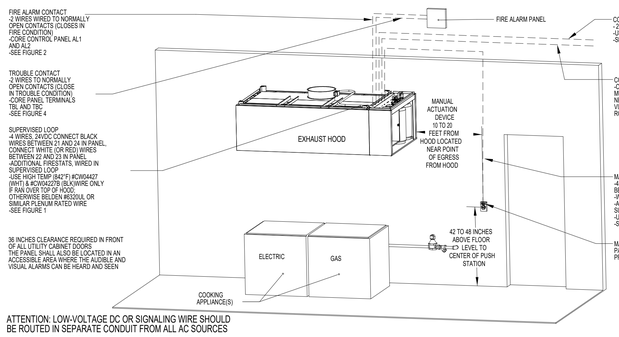

ATTENTION: LOW-VOLTAGE DC OR SIGNALING WIRE SHOULD BE ROUTED IN SEPARATE CONDUIT FROM ALL AC SOURCES

NOTE: SEE INSTALLATION, OPERATION, AND MAINTENANCE MANUAL FOR FURTHER INSTRUCTIONS

JOB NO	MODEL NUMBER	DRAWN BY	SCHEMATIC NO	DESCRIPTION OF OPERATION:
5927219	DCV-2111		INSTALL	Fire System #4 TANK FS - 4 G4.0.
	JOB NAME: White Plains High School	DATE: 3/30/2023	ECP #1-14	

TANK PROTECTION LOW-VOLTAGE FIGURES

02/10/2021 Rev. 17

FS-4: SLAVE

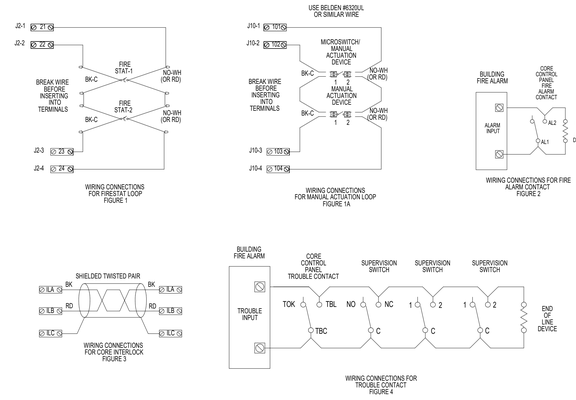

ATTENTION: LOW-VOLTAGE DC OR SIGNALING WIRE SHOULD BE ROUTED IN SEPARATE CONDUIT FROM ALL AC SOURCES

NOTE: SEE INSTALLATION, OPERATION, AND MAINTENANCE MANUAL FOR FURTHER INSTRUCTIONS

JOB NO	MODEL NUMBER	DRAWN BY	SCHEMATIC NO	DESCRIPTION OF OPERATION:
5927219	DCV-2111		INSTALL	Fire System #5 TANK FS - 4 G4.0.
	JOB NAME: White Plains High School	3/30/2023	ECP #1-15	

TANK PROTECTION ELECTRICAL DETAIL

02/10/2021 Rev. 2

FS-5: SLAVE

ELECTRICIAN:
1. WIRE MAIN CONTROL PANEL PER INCLUDED SCHEMATIC
2. WIRE ALL FANS PER INCLUDED SCHEMATIC
3. WIRE SHUNT TRIP BREAKER (OPTIONAL)
4. WIRE UDS APPLIANCE KILL SWITCH, IF EQUIPPED (OPTIONAL)
5. WIRE GAS VALVE

ELECTRICAL CONTRACTOR REQUIREMENT

ITEM	CONNECTION IN PANEL	CONNECTION IN DEVICE	VOLTAGE	AMPERAGE	COMMENTS
SHUNT TRIP BREAKER (OPTIONAL)	ST & N1	BREAKER COIL (A1 & A2)	120 VAC	< 4 AMPS	ST TO A1 ON SHUNT BREAKER COIL, AND NEUTRAL TO A2 ON SHUNT TRIP BREAKER COIL
CONTROL PANEL POWER	H1 & N1 + GROUND	CIRCUIT BREAKER	120 VAC	15 AMPS	CONTROL PANEL POWER MUST NOT BE RUN THROUGH SHUNT TRIP BREAKER
UDS APPLIANCE KILL SWITCH (OPTIONAL)	KTS & N1	KTS & N1	120 VAC	< 4 AMPS	KILL SWITCH TERMINALS MUST BE IN SERIES WITH OTHER KILL SWITCHES
REMOTE 120VAC ANSUL AUTOMAN (OPTIONAL)	AU1, AU2	SOLENOID	120 VAC	< 6 AMPS	120V TO AU1, AU2 TO ANSUL ELECTRIC AUTOMAN. ANSUL SOLENOID TO NEUTRAL
GAS VALVE	LGV & N1D (IF 24 VDC) GAS & N1 (IF 120 VAC)	RED/RED/GREEN	24 VDC OR 120 VAC	< 1.0 AMPS	IF 24 VDC - 2 WIRES & GROUND, N1D TO RED, LGV TO RED, AND GREEN TO GROUND IF 120 VAC - 2 WIRES & GROUND GAS TO RED, N1 TO RED, AND GREEN TO GROUND

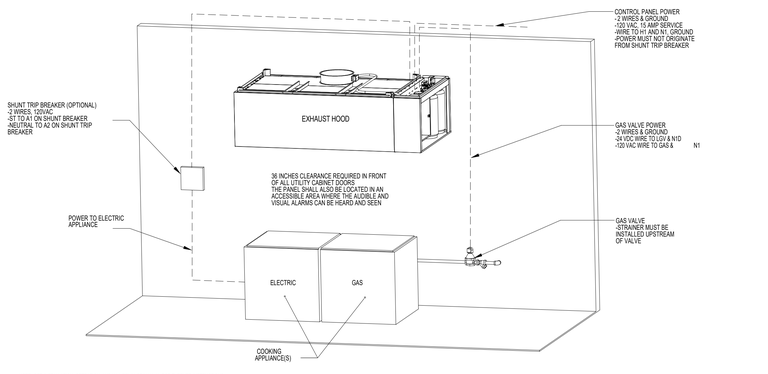

NOTE: SEE INSTALLATION, OPERATION, AND MAINTENANCE MANUAL FOR FURTHER INSTRUCTIONS

JOB NO	MODEL NUMBER	DRAWN BY	SCHEMATIC NO	DESCRIPTION OF OPERATION:
5927219	DCV-2111		INSTALL	Fire System #5 TANK FS - 4 G4.0.
	JOB NAME: White Plains High School	3/30/2023	ECP #1-16	

TANK PROTECTION LOW-VOLTAGE DETAIL

02/10/2021 Rev. 2

FS-5: SLAVE

ALARM CONTRACTOR:
1. WIRE MANUAL ACTUATION DEVICE(S), REMOTE FIRESTAT(S), CORE INTERLOCK(S), FIRE SENSOR(S) AND FIRE ALARM CONTACTS
2. COMPLETE FINAL HOOKUP OF SYSTEM
3. VERIFY FINAL FIRE SYSTEM TEST

ALARM CONTRACTOR REQUIREMENT

ITEM	CONNECTION IN PANEL	CONNECTION ON DEVICE	VOLTAGE	AMPERAGE	COMMENTS
MANUAL ACTUATION DEVICE(S)	101 AND 104 102 AND 103	1 & 2	24 VDC	< 1.0 AMPS	WIRE MANUAL ACTUATION DEVICE TERMINAL 1 BETWEEN CORE PANEL TERMINALS 102 AND 103 WIRE MANUAL ACTUATION DEVICE TERMINAL 2 BETWEEN CORE PANEL TERMINALS 101 AND 104 JUMPER 101 TO 104 AND 102 TO 103 IF NO MANUAL ACTUATION DEVICE IS INSTALLED
MANUAL ACTUATION DEVICE COVER	N/A	N/A	N/A	N/A	MANUAL ACTUATION DEVICE COVER MUST BE INSTALLED IF SURFACE MOUNTED, USE COVER EXTENSION ST1-6531B
REMOTE FIRESTAT SENSOR(S)	21 AND 24 22 AND 23	BLACK AND WHITE	24 VDC	< 1.0 AMPS	WIRE FIRE SENSOR WHITE WIRES BETWEEN HOOD CORE PANEL TERMINALS 22 AND 23 WIRE FIRE SENSOR BLACK WIRE BETWEEN HOOD CORE PANEL TERMINALS 21 AND 24 HIGH TEMP (842°F) #CW04427 (WHT) & #CW04427B (BLK)WIRE OR SIMILAR ONLY IF RAN OVER TOP OF HOOD. OTHERWISE BELDEN #6320UL OR SIMILAR PLENUM RATED WIRE. SEE FIGURE 1
FIRE ALARM CONTACT	AL1, AL2	VARIES	50V MAX (AC/DC)	UP TO 1 AMP	FIRE ALARM RELAY CONTACTS FOR BUILDING FIRE ALARM LOCATED IN THE CORE ELECTRICAL CONTROL PANEL
CORE INTERLOCK(S)	ILA, ILB, ILC	ILA, ILB, ILC	RS-485 COMMUNICATIONS SIGNAL		CORE SYSTEM (1) ILA, TO CORE SYSTEM (2) ILA. CORE SYSTEM (1) ILB, TO CORE SYSTEM (2) ILB. CORE SYSTEM (1) ILC, TO CORE SYSTEM (2) ILC. USE BELDEN# 88760 OR SIMILAR WIRE
TROUBLE CONTACT	TBC, TBL, TOK	VARIES	MAX 120 VAC	UP TO 6 AMPS	WIRE TO TBL & TBC NORMALLY OPEN CONTACT, CLOSES IN TROUBLE CONDITION
CORE COMMUNICATIONS CABLE	RJ-45 Jack	INTERNET CONNECTION	SIGNAL	<1.0 AMPS	TYPICAL CONNECTION CAT5 CABLE TO LOCAL AREA NETWORK VIA ETHERNET SWITCH OR WIRELESS ROUTER WITH VALID INTERNET CONNECTION

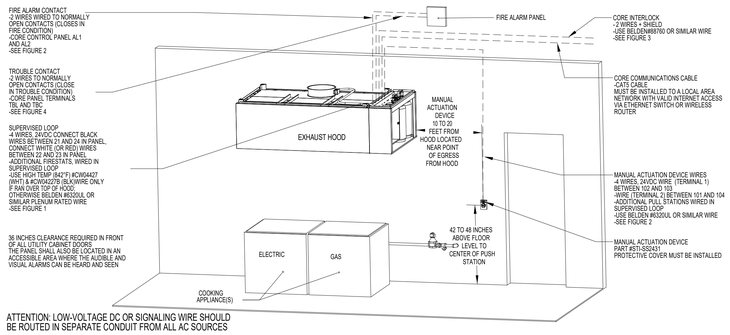

ATTENTION: LOW-VOLTAGE DC OR SIGNALING WIRE SHOULD BE ROUTED IN SEPARATE CONDUIT FROM ALL AC SOURCES

NOTE: SEE INSTALLATION, OPERATION, AND MAINTENANCE MANUAL FOR FURTHER INSTRUCTIONS

H2M architects + engineers
538 Broad Hollow Road, 4th Floor East
Melville, NY 11747
631.756.8000 • www.h2m.com
Land Surveying Certificate of Authorization No.: 0018178
Engineering Certificate of Authorization No.: 0018438

CONSULTANTS:

MARK	DATE	DESCRIPTION

STATE OF NEW YORK · BRIAN CASTELLI · 099167 · LICENSED PROFESSIONAL ENGINEER

DESIGNED BY:	DRAWN BY:	CHECKED BY:	REVIEWED BY:
RVS	RVS	BMC	"
PROJECT No: WPSD2203	DATE: FEBRUARY 2025	SCALE: AS SHOWN	

CLIENT
WHITE PLAINS CITY SCHOOL DISTRICT

HIGH SCHOOL ADDITION

White Plains Public Schools · REAL LIFE LEARNING

66-22-00-01-0-016-030

CONTRACT
CONTRACT M

STATUS
FINAL BID DOCUMENT

SHEET TITLE
HVAC BUILDING KITCHEN DETAILS SHEET 14 OF 15

DRAWING No.
M 513.00

C:\Users\bcastelli\Documents\WPSD2203_CentralZ1_M_bcastelli7RBCQ.rvt

3/21/2025 5:09:53 PM

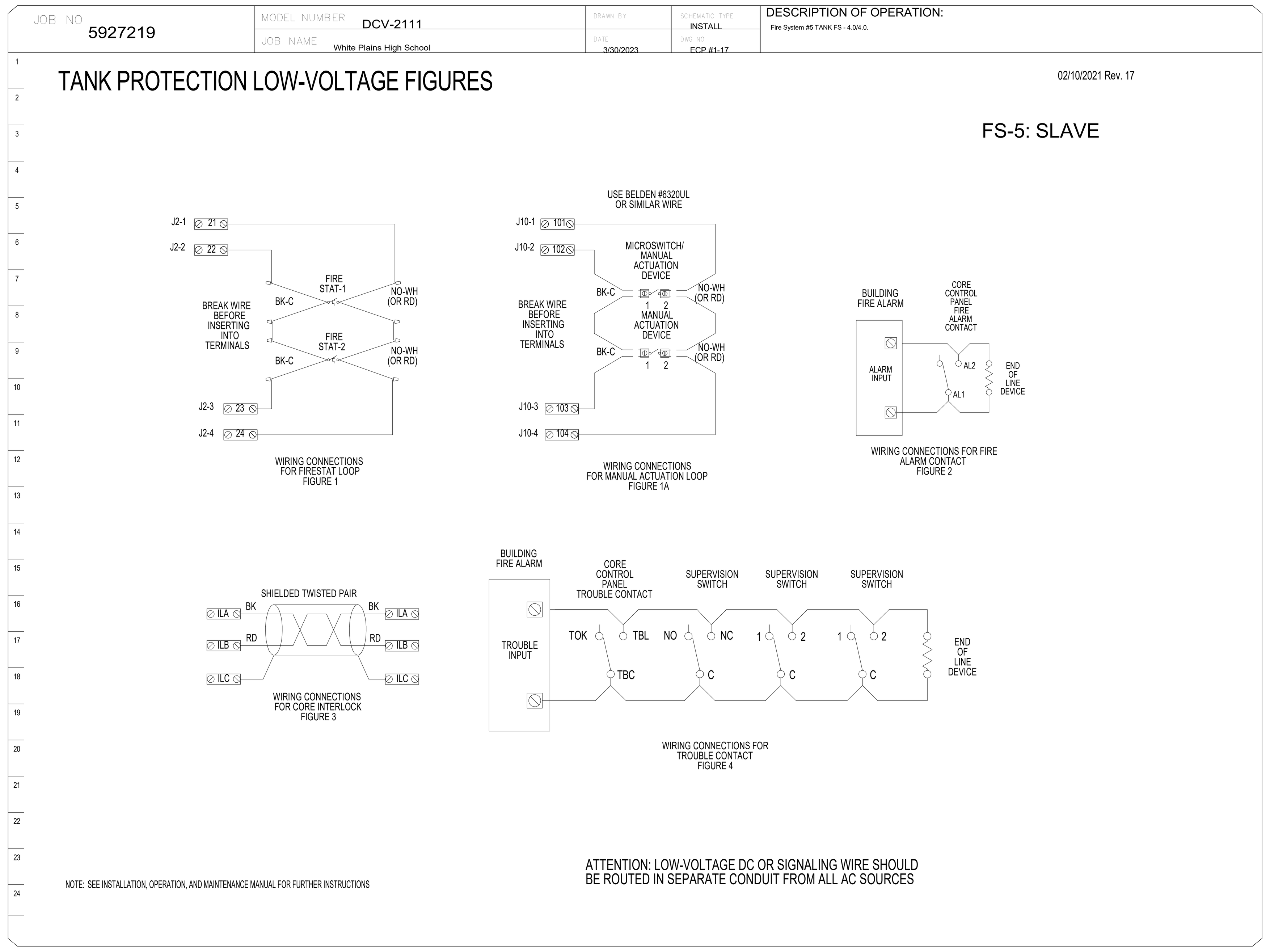

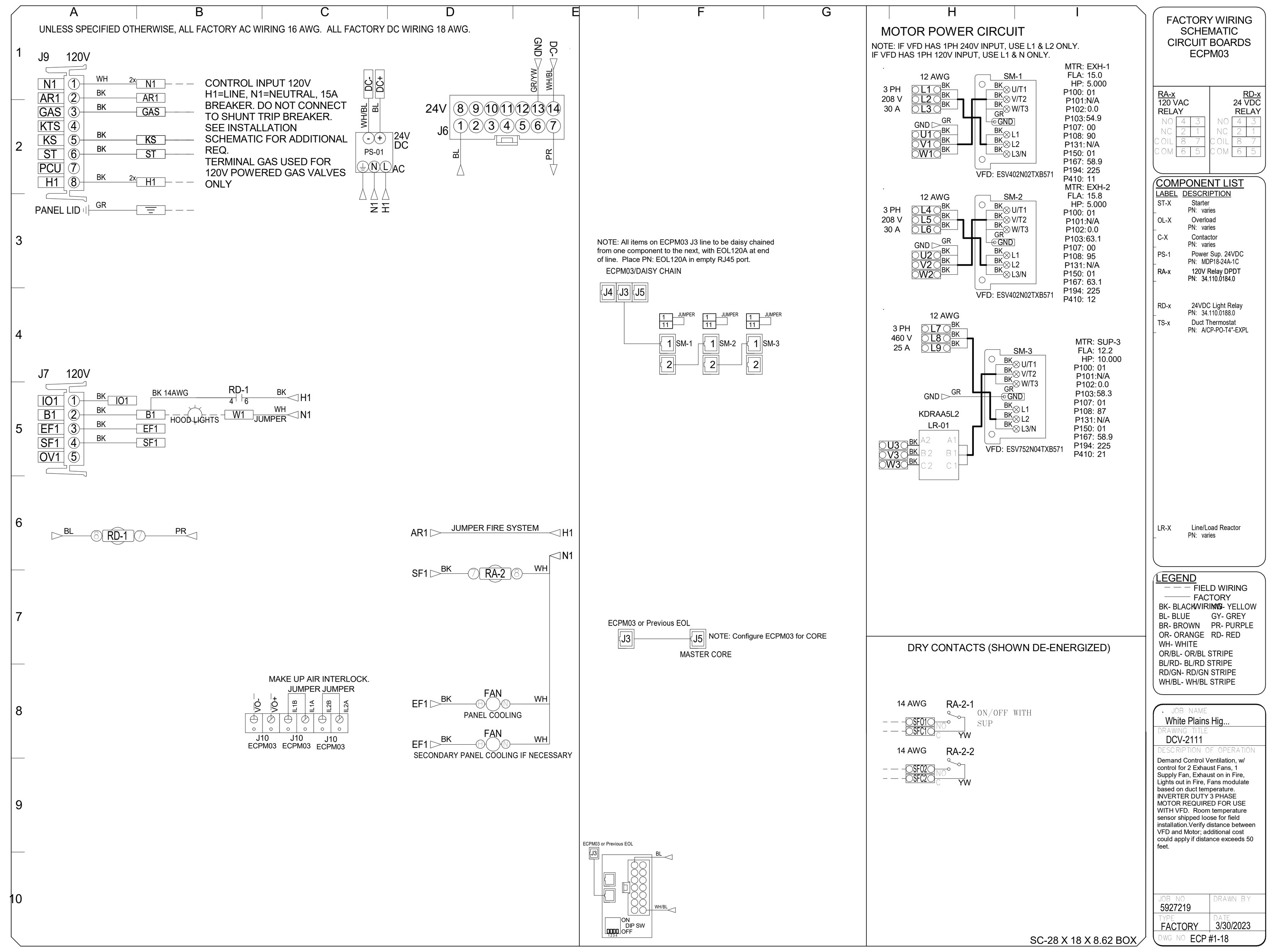

DEMAND CONTROL VENTILATION HOOD CONTROL PANEL SPECIFICATIONS:

- CONTROLS SHALL BE LISTED BY ETL (UL 508A) AND SHALL COMPLY WITH DEMAND VENTILATION SYSTEM TURNDOWN REQUIREMENTS OUTLINED IN IECC 403.2.8 (2015).
- THE CONTROL ENCLOSURE SHALL BE NEMA 1 RATED AND LISTED FOR INSTALLATION INSIDE OF THE EXHAUST HOOD UTILITY CABINET. THE CONTROL ENCLOSURE MAY BE CONSTRUCTED OF STAINLESS STEEL OR PAINTED STEEL.
- TEMPERATURE PROBE(S) LOCATED IN THE EXHAUST DUCT RISER(S) SHALL BE CONSTRUCTED OF STAINLESS STEEL.
- A DIGITAL CONTROLLER SHALL BE PROVIDED TO ACTIVATE THE HOOD EXHAUST FANS DYNAMICALLY BASED ON A FIXED DIFFERENTIAL BETWEEN THE AMBIENT AND DUCT TEMPERATURES SENSORS. THIS FUNCTION SHALL MEET THE REQUIREMENTS OF IMC 507.1.1.
- A DIGITAL CONTROLLER SHALL PROVIDE ADJUSTABLE HYSTERESIS SETTINGS TO PREVENT CYCLING OF THE FANS AFTER THE COOKING APPLIANCES HAVE BEEN TURNED OFF AND/OR THE HEAT IN THE EXHAUST SYSTEM IS REDUCED.
- A DIGITAL CONTROLLER SHALL PROVIDE AN ADJUSTABLE MINIMUM FAN RUN-TIME SETTING TO PREVENT FAN CYCLING.
- VARIABLE FREQUENCY DRIVES (VFDS) SHALL BE PROVIDED FOR FANS AS REQUIRED. THE DIGITAL CONTROLLER SHALL MODULATE THE VFDS BETWEEN A MINIMUM SETPOINT AND A MAXIMUM SETPOINT ON DEMAND. THE DUCT TEMPERATURE SENSOR INPUT(S) TO THE DIGITAL CONTROLLER SHALL BE USED TO CALCULATE THE SPEED REFERENCE SIGNAL.
- THE VFD SPEED RANGE OF OPERATION SHALL BE FROM 0% TO 100% FOR THE SYSTEM, WITH THE ACTUAL MINIMUM SPEED SET AS REQUIRED TO MEET MINIMUM VENTILATION REQUIREMENTS.
- AN INTERNAL ALGORITHM TO THE DIGITAL CONTROLLER SHALL MODULATE SUPPLY FAN VFD SPEED PROPORTIONAL TO ALL EXHAUST FANS THAT ARE LOCATED IN THE SAME FAN GROUP AS THE SUPPLY FAN.
- THE SYSTEM SHALL OPERATE IN PREP MODE DURING LIGHT COOKING LOAD OR COOL DOWN MODE WHEN SUFFICIENT HEAT REMAINS UNDERNEATH THE HOOD SYSTEM AFTER COOKING OPERATIONS HAVE COMPLETED. OPERATION DURING EITHER OF THESE PERIODS WILL DISABLE THE SUPPLY FANS AND PROVIDE AN EXHAUST FAN SPEED THAT IS EQUAL TO THE MINIMUM VENTILATION REQUIREMENT.
- A DIGITAL CONTROLLER SHALL DISABLE THE SUPPLY FAN(S), ACTIVATE THE EXHAUST FAN(S), ACTIVATE THE APPLIANCE SHUNT TRIP, AND DISABLE AN ELECTRIC GAS VALVE AUTOMATICALLY WHEN FIRE CONDITION IS DETECTED ON A COVERED HOOD.
- A DIGITAL CONTROLLER SHALL ALLOW FOR EXTERNAL BMS FAN CONTROL VIA DRY CONTACT (EXTERNAL CONTROL SHALL NOT OVERRIDE FAN OPERATION LOGIC AS REQUIRED BY CODE).
- AN LCD INTERFACE SHALL BE PROVIDED WITH THE FOLLOWING FEATURES:
  A. ON/OFF PUSH BUTTON FAN & LIGHT SWITCH ACTIVATION.
  B. INTEGRATED GAS VALVE RESET FOR ELECTRONIC GAS VALVES (NO RESET RELAY REQUIRED).
  C. VFD FAULT DISPLAY WITH AUDIBLE & VISUAL ALARM NOTIFICATION.
  D. DUCT TEMPERATURE SENSOR FAILURE DETECTION WITH AUDIBLE & VISUAL ALARM NOTIFICATION.
  E. MIS-WIRED DUCT TEMPERATURE SENSOR DETECTION WITH AUDIBLE & VISUAL ALARM NOTIFICATION.
  F. A SINGLE LOW VOLTAGE CAT-5 RJ45 WIRING CONNECTION.
  G. AN ENERGY SAVINGS INDICATOR THAT UTILIZES MEASURED KWH FROM THE VFDS.

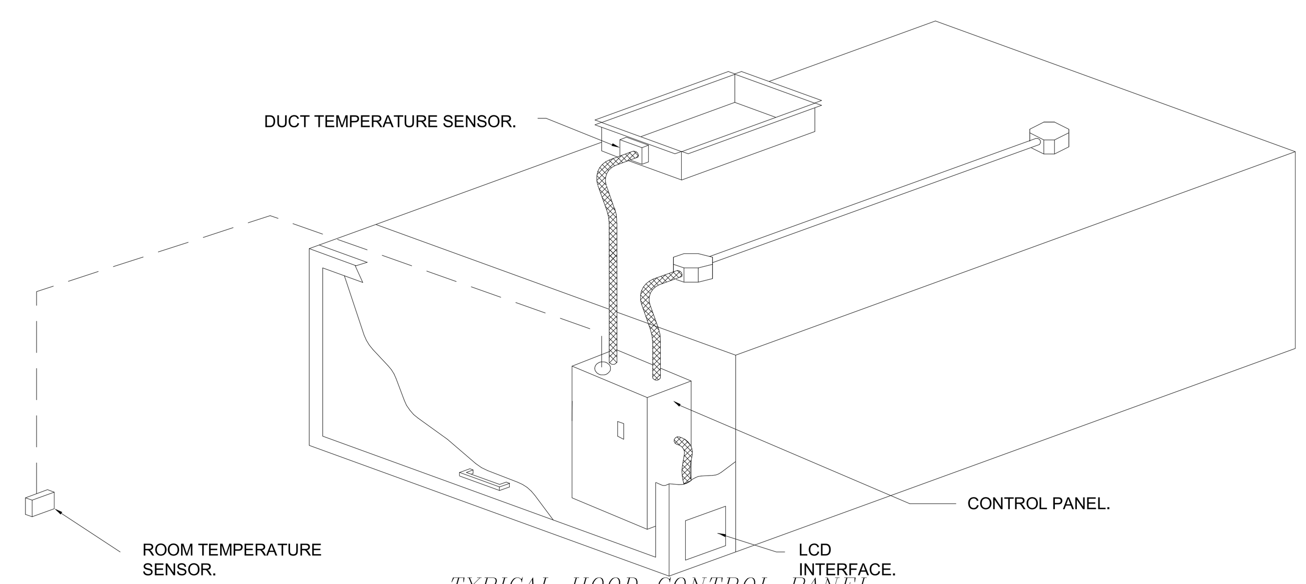

TYPICAL HOOD CONTROL PANEL INSTALLATION

SEQUENCE OF OPERATIONS:

THE HOOD CONTROL PANEL IS CAPABLE OF OPERATING IN ONE OR MORE OF THE FOLLOWING STATES AT ANY GIVEN TIME:

- AUTOMATIC: THE SYSTEM OPERATES BASED ON THE DIFFERENTIAL BETWEEN ROOM TEMPERATURE AND THE TEMPERATURE AT THE HOOD CAVITY OR EXHAUST DUCT COLLAR. FANS ACTIVATE AT A CONFIGURABLE TEMPERATURE DIFFERENTIAL THRESHOLD. DEPENDING ON THE JOB CONFIGURATION EACH FAN ZONE CAN BE CONFIGURED AS STATIC OR DYNAMIC. THESE TERMS REFER TO WHETHER A VARIABLE MOTOR (SUCH AS EC MOTORS OR VFD DRIVEN MOTORS) MODULATE WITH TEMPERATURE. IF THE PANEL IS EQUIPPED WITH VARIABLE SPEED FANS AND THE ZONE IS DEFINED AS "DYNAMIC", THESE WILL MODULATE WITHIN A USER-DEFINED RANGE BASED ON THE TEMPERATURE DIFFERENTIAL. PANELS EQUIPPED WITH VARIABLE SPEED FANS AND A FAN ZONE DEFINED AS "STATIC", FANS WILL RUN AT A SET SPEED CALCULATED FOR THE DRIVE. DEMAND CONTROL VENTILATION SYSTEMS ARE CAPABLE OF MODULATING EXHAUST AND MAKE UP AIR FAN SPEEDS PER THE REQUIREMENTS OUTLINED IN IECC 403.2.8.
- MANUAL:THE SYSTEM OPERATES BASED ON HUMAN INPUT FROM AN HMI.
- SCHEDULE: A WEEKLY SCHEDULE CAN BE SET TO RUN FANS FOR A SPECIFIED PERIOD THROUGHOUT THE DAY. THERE ARE THREE OCCUPIED TIMES PER DAY TO ALLOW FOR THE USER TO SET UP A TIME THAT IS SUITABLE TO THEIR NEEDS. ANY TIME THAT IS WITHIN THE DEFINED OCCUPIED TIME, THE SYSTEM WILL RUN AT MODULATION MODE AND FOLLOW THE FAN PROCEDURE ALGORITHM BASED ON TEMPERATURE DURING THIS TIME. DURING UNOCCUPIED TIME, THE SYSTEM WILL HAVE AN EXTRA OFFSET TO PREVENT UNINTENDED ACTIVATION OF THE SYSTEM DURING A TIME WHERE THE SYSTEM IS NOT BEING OCCUPIED.
- OTHER: THE SYSTEM OPERATES BASED ON THE INPUT FROM AN EXTERNAL SOURCE (DDC, BMS OR HARD-WIRED INTERLOCK).
- FIRE: UPON ACTIVATION OF THE HOOD FIRE SUPPRESSION SYSTEM, THE EXHAUST FAN WILL COME ON OR CONTINUE TO TO RUN, THE HOOD MAKEUP AIR WILL SHUTDOWN, AND A SIGNAL WILL BE SENT FOR ACTIVATING THE SHUNT TRIP BREAKER PROVIDED BY THE ELECTRICIAN. FUEL GAS WILL SHUT OFF VIA A MECHANICAL/ELECTRICAL GAS VALVE ACTUATED BY THE HOOD FIRE SUPPRESSION SYSTEM.

H2M architects + engineers
538 Broad Hollow Road, 4th Floor East
Melville, NY 11747
631.756.8000 • www.h2m.com
Land Surveying Certificate of Authorization No.: 0018178
Engineering Certificate of Authorization No.: 0018438

CONSULTANTS:

MARK	DATE	DESCRIPTION

STATE OF NEW YORK · BRIAN CASTELLI · 099167 · LICENSED PROFESSIONAL ENGINEER

DESIGNED BY: RVS	DRAWN BY: RVS	CHECKED BY: BMC	REVIEWED BY:
PROJECT No: WPSD2203	DATE: FEBRUARY 2025	SCALE: AS SHOWN	

CLIENT
WHITE PLAINS CITY SCHOOL DISTRICT

HIGH SCHOOL ADDITION

66-22-00-01-0-016-030

CONTRACT
CONTRACT M

STATUS
FINAL BID DOCUMENT

SHEET TITLE
HVAC
BUILDING
KITCHEN DETAILS SHEET 15 OF 15

DRAWING No.
M 514.00

C:\Users\bcastelli\Documents\WPSD2203_Central21_M_bcastelli7RBCQ.rvt
3/21/2025 5:09:54 PM

ELECTRICAL LEGEND

SYMBOL	DESCRIPTION	COMMENTS
S_3	THREE - WAY SWITCH	46" AFF TO CL UON
S_4	FOUR - WAY SWITCH	46" AFF TO CL UON
S_I	ILLUMINATED SWITCH	46" AFF TO CL UON
S^A	SINGLE POLE SWITCH; "A" INDICATES SWITCH CONTROL	46" AFF TO CL UON
S_D	SINGLE POLE DIMMER SWITCH	46" AFF TO CL UON
S_{3D}	THREE - WAY DIMMER SWITCH	46" AFF TO CL UON
S_K	SINGLE POLE KEYED SWITCH	46" AFF TO CL UON
S_{K3}	KEYED THREE - WAY SWITCH	46" AFF TO CL UON
S_{K4}	KEYED FOUR - WAY SWITCH	46" AFF TO CL UON
S_M	HORSEPOWER RATED SWITCH, WITH INDICATOR (CONTRACTOR SHALL COORDINATE VOLTAGE AND PHASE WITH EQUIPMENT)	46" AFF
S_P	SWITCH AND PILOT LIGHT	
S_T	SWITCH WITH THERMAL OVERLOAD PROTECTION (CONTRACTOR SHALL COORDINATE VOLTAGE AND PHASE WITH EQUIPMENT)	
S_{OS}	OCCUPANCY SENSOR WITH MANUAL OVERRIDE, WALL MOUNT	
TC	TIME CLOCK	
PC	PHOTOCELL	
PB	PUSH BUTTON	
E,G	EMERGENCY SHUT OFF SWITCH; 'E' INDICATES ELECTRICAL; 'G' INDICATES GAS	
OS	OCCUPANCY SENSOR, CEILING MOUNT	
	OCCUPANCY SENSOR POWER PACK, MOUNTED ABOVE CEILING	
	2 #12 AWG + #12 AWG GND IN 3/4" E.C. CONCEALED IN WALL OR CEILING	
	5 #12 AWG + #12 AWG GND IN 3/4" E.C. CONCEALED IN WALL OR CEILING	
	3 #12 AWG + #12 AWG GND IN 3/4" E.C. CONCEALED IN OR BELOW SLAB	
LP1-35	DEDICATED HOME RUN TO PANEL LP1 FOR CIRCUIT No. 35 ONLY. 2 #12 AWG + #12 AWG GND IN 3/4" E.C. CONCEALED IN WALL OR CEILING	
	SIMPLEX RECEPTACLE: 120V, 20A. COORDINATE MOUNTING HEIGHT WITH MECHANICAL CONTRACTOR TO CLEAR BASEBOARDS.	FLUSH
	DUPLEX RECEPTACLE: 120V, 20A. COORDINATE MOUNTING HEIGHT WITH MECHANICAL CONTRACTOR TO CLEAR BASEBOARDS.	FLUSH
	QUAD RECEPTACLE, DOUBLE DUPLEX RECEPTACLE: 120V, 20A. COORDINATE MOUNTING HEIGHT WITH MECHANICAL CONTRACTOR TO CLEAR BASEBOARDS.	FLUSH
C	DUPLEX RECEPTACLE: 120V, 20A; SUBSCRIPT "C" INDICATES CEILING MOUNT.	FLUSH
	DUPLEX RECEPTACLE: 120V, 20A; FLOOR MOUNTED.	FLUSH
IG	ISOLATED GROUND DUPLEX RECEPTACLE. COORDINATE MOUNTING HEIGHT WITH MECHANICAL CONTRACTOR TO CLEAR BASEBOARDS.	FLUSH
GFI	DUPLEX RECEPTACLE: 120V, 20A; WITH GROUND FAULT INDICATOR. COORDINATE MOUNTING HEIGHT WITH MECHANICAL CONTRACTOR TO CLEAR BASEBOARDS.	FLUSH
UC	DUPLEX RECEPTACLE: 120V, 20A; SUBSCRIPT "UC" INDICATES UNDER COUNTER	AS PER ENGINEER
CT	DUPLEX RECEPTACLE: 120V, 20A; SUBSCRIPT "CT" INDICATES COUNTER TOP.	AS PER ENGINEER
WP	DUPLEX RECEPTACLE: 120V, 20A; SUBSCRIPT "WP" INDICATED WEATHER PROOF	AS PER ENGINEER
50 240	SPECIAL PURPOSE OUTLET: 240V, 50A. VERIFY NEMA CONFIGURATION WITH EQUIPMENT MANUFACTURER.	AS PER ENGINEER
TL	TWISTED LOCK RECEPTACLE: 125V, 20A, 3 WIRE; UNLESS OTHERWISE NOTED.	AS PER ENGINEER
	SURFACE RACEWAY WITH 2 GROUNDED AND ISOLATED TYPE DUPLEX RECEPTACLES AND 1 DATA OUTLET PER POSITION, 18" AFF UNLESS OTHERWISE NOTED.	
	TELEPHONE/POWER POLE	
S1	MAGNETIC STARTER "S1"; SEE STARTER SCHEDULE	
DS1	DISCONNECTION SWITCH "DS1"; SEE DISCONNECT SWITCH SCHEDULE.	
J	JUNCTION BOX	
J_{4X}	NEMA 4X STAINLESS STEEL JUNCTION BOX WITH GASKET COVER.	
J_S	JUNCTION BOX RECESSED IN WALL WITH BLANK COVER, PROVIDE 3/4" E.C. AND DRAG LINE TO ABOVE FINISHED CEILING. MOUNT 18" AFF, UNLESS OTHERWISE NOTED.	
J_{CCTV}	FOR CCTV, JUNCTION BOX RECESSED IN WALL WITH BLANK COVER. PROVIDE ONE (1) CAT-6 CABLE IN 3/4" E.C. TO INDEPENDENT DISTRIBUTION FRAMEWORK.	
J_M	FOR MONITOR, JUNCTION BOX RECESSED IN WALL WITH BLANK COVER. PROVIDE 3/4" E.C. AND DRAG LINE TO ABOVE FINISHED CEILING.	
T_{T1}	TRANSFORMER "T1"; SEE TRANSFORMER SCHEDULE.	
	ELECTRICAL PANEL "P1", RECESSED; SEE PANEL SCHEDULE.	
P1	ELECTRICAL PANEL "P1", SURFACE MOUNT; SEE PANEL SCHEDULE.	
	CONDUIT GOING UP.	
	CONDUIT GOING DOWN.	
	PULLBOX	
T	TELEPHONE. PROVIDE AND INSTALL CAT 6 CABLE IN 3/4" E.C. TO ONT. PROVIDE AND INSTALL A RJ45 JACK AND FACEPLATE. ALL TELEPHONE DROPS SHALL BE RECESSED MOUNTED, UNLESS OTHERWISE NOTED. CONTRACTOR SHALL BE RESPONSIBLE FOR ALL FINAL TERMINATION. COORDINATE EXACT TERMINATION WITH OWNER PRIOR TO TERMINATION. LABEL CABLES WITH ROOM NUMBER.	
TV	CABLE TELEVISION. PROVIDE COAXIAL CABLE IN 3/4" E.C. TO NETWORK SWITCH IN NEAREST ONT. AND BOX RECESSED IN WALL WITH COAXIAL COVER.	
#D	DATA. PROVIDE AND INSTALL CAT 6 CABLE IN 3/4" E.C. TO ONT ASSOCIATED TO ROOM. PROVIDE AND INSTALL A RJ45 JACK AND FACEPLATE. ALL DATA DROPS SHALL BE RECESSED MOUNTED, UNLESS OTHERWISE NOTED. CONTRACTOR SHALL BE RESPONSIBLE FOR ALL FINAL TERMINATION. COORDINATE EXACT TERMINATION WITH SCHOOL PRIOR TO TERMINATION. LABEL CABLES WITH ROOM NUMBER/NAME AT THE ONT. REFER TO FLOOR PLANS FOR APPROXIMATE LOCATIONS OF ALL ONT. NUMBER CORRESPONDS TO THE NUMBER OF DATA DROPS AND CABLES. IF NO NUMBER, ASSUME ONE (1) DROP.	
ET	ELEVATOR TELEPHONE JACK. PROVIDE CAT 6 CABLE IN 3/4" E.C. TO ONT. PROVIDE AND INSTALL TELEPHONE JACK AND FACEPLATE. ALL FINAL TERMINATION TO ONT BY CONTRACTOR.	

ABBREVIATION	DESCRIPTION
AFF	ABOVE FINISH FLOOR
AFC	ABOVE FINISH CEILING
AFG	ABOVE FINISH GRADE
AMP, A	AMPERE
ATS	AUTOMATIC TRANSFER SWITCH; SEE TRANSFER SWITCH SCHEDULE
AWG	AMERICAN WIRE GAUGE
BFC	BELOW FINISHED CEILING
CL	CENTERLINE
CT	COUNTERTOP
EC	ELECTRICAL CONDUIT
GFCI	GROUND FAULT CIRCUIT INTERRUPTER
GFI	GROUND FAULT INDICATOR
CONED	CONSOLIDATED EDISON (LOCAL ELECTRIC UTILITY)
MCB	MAIN CIRCUIT BREAKER
MLO	MAIN LUGS ONLY
NTS	NOT TO SCALE
UON	UNLESS OTHERWISE NOTED
UC	UNDERCOUNTER
V	VOLTS
VAC	VOLTS ALTERNATING CURRENT
VDC	VOLT DIRECT CURRENT
X-FMR	TRANSFORMER
WP	WEATHERPROOF

SYMBOL	DESCRIPTION	COMMENTS
T	LINE VOLTAGE THERMOSTAT, 120V, 10A.	
	CIRCUIT BREAKER WITH TRIP AND POLES AS NOTED.	
TS1	TRANSFER SWITCH TS1; SEE TRANSFER SWITCH SCHEDULE.	
M.C.B 30A/2P PANEL "P1"	DISTRIBUTION PANEL P1 WITH 30A, 2 POLE M.C.B.; SEE DISTRIBUTION PANEL SCHEDULE.	
	DISCONNECT SWITCH DS1, 100A, 3 POLES; SEE DISCONNECT SWITCH SCHEDULE.	
DS3 100A/3P	FUSED DISCONNECT SWITCH DS2, FUSED AT 40A, 3 POLES; SEE DISCONNECT SWITCH SCHEDULE.	
G1	GENERATOR SET G1	
M	ELECTRIC METER AND METER PAN AS PER CONED REQUIREMENTS.	
5	MOTOR, NUMBER INDICATED HORSEPOWER.	
	CURRENT TRANSFORMER.	
PTS	VOLTAGE TRANSFORMER.	
T2	TRANSFORMER WITH SIZE, PRIMARY AND SECONDARY VOLTAGES AS NOTED.	
RVRM 10	REDUCED VOLTAGE SOLID STATE RAMPING MODULE, SIZED FOR 10 H.P.	
RVSS 150	REDUCED VOLTAGE SOLID STATE STARTER, SIZED FOR 150 H.P.	
VFD 25	VARIABLE FREQUENCY DRIVE, RATED FOR 25 H.P.	
FVNR 5	FULL VOLTAGE NON-REVERSING STARTER, NEMA SIZE 6	
FVR 5	FULL VOLTAGE REVERSING STARTER, NEMA SIZE 5	
JJS	FAST ACTING SOLID STATE FUSES AS PER MANUFACTURER.	
	MULTIPLE BRANCH CIRCUITS AS REQUIRED.	
	CONTROL CIRCUIT; MIN 2 #12 AWG IN 3/4" E.C.	

SYMBOLS LEGEND

100	ROOM DESIGNATION
5 A2.2	BUILDING SECTION CUT
5 A2.2	WALL SECTION CUT
5 A2.2	DETAIL KEY
5 A2.2	ELEVATION KEY
H	COLUMN GRID
	ELEVATION LINE
1 Title SCALE:	DRAWING TITLE
4 3 5 A2.2 1 2	INTERIOR ELEVATION REFERENCE
# #	SEE NOTE # ON DWG #

SITE PLAN LEGEND

	CURB
	UTILITY POWER/TELEPHONE POLE
	EXISTING NATURAL GAS SERVICE
	EXISTING SEWER SERVICE
	EXISTING WATER SERVICE
	EXISTING TELEPHONE SERVICE
	NEW TELEPHONE SERVICE
	EXISTING ELECTRICAL LINES
	NEW ELECTRICAL LINES
	EXISTING PRIMARY ELECTRIC SERVICE
	NEW PRIMARY ELECTRIC SERVICE
OH/E	EXISTING OVERHEAD ELECTRIC LINES
	EXISTING FENCE
	ELECTRIC PULL BOX
HH	HANDHOLE
T	TRANSFORMER

ELECTRICAL GENERAL NOTES:

G1. CONTRACTOR SHALL INCLUDE ALL WORK REQUIRED TO COMPLETE THIS PROJECT IN BASE BID, UON. NO ADDITIONAL MONIES WILL BE PROVIDED FOR OVERTIME TIME REQUIRED TO COMPLETE THIS WORK NOR FOR MULTIPLE WORK SHIFTS PER DAY.

G2. VERIFY PHASE ROTATION OF ALL EXISTING, TEMPORARY, AND NEW EQUIPMENT TO ENSURE PROPER ROTATION.

G3. ALL WORK SHALL BE COORDINATED WITH CON EDISON PRIOR TO INSTALLATION OF NEW ELECTRICAL SERVICE

G4. PROVIDE ADDITIONAL SETS OR OVERSIZED LUGS AS REQUIRED TO MAKE ALL TERMINATIONS.

G5. PROVIDE TEMPORARY LIGHTING AS REQUIRED TO FACILITATE THE WORK OF THIS CONTRACT.

G6. FOR ALL CONTROLS WHICH BECOME DISCONNECTED AS A RESULT OF DEMOLITION, EXTEND WIRING AND CONDUIT TO MATCH EXISTING, UON.

G7. THE EXISTING SINGLE LINE DIAGRAM HAS BEEN CREATED USING EXISTING DRAWINGS AND/OR BY COMPLETING FIELD SURVEYS. PRIOR TO BEGINNING WORK, THE CONTRACTOR SHALL VERIFY THE PARTIAL EXISTING SINGLE LINE DIAGRAM. THE CONTRACTOR SHALL PROVIDE THE OWNER/ENGINEER WITH AN UPDATED SINGLE LINE PRIOR TO BEGINNING ANY CONSTRUCTION WORK.

COMMUNICATION LEGEND

SYMBOL	DESCRIPTION	COMMENTS
CS A ONT	SURFACE WALL MOUNTED COMBINATION IP CLOCK/SPEAKER - SUBSCRIPT "ONT" REPRESENTS OPTICAL NETWORK TERMINAL. - SUBSCRIPT "A" REPRESENTS THE ONT TO TERMINATE TO. PROVIDE AND INSTALL CAT6 CABLE IN 3/4" E.C. TO CORRESPONDING ONT. - CLOCK/SPEAKER PROVIDED BY SCHOOL DISTRICT AND INSTALLE BY CONTRACTOR.	
A1 SP	WALL MOUNTED ANALOG SPEAKER. - SUBSCRIPT "A" REPRESENTS CORRESPONDING GATEWAY CONTROLLER. "1" REPRESENTS GATEWAY CHANNEL AND POWER SUPPLY CHANNEL. -SPEAKER PROVIDED BY SCHOOL DISTRICT AND INSTALLED BY CONTRACTOR.	
G A ONT	WALL MOUNTED CARD ACCESSS GATEWAY -CONTRACTOR SHALL MOUNT AT 11'-0" AFF UNLESS OTHERWISE NOTED -SUBSCRIPT REPRESENTS THE ONT TO TERMINATE TO. PROVIDE AND INSTALL CAT6 CABLE IN 3/4" E.C. TO CORRESPONDING ONT. PUNCH DOWN TO PATCH PANEL. PROVIDE AND INSTALL 6'-0" CAT6 PATCH CABLE BETWEEN PATCH PANEL AND 24-PORT ONT. PROVIDE AND INSTALL NEW PATCH PANEL AND NEW ONT AS PER FLOOR PLANS. -GATEWAY PROVIDED BY SCHOOL DISTRICT AND INSTALLED BY CONTRACTOR.	
PH A ONT	WALL MOUNTED IP TELEPHONE. - SUBSCRIPT "ONT" REPRESENTS OPTICAL NETWORK TERMINAL. - SUBSCRIPT "A" REPRESENTS THE DISTRIBUTION FRAME TO TERMINATE TO. PROVIDE AND INSTALL CAT6 CABLE IN 3/4" E.C. TO CORRESPONDING ONT. - TELEPHONE PROVIDED BY SCHOOL DISTRICT AND INSTALLED BY CONTRACTOR.	
HN A WP ONT	EXTERIOR WEATHERPROOF WALL MOUNTED IP PAGING HORN. -SUBSCRIPT REPRESENTS THE ONT TO TERMINATE TO. PROVIDE AND INSTALL CAT6 CABLE IN 3/4" E.C. TO CORRESPONDING ONT. PUNCH DOWN TO PATCH PANEL. PROVIDE AND INSTALL 6'-0" CAT6 PATCH CABLE BETWEEN PATCH PANEL AND 24-PORT ONT. PROVIDE AND INSTALL NEW PATCH PANEL AND NEW ONT AS PER FLOOR PLANS. - MOUNT AT APPROXIMATELY 10'-0" ON THE EXTERIOR OF THE BUILDING. PROVIDE ALL MOUNTING HARDWARE AS REQUIRED. HORN PROVIDED BY SCHOOL DISTRICT AND INSTALLED BY CONTRACTOR.	

NETWORK LEGEND

SYMBOL	DESCRIPTION	COMMENTS
4 A	POWER OVER ETHERNET (POE) OPTICAL NETWORK TERMINA (ONT) (4 PORT). WALL MOUNTED AT 40" AFF. LETTER CORRESPONDS TO DATA DROP LOCATION. PLUG INTO NEW WALL MOUNTED RECEPTACLE (SHOWN ON CORRESPONDING POWER PLAN) UON. ONT PROVIDED BY SCHOOL DISTRICT AND INSTALLED BY CONTRACTOR. PATCH CABLES BETWEEN ONT AND EQUIPMENT SHALL BE PROVIDED AND INSTALLED BY CONTRACTOR.	
8 A	POWER OVER ETHERNET (POE) OPTICAL NETWORK TERMINAL (ONT) (8 PORT). WALL MOUNTED AT 40" AFF. LETTER CORRESPONDS TO DATA DROP LOCATION. PLUG INTO NEW WALL MOUNTED RECEPTACLE (SHOWN ON CORRESPONDING POWER PLAN) UON. ONT PROVIDED BY SCHOOL DISTRICT AND INSTALLED BY CONTRACTOR. PATCH CABLES BETWEEN ONT AND EQUIPMENT SHALL BE PROVIDED AND INSTALLED BY CONTRACTOR.	
24 A 9	24 PORT POWER OVER ETHERNET (POE) OPTICAL NETWORK TERMINAL (ONT). LETTER CORRESPONDS TO DATA DROP LOCATION. NUMBER CORRESPONDS TO QUANTITY OF CCTY, ACCESS CONTROL, BMS, AND/OR TELEPHONE DROPS TO BE EXTENDED FROM EXISTING NETWORK SWITCH TO NEW ONT BY CONTRACTOR. IF NO NUMBER, ASSUME NO DROPS TO BE EXTENDED TO NEW ONT. PLUG INTO NEW WALL MOUNTED RECEPTACLE, SHOWN ON CORRESPONDING POWER PLAN. ONT PROVIDED BY SCHOOL DISTRICT AND INSTALLED BY CONTRACTOR. PATCH CABLES BETWEEN ONT AND EQUIPMENT SHALL BE PROVIDED AND INSTALLED BY CONTRACTOR.	
FS	FIBER OPTICAL SPLITTER. SPLITTER AND ASSOCIATED ENCLOSURE PROVIDED BY SCHOOL DISTRICT AND INSTALLED BY CONTRACTOR. CONTRACTOR SHALL POPULATE ENCLOSURE WITH SPLITTERS, TERMINATE FIBER TO SPLITTERS AND LABEL ALL CABLES.	
A WAP	WIRELESS ACCESS POINT (WAP) MOUNTED ON CEILING, UON. LETTER CORRESPOND TO ONT. WIRELESS ACCESS POINT PROVIDED BY SCHOOL DISTRICT AND INSTALLED BY CONTRACTOR. PROVIDE AND INSTALL CAT6 CABLE IN 3/4" E.C. BETWEEN WAP AND ONT, UON.	

H2M architects + engineers

538 Broad Hollow Road, 4th Floor East
Melville, NY 11747
631.756.8000 ▪ www.h2m.com
Land Surveying Certificate of Authorization No.: 0018178
Engineering Certificate of Authorization No.: 0018438

CONSULTANTS:

MARK	DATE	DESCRIPTION

STATE OF NEW YORK · ANTHONY WOONGJIN KIM · 092583 · LICENSED PROFESSIONAL ENGINEER

06/30/2027 Exp. Date
ANTHONY WOONGJIN KIM, P.E.
NY PROFESSIONAL ENGINEER Lic. No. 092583
"ALTERATION OF THIS DOCUMENT EXCEPT BY A LICENSED PROFESSIONAL IS ILLEGAL"

DESIGNED BY:	DRAWN BY:	CHECKED BY:	REVIEWED BY:
LL	LL		

PROJECT No:	DATE:	SCALE:
WPSD2203	FEBRUARY 2025	AS SHOWN

CLIENT

WHITE PLAINS CITY SCHOOL DISTRICT

HIGH SCHOOL ADDITION

66-22-00-01-0-016-030

CONTRACT

CONTRACT E
ELECTRICAL CONSTRUCTION

STATUS

FINAL BID DOCUMENT

SHEET TITLE

GENERAL NOTES AND LEGENDS

DRAWING No.

E 001.00

C:\Users\mvoltz\Documents\WPSD2203_Central21_M_mvoltz25ZVF.rvt
3/21/2025 3:26:04 PM

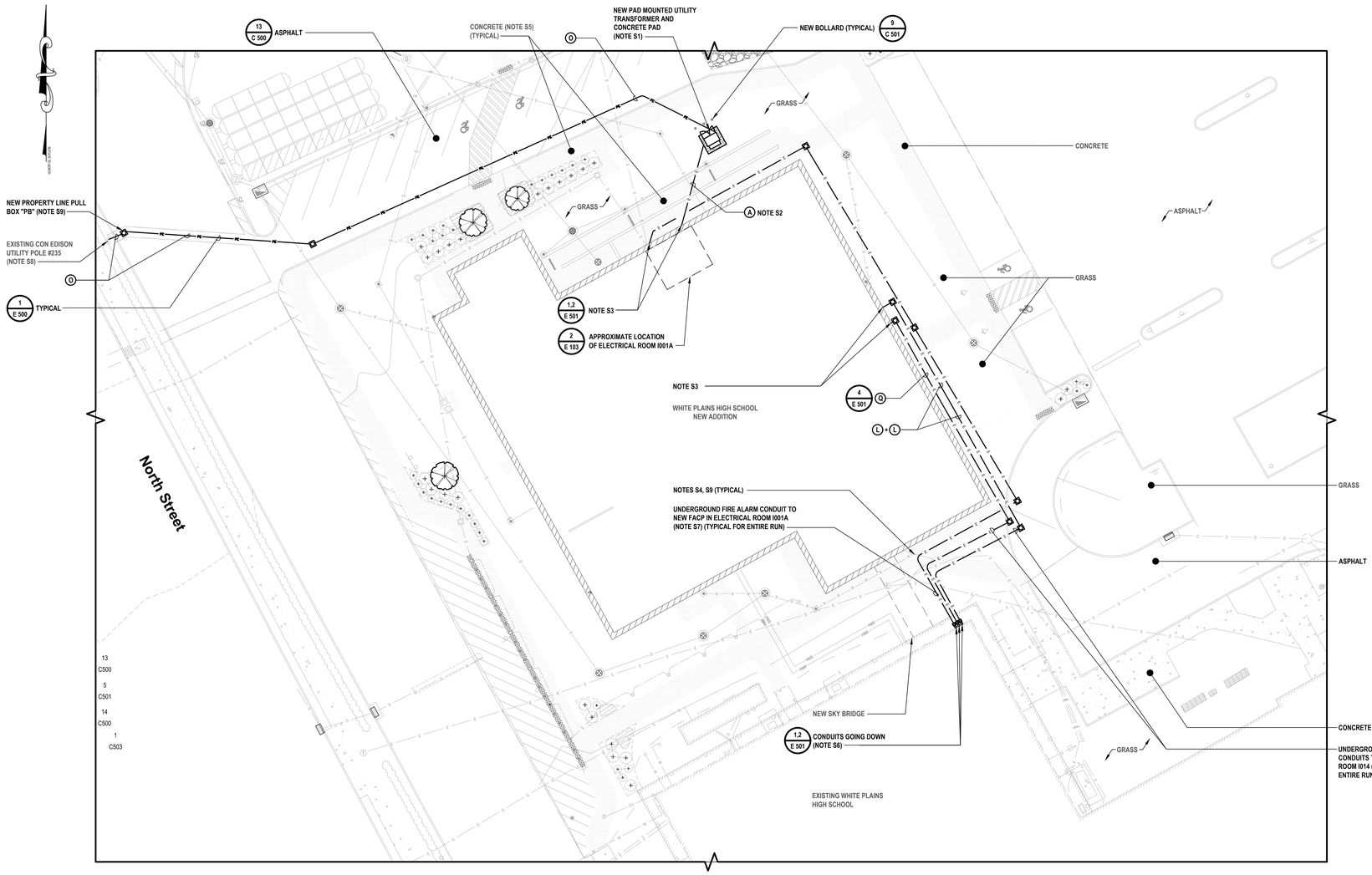

1 Electrical Site Power Plan

SCALE: 1"=20'

GRAPHIC SCALE

20 0 10 20

(IN FEET)
1 inch = 20 ft.

ELECTRICAL GENERAL SITE PLAN NOTES:

GS1. CONTRACTOR SHALL INSPECT CONSTRUCTION SITE PRIOR TO SUBMISSION OF BIDS AND SHALL MAKE NO ADDITIONAL CLAIMS REGARDING SITE CONDITIONS THEREAFTER.

GS2. LOCATION OF ALL UNDERGROUND UTILITIES BOTH PUBLIC AND CUSTOMER OWNED, WERE OBTAINED FROM EITHER MAPS, SURVEYS, DRAWINGS AND RECORDS SUPPLIED BY OTHERS. THE SCHOOL DISTRICT AND ENGINEER DO NOT GUARANTEE OR ACCEPT RESPONSIBILITY FOR ANY DAMAGE TO SUCH FACILITIES DUE TO DISCREPANCIES IN LOCATION AND SIZE SHOWN ON THE PLANS OR THOSE UTILITIES NOT SHOWN. THE CONTRACTOR IS RESPONSIBLE FOR OBTAINING A PUBLIC (811) AND PRIVATE MARKOUT FOR DETERMINING THE LOCATION OF ALL UNDERGROUND UTILITIES PRIOR TO BEGINNING WORK. CONTRACTOR SHALL LOCATE ALL UTILITIES WITHIN PROXIMITY OF CONSTRUCTION LIMITS.

GS3. CONTRACTOR SHALL COMPLETELY RESTORE ALL AREAS DISTURBED DURING CONSTRUCTION, INCLUDING BUT NOT LIMITED TO GRASS AREAS, LANDSCAPING, PAVEMENTS, SIDEWALKS, CURBING AND IN-GROUND SPRINKLER SYSTEMS.

GS4. THE CONTRACTOR SHALL PERFORM DAILY CLEAN-UP OPERATIONS WHICH INCLUDE REMOVAL OF DEBRIS AND EXCESS CONSTRUCTION MATERIAL TO THE SATISFACTION OF THE SCHOOL DISTRICT AND THE ENGINEER.

GS5. DURING ALL NON-WORKING HOURS, THE CONTRACTOR WILL BE REQUIRED TO STORE ALL EQUIPMENT AND MATERIALS WITHIN THE AREA DESIGNATED BY THE ENGINEER AT THE PROJECT SITE.

GS6. PROVIDE TEMPORARY FENCING TO PROTECT WORK AREAS.

GS7. CONTRACTOR SHALL MINIMIZE REMOVAL OF EXISTING TREES. CONTRACTOR SHALL BE RESPONSIBLE FOR SITE LAYOUT, TAGGING AND REMOVAL OF TREES REQUIRED TO COMPLETE ALL WORK. OWNER SHALL APPROVE TREES TO BE REMOVED PRIOR TO ACTUAL REMOVALS. REMOVALS SHALL INCLUDE REMOVAL OF COMPLETE STUMP AND ROOT SYSTEM. CONTRACTOR NOT PERMITTED TO GRIND STUMPS.

GS8. FOR ALL WIRE AND CONDUIT WITH # DESIGNATION, REFER TO SHEET E 610 FOR FEEDER SCHEDULE FOR ALL WIRE AND CONDUIT SIZES AND QUANTITIES.

GS9. DURING ALL NON-WORKING HOURS, THE CONTRACTOR WILL BE REQUIRED TO STORE ALL EQUIPMENT AND MATERIALS WITHIN THE AREA DESIGNATED BY THE ENGINEER AT THE PROJECT SITE.

GS10. CONTRACTOR SHALL BE RESPONSIBLE FOR ALL LAYOUT SURVEY, ETC. AS REQUIRED TO COMPLETE THE WORK.

GS11. CONCRETE SIDEWALKS SHALL BE SAWCUT BACK TO EXPANSION CONTROL JOINTS.

GS12. CONTRACTOR SHALL PROVIDE AND TEMPORARILY INSTALL TRAFFIC RATED STEEL PLATES OVER ALL TRENCHES SUCH THAT TRAFFIC AND WALKING PATTERNS ARE MINIMALLY DISTURBED. PROVIDE AND INSTALL TRAFFIC SIGNS AND SIDEWALK SIGNS AS REQUIRED TO DIRECT TRAFFIC OF PEDESTRIANS AND AUTOMOBILES.

GS13. CONDUIT RUNS AND PULL BOXES THAT ARE SHOWN ARE DIAGRAMMATICAL AND FOR REFERENCE ONLY. CONTRACTOR TO FIELD VERIFY ALL CONDUIT ROUTINGS ON SITE. IT IS THE RESPONSIBILITY OF THE CONTRACTOR TO COORDINATE RUNS WITH ALL TRADES, DISTRICT, AND EXISTING PIPING AND UTILITIES IN FIELD. PROPOSED CONDUIT ROUTING SHALL BE SUBMITTED TO ENGINEER FOR REVIEW DURING SHOP DRAWING PHASE PRIOR TO ANY INSTALLATION. ELECTRICAL AS-BUILT DRAWINGS, SHOWING CONDUIT RUNS AND CIRCUITING MUST BE GIVEN TO THE ARCHITECT, ENGINEER AND DISTRICT AT THE COMPLETION OF THE JOB.

GS14. CONTRACTOR SHALL PROVIDE AND INSTALL SEPARATE PULL BOXES FOR POWER AND FIRE ALARM CONDUITS. POWER AND FIRE ALARM SHALL NOT BE RAN THROUGH THE SAME PULL BOX.

ELECTRICAL SITE PLAN KEY NOTES:

S1. NEW UTILITY PAD MOUNTED TRANSFORMER AS PER UTILITY REQUIREMENTS. CONTRACTOR SHALL PROVIDE AND INSTALL UTILITY APPROVED PAD. UTILITY SHALL FURNISH NEW TRANSFORMER. COORDINATE WITH UTILITY FOR ALL REQUIREMENTS RELATED TO NEW ELECTRICAL SERVICE INSTALLATION.

S2. ALL HORIZONTAL CONDUITS BETWEEN THE NEW UTILITY PAD MOUNTED TRANSFORMER AND THE EXISTING BUILDING SHALL BE INSTALLED 24" BELOW GRADE MINIMUM. CONDUITS SHALL BE PITCHED DOWN AND AWAY FROM BUILDING.

S3. CONTRACTOR SHALL STUB ALL CONDUITS INTO BUILDINGS BELOW GRADE. NO EXTERIOR CONDUITS PERMITTED TO RUN EXPOSED ON EXTERIOR WALLS. SEAL ALL CONDUIT PENETRATIONS WITH LINK SEALS AND DUCT SEALS.

S4. NEW PULL BOX. SITE PLAN SHOWS MINIMUM REQUIRED PULL BOXES. PROVIDE ADDITIONAL PULL BOXES AS REQUIRED BY NEC AND UTILITY SERVICE.

S5. SAWCUT EXISTING PAVEMENT/SIDEWALK/CURBING FOR INSTALLATION OF NEW CONDUITS. REMOVE AND DISPOSE OF ALL DEBRIS.

S6. CONTRACTOR SHALL STUB ALL CONDUITS INTO EXISTING BUILDINGS ABOVE GRADE, COORDINATE EXACT HEIGHT IN FIELD WITH ARCHITECT/ENGINEER. SEAL ALL CONDUIT PENETRATIONS WITH NON-SHRINK GROUT. REFER TO SHEET EX 100 FOR WIRE CONTINUATION.

S7. NO BLOCKS AND LB FITTINGS ARE ALLOWED ON CONDUIT USED FOR FIBER OPTIC CABLING. PULL BOXES SHALL BE PLACED EVERY 100 FT. IN A STRAIGHT CONDUIT RUN. THE INSIDE RADIUS OF ANY BEND IN THE CONDUIT SHALL BE AT LEAST EIGHT (8) TIMES THE INTERNAL DIAMETER. ONLY APPROVED PULL LUBRICANTS ARE TO BE USED AT ANY TIME. REFER TO SHEET FA001 FOR WIRE INFORMATION.

S8. NEW ELECTRIC SERVICE RISER AS PER UTILITY REQUIREMENTS

S9. PROVIDE NEW PROPERTY LINE PULL BOX AS PER UTILITY REQUIREMENT.

H2M architects + engineers

538 Broad Hollow Road, 4th Floor East
Melville, NY 11747
631.756.8000 • www.h2m.com
Land Surveying Certificate of Authorization No.: 0018178
Engineering Certificate of Authorization No.: 0018438

CONSULTANTS:

MARK	DATE	DESCRIPTION

STATE OF NEW YORK · ANTHONY WOONGJIN KIM · 086392 · LICENSED PROFESSIONAL ENGINEER

ANTHONY WOONGJIN KIM, P.E.
BY PROFESSIONAL ENGINEER LIC. No. 086392

06/30/2027 Exp. Date

"IN THE ORIGINAL OR THIS DOCUMENT EXCEPT BY A LICENSED PROFESSIONAL ENGINEER, IS A CRIME."

DESIGNED BY:	DRAWN BY:	CHECKED BY:	REVIEWED BY:
LL	LL		

PROJECT No:	DATE:	SCALE:
WPSD2203	FEBRUARY 2025	AS SHOWN

CLIENT

WHITE PLAINS CITY SCHOOL DISTRICT

HIGH SCHOOL ADDITION

White Plains Public Schools · WP · REAL LIFE LEARNING

66-22-00-01-0-016-030

CONTRACT

CONTRACT E
ELECTRICAL CONSTRUCTION

STATUS

FINAL BID DOCUMENT

SHEET TITLE

ELECTRICAL SITE PLAN

DRAWING No.

ES 100.00

C:\Users\mwalk2\Documents\WPSD2203_CentralH21_M_mwalk2ZZV.rvt

3/21/2025 3:29:27 PM

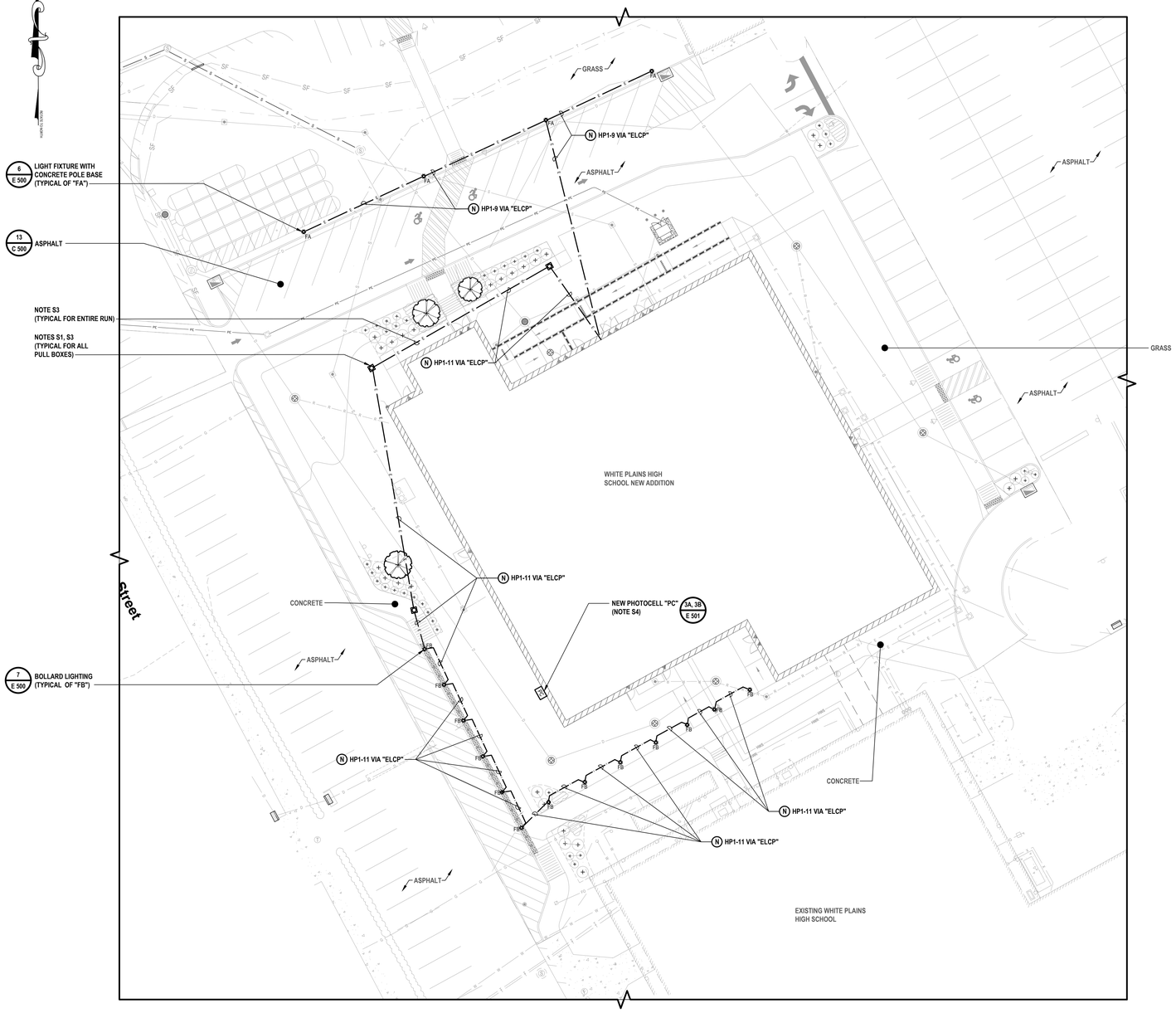

1 Electrical Site Lighting Plan

SCALE: 1"=20'

GRAPHIC SCALE

20 0 10 20

(IN FEET)
1 inch = 20 ft.

ELECTRICAL GENERAL SITE PLAN NOTES:

GS1. CONTRACTOR SHALL INSPECT CONSTRUCTION SITE PRIOR TO SUBMISSION OF BIDS AND SHALL MAKE NO ADDITIONAL CLAIMS REGARDING SITE CONDITIONS THEREAFTER.

GS2. LOCATION OF ALL UNDERGROUND UTILITIES BOTH PUBLIC AND CUSTOMER OWNED, WERE OBTAINED FROM EITHER MAPS, SURVEYS, DRAWINGS AND RECORDS SUPPLIED BY OTHERS. THE SCHOOL DISTRICT AND ENGINEER DO NOT GUARANTEE OR ACCEPT RESPONSIBILITY FOR ANY DAMAGE TO SUCH FACILITIES DUE TO DISCREPANCIES IN LOCATION AND SIZE SHOWN ON THE PLANS OR THOSE UTILITIES NOT SHOWN. THE CONTRACTOR IS RESPONSIBLE FOR OBTAINING A PUBLIC (811) AND PRIVATE MARKOUT FOR DETERMINING THE LOCATION OF ALL UNDERGROUND UTILITIES PRIOR TO BEGINNING WORK. CONTRACTOR SHALL LOCATE ALL UTILITIES WITHIN PROXIMITY OF CONSTRUCTION LIMITS.

GS3. CONTRACTOR SHALL COMPLETELY RESTORE ALL AREAS DISTURBED DURING CONSTRUCTION, INCLUDING BUT NOT LIMITED TO GRASS AREAS, LANDSCAPING, PAVEMENTS, SIDEWALKS, CURBING AND IN-GROUND SPRINKLER SYSTEMS.

GS4. THE CONTRACTOR SHALL PERFORM DAILY CLEAN-UP OPERATIONS WHICH INCLUDE REMOVAL OF DEBRIS AND EXCESS CONSTRUCTION MATERIAL TO THE SATISFACTION OF THE SCHOOL DISTRICT AND THE ENGINEER.

GS5. DURING ALL NON-WORKING HOURS, THE CONTRACTOR WILL BE REQUIRED TO STORE ALL EQUIPMENT AND MATERIALS WITHIN THE AREA DESIGNATED BY THE ENGINEER AT THE PROJECT SITE.

GS6. PROVIDE TEMPORARY FENCING TO PROTECT WORK AREAS.

GS7. CONTRACTOR SHALL MINIMIZE REMOVAL OF EXISTING TREES. CONTRACTOR SHALL BE RESPONSIBLE FOR SITE LAYOUT, TAGGING AND REMOVAL OF TREES REQUIRED TO COMPLETE ALL WORK. OWNER SHALL APPROVE TREES TO BE REMOVED PRIOR TO ACTUAL REMOVALS. REMOVALS SHALL INCLUDE REMOVAL OF COMPLETE STUMP AND ROOT SYSTEM. CONTRACTOR NOT PERMITTED TO GRIND STUMPS.

GS8. FOR ALL WIRE AND CONDUIT WITH (#) DESIGNATION, REFER TO SHEET E 610 FOR FEEDER SCHEDULE FOR ALL WIRE AND CONDUIT SIZES AND QUANTITIES.

GS9. DURING ALL NON-WORKING HOURS, THE CONTRACTOR WILL BE REQUIRED TO STORE ALL EQUIPMENT AND MATERIALS WITHIN THE AREA DESIGNATED BY THE ENGINEER AT THE PROJECT SITE.

GS10. CONTRACTOR SHALL BE RESPONSIBLE FOR ALL LAYOUT SURVEY, ETC. AS REQUIRED TO COMPLETE THE WORK.

GS11. CONCRETE SIDEWALKS SHALL BE SAWCUT BACK TO EXPANSION CONTROL JOINTS.

GS12. CONTRACTOR SHALL PROVIDE AND TEMPORARILY INSTALL TRAFFIC RATED STEEL PLATES OVER ALL TRENCHES SUCH THAT TRAFFIC AND WALKING PATTERNS ARE MINIMALLY DISTURBED. PROVIDE AND INSTALL TRAFFIC SIGNS AND SIDEWALK SIGNS AS REQUIRED TO DIRECT TRAFFIC OF PEDESTRIANS AND AUTOMOBILES.

ELECTRICAL SITE PLAN KEY NOTES:

S1. NEW PULL BOX. SITE PLAN SHOWS MINIMUM REQUIRED PULL BOXES. PROVIDE ADDITIONAL PULL BOXES AS REQUIRED BY NEC.

S2. CONTRACTOR SHALL STUB ALL CONDUITS INTO BUILDINGS BELOW GRADE. NO EXTERIOR CONDUITS PERMITTED TO RUN EXPOSED ON EXTERIOR WALLS. SEAL ALL CONDUIT PENETRATIONS WITH LINK SEALS AND DUCT SEALS. RESTORE ALL FLOOR FINISHES WITH NEW CONCRETE. RESTORE FLOOR FINISHED TO MATCH EXISTING.

S3. CONDUIT RUNS AND PULL BOXES THAT ARE SHOWN ARE DIAGRAMMATICAL AND FOR REFERENCE ONLY. CONTRACTOR TO FIELD VERIFY ALL CONDUIT ROUTINGS ON SITE. IT IS THE RESPONSIBILITY OF THE CONTRACTOR TO COORDINATE RUNS WITH ALL TRADES, DISTRICT, AND PIPING AND UTILITIES IN FIELD. PROPOSED CONDUIT ROUTING SHALL BE SUBMITTED TO ENGINEER FOR REVIEW DURING SHOP DRAWING PHASE PRIOR TO ANY INSTALLATION. ELECTRICAL AS-BUILT DRAWINGS, SHOWING CONDUIT RUNS AND CIRCUITING MUST BE GIVEN TO THE ARCHITECT, ENGINEER AND DISTRICT AT THE COMPLETION OF THE JOB.

S4. PHOTOCELL SHALL BE MOUNTED ON THE EXTERIOR OF THE BUILDING AT ROOF LINE. CONTRACTOR SHALL LOCATE PHOTOCELL SO IT IS NOT ACTIVATED BY ALL ADJACENT LIGHT FIXTURES. CONTRACTOR TO VERIFY THE PHOTOCELL MOUNTING HEIGHT WITH DISTRICT IN FIELD.

H2M architects + engineers

538 Broad Hollow Road, 4th Floor East
Melville, NY 11747
631.756.8000 • www.h2m.com
Land Surveying Certificate of Authorization No.: 0018178
Engineering Certificate of Authorization No.: 0018438

CONSULTANTS:

MARK	DATE	DESCRIPTION

STATE OF NEW YORK · ANTHONY WOONGJIN KIM · 087362 · LICENSED PROFESSIONAL ENGINEER

06/30/2027
ANTHONY WOONGJIN KIM, P.E. Exp. Date
NY PROFESSIONAL ENGINEER Lic. No. 087362
"ALTERATION OF THIS DOCUMENT EXCEPT BY A LICENSED PROFESSIONAL IS A VIOLATION OF THE LAW"

DESIGNED BY:	DRAWN BY:	CHECKED BY:	REVIEWED BY:
LL	LL		
PROJECT No: WPSD2203	DATE: FEBRUARY 2025	SCALE: AS SHOWN	

CLIENT

WHITE PLAINS CITY SCHOOL DISTRICT

HIGH SCHOOL ADDITION

66-22-00-01-0-016-030

CONTRACT

CONTRACT E
ELECTRICAL CONSTRUCTION

STATUS

FINAL BID DOCUMENT

SHEET TITLE

ELECTRICAL SITE LIGHTING PLAN

DRAWING No.

ES 101.00

C:\Users\mvitt2\Documents\WPSD2203_Central21_M_mvitt2kSZKVF.rvt
3/21/2025 3:29:31 PM

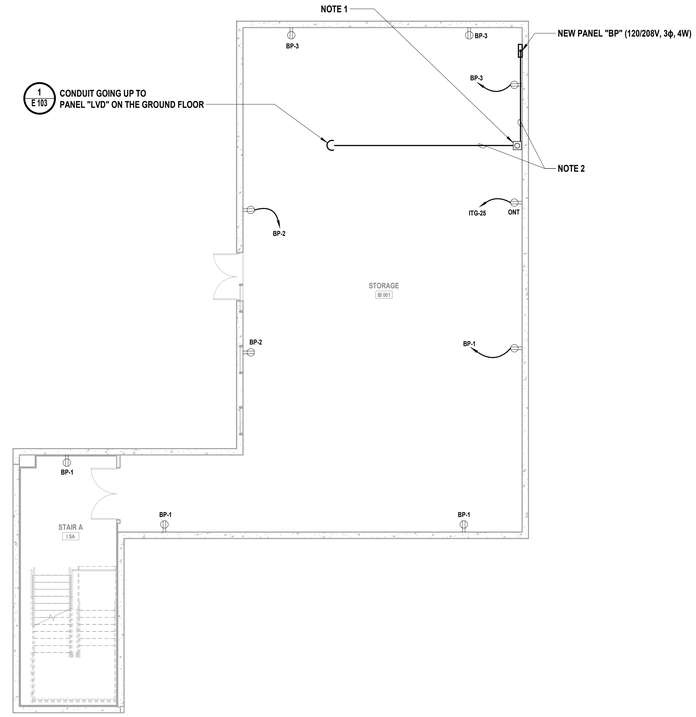

1 **Electrical Basement Power Plan**
SCALE: 1/8" = 1'-0"

ELECTRICAL KEY NOTES:

1. NEW PULL BOX. FLOOR PLAN SHOWS MINIMUM REQUIRED PULL BOXES. PROVIDE ADDITIONAL PULL BOXES AS REQUIRED BY NEC.
2. CONTRACTOR SHALL ROUTE CONDUIT ON CEILING STRUCTURE. PROVIDE AND INSTALL ALL MOUNTING HARDWARE AND ACCESSORIES AS REQUIRED.

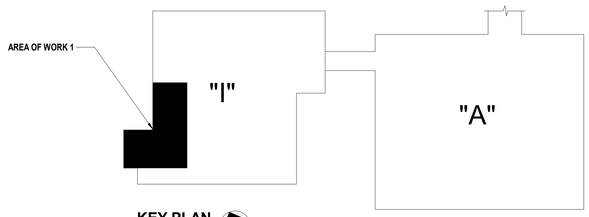

KEY PLAN
SCALE: NTS

H2M architects + engineers
538 Broad Hollow Road, 4th Floor East
Melville, NY 11747
631.756.8000 • www.h2m.com
Land Surveying Certificate of Authorization No.: 0018178
Engineering Certificate of Authorization No.: 0018438

CONSULTANTS:

MARK	DATE	DESCRIPTION

STATE OF NEW YORK
ANTHONY WOONGJIN KIM
092583
LICENSED PROFESSIONAL ENGINEER

06/30/2027
Exp. Date

ANTHONY WOONGJIN KIM, P.E.
NY PROFESSIONAL ENGINEER Lic. No. 092583
"AS TRACTION OF THIS DOCUMENT EXCEPT BY LICENSED PROFESSIONAL IS A LICENSE"

DESIGNED BY:	DRAWN BY:	CHECKED BY:	REVIEWED BY:
LL	LL		
PROJECT No:	DATE:	SCALE:	
WPSD2203	FEBRUARY 2025	AS SHOWN	

CLIENT
WHITE PLAINS CITY SCHOOL DISTRICT

HIGH SCHOOL ADDITION

66-22-00-01-0-016-030

CONTRACT
CONTRACT E
ELECTRICAL CONSTRUCTION

STATUS
FINAL BID DOCUMENT

SHEET TITLE
ELECTRICAL BASEMENT POWER PLAN

DRAWING No.
E 100.00

C:\Users\mvoltz\Documents\WPSD2203_Central21_M_mvoltz252VF.rvt
3/21/2025 3:26:05 PM

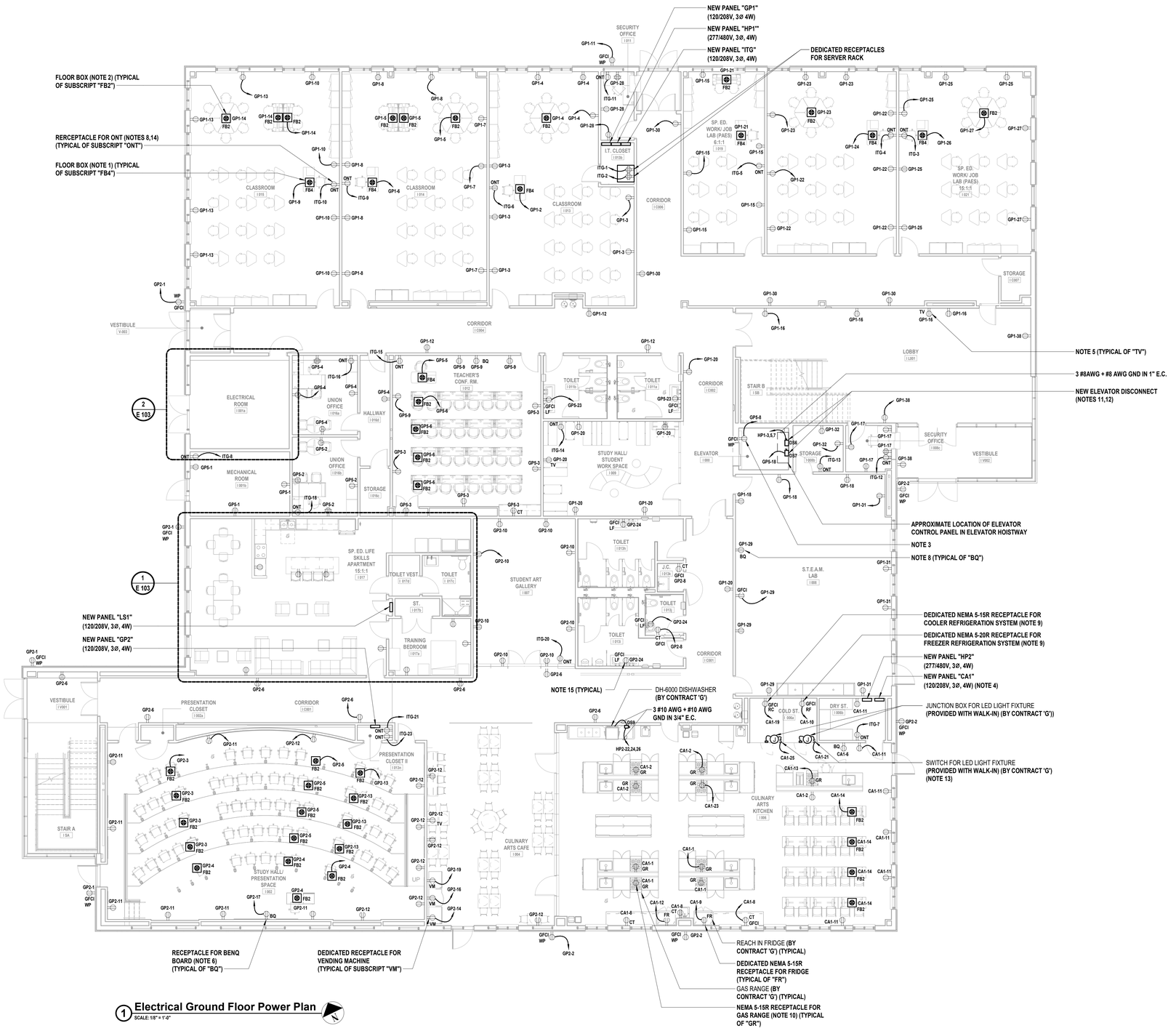

1 Electrical Ground Floor Power Plan
SCALE: 1/8" = 1'-0"

ELECTRICAL KEY NOTES:

1. CONTRACTOR SHALL COORDINATE WITH CONTRACT 'G' TO INSTALL NEW FLOOR BOX. NEW FLOOR BOX SHALL INCLUDE THREE (3) DUPLEX RECEPTACLES AND ONE DATA DROP (FLOOR BOX SHALL BE LEGRAND "EFB4" OR APROVED EQUAL. PROVIDE AND INSTALL ALL MOUNTING FRAMES AND COMPONENTS AS REQUIRED). COORDINATE EXACT LOCATION WITH ARCHITECT PRIOR TO INSTALLATION. REFER TO ASSOCIATED LOW VOLTAGE PLAN FOR ADDITIONAL INFORMATION.
2. CONTRACTOR SHALL COORDINATE WITH CONTRACT 'G' TO INSTALL NEW FLOOR BOX. NEW FLOOR BOX SHALL INCLUDE TWO (2) DUPLEX RECEPTACLES (FLOOR BOX SHALL BE LEGRAND "EFB2" OR APROVED EQUAL. PROVIDE AND INSTALL ALL MOUNTING FRAMES AND COMPONENTS AS REQUIRED). COORDINATE EXACT LOCATION WITH ARCHITECT PRIOR TO INSTALLATION.
3. CONTRACTOR SHALL MOUNT GFCI RECEPTACLE IN ELEVATOR PIT, BELOW THE LOWEST HEIGHT OF ELEVATOR TRAVEL. CONTRACTOR SHALL VERIFY EXACT MOUNTING LOCATION WITH ELEVATOR INSTALLER.
4. CONTRACTOR SHALL PROVIDE AND INSTALL ONE (1) NEW 100A/3p ASCO 920 CONTACTOR IN PANEL "CA1" TO CONTROL UNDER HOOD POWER. NEW 100A/3P ASCO 920 CONTACTOR SHALL CONTROL THE BUS FOR NINE (9) 20A/1P CIRCUIT BREAKERS TO FEED GAS RANGES IN CULINARY ARTS ROOM.
5. CONTRACTOR SHALL MOUNT ALL RECEPTACLES WITH SUBSCRIPT "TV" AT 6'-0" AFF. COORDINATE EXACT MOUNTING LOCATION AND HEIGHT WITH ARCHITECT PRIOR TO INSTALLATION.
6. DEDICATED RECEPTACLE FOR BENQ. CONTRACTOR SHALL MOUNT ALL RECEPTACLES WITH SUBSCRIPT "BQ" AT 3'-0" AFF. COORDINATE EXACT MOUNTING LOCATION AND HEIGHT WITH ARCHITECT PRIOR TO INSTALLATION.
7. CONTRACTOR SHALL PROVIDE AND INSTALL S.O. CORD AND PLUG RATED AT 240V TO MATCH RECEPTACLE AS REQUIRED.
8. DEDICATED CIRCUIT FOR OPTICAL NETWORK TERMINAL (ONT). REFER TO ASSOCIATED LOW VOLTAGE PLAN FOR ADDITIONAL INFORMATION. CONTRACTOR SHALL NOTE PANELS "ITG" AND "IT1" ARE SERVED BY PANEL "EGP" (BACKED UP BY EMERGENCY GENERATOR). VERIFY EXACT MOUNTING LOCATION AND HEIGHT WITH SCHOOL DISTRICT PRIOR TO INSTALLATION.
9. DEDICATED RECEPTACLE FOR REFRIGERATION SYSTEM. FOR ALL RECEPTACLES WITH SUBSCRIPT "RC" AND "RF", CONTRACTOR SHALL COORDINATE ALL EXACT MOUNTING LOCATION AND HEIGHT WITH ARCHITECT AND MANFACTURER'S REQUIREMENTS PRIOR TO INSTALLATION.
10. RECEPTACLES SERVING THE GAS RANGE SHALL BE RECESSED INTO THE HALF WALL. WIRE AND CONDUIT SHALL BE INSTALLED BELOW SLAB. PROVIDE ALL HARDWARE AND ACCESSORIES AS REQUIRED. COORDINATE WITH KITCHEN EQUIPMENT INSTALLER PRIOR TO INSTALLATION. ALL CIRCUITS UNDER THE KITCHEN HOOD SHALL DE-ENERGIZE UPON ACTIVATION OF THE ANSUL SYSTEM.
11. CONTRACTOR SHALL COORDINATE EXACT MOUNTING HEIGHT AND LOCATION WITH ELEVATOR INSTALLER AND ARCHITECT IN FIELD PRIOR TO INSTALLATION.
12. CONTRACTOR SHALL PROVIDE AND INSTALL ALL WIRE, CONDUIT, AND ACCESSORIES AS REQUIRED TO TERMINATE POWER FEED TO NEW ELEVATOR VIA DISONNECT SWITCH. COORDINATE EXACT TERMINATION LOCATION WITH ELEVATOR INSTALLER PRIOR TO INSTALLATION.
13. CONTRACTOR SHALL PROVIDE ALL WIRING AND CONDUIT TO LED FIXTURE VIA SWITCH WITH PILOT LIGHT (PROVIDED WITH WALK-IN)
14. CONTRACTOR SHALL PROVIDE AND INSTALL NEW VINYL LABEL ABOVE NEW RECEPTACLE STATING "DEDICATED RECEPTACLE FOR ONT, ONLY".
15. CONTRACTOR SHALL COORDINATE EXACT MOUNTING HEIGHT AND LOCATION WITH SINK INSTALLER PRIOR TO INSTALLING NEW RECEPTACLE.

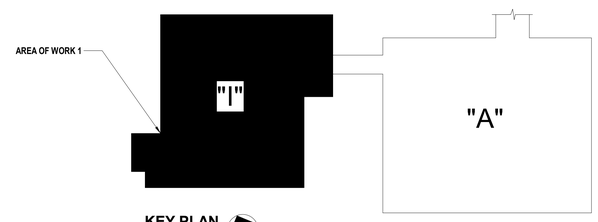

KEY PLAN
SCALE: NTS

H2M architects + engineers
538 Broad Hollow Road, 4th Floor East
Melville, NY 11747
631.756.8000 • www.h2m.com
Land Surveying Certificate of Authorization No.: 0018178
Engineering Certificate of Authorization No.: 0018438

CONSULTANTS:

MARK	DATE	DESCRIPTION

STATE OF NEW YORK · ANTHONY WOONGJIN KIM · 063032 · LICENSED PROFESSIONAL ENGINEER

ANTHONY WOONGJIN KIM, P.E.
Exp. Date 06/30/2027
IN PROFESSIONAL ENGINEER LIC. No. 063032
"ALTERATION OF THIS DOCUMENT EXCEPT BY LICENSED PROFESSIONAL IS A VIOLATION"

DESIGNED BY:	DRAWN BY:	CHECKED BY:	REVIEWED BY:
LL	LL	LK	-
PROJECT No: WPSD2203	DATE: FEBRUARY 2025	SCALE: AS SHOWN	

CLIENT
WHITE PLAINS CITY SCHOOL DISTRICT

HIGH SCHOOL ADDITION

White Plains Public Schools · WP · REAL LIFE LEARNING

66-22-00-01-0-016-030

CONTRACT
CONTRACT E ELECTRICAL CONSTRUCTION

STATUS
FINAL BID DOCUMENT

SHEET TITLE
ELECTRICAL GROUND FLOOR POWER PLAN

DRAWING No.
E 101.00

C:\Users\mwitz\Documents\WPSD2203_Contract2_M_mwitz2SZKVF.rvt
3/21/2025 3:26:06 PM

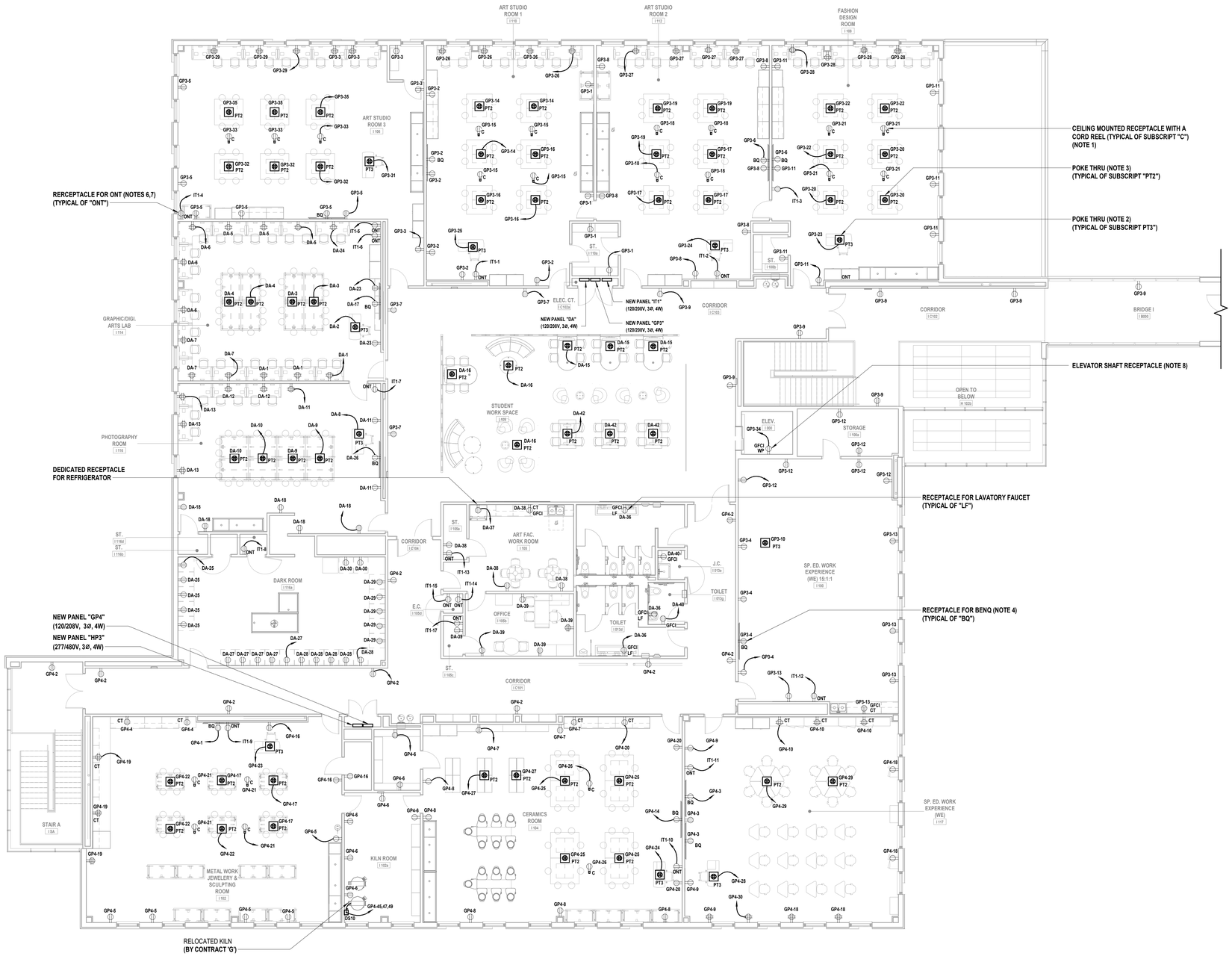

1 **Electrical First Floor Power Plan**
SCALE: 1/8" = 1'-0"

ELECTRICAL KEY NOTES:

1. CONTRACTOR SHALL PROVIDE AND INSTALL NEW CEILING MOUNTED CORD REEL TO THE BUILDING STRUCTURE AS PER MANUFACTURERS RECOMMENDATION. CORD REEL SHALL BE HUBBELL MODEL NO. HBL125123R220M1 OR APPROVED EQUAL. COORDINATE EXACT MOUNTING LOCATION WITH ARCHITECT PRIOR TO INSTALLATION. PROVIDE ENOUGH CLEARANCE FOR THE NEW CORD REEL TO PREVENT CONFLICT WITH CEILING. EXTEND THE CORD REEL AND REINSTALL THE CORD STOP SO THAT THE END OF THE CORD AT 6'-0" AFF.
2. CONTRACTOR SHALL COREDRILL FLOOR AS REQUIRED TO INSTALL NEW POKE THRU FLOOR BOX. ALL POKE THRU FLOOR BOX WITH SUBSCIPT "PT3" SHALL INCLUDE TWO (2) DUPLEX RECEPTACLES AND ONE (1) DATA DROP AND ONE (1) HDMI INPUT. (POKE THRU FLOOR BOX SHALL BE LEGRAND MODEL AT6 OR APPROVED EQUAL. PROVIDE AND INSTALL ALL MOUNTING FRAMES AND COMPONENTS AS REQUIRED). CONTRACTOR SHALL PROVIDE AND INSTALL CAT 6 CABLES IN 3/4" E.C. TO ASSOCIATED ROOM ONT. PROVIDE AND INSTALL HDMI CABLE FROM THE FLOOR BOX TO THE ASSOCIATED ROOM'S BENQ. COORDINATE EXACT LOCATION WITH ARCHITECT PRIOR TO INSTALLATION.
3. CONTRACTOR SHALL COREDRILL FLOOR AS REQUIRED TO INSTALL NEW POKE THRU FLOOR BOX. ALL POKE THRU FLOOR BOX WITH SUSCTIPT "PT2" SHALL INCLUDE TWO (2) DUPLEX RECEPTACLES. (POKE THRU FLOOR BOX SHALL BE LEGRAND MODEL AT4 OR APPROVED EQUAL. PROVIDE AND INSTALL ALL MOUNTING FRAMES AND COMPONENTS AS REQUIRED).
4. DEDICATED RECEPTACLE FOR BENQ. CONTRACTOR SHALL MOUNT ALL RECEPTACLES WITH SUBSCRIPT "BQ" AT 3'-0" AFF. COORDINATE EXACT MOUNTING LOCATION AND HEIGHT WITH ARCHITECT PRIOR TO INSTALLATION.
5. CONTRACTOR SHALL MOUNT ALL RECEPTACLES WITH SUBSCRIPT "TV" AT 6'-0" AFF. COORDINATE EXACT MOUNTING LOCATION AND HEIGHT WITH ARCHITECT PRIOR TO INSTALLATION.
6. DEDICATED CIRCUIT FOR OPTICAL NETWORK TERMINAL (ONT). REFER TO ASSOCIATED LOW VOLTAGE PLAN APPROXIMATE LOCATION OF ONT AND FOR ADDITIONAL INFORMATION. CONTRACTOR SHALL NOTE PANELS "ITG" AND "IT1" ARE SERVED BY PANEL "EGP" (BACKED UP BY EMERGENCY GENERATOR). VERIFY EXACT MOUNTING LOCATION AND HEIGHT WITH SCHOOL DISTRICT PRIOR TO INSTALLATION.
7. CONTRACTOR SHALL PROVIDE AND INSTALL NEW VINYL LABEL ABOVE NEW RECEPTACLE STATING "DEDICATED RECEPTACLE FOR ONT, ONLY".
8. CONTRACTOR SHALL VERIFY EXACT MOUNTING LOCATION WITH ELEVATOR INSTALLER PRIOR TO INSTALLATION.

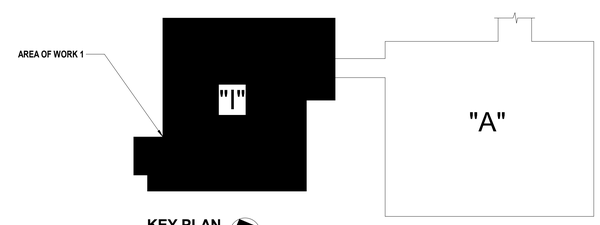

KEY PLAN
SCALE: NTS

H2M architects + engineers
538 Broad Hollow Road, 4th Floor East
Melville, NY 11747
631.756.8000 • www.h2m.com
Land Surveying Certificate of Authorization No.: 0018178
Engineering Certificate of Authorization No.: 0018438

CONSULTANTS:

MARK	DATE	DESCRIPTION

STATE OF NEW YORK · ANTHONY WOONGJIN KIM · 096392027 · LICENSED PROFESSIONAL ENGINEER

ANTHONY WOONGJIN KIM, P.E.
096392027 Exp. Date
IN PROFESSIONAL ENGINEER LIC. No. 096392
THIS TRACING IS NOT VALID UNLESS SIGNED BY A LICENSED PROFESSIONAL ENGINEER

DESIGNED BY:	DRAWN BY:	CHECKED BY:	REVIEWED BY:
LL	LL	LK	
PROJECT No: WPSD2203	DATE: FEBRUARY 2025	SCALE: AS SHOWN	

CLIENT
WHITE PLAINS CITY SCHOOL DISTRICT

HIGH SCHOOL ADDITION

White Plains Public Schools · REAL LIFE LEARNING

66-22-00-01-0-016-030

CONTRACT
CONTRACT E
ELECTRICAL CONSTRUCTION

STATUS
FINAL BID DOCUMENT

SHEET TITLE
ELECTRICAL FIRST FLOOR POWER PLAN

DRAWING No.
E 102.00

C:\Users\kmoldz\Documents\WPSD2203_Central21_M_mwdd25ZVF.rvt

3/21/2025 3:26:08 PM

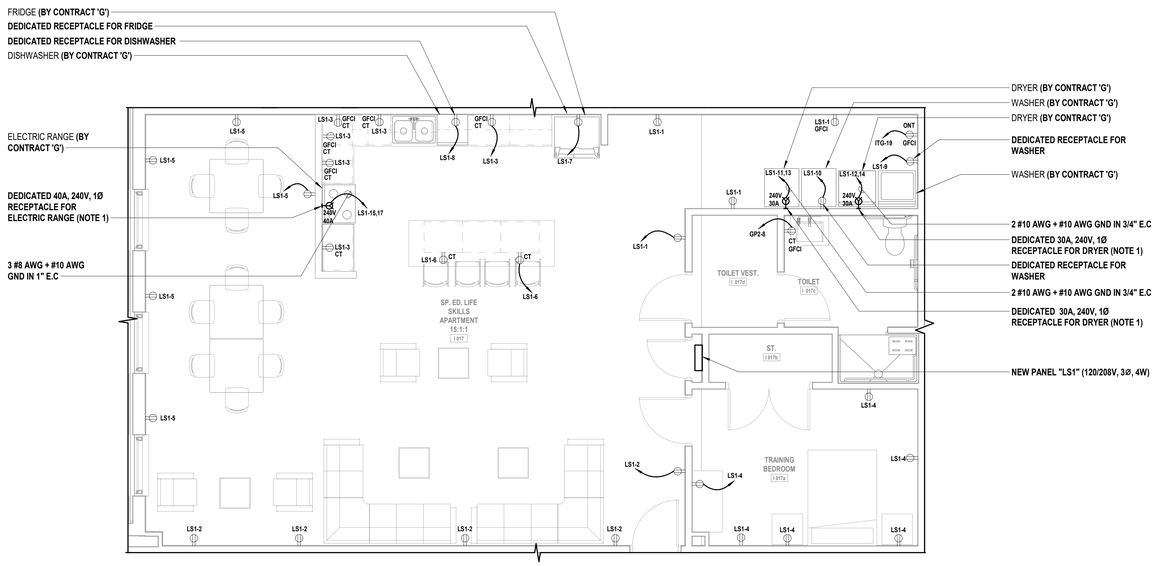

1 Electrical Partial Ground Floor Power Plan

SCALE: 1/4" = 1'-0"

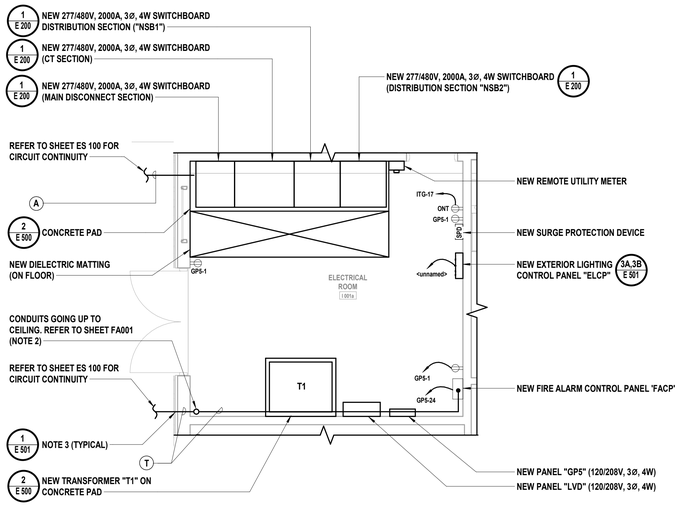

2 Electrical Partial Ground Floor Power Plan

SCALE: 1/4" = 1'-0"

ELECTRICAL GENERAL NOTES

G1. CONDUIT RUNS THAT ARE SHOWN ARE DIAGRAMMATICAL AND SHOW POTENTIAL ROUTING OF CONDUITS. IT IS THE RESPONSIBILITY OF THE CONTRACTOR TO COORDINATE RUNS WITH ALL TRADES AND DISTRICT.

G2. ALL WIRING AND CONDUIT SHALL BE RUN CONCEALED IN WALLS AND ABOVE HUNG CEILING UNLESS OTHERWISE NOTED.

G3. FOR ALL WIRE AND CONDUIT WITH (#) DESIGNATION, REFER TO SHEET E610 FOR FEEDER SCHEDULE FOR ALL WIRE AND CONDUIT SIZES AND QUANTITIES.

ELECTRICAL KEY NOTES:

1. CONTRACTOR SHALL PROVIDE AND INSTALL S.O. CORD AND PLUG RATED AT 240V TO MATCH RECEPTACLE AS REQUIRED. CONTRACTOR SHALL VERIFY EXACT PLUG TYPE PRIOR TO ORDERING.
2. CONDUIT RUNS AND PULL BOXES THAT ARE SHOWN ARE DIAGRAMMATICAL AND FOR REFERENCE ONLY. ELECTRONIC AS-BUILT DRAWINGS, SHOWN CONDUIT RUNS AND CIRCUITING MUST BE GIVEN TO THE ARCHITECT, ENGINEER AND DISTRICT AT THE COMPLETION OF THE JOB.
3. CONTRACTOR SHALL STUB ALL CONDUITS INTO NEW BUILDINGS BELOW GRADE. NO EXTERIOR CONDUITS PERMITTED TO RUN EXPOSED ON EXTERIOR WALLS. SEAL ALL CONDUIT PENTRATIONS WITH DUCT SEAL AND LINK SEAL. RESTORE ALL FLOOR FINISHES TO MATCH EXISTING.

KEY PLAN

SCALE: NTS

H2M architects + engineers
538 Broad Hollow Road, 4th Floor East
Melville, NY 11747
631.756.8000 • www.h2m.com
Land Surveying Certificate of Authorization No.: 0018178
Engineering Certificate of Authorization No.: 0018438

CONSULTANTS:

MARK	DATE	DESCRIPTION

STATE OF NEW YORK · ANTHONY WOONGJIN KIM · 096392027 · LICENSED PROFESSIONAL ENGINEER

ANTHONY WOONGJIN KIM, P.E.
096392027 Exp. Date
AI PROFESSIONAL ENGINEER Lic. No. 0(3392)
THE CREATION OF THIS DOCUMENT EXCEPT BY A LICENSED PROFESSIONAL IS ILLEGAL

DESIGNED BY:	DRAWN BY:	CHECKED BY:	REVIEWED BY:
LL	LL		
PROJECT No: WPSD2203	DATE: FEBRUARY 2025	SCALE: AS SHOWN	

CLIENT

WHITE PLAINS CITY SCHOOL DISTRICT

HIGH SCHOOL ADDITION

White Plains Public Schools · WP · REAL LIFE LEARNING

66-22-00-01-0-016-030

CONTRACT

CONTRACT E
ELECTRICAL CONSTRUCTION

STATUS

FINAL BID DOCUMENT

SHEET TITLE

ELECTRICAL PARTIAL GROUND FLOOR POWER PLAN

DRAWING No.

E 103.00

C:\Users\mwebb\Documents\WPSD2203_Central21_M_mwebb2SEXF.rvt
3/21/2025 3:26:09 PM

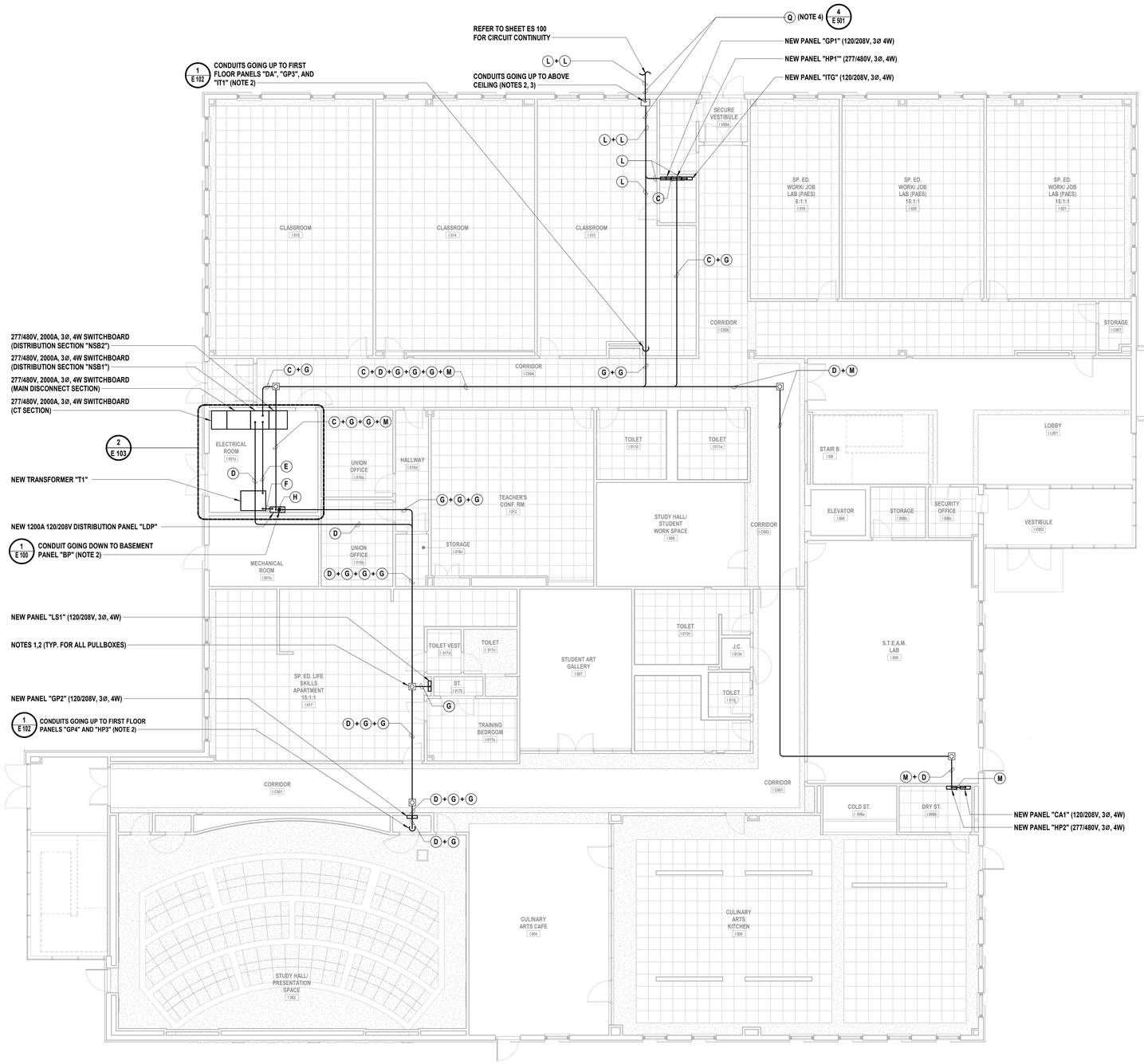

1 Electrical Ground Floor Conduit Routing Plan
SCALE: 1/8" = 1'-0"

ELECTRICAL GENERAL NOTES

G1. CONDUIT RUNS THAT ARE SHOWN ARE DIAGRAMMATICAL AND SHOW POTENTIAL ROUTING OF CONDUITS. IT IS THE RESPONSIBILITY OF THE CONTRACTOR TO COORDINATE RUNS WITH ALL TRADES AND DISTRICT.

G2. ALL WIRING AND CONDUIT SHALL BE RUN CONCEALED IN WALLS AND ABOVE HUNG CEILING UNLESS OTHERWISE NOTED.

G3. FOR ALL WIRE AND CONDUIT WITH (#) DESIGNATION, REFER TO SHEET E610 FOR FEEDER SCHEDULE FOR ALL WIRE AND CONDUIT SIZES AND QUANTITIES.

G4. CONTRACTOR SHALL ROUTE ALL WIRE AND CONDUIT FOR DISTRIBUTION PANELS BELOW NEW SLAB. COORDINATE WITH ALL TRADES PRIOR TO INSTALLATION. CONDUIT IN SLAB SHALL NOT BE PERMITTED.

ELECTRICAL KEY NOTES:

1. NEW PULL BOX. FLOOR PLAN SHOWS MINIMUM REQUIRED PULL BOXES. PROVIDE ADDITIONAL PULL BOXES AS REQUIRED BY NEC.
2. CONDUIT RUNS AND PULL BOXES THAT ARE SHOWN ARE DIAGRAMMATICAL AND FOR REFERENCE ONLY. ELECTRONIC AS-BUILT DRAWINGS, SHOWN CONDUIT RUNS AND CIRCUITING MUST BE GIVEN TO THE ARCHITECT, ENGINEER AND DISTRICT AT THE COMPLETION OF THE JOB.
3. CONTRACTOR SHALL STUB ALL CONDUITS INTO NEW BUILDINGS BELOW GRADE. NO EXTERIOR CONDUITS PERMITTED TO RUN EXPOSED ON EXTERIOR WALLS. SEAL ALL CONDUIT PENTRATIONS WITH DUCT SEAL FOR INTERIOR OF CONDUITS AND LINK SEAL ON EXTERIOR OF CONDUITS.
4. CONTRACTOR SHALL TERMINATE FIBER OPTIC CABLE TO NEAREST FIBER OPTIC CABLE SPLITTER. VERIFY EXACT LOCATION OF FIBER OPTIC CABLE SPLITTER WITH SCHOOL DISTRICT PRIOR TO INSTALLATION.

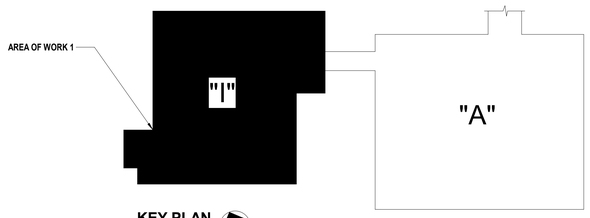

KEY PLAN
SCALE: NTS

H2M architects + engineers
538 Broad Hollow Road, 4th Floor East
Melville, NY 11747
631.756.8000 • www.h2m.com
Land Surveying Certificate of Authorization No.: 0018178
Engineering Certificate of Authorization No.: 0018438

CONSULTANTS:

MARK	DATE	DESCRIPTION

STATE OF NEW YORK · ANTHONY WOONGJIN KIM · 096392 · LICENSED PROFESSIONAL ENGINEER

06/30/2027
ANTHONY WOONGJIN KIM, P.E. Exp. Date
IN PROFESSIONAL ENGINEER LIC. No. 0(096392
"ALTERATION OF THIS DOCUMENT EXCEPT BY LICENSED PROFESSIONAL IS A VIOLATION"

DESIGNED BY:	DRAWN BY:	CHECKED BY:	REVIEWED BY:
LL	LL	AWK	-
PROJECT No: WPSD2203	DATE: FEBRUARY 2025	SCALE: AS SHOWN	

CLIENT
WHITE PLAINS CITY SCHOOL DISTRICT

HIGH SCHOOL ADDITION

White Plains Public Schools · REAL LIFE LEARNING

66-22-00-01-0-016-030

CONTRACT
CONTRACT E
ELECTRICAL CONSTRUCTION

STATUS
FINAL BID DOCUMENT

SHEET TITLE
ELECTRICAL GROUND FLOOR CONDUIT ROUTING PLAN

DRAWING No.
E 104.00

C:\Users\mvalle\Documents\WPSD2203_Central21_M_mvalle25ZKF.rvt

3/21/2025 3:26:10 PM

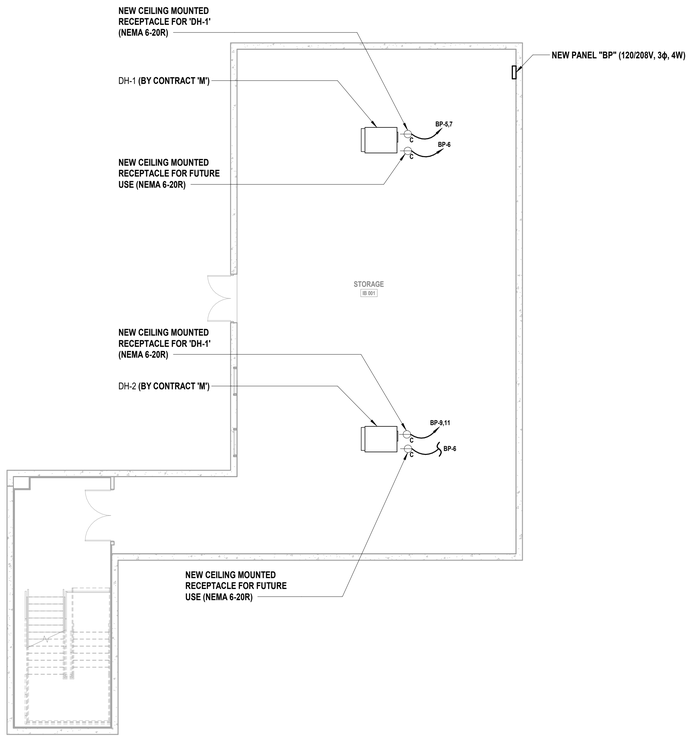

1 **Electrical Basement HVAC Power Plan**
SCALE: 1/8" = 1'-0"

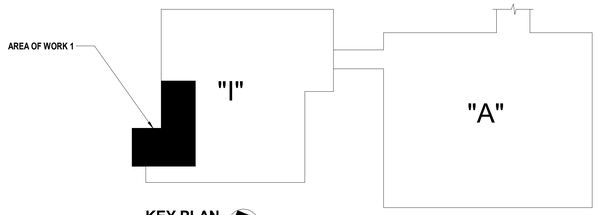

KEY PLAN
SCALE: NTS

H2M architects + engineers
538 Broad Hollow Road, 4th Floor East
Melville, NY 11747
631.756.8000 • www.h2m.com
Land Surveying Certificate of Authorization No.: 0018178
Engineering Certificate of Authorization No.: 0018438

CONSULTANTS:

MARK	DATE	DESCRIPTION

STATE OF NEW YORK
ANTHONY WOONGJIN KIM
LICENSED PROFESSIONAL ENGINEER
092583

06/30/2027
Exp. Date

ANTHONY WOONGJIN KIM, P.E.
NY PROFESSIONAL ENGINEER Lic. No. 092583
"AS TRACTION OF THIS DOCUMENT EXCEPT BY A LICENSED PROFESSIONAL IS A LICENSE"

DESIGNED BY:	DRAWN BY:	CHECKED BY:	REVIEWED BY:
LL	LL	LK	

PROJECT No:	DATE:	SCALE:
WPSD2203	FEBRUARY 2025	AS SHOWN

CLIENT
WHITE PLAINS CITY SCHOOL DISTRICT

HIGH SCHOOL ADDITION

White Plains Public Schools
WP
REAL LIFE LEARNING

66-22-00-01-0-016-030

CONTRACT
CONTRACT E
ELECTRICAL CONSTRUCTION

STATUS
FINAL BID DOCUMENT

SHEET TITLE
ELECTRICAL BASEMENT HVAC POWER PLAN

DRAWING No.
E 110.00

C:\Users\mvoltz\Documents\WPSD2203_Central21_M_mvoltz2SZVF.rvt
3/21/2025 3:26:11 PM

ELECTRICAL KEY NOTES:

1. REFER TO ASSOCIATED FIRE ALARM PLAN FOR ASSOCIATED CONTROL PANEL AND DUCT SMOKE DETECTOR AND FOR ADDITIONAL INFORMATION.

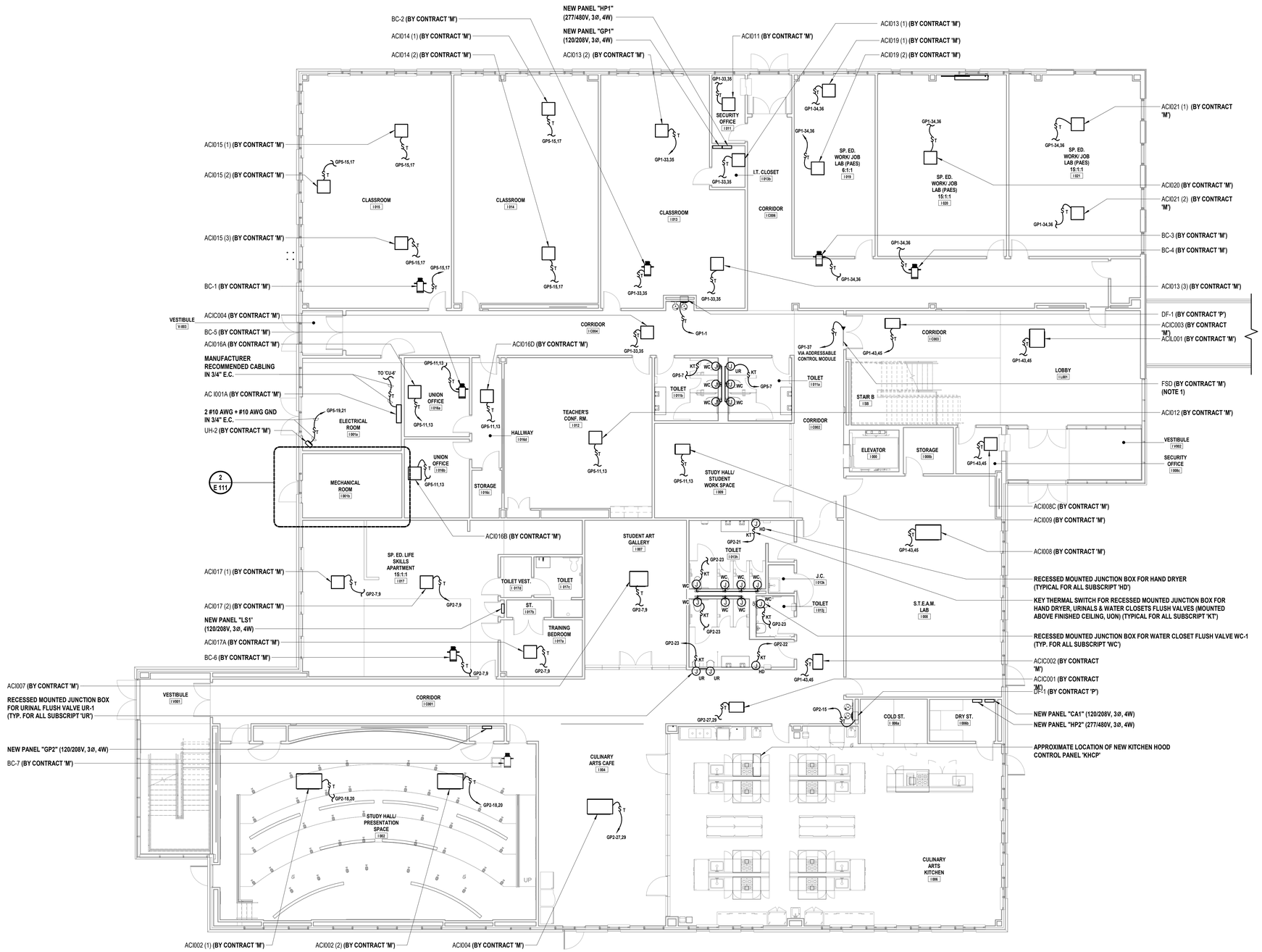

1 Electrical Ground Floor HVAC Power Plan

SCALE: 1/8" = 1'-0"

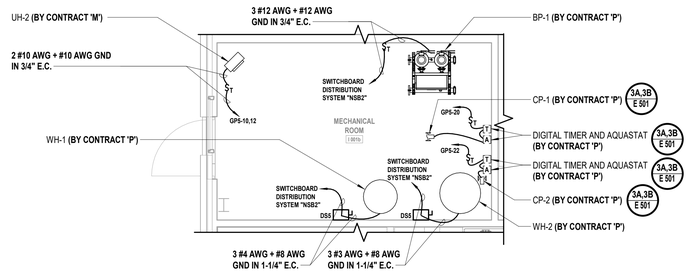

2 Electrical Enlarged Partial HVAC Power Plan

SCALE: 1/4" = 1'-0"

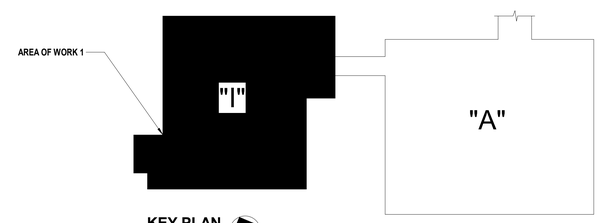

KEY PLAN

SCALE: NTS

H2M architects + engineers

538 Broad Hollow Road, 4th Floor East
Melville, NY 11747
631.756.8000 • www.h2m.com
Land Surveying Certificate of Authorization No.: 0018178
Engineering Certificate of Authorization No.: 0018438

CONSULTANTS:

MARK	DATE	DESCRIPTION

STATE OF NEW YORK · ANTHONY WOONGJIN KIM · 086392027 · LICENSED PROFESSIONAL ENGINEER

ANTHONY WOONGJIN KIM, P.E. — 06/30/2027 Exp. Date

AI PROFESSIONAL ENGINEER LIC. No. 086392

"ALTERATION OF THIS DOCUMENT EXCEPT BY A LICENSED PROFESSIONAL IS A VIOLATION OF STATE EDUCATION LAW ARTICLE 145"

DESIGNED BY:	DRAWN BY:	CHECKED BY:	REVIEWED BY:
LL	LL	LK	*

PROJECT No:	DATE:	SCALE:
WPSD2203	FEBRUARY 2025	AS SHOWN

CLIENT

WHITE PLAINS CITY SCHOOL DISTRICT

HIGH SCHOOL ADDITION

White Plains Public Schools · WPS · REAL LIFE LEARNING

66-22-00-01-0-016-030

CONTRACT

CONTRACT E
ELECTRICAL CONSTRUCTION

STATUS

FINAL BID DOCUMENT

SHEET TITLE

ELECTRICAL GROUND FLOOR HVAC POWER PLAN

DRAWING No.

E 111.00

C:\Users\mvidal\Documents\WPSD2203_Central\21_M_mvidal25ZVF.rvt

3/21/2025 1:26:14 PM

ELECTRICAL KEY NOTES:

1. REFER TO ASSOCIATED FIRE ALARM PLAN FOR ASSOCIATED CONTROL PANEL AND DUCT SMOKE DETECTOR AND FOR ADDITIONAL INFORMATION.

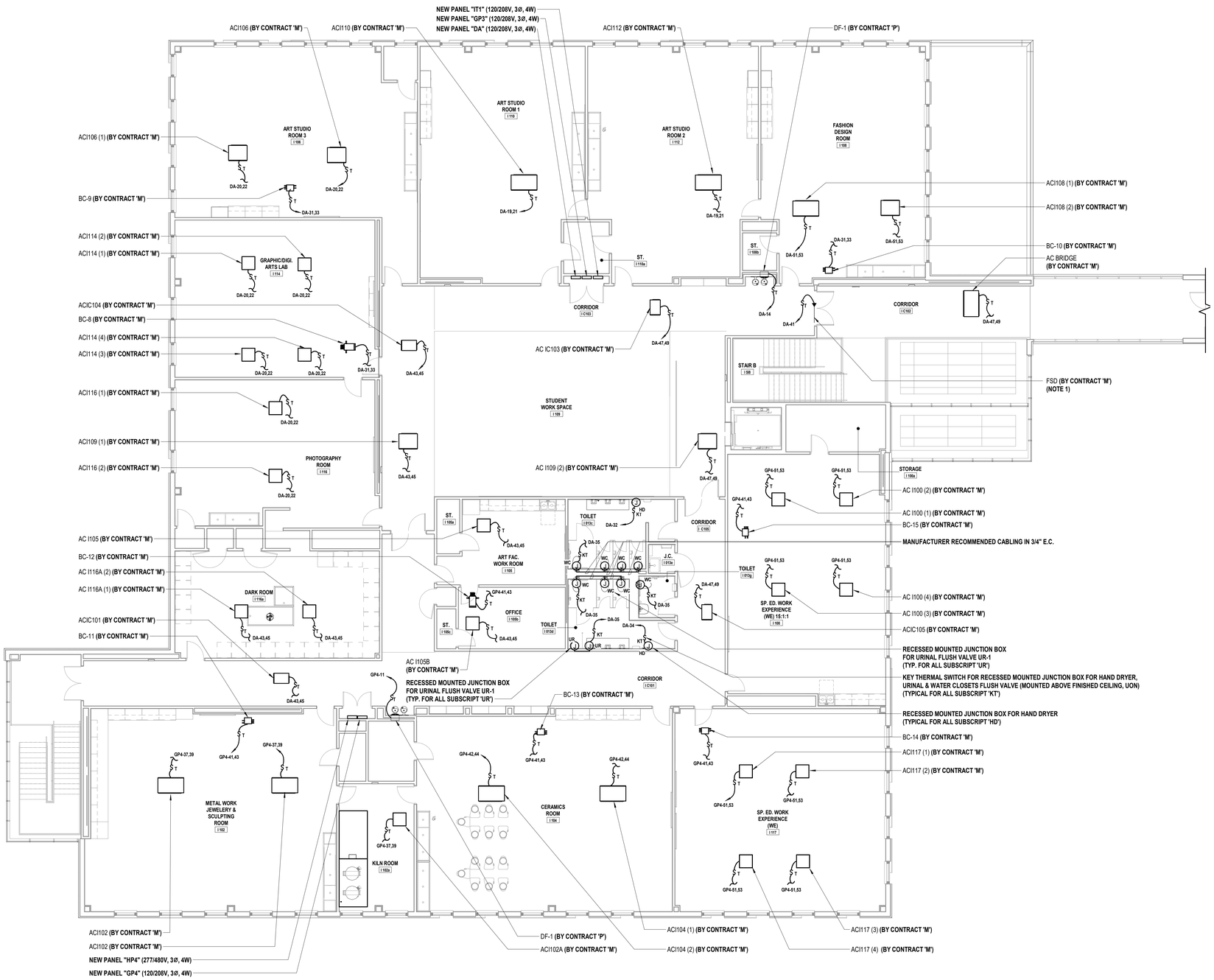

1 **First Floor HVAC Power Plan**
SCALE: 1/8" = 1'-0"

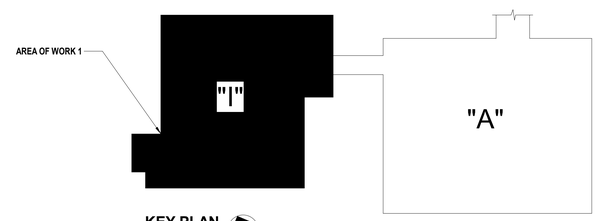

KEY PLAN
SCALE: NTS

H2M architects + engineers
538 Broad Hollow Road, 4th Floor East
Melville, NY 11747
631.756.8000 • www.h2m.com
Land Surveying Certificate of Authorization No.: 0018178
Engineering Certificate of Authorization No.: 0018438

CONSULTANTS:

MARK	DATE	DESCRIPTION

STATE OF NEW YORK · ANTHONY WOONGJIN KIM · 092037 · LICENSED PROFESSIONAL ENGINEER

ANTHONY WOONGJIN KIM, P.E. 06/30/2027 Exp. Date
NY PROFESSIONAL ENGINEER Lic. No. 092037
"ALTERATION OF THIS DOCUMENT VIOLATES NY LICENSED PROFESSIONAL ENGINEER LAW"

DESIGNED BY:	DRAWN BY:	CHECKED BY:	REVIEWED BY:
LL	LL	LK	-
PROJECT No: WPSD2203	DATE: FEBRUARY 2025	SCALE: AS SHOWN	

CLIENT
WHITE PLAINS CITY SCHOOL DISTRICT

HIGH SCHOOL ADDITION

White Plains Public Schools · WP · REAL LIFE LEARNING

66-22-00-01-0-016-030

CONTRACT
CONTRACT E
ELECTRICAL CONSTRUCTION

STATUS
FINAL BID DOCUMENT

SHEET TITLE
ELECTRICAL FIRST FLOOR HVAC POWER PLAN

DRAWING No.
E 112.00

C:\Users\mvidal2\Documents\WPSD2203_Central21_M_mvidal2SZ0VF.rvt

3/21/2025 3:26:18 PM

ELECTRICAL GENERAL NOTE:

1. REFER TO DRAWING E 111 FOR LOCATION OF KITCHEN HOOD CONTROL PANEL 'KHCP'

ELECTRICAL KEY NOTES:

1. MECHANICAL EQUIPMENT IS PROVIDED WITH DISCONNECT SWTICH.
2. CONTRACTOR SHALL PROVIDE AND INSTALL A CHANNEL SUPPORT SYSTEM AS REQUIRED TO MOUNT DISCONNECT SWITCH AND/OR RECEPTACLE FROM THE ROOF CURBS SUPPORTING THE HVAC UNIT SUCH THAT THE UNIT'S MANUFACTURER'S WARRANTY IS NOT VOIDED. PROVIDE AND INSTALL ALL MOUNTING HARDWARE AND ACCESSORIES AS REQUIRED TO MAINTAIN WORKING CLEARANCE AS PER NEC 110.26. MAINTAIN ALL CLEARANCES FROM THE HVAC UNIT AS REQUIRED BY THE IMC.
3. REFER TO DRAWING E112 FOR LOCATION OF ASSOCIATED TIMECLOCK.

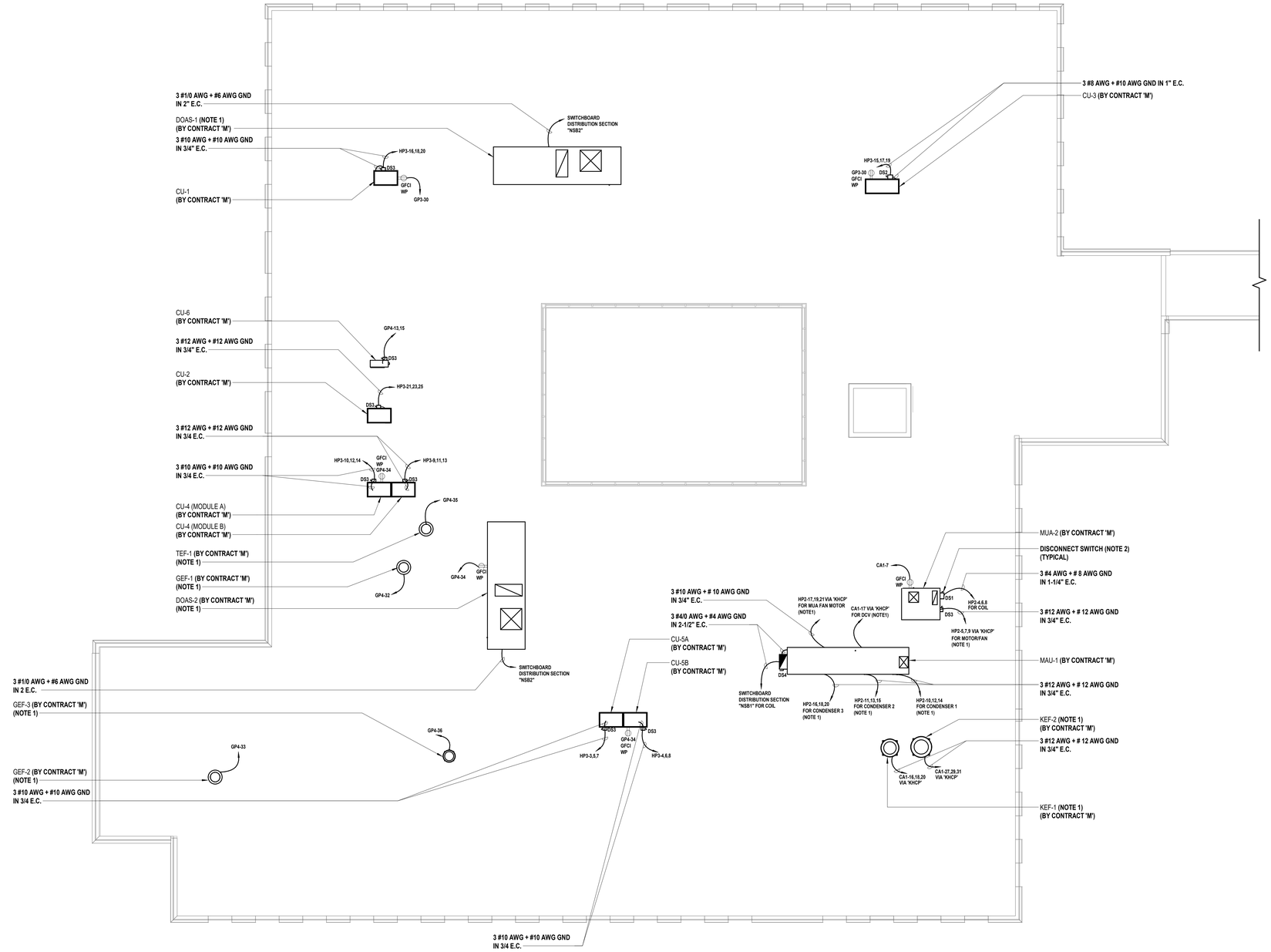

1 **Electrical Roof HVAC Power Plan**
SCALE: 1/8" = 1'-0"

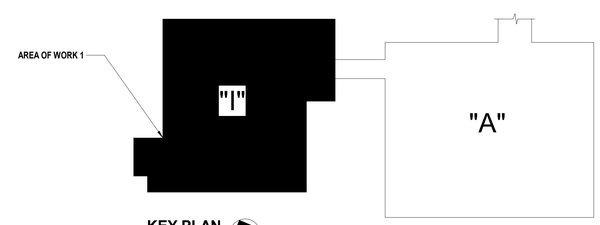

KEY PLAN
SCALE: NTS

H2M architects + engineers
538 Broad Hollow Road, 4th Floor East
Melville, NY 11747
631.756.8000 • www.h2m.com
Land Surveying Certificate of Authorization No.: 0018178
Engineering Certificate of Authorization No.: 0018438

CONSULTANTS:

MARK	DATE	DESCRIPTION

STATE OF NEW YORK · ANTHONY WOONGJIN KIM · 096390207 · LICENSED PROFESSIONAL ENGINEER

ANTHONY WOONGJIN KIM, P.E.
096390207
Exp. Date
IN PROFESSIONAL ENGINEER LIC. No. 0(096)
THE TRANSFER OF THIS DOCUMENT EXCEPT BY A LICENSED PROFESSIONAL IS ILLEGAL

DESIGNED BY:	DRAWN BY:	CHECKED BY:	REVIEWED BY:
LL	LL		
PROJECT No: WPSD2203	DATE: FEBRUARY 2025	SCALE: AS SHOWN	

CLIENT
WHITE PLAINS CITY SCHOOL DISTRICT

HIGH SCHOOL ADDITION

White Plains Public Schools · REAL LIFE LEARNING

66-22-00-01-0-016-030

CONTRACT
CONTRACT E ELECTRICAL CONSTRUCTION

STATUS
FINAL BID DOCUMENT

SHEET TITLE
ELECTRICAL ROOF HVAC POWER PLAN

DRAWING No.
E 113.00

C:\Users\mcahr\Documents\WPSD2203_Central21_M_model25ZUF.rvt
3/21/2025 3:26:16 PM

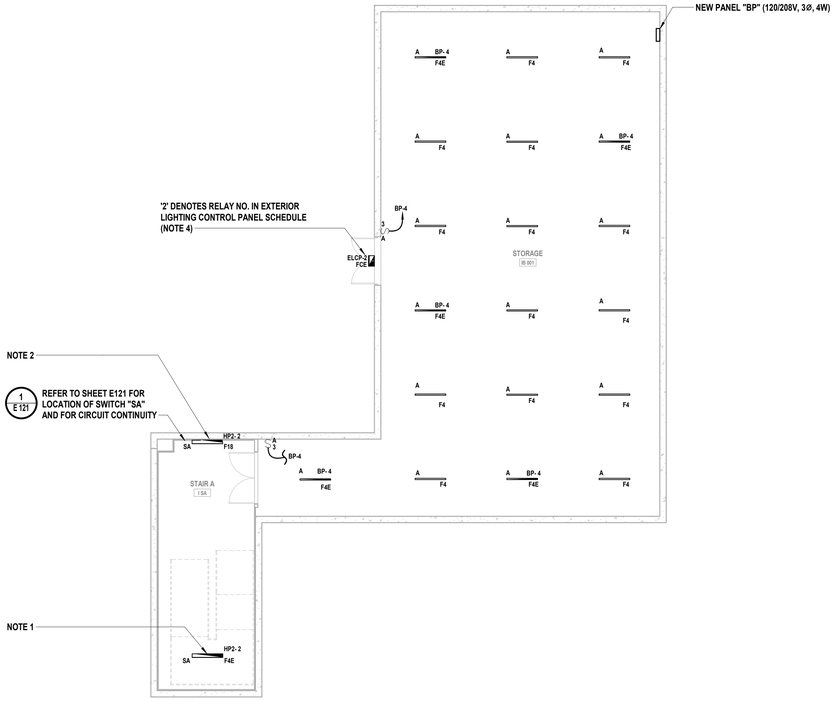

1 **Electrical Basement Lighting Plan**
SCALE: 1/8" = 1'-0"

ELECTRICAL LIGHTING GENERAL NOTES:

GL1. PROVIDE ALL REQUIRED WIRING BETWEEN SWITCHES, ROOM CONTROLLERS, AND/OR OCCUPANCY/VACANCY SENSORS FOR COMPLETE LIGHTING CONTROL. WHERE 3 OR 4 WAY SWITCHES ARE USED, PROVIDE ALL REQUIRED WIRING BETWEEN SWITCHES. WIRE SIZE SHALL EQUAL POWER FEED SIZE.

GL2. FIXTURES INDICATED WITH CIRCUIT DESIGNATIONS SHALL BE CONNECTED TO LINE SIDE OF THE CIRCUIT.

GL3. FIXTURES INDICATED WITH LETTER DESIGNATIONS SHALL BE CONNECTED TO THE SWITCH, VACANCY/OCCUPANCY SENSOR AND/OR ROOM CONTROLLER WITH CORRESPONDING LETTER DESIGNATION.

GL4. PROVIDE AND INSTALL A DEDICATED NEUTRAL FOR EACH CIRCUIT. CONTRACTOR IS NOT PERMITTED TO USE COMMON NEUTRALS.

GL5. PROVIDE BOX AND ACCESSORIES AS PER MANUFACTURER'S RECOMMENDATION FOR ALL SWITCHES, VACANCY/OCCUPANCY SENSORS, AND/OR ROOM CONTROLLERS.

GL6. VERIFY EXACT LOCATIONS AND MOUNTING HEIGHTS WITH ARCHITECT/ENGINEER IN FIELD.

GL7. ALL CEILING MOUNTED FIXTURES WITH EMERGENCY DRIVER AND ALL FIXTURES THAT ARE PART OF AN EMERGENCY LIGHTING SYSTEM, FED FROM A BATTERY SYSTEM SHALL BE LABELED. THESE LABELS SHALL BE EASILY READ FROM THE FLOOR LEVEL AND STATE THAT THE FIXTURE IS AN EMERGENCY FIXTURE AND CONTAIN PANEL NAME AND CITCUIT NUMBER THAT IT IS FED FROM.

GL8. WIRING FOR EMERGENCY DRIVER IS NOT SHOWN ON PLANS. FIXTURES WITH EMERGENCY DRIVERS SHALL BE PROVIDED WITH AN UNSWITCHED POWER FEED FROM CIRCUIT FEEDING LIGHT FIXTURE.

GL9. CONTRACTOR SHALL USE SILICONE WATER PROOF SEALANT TO SEAL TOP, LEFT, AND RIGHT EDGES OF LIGHT FIXTURES TO WALL TO PREVENT MOISTURE FROM ACCUMULATING BEHIND FIXTURE. BOTTOM EDGE SHALL BE LEFT UNSEALED FOR DRAINAGE. COLOR OF SILICONE SHALL MATCH EITHER WALL COLOR OR FIXTURE COLOR. (TYPICAL OF ALL EXTERIOR WALL MOUNTED FIXTURES.)

ELECTRICAL LIGHTING KEY NOTES:

1. CONTRACTOR SHALL NOTE LIGHT FIXTURE SHALL BE INSTALLED UNDER THE STAIRCASE LANDING.
2. CONTRACTOR SHALL MOUNT WALL MOUNT LIGHT FIXTURE 7'-6" AFF.
3. REFER TO EXTERIOR LIGHTING CONTROL PANEL RELAY SCHEDULE ON SHEET E600.

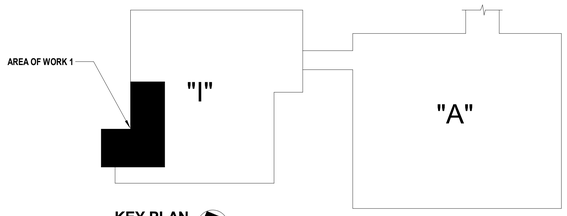

KEY PLAN
SCALE: NTS

H2M architects + engineers
538 Broad Hollow Road, 4th Floor East
Melville, NY 11747
631.756.8000 • www.h2m.com
Land Surveying Certificate of Authorization No.: 0018178
Engineering Certificate of Authorization No.: 0018438

CONSULTANTS:

MARK	DATE	DESCRIPTION

STATE OF NEW YORK · ANTHONY WOONGJIN KIM · 090392 · LICENSED PROFESSIONAL ENGINEER

ANTHONY WOONGJIN KIM, P.E.
Exp. Date 06/30/2027
AI PROFESSIONAL ENGINEER Lic. No. 092392
"ALTERATION OR COMPLICATION EXCEPT BY LICENSED PROFESSIONAL IS A CRIME."

DESIGNED BY:	DRAWN BY:	CHECKED BY:	REVIEWED BY:
LL	LL		
PROJECT No: WPSD2203	DATE: FEBRUARY 2025	SCALE: AS SHOWN	

CLIENT
WHITE PLAINS CITY SCHOOL DISTRICT

HIGH SCHOOL ADDITION

White Plains Public Schools · WP · REAL LIFE LEARNING

66-22-00-01-0-016-030

CONTRACT
CONTRACT E
ELECTRICAL CONSTRUCTION

STATUS
FINAL BID DOCUMENT

SHEET TITLE
ELECTRICAL BASEMENT LIGHTING PLAN

DRAWING No.
E 120.00

C:\Users\mwitz\Documents\WPSD2203_Central21_M_mwitz2SEXVF.rvt
3/21/2025 3:26:17 PM

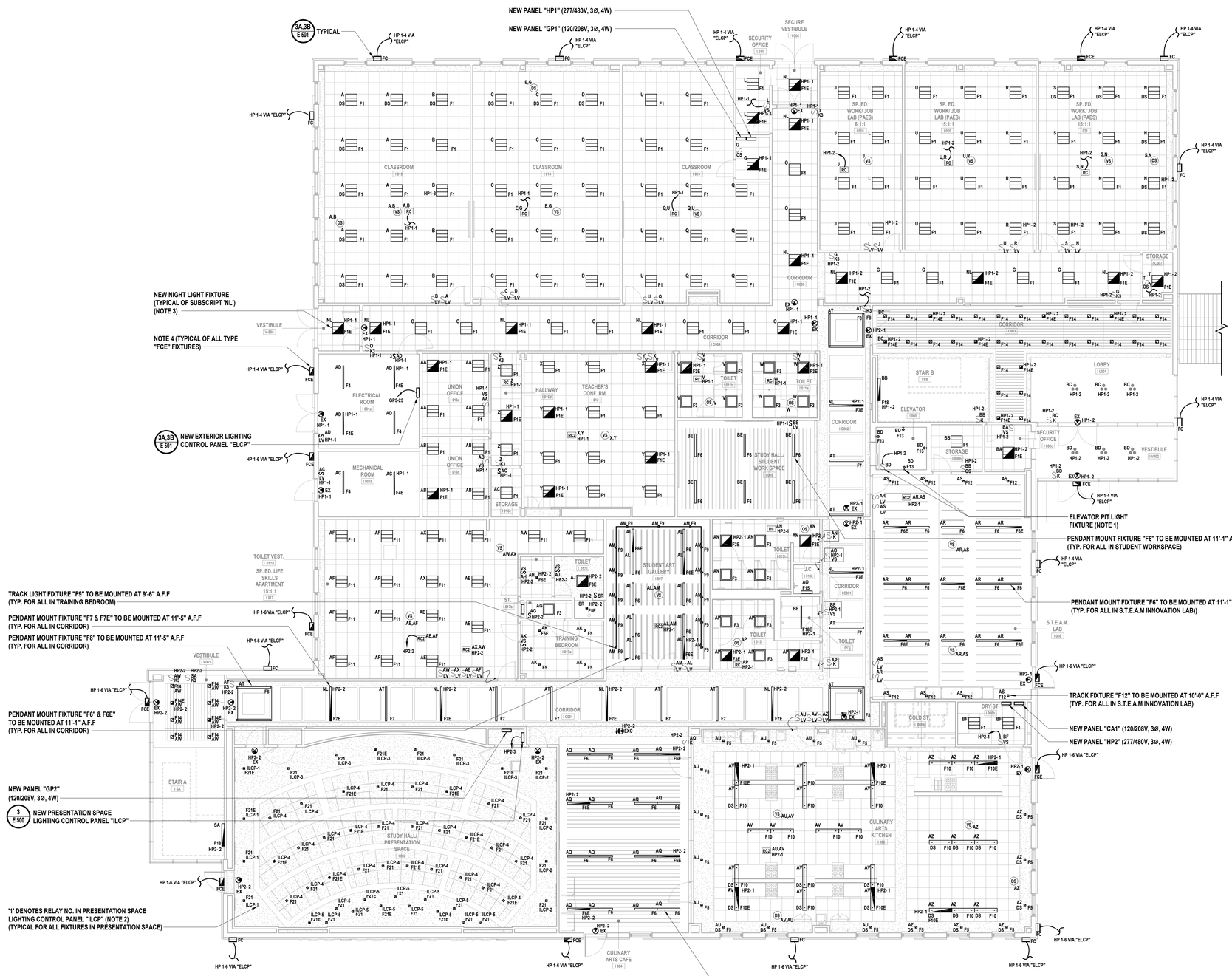

1 Electrical Ground Floor Lighting Plan

SCALE: 1/8" = 1'-0"

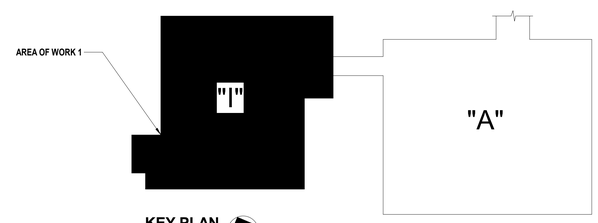

KEY PLAN

SCALE: NTS

ELECTRICAL LIGHTING GENERAL NOTES:

GL1. PROVIDE ALL REQUIRED WIRING BETWEEN SWITCHES, CONTROLLERS, AND/OR OCCUPANCY/VACANCY SENSORS FOR COMPLETE LIGHTING CONTROL. WHERE 3 OR 4 WAY SWITCHES ARE USED, PROVIDE ALL REQUIRED WIRING BETWEEN SWITCHES. WIRE SIZE SHALL EQUAL POWER FEED SIZE.

GL2. CONTRACTOR SHALL LOCATE AND INSTALL ALL LIGHT FIXTURES IN MECHANICAL ROOMS TO PROVIDE CLEARANCE FROM ALL MECHANICAL EQUIPMENT. COORDINATE WITH MECHANICAL CONTRACTOR PRIOR TO INSTALLING FIXTURES, SWITCHES, CONDUIT, AND WIRING.

GL3. FIXTURES INDICATED WITH CIRCUIT DESIGNATIONS SHALL BE CONNECTED TO LINE SIDE OF THE CIRCUIT.

GL4. FIXTURES INDICATED WITH LETTER DESIGNATIONS SHALL BE CONNECTED TO THE SWITCH, VACANCY/OCCUPANCY SENSOR AND/OR ROOM CONTROLLER WITH CORRESPONDING LETTER DESIGNATION.

GL5. PROVIDE AND INSTALL A DEDICATED NEUTRAL FOR EACH CIRCUIT. CONTRACTOR IS NOT PERMITTED TO USE COMMON NEUTRALS.

GL6. PROVIDE BOX AND ACCESSORIES AS PER MANUFACTURER'S RECOMMENDATION FOR ALL SWITCHES, VACANCY/OCCUPANCY SENSORS, AND/OR ROOM CONTROLLERS.

GL7. VERIFY EXACT LOCATIONS AND MOUNTING HEIGHTS WITH ARCHITECT/ENGINEER IN FIELD.

GL8. ALL CEILING MOUNTED FIXTURES WITH EMERGENCY DRIVER AND ALL FIXTURES THAT ARE PART OF AN EMERGENCY LIGHTING SYSTEM, FED FROM A BATTERY SYSTEM SHALL BE LABELED. THESE LABELS SHALL BE EASILY READ FROM THE FLOOR LEVEL AND STATE THAT THE FIXTURE IS AN EMERGENCY FIXTURE AND CONTAIN PANEL NAME AND CITCUIT NUMBER THAT IT IS FED FROM.

GL9. WIRING FOR EMERGENCY DRIVER IS NOT SHOWN ON PLANS. FIXTURES WITH EMERGENCY DRIVERS SHALL BE PROVIDED WITH AN UNSWITCHED POWER FEED FROM CIRCUIT FEEDING LIGHT FIXTURE.

GL10. CONTRACTOR SHALL USE SILICONE WATER PROOF SEALANT TO SEAL TOP, LEFT, AND RIGHT EDGES OF LIGHT FIXTURES TO WALL TO PREVENT MOISTURE FROM ACCUMULATING BEHIND FIXTURE. BOTTOM EDGE SHALL BE LEFT UNSEALED FOR DRAINAGE. COLOR OF SILICONE SHALL MATCH EITHER WALL COLOR OR FIXTURE COLOR. (TYPICAL OF ALL EXTERIOR WALL MOUNTED FIXTURES.)

ELECTRICAL KEY NOTES:

1. CONTRACTOR SHALL COORDINATE EXACT MOUNTING HEIGHT WITH ELEVATOR INSTALLER PRIOR TO INSTALLATION.
2. REFER TO ILCP LIGHTING CONTROL PANEL RELAY SCHEDULE ON SHEET E600.
3. LIGHT FIXTURE SHALL BE ON 24 HOURS WITH EMERGENCY BACKUP. FIXTURE SHALL NOT BE CONTROLLED BY KEYED SWITCH. PROVIDE AN UNSWITCHED POWER FEED FROM THE CIRCUIT SERVING LIGHTING. TERMINATE UNSWITCHED POWER FEED TO EMERGENCY DRIVER AND NORMAL UTILITY DRIVER.
4. CONTRACTOR SHALL PROVIDE AN UNSWITHED CIRCUIT FROM THE CIRCUIT SERVING THE LIGHTING FOR EMERGENCY BATTERY BACKUP.

H2M architects + engineers
538 Broad Hollow Road, 4th Floor East
Melville, NY 11747
631.756.8000 • www.h2m.com
Land Surveying Certificate of Authorization No.: 0018178
Engineering Certificate of Authorization No.: 0018438

CONSULTANTS:

MARK	DATE	DESCRIPTION

STATE OF NEW YORK · ANTHONY WOONGJIN KIM · 096392027 · LICENSED PROFESSIONAL ENGINEER

ANTHONY WOONGJIN KIM, P.E.
096392027 Exp. Date
BY PROFESSIONAL ENGINEER LIC. No. 092392
THE CREATION OF THIS DOCUMENT WAS BY AN LICENSED PROFESSIONAL IN A FIRM.

DESIGNED BY:	DRAWN BY:	CHECKED BY:	REVIEWED BY:
LL	LL	LK	*

PROJECT No:	DATE:	SCALE:
WPSD2203	FEBRUARY 2025	AS SHOWN

CLIENT

WHITE PLAINS CITY SCHOOL DISTRICT

HIGH SCHOOL ADDITION

White Plains Public Schools · WP · REAL LIFE LEARNING

66-22-00-01-0-016-030

CONTRACT

CONTRACT E
ELECTRICAL CONSTRUCTION

STATUS

FINAL BID DOCUMENT

SHEET TITLE

ELECTRICAL GROUND FLOOR LIGHTING PLAN

DRAWING No.

E 121.00

C:\Users\mwatts\Documents\WPSD2203_Central21_M_model25DVF.rvt
3/21/2025 3:28:22 PM

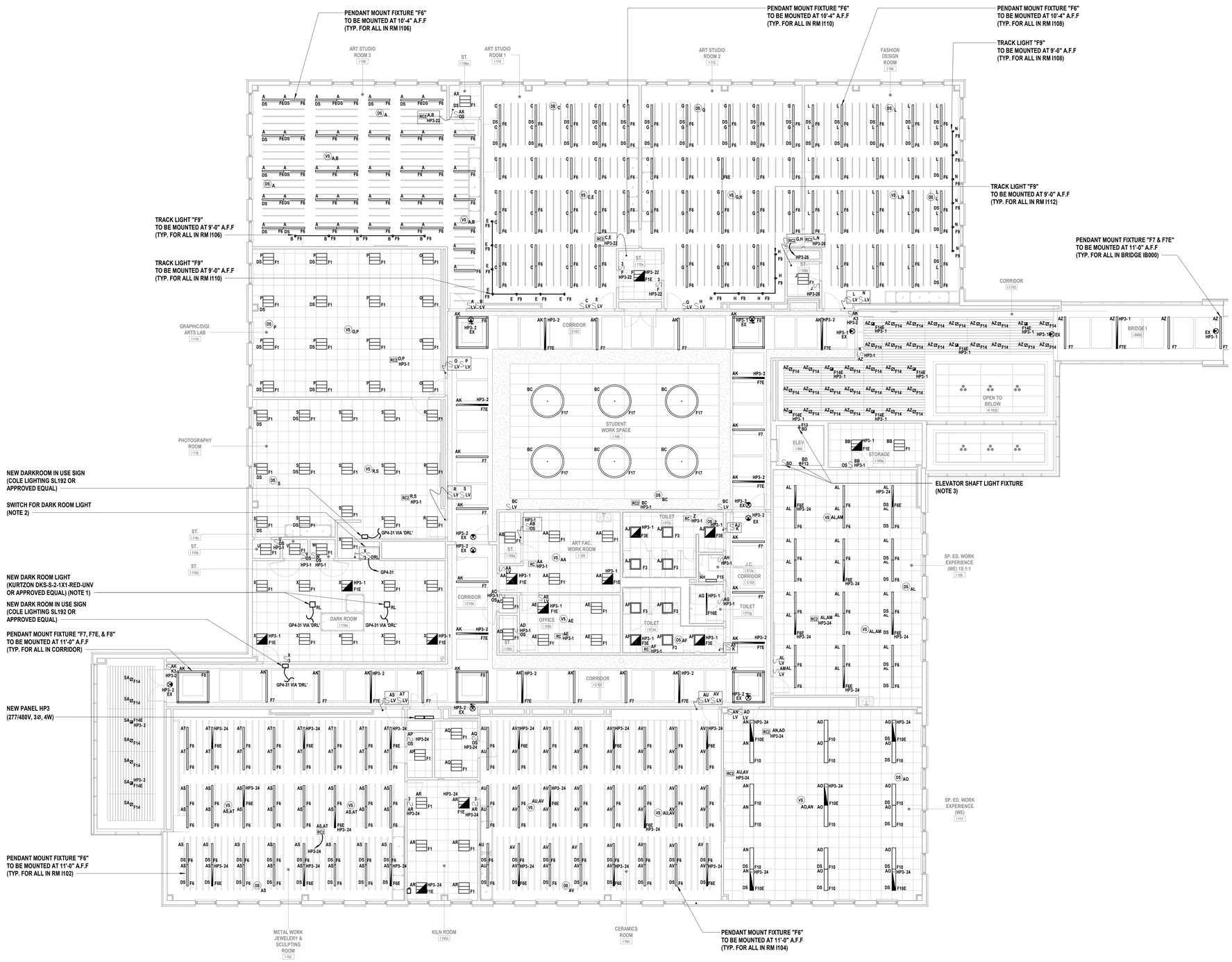

1 Electrical First Floor Lighting Plan

SCALE: 1/8" = 1'-0"

ELECTRICAL LIGHTING GENERAL NOTES:

GL1. PROVIDE ALL REQUIRED WIRING BETWEEN SWITCHES, CONTROLLERS, AND/OR OCCUPANCY/VACANCY SENSORS FOR COMPLETE LIGHTING CONTROL. WHERE 3 OR 4 WAY SWITCHES ARE USED, PROVIDE ALL REQUIRED WIRING BETWEEN SWITCHES. WIRE SIZE SHALL EQUAL POWER FEED SIZE.

GL2. CONTRACTOR SHALL LOCATE AND INSTALL ALL LIGHT FIXTURES IN MECHANICAL ROOMS TO PROVIDE CLEARANCE FROM ALL MECHANICAL EQUIPMENT. COORDINATE WITH MECHANICAL CONTRACTOR PRIOR TO INSTALLING FIXTURES, SWITCHES, CONDUIT, AND WIRING.

GL3. FIXTURES INDICATED WITH CIRCUIT DESIGNATIONS SHALL BE CONNECTED TO LINE SIDE OF THE CIRCUIT.

GL4. FIXTURES INDICATED WITH LETTER DESIGNATIONS SHALL BE CONNECTED TO THE SWITCH, VACANCY/OCCUPANCY SENSOR AND/OR ROOM CONTROLLER WITH CORRESPONDING LETTER DESIGNATION.

GL5. PROVIDE AND INSTALL A DEDICATED NEUTRAL FOR EACH CIRCUIT. CONTRACTOR IS NOT PERMITTED TO USE COMMON NEUTRALS.

GL6. PROVIDE BOX AND ACCESSORIES AS PER MANUFACTURER'S RECOMMENDATION FOR ALL SWITCHES, VACANCY/OCCUPANCY SENSORS, AND/OR ROOM CONTROLLERS.

GL7. VERIFY EXACT LOCATIONS AND MOUNTING HEIGHTS WITH ARCHITECT/ENGINEER IN FIELD.

GL8. ALL CEILING MOUNTED FIXTURES WITH EMERGENCY DRIVER AND ALL FIXTURES THAT ARE PART OF AN EMERGENCY LIGHTING SYSTEM, FED FROM A BATTERY SYSTEM SHALL BE LABELED. THESE LABELS SHALL BE EASILY READ FROM THE FLOOR LEVEL AND STATE THAT THE FIXTURE IS AN EMERGENCY FIXTURE AND CONTAIN PANEL NAME AND CITCUIT NUMBER THAT IT IS FED FROM.

GL9. WIRING FOR EMERGENCY DRIVER IS NOT SHOWN ON PLANS. FIXTURES WITH EMERGENCY DRIVERS SHALL BE PROVIDED WITH AN UNSWITCHED POWER FEED FROM CIRCUIT FEEDING LIGHT FIXTURE.

GL10. CONTRACTOR SHALL USE SILICONE WATER PROOF SEALANT TO SEAL TOP, LEFT, AND RIGHT EDGES OF LIGHT FIXTURES TO WALL TO PREVENT MOISTURE FROM ACCUMULATING BEHIND FIXTURE. BOTTOM EDGE SHALL BE LEFT UNSEALED FOR DRAINAGE. COLOR OF SILICONE SHALL MATCH EITHER WALL COLOR OR FIXTURE COLOR. (TYPICAL OF ALL EXTERIOR WALL MOUNTED FIXTURES.)

ELECTRICAL KEY NOTES:

1. CONTRACTOR SHALL PROVIDE AND INSTALL ALL MOUNTING HARDWARE AS REQUIRED FOR A SECURE INSTALLATION TO THE CEILING ABOVE. COORDINATE EXACT LOCATION OF DARK ROOM LIGHTS WITH SCHOOL DISTRICT PRIOR TO INSTALLATION.
2. CONTRACTOR SHALL PROVIDE AND INSTALL NEW PHENOLIC NAMEPLATE FOR DARK ROOM LIGHT SWITCHES. ABOVE GENERAL LIGHTING SWITCH PROVIDE LABEL STATING "GENERAL LIGHTING". ABOVE DARK ROOM LIGHT SWITCH PROVIDE LABEL STATING "DARK ROOM LIGHT".
3. CONTRACTOR SHALL COORDINATE EXACT MOUNTING HEIGHT WITH ELEVATOR INSTALLER PRIOR TO INSTALLATION.

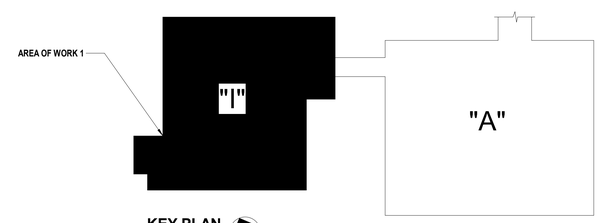

KEY PLAN

SCALE: NTS

H2M architects + engineers

538 Broad Hollow Road, 4th Floor East
Melville, NY 11747
631.756.8000 • www.h2m.com
Land Surveying Certificate of Authorization No.: 0018178
Engineering Certificate of Authorization No.: 0018438

CONSULTANTS:

MARK	DATE	DESCRIPTION

ANTHONY WOONGJIN KIM, P.E.
06/30/2027 Exp. Date
BY PROFESSIONAL ENGINEER LIC. No. 082883
THE CREATION OF THIS DOCUMENT EXCEPT BY A LICENSED PROFESSIONAL IS ILLEGAL

DESIGNED BY:	DRAWN BY:	CHECKED BY:	REVIEWED BY:
LL	LL	LK	*
PROJECT No: WPSD2203	DATE: FEBRUARY 2025	SCALE: AS SHOWN	

CLIENT

WHITE PLAINS CITY SCHOOL DISTRICT

HIGH SCHOOL ADDITION

66-22-00-01-0-016-030

CONTRACT

CONTRACT E
ELECTRICAL CONSTRUCTION

STATUS

FINAL BID DOCUMENT

SHEET TITLE

ELECTRICAL FIRST FLOOR LIGHTING PLAN

DRAWING No.

E 122.00

C:\Users\mvdz\Documents\WPSD2203_Central21_M_mvdzSZCVF.rvt

3/21/2025 3:26:52 PM

ELECTRICAL GENERAL NOTES:

G1. REFER TO DRAWING E 131 FOR LOCATION OF ONT.

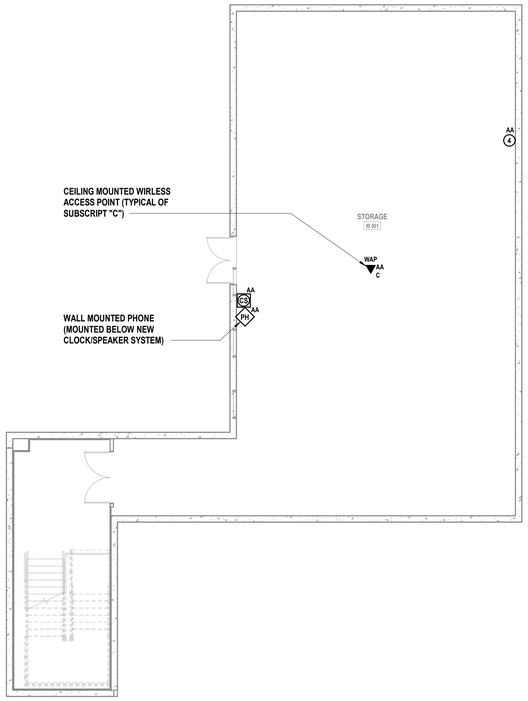

1 **Electrical Basement Low Voltage Plan**
SCALE: 1/8" = 1'-0"

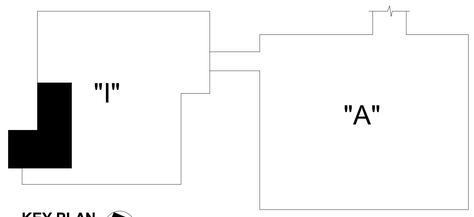

KEY PLAN
SCALE: NTS

H2M architects + engineers

538 Broad Hollow Road, 4th Floor East
Melville, NY 11747
631.756.8000 • www.h2m.com
Land Surveying Certificate of Authorization No.: 0018178
Engineering Certificate of Authorization No.: 0018438

CONSULTANTS:

MARK	DATE	DESCRIPTION

06/30/2027
Exp. Date

ANTHONY WOONGJIN KIM, P.E.
NY PROFESSIONAL ENGINEER Lic. No. 092583
"AN INDICATION OF THIS DOCUMENT EXCEPT BY A LICENSED PROFESSIONAL IS A LICENSE"

DESIGNED BY:	DRAWN BY:	CHECKED BY:	REVIEWED BY:
LL	LL	LK	

PROJECT No:	DATE:	SCALE:
WPSD2203	FEBRUARY 2025	AS SHOWN

CLIENT

WHITE PLAINS CITY SCHOOL DISTRICT

HIGH SCHOOL ADDITION

66-22-00-01-0-016-030

CONTRACT

CONTRACT E
ELECTRICAL CONSTRUCTION

STATUS

FINAL BID DOCUMENT

SHEET TITLE

ELECTRICAL
ELECTRICAL BASEMENT LOW VOLTAGE PLAN

DRAWING No.

E 130.00

C:\Users\mvoltz\Documents\WPSD2203_Central21_M_mvoltz2SZVF.rvt

3/21/2025 3:26:59 PM

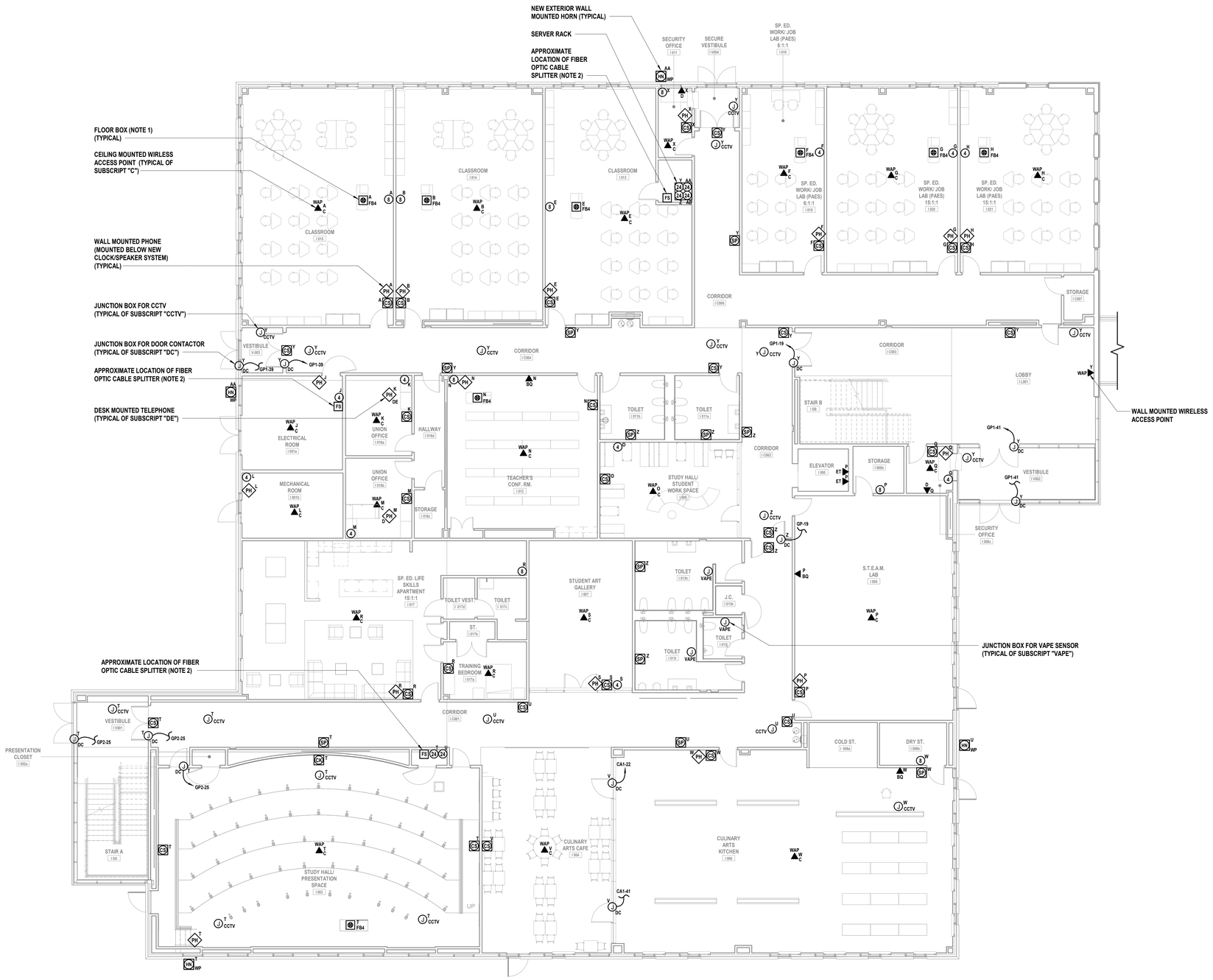

1 **Electrical Ground Floor Low Voltage Plan**
SCALE: 1/8" = 1'-0"

ELECTRICAL GENERAL NOTES:

G1. REFER TO ASSOCIATED POWER PLAN FOR ONT POWER.

ELECTRICAL KEY NOTES:

1. REFER TO ASSOCIATED POWER PLAN FOR ADDITIONAL INFORMATION
2. CONTRACTOR SHALL WALL MOUNT FIBER OPTICAL SPLITTER AT 7'-0" AFF. PROVIDE ALL MOUNTING HARDWARE AS REQUIRED. VERIFY EXACT LOCATION WITH SCHOOL DISTRICT PRIOR TO INSTALLATION.

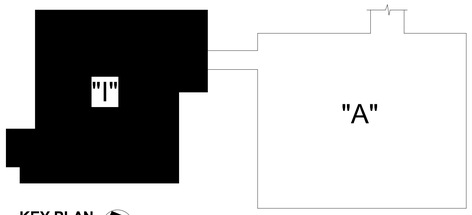

KEY PLAN
SCALE: NTS

H2M architects + engineers
538 Broad Hollow Road, 4th Floor East
Melville, NY 11747
631.756.8000 • www.h2m.com
Land Surveying Certificate of Authorization No.: 0018178
Engineering Certificate of Authorization No.: 0018438

CONSULTANTS:

MARK	DATE	DESCRIPTION

STATE OF NEW YORK · ANTHONY WOONGJIN KIM · 096392 · LICENSED PROFESSIONAL ENGINEER

ANTHONY WOONGJIN KIM, P.E.
06/30/2027 Exp. Date
IN PROFESSIONAL ENGINEER LIC. No. 0096392
THE TRANSFERABILITY OF THIS DOCUMENT EXCEPT BY A LICENSED PROFESSIONAL IS ILLEGAL

DESIGNED BY:	DRAWN BY:	CHECKED BY:	REVIEWED BY:
LL	LL	LK	-
PROJECT No: WPSD2203	DATE: FEBRUARY 2025	SCALE: AS SHOWN	

CLIENT
WHITE PLAINS CITY SCHOOL DISTRICT

HIGH SCHOOL ADDITION

White Plains Public Schools · WP · REAL LIFE LEARNING

66-22-00-01-0-016-030

CONTRACT
CONTRACT E
ELECTRICAL CONSTRUCTION

STATUS
FINAL BID DOCUMENT

SHEET TITLE
ELECTRICAL GROUND FLOOR LOW VOLTAGE PLAN

DRAWING No.
E 131.00

C:\Users\mwalz\Documents\WPSD2203_CentralH21_M_mwalzSZCVF.rvt
3/21/2025 3:27:18 PM

ELECTRICAL KEY NOTES:

1. CONTRACTOR SHALL COORDINATE WITH CONTRACT 'G' TO INSTALL NEW FLOOR BOX. NEW FLOOR BOX SHALL INCLUDE THREE (3) DUPLEX RECEPTACLES AND ONE DATA DROP (FLOOR BOX SHALL BE LEGRAND "RFB4" OR APROVED EQUAL. PROVIDE AND INSTALL ALL MOUNTING FRAMES AND COMPONENTS AS REQUIRED). COORDINATE EXACT LOCATION WITH ARCHITECTS PRIOR TO INSTALLATION.
2. CONTRACTOR SHALL WALL MOUNT FIBER OPTICAL SPLITTER AT 7'-0" AFF. PROVIDE ALL MOUNTING HARDWARE AS REQUIRED. VERIFY EXACT LOCATION WITH SCHOOL DISTRICT PRIOR TO INSTALLATION.

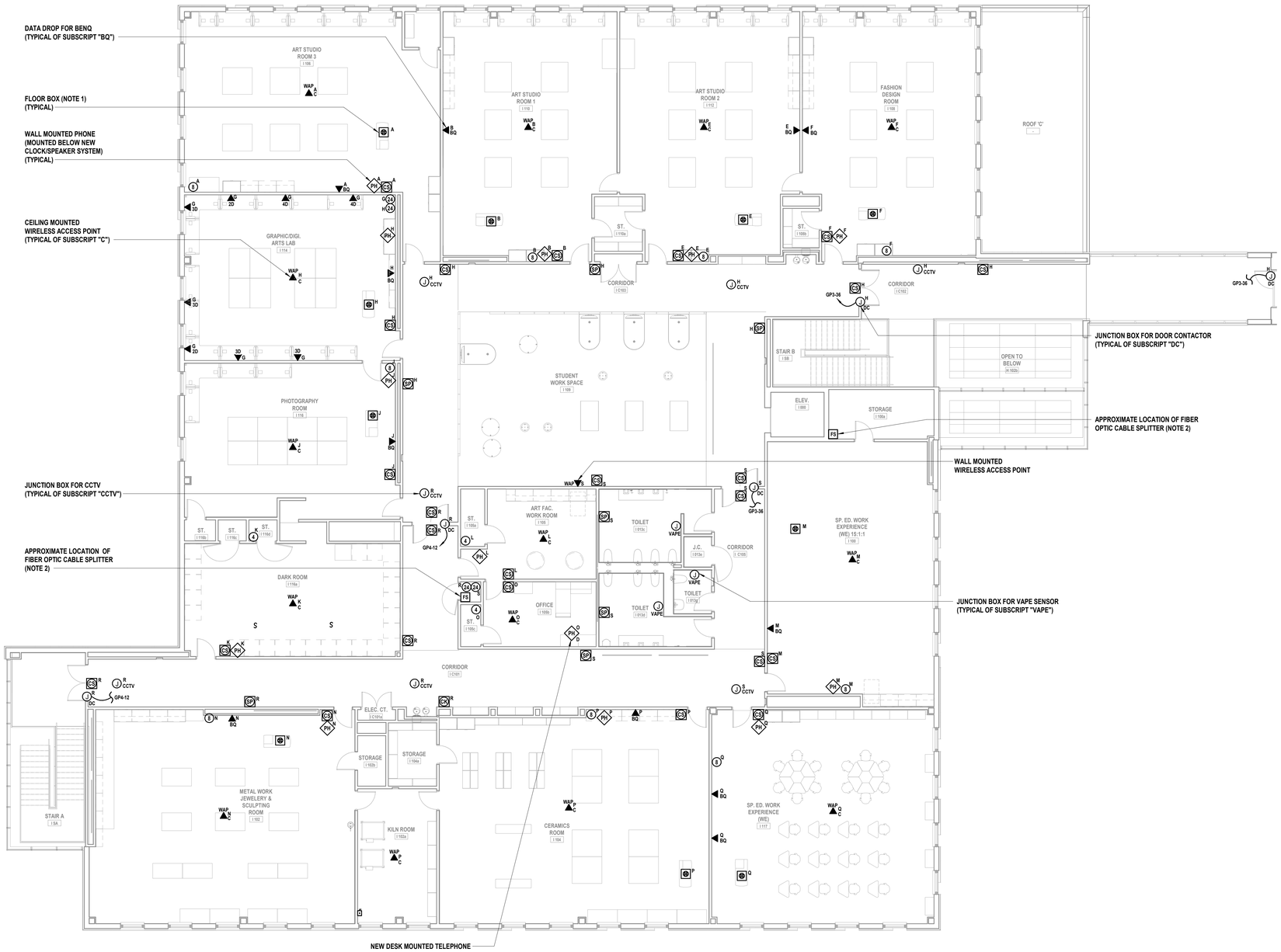

1 **Electrical First Floor Low Voltage Plan**
SCALE: 1/8" = 1'-0"

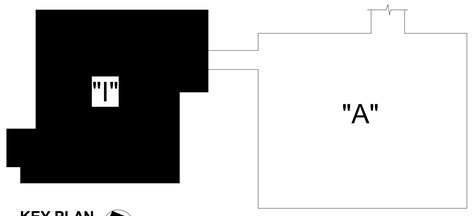

KEY PLAN
SCALE: NTS

H2M architects + engineers
538 Broad Hollow Road, 4th Floor East
Melville, NY 11747
631.756.8000 • www.h2m.com
Land Surveying Certificate of Authorization No.: 0018178
Engineering Certificate of Authorization No.: 0018438

CONSULTANTS:

MARK	DATE	DESCRIPTION

ANTHONY WOONGJIN KIM, P.E.
06/30/2027 Exp. Date
AT PROFESSIONAL ENGINEER LIC. No. 082383
THE TRADITION OF THIS DOCUMENT EXCEPT BY LICENSED PROFESSIONAL IS ILLEGAL

DESIGNED BY:	DRAWN BY:	CHECKED BY:	REVIEWED BY:
LL	LL	Checker	#
PROJECT No: WPSD2203	DATE: FEBRUARY 2025	SCALE: AS SHOWN	

CLIENT
WHITE PLAINS CITY SCHOOL DISTRICT

HIGH SCHOOL ADDITION

66-22-00-01-0-016-030

CONTRACT
CONTRACT E ELECTRICAL CONSTRUCTION

STATUS
FINAL BID DOCUMENT

SHEET TITLE
ELECTRICAL FIRST FLOOR LOW VOLTAGE PLAN

DRAWING No.
E 132.00

C:\Users\mvdz\Documents\WPSD2203_Central\21_M_mvdzSZCVF.rvt
3/21/2025 3:27:34 PM

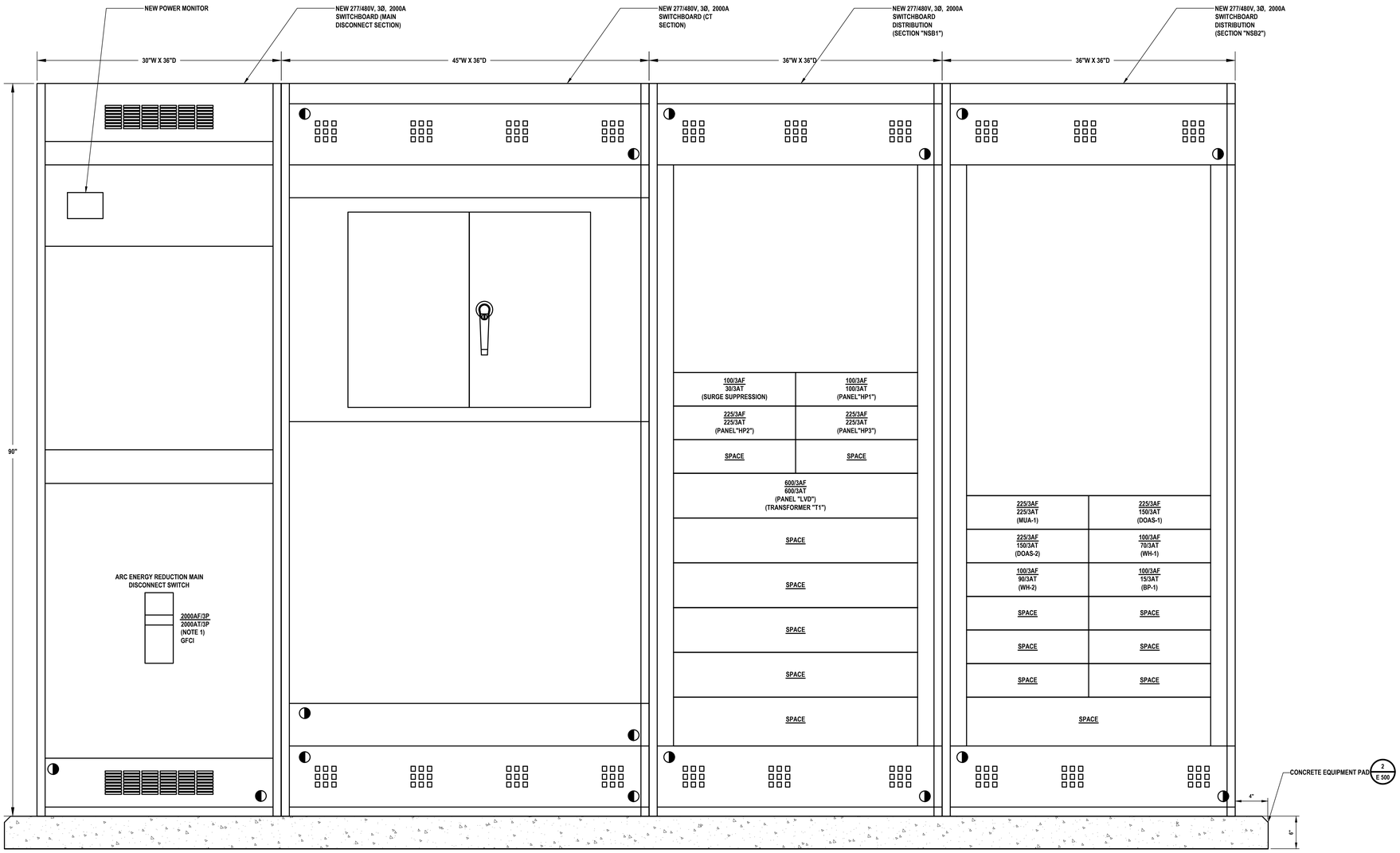

1 Electrical Switchboard Elevation

SCALE:1" = 1'-0"

NOTES:

1. CONTRACTOR SHALL PROVIDE AND INSTALL MAIN CIRCUIT BREAKER WITH ARC REDUCTION MAINTENANCE SWITCH AS PER NEC SECTION 240.87 REQUIREMENT.

H2M architects + engineers

538 Broad Hollow Road, 4th Floor East
Melville, NY 11747
631.756.8000 • www.h2m.com
Land Surveying Certificate of Authorization No.: 0018178
Engineering Certificate of Authorization No.: 0018438

CONSULTANTS:

MARK	DATE	DESCRIPTION

STATE OF NEW YORK · ANTHONY WOONGJIN KIM · 092583 · LICENSED PROFESSIONAL ENGINEER

ANTHONY WOONGJIN KIM, P.E.
NY PROFESSIONAL ENGINEER Lic. No. 092583
Exp. Date 06/30/2027

DESIGNED BY:	DRAWN BY:	CHECKED BY:	REVIEWED BY:
LL	LL	LK	
PROJECT No:	DATE:	SCALE:	
WPSD2203	FEBRUARY 2025	AS SHOWN	

CLIENT

WHITE PLAINS CITY SCHOOL DISTRICT

HIGH SCHOOL ADDITION

White Plains Public Schools · WP · REAL LIFE LEARNING

66-22-00-01-0-016-030

CONTRACT

CONTRACT E
ELECTRICAL CONSTRUCTION

STATUS

FINAL BID DOCUMENT

SHEET TITLE

ELECTRICAL SWITCHBOARD ELEVATIONS

DRAWING No.

E 200.00

C:\Users\mvoltz\Documents\WPSD2203_Central21_M_mvoltz252VF.rvt

3/21/2025 3:27:38 PM

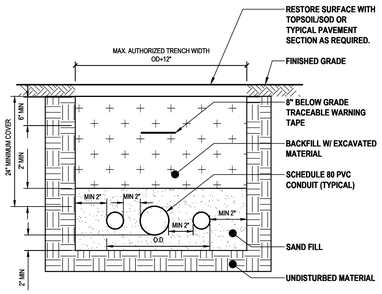

1 Typical Conduit Trench Detail
SCALE: NTS

NOTE:

1. MINIMIZE ALL TRENCH WIDTHS IN ORDER TO AVOID EXCESSIVE DISTURBANCE OF ADJACENT AREAS. TRENCH WALLS SHALL BE VERTICAL. USE SHEET PILING OR A SHEETING BOX TO MAINTAIN THE SPECIFIED TRENCH.

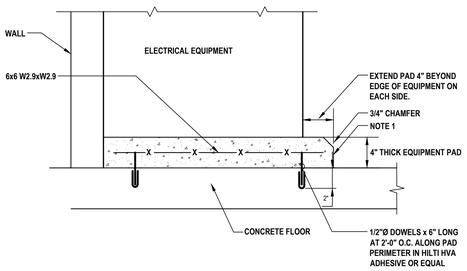

2 Electrical Equipment Concrete Pad
SCALE: NTS

NOTE:

1. CONTRACTOR SHALL PRIME AND PAINT HORIZONTAL SURFACE OF CONCRETE PAD BEFORE INSTALLING EQUIPMENT. COORDINATE EXACT PAINT COLOR WITH ENGINEER AND OWNER. VERTICAL SURFACE ON CONCRETE PAD SHALL BE FINISHED IN SAME MANNER AS SURROUNDING FLOOR SURFACE.

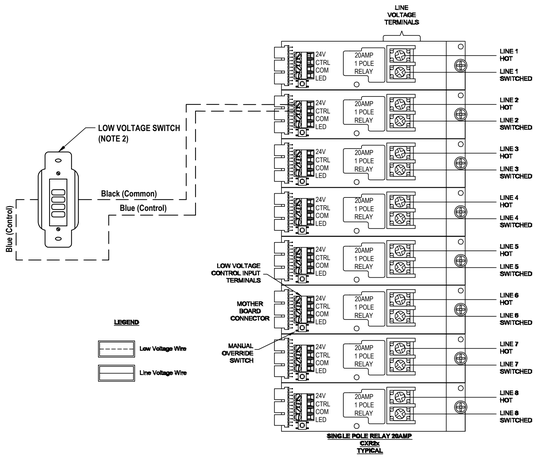

3 Typical CX Panel, 8 Relay Size 120/277V Input (NOTE 1)
SCALE: NTS

NOTES:

1. RELAY COUNT IS FOR REFERENCE ONLY. REFER TO MODEL NUMBER UNDER LIGHTING CONTROLS SCHEDULE FOR TOTAL RELAY COUNT.
2. PROVIDE A FOUR (4) BUTTON SWITCH. CONTRACTOR SHALL HIRE/COMMISSION LIGHTING CONTROL VENDOR AND PROGRAM LIGHTS PER SCHOOL DISTRICT REQUIREMENT.

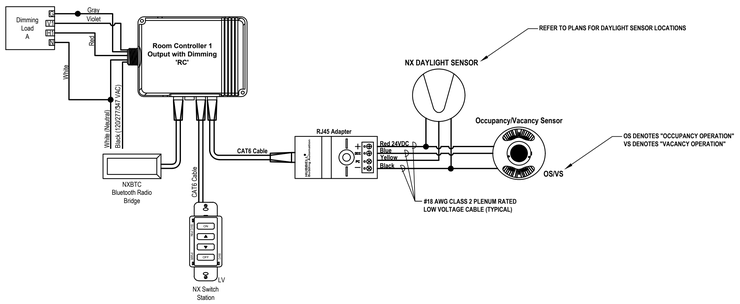

4A Lighting Room Control Detail With Low Voltage Swtiches (Notes LC1, LC2)
SCALE: NTS

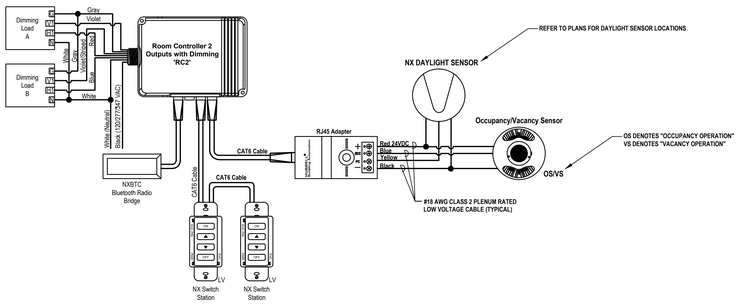

4B Lighting Room Control Detail With Low Voltage Swtiches (Notes LC1, LC2)
SCALE: NTS

LIGHTING CONTROL DETAIL NOTES:

LC1. CONTRACTOR SHALL PROVIDE ALL MATERIALS AND ACCESSORIES AS REQUIRED TO PROVIDE FULL FUNCTIONING NX LIGHTING CONTROL SYSTEM TO FUNCTION AS SHOWN IN THE CONSTRUCTION DOCUMENTS. DESIGN OF THE LIGHTING CONTROL SYSTEM WAS DEVELOPED AROUND THE NX CONTROL SYSTEM. ALL SUBSTITUTE CONTROLS WILL REQUIRE SUBMISSION OF NEW CONTROL LAYOUT, STAMPED BY A PROFESSIONAL ENGINEER. SUBSTITUTE CONTROLS SHALL FUNCTION AS DESIGNED ON THE CONTRACT DOCUMENTS AND CONTRACTOR SHALL GUARANTEE FUNCTIONALITY.

LC2. CONTRACTOR SHALL HIRE A TECHNICIAN (HUBBELL AUTOMATION OR APPROVED EQUAL) TO COMMISSION, PROGRAM AND CALIBRATE THE NX LIGHTING CONTROL SYSTEM. LIGHTING CONTROL SYSTEM BE PROGRAMMED FOR THE LIGHT FIXTURE TO OUTPUT LIGHT LEVELS AS DESCRIBED IN SPECIFICATION SECTION 265000, SUBSECTION 2.03.

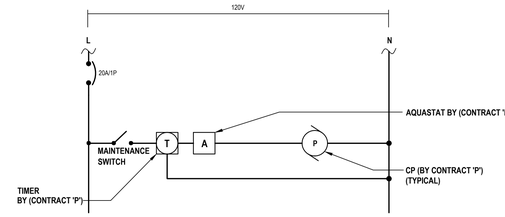

5 Circulating Pump CP-1 & CP-2 Control Diagram
SCALE: NTS

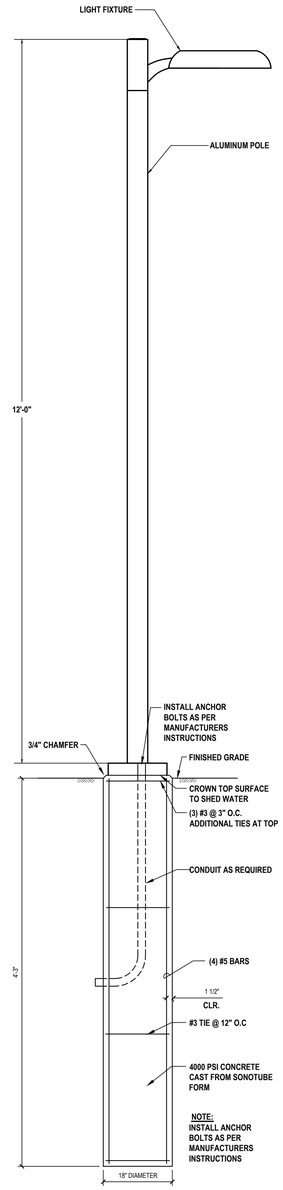

6 Light Pole Base Detail
SCALE: NTS

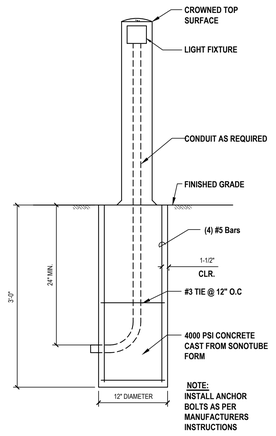

7 Bollard Light Pole Base Detail
SCALE: NTS

H2M architects + engineers
538 Broad Hollow Road, 4th Floor East
Melville, NY 11747
631.756.8000 • www.h2m.com
Land Surveying Certificate of Authorization No.: 0018178
Engineering Certificate of Authorization No.: 0018438

CONSULTANTS:

MARK	DATE	DESCRIPTION

STATE OF NEW YORK · ANTHONY WOONGJIN KIM · 065392 · PROFESSIONAL ENGINEER

ANTHONY WOONGJIN KIM, P.E. 065392 Exp. Date
IN PROFESSIONAL ENGINEER LIC. No. 065392
THE CREATION OF THIS DOCUMENT EXCEPT BY A LICENSED PROFESSIONAL IS ILLEGAL

DESIGNED BY:	DRAWN BY:	CHECKED BY:	REVIEWED BY:
PROJECT No: WPSD2203	DATE: FEBRUARY 2025	SCALE: AS SHOWN	

CLIENT
WHITE PLAINS CITY SCHOOL DISTRICT

HIGH SCHOOL ADDITION

White Plains Public Schools · WP · REAL LIFE LEARNING

66-22-00-01-0-016-030

CONTRACT
CONTRACT E ELECTRICAL CONSTRUCTION

STATUS
FINAL BID DOCUMENT

SHEET TITLE
ELECTRICAL DETAILS (SHEET 1 OF 2)

DRAWING No.
E 500.00

C:\Users\mvolz\Documents\WPSD2203_Central21_M_mvolz52ZVF.rvt
3/21/2025 3:27:43 PM

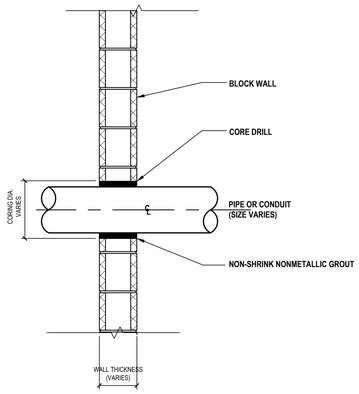

1 Typical Penetration Through Block Wall
SCALE: NTS

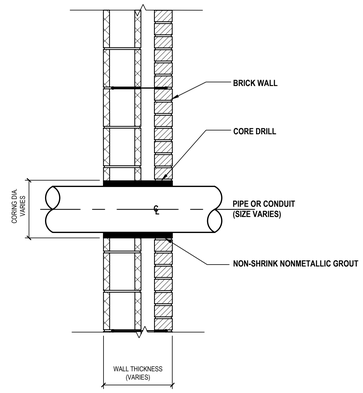

2 Typical Penetration Through Brick Wall
SCALE: NTS

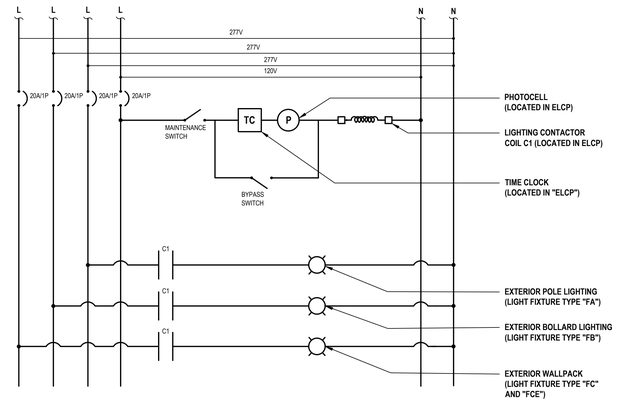

3a Exterior Lighting Control Panel "ELCP" Schematic
SCALE: NTS

NOTES:

1. PROVIDE AND INSTALL NEW LIGHTING CONTROLS, CONTROL WIRING, RELAYS, CONTACTORS, AND SENSORS. INSTALL CONTROLS AND CONTACTORS IN NEW NEMA 1 HINGED DOOR ENCLOSURE. PROVIDE LOCKABLE HANDLE.
2. FUNCTION NAMEPLATE DESCRIPTION:
   MAINTENANCE SWITCH - TURN TO "ON" POSITION FOR NORMAL OPERATION. TURN TO OFF POSITION TO PREVENT LIGHTS FROM TURNING ON
   BYPASS SWITCH - TURN TO "OFF" POSITION FOR NORMAL OPERATION. TURN TO "ON" POSITION TO TURN ON LIGHT FIXTURES. (MAINTENANCE SWITCH MUST BE IN "ON" POSITION).

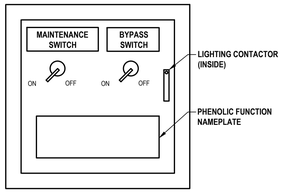

3b Exterior Lighting Control Panel "ELCP"
SCALE: NTS

NOTES:

1. PROVIDE AND INSTALL NEW LIGHTING CONTROLS, CONTROL WIRING, RELAYS, CONTACTORS, AND SENSORS. INSTALL CONTROLS AND CONTACTORS IN NEW NEMA 1 HINGED DOOR ENCLOSURE. PROVIDE LOCKABLE HANDLE.
2. FUNCTION NAMEPLATE DESCRIPTION:
   MAINTENANCE SWITCH - TURN TO "ON" POSITION FOR NORMAL OPERATION. TURN TO OFF POSITION TO PREVENT LIGHTS FROM TURNING ON
   BYPASS SWITCH - TURN TO "OFF" POSITION FOR NORMAL OPERATION. TURN TO "ON" POSITION TO TURN ON LIGHT FIXTURES. (MAINTENANCE SWITCH MUST BE IN "ON" POSITION).

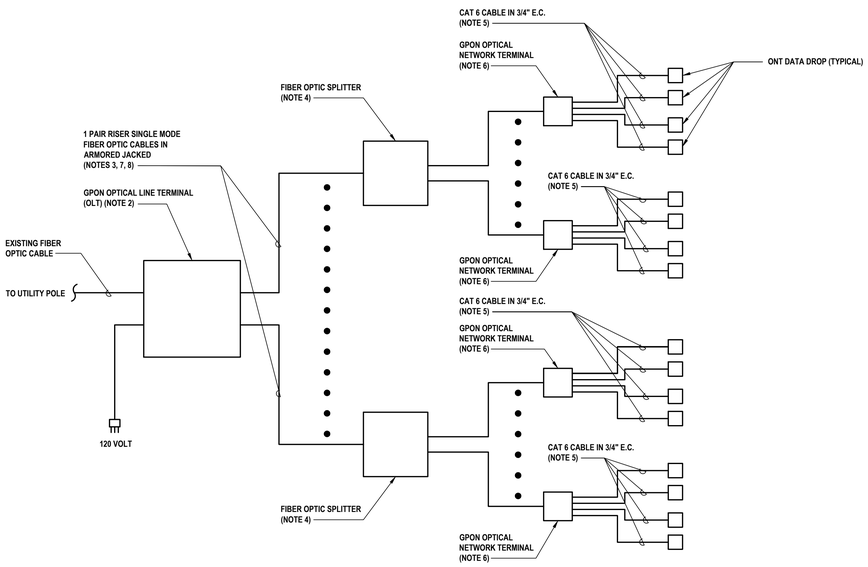

4 Typical GPON Network Single Line (Note F1)
SCALE: NTS

SINGLE LINE NOTES:

1. REFER TO FLOOR PLANS AND SPECIFICATIONS FOR QUANTITIES, LOCATIONS AND ADDITIONAL INFORMATION. WAPS AND ONTS SHALL BE PROVIDED BY SCHOOL DISTRICT AND INSTALLED BY THE CONTRACTOR. THE CONTRACTOR SHALL PROVIDE AND INSTALL ALL MOUNTING HARDWARE AS REQUIRED FOR A SECURE INSTALLATION AND AS STATED IN THE SPECIFICATIONS AND ON THE DRAWINGS. THE CONTRACTOR SHALL PROVIDE CONDUIT AS STATED IN THE SPECIFICATIONS.
2. OLTS SHALL BE PROVIDED BY SCHOOL DISTRICT AN INSTALLED BY CONTRACTOR. THE CONTRACTOR SHALL BE RESPONSIBLE FOR TERMINATING ALL FIBER CABLES TO THE OLT.
3. CONTRACTOR SHALL COORDINATE EXACT TYPES AND QUANTITIES OF FIBER OPTIC CABLE WITH SCHOOL DISTRICT PRIOR TO ORDERING AND INSTALLING. CONTRACTOR SHALL PROVIDE AND INSTALL FIBER CABLE AND CONDUIT. CONTRACTOR SHALL CORE DRILL FLOOR AND WALLS AS REQUIRED TO INSTALL NEW CABLE.
4. FIBER OPTIC SPLITTERS AND ENCLOSURES SHALL BE PROVIDED AND INSTALLED BY THE CONTRACTOR AT LOCATIONS SHOWN ON THE CONTRACT DRAWINGS. THE CONTRACTOR IS RESPONSIBLE FOR FOR POPULATING THE ENCLOSURES WITH THE FIBER SPLITTERS, INSTALLING THE ENCLOSURES, TERMINATING ALL FIBER CABLES, AND LABELING ALL FIBER OPTIC CABLE. PROVIDE ALL MOUNTING HARDWARE AND LABELS AS REQUIRED. COORDINATE ALL MOUNTING LOCATIONS AND HEIGHTS WITH SCHOOL DISTRICT PRIOR TO INSTALLATION.
5. CAT 6 CABLE SHALL BE PROVIDED AND INSTALLED BY THE CONTRACTOR. ALL CAT 6 CABLE SHALL BE TESTED BY THE CONTRACTOR PRIOR TO INSTALLATION. CONTRACTOR SHALL PROVIDE AND INSTALL RJ45 JACKS ON ALL CABLES.
6. ONTS SHALL BE PROVIDED BY SCHOOL DISTRICT AND INSTALLED BY THE CONTRACTOR. COORDINATE ALL MOUNTING LOCATIONS AND HEIGHTS WITH SCHOOL DISTRICT PRIOR TO INSTALLATION.
7. NO ELBOWS AND LB FITTINGS ARE ALLOWED ON CONDUITS SCHEDULED FOR FIBER OPTIC CABLING. PULL BOXES SHALL BE PLACED EVERY 130 FEET IN A STRAIGHT CONDUIT RUN. THE INSIDE RADIUS OF ANY BEND IN THE CONDUIT SHALL BE AT LEAST EIGHT (8) TIMES THE INTERNAL DIAMETER. ONLY APPROVED PULL LUBRICANTS ARE TO BE USED AND SHALL BE USED AT ALL TIMES.
8. THE CONTRACTOR SHALL TEST ALL FIBER OPTIC CABLE PRIOR TO INSTALLATION. THE CONTRACTOR SHALL NOTIFY THE CONSTRUCTION MANAGER AND THE ENGINEER, IN WRITING, OF ANY FIBER THAT DOES NOT PASS TESTING PRIOR TO INSTALLTION.

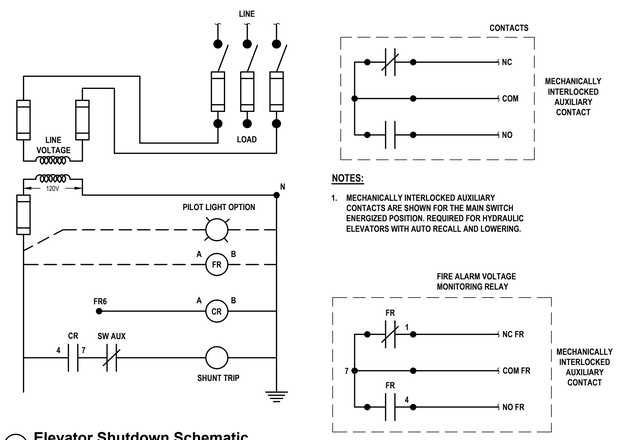

NOTES:

1. MECHANICALLY INTERLOCKED AUXILIARY CONTACTS ARE SHOWN FOR THE MAIN SWITCH ENERGIZED POSITION. REQUIRED FOR HYDRAULIC ELEVATORS WITH AUTO RECALL AND LOWERING.

5 Elevator Shutdown Schematic (Cooper Bussman - Power Module Switch)
SCALE: N.T.S.

H2M architects + engineers
538 Broad Hollow Road, 4th Floor East
Melville, NY 11747
631.756.8000 • www.h2m.com
Land Surveying Certificate of Authorization No.: 0018178
Engineering Certificate of Authorization No.: 0018438

CONSULTANTS:

MARK	DATE	DESCRIPTION

STATE OF NEW YORK · ANTHONY WOONGJIN KIM · 065392 · LICENSED PROFESSIONAL ENGINEER

ANTHONY WOONGJIN KIM, P.E.
065392
Exp. Date
AT PROFESSIONAL ENGINEER LIC. No. 065392
THE TRACING IS NOT THE DOCUMENT EXCEPT BY A LICENSED PROFESSIONAL ENGINEER

DESIGNED BY:	DRAWN BY:	CHECKED BY:	REVIEWED BY:
LL	LL	AWK	-
PROJECT No: WPSD2203	DATE: FEBRUARY 2025	SCALE: AS SHOWN	

CLIENT
WHITE PLAINS CITY SCHOOL DISTRICT

HIGH SCHOOL ADDITION

66-22-00-01-0-016-030

CONTRACT
CONTRACT E
ELECTRICAL CONSTRUCTION

STATUS
FINAL BID DOCUMENT

SHEET TITLE
ELECTRICAL DETAILS (SHEET 2 OF 2)

DRAWING No.
E 501.00

INTERIOR LIGHTING FIXTURE SCHEDULE

DESIGNATION	SYMBOL	MFG.	MODEL NUMBER	TYPE	WATTS	COLOR TEMP.	VOLT	LUMENS	MOUNTING	REMARKS	MOUNTING HEIGHT
F1		PINNACLE ARCHITECTURAL LIGHTING	LU22S-840MO-G9-U-FSD-1-W	LED	31	4000K	UNV	3035	RECESSED	-	CEILING
F1E		PINNACLE ARCHITECTURAL LIGHTING	LU22S-840MO-G9-U-FSD-1-E-W	LED	31	4000K	UNV	3035	RECESSED	EMERGENCY BATTERY BACKUP WITH 90 MINUTES OF BACKUP-CAPACITY	CEILING
F2		PINNACLE ARCHITECTURAL LIGHTING	EV3D-A-840HO-S8-G9-U-FSD-1-0 -W	LED	195 (6.1/FT)	4000K	UNV	24000 (750/FT)	RECESSED	-	CEILING
F3		COLUMBIA LIGHTING	SRP22-40-MWHE-G-EDU-NXW-R56	LED	16	4000K	UNV	2098	RECESSED	-	CEILING
F3E		COLUMBIA LIGHTING	SRP22-40-MWHE-G-EDU-ELL14-NXW-R56	LED	16	4000K	UNV	2098	RECESSED	EMERGENCY BATTERY BACKUP WITH 90 MINUTES OF BACKUP-CAPACITY	CEILING
F4		COLUMBIA LIGHTING	MPS4-40HL-FW-EDU-NXWSM-R56	LED	42	4000K	UNV	5452	SURFACE		CEILING
F4E		COLUMBIA LIGHTING	MPS4-40HL-FW-EDU-ELL14-NXW -R56	LED	42	4000K	UNV	5452	SURFACE	EMERGENCY BATTERY BACKUP WITH 90 MINUTES OF BACKUP-CAPACITY	CEILING
F5		LSI	ADL-FS1-UNV-4S-HAZ	LED	19	4000K	UNV	1551	RECESSED	-	CEILING
F5E		LSI	ADL-FS1-UNV-4S-HAZ (786277)	LED	19	4000K	UNV	1551	RECESSED	EMERGENCY BATTERY BACKUP WITH 90 MINUTES OF BACKUP-CAPACITY	CEILING
F6		PINNACLE ARCHITECTURAL LIGHTING	EX3DI-A-WHE-WHE-840-840-4 -AC120ST-U-FSD-1-COLOR	LED	32 (8/FT)	4000K	UNV	2000 (500/FT)	PENDANT		NOTE L1
F6E		PINNACLE ARCHITECTURAL LIGHTING	EX3DI-A-WHE-WHE-840-840-4 -AC120ST-U-FSD-1-1FSB-COLOR	LED	32 (8/FT)	4000K	UNV	2000 (500/FT)	PENDANT	EMERGENCY BATTERY BACKUP WITH 90 MINUTES OF BACKUP-CAPACITY	NOTE L1
F7		PINNACLE ARCHITECTURAL LIGHTING	EX3D-A-840HO-6-AC120ST-U-FSD-1-COLOR	LED	41 (6.8/FT)	4000K	UNV	4500 (750/FT)	PENDANT		NOTE L1
F7E		PINNACLE ARCHITECTURAL LIGHTING	EX3D-A-840HO-6-AC120ST-U-FSD-1-1FSB-COLOR	LED	41 (6.8/FT)	4000K	UNV	4500 (750/FT)	PENDANT	EMERGENCY BATTERY BACKUP WITH 90 MINUTES OF BACKUP-CAPACITY	NOTE L1
F8		PINNACLE ARCHITECTURAL LIGHTING	EX3D-A-840MOD-S6-AC120ST-U -FSD-1-0-COLOR	LED	108 (4.5/FT)	4000K	UNV	12000 (500/FT)	PENDANT	MOD - SQUARE (4000K CRT)	NOTE L1
F9		INTENSE LIGHTING	ITLP30-L1-35S-COLOR-FL-R56 -IS4-COLOR-IS103X-ISP48-COLOR	LED	30	3500K	UNV	850	PENDANT	TRACK LIGHT	NOTE L1
F10		LITECONTROL	SAE106-P-LPA-4'-8-SOF-COLOR -40K-130-8D-D01-1C-UNV-FA1-L1 -ECSS-CBX	LED	11	4000K	UNV	5200 (1300/FT)	SURFACE		CEILING
F10E		LITECONTROL	SAE106-P-LPA-4'-8-SOF-COLOR -40K-130-8D-D01-1C-UNV-FA1-EF-L1-ECSS-CBX	LED	11	4000K	UNV	5200 (1300/FT)	SURFACE	EMERGENCY BATTERY BACKUP WITH 90 MINUTES OF BACKUP-CAPACITY	CEILING
F11		PINNACLE ARCHITECTURAL LIGHTING	LU22S-840LO-G9-U-FSD-1-W	LED	20	4000K	UNV	1945	RECESSED		CEILING
F12		INTENSE LIGHTING	MXG2PSD-2-L0-41-D101-36 -COLOR-W-SL-C96	LED	10	4100K	UNV	850	PENDANT		NOTE L1
F13		EXO OUTDOOR LIGHTING	VWGL-2	LED	20		UNV	2722	SURFACE (WALL)		NOTE L1
F14		USAI LIGHTING	B4SCM-12C3-40KS-70-S-WH -NC-SB-UNV-D6E-UA2	LED	12	4000K	UNV	765	RECESSED		CEILING
F14E		USAI LIGHTING	B4SCM-12C3-40KS-70-S-WH -NC-SB-UNV-D6E-UA2-EM	LED	12	4000K	UNV	765	RECESSED	EMERGENCY BATTERY BACKUP WITH 90 MINUTES OF BACKUP-CAPACITY	CEILING
F15		KIM LIGHTING	PVNT-1-2-25-40K8-D01-UNV -C-COLOR-EM	LED	25	4000K	UNV	3800	SURFACE	EMERGENCY BATTERY BACKUP WITH 90 MINUTES OF BACKUP-CAPACITY	8'-0" A.F.F
F16E		PINNACLE LIGHTING	EV3D-A-840VHO-4-G9-U-FSD-1 -FSB-E-COLOR	LED	32 (7.9/FT)	4000K	UNV	4000 (1000/FT)	RECESSED	EMERGENCY BATTERY BACKUP WITH 90 MINUTES OF BACKUP-CAPACITY	CEILING
F17		BETACALCO LIGHTING	RGTP1P06-LMA0880-LMB0440-CR9 0-CTA40-CTB40-UD0-V1-DA01 -DB01-SS1-FA20-CF20-APOO-CS1 -C0	LED	142	4000K	UNV	13000	PENDANT		16'-3" A.F.F
F18		COLUMBIA LIGHTING	MPS4-40ML-FW-EDU-ELL14 -NXWSM	LED	32	4000K	UNV	4277	SURFACE (WALL)	EMERGENCY BATTERY BACKUP WITH 90 MINUTES OF BACKUP-CAPACITY	7'-6" A.F.F
F21		USAI LIGHTING	C4SBA-20X3-40KS-45-S-ZW-UNV -D6F	LED	20	4000K	UNV	1075	RECESSED		CEILING
F21E		USAI LIGHTING	C4SBA-20X3-40KS-45-S-ZW-UNV -D6F-EM	LED	20	4000K	UNV	1075	RECESSED	EMERGENCY BATTERY BACKUP WITH 90 MINUTES OF BACKUP-CAPACITY	CEILING
EX		DUAL LITE	CCEL	LED	1.7	-	UNV	-	SURFACE	EMERGENCY BATTERY BACKUP WITH 90 MINUTES OF BACKUP-CAPACITY	7'-6" A.F.F
EXC		DUAL LITE	CCEL	LED	1.7	-	UNV	-	SURFACE	EMERGENCY BATTERY BACKUP WITH 90 MINUTES OF BACKUP-CAPACITY	CEILING

LIGHTING FIXTURE SCHEDULE NOTES:

L1. REFER TO ELECTRICAL SHEETS E120-122 FOR MOUNTING HEIGHT ADDITIONAL INFORMATION.

EXTERIOR LIGHTING FIXTURE SCHEDULE

DESIGNATION	SYMBOL	MANUFACTURER	MODEL NUMBER	TYPE	WATTS	COLOR TEMP	VOLTAGE	LUMENS	MOUNTING	REMARKS	MOUNTING HEIGHT	DETAIL
FA		KIM LIGHTING	FIXTURE MODEL #: UR20-96L-30-3K7-3-UNV-A46 -COLOR POLE MODEL #: PRA12-5125-ASA-COLOR	LED	30	3000K	UNV	3369	POLE	-	12'-0" A.F.G	6 / E 500
FB		KIM LIGHTING	PA7R-CT-CH3-12L-010-3K7	LED	14	3000K	UNV	1094	BOLLARD	BOLLARD LIGHTING	-	7 / E 500
FC		KIM LIGHTING	CY1-25-3K7-3-4-WG-R	LED	26	3000K	UNV	2117	SURFACE-WALL		12'-6" A.F.G	
FCE		KIM LIGHTING	CY1-25-3K7-3-4-WG-R-EM	LED	26	3000K	UNV	2117	SURFACE-WALL	EMERGENCY BATTERY BACKUP WITH 90 MINUTES OF BACKUP-CAPACITY	12'-6" A.F.G	

LIGHTING CONTROLS SCHEDULE

TYPE	MANUFACTURER	MODEL NUMBER	VOLTAGE	MOUNTING	MOUNTING HEIGHT	REMARKS
VS	CURRENT	NXOS-OM-DT2	24V	SURFACE	CEILING	CEILING-MOUNTED VACANCY SENSOR
RC2	CURRENT	NXRCFX2-2RD	120-277V	RECESSED	ABOVE CEILING	DUAL RELAY NX ROOM CONTROLLER WITH DIMMING
S_{VS}	CURRENT	LHRDMTS1-N-WH	120-277V	RECESSED (WALL MOUNTED)	46" AFF	WALL MOUNTED VACANCY SENSOR
S_{LV}	CURRENT	NXSW-ORLO-WH	24V	RECESSED (WALL MOUNTED)	46" AFF	WALL MOUNTED LOW VOLTAGE DIMMING SWITCH
DS	CURRENT	NXDS	24V	SURFACE	CEILING	CEILING-MOUNTED DAYLIGHT SENSOR (NOTES LF1, LF2)
RC	CURRENT	NXRCFX2-1RD	120-277V	RECESSED	ABOVE CEILING	DUAL RELAY NX ROOM CONTROLLER WITH DIMMING
	NX LIGHTING CONTROLS	NXP2-PNL-8-8-U-S	LINE	SURFACE (WALL)	COORDINATE IN FIELD	NX AREA EXTERIOR LIGHTING CONTROL PANEL
	NX LIGHTING CONTROLS	CX-08-2-S-08-SP-N -CXDIMCONTRBD	LINE	SURFACE (WALL)	COORDINATE IN FIELD	NX AREA PRESENTATION SPACE INTERIOR LIGHTING CONTROL PANEL
PC	INTERMATIC	K42-SW-A 7 K4141C	120V	SURFACE	AT ROOF LINE	SWIVEL MOUNT AND PHOTOCELL
TC	TORK	DG100A	120V	SURFACE (WALL)	"ELCP"	TIME CLOCK

LIGHTING CONTROLS SCHEDULE NOTES:

LG1. CONTRACTOR SHALL LOCATE AND MOUNT DAYLIGHT SENSOR AS PER MANUFACTURERS RECOMMENDATIONS. CONTRACTOR SHALL HIRE A TECHNICIAN (HUBBELL AUTOMATION OR APPROVED EQUAL) TO COMMISSION AND CALIBRATE THE DAYLIGHT SENSOR EQUIPMENT AT NIGHT TO FUNCTION AS MAINTAIN THE LIGHTING LEVEL AS PER SPECIFICATIONS. SUBSCRIPT "DS" INDICATED LIGHT FIXTURES TO BE CONTROLLED BY DAYLIGHT SENSOR.

LG2. CONTRACTOR SHALL NOTE THAT "DS" DENOTES DAYLIGHT ZONES SPECIFIED ON FLOOR PLANS. PLEASE NOTE THAT THE DAYLIGHT SENSOR IN THE ROOM ONLY ENCOMPASSES THE FIXTURES DENOTED WITH "DS" IN THAT ROOM.

PRESENTATION SPACE INTERIOR LIGHTING CONTROL PANEL "ILCP"

RELAY	VOLTAGE/POLE	PANEL-CIRCUIT No.	LOAD	CONTROLS
1	277/1	HP2-3	RIGHT WALKWAY DOWN LIGHTS	LOW VOLTAGE DIMMER SWITCH
2	277/1	HP2-3	LEFT WALKWAY DOWN LIGHTS	LOW VOLTAGE DIMMER SWITCH
3	277/1	HP2-3	BACK AREA DOWN LIGHTS	LOW VOLTAGE DIMMER SWITCH
4	277/1	HP2-3	SEATING AREA DOWN LIGHTS	LOW VOLTAGE DIMMER SWITCH
5	277/1	HP2-3	FRONT DOWN LIGHTS	LOW VOLTAGE DIMMER SWITCH
6	-	-	SPARE	SPARE
7	-	-	SPARE	SPARE
8	-	-	SPARE	SPARE

H2M architects + engineers

538 Broad Hollow Road, 4th Floor East
Melville, NY 11747
631.756.8000 • www.h2m.com
Land Surveying Certificate of Authorization No.: 0018178
Engineering Certificate of Authorization No.: 0018438

CONSULTANTS:

MARK	DATE	DESCRIPTION

STATE OF NEW YORK · ANTHONY WOONGJIN KIM · 096392027 · LICENSED PROFESSIONAL ENGINEER

ANTHONY WOONGJIN KIM, P.E.
096392027 Exp. Date
AI PROFESSIONAL ENGINEER Lic. No. 0039383

"IN THE ENTERTAINMENT OF THIS DOCUMENT EXCEPT BY LICENSED PROFESSIONAL IS A VIOLATION OF THE LAW."

DESIGNED BY:	DRAWN BY:	CHECKED BY:	REVIEWED BY:
LL	LL		
PROJECT No: WPSD2203	DATE: FEBRUARY 2025	SCALE: AS SHOWN	

CLIENT

WHITE PLAINS CITY SCHOOL DISTRICT

HIGH SCHOOL ADDITION

White Plains Public Schools · WP · REAL LIFE LEARNING

66-22-00-01-0-016-030

CONTRACT

CONTRACT E
ELECTRICAL CONSTRUCTION

STATUS

FINAL BID DOCUMENT

SHEET TITLE

ELECTRICAL LIGHTING SCHEDULES

DRAWING No.

E 600.00

C:\Users\mwitz\Documents\WPSD2203_Central(21_M_mwitz)SZKV.rvt
3/21/2025 3:27:54 PM

Name

Panelboard: LVD | Voltage: 120/208V | Phase: 3 | Wire: 4 | A.I.C. Rating: 65,000
Manufacturer: EATON | Mains: 1200A MCB | Mains Rating: 1200 A
Panel Type: PRL4X | Mounting: SURFACE | Options: | Notes:
NEMA Type Enclosure: 1

Load Description	Breaker Option	Trip	Poles	Circ No.	A	B	C	A	B	C	Circ No.	Poles	Trip	Breaker Option	Load Description
PANEL BP		100 A	3	1	2224 VA			7060 VA			2	3	400 A		PANEL CA1
				3		2482 VA			7304 VA		4				
				5			4756 VA			6476 VA	6				
PANEL GP1		150 A	3	7	10160 VA			10179 VA			8	3	150 A		PANEL DA
				9		10230 VA			11404 VA		10				
				11			8623 VA			9623 VA	12				
PANEL GP2		150 A	3	13	6206 VA			11108 VA			14	3	150 A		PANEL GP3
				15		8456 VA			11108 VA		16				
				17			7506 VA			11244 VA	18				
PANEL GP4		150 A	3	19	15522 VA			5470 VA			20	3	150 A		PANEL GP5
				21		14938 VA			7853 VA		22				
				23			14244 VA			5743 VA	24				
SPARE	--	20 A	1	25	0 VA			8410 VA			26	3	150 A		PANEL LS1
SPARE	--	20 A	1	27		0 VA			8320 VA		28				
SPARE	--	20 A	1	29			0 VA			9250 VA	30				
SPACE	--	--	3	31	--			--			32	3	--	--	SPACE
				33		--			--		34				
				35			--			--	36				
SPACE	--	--	3	37	--			--			38	3	--	--	SPACE
				39		--			--		40				
				41			--			--	42				

Connected Totals: A 76.2 kVA; B 81.8 kVA; C 77.3 kVA
Total: 235.3 kVA
Amps 653 A

(All Phases to be balanced to within 7% Actual Load Totals)

Breaker Option
AS - Powerlink AS Breaker
LO - Handle Lock-off Device
ST - Shunt Trip Type
AUX - Auxillary Contacts
PA - Handle Padlock Attchment
GFCI - Ground Fault Circuit Interrupter
HACR - Heating, A/C & Refrigeration
SF - Subfeed
TC - Time Clock Control

Name

Panelboard: GP1 | Voltage: 120/208V | Phase: 3 | Wire: 4 | A.I.C. Rating: 22,000
Manufacturer: EATON | Mains: 150A MCB | Mains Rating: 150 A
Panel Type: PRL1X | Mounting: SURFACE | Options: | Notes:
NEMA Type Enclosure: 1

Load Description	Breaker Option	Trip	Poles	Circ No.	A	B	C	A	B	C	Circ No.	Poles	Trip	Breaker Option	Load Description
CORR. IC004 WATER FOUNTAIN	GFCI	20 A	1	1	370 VA			540 VA			2	1	20 A		CLASSROOM I013 FLOORBOX
CLASSROOM I013 RECEPT		20 A	1	3		900 VA			900 VA		4	1	20 A		CLASSROOM I013 RECEPT
CLASSROOM I014 FLOORBOX		20 A	1	5			1080 VA			540 VA	6	1	20 A		CLASSROOM I014 FLOORBOX
CLASSROOM I014 RECEPT.		20 A	1	7	540 VA			900 VA			8	1	20 A		CLASSROOM I014 RECEPT.
CLASSROOM I015 FLOORBOX		20 A	1	9		540 VA			720 VA		10	1	20 A		CLASSROOM I015 RECEPT.
EXTERIOR RECEPT.		20 A	1	11			180 VA			540 VA	12	1	20 A		CORRIDOR IC004 RECEPT.
CLASSROOM I015 RECEPT.		20 A	1	13	720 VA			1080 VA			14	1	20 A		CLASSROOM I015 FLOORBOX
SP. ED I019 RECEPT.		20 A	1	15		900 VA			720 VA		16	1	20 A		LOBBY IL001 RECEPT.
RM I008C RECEPT.		20 A	1	17			900 VA			540 VA	18	1	20 A		S.T.E.A.M. RM I008 RECEPT.
CORR. IC002 DOOR CONT.		20 A	1	19	1000 VA			1260 VA			20	1	20 A		WORKSPACE I009 RECEPT.
SP. ED I019 FLOORBOX		20 A	1	21		900 VA			900 VA		22	1	20 A		SP. ED I020 RECEPT.
SP. ED I020 RECEPT.		20 A	1	23			900 VA			540 VA	24	1	20 A		SP. ED I020 FLOORBOX
SP. ED I021 RECEPT.		20 A	1	25	900 VA			540 VA			26	1	20 A		SP. ED I021 FLOORBOX
SP. ED I020 RECEPT.		20 A	1	27		720 VA			720 VA		28	1	20 A		SECURITY OFFICE I011 RECEPT.
S.T.E.A.M. RM I008 RECEPT.		20 A	1	29			1028 VA			720 VA	30	1	20 A		CORR. IC006 RECEPT.
S.T.E.A.M. RM I008 RECEPT.		20 A	1	31	720 VA			360 VA			32	1	20 A		STORAGE RM I008B
BC-2, ACI013 (1), (2), (3), ACI011, ACI004	HACR	15 A	2	33		281 VA			374 VA		34	2	15 A	HACR	BC-3, BC-4, ACI019 (1), (2), ACI020, ACI021 (1), (2)
				35			281 VA			374 VA	36				
FIRE SMOKE DAMPER		15 A	1	37	35 VA			540 VA			38	1	20 A		VESTIBULE IV002 RECEPT.
VESTIBULE IV003 DOOR CONT.		20 A	1	39		1000 VA			0 VA		40	1	20 A	--	SPARE
VESTIBULE IV002 DOOR CONT.		20 A	1	41			1000 VA			0 VA	42	1	20 A	--	SPARE
ACIC001, ACIC002, ACIC003 ACIL001, ACIC008, ACI008C	HACR	15 A	2	43	655 VA			0 VA			44	1	20 A	--	SPARE
				45		655 VA			0 VA		46	1	20 A	--	SPARE
SPARE	--	20 A	1	47			0 VA			0 VA	48	1	20 A	--	SPARE
SPARE	--	20 A	1	49	0 VA			0 VA			50	1	20 A	--	SPARE
SPARE	--	20 A	1	51		0 VA			0 VA		52	1	20 A	--	SPARE
SPARE	--	20 A	1	53			0 VA			0 VA	54	1	20 A	--	SPARE

Connected Totals: A 10.2 kVA; B 10.2 kVA; C 8.6 kVA
Total: 29.0 kVA
Amps: 81 A

(All Phases to be balanced to within 7% Actual Load Totals)

Breaker Option
AS - Powerlink AS Breaker
LO - Handle Lock-off Device
ST - Shunt Trip Type
AUX - Auxillary Contacts
PA - Handle Padlock Attchment
GFCI - Ground Fault Circuit Interrupter
HACR - Heating, A/C & Refrigeration
SF - Subfeed
TC - Time Clock Control

Name

Panelboard: GP2 | Voltage: 120/208V | Phase: 3 | Wire: 4 | A.I.C. Rating: 22,000
Manufacturer: EATON | Mains: 150A MCB | Mains Rating: 225 A
Panel Type: PRL1X | Mounting: SURFACE | Options: | Notes:
NEMA Type Enclosure: 1

Load Description	Breaker Option	Trip	Poles	Circ No.	A	B	C	A	B	C	Circ No.	Poles	Trip	Breaker Option	Load Description
EXTERIOR RECEPT.		20 A	1	1	720 VA			720 VA			2	1	20 A		EXTERIOR RECEPT.
PRESENT. RM I002 FLOOR...		20 A	1	3		1440 VA			1440 VA		4	1	20 A		PRESENT. RM I002 FLOOR...
PRESENT. RM I002 FLOOR...		20 A	1	5			1440 VA			1260 VA	6	1	20 A		CORR. IC001,VEST. IV001 RECEPT.
BC-6, ACI017 (1), ACI017 (2), ACI017(A), ACI007	HACR	15 A	2	7	343 VA			540 VA			8	1	20 A		RM 1013J,1013K RECEPT.
				9		343 VA			1440 VA		10	1	20 A		GALLERY RM I007 RECEPT.
PRESENT. RM I002 RECEPT.		20 A	1	11			1260 VA			1800 VA	12	1	20 A		PRESENT. RM I002 RECEPT.
PRESENT. RM I002 FLOOR...		20 A	1	13	1440 VA			180 VA			14	1	20 A		RM I004 VM RECEPT.
CORR. IC001 WATER FOUNTAIN	GFCI	20 A	1	15		370 VA			180 VA		16	1	20 A		RM I004 VM RECEPT.
PRESENT. RM I002 BQ RECEPT.		20 A	1	17			180 VA			582 VA	18	2	15 A	HACR	ACI002 (1), ACI002 (2)
RM I004 VM RECEPT.		20 A	1	19	180 VA			582 VA			20				
TOILET RM I013h HAND DRYER	GFCI	20 A	1	21		1450 VA			1450 VA		22	1	20 A	GFCI	TOILET RM I013I HAND DRYER
TOILET RM I013H-J FLUSH VALV.	GFCI	20 A	1	23			100 VA			540 VA	24	1	20 A		TOILET RM I013H-J LAV. FAUCET
VESTIBULE IV001 DOOR CONTACT		20 A	1	25	1500 VA			0 VA			26	1	20 A	--	SPARE
ACIC001, ACI004	HACR	15 A	2	27		343 VA			0 VA		28	1	20 A	--	SPARE
				29			343 VA			0 VA	30	1	20 A	--	SPARE
SPARE	--	20 A	1	31	0 VA			0 VA			32	1	20 A	--	SPARE
SPARE	--	20 A	1	33		0 VA			0 VA		34	1	20 A	--	SPARE
SPARE	--	20 A	1	35			0 VA			0 VA	36	1	20 A	--	SPARE
SPARE	--	20 A	1	37	0 VA			0 VA			38	1	20 A	--	SPARE
SPARE	--	20 A	1	39		0 VA			0 VA		40	1	20 A	--	SPARE
SPARE	--	20 A	1	41			0 VA			0 VA	42	1	20 A	--	SPARE

Connected Totals: A 6.2 kVA; B 8.5 kVA; C 7.5 kVA
Total: 22.2 kVA
Amps 62 A

(All Phases to be balanced to within 7% Actual Load Totals)

Breaker Option
AS - Powerlink AS Breaker
LO - Handle Lock-off Device
ST - Shunt Trip Type
AUX - Auxillary Contacts
PA - Handle Padlock Attchment
GFCI - Ground Fault Circuit Interrupter
HACR - Heating, A/C & Refrigeration
SF - Subfeed
TC - Time Clock Control

Name

Panelboard: GP3 | Voltage: 120/208V | Phase: 3 | Wire: 4 | A.I.C. Rating: 22,000
Manufacturer: EATON | Mains: 150A MCB | Mains Rating: 225 A
Panel Type: PRL1X | Mounting: SURFACE | Options: | Notes:
NEMA Type Enclosure: 1

Load Description	Breaker Option	Trip	Poles	Circ No.	A	B	C	A	B	C	Circ No.	Poles	Trip	Breaker Option	Load Description
ART RM I110, ST. RM I110A...		20 A	1	1	720 VA			1388 VA			2	1	20 A		ART RM I110 RECEPT.
ART RM I106 RECEPT.		20 A	1	3		1260 VA			1028 VA		4	1	20 A		HEALTHCARE SPACE I100...
ART RM I106 RECEPT.		20 A	1	5			1388 VA			976 VA	6	1	20 A		RM I108,I112 BQ RECEPT.
CORR. IC104 RECEPT.		20 A	1	7	540 VA			1080 VA			8	1	20 A		ART RM I112 RECEPT.
CORR. IC103 RECEPT.		20 A	1	9		1260 VA			360 VA		10	1	20 A		S.T.E.A.M RM I100 FLOOR RECEPT.
FASHION RM I108 RECEPT.		20 A	1	11			1260 VA			1080 VA	12	1	20 A		HEALTHCARE SPACE I100...
HEALTHCARE SPACE I100...		20 A	1	13	900 VA			1080 VA			14	1	20 A		ART RM I110 FLOOR RECEPT.
ART RM I110 REEL RECEPT.		20 A	1	15		720 VA			1080 VA		16	1	20 A		ART RM I110 FLOOR RECEPT.
ART RM I112 FLOOR RECEPT.		20 A	1	17			1080 VA			720 VA	18	1	20 A		ART RM I112 REEL RECEPT.
ART RM I112 FLOOR RECEPT.		20 A	1	19	1080 VA			1080 VA			20	1	20 A		FASHION RM I108 FLOOR RECEPT.
FASHION RM I108 REEL RECEPT.		20 A	1	21		720 VA			1080 VA		22	1	20 A		FASHION RM I108 FLOOR RECEPT.
FASHION RM I108 FLOOR RECEPT.		20 A	1	23			360 VA			360 VA	24	1	20 A		ART RM I112 FLOOR RECEPT.
ART RM I110 FLOOR RECEPT.		20 A	1	25	360 VA			1440 VA			26	1	20 A		ART RM I110 RECEPT.
ART RM I110 RECEPT.		20 A	1	27		1440 VA			1440 VA		28	1	20 A		FASHION RM I108 RECEPT.
ART RM I106 RECEPT.		20 A	1	29			1080 VA			360 VA	30	1	20 A		ROOFTOP CONV. RECEPT.
ART RM I106 RECEPT.		20 A	1	31	360 VA			1080 VA			32	1	20 A		ART RM I106 FLOOR RECEPT.
ART RM I106 RECEPT.		20 A	1	33		540 VA			180 VA		34	1	20 A		ELEVATOR SHAFT RECEPT.
ART RM I106 FLOOR RECEPT.		20 A	1	35			1080 VA			1500 VA	36	1	20 A		CORR. CI102 DOOR CONT.
SPARE	--	20 A	1	37	0 VA			0 VA			38	1	20 A	--	SPARE
SPARE	--	20 A	1	39		0 VA			0 VA		40	1	20 A	--	SPARE
SPARE	--	20 A	1	41			0 VA			0 VA	42	1	20 A	--	SPARE

Connected Totals: A 11.1 kVA; B 11.1 kVA; C 11.2 kVA
Total: 33.5 kVA
Amps 93 A

(All Phases to be balanced to within 7% Actual Load Totals)

Breaker Option
AS - Powerlink AS Breaker
LO - Handle Lock-off Device
ST - Shunt Trip Type
AUX - Auxillary Contacts
PA - Handle Padlock Attchment
GFCI - Ground Fault Circuit Interrupter
HACR - Heating, A/C & Refrigeration
SF - Subfeed
TC - Time Clock Control

Name

Panelboard: GP4 | Voltage: 120/208V | Phase: 3 | Wire: 4 | A.I.C. Rating: 22,000
Manufacturer: EATON | Mains: 150A MCB | Mains Rating: 225 A
Panel Type: PRL1X | Mounting: SURFACE | Options: | Notes:
NEMA Type Enclosure: 1

Load Description	Breaker Option	Trip	Poles	Circ No.	A	B	C	A	B	C	Circ No.	Poles	Trip	Breaker Option	Load Description
METALWORK RM I102 BQ RECEPT.		20 A	1	1	488 VA			1620 VA			2	1	20 A		CORR. IC104 RECEPT.
INFO LAB. I117 BQ RECEPT.		20 A	1	3		1156 VA			360 VA		4	1	20 A		METALWORK RM I102 RECEPT.
METALWORK RM I102 RECEPT.		20 A	1	5			900 VA			1260 VA	6	1	20 A		KILN RM I102A RECEPT.
CERAMICS RM I104 RECEPT.		20 A	1	7	848 VA			900 VA			8	1	20 A		CERAMICS RM I104 RECEPT.
INFO LAB. I117 RECEPT.		20 A	1	9		720 VA			1080 VA		10	1	20 A		INFO. LAB I117 RECEPT.
CORR. IC101 WATER FOUNTAIN	GFCI	20 A	1	11			370 VA			1000 VA	12	1	20 A		CORRIDOR CI101 DOOR CONT.
CU-6	HACR	20 A	2	13	1409 VA			180 VA			14	1	20 A		CERAMICS RM I104 BQ RECEPT.
				15		1409 VA			540 VA		16	1	20 A		METALWORK RM I102 RECEPT.
RM I102 FLOOR RECEPT.		20 A	1	17			1080 VA			1080 VA	18	1	20 A		INFO. LAB I117 RECEPT.
METALWORK RM I102 RECEPT.		20 A	1	19	1080 VA			540 VA			20	1	20 A		CERAMICS RM I104 RECEPT.
RM I102 REEL RECEPT.		20 A	1	21		720 VA			1080 VA		22	1	20 A		RM I102 FLOOR RECEPT.
RM I102 FLOOR RECEPT.		20 A	1	23			360 VA			360 VA	24	1	20 A		CERAMICS RM I104 FLOOR...
CERAMICS RM I104 FLOOR...		20 A	1	25	1440 VA			360 VA			26	1	20 A		CERAMICS RM I104 REEL RECEPT.
CERAMICS RM I104 FLOOR...		20 A	1	27		720 VA			360 VA		28	1	20 A		INFO. LAB I117 FLOOR RECEPT.
INFO. LAB I117 FLOOR RECEPT.		20 A	1	29			720 VA			360 VA	30	1	20 A		INFO. LAB I117 RECEPT.
DARK ROOM I116A RED LIGHT		15 A	1	31	30 VA			456 VA			32	1	15 A	HACR	GEF-1
GEF-2	HACR	15 A	1	33		456 VA			540 VA		34	1	20 A		ROOFTOP CONV. RECEPT.
TEF-1	HACR	15 A	1	35			792 VA			768 VA	36	1	15 A	ST	GEF-3
ACI102, ACI102A, ACI104, ACI117	HACR	15 A	2	37	582 VA			645 VA			38	2	15 A	HACR	ACI105, ACI105B, ACI109, ACI100, ACIC105
				39		582 VA			645 VA		40				
BC-11, BC-12, BC-13, BC-14, BC-15	HACR	15 A	2	41			104 VA			520 VA	42	2	15 A	HACR	ACI104 (1), ACI104 (2)
				43	104 VA			520 VA			44				
KILN		45 A	3	45		4320 VA			0 VA		46	1	20 A	--	SPARE
				47			4320 VA			0 VA	48	1	20 A	--	SPARE
				49	4320 VA			0 VA			50	1	20 A	--	SPARE
ACI100 (1)(2)(3)(4), ACI117 (1)(2)(3)(4)	HACR	15 A	2	51		250 VA			0 VA		52	1	20 A	--	SPARE
				53			250 VA			0 VA	54	1	20 A	--	SPARE

Connected Totals: A 15.5 kVA; B 14.9 kVA; C 14.2 kVA
Total: 44.7 kVA
Amps: 124 A

(All Phases to be balanced to within 7% Actual Load Totals)

Breaker Option
AS - Powerlink AS Breaker
LO - Handle Lock-off Device
ST - Shunt Trip Type
AUX - Auxillary Contacts
PA - Handle Padlock Attchment
GFCI - Ground Fault Circuit Interrupter
HACR - Heating, A/C & Refrigeration
SF - Subfeed
TC - Time Clock Control

Name

Panelboard: GP5 | Voltage: 120/208V | Phase: 3 | Wire: 4 | A.I.C. Rating: 22,000
Manufacturer: EATON | Mains: 150A MCB | Mains Rating: 150 A
Panel Type: PRL1X | Mounting: SURFACE | Options: | Notes:
NEMA Type Enclosure: 1

Load Description	Breaker Option	Trip	Poles	Circ No.	A	B	C	A	B	C	Circ No.	Poles	Trip	Breaker Option	Load Description
MECH. RM I001B RECEPT.		20 A	1	1	1080 VA			900 VA			2	1	20 A		UNION OFFICE I015B RECEPT.
MULTI. SPACE I013 RECEPT.		20 A	1	3		1080 VA			1080 VA		4	1	20 A		UNION OFFICE I015A RECEPT.
MULTI. SPACE I013 FLOOR...		20 A	1	5			540 VA			1440 VA	6	1	20 A		MULTI. SPACE I013 FLOOR...
TOILET RM I011A,B FLUSH VALV.	GFCI	20 A	1	7	60 VA			180 VA			8	1	20 A		ELEV. I000 PIT RECEPT.
MULTI. SPACE I013 RECEPT.		20 A	1	9		1028 VA			2000 VA		10	2	25 A	HACR	UH-2
BC-5, ACI016A, ACI016B, ACI016D, ACI009, ACI012	HACR	15 A	2	11			302 VA			2000 VA	12				
				13	302 VA			624 VA			14	2	20 A		PERIMETER WALL PACKS
BC-1, ACIC015 (1),(2),(3) ACIC014 (1),(2)	HACR	15 A	2	15		374 VA			624 VA		16				
				17			374 VA			0 VA	18	1	30 A		ELEVATOR CAB LIGHTING
UH-1	HACR	25 A	2	19	2000 VA			91 VA			20	1	15 A		MECHANICAL RM I001B CP-1
				21		2000 VA			91 VA		22	1	15 A		MECHANICAL RM I001B CP-2
TOILET RM I011A,B LAV. FAUCET		20 A	1	23			360 VA			1000 VA	24	1	20 A		FACP
ELCP		20 A	1	25	500 VA			0 VA			26	1	20 A	--	SPARE
SPARE	--	20 A	1	27		0 VA			0 VA		28	1	20 A	--	SPARE
SPARE	--	20 A	1	29			0 VA			0 VA	30	1	20 A	--	SPARE
SPARE	--	20 A	1	31	0 VA			0 VA			32	1	20 A	--	SPARE
SPARE	--	20 A	1	33		0 VA			0 VA		34	1	20 A	--	SPARE
SPARE	--	20 A	1	35			0 VA			0 VA	36	1	20 A	--	SPARE
SPARE	--	20 A	1	37	0 VA			0 VA			38	1	20 A	--	SPARE
SPARE	--	20 A	1	39		0 VA			0 VA		40	1	20 A	--	SPARE
SPARE	--	20 A	1	41			0 VA			0 VA	42	1	20 A	--	SPARE

Connected Totals: A 5.5 kVA; B 7.9 kVA; C 5.7 kVA
Total: 19.0 kVA
Amps 53 A

(All Phases to be balanced to within 7% Actual Load Totals)

Breaker Option
AS - Powerlink AS Breaker
LO - Handle Lock-off Device
ST - Shunt Trip Type
AUX - Auxillary Contacts
PA - Handle Padlock Attchment
GFCI - Ground Fault Circuit Interrupter
HACR - Heating, A/C & Refrigeration
SF - Subfeed
TC - Time Clock Control

Name

Panelboard: BP | Voltage: 120/208V | Phase: 3 | Wire: 4 | A.I.C. Rating: 22,000
Manufacturer: EATON | Mains: 100A MCB | Mains Rating: 100 A
Panel Type: PRL1X | Mounting: SURFACE | Options: | Notes:
NEMA Type Enclosure: NEMA1

Load Description	Breaker Option	Trip	Poles	Circ No.	A	B	C	A	B	C	Circ No.	Poles	Trip	Breaker Option	Load Description
RM IB001 RECEPT.		20 A	1	1	720 VA			360 VA			2	1	20 A		RM IB001 RECEPT.
RM IB001 RECEPT.		20 A	1	3		540 VA			798 VA		4	1	20 A		STORAGE RM IB001 LIGHTING
'DH-1' RECEPT.	HACR	20 A	2	5			1144 VA			2468 VA	6	1	20 A		RM IB001 CEILING RECEPT.
				7	1144 VA			0 VA			8	1	20 A	--	SPARE
'DH-2' RECEPT.	HACR	20 A	2	9		1144 VA			0 VA		10	1	20 A	--	SPARE
				11			1144 VA			0 VA	12	1	20 A	--	SPARE
SPARE	--	20 A	1	13	0 VA			0 VA			14	1	20 A	--	SPARE
SPARE	--	20 A	1	15		0 VA			0 VA		16	1	20 A	--	SPARE
SPARE	--	20 A	1	17			0 VA			0 VA	18	1	20 A	--	SPARE
SPARE	--	20 A	1	19	0 VA			0 VA			20	1	20 A	--	SPARE
SPARE	--	20 A	1	21		0 VA			0 VA		22	1	20 A	--	SPARE
SPARE	--	20 A	1	23			0 VA			0 VA	24	1	20 A	--	SPARE
SPARE	--	20 A	1	25	0 VA			0 VA			26	1	20 A	--	SPARE
SPARE	--	20 A	1	27		0 VA			0 VA		28	1	20 A	--	SPARE
SPARE	--	20 A	1	29			0 VA			0 VA	30	1	20 A	--	SPARE

Connected Totals: A 2.2 kVA; B 2.5 kVA; C 4.8 kVA
Total: 9.5 kVA
Amps: 26 A

(All Phases to be balanced to within 7% Actual Load Totals)

Breaker Option
AS - Powerlink AS Breaker
LO - Handle Lock-off Device
ST - Shunt Trip Type
AUX - Auxillary Contacts
PA - Handle Padlock Attchment
GFCI - Ground Fault Circuit Interrupter
HACR - Heating, A/C & Refrigeration
SF - Subfeed
TC - Time Clock Control

Name

Panelboard: ALPBL (EXISTING) | Voltage: 120/208V | Phase: 3 | Wire: 4 | A.I.C. Rating: EXISTING
Manufacturer: EATON | Mains: 225A MCB | Mains Rating: 225 A
Panel Type: PRL2A | Mounting: SURFACE | Options: | Notes:
NEMA Type Enclosure: 1

Load Description	Breaker Option	Trip	Poles	Circ No.	A	B	C	A	B	C	Circ No.	Poles	Trip	Breaker Option	Load Description
EXISTING	--	20 A	1	1	0 VA			0 VA			2	1	20 A	--	EXISTING
EXISTING	--	20 A	1	3		0 VA			0 VA		4	1	20 A	--	EXISTING
EXISTING	--	20 A	1	5			0 VA			0 VA	6	1	20 A	--	EXISTING
EXISTING	--	20 A	1	7	0 VA			0 VA			8	1	20 A	--	EXISTING
EXISTING	--	20 A	1	9		0 VA			0 VA		10	1	20 A	--	EXISTING
EXISTING	--	20 A	1	11			0 VA			0 VA	12	1	20 A	--	EXISTING
EXISTING	--	20 A	1	13	0 VA			0 VA			14	1	20 A	--	EXISTING
EXISTING	--	20 A	1	15		0 VA			0 VA		16	1	20 A	--	EXISTING
EXISTING	--	20 A	1	17			0 VA			0 VA	18	1	20 A	--	EXISTING
EXISTING	--	20 A	1	19	0 VA			0 VA			20	1	20 A	--	EXISTING
EXISTING	--	20 A	1	21		0 VA			0 VA		22	1	20 A	--	EXISTING
EXISTING	--	20 A	1	23			0 VA			0 VA	24	1	20 A	--	EXISTING
EXISTING	--	20 A	1	25	0 VA			0 VA			26	1	20 A	--	EXISTING
EXISTING	--	20 A	1	27		0 VA			0 VA		28	1	20 A	--	EXISTING
EXISTING	--	20 A	1	29			0 VA			0 VA	30	1	20 A	--	EXISTING
EXISTING	--	20 A	1	31	0 VA			0 VA			32	1	20 A	--	EXISTING
EXISTING	--	20 A	1	33		0 VA			0 VA		34	1	20 A	--	EXISTING
EXISTING	--	20 A	1	35			0 VA			0 VA	36	1	20 A	--	SPARE
AC A107 (1), AC A107 (2)	HACR	15 A	2	37	42 VA			0 VA			38	1	20 A	--	SPARE
				39		42 VA			0 VA		40	1	20 A	--	SPARE
SPARE	--	20 A	1	41			0 VA			0 VA	42	1	20 A	--	SPARE

Connected Totals: A EXISTING; B EXISTING; C EXISTING
Total: EXISTING
Amps EXISTING

(All Phases to be balanced to within 7% Actual Load Totals)

Breaker Option
AS - Powerlink AS Breaker
LO - Handle Lock-off Device
ST - Shunt Trip Type
AUX - Auxillary Contacts
PA - Handle Padlock Attchment
GFCI - Ground Fault Circuit Interrupter
HACR - Heating, A/C & Refrigeration
SF - Subfeed
TC - Time Clock Control

H2M architects + engineers
538 Broad Hollow Road, 4th Floor East
Melville, NY 11747
631.756.8000 • www.h2m.com
Land Surveying Certificate of Authorization No.: 0018178
Engineering Certificate of Authorization No.: 0018438

CONSULTANTS:

MARK	DATE	DESCRIPTION

ANTHONY WOONGJIN KIM, P.E.
NY PROFESSIONAL ENGINEER Lic. No. 092583
06/30/2027 Exp. Date

"ALTERATION OF THIS DOCUMENT EXCEPT BY A LICENSED PROFESSIONAL IS ILLEGAL"

DESIGNED BY:	DRAWN BY:	CHECKED BY:	REVIEWED BY:
LL	LL	LK	

PROJECT No:	DATE:	SCALE:
WPSD2203	FEBRUARY 2025	AS SHOWN

CLIENT
WHITE PLAINS CITY SCHOOL DISTRICT

HIGH SCHOOL ADDITION

66-22-00-01-0-016-030

CONTRACT
CONTRACT E
ELECTRICAL CONSTRUCTION

STATUS
FINAL BID DOCUMENT

SHEET TITLE
ELECTRICAL SCHEDULES
(SHEET 1 OF 2)

DRAWING No.
E 601.00

C:\Users\mvoltz\Documents\WPSD2203_Central21_M_mvoltz25ZVF.rvt
3/21/2025 3:28:04 PM

Name

Panelboard: CA1 | Voltage: 120/208V | Phase: 3 | Wire 4 | A.I.C. Rating: 22,000
Manufacturer: EATON | Mains: 400A MCB | Mains Rating: 400 A
Panel Type: PRL2X | Mounting: SURFACE | Options: | Notes: LOCATED IN DRY ST. I006B (NOTE 1)
NEMA Type Enclosure 1

Load Description	Breaker Option	Trip	Poles	Circ No.	A	B	C	A	B	C	Circ No.	Poles	Trip	Breaker Option	Load Description
GAS RANGE RECEPTACLE	ST	20 A	1	1	48 VA			48 VA			2	1	20 A	ST	GAS RANGE RECEPTACLE
SPACE	--	--	1	3		--			--		4	1	--	--	SPACE
CULINARY I006 CT CONV. RECEPT.		20 A	1	5			180 VA			488 VA	6	1	20 A		CULINARY I006 CONV. RECEPT.
ROOFTOP CONV. RECEPT.		20 A	1	7	180 VA			540 VA			8	1	20 A		CULINARY I006 CT CONV. RECEPT.
FRIDGE RECEPTACLE	GFCI	20 A	1	9		672 VA			1836 VA		10	1	20 A		COLD STORE. FREEZER RECEPT.
CULINARY I006 CONV. RECEPT.		20 A	1	11			1080 VA			672 VA	12	1	20 A	GFCI	FRIDGE RECEPT.
GAS RANGE RECEPTACLE	ST	20 A	1	13	180 VA			1440 VA			14	1	20 A		DESK FLOOR RECEPT.
SPACE	--	--	1	15		--			1800 VA		16				
MUA-1 DCV SIGNAI		15 A	1	17			180 VA			1800 VA	18	3	20 A	HACR	KEF-1
COLD STOR.. COOLER RECEPT.		20 A	1	19	828 VA			1800 VA			20				
WALK-IN LED FIXTURE		20 A	1	21		100 VA			1000 VA		22	1	20 A		CULINARY ARTS I004 DOOR CONT.
DESK COUNTERTOP RECEPT.		20 A	1	23			180 VA			0 VA	24	1	20 A	--	SPARE
WALK-IN LED FIXTURE		20 A	1	25	100 VA			0 VA			26	1	20 A	--	SPARE
				27		1896 VA			0 VA		28	1	20 A	--	SPARE
KEF-2	HACR	20 A	3	29			1896 VA			0 VA	30	1	20 A	--	SPARE
				31	1896 VA			0 VA			32	1	20 A	--	SPARE
SPARE	--	20 A	1	33		0 VA			0 VA		34	1	20 A	--	SPARE
SPARE	--	20 A	1	35			0 VA			0 VA	36	1	20 A	--	SPARE
SPARE	--	20 A	1	37	0 VA			0 VA			38	1	20 A	--	SPARE
SPARE	--	20 A	1	39		0 VA			0 VA		40	1	20 A	--	SPARE
SPARE	--	20 A	1	41			0 VA			0 VA	42	1	20 A	--	SPARE
SPARE	--	20 A	1	43	0 VA			0 VA			44	1	20 A	--	SPARE
SPARE	--	20 A	1	45		0 VA			0 VA		46	1	20 A	--	SPARE
SPARE	--	20 A	1	47			0 VA			0 VA	48	1	20 A	--	SPARE
SPARE	--	20 A	1	49	0 VA			0 VA			50	1	20 A	--	SPARE
SPARE	--	20 A	1	51		0 VA			0 VA		52	1	20 A	--	SPARE
SPARE	--	20 A	1	53			0 VA			0 VA	54	1	20 A	--	SPARE

Connected Totals: A 7.1 kVA; B 7.3 kVA; C 6.5 kVA
Total: 20.8 kVA
Amps: 58 A

(All Phases to be balanced to within 7% Actual Load Totals)

Breaker Option
AS - Powerlink AS Breaker
LO - Handle Lock-off Device
ST - Shunt Trip Type
AUX - Auxillary Contacts
PA - Handle Padlock Attchment
GFCI - Ground Fault Circuit Interrupter
HACR - Heating, A/C & Refrigeration
SF - Subfeed
TC - Time Clock Control

Name

Panelboard: LS1 | Voltage: 120/208V | Phase: 3 | Wire 4 | A.I.C. Rating: 22,000
Manufacturer: EATON | Mains: 150A MCB | Mains Rating: 150 A
Panel Type: PRL1X | Mounting: SURFACE | Options: | Notes:
NEMA Type Enclosure 1

Load Description	Breaker Option	Trip	Poles	Circ No.	A	B	C	A	B	C	Circ No.	Poles	Trip	Breaker Option	Load Description
LIFE SKILLS CONV. RECEPT.		20 A	1	1	720 VA			900 VA			2	1	20 A		LIFE SKILLS RECEPT.
LIFE SKILLS COUNTERTOP...		20 A	1	3		1080 VA			1080 VA		4	1	20 A		TRAINING BEDROOM RECEPT.
LIFE SKILLS RECEPT.		20 A	1	5			900 VA			360 VA	6	1	20 A		LIFE SKILLS ISLAND RECEPT.
LIFE SKILLS REFRIGERATOR	GFCI	20 A	1	7	1000 VA			1440 VA			8	1	20 A	GFCI	LIFE SKILLS DISHWASHER
LIFE SKILLS BASKET WASHER	GFCI	20 A	1	9		1200 VA			1320 VA		10	1	20 A	GFCI	LIFE SKILLS FRONT LOAD...
LIFE SKILLS FRONT LOAD DRYER	GFCI	30 A	2	11			2150 VA			2200 VA	12	2	30 A	GFCI	LIFE SKILLS ALLOY DRUM ELECTRIC DRYER
				13	2150 VA			2200 VA			14				
LIFE SKILLS ELECTRIC RANGE		40 A	2	15		3640 VA			0 VA		16	1	20 A	--	SPARE
				17			3640 VA			0 VA	18	1	20 A	--	SPARE
SPARE	--	20 A	1	19	0 VA			0 VA			20	1	20 A	--	SPARE
SPARE	--	20 A	1	21		0 VA			0 VA		22	1	20 A	--	SPARE
SPARE	--	20 A	1	23			0 VA			0 VA	24	1	20 A	--	SPARE
SPARE	--	20 A	1	25	0 VA			0 VA			26	1	20 A	--	SPARE
SPARE	--	20 A	1	27		0 VA			0 VA		28	1	20 A	--	SPARE
SPARE	--	20 A	1	29			0 VA			0 VA	30	1	20 A	--	SPARE

Connected Totals: A 8.4 kVA; B 8.3 kVA; C 9.3 kVA
Total: 26.0 kVA
Amps: 72 A

(All Phases to be balanced to within 7% Actual Load Totals)

Breaker Option
AS - Powerlink AS Breaker
LO - Handle Lock-off Device
ST - Shunt Trip Type
AUX - Auxillary Contacts
PA - Handle Padlock Attchment
GFCI - Ground Fault Circuit Interrupter
HACR - Heating, A/C & Refrigeration
SF - Subfeed
TC - Time Clock Control

Name

Panelboard: DA | Voltage: 120/208V | Phase: 3 | Wire 4 | A.I.C. Rating: 22,000
Manufacturer: EATON | Mains: 150A MCB | Mains Rating: 225 A
Panel Type: PRL1X | Mounting: SURFACE | Options: | Notes:
NEMA Type Enclosure 1

Load Description	Breaker Option	Trip	Poles	Circ No.	A	B	C	A	B	C	Circ No.	Poles	Trip	Breaker Option	Load Description
DIGITAL RM I114 DESK RECEPT.		20 A	1	1	1080 VA			360 VA			2	1	20 A		DIGITAL RM I114 FLOOR RECEPT.
DIGITAL RM I114 FLOOR RECEPT.		20 A	1	3		720 VA			720 VA		4	1	20 A		DIGITAL RM I114 FLOOR RECEPT.
DIGITAL RM I114 DESK RECEPT.		20 A	1	5			1080 VA			1080 VA	6	1	20 A		DIGITAL RM I114 DESK RECEPT.
DIGITAL RM I114 DESK RECEPT.		20 A	1	7	1080 VA			360 VA			8	1	20 A		PHOTOG. RM I116 FLOOR RECEPT.
PHOTOG. RM I116 FLOOR RECEPT.		20 A	1	9		720 VA			720 VA		10	1	20 A		PHOTOG. RM I116 FLOOR RECEPT.
PHOTOG. RM I116 RECEPT.		20 A	1	11			720 VA			720 VA	12	1	20 A		PHOTOG. RM I116 DESK RECEPT.
PHOTOG. RM I116 DESK RECEPT.		20 A	1	13	1080 VA			370 VA			14	1	20 A	GFCI	CORR. IC103 WATER FOUNTAIN
RM I109 FLOOR RECEPT.		20 A	1	15		1080 VA			1080 VA		16	1	20 A		RM I109 FLOOR RECEPT.
DIGITAL RM I114 BQ RECEPT.		20 A	1	17			488 VA			900 VA	18	1	20 A		PHOTOG. RM I116 RECEPT.
ACI110, ACI112	HACR	15 A	2	19	582 VA			666 VA			20	2	15 A	HACR	ACI106 (1),(2), ACI114 (1),(2),(3),(4), ACI116 (1),(2)
				21		582 VA			666 VA		22				
DIGITAL RM I114 RECEPT.		20 A	1	23			360 VA			360 VA	24	1	20 A		DIGITAL RM I114 DESK RECEPT.
DARK RM I116A RECEPT.		20 A	1	25	900 VA			180 VA			26	1	20 A		PHOTOG. RM I116 BQ RECEPT.
DARK RM I116A RECEPT.		20 A	1	27		900 VA			900 VA		28	1	20 A		DARK RM I116A RECEPT.
DARK RM I116A RECEPT.		20 A	1	29			900 VA			360 VA	30	1	20 A		DARK RM I116A RECEPT.
BC-8, BC-9, BC-10	HACR	15 A	2	31	83 VA			1450 VA			32	1	20 A	GFCI	TOILET RM I1013C HAND DRYER
				33		83 VA			1450 VA		34	1	20 A	GFCI	TOILET RM I1013D HAND DRYER
TOILET RM I101C,D,G FLUSH VALV.	GFCI	20 A	1	35			100 VA			540 VA	36	1	20 A		TOILET RM I101C,D,G LAV. FAUCET
RM I105 FRIDGE RECEPT.	GFCI	20 A	1	37	180 VA			1080 VA			38	1	20 A		RM I105 RECEPT.
OFFICE RM I105B RECEPT.		20 A	1	39		1080 VA			360 VA		40	1	20 A		RM I1013G, I1013E RECEPT.
FIRE SMOKE DAMPER		15 A	1	41			30 VA			1080 VA	42	1	20 A		RM I109 FLOOR RECEPT.
ACI104, ACI109, ACI101, ACI116A(1), ACI116A(2), ACI105, ACI105B	HACR	15 A	2	43	83 VA			0 VA			44	1	20 A	--	SPARE
				45		83 VA			0 VA		46	1	20 A	--	SPARE
AC BRIDGE, ACIC103, ACI109 (2), ACIC105	HACR	15 A	2	47			645 VA			0 VA	48	1	20 A	--	SPARE
				49	645 VA			0 VA			50	1	20 A	--	SPARE
ACI108 (1), ACI108 (2)	HACR	15 A	2	51		260 VA			0 VA		52	1	20 A	--	SPARE
				53			260 VA			0 VA	54	1	20 A	--	SPARE

Connected Totals: A 10.2 kVA; B 11.4 kVA; C 9.6 kVA
Total: 31.2 kVA
Amps: 87 A

(All Phases to be balanced to within 7% Actual Load Totals)

Breaker Option
AS - Powerlink AS Breaker
LO - Handle Lock-off Device
ST - Shunt Trip Type
AUX - Auxillary Contacts
PA - Handle Padlock Attchment
GFCI - Ground Fault Circuit Interrupter
HACR - Heating, A/C & Refrigeration
SF - Subfeed
TC - Time Clock Control

Name

Panelboard: HP1 | Voltage: 277/480V | Phase: 3 | Wire | A.I.C. Rating: 65,000
Manufacturer: EATON | Mains: 100A MCB | Mains Rating: 100 A
Panel Type: PRL1X | Mounting: SURFACE | Options: | Notes:
NEMA Type Enclosure NEMA 1

Load Description	Breaker Option	Trip	Poles	Circ No.	A	B	C	A	B	C	Circ No.	Poles	Trip	Breaker Option	Load Description
GROUND FLOOR LIGHTING		20 A	1	1	3250 VA			1722 VA			2	1	20 A		GROUND FLOOR LIGHTING
				3		8116 VA			338 VA		4	1	20 A		EXTERIOR WALLPACK LIGHTING
ELEVATOR		40 A	3	5			8116 VA			312 VA	6	1	20 A		EXTERIOR WALLPACK LIGHTING
				7	8116 VA			0 VA			8	1	20 A	--	SPARE
EXTERIOR POLE LIGHTING		20 A	1	9		120 VA			0 VA		10	1	20 A	--	SPARE
EXTERIOR BOLLARD LIGHTING		20 A	1	11			182 VA			0 VA	12	1	20 A	--	SPARE
SPARE	--	20 A	1	13	0 VA			0 VA			14	1	20 A	--	SPARE
SPARE	--	20 A	1	15		0 VA			0 VA		16	1	20 A	--	SPARE
SPARE	--	20 A	1	17			0 VA			0 VA	18	1	20 A	--	SPARE
SPARE	--	20 A	1	19	0 VA			0 VA			20	1	20 A	--	SPARE
SPARE	--	20 A	1	21		0 VA			0 VA		22	1	20 A	--	SPARE
SPARE	--	20 A	1	23			0 VA			0 VA	24	1	20 A	--	SPARE
SPARE	--	20 A	1	25	0 VA			0 VA			26	1	20 A	--	SPARE
SPARE	--	20 A	1	27		0 VA			0 VA		28	1	20 A	--	SPARE
SPARE	--	20 A	1	29			0 VA			0 VA	30	1	20 A	--	SPARE

Connected Totals: A 13.1 kVA; B 8.6 kVA; C 8.6 kVA
Total: 30.3 kVA
Amps: 36 A

(All Phases to be balanced to within 7% Actual Load Totals)

Breaker Option
AS - Powerlink AS Breaker
LO - Handle Lock-off Device
ST - Shunt Trip Type
AUX - Auxillary Contacts
PA - Handle Padlock Attchment
GFCI - Ground Fault Circuit Interrupter
HACR - Heating, A/C & Refrigeration
SF - Subfeed
TC - Time Clock Control

Name

Panelboard: HP2 | Voltage: 277/480V | Phase: 3 | Wire | A.I.C. Rating: 65,000
Manufacturer: EATON | Mains: 225A MCB | Mains Rating: 225 A
Panel Type: PRL2X | Mounting: SURFACE | Options: | Notes:
NEMA Type Enclosure NEMA 1

Load Description	Breaker Option	Trip	Poles	Circ No.	A	B	C	A	B	C	Circ No.	Poles	Trip	Breaker Option	Load Description
GROUND FLOOR LIGHTING		20 A	1	1	2602 VA			3759 VA			2	1	20 A		GROUND FLOOR LIGHTING
PRESENTATION SPACE 'ILCP'		20 A	1	3		500 VA			18767 VA		4				
				5			4184 VA			18767 VA	6	3	70 A		MUA-2 COIL
MUA-2 FAN MOTOR		20 A	3	7	4184 VA			18767 VA			8				
				9		4184 VA			2910 VA		10				
				11			2910 VA			2910 VA	12	3	15 A	HACR	MUA-1 CONDENSER 1
MUA-1 CONDENSER 2	HACR	15 A	3	13	2910 VA			2910 VA			14				
				15		2910 VA			2910 VA		16				
				17			3471 VA			2910 VA	18	3	15 A	HACR	MUA-1 CONDENSER 3
MUA-1 FAN MOTOR	HACR	25 A	3	19	3471 VA			2910 VA			20				
				21		3471 VA			5542 VA		22				
SPARE	--	20 A	1	23			0 VA			5542 VA	24	3	30 A		DH-6000 DISHWASHER
SPARE	--	20 A	1	25	0 VA			5542 VA			26				
SPARE	--	20 A	1	27		0 VA			0 VA		28	1	20 A	--	SPARE
SPARE	--	20 A	1	29			0 VA			0 VA	30	1	20 A	--	SPARE
SPARE	--	20 A	1	31	0 VA			0 VA			32	1	20 A	--	SPARE
SPARE	--	20 A	1	33		0 VA			0 VA		34	1	20 A	--	SPARE
SPARE	--	20 A	1	35			0 VA			0 VA	36	1	20 A	--	SPARE
SPARE	--	20 A	1	37	0 VA			0 VA			38	1	20 A	--	SPARE
SPARE	--	20 A	1	39		0 VA			0 VA		40	1	20 A	--	SPARE
SPARE	--	20 A	1	41			0 VA			0 VA	42	1	20 A	--	SPARE

Connected Totals: A 47.1 kVA; B 41.2 kVA; C 40.7 kVA
Total: 128.9 kVA
Amps 155 A

(All Phases to be balanced to within 7% Actual Load Totals)

Breaker Option
AS - Powerlink AS Breaker
LO - Handle Lock-off Device
ST - Shunt Trip Type
AUX - Auxillary Contacts
PA - Handle Padlock Attchment
GFCI - Ground Fault Circuit Interrupter
HACR - Heating, A/C & Refrigeration
SF - Subfeed
TC - Time Clock Control

Name

Panelboard: HP3 | Voltage: 277/480V | Phase: 3 | Wire | A.I.C. Rating: 65,000
Manufacturer: EATON | Mains: 225A MCB | Mains Rating: 225 A
Panel Type: PRL2X | Mounting: SURFACE | Options: | Notes:
NEMA Type Enclosure NEMA 1

Load Description	Breaker Option	Trip	Poles	Circ No.	A	B	C	A	B	C	Circ No.	Poles	Trip	Breaker Option	Load Description
103,105,106A,109,114,116,C102 LTG		20 A	1	1	3795 VA			3964 VA			2	1	20 A		CORRIDOR C104 LTG
				3		5903 VA			5903 VA		4				
CU-5A	HACR	25 A	3	5			5903 VA			5903 VA	6	3	25 A	HACR	CU-5B
				7	5903 VA			5903 VA			8				
				9		4600 VA			5903 VA		10				
CU-4B	HACR	20 A	3	11			4600 VA			5903 VA	12	3	25 A	HACR	CU-4A
				13	4600 VA			5903 VA			14				
				15		8286 VA			5903 VA		16				
CU-3	HACR	35 A	3	17			8286 VA			5903 VA	18	3	25 A	HACR	CU-1
				19	8286 VA			5903 VA			20				
				21		4356 VA			2401 VA		22	1	20 A		ROOM 106,110,110A LTG
CU-2	HACR	20 A	3	23			4356 VA			4312 VA	24	1	20 A		ROOM 100,102,102A,104,117 LTG
				25	4356 VA			2079 VA			26	1	20 A		ROOM 112,108,108B LTG
SPARE	--	20 A	1	27		0 VA			0 VA		28	1	20 A	--	SPARE
SPARE	--	20 A	1	29			0 VA			0 VA	30	1	20 A	--	SPARE
SPARE	--	20 A	1	31	0 VA			0 VA			32	1	20 A	--	SPARE
SPARE	--	20 A	1	33		0 VA			0 VA		34	1	20 A	--	SPARE
SPARE	--	20 A	1	35			0 VA			0 VA	36	1	20 A	--	SPARE
SPARE	--	20 A	1	37	0 VA			0 VA			38	1	20 A	--	SPARE
SPARE	--	20 A	1	39		0 VA			0 VA		40	1	20 A	--	SPARE
SPARE	--	20 A	1	41			0 VA			0 VA	42	1	20 A	--	SPARE

Connected Totals: A 50.7 kVA; B 43.3 kVA; C 45.2 kVA
Total: 139.1 kVA
Amps 167 A

(All Phases to be balanced to within 7% Actual Load Totals)

Breaker Option
AS - Powerlink AS Breaker
LO - Handle Lock-off Device
ST - Shunt Trip Type
AUX - Auxillary Contacts
PA - Handle Padlock Attchment
GFCI - Ground Fault Circuit Interrupter
HACR - Heating, A/C & Refrigeration
SF - Subfeed
TC - Time Clock Control

Name

Panelboard: ITG | Voltage: 120/208V | Phase: 3 | Wire 4 | A.I.C. Rating: 22,000
Manufacturer: EATON | Mains: 60A MCB | Mains Rating: 60 A
Panel Type: PRL1X | Mounting: SURFACE | Options: | Notes: EM PANEL
NEMA Type Enclosure 1

Load Description	Breaker Option	Trip	Poles	Circ No.	A	B	C	A	B	C	Circ No.	Poles	Trip	Breaker Option	Load Description
Server Rack		20 A	1	1	360 VA			360 VA			2	1	20 A		Server Rack
SP. ED. RM I021 ONT RECEPT.		20 A	1	3		180 VA			180 VA		4	1	20 A		SP. ED. RM I020 ONT RECEPT.
SP. ED. RM I019 ONT RECEPT.		20 A	1	5			180 VA			180 VA	6	1	20 A		CLASSROOM I013
DRY STORAGE I006B ONT RECEPT.		20 A	1	7	180 VA			180 VA			8	1	20 A		MECH. RM I001B ONT RECEPT.
CLASSROOM I014 ONT RECEPT.		20 A	1	9		180 VA			180 VA		10	1	20 A		CLASSROOM I015 ONT RECEPT.
SECURITY OFF. I011 ONT RECEPT.		20 A	1	11			180 VA			180 VA	12	1	20 A		SECURITY OFFI. I008C ONT...
STORAGE RM I008B ONT RECEPT.		20 A	1	13	180 VA			180 VA			14	1	20 A		STUDY HALL I009 ONT RECEPT.
CONF. RM I012 ONT RECEPT.		20 A	1	15		180 VA			180 VA		16	1	20 A		UNION OFFICE I016A ONT RECEPT.
ELECTRICAL RM I001A ONT...		20 A	1	17			180 VA			180 VA	18	1	20 A		UNION OFFICE I016B ONT RECEPT.
LIFE SKILLS RM I017 ONT RECEPT.		20 A	1	19	180 VA			180 VA			20	1	20 A		ART GALLERY RM I007 ONT...
CLOSET I013N ONT RECEPT.		20 A	1	21		180 VA			0 VA		22	1	20 A	--	SPARE
CLOSET I013N ONT RECEPT.		20 A	1	23			180 VA			0 VA	24	1	20 A	--	SPARE
BASEMENT IB 001 ONT RECEPT.		20 A	1	25	180 VA			0 VA			26	1	20 A	--	SPARE
SPARE	--	20 A	1	27		0 VA			0 VA		28	1	20 A	--	SPARE
SPARE	--	20 A	1	29			0 VA			0 VA	30	1	20 A	--	SPARE

Connected Totals: A 2.0 kVA; B 1.3 kVA; C 1.3 kVA
Total: 4.5 kVA
Amps: 12 A

(All Phases to be balanced to within 7% Actual Load Totals)

Breaker Option
AS - Powerlink AS Breaker
LO - Handle Lock-off Device
ST - Shunt Trip Type
AUX - Auxillary Contacts
PA - Handle Padlock Attchment
GFCI - Ground Fault Circuit Interrupter
HACR - Heating, A/C & Refrigeration
SF - Subfeed
TC - Time Clock Control

Name

Panelboard: IT1 | Voltage: 120/208V | Phase: 3 | Wire 4 | A.I.C. Rating: 22,000
Manufacturer: EATON | Mains: 60A MCB | Mains Rating: 60 A
Panel Type: PRL1X | Mounting: SURFACE | Options: - | Notes: EM PANEL
NEMA Type Enclosure 1

Load Description	Breaker Option	Trip	Poles	Circ No.	A	B	C	A	B	C	Circ No.	Poles	Trip	Breaker Option	Load Description
ART RM I110 ONT RECEPT.		20 A	1	1	180 VA			180 VA			2	1	20 A		ART RM I112 ONT RECEPT.
ART RM I108 ONT RECEPT.		20 A	1	3		180 VA			180 VA		4	1	20 A		ART RM I106 ONT RECEPT.
DIGI. ARTS RM I114 ONT RECEPT.		20 A	1	5			180 VA			180 VA	6	1	20 A		DIGI. ARTS RM I114 ONT RECEPT.
PHOTOGRAPHY RM. I116 ONT...		20 A	1	7	180 VA			180 VA			8	1	20 A		STORAGE I116B ONT RECEPT.
RM I102 ONT RECEPT.		20 A	1	9		180 VA			180 VA		10	1	20 A		CEREMICS RM I104 ONT RECEPT.
SP ED. RM I117 ONT RECEPT.		20 A	1	11			180 VA			180 VA	12	1	20 A		SP ED. RM I100 ONT RECEPT.
ST. RM I105A ONT RECEPT.		20 A	1	13	180 VA			180 VA			14	1	20 A		ELEC. CLOSET I105D ONT RECEPT.
ELEC. CLOSET I105D ONT RECEPT.		20 A	1	15		180 VA			0 VA		16	1	20 A	--	SPARE
OFFICE RM I100 ONT RECEPT.		20 A	1	17			180 VA			0 VA	18	1	20 A	--	SPARE
SPARE	--	20 A	1	19	0 VA			0 VA			20	1	20 A	--	SPARE
SPARE	--	20 A	1	21		0 VA			0 VA		22	1	20 A	--	SPARE
SPARE	--	20 A	1	23			0 VA			0 VA	24	1	20 A	--	SPARE
SPARE	--	20 A	1	25	0 VA			0 VA			26	1	20 A	--	SPARE
SPARE	--	20 A	1	27		0 VA			0 VA		28	1	20 A	--	SPARE
SPARE	--	20 A	1	29			0 VA			0 VA	30	1	20 A	--	SPARE

Connected Totals: A 1.1 kVA; B 0.9 kVA; C 0.9 kVA
Total: 2.9 kVA
Amps: 8 A

(All Phases to be balanced to within 7% Actual Load Totals)

Breaker Option
AS - Powerlink AS Breaker
LO - Handle Lock-off Device
ST - Shunt Trip Type
AUX - Auxillary Contacts
PA - Handle Padlock Attchment
GFCI - Ground Fault Circuit Interrupter
HACR - Heating, A/C & Refrigeration
SF - Subfeed
TC - Time Clock Control

DISCONNECT SWITCH SCHEDULE

DISCONNECT SWITCH IDENTIFICATION	TYPE	ENCLOSURE	VOLTS	POLES	FRAME SIZE AMPS	FUSE RATING	DETAIL
DS1	NON-FUSED	NEMA 3R	600	3	100	-	.
DS2	NON-FUSED	NEMA 3R	600	3	60	-	.
DS3	NON-FUSED	NEMA 3R	600	3	30	-	.
DS4	NON-FUSED	NEMA 3R	600	3	400	-	.
DS5	NON-FUSED	NEMA 1	600	3	100	-	.
DS6 (NOTES 3,4)	FUSED	NEMA 1	600	3	60	40 (NOTE 2)	5 / E 501
DS7 (NOTE 3)	FUSED	NEMA 1	120	1	30	15 (NOTE 2)	.
DS8	FUSED	NEMA 1	600	3	30	15	.
DS9	NON-FUSED	NEMA 1	600	3	30	-	.
DS10	NON-FUSED	NEMA 1	240	3	60	-	.

TRANSFORMER SCHEDULE

TRANSFORMER IDENTIFICATION	SIZE	PRIMARY VOLTAGE / PHASE	SECONDARY VOLTAGE / PHASE / WIRE	TYPE	ENCLOSURE	MOUNTING LOCATION	DETAIL
T1	500KVA	480V / 3Ø	120/208V / 3Ø / 4W	DRY	NEMA 1	CONCRETE PAD	2 / E 500

PANEL SCHEDULE KEY NOTES:

1. CONTRACTOR SHALL PROVIDE AND INSTALL ONE (1) NEW 100A/3ϕ ASCO 920 CONTACTOR IN PANEL "CA1" TO CONTROL UNDER HOOD POWER. NEW 100A/3P ASCO 920 CONTACTOR SHALL CONTROL THE BUS FOR THREE (3) 20A/1P CIRCUIT BREAKERS TO FEED GAS RANGES IN CULINARY ARTS ROOM.
2. CONTRACTOR SHALL COORDINATE EXACT FUSE SIZE WITH ELEVATOR INSTALLER.
3. DISCONNECT SWTICH SHALL BE CAPABLE OF BEING LOCKED IN THE OPEN POSITION PER NEC REQUIRMENTS.
4. CONTRACTOR SHALL PROVIDE AND INSTALL COOPER BUSSMAN DISCONNECT SWITCH OR APPROVED EQUAL.

C:\Users\mvoltz\Documents\WPSD2203_Central21_M_mvoltz25ZVF.rvt
3/21/2025 3:28:15 PM

H2M architects + engineers
538 Broad Hollow Road, 4th Floor East
Melville, NY 11747
631.756.8000 • www.h2m.com
Land Surveying Certificate of Authorization No.: 0018178
Engineering Certificate of Authorization No.: 0018438

CONSULTANTS:

MARK	DATE	DESCRIPTION

STATE OF NEW YORK · ANTHONY WOONGJIN KIM · LICENSED PROFESSIONAL ENGINEER · 092583
06/30/2027 Exp. Date
ANTHONY WOONGJIN KIM, P.E.
NY PROFESSIONAL ENGINEER Lic. No. 092583
"ALTERATION OF THIS DOCUMENT EXCEPT BY A LICENSED PROFESSIONAL IS ILLEGAL"

DESIGNED BY:	DRAWN BY:	CHECKED BY:	REVIEWED BY:
LL	LL	LK	

PROJECT No:	DATE:	SCALE:
WPSD2203	FEBRUARY 2025	AS SHOWN

CLIENT
WHITE PLAINS CITY SCHOOL DISTRICT

HIGH SCHOOL ADDITION

66-22-00-01-0-016-030

CONTRACT
CONTRACT E
ELECTRICAL CONSTRUCTION

STATUS
FINAL BID DOCUMENT

SHEET TITLE
ELECTRICAL SCHEDULES
(SHEET 2 OF 2)

DRAWING No.
E 602.00

FEEDER SCHEDULE (COPPER)

FEEDER	CONDUCTOR AND CONDUITS FEEDER SCHEDULE
A	4 SETS OF 6-500 MCM + 250 MCM IN (4) 4" SCHEDULE 80 PVC E.C. (ISOLATED PHASE CONSTRUCTION) (BELOW GRADE)
B	MICRO Z, LOW INDUCTANCE CABLE IN 1" E.C.
C	4 #3 AWG + #8 AWG GND IN 1-1/4" E.C.
D	4 #4/0 AWG + #4 AWG GND IN 2-1/2" E.C.
E	2 SETS OF 3-350 MCM + #1/0 AWG GND IN (2) 4" E.C.
F	4 SETS OF 4-350 MCM + #3/0 AWG GND IN (4) 3" E.C.
G	4 #1/0 AWG + # 6 AWG GND IN 2" E.C.
H	4 #3 AWG + #8 AWG GND IN 1-1/4" E.C.
I	3 #4 AWG + #8 AWG GND IN 1" E.C.
J	3 #3 AWG + #8 AWG GND IN 1-1/4" E.C.
K	3 #12 AWG + #12 AWG GND IN 3/4" E.C.
L	4 #1/0 AWG + #3 AWG GND IN 2" E.C.
M	2 SETS OF 4-300 MCM + #2 AWG GND IN (2) 3" E.C.
N	2 #10 AWG + #10 AWG GND IN 3/4" E.C.
O	NEW COPPER PRIMARY SERVICE CONDUCTORS IN 4" CON EDISON APPROVED HDPE E.C. (BELOW GRADE)
P	NEW GROUND FOR SEPERATELY DERIVED SYSTEM IN ACCORDANCE WITH NEC
Q	2 SETS OF 1 PAIR RISER SINGLE MODE FIBER OPTIC CABLES IN ARMORED JACKET IN (2) 1" E.C. (NOTE 3)
R	3 #4/0 AWG + #4 AWG GND IN 2-1/2" E.C.
S	3 #1/0 AWG + #6 AWG GND IN 2" E.C.
T	FIBER OPTIC CABLE (MULTI MODE 56/125 IN 1" E.C.
U	GROUNDING AS PER UTILITY REQUIREMENTS
V	#3/0 AWG GND TO UNDERGROUND METAL WATER MAIN AND #3/0 AWG GND TO 3/4" X 10' SOLID COPPER GROUND ROD AND #3/0 AWG GND TO 3/4" X 10' SOLID COPPER GROUND ROD VIA METAL FRAME OF BUILDING AND #3/0 AWG GND FROM METAL WATER MAIN PIPING SYSTEM TO METAL FRAME OF BUILDING.
W	EXISTING WIRE AND CONDUIT
X	METERING CONDUCTORS AND CONDUIT AS PER CON EDISON REQUIREMENTS IN 1-1/2" E.C.

SINGLE LINE DIRAGRAM NOTES:

1. CONTRACTOR SHALL PROVIDE AND INSTALL CIRCUIT BREAKER WITH ARC REDUCTION MAINTENANCE SWITCH AS REQUIRED BY NEC SECTION 240.87
2. CONTRACTOR SHALL PROVIDE AND INSTALL ALL FUSE LIMITER AS PER CON EDISON REQUIREMENTS.
3. CONTRACTOR SHALL COORDINATE EXACT TYPES AND QUANTITIES OF FIBER OPTIC CABLE WITH SCHOOL DISTRICT PRIOR TO ORDERING AND INSTALLING.

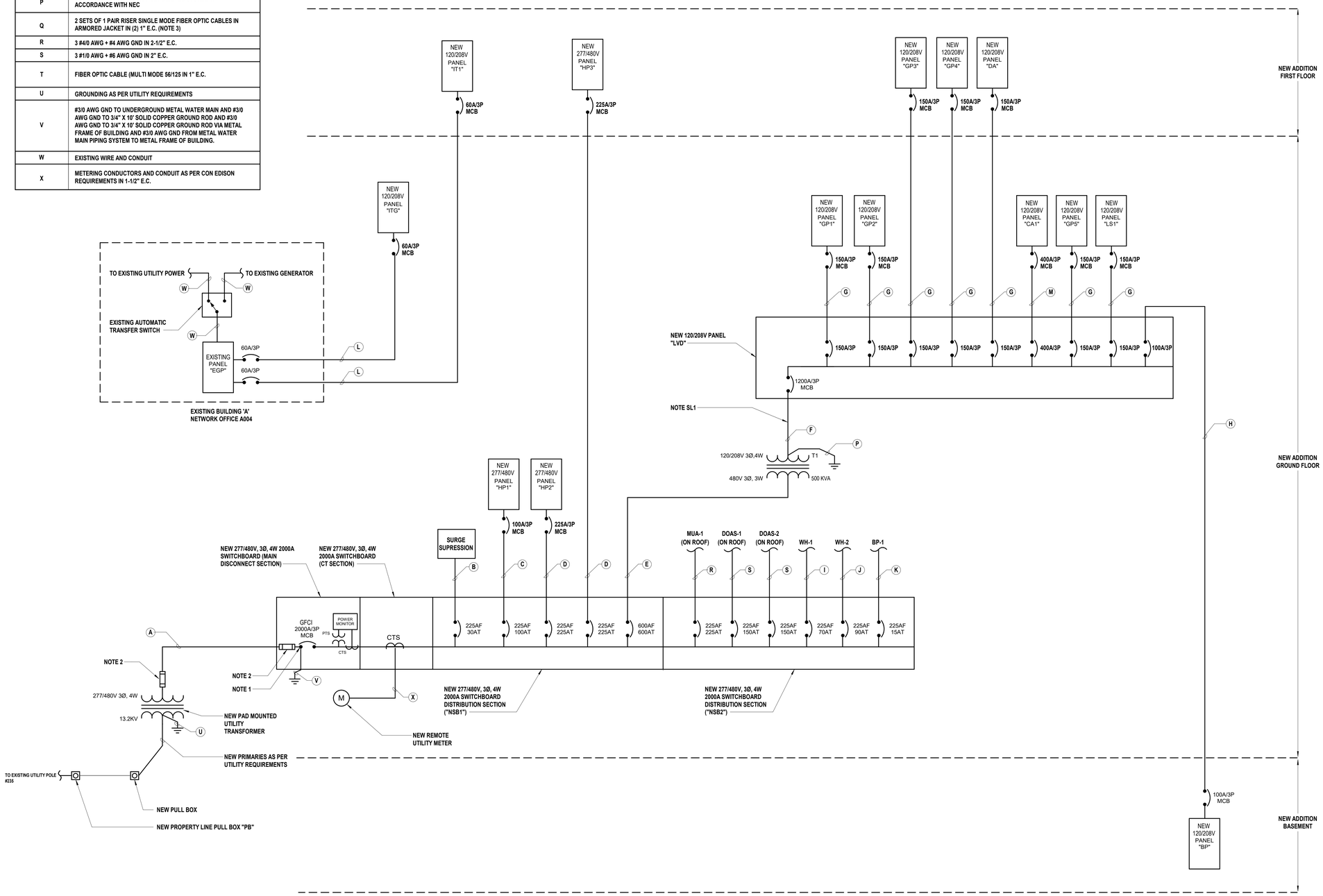

1 **Electrical Partial Single Line Diagram**
SCALE: 12" = 1'-0"

H2M architects + engineers
538 Broad Hollow Road, 4th Floor East
Melville, NY 11747
631.756.8000 • www.h2m.com
Land Surveying Certificate of Authorization No.: 0018178
Engineering Certificate of Authorization No.: 0018438

CONSULTANTS:

MARK	DATE	DESCRIPTION

STATE OF NEW YORK · ANTHONY WOONGJIN KIM · 096392 · PROFESSIONAL ENGINEER

ANTHONY WOONGJIN KIM, P.E. 06/30/2027 Exp. Date
NY PROFESSIONAL ENGINEER Lic. No. 096392
"IN TRANSMITTAL OF THIS DOCUMENT EXCEPT BY A LICENSED PROFESSIONAL IS ILLEGAL"

DESIGNED BY:	DRAWN BY:	CHECKED BY:	REVIEWED BY:
LL	LL	AWK	-
PROJECT No: WPSD2203	DATE: FEBRUARY 2025	SCALE: AS SHOWN	

CLIENT
WHITE PLAINS CITY SCHOOL DISTRICT

HIGH SCHOOL ADDITION

White Plains Public Schools · REAL LIFE LEARNING

66-22-00-01-0-016-030

CONTRACT
CONTRACT E
ELECTRICAL CONSTRUCTION

STATUS
FINAL BID DOCUMENT

SHEET TITLE
ELECTRICAL PARTIAL SINGLE LINE DIAGRAM

DRAWING No.
E 610.00

C:\Users\mvdal\Documents\WPSD2203_Central\21_M_mvdal2SZVF.rvt
3/21/2025 3:28:23 PM

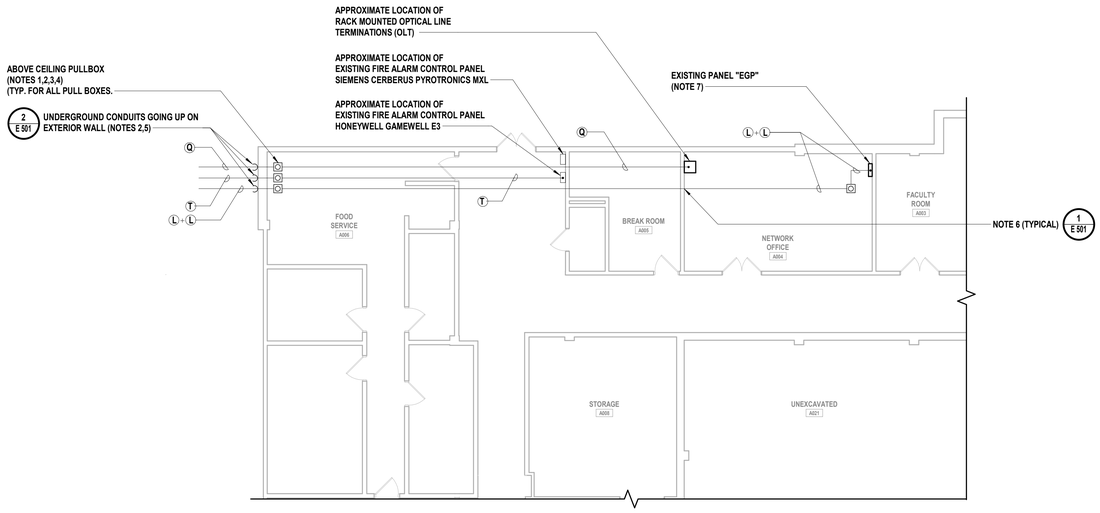

1 Electrical Ground Floor Power Plan

SCALE: 1/8" = 1'-0"

ELECTRICAL GENERAL NOTES

G1. CONDUIT RUNS THAT ARE SHOWN ARE DIAGRAMMATICAL AND SHOW POTENTIAL ROUTING OF CONDUITS. IT IS THE RESPONSIBILITY OF THE CONTRACTOR TO COORDINATE RUNS WITH ALL TRADES AND DISTRICT.

G2. ALL WIRING AND CONDUIT SHALL BE RUN CONCEALED IN WALLS AND ABOVE HUNG CEILING UNLESS OTHERWISE NOTED.

G3. FOR ALL WIRE AND CONDUIT WITH (#) DESIGNATION, REFER TO SHEET E610 FOR FEEDER SCHEDULE FOR ALL WIRE AND CONDUIT SIZES AND QUANTITIES.

ELECTRICAL KEY NOTES:

1. NEW PULLBOX. FLOOR PLAN SHOWS MINIMUM REQUIRED PULL BOXES. PROVIDE ADDITIONAL PULL BOXES AS REQUIRED BY NEC.
2. CONDUIT RUNS AND PULL BOXES THAT ARE SHOWN ARE DIAGRAMMATICAL AND FOR REFERENCE ONLY. ELECTRONIC AS-BUILT DRAWINGS, SHOWN CONDUIT RUNS AND CIRCUITING MUST BE GIVEN TO THE ARCHITECT, ENGINEER AND DISTRICT AT THE COMPLETION OF THE JOB.
3. CONTRACTOR SHALL PROVIDE AND INSTALL SEPARATE PULL BOXES FOR POWER AND FIRE ALARM CONDUITS. ONE (1) PULLBOX FOR POWER CONDUIT, AND ONE (1) PULL BOX FOR FIRE ALARM CONDUIT. SIZE SHALL BE ACCORDANCE WITH NEC. POWER, AND FIRE ALARM SHALL NOT BE RAN THROUGH THE SAME PULLBOX.
4. NO BLOCKS AND LB FITTINGS ARE ALLOWED ON CONDUIT USED FOR FIBER OPTIC CABLING. PULL BOXES SHALL BE PLACED EVERY 100FT. IN A STRAIGHT CONDUIT RUN. THE INSIDE RADIUS OF ANY BEND IN THE CONDUIT SHALL BE AT LEAST EIGHT (8) TIMES THE INTERNAL DIAMETER. ONLY APPROVED PULL LUBRICANTS ARE TO BE USED AT ANY TIME. REFER TO SHEET FA001 FOR WIRE INFORMATION.
5. CONTRACTOR SHALL STUB ALL CONDUITS INTO EXISTING BUILDING ABOVE GRADE. COORDINATE EXACT HEIGHT IN FIELD WITH ARCHITECT/ENGINEER. SEAL CONDUIT CONDUIT PENTRATIONS WITH NON-SHRINK GROUT. REFER TO SHEET ES101 & E104 FOR WIRE CONTINUATION.
6. CONTRACTOR SHALL COREDRILL WALL AS REQUIRED. INSTALL NON SHRINK GROUT/FIRESTOPPING SEALANT FOR ALL CONDUIT PENETRATIONS. RESTORE ALL FINISH TO MATCH EXISTING.
7. CONTRACTOR SHALL REMOVE, CLEAN AND TURN OVER SIX (6) 20A/1P SPARE CIRCUIT BREAKERS TO THE SCHOOL DISTRICT. CONTRACTOR SHALL PROVIDE AND INSTALL TWO (2) NEW 60A/3P CIRCUIT BREAKERS FOR NEW PANEL "ITG" AND "IT1". NEW CIRCUIT BREAKERS SHALL BE LISTED/LABELED FOR USE IN EXISTING PANEL. PROVIDE AND INSTALL MOUNTING HARDWARE AND ACCESSORIES AS REQUIRED. AMPERE INTERRUPTING CAPACITY (AIC) SHALL MATCH OR EXCEED EXISTING PANEL RATING. REFER TO SINGLE LINE DIAGRAM AND NEW ADDITION PLAN FOR ADDITIONAL INFORMATION.

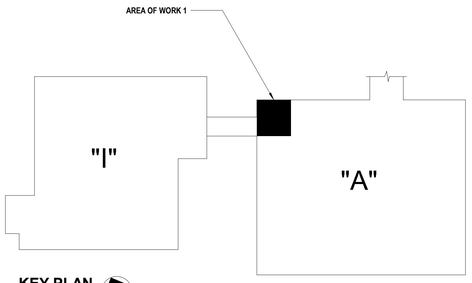

KEY PLAN

SCALE: NTS

H2M architects + engineers

538 Broad Hollow Road, 4th Floor East
Melville, NY 11747
631.756.8000 • www.h2m.com
Land Surveying Certificate of Authorization No.: 0018178
Engineering Certificate of Authorization No.: 0018438

CONSULTANTS:

MARK	DATE	DESCRIPTION

STATE OF NEW YORK · ANTHONY WOONGJIN KIM · 096392 · LICENSED PROFESSIONAL ENGINEER

ANTHONY WOONGJIN KIM, P.E.
N.Y. PROFESSIONAL ENGINEER Lic. No. 096392

096392027 Exp. Date

"IN THE ACCEPTANCE OF THIS DOCUMENT EXCEPT BY A LICENSED PROFESSIONAL IS A CLAIM."

DESIGNED BY:	DRAWN BY:	CHECKED BY:	REVIEWED BY:
LL	LL	AWK	-

PROJECT No:	DATE:	SCALE:
WPSD2203	FEBRUARY 2025	AS SHOWN

CLIENT

WHITE PLAINS CITY SCHOOL DISTRICT

HIGH SCHOOL ADDITION

66-22-00-01-0-016-030

CONTRACT

CONTRACT E
ELECTRICAL CONSTRUCTION

STATUS

FINAL BID DOCUMENT

SHEET TITLE

EXISTING ELECTRICAL PARTIAL GROUND FLOOR CONSTRUCTION PLAN

DRAWING No.

EX 100.00

C:\Users\mwitz\Documents\WPSD2203_Central21_M_mwitz2SEXV.rvt
3/21/2025 3:28:37 PM

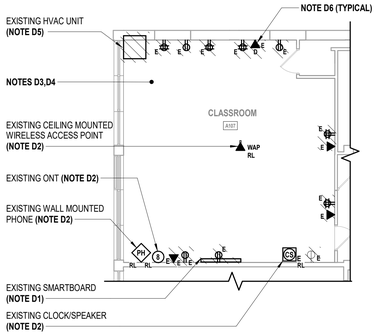

1 Electrical Partial First Floor Demolition Plan

SCALE: 1/8" = 1'-0"

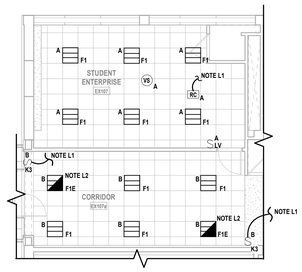

4 Electrical Partial First Floor Lighting Plan

SCALE: 1/8" = 1'-0"

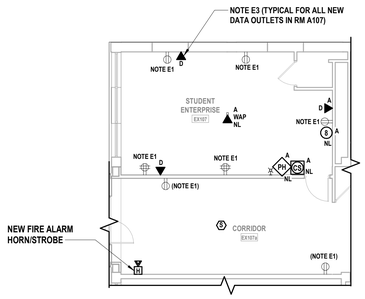

2 Electrical Partial First Floor Power, Low Voltage Plan, and Fire Alarm Plan

SCALE: 1/8" = 1'-0"

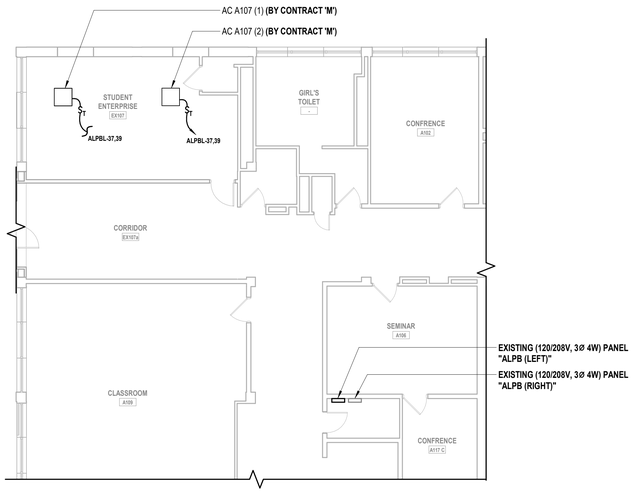

3 Electrical Partial First Floor HVAC Power Plan

SCALE: 1/8" = 1'-0"

ELECTRICAL LIGHTING GENERAL NOTES:

GL1. PROVIDE ALL REQUIRED WIRING BETWEEN SWITCHES, ROOM CONTROLLERS, AND/OR OCCUPANCY/VACANCY SENSORS FOR COMPLETE LIGHTING CONTROL. WHERE 3 OR 4 WAY SWITCHES ARE USED, PROVIDE ALL REQUIRED WIRING BETWEEN SWITCHES. WIRE SIZE SHALL EQUAL POWER FEED SIZE.

GL2. FIXTURES INDICATED WITH CIRCUIT DESIGNATIONS SHALL BE CONNECTED TO LINE SIDE OF THE CIRCUIT.

GL3. FIXTURES INDICATED WITH LETTER DESIGNATIONS SHALL BE CONNECTED TO THE SWITCH, VACANCY/OCCUPANCY SENSOR AND/OR ROOM CONTROLLER WITH CORRESPONDING LETTER DESIGNATION.

GL4. PROVIDE AND INSTALL A DEDICATED NEUTRAL FOR EACH CIRCUIT. CONTRACTOR IS NOT PERMITTED TO USE COMMON NEUTRALS.

GL5. PROVIDE BOX AND ACCESSORIES AS PER MANUFACTURER'S RECOMMENDATION FOR ALL SWITCHES, VACANCY/OCCUPANCY SENSORS, AND/OR ROOM CONTROLLERS.

GL6. VERIFY EXACT LOCATIONS AND MOUNTING HEIGHTS WITH ARCHITECT/ENGINEER IN FIELD.

GL7. ALL CEILING MOUNTED FIXTURES WITH EMERGENCY DRIVER AND ALL FIXTURES THAT ARE PART OF AN EMERGENCY LIGHTING SYSTEM, FED FROM A BATTERY SYSTEM SHALL BE LABELED. THESE LABELS SHALL BE EASILY READ FROM THE FLOOR LEVEL AND STATE THAT THE FIXTURE IS AN EMERGENCY FIXTURE AND CONTAIN PANEL NAME AND CITCUIT NUMBER THAT IT IS FED FROM.

GL8. WIRING FOR EMERGENCY DRIVER IS NOT SHOWN ON PLANS. FIXTURES WITH EMERGENCY DRIVERS SHALL BE PROVIDED WITH AN UNSWITCHED POWER FEED FROM CIRCUIT FEEDING LIGHT FIXTURE.

GL9. CONTRACTOR SHALL USE SILICONE WATER PROOF SEALANT TO SEAL TOP, LEFT, AND RIGHT EDGES OF LIGHT FIXTURES TO WALL TO PREVENT MOISTURE FROM ACCUMULATING BEHIND FIXTURE. BOTTOM EDGE SHALL BE LEFT UNSEALED FOR DRAINAGE. COLOR OF SILICONE SHALL MATCH EITHER WALL COLOR OR FIXTURE COLOR. (TYPICAL OF ALL EXTERIOR WALL MOUNTED FIXTURES.)

ELECTRICAL GENERAL DEMOLITION NOTES:

GD1. REMOVE AND DISPOSE OF INCLUDES REMOVAL OF ITEM IDENTIFIED INCLUDING ALL CONDUITS, WIRES AND CABLES, BACK TO SOURCE UNLESS OTHERWISE NOTED.

GD2. CONTRACTOR SHALL BE REQUIRED TO MAINTAIN CIRCUIT CONTINUITY FOR ALL EXISTING DEVICES ON A CIRCUIT WHEN THE DRAWINGS CALL FOR REMOVAL AND/OR DISPOSAL OF A DEVICE ON THAT CIRCUIT.

GD3. ALL CONDUITS SPECIFIED TO BE REMOVED SHALL BE CUT FLUSH WITH THE SURFACE AND SURFACE SHALL BE PATCHED UNLESS OTHERWISE NOTED. SURFACE SHALL BE PRIMED AND PAINTED TO MATCH EXISTING.

GD4. WHERE CONDUITS AND WIRING PASS THROUGH WORK AREA AND/OR ARE SCHEDULED TO REMAIN, CONTRACTOR SHALL REROUTE EXISTING CONDUIT AND WIRING. PROVIDE CONDUIT, WIRE, AND JUNCTION BOXES AS REQUIRED TO ACCOMMODATE NEW CONSTRUCTION. COORDINATE WITH OTHER TRADES.

GD5. CONTRACTOR SHALL NOTIFY FIRE ALARM MONITORING COMPANY PRIOR TO INSTALLING, RELOCATING AND/OR MODIFYING EXISTING AND/OR NEW FIRE ALARM DEVICES. PROGRAM SYSTEM AS REQUIRED TO INSTALL NEW DEVICES.

ELECTRICAL DEMOLITION KEY NOTES:

D1. CONTRACTOR SHALL REMOVE, CLEAN AND TURN OVER SMARTBOARD TO SCHOOL DISTRICT. REMOVE AND DISPOSE OF ALL ASSOCIATED WIRES AND CONDUIT BACK TO SOURCE.

D2. CONTRACTOR SHALL REMOVE, CLEAN AND STORE EXISTING WIRELESS ACCESS POINT, ONT, PHONE, CLOCK/SPEAKER DURING THE DEMOLITION AND NEW CONSTRUCTION. ONCE NEW CONSTRUCTION IS COMPLETED, CONTRACTOR SHALL CLEAN AND RE-INSTALL EXISTING WIRELESS ACCESS POINT, ONT, PHONE, CLOCK/SPEAKER REINSTALL EXISTING WIRELESS ACCESSPOINT IN NEW LOCATION WITH SUBSCRIPT "NL" ON ASSOCIATED CONSTRUCTION PLAN.

D3. CONTRACTOR SHALL REMOVE AND DISPOSE OF EXISTING LIGHT FIXUTRES INCLUDING BUT NOT LIMITED TO BALLAST, LAMPS, HOUSING, ASSOCIATED SWITCHES AND ALL WIRE AND CONDUIT BACK TO WHERE THE UNSWITCHED CIRCUIT(S) ENTERS THE ROOM. PROVIDE AND INSTALL JUNCTION BOX WHERE THE EXISTING CIRCUIT SERVING THE ROOM. REFER TO ASSOCIATED CONSTRUCTION DRAWINGS FOR ADDITIONAL INFORMATION.

D4. CONTRACTOR SHALL REMOVE AND DISPOSE OF ALL EXISTING RECEPTACLES AND ALL ASSOCIATED WIRE AND CONDUIT BACK TO WHERE THE CIRCUIT(S) ENTERS THE ROOM. PROVIDE AND INSTALL JUNCTION BOX WHERE THE EXISTING CIRCUIT SERVING THE EXISTING RECEPTACLES ENTERS THE ROOM. REFER TO ASSOCIATED CONSTRUCTION DRAWINGS FOR ADDITIONAL INFORMATION.

D5. CONTRACT 'M' SHALL REMOVE AND DISPOSE OF EXISTING EQUIPMENT. CONTRACT 'E' SHALL REMOVE AND DISPOSE OF ALL ELECTRICAL EQUIPMENT ASSOCIATED WITH THE EXISTING HVAC EQUIPMENT SCHEDULED FOR DEMOLIATION INCLUDING BUT NOT LIMITED TO DISCONNECT SWITCHES, MOTOR STARTERS, ASSOCIATED FIRE ALARM DEVICES, WIRE AND CONDUIT BACK TO SOURCE. REFER TO CONTRACT 'M' FOR ADDTIONAL INFORMATION.

D6. CONTRCTOR SHALL REMOVE AND DISPOSE OF ALL EXISTING DATA OUTLETS AND ALL ASSOCIATED WIRE AND CONDUIT BACK TO ONT SERVING THE ROOM. REFER TO ASSOCIATED CONSTRUCTION DRAWINGS FOR ADDITIONAL INFORMATION.

ELECTRICAL POWER NOTES:

E1. CONTRACTOR SHALL PROVIDE AND EXTEND WIRE AND CONDUIT TO TERMINATE AT NEW RECEPTACLES USING EXISTING CIRCUIT SERVING THE ROOM.

E2. CONDUIT RUNS AND PULL BOXES THAT ARE SHOWN ARE DIAGRAMMATICAL AND FOR RFERENCE ONLY. ELECTRONIC AS-BUILT DRAWINGS, SHOWN CONDUIT RUNS AND CIRCUITING MUST BE GIVEN TO THE ARCHITECT, ENGINEER AND DISTRICT AT THE COMPLETION OF THE JOB. REFER TO SHEET E610 FOR FEEDER INFORMATION.

E3. CONTRACTOR SHALL PROVIDE AND INSTALL CAT 6 CABLE IN 3/4" E.C. AS REQUIRED TO TERMINATE TO NEW DATA DROP AND TO THE RELOCATED EXISTING ONT.

ELECTRICAL LIGHTING NOTES:

L1. CONTRACTOR SHALL PROVIDE AND EXTEND WIRE AND CONDUIT FROM THE EXISTING LIGHTING CIRCUIT SERVING THIS ROOM TO TERMINATE AT NEW LIGHT FIXTURE AND SWITCH. WIRE AND CONDUIT SHALL BE 2 #12 AWG + #12 AWG GND IN 3/4" E.C.

L2. CONTRACTOR SHALL PROVIDE AND INSTALL AN UNSWITCHED POWER FEED FROM THE LINE SIDE OF THE LIGHT SWITCH SERVING THE LIGHT FIXTURES IN THE ROOM WHERE THE NEW EMERGENCY LIGHT FIXTURE IS SCHEDULED TO BE INSTALLED. UNSWITCHED FEED SHALL ORIGINATE FROM THE SAME CIRCUIT FEEDING LIGHT FIXTURES IN THE ROOM WHERE THE EMERGENCY LIGHT FIXTURE IS SCHEDULED TO BE INSTALLED. PROVIDE AND INSTALL WIRE AND CONDUIT AS REQUIRED. CONTRACTOR SHALL PATCH, REPAIR, RESTORE, PRIME, PAINT AND REFINISH TO MATCH ORIGINAL APPEARANCE OF ALL WALLS, CEILINGS, AND ALL BUILDING FINISHES THAT ARE DISTURBED DURING INSTALLATION OF THE UNSWITCHED POWER FEED. WIRE AND CONDUIT SHALL BE 2 #12 AWG + #12 AWG GND IN 3/4" E.C.

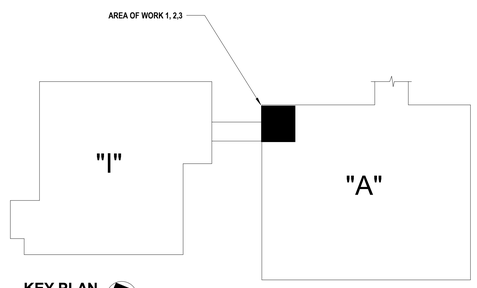

KEY PLAN

SCALE: NTS

H2M architects + engineers
538 Broad Hollow Road, 4th Floor East
Melville, NY 11747
631.756.8000 • www.h2m.com
Land Surveying Certificate of Authorization No.: 0018178
Engineering Certificate of Authorization No.: 0018438

CONSULTANTS:

MARK	DATE	DESCRIPTION

STATE OF NEW YORK · ANTHONY WOONGJIN KIM · 065392 · LICENSED PROFESSIONAL ENGINEER

ANTHONY WOONGJIN KIM, P.E.
065392 Exp. Date
N. PROFESSIONAL ENGINEER Lic. No. 065392
"ALTERATION OF THIS DOCUMENT EXCEPT BY A LICENSED PROFESSIONAL IS A VIOLATION OF STATE EDUCATION LAW"

DESIGNED BY:	DRAWN BY:	CHECKED BY:	REVIEWED BY:
LL	LL		

PROJECT No:	DATE:	SCALE:
WPSD2203	FEBRUARY 2025	AS SHOWN

CLIENT

WHITE PLAINS CITY SCHOOL DISTRICT

HIGH SCHOOL ADDITION

White Plains Public Schools · WPS · REAL LIFE LEARNING

66-22-00-01-0-016-030

CONTRACT

CONTRACT E
ELECTRICAL CONSTRUCTION

STATUS

FINAL BID DOCUMENT

SHEET TITLE

EXISTING ELECTRICAL PARTIAL FIRST FLOOR PLANS

DRAWING No.

EX 101.00

C:\Users\mvalle\Documents\WPSD2203_Central21_M_mvalle25ZVF.rvt
3/21/2025 3:28:52 PM

FIRE ALARM LEGEND

SYMBOL	DESCRIPTION	COMMENTS
FACP	FIRE ALARM CONTROL PANEL.	
RA	REMOTE ANNUNCIATOR WITH BACKBOX.	
S	SMOKE DETECTOR.	
S RAL	ABOVE CEILING SMOKE DETECTOR WITH REMOTE ALARM LAMP.	
SR SD RP	DUCT DETECTOR WITH REMOTE ALARM LAMP; "S" DENOTES SUPPLY, "R" DENOTES RETURN. PROVIDE WEATHERPROOF ENCLOSURE WHERE DETECTOR CANNOT BE INSTALLED INSIDE BUILDING.	
	HEAT DETECTOR.	
CO	CARBON MONOXIDE DETECTOR	
	HORN/STROBE COMBO.	
	SPEAKER/STROBE COMBINATION	
SPK WP	WEATHER PROOF SPEAKER/STROBE COMBO WITH BACKBOX.	
S	FIRE ALARM SPEAKER	
	STROBE.	
DH	MAGNETIC DOOR HOLDER.	
F	MANUAL PULL STATION WITH BACKBOX.	
CM	CONTROL MODULE.	
IAM	INDIVIDUAL ADDRESSABLE MODULE.	
AES	AUTOMATIC EXTINGUISHING SYSTEM.	
	MOTOR STARTER.	
EOL	END OF LINE RESISTOR.	
EL S	SMOKE DETECTOR FOR ELEVATOR RECALL.	
TS	TAMPER SWITCH	
FS	FLOW SWITCH	

ELECTRICAL FIRE ALARM GENERAL NOTES:

1. ALL WIRES TO BE INSTALLED ACCORDING TO THE LATEST REVISION OF THE NATIONAL ELECTRIC CODE OR AS DICTATED BY CONTRACT SPECIFICATIONS, AND THE LATEST EDITION OF N.F.P.A 72 OR AS REQUIRED BY LOCAL ORDINANCE.
2. ALL CONDUCTORS MUST BE TEST FREE OF OPENS, SHORTS, AND GROUNDS.
3. GROUND MUST COMPLY WITH THE NATIONAL ELECTRIC CODE. GROUND MUST BE NO.12 A.W.G.
4. ALL PANEL TERMINATIONS TO BE SUPERVISED BY A FACTORY AUTHORIZED TECHNICIAN PRIOR TO POWERING EQUIPMENT.
5. FOR COMPONENT WIRING AND INSTALLATION INFORMATION REFER TO MANUFACTURERS REQUIREMENTS
6. REFER TO CONTRACT DRAWINGS FOR APPROXIMATE DEVICE LOCATIONS. DRAWINGS REPRESENT DEVICE QUANTITIES. SHOP DRAWINGS SHALL BE SUBMITTED SHOWING SCALED LOCATIONS. CONTRACTOR TO SUBMIT PLANS STAMPED BY LICENSED NEW YORK PROFESSIONAL ENGINEER ONLY. SHOP DRAWINGS WITHOUT P.E STAMP WILL BE AUTOMATICALLY REJECTED.
7. CONTRACTOR RESPONSIBLE TO PATCH & PAINT ALL OPENINGS AS A RESULT OF REMOVAL OF EXISTING EQUIPMENT.
8. INSTALL DETECTORS A MINIMUM OF 3'-0" FROM ANY SUPPLY OR RETURN AIR REGISTERS. COORDINATE EXACT LOCATIONS OF SUPPLY/RETURNS REGISTERS WITH MECHANICAL CONTRACTOR
9. WHEN INSTALLING SHIELDED CABLE THE FOLLOWING MUST BE OBSERVED:
   A. METALLIC CONTINUITY MUST BE MAINTAINED THROUGHOUT THE CABLE RUN.
   B. THE CABLE SHIELD MUST BE ISOLATED FROM GROUND AND TERMINATED ONLY IN THE ASSOCIATED CONTROL PANEL AT THE TERMINAL INDICATED ON THE CONTROL PANEL DRAWINGS. THE REMOTE END OF THE SHIELD (AT LAST DEVICE) MUST BE TAPED AND ISOLATED FROM GROUND
10. ALL STROBE APPLIANCES SHALL BE SYNCHRONIZED. ALL ALARM INDICATING APPLIANCES SHALL SOUND A "TEMPORAL 3" CODE PATTERN.
11. TS (TAMPER SWITCH) SHALL CAUSE A SUPERVISORY TROUBLE AT THE F.A.C.P AND SEND A SIGNAL TO CENTRAL STATION IF SYSTEM IS MONITORED.
12. AFTER ALARM INDICATION, ALL FANS SHALL BE MANUALLY RESET INDEPENDENT FROM F.A.C.P. SYSTEM RESET. PROVIDE ALL REQUIRED HARDWARE ACCESSORIES, MOTOR STARTERS, CONTROLS, POWER AND CONTROL WIRING AND CONDUITS TO PROVIDE INDEPENDENT RESET OF ALL FANS AFTER ALARM INDICATION.
13. INSTALL ALL DEVICES IN ACCORDANCE WITH A.D.A REQUIREMENTS. ALL DEVICES SHALL BE MOUNTED AS FOLLOWS:
   A. MANUAL PULL STATIONS 48" O.C
   B. ALARM INDICATING APPLIANCE 80" A.F.F.
   C. VERIFY WITH CONTRACT SPECIFICATIONS FOR ANY DEVIATIONS.
14. STROBES SHALL BE WIRED TO REMAIN ACTIVE AFTER SILENCE FUNCTION IS PERFORMED.
15. PROVIDE AND INSTALL ALL NECESSARY CONTROL MODULES, SYNCHRONIZATION MODULES AND MONITOR MODULES AS REQUIRED BY MANUFACTURER.
16. COORDINATE INSTALLATION OF WATER FLOW AND TAMPER SWITCHES WITH SPRINKLER CONTRACTOR.
17. CONTRACTOR TO INSTALL NECESSARY & REQUIRED POWER SUPPLY UNITS TO ENSURE PROPER OPERATION AT ALL MAGNETIC DOOR HOLDERS AS SHOWN ON DRAWINGS.
18. PROVIDE AND INSTALL ALL REQUIRED RELAYS TO RELEASE ELECTRIC DOOR LATCHES.
19. COORDINATE EXACT LOCATION OF REMOTE ANNUNCIATOR AND F.A.C.P. WITH LOCAL FIRE MARSHALL AND OWNER.
20. PROVIDE ALL REQUIRED DUCT SMOKE DETECTORS. CONTRACTOR TO INSTALL DUCT SMOKE DETECTORS. CONTRACTOR TO INTERFACE ALL DUCT DETECTORS WITH FACP.
21. CONTRACTOR TO INSTALL NECESSARY COMPONENTS FOR ELEVATOR RECALL AS PER LOCAL FIRE MARSHALL. EACH LOBBY, AND PIT TO HAVE SMOKE DETECTION. WHERE APPLICABLE CONTRACTOR TO COORDINATE AND INSTALL NECESSARY COMPONENTS TO INTERFACE FIRE ALARM SYSTEM. ELEVATOR, AND SPRINKLER HEAD SOLENOID VALVES LOCATED IN THE ELEVATOR SHAFT.
22. CONTRACTOR SHALL PROVIDE ALL COMMUNICATION LINES AS REQUIRED. PROVIDE ALL REQUIRED WIRING AND CONDUIT TO NEW FIRE ALARM CONTROL PANEL "FACP"
23. FIRE ALARM RISER DIAGRAM IS SCHEMATIC. REFER TO FLOOR PLANS FOR DEVICE TYPES AND QUANTITIES.
24. ALL HVAC EQUIPMENT WITH A CFM RATING OF 1000 CFM OR GREATER SHALL BE INTERCONNECTED TO THE FIRE ALARM SYSTEM AND SHUT DOWN UPON FIRE ALARM SYSTEM ALARM ACTIVATION. CONTRACTOR SHALL ALSO PROVIDE AND INSTALL NEW SUPPLY AND RETURN DUCT SMOKE DETECTORS WITH REMOTE LED'S FOR ALL HVAC UNITS WITH A CFM RATING OF 2000 CFM OR GREATER.
25. PROTECTIVE SHIELDS SHALL BE PROVIDED FOR ALL PULL STATIONS. SHIELDS SHALL FIT OVER MANUAL PULL STATIONS AND SHALL INCLUDE A BATTERY OPERATED PIERCING HORN WHEN THE SHIELD IS REMOVED.
26. PLENUM WIRING TO BE USED IN ALL AREAS ABOVE DROP CEILINGS. CONDUIT MUST BE USED IN ALL MECHANICAL AND ELECTRICAL ROOMS. CONDUIT MUST ALSO BE USED IN ALL AREAS WITH OPEN CEILINGS.
27. ALL EQUIPMENT TO BE RECESSED MOUNTED AND ALL WIRING AND CONDUIT TO BE RUN CONCEALED
28. HEAT DETECTOR MOUNTED IN THE ELEVATOR SHAFT MUST BE WITHIN 2' OF THE SPRINKLER HEAD.
29. CONTRACTOR SHALL USE SILICONE WATER PROOF SEALANT TO SEAL TOP, LEFT, AND RIGHT EDGES OF FIRE ALARM DEVICES TO WALL TO PREVENT MOISTURE FROM ACCUMULATING BEHIND DEVICES IN ALL EXTERIOR AND WET LOCATIONS. BOTTOM EDGE SHALL BE LEFT UNSEALED FOR DRAINAGE. COLOR OF SILICONE SHALL MATCH EITHER WALL COLOR OR FIXTURE COLOR.
30. CONTRACTOR SHALL PROVIDE AND INSTALL FIBER-OPTIC CABLE SC CONNECTORS ON BOTH ENDS OF FIBER RUNS. PROVIDE 2 SETS OF FIBER OPTIC CABLE (6 STRAND MUTLI MODE 56/125) IN (2) 1" E.C. REFER TO SHEET FA101 FOR APPROXIMATE LOCATION OF NEW FIRE ALARM CONTROL PANEL. PROVIDE ALL PROGRAMMING AS REQUIRED.

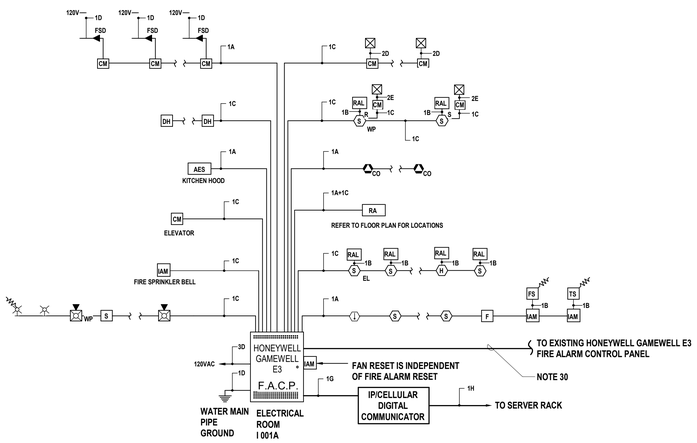

WIRE LEGEND			
	WIRE DESCRIPTION	TYPE	NOTES
A	1 PAIR TWISTED SHIELDED #18 AWG	FPLP	-
B	1 PAIR #18 AWG. NON-SHIELDED	FPLP	-
C	1 PAIR #14 AWG. NON SHIELDED	FPLP	-
D	#12 AWG. NON SHIELDED	THHN	*
E	#14 AWG. NON SHIELDED	THHN	-
F	1 PAIR TWISTED SHIELDED #16 AWG.	FPLP	-
F	MANUFACTURER RECOMMENDED CABLE	-	-
F	CAT6 IN 3/4" E.C.	-	-

1 **Fire Alarm Riser Diagram (Note 23)**
SCALE NTS

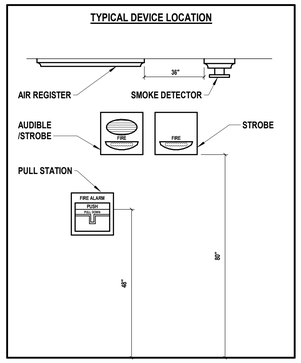

2 **Typical Fire Alarm Device Location**
SCALE NTS

	CONTROL UNIT ANNUNCIATION					NOTIFICATION			SUPPLIMENTARY		
	ACTUATE COMMON ALARM SIGNAL INDICATOR	ACTUATE COMMON ALARM SIGNAL	ACTUATE COMMON SUPERVISORY SIGNAL INDICATOR	ACTUATE COMMON TROUBLE SIGNAL	ACTUATE ZONE INDICATION	ACTUATE FULL BUILDING EVACUATION SIGNAL	DISPLAY CHANGE OF STATUS	TRANSMIT FIRE ALARM SIGNAL TO SUPERVISING STATION	TRANSMIT SUPERVISION SIGNAL TO SUPERVISING STATION	TRANSMIT TROUBLE SIGNAL TO SUPERVISING STATION	ACTUATE TO RELEASE DOOR HOLD	HVAC FAN SHUTDOWN	INITIATE EXTERIOR STROBE
MANUAL PULL STATION	●	●			●	●	●	●			●	●	●
SMOKE DETECTOR	●	●			●	●	●	●			●	●	●
HEAT DETECTOR	●	●			●	●	●	●			●	●	●
DUCT DETECTOR	●	●			●	●	●	●			●	●	●
CARBON MONOXIDE DETECTOR					●		●		●		●		
FIRE PANEL AC POWER FAILURE			●						●				
FA SYSTEM LOW BATTERY				●						●			
OPEN CIRCUIT				●						●			
GROUND FAULT				●						●			
NOTIFICATION APPLIANCE CIRCUIT SHORT				●						●			

3 **Fire Alarm Sequence of Operations**
SCALE NTS

H2M architects + engineers
538 Broad Hollow Road, 4th Floor East
Melville, NY 11747
631.756.8000 • www.h2m.com
Land Surveying Certificate of Authorization No.: 0018178
Engineering Certificate of Authorization No.: 0018438

CONSULTANTS:

MARK	DATE	DESCRIPTION

STATE OF NEW YORK · ANTHONY WOONGJIN KIM · 096392 · LICENSED PROFESSIONAL ENGINEER

06/30/2027
ANTHONY WOONGJIN KIM, P.E.
Exp. Date
N.Y. PROFESSIONAL ENGINEER LIC. No. 092392
"ALTERATION OF THIS DOCUMENT EXCEPT BY A LICENSED PROFESSIONAL IS A CRIME."

DESIGNED BY:	DRAWN BY:	CHECKED BY:	REVIEWED BY:
LL	LL	LK	-
PROJECT No: WPSD2203	DATE: FEBRUARY 2025	SCALE: AS SHOWN	

CLIENT
WHITE PLAINS CITY SCHOOL DISTRICT

HIGH SCHOOL ADDITION

White Plains Public Schools · WP · REAL LIFE LEARNING

66-22-00-01-0-016-030

CONTRACT
CONTRACT E
ELECTRICAL CONSTRUCTION

STATUS
FINAL BID DOCUMENT

SHEET TITLE
FIRE ALARM LEGENDS AND RISER DIAGRAMS

DRAWING No.
FA 001.00

C:\Users\mrivitz\Documents\WPSD2203_Central\21_M_mrivitzSZKV.rvt
3/21/2025 3:25:58 PM

ELECTRICAL GENERAL FIRE ALARM NOTE:

G1. CONTRACTOR SHALL PROVIDE ALL MATERIALS AND ACCESSORIES, WIRE AND CONDUIT AS REQUIRED TO INTERFACE FIRE ALARM EQUIPMENT AND DEVICES WITH FIRE ALARM CONTROL PANEL

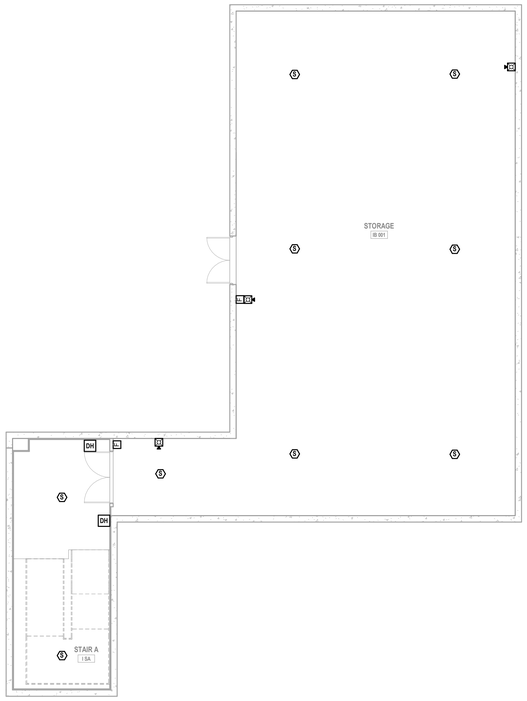

1 **Electrical Basement Fire Alarm Plan**
SCALE: 1/8" = 1'-0"

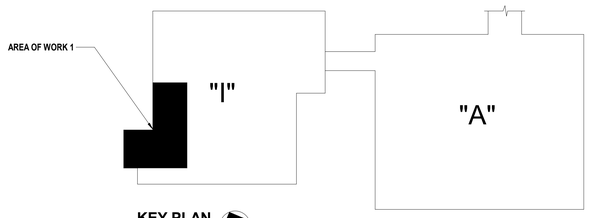

KEY PLAN
SCALE: NTS

H2M architects + engineers

538 Broad Hollow Road, 4th Floor East
Melville, NY 11747
631.756.8000 • www.h2m.com
Land Surveying Certificate of Authorization No.: 0018178
Engineering Certificate of Authorization No.: 0018438

CONSULTANTS:

MARK	DATE	DESCRIPTION

STATE OF NEW YORK · ANTHONY WOONGJIN KIM · 092583 · LICENSED PROFESSIONAL ENGINEER

06/30/2027
Exp. Date

ANTHONY WOONGJIN KIM, P.E.
NY PROFESSIONAL ENGINEER Lic. No. 092583
"ALTERATION OF THIS DOCUMENT EXCEPT BY LICENSED PROFESSIONAL IS A CLIENT"

DESIGNED BY:	DRAWN BY:	CHECKED BY:	REVIEWED BY:
LL	LL		
PROJECT No:	DATE:	SCALE:	
WPSD2203	FEBRUARY 2025	AS SHOWN	

CLIENT

WHITE PLAINS CITY SCHOOL DISTRICT

HIGH SCHOOL ADDITION

66-22-00-01-0-016-030

CONTRACT
CONTRACT E
ELECTRICAL CONSTRUCTION

STATUS
FINAL BID DOCUMENT

SHEET TITLE
ELECTRICAL BASEMENT FIRE ALARM PLAN

DRAWING No.
FA 100.00

C:\Users\mvoltz\Documents\WPSD2203_Central21_M_mvoltz252VF.rvt
3/21/2025 3:29:04 PM

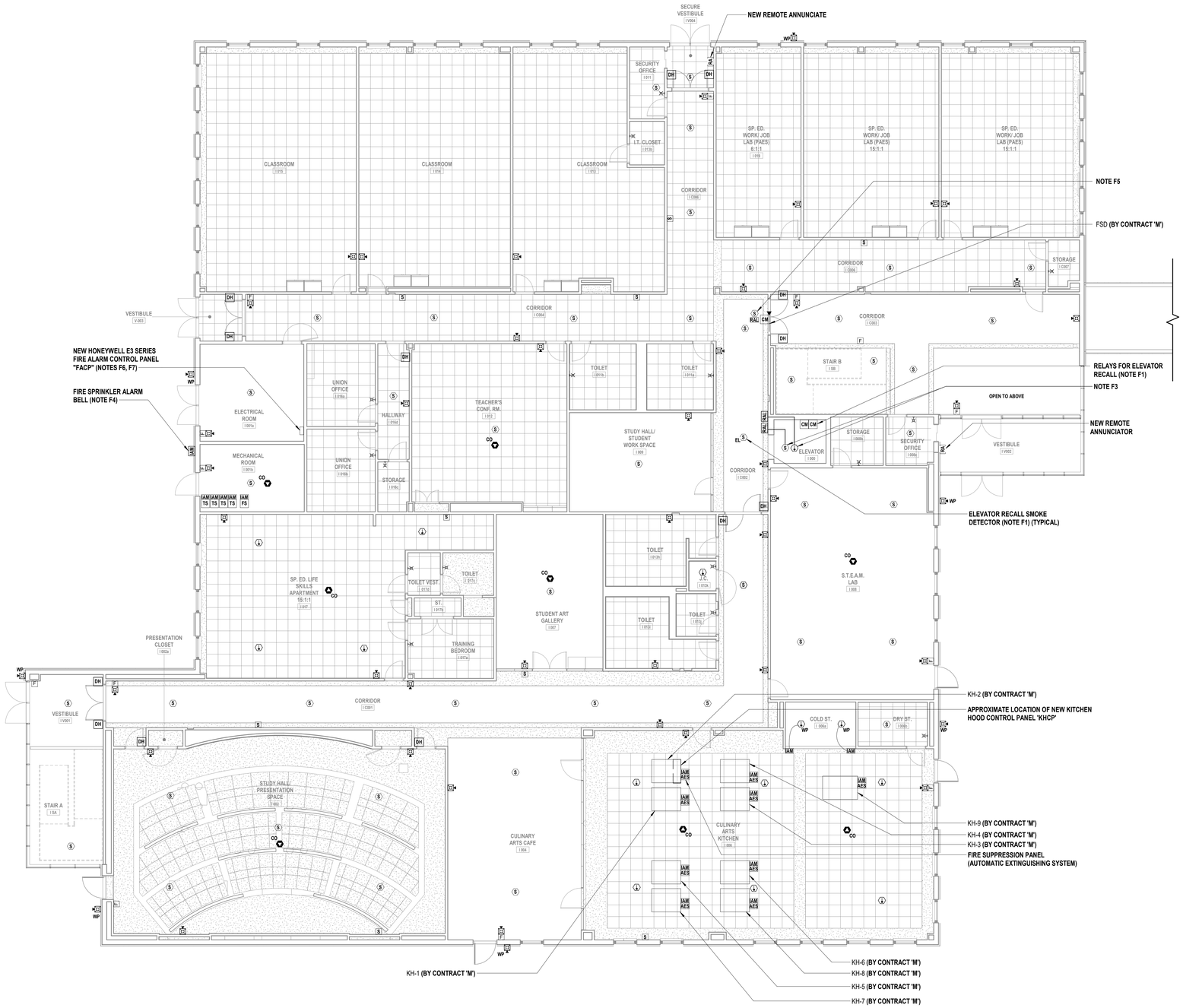

1 **Electrical Ground Floor Fire Alarm Plan**
SCALE: 1/8" = 1'-0"

ELECTRICAL GENERAL FIRE ALARM NOTE:

G1. CONTRACTOR SHALL PROVIDE ALL MATERIALS AND ACCESSORIES, WIRE AND CONDUIT AS REQUIRED TO INTERFACE FIRE ALARM EQUIPMENT AND DEVICES WITH FIRE ALARM CONTROL PANEL

ELECTRICAL FIRE ALARM NOTES:

F1. CONTRACTOR SHALL PROVIDE AND INSTALL NEW ELEVATOR RECALL RELAYS. INTEGRATE WITH FIRE ALARM CONTROL PANEL. REFER TO SPECIFICATION SECTION 283100 FOR ADDITION INFORMATION.
- WHEN RECALL SMOKE DETECTOR ADJACENT TO THE GROUND FLOOR ELEVATOR DOOR IS ACTIVATED, ELEVATOR SHALL RECALL TO THE FIRST FLOOR.
- WHEN FIRST FLOOR RECALL SMOKE DETECTOR AND/OR ELEVATOR PIT RECALL SMOKE/HEAT DETECTOR AT THE TOP OF THE ELEVATOR SHAFT IS ACTIVATED, ELEVATOR SHALL RECALL TO THE GROUND FLOOR.

F2. SHUNT TRIP CIRCUIT BREAKERS FOR ALL EQUIPMENT LOCATED UNDER KITCHEN HOOD SHALL DE-ENERGIZE UPON ANSUL SYSTEM ACTIVATION. PROVIDE ALL PROGRAMMING AS REQUIRED.

F3. CONTRACTOR SHALL PROVIDE AND INSTALL A SMOKE DETECTOR AND HEAT DETECTOR IN THE ELEVATOR PIT. ELEVATOR PIT DETECTOR SHALL BE INSTALLED BELOW LOWEST TRAVEL OF ELEVATOR. CONTRACTOR SHALL PROVIDE AND INSTALL TWO (2) CEILING MOUNTED REMOTE ALARM LAMPS IN THE CORRIDOR ADJACENT TO THE ELEVATOR DOORS TO INDICATE WHEN THE ELEVATOR PIT SMOKE AND HEAT DETECTOR IS IN ALARM. PROVIDE AND INSTALL A LABEL ON REMOTE ALARM LAMP STATING "ELEVATOR PIT SMOKE DETECTOR" AND "ELEVATOR PIT HEAT DETECTOR".

F4. CONTRACTOR SHALL PROVIDE AND INSTALL NEW SPRINKLER HORN/STROBE WITH BLUE LENS (WHEELOCK MODEL #MTWPB-24MCCH-NW OR APPROVED EQUAL) (APPROXIMATELY 8'-0" AFG. PROVIDE AND INSTALL AN INDIVIDUAL ADDRESSABLE MODULE (IAM) AND INTEGRATE THE DEVICE WITH THE NEW FIRE ALARM CONTROL PANEL (FACP). REFER TO FIRE ALARM RISER DIAGRAM FOR ADDITIONAL INFORMATION. THIS HORN/STROBE SHALL ONLY BE ACTIVATED WHEN THE FLOW SWITCH IS ACTIVATED. PROVIDE A BLUE PHENOLIC SIGN (6" HEIGHT X 8" WIDTH MINIMUM) WITH WHITE LETTERING STATING "SPRINKLER WATER FLOW NOTIFICATION. " SECURE WITH 4 STAINLESS STEEL MASONRY SCREWS MINIMUM.

F5. CONTRACTOR SHALL PROVIDE AND INSTALL A DUCT SMOKE DETECTOR WITHIN 5'-0" OF THE FIRE/SMOKE DAMPER (FSD). ASSOCIATED FIRE/SMOKE DAMPER SHALL CLOSE UPON DUCT SMOKE DETECTOR ALARM FROM THE DETECTOR WITHIN 5'-0". A REMOTE ALARM LAMP SHALL BE INSTALLED ON THE CEILING BELOW DETECTOR SO ALARM CAN BE SEEN FROM THE FLOOR BELOW.

F6. FOR BIDDING PURPOSES, CONTRACTOR SHALL PROVIDE AND INSTALL 300'-0" OF ANTENNA WIRING AND SHALL MOUNT NEW IP/CELLULAR ANTENNA TO THE LOCATION WITH THE STRONGEST CELLULAR SIGNAL RECEPTION. PROVIDE AND INSTALL ALL MOUNTING HARDWARE AND ACCESSORIES AS REQUIRED.

F7. NEW HONEYWELL GAMEWELL E3 FIRE ALARM CONTROL PANEL "FACP" SHALL BE PROVIDED BY SCHOOL DISTRICT AND INSTALLED BY CONTRACTOR.

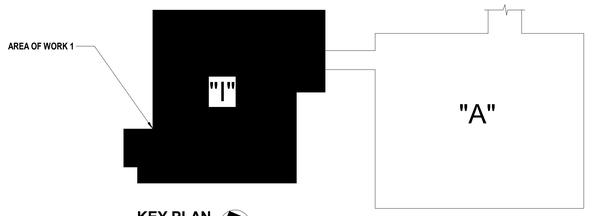

KEY PLAN
SCALE: NTS

H2M architects + engineers
538 Broad Hollow Road, 4th Floor East
Melville, NY 11747
631.756.8000 • www.h2m.com
Land Surveying Certificate of Authorization No.: 0018178
Engineering Certificate of Authorization No.: 0018438

CONSULTANTS:

MARK	DATE	DESCRIPTION

ANTHONY WOONGJIN KIM, P.E.
N.Y. PROFESSIONAL ENGINEER LIC. No. 092393

DESIGNED BY:	DRAWN BY:	CHECKED BY:	REVIEWED BY:
LL	LL	LK	
PROJECT No: WPSD2203	DATE: FEBRUARY 2025	SCALE: AS SHOWN	

CLIENT
WHITE PLAINS CITY SCHOOL DISTRICT

HIGH SCHOOL ADDITION

66-22-00-01-0-016-030

CONTRACT
CONTRACT E ELECTRICAL CONSTRUCTION

STATUS
FINAL BID DOCUMENT

SHEET TITLE
ELECTRICAL GROUND FLOOR FIRE ALARM PLAN

DRAWING No.
FA 101.00

C:\Users\mwalz\Documents\WPSD2203_CentralH21_M_mwalzSZV.rvt
3/21/2025 3:20:18 PM

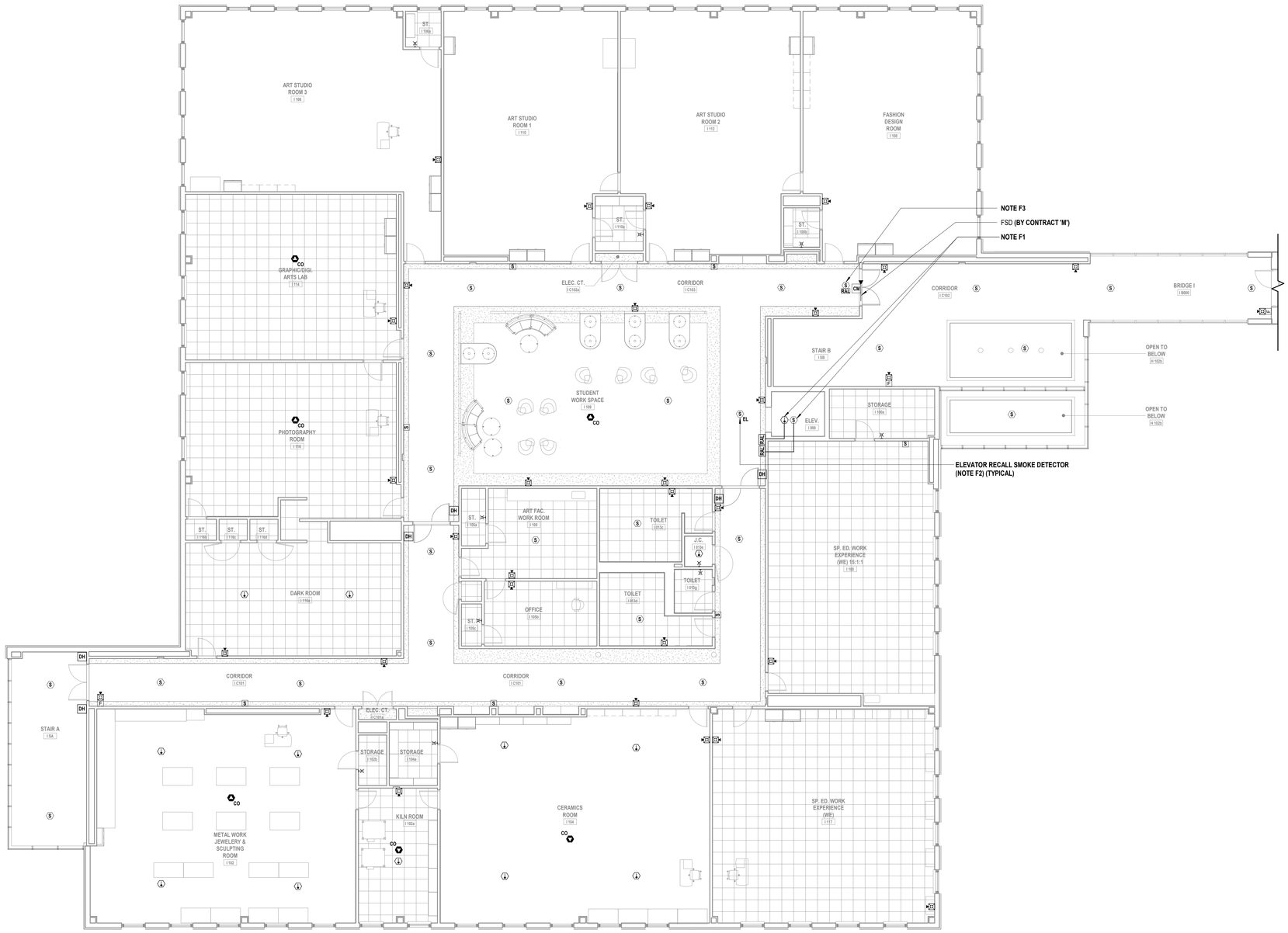

1 **Electrical First Floor Fire Alarm Plan**
SCALE: 1/8" = 1'-0"

ELECTRICAL GENERAL FIRE ALARM NOTE:

G1. CONTRACTOR SHALL PROVIDE ALL MATERIALS AND ACCESSORIES, WIRE AND CONDUIT AS REQUIRED TO INTERFACE FIRE ALARM EQUIPMENT AND DEVICES WITH FIRE ALARM CONTROL PANEL

ELECTRICAL FIRE ALARM NOTES:

F1. CONTRACTOR SHALL PROVIDE AND INSTALL A SMOKE DETECTOR AND HEAT DETECTOR IN THE ELEVATOR SHAFT. ELEVATOR SHAFT DETECTOR SHALL BE INSTALLED ABOVE HIGHEST TRAVEL OF ELEVATOR. CONTRACTOR SHALL PROVIDE AND INSTALL TWO (2) CEILING MOUNTED REMOTE ALARM LAMPS IN THE CORRIDOR ADJACENT TO THE ELEVATOR DOORS TO INDICATE WHEN THE ELEVATOR SHAFT SMOKE AND HEAT DETECTOR IS IN ALARM. PROVIDE AND INSTALL A LABEL ON REMOTE ALARM LAMP STATING "ELEVATOR SHAFT SMOKE DETECTOR" AND "ELEVATOR SHAFT HEAT DETECTOR".

F2. CONTRACTOR SHALL PROVIDE AND INSTALL NEW ELEVATOR RECALL RELAYS. INTEGRATE WITH FIRE ALARM CONTROL PANEL. REFER TO SPECIFICATION SECTION 283100 FOR ADDITION INFORMATION.
- WHEN RECALL SMOKE DETECTOR ADJACENT TO THE GROUND FLOOR ELEVATOR DOOR IS ACTIVATED, ELEVATOR SHALL RECALL TO THE FIRST FLOOR.
- WHEN FIRST FLOOR RECALL SMOKE DETECTOR AND/OR ELEVATOR PIT RECALL SMOKE/HEAT DETECTOR AT THE TOP OF THE ELEVATOR SHAFT IS ACTIVATED, ELEVATOR SHALL RECALL TO THE GROUND FLOOR.

F3. CONTRACTOR SHALL PROVIDE AND INSTALL A DUCT SMOKE DETECTOR WITHIN 5'-0" OF THE FIRE/SMOKE DAMPER (FSD). ASSOCIATED FIRE/SMOKE DAMPER SHALL CLOSE UPON DUCT SMOKE DETECTOR ALARM FROM THE DETECTOR WITHIN 5'-0". A REMOTE ALARM LAMP SHALL BE INSTALLED ON THE CEILING BELOW DETECTOR SO ALARM CAN BE SEEN FROM THE FLOOR BELOW.

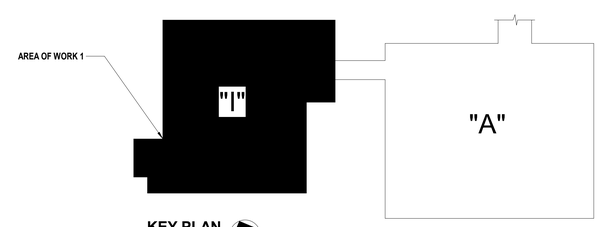

KEY PLAN
SCALE: NTS

H2M architects + engineers
538 Broad Hollow Road, 4th Floor East
Melville, NY 11747
631.756.8000 • www.h2m.com
Land Surveying Certificate of Authorization No.: 0018178
Engineering Certificate of Authorization No.: 0018438

CONSULTANTS:

MARK	DATE	DESCRIPTION

STATE OF NEW YORK · ANTHONY WOONGJIN KIM · 092583 · LICENSED PROFESSIONAL ENGINEER

06/30/2027 Exp. Date
ANTHONY WOONGJIN KIM, P.E.
NY PROFESSIONAL ENGINEER Lic. No. 092583
"ALTERATION OF THIS DOCUMENT EXCEPT BY A LICENSED PROFESSIONAL IS A CLASSIC."

DESIGNED BY:	DRAWN BY:	CHECKED BY:	REVIEWED BY:
LL	LL		
PROJECT No: WPSD2203	DATE: FEBRUARY 2025	SCALE: AS SHOWN	

CLIENT
WHITE PLAINS CITY SCHOOL DISTRICT

HIGH SCHOOL ADDITION

White Plains Public Schools · WP · REAL LIFE LEARNING

66-22-00-01-0-016-030

CONTRACT
CONTRACT E
ELECTRICAL CONSTRUCTION

STATUS
FINAL BID DOCUMENT

SHEET TITLE
ELECTRICAL FIRST FLOOR FIRE ALARM PLAN

DRAWING No.
FA 102.00

C:\Users\mvoltz\Documents\WPSD2203_Central21_M_mvoltz252VF.rvt
3/21/2025 3:29:30 PM

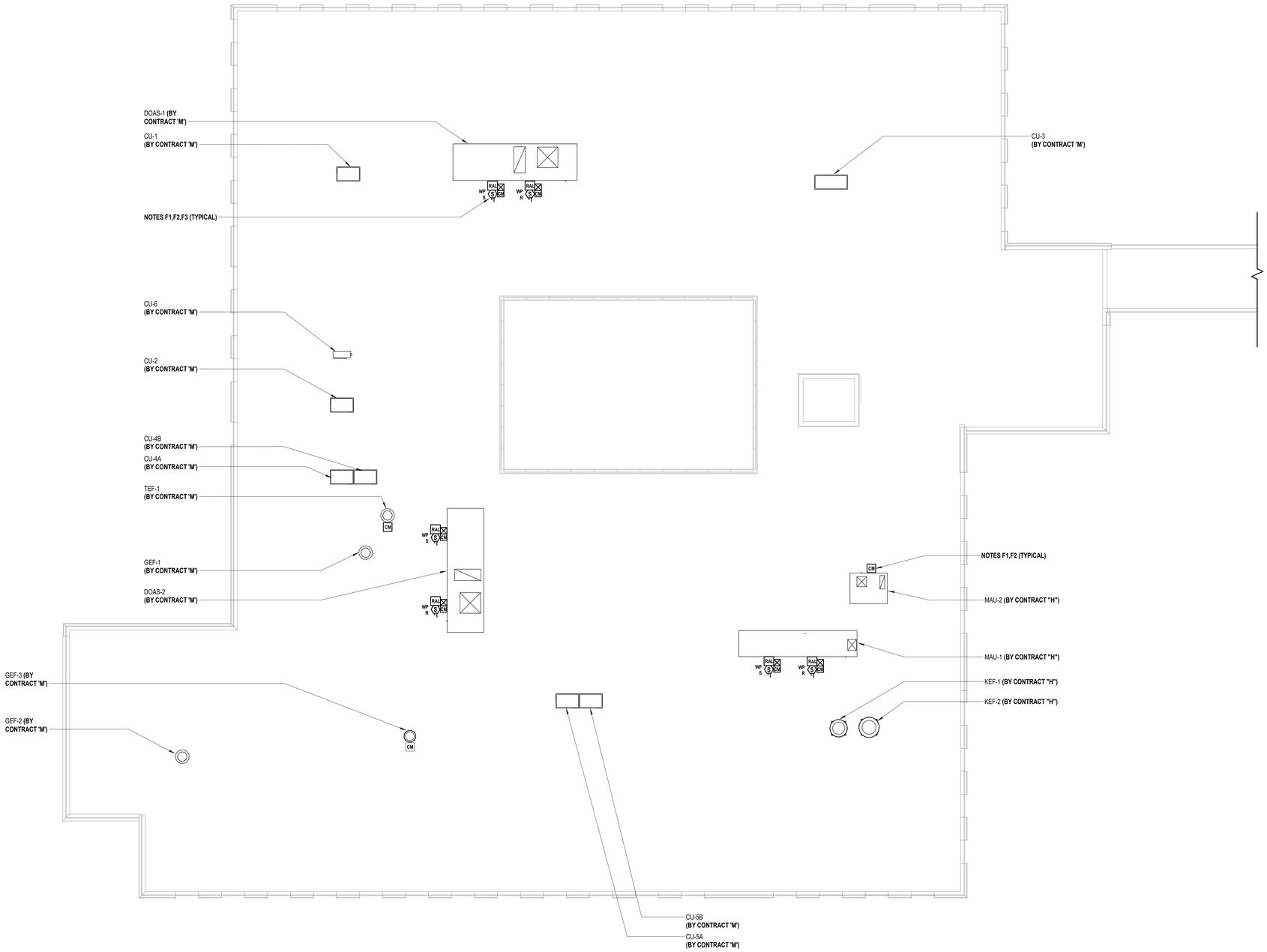

1 **Electrical Roof Fire Alarm Plan**
SCALE: 1/8" = 1'-0"

ELECTRICAL FIRE ALARM KEY NOTES:

1. CONTRACTOR SHALL PROVIDE AND INSTALL NEW FIRE ALARM DEVICES AND ALL NECESSARY EQUIPMENT TO MAKE A PROPER CONNECTION TO NEW FIRE ALARM CONTROL PANEL (FACP) USING MANUFACTURER'S RECOMMENDED WIRING IN 3/4" E.C. CONTRACTOR SHALL PROVIDE AND INSTALL ALL EXPANSION CARDS. WIRE, CONDUIT, RELAYS, POWER SUPPLIES, BATTERIES, EXTENDERS, PROGRAMMING, MOUNTING HARDWARE, AND JUNCTION BOXES AS REQUIRED. COORDINATE EXACT MOUNTING LOCATION AND HEIGHT WITH ARCHITECT PRIOR TO INSTALLATION. TYPICAL OF ALL FIRE ALARM DEVICES. REFER TO SHEET FA101 FOR LOCATION OF NEW FIRE ALARM CONTROL PANEL.
2. CONTRACTOR SHALL PROVIDE AND INSTALL NEW ADDRESSABLE SHUTDOWN CONTROL MODULES, ASSOCIATED RELAYS, WIRING AND CONDUIT AS REQUIRED TO INTEGRATE HVAC EQUIPMENT WITH FIRE ALARM SYSTEM. INSTALLATION LOCATIONS OF NEW SHUTDOWN CONTROL MODULES IS APPROXIMATE AND SHALL BE FIELD VERIFIED BY THE CONTRACTOR.
3. CONTRACTOR SHALL PROVIDE AND INSTALL NEW DUCT DETECTORS WITH WEATHER PROOF ENCLOSURE AND CONTROL WIRING ON ALL HVAC SUPPLY DUCTS AND RETURN DUCTS IN DUCT WORK BELOW HVAC UNIT. PROVIDE AND INSTALL REMOTE ALARM LAMP MOUNTED ON THE FINISHED CEILING BELOW EACH DUCT DETECTOR. PROVIDE AND INSTALL ALL WIRE AND CONDUIT AS REQUIRED FOR DUCT DETECTOR AS PER MANUFACTURER RECOMMENDATION.

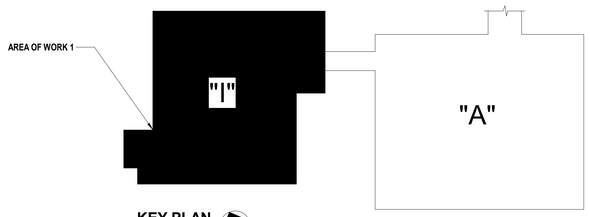

KEY PLAN
SCALE: NTS

H2M architects + engineers
538 Broad Hollow Road, 4th Floor East
Melville, NY 11747
631.756.8000 • www.h2m.com
Land Surveying Certificate of Authorization No.: 0018178
Engineering Certificate of Authorization No.: 0018438

CONSULTANTS:

MARK	DATE	DESCRIPTION

STATE OF NEW YORK · ANTHONY WOONGJIN KIM · 096392027 · LICENSED PROFESSIONAL ENGINEER

ANTHONY WOONGJIN KIM, P.E.
096392027 Exp. Date
N.Y. PROFESSIONAL ENGINEER Lic. No. 0096392

"IN THEIR ABSENCE FOR EXCLUSIVE USE BY A LICENSED PROFESSIONAL ENGINEER"

DESIGNED BY:	DRAWN BY:	CHECKED BY:	REVIEWED BY:
LL	LL		

PROJECT No:	DATE:	SCALE:
WPSD2203	FEBRUARY 2025	AS SHOWN

CLIENT
WHITE PLAINS CITY SCHOOL DISTRICT

HIGH SCHOOL ADDITION

White Plains Public Schools · WP · REAL LIFE LEARNING

66-22-00-01-0-016-030

CONTRACT
CONTRACT E
ELECTRICAL CONSTRUCTION

STATUS
FINAL BID DOCUMENT

SHEET TITLE
ELECTRICAL ROOF FIRE ALARM PLAN

DRAWING No.
FA 110.00

C:\Users\mwitz\Documents\WPSD2203_Contract21_M_mwitz25ZKVF.rvt

3/21/2025 1:29:38 PM