SPRINKLER SPECIFICATIONS

WET SYSTEMS - AREAS WITH NO HUNG CEILING - AUTOMATIC UPRIGHT AND PENDENT HEADS SHALL BE TYCO FIRE PRODUCTS MODEL TY-FRB, BRASS PLATED FINISH.

WET SYSTEMS - GYP. BD. OR ACOUSTICAL CEILING TILE - CONCEALED PENDENT AUTOMATIC SPRINKLER HEADS SHALL BE TYCO FIRE PRODUCTS MODEL RFII - QUICK RESPONSE, WITH WHITE COVER PLATE.

- SPRINKLER HEADS WITHIN THE MECHANICAL, ELECTRICAL, TELEPHONE AND ELEVATOR MACHINE ROOMS AND WHERE ADDITIONALLY INDICATED SHALL BE RATED AT 212°F.
- ALL HEADS SHALL HAVE TEMPERATURE RATING OF 165°F UNLESS OTHERWISE NOTED.

SPRINKLER DESIGN CRITERIA

BUILDING IS CLASSIFIED IN 'E' OCCUPANCY GROUP (LIGHT HAZARD) WITH INCIDENTAL STORAGE SPACES AND MECHANICAL SPACES (CLASSIFIED AS ORDINARY HAZARD GROUP 1). THERE ARE NO AREAS CLASSIFIED AS 'EXTRA HAZARD'

LIGHT HAZARD OCCUPANCY	(OFFICE AREAS, TOILET ROOMS LOBBY AREAS)
AREA OF APPLICATION:	1500 SQ. FT. (REMOTE AREA)
MAXIMUM COVERAGE PER SPRINKLER:	225 SQ. FT.
DESIGN DENSITY:	0.10 GPM PER SQUARE FOOT
SPACING BETWEEN SPRINKLERS:	15'-0" MAXIMUM
DISTANCE BETWEEN SPRINKLERS & WALLS:	1/2 OF ALLOWABLE DISTANCE BETWEEN SPRINKLERS

ORDINARY HAZARD (GROUP 1) OCCUPANCY	(STORAGE ROOMS, MECH & ELEC EQUIPMENT SPACES)
AREA OF APPLICATION:	1500 SQ. FT. (REMOTE AREA)
MAXIMUM COVERAGE PER SPRINKLER:	130 SQ. FT.
DESIGN DENSITY:	0.15 GPM PER SQUARE FOOT
SPACING BETWEEN SPRINKLERS:	15'-0" MAXIMUM
DISTANCE BETWEEN SPRINKLERS & WALLS:	1/2 OF ALLOWABLE DISTANCE BETWEEN SPRINKLERS

CLASS III COMMODITY STORAGE	(HIGH PILE STORAGE WAREHOUSE)
AREA OF APPLICATION:	2000 SQ. FT. (REMOTE AREA)
MAXIMUM COVERAGE PER SPRINKLER:	100 SQ. FT.
DESIGN DENSITY:	SEE DRAWINGS FOR DETAILS
SPACING BETWEEN SPRINKLERS:	10'-0" MAXIMUM
DISTANCE BETWEEN SPRINKLERS & WALLS:	1/2 OF ALLOWABLE DISTANCE BETWEEN SPRINKLERS

FIRE PROTECTION DEMOLITION NOTES

1. GENERAL

   A. PRIOR TO PRORPOSAL SUBMISSION, THIS CONTRACTOR SHALL VISIT THE SITE TO REVIEW THE EXISTING CONDITIONS ASSOCIATED WITH THE SCOPE OF WORK AND ADJACENT AREAS TO ASCERTAIN THE DIFFICULTIES WHICH WILL AFFECT THE EXECUTION OF THE WORK OF THIS CONTRACT.

   B. SUBMISSION OF A PROPOSAL WILL BE CONSTRUED AS EVIDENCE THAT THE ABOVE SITE EXAMINATION HAS BEEN MADE AND LATER CLAIMS WILL NOT BE RECOGNIZED FOR EXTRA LABOR, EQUIPMENT OR MATERIALS REQUIRED BECAUSE OF DIFFICULTIES ENCOUNTERED WHICH COULD HAVE BEEN FORESEEN HAD SUCH AN EXAMINATION BEEN MADE.

   C. DEMOLITION WORK SHALL INCLUDE ALL MATERIALS, LABOR, EXTENSIONS, CONNECTIONS, CUTTING, REPAIRING, ADAPTING AND OTHER FIRE PROTECTION WORK REQUIRED TO MAINTAIN SERVICE PENDING THE COMPLETION OF THE PERMANENT WORK. COORDINATE THE EXTENT OF DEMOLITION WORK WITH THE ARCHITECT AND BUILDING MANAGEMENT.

2. SCOPE OF WORK

   A. ALL EXISTING WORK REQUIRED TO REMAIN BUT INTERFERING WITH PROPOSED NEW FIRE PROTECTION (AS WELL AS ELECTRICAL, MECHANICAL, AND GENERAL CONSTRUCTION WORK) SHALL BE RELOCATED AND RECONNECTED (USING MATERIALS CONFORMING TO STANDARDS OF THIS CONTRACT.

   B. REMOVE ALL SPRINKLER HEADS, PIPING, VALVING AND HANGERS ASSOCIATED WITH PIPING TO BE REMOVED BACK TO MAINS. IDENTIFY ALL PIPING BY SERVICE TYPE AND CAP AT MAINS.

   C. REMOVE EXISTING SPRINKLER WORK AS INDICATED BELOW:

      a. REMOVE ALL EXISTING SPRINKLER WORK BACK TO RISER AND CAP, OR AS NOTED ON DRAWINGS.

      b. CONTRACTOR TO CONTACT BUILDING MANAGEMENT AND TENANT REGARDING REMOVAL SCOPE OF WORK TO MAINTAIN CONTINUITY OF ALL SERVICES TO ALL TENANTS WHO ARE TO REMAIN OPERATIONAL AND NOT BE AFFECTED BY DEMOLITION WORK.

      c. ALL EXISTING BUILDING SPRINKLER VALVES SHALL REMAIN.

   D. PROVIDE ADDITIONAL SUPPORT FOR ALL EXISTING PIPING TO REMAIN WHICH ARE AFFECTED BY DEMOLITION OF EXISTING CEILING AND PARTITIONS.

   E. ALL MATERIALS AND EQUIPMENT SHALL BE DISPOSED OF IN ACCORDANCE WITH APPLICABLE LAWS AND ENVIRONMENTAL REGULATIONS.

   F. COORDINATE WITH OWNER TO DETERMINE WHETHER EQUIPMENT IS TO BE TURNED OVER FOR FUTURE USE AND STORED IN THEIR ASSOCIATED STORAGE LOCATIONS.

   G. WHEN EXISTING SPRINKLER SYSTEM IS DEACTIVATED THIS CONTRACTOR TO DESIGN, FILE AND PROVIDE A TEMPORARY SPRINKLER LOOP (OR REQUIRED SPRINKLER PROTECTION WITHIN THE CONSTRUCTION SPACE (PARTIAL FLOOR CONSTRUCTION) SUBJECT TO FIRE DEPARTMENT APPROVAL) AROUND THE CORE/CONSTRUCTION EGRESS PATHS OR PROVIDE A 24 HOUR FIREWATCH (SUBJECT TO FIRE DEPARTMENT APPROVAL) UNTIL NEW SPRINKLER SYSTEM BECOMES ACTIVE. INCLUDE ALL IN BID PRICE.

FIRE PROTECTION NOTE

1. THIS CONTRACTOR SHALL PROVIDE FIRE PROTECTION THROUGHOUT THE ENTIRE SPACE WITHIN THE SCOPE OF WORK AS REQUIRED BY THE LOCAL CODES, LOCAL FIRE DEPARTMENT REGULATIONS, BUILDING MANAGEMENT REQUIREMENTS AND NFPA 13 FOR THE DURATION OF THE PROJECT. ANY TEMPORARY FIRE PROTECTION SHALL BE REMOVED UPON ACTIVATION OF PERMANENT FIRE PROTECTION SYSTEM.
2. SPRINKLER HEADS SHALL BE ±¼" FROM CENTER OF TILE, CONTRACTOR SHALL ALLOW FOR ALL REQUIRED FITTINGS TO ACHIEVE THIS AND INCLUDE THIS IN THEIR CONTRACT PRICE.
3. CONTRACTOR SHALL COORDINATE ALL NEW WORK WITH NEW WORK OF OTHER TRADES AND EXISTING CONDITIONS.
4. MINIMUM PIPE SIZE TO ANY SPRINKLER HEAD SHALL BE 1 INCH.
5. SPRINKLER PIPE SIZES SHOWN ARE FOR COST ESTIMATING ONLY, AND FOR FILING WITH THE BUILDING DEPARTMENT. THIS CONTRACTOR IS TO PROVIDE THEIR OWN HYDRAULIC CALCULATIONS TO VERIFY PIPE SIZING AND INCLUDE ANY INCREASED/DECREASED PIPE SIZING WITHIN THEIR CONTRACT PRICE.

PLOT PLAN

NOT TO SCALE

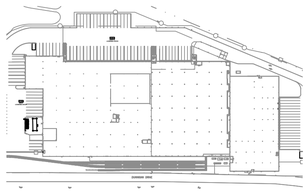

SPRINKLER LEGEND

NEW UPRIGHT SPRINKLER	OS&Y VALVE W/ TS
NEW PENDENT SPRINKLER	CHECK VALVE
NEW SIDEWALL SPRINKLER	PRESSURE REDUCING VALVE
NEW PENDENT CONCEALED SPRINKLER	VALVE TAMPER SWITCH
EXISTING UPRIGHT SPRINKLER	FLOOR CONTROL VALVE ASSEMBLY
EXISTING PENDENT SPRINKLER	SIAMESE CONNECTION
EXISTING PENDENT SPRINKLER	FIRE HOSE CABINET
EXISTING SIDEWALL SPRINKLER	FIRE HOSE RACK
EXISTING PENDENT CONCEALED SPRINKLER	FIRE HOSE VALVE
EXISTING UPRIGHT SPRINKLER TO BE REMOVED	3-WAY ROOF MANIFOLD
NEW UPRIGHT SPRINKLER, RATED AT 212°F	SPRINKLER PREACTION VALVE
NEW PENDENT CONCEALED SPRINKLER, PREACTION	SMOKE DETECTOR
PIPE UP	HEAT DETECTOR
PIPE DROP	MANUAL PULL STATION
BOTTOM CONNECTION	
TOP CONNECTION	
CAP	

LINE REPRESENTATION

- NEW SPRINKLER PIPING
- EXISTING SPRINKLER PIPING
- NEW DRAIN PIPING
- EXISTING SPRINKLER PIPING TO BE REMOVE AND DISCARDED
- REMOVE EXISTING SPRINKLER HEAD AND ASSOCIATED DROP NIPPLES BACK TO HORIZONTAL PIPING AND EXTEND NEW PIPING TO NEW HEAD LOCATION AS REQUIRED.

DRAWING NOTATIONS

- DRAWING HEXAGON NOTE TAG
- DRAWING CIRCLE NOTE TAG
- TAG SECTION DESIGNATION ON DRAWING WHERE SECTION IS CUT A-SECTION DESIGNATION B-DRAWING NUMBER
- POINT OF NEW CONNECTION TO EXISTING
- POINT OF DISCONNECTION FROM EXISTING
- REVISION SYMBOL
- RISER SYSTEM / RISER NUMBER
- PIPING FLOW DIRECTION
- HYDRAULIC NODE DESIGNATION
- HYDRAULIC PIPE DESIGNATION

ABBREVIATION

ABD	AUTOMATIC BALL DRIP
AFF	ABOVE FINISHED FLOOR
DR	DRAIN
FCVA	FLOOR CONTROL VALVE ASSEMBLY
FDC	FIRE DEPARTMENT CONNECTION
FHC	FIRE HOSE CABINET
FHR	FIRE HOSE RACK
FHV	FIRE HOSE VALVE
FHVC	FIRE HOSE VALVE CABINET
FSP	FIRE STANDPIPE
SP	SPRINKLER
PRV	PRESSURE REDUCING VALVE
RCV	RISER CONTROL VALVE
TS	TAMPER SWITCH
WF	WATERFLOW SWITCH

SPRINKLER DRAWING LIST

F-001	FIRE PROTECTION LEGEND, NOTES AND DETAILS
F-100	FIRE PROTECTION 10 DUNNIGAN DRIVE DEMOLITION FLOOR PLAN
F-101	FIRE PROTECTION 20 DUNNIGAN DRIVE DEMOLITION FLOOR PLAN
F-102	FIRE PROTECTION 20 DUNNIGAN DRIVE DEMOLITION FLOOR PLAN
F-103	FIRE PROTECTION L1 FLOOR PLAN QUADRANT 1
F-104	FIRE PROTECTION L1 FLOOR PLAN QUADRANT 2
F-105	FIRE PROTECTION L1 FLOOR PLAN QUADRANT 3
F-106	FIRE PROTECTION L1 FLOOR PLAN QUADRANT 4
F-107	FIRE PROTECTION L1 FLOOR PLAN QUADRANT 5
F-108	FIRE PROTECTION L1 FLOOR PLAN QUADRANT 6
F-109	FIRE PROTECTION L2 FLOOR PLAN
F-110	FIRE PROTECTION L3 FLOOR PLAN
F-111	FIRE PROTECTION L4 FLOOR PLAN
F-401	FIRE PROTECTION L1 FLOOR PART PLAN
F-402	FIRE PROTECTION L1 FLOOR ENLARGED PART PLAN
F-403	FIRE PROTECTION L3 ENLARGED PART PLAN
F-501	FIRE PROTECTION DETAILS
F-701	FIRE PROTECTION RISER DIAGRAM
F-801	FIRE PROTECTION SPECIFICATIONS
F-802	FIRE PROTECTION SPECIFICATIONS

TO THE BEST KNOWLEDGE, BELIEF AND PROFESSIONAL JUDGEMENT, THESE PLANS AND SPECIFICATIONS ARE IN COMPLIANCE WITH THE 2020 ENERGY CONSERVATION CONSTRUCTION CODE OF NEW YORK STATE.

ARCHITECT

di Domenico + Partners LLP

Architecture
Landscape Architecture
Planning

3743 Crescent Street, 3rd Floor
Long Island City, New York 11101
Tel 212-337-0400
Fax 212-337-3567

CIVIL PLANNING ENGINEER

JMC Planning Engineering Landscape Architecture & Land Surveying, PLLC
120 Bedford Road
Armonk, New York 10504
Tel 914-273-5225
Fax 914-273-2102

MEP ENGINEER

BURNS ENGINEERING, PC.
1261 Broadway, Suite 708
New York, New York 10001
Tel 212-962-3503

STRUCTURAL ENGINEER

GEI50
1385 Broadway, 20th FL
New York, New York 10018
Tel 212-687-8282

MANHATTAN BEER DISTRIBUTORS
20 DUNNIGAN DRIVE
SUFFERN, NEW YORK

KEY PLAN

REV	DESCRIPTION	DATE
	ISSUED FOR DOB SUBMISSION	09/10/2021
	ISSUED FOR BID	10/15/2021

DRAWN BY :	M.ESPINAL
CHECKED BY :	J.CLARK
APPROVED BY :	J.MIZRAHI
DATE :	04/16/21
SCALE :	NOT TO SCALE

DRAWING TITLE :

FIRE PROTECTION LEGEND AND NOTES

DWG NUMBER :

F-001

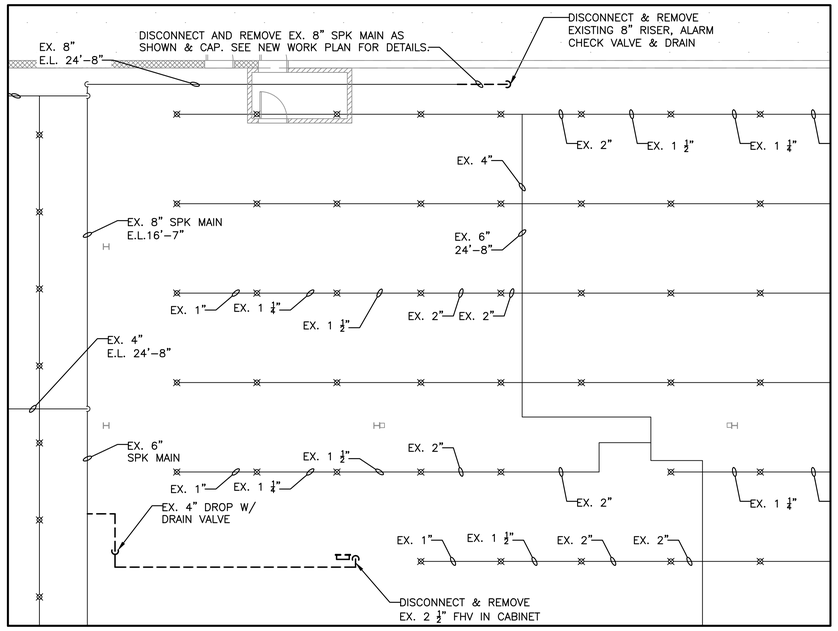

1 FP-100 1ST FLOOR DEMOLITION PART PLAN

SCALE: 1/8" = 1'-0"

DEMOLITION NOTES

1. PRIOR TO PROPOSAL SUBMISSION, THIS CONTRACTOR SHALL VISIT THE SITE TO REVIEW THE EXISTING CONDITIONS ASSOCIATED WITH THE SCOPE OF WORK AND ADJACENT AREAS TO ASCERTAIN THE DIFFICULTIES WHICH WILL AFFECT THE EXECUTION OF THE WORK OF THIS CONTRACT.
2. SUBMISSION OF A PROPOSAL WILL BE CONSTRUED AS EVIDENCE THAT THE ABOVE SITE EXAMINATION HAS BEEN MADE AND LATER CLAIMS WILL NOT BE RECOGNIZED FOR EXTRA LABOR, EQUIPMENT OR MATERIALS REQUIRED BECAUSE OF DIFFICULTIES ENCOUNTERED WHICH COULD HAVE BEEN FORESEEN HAD SUCH AN EXAMINATION BEEN MADE.
3. DEMOLITION WORK SHALL INCLUDE ALL MATERIALS, LABOR, EXTENSIONS, CONNECTIONS, CUTTING, REPAIRING, ADAPTING AND OTHER MECHANICAL WORK REQUIRED TO MAINTAIN SERVICE PENDING THE COMPLETION OF THE PERMANENT WORK. COORDINATE THE EXTENT OF DEMOLITION WORK WITH THE ARCHITECT AND BUILDING MANAGEMENT.
4. ALL EXISTING WORK REQUIRED TO REMAIN BUT INTERFERING WITH PROPOSED NEW FIRE PROTECTION (AS WELL AS ELECTRICAL, MECHANICAL AND GENERAL CONSTRUCTION WORK) SHALL BE RELOCATED AND RECONNECTED USING MATERIALS CONFORMING TO STANDARDS OF THIS CONTRACT.
5. IDENTIFY ALL PIPING BY SERVICE TYPE AND CAP AT MAINS.
6. CONTRACTOR TO CONTACT BUILDING MANAGEMENT AND TENANT REGARDING REMOVAL SCOPE OF WORK TO MAINTAIN CONTINUITY OF ALL SERVICES TO ALL TENANTS WHO ARE TO REMAIN OPERATIONAL AND NOT BE AFFECTED BY DEMOLITION WORK.
7. PROVIDE ADDITIONAL SUPPORT FOR ALL EXISTING PIPING TO REMAIN WHICH ARE AFFECTED BY DEMOLITION OF EXISTING CEILING AND PARTITIONS.
8. ALL MATERIALS AND EQUIPMENT SHALL BE DISPOSED OF IN ACCORDANCE WITH APPLICABLE LAWS AND ENVIRONMENTAL REGULATIONS.
9. WHEN EITHER THE FIRE STANDPIPE SYSTEM OR THE SPRINKLER SYSTEM IS TAKEN OUT OF SERVICE THE CONTRACTOR SHALL NOTIFY THE FIRE DEPARTMENT IMMEDIATELY AND A FIRE WATCH SHALL BE MAINTAINED BY ONE OR MORE PERSONS HOLDING A CERTIFICATE OF FITNESS FOR FIRE GUARD UNTIL THE FIRE PROTECTION SYSTEM HAS BEEN RETURNED TO SERVICE. FIRE GUARDS SHALL BE PROVIDED WITH AT LEAST ONE APPROVED MEANS FOR NOTIFICATION OF THE FIRE DEPARTMENT AND THEIR ONLY DUTY SHALL BE TO PERFORM CONSTANT PATROLS OF THE PROTECTED PREMISES AND KEEP WATCH FOR FIRE.

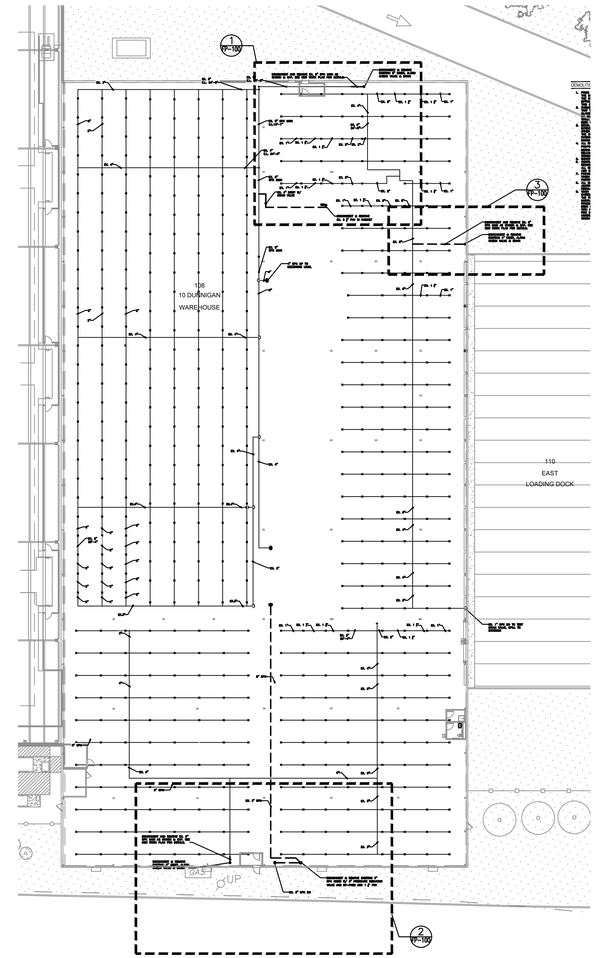

10 DUNNIGAN DEMOLITION KEY PLAN

SCALE: 1/32" = 1'-0"

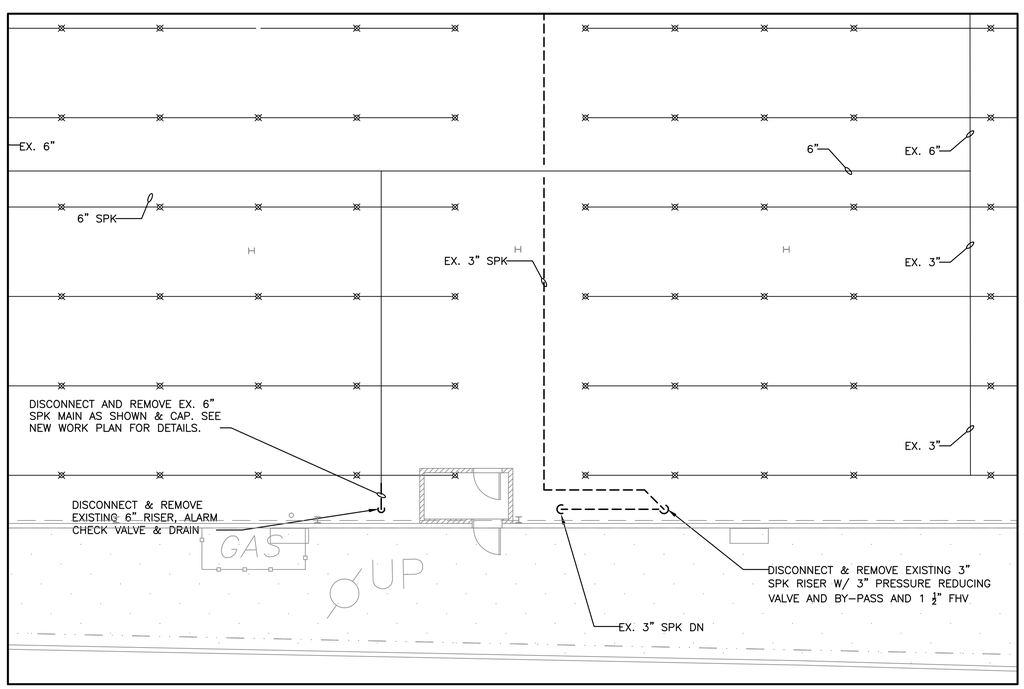

2 FP-100 1ST FLOOR DEMOLITION PART PLAN

SCALE: 1/8" = 1'-0"

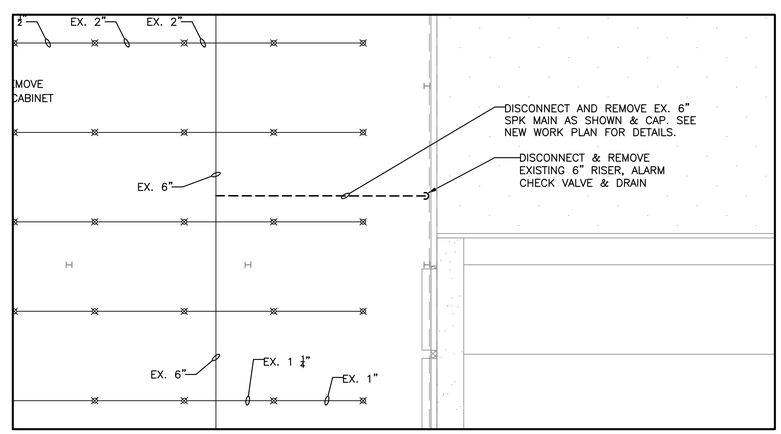

3 FP-100 1ST FLOOR DEMOLITION PART PLAN

SCALE: 1/8" = 1'-0"

ARCHITECT

di Domenico + Partners LLP

Architecture
Landscape Architecture
Planning

3743 Crescent Street, 3rd Floor
Long Island City, New York 11101
Tel 212-337-0400
Fax 212-337-3567

CIVIL PLANNING ENGINEER

JMC Planning Engineering Landscape Architecture & Land Surveying, PLLC
120 Bedford Road
Armonk, New York 10504
Tel 914-273-5225
Fax 914-273-2102

MEP ENGINEER

BURNS ENGINEERING, PC.
1261 Broadway, Suite 708
New York, New York 10001
Tel 212-962-3503

STRUCTURAL ENGINEER

GEI50
1385 Broadway, 20th FL
New York, New York 10018
Tel 212-687-8282

MANHATTAN BEER DISTRIBUTORS
20 DUNNIGAN DRIVE
SUFFERN, NEW YORK

KEY PLAN

REV	DESCRIPTION	DATE
	ISSUED FOR DOB SUBMISSION	09/10/2021
	ISSUED FOR BID	10/15/2021

DRAWN BY :	M.ESPINAL
CHECKED BY :	J.CLARK
APPROVED BY :	J.MIZRAHI
DATE :	04/16/21
SCALE :	SEE PLANS

DRAWING TITLE :

SPRINKLER 10 DUNNIGAN DEMOLITION PLAN

DWG NUMBER :

F-100

DEMOLITION NOTES 102

1. PRIOR TO PROPOSAL SUBMISSION, THIS CONTRACTOR SHALL VISIT THE SITE TO REVIEW THE EXISTING CONDITIONS ASSOCIATED WITH THE SCOPE OF WORK AND ADJACENT AREAS TO ASCERTAIN THE DIFFICULTIES WHICH WILL AFFECT THE EXECUTION OF THE WORK OF THIS CONTRACT.
2. SUBMISSION OF A PROPOSAL WILL BE CONSTRUED AS EVIDENCE THAT THE ABOVE SITE EXAMINATION HAS BEEN MADE AND LATER CLAIMS WILL NOT BE RECOGNIZED FOR EXTRA LABOR, EQUIPMENT OR MATERIALS REQUIRED BECAUSE OF DIFFICULTIES ENCOUNTERED WHICH COULD HAVE BEEN FORESEEN HAD SUCH AN EXAMINATION BEEN MADE.
3. DEMOLITION WORK SHALL INCLUDE ALL MATERIALS, LABOR, EXTENSIONS, CONNECTIONS, CUTTING, REPAIRING, ADAPTING AND OTHER MECHANICAL WORK REQUIRED TO MAINTAIN SERVICE PENDING THE COMPLETION OF THE PERMANENT WORK. COORDINATE THE EXTENT OF DEMOLITION WORK WITH THE ARCHITECT AND BUILDING MANAGEMENT.
4. ALL EXISTING WORK REQUIRED TO REMAIN BUT INTERFERING WITH PROPOSED NEW FIRE PROTECTION (AS WELL AS ELECTRICAL, MECHANICAL AND GENERAL CONSTRUCTION WORK) SHALL BE RELOCATED AND RECONNECTED USING MATERIALS CONFORMING TO STANDARDS OF THIS CONTRACT.
5. IDENTIFY ALL PIPING BY SERVICE TYPE AND CAP AT MAINS.
6. CONTRACTOR TO CONTACT BUILDING MANAGEMENT AND TENANT REGARDING REMOVAL SCOPE OF WORK TO MAINTAIN CONTINUITY OF ALL SERVICES TO ALL TENANTS WHO ARE TO REMAIN OPERATIONAL AND NOT BE AFFECTED BY DEMOLITION WORK.
7. PROVIDE ADDITIONAL SUPPORT FOR ALL EXISTING PIPING TO REMAIN WHICH ARE AFFECTED BY DEMOLITION OF EXISTING CEILING AND PARTITIONS.
8. ALL MATERIALS AND EQUIPMENT SHALL BE DISPOSED OF IN ACCORDANCE WITH APPLICABLE LAWS AND ENVIRONMENTAL REGULATIONS.
9. WHEN EITHER THE FIRE STANDPIPE SYSTEM OR THE SPRINKLER SYSTEM IS TAKEN OUT OF SERVICE THE CONTRACTOR SHALL NOTIFY THE FIRE DEPARTMENT IMMEDIATELY AND A FIRE WATCH SHALL BE MAINTAINED BY ONE OR MORE PERSONS HOLDING A CERTIFICATE OF FITNESS FOR FIRE GUARD UNTIL THE FIRE PROTECTION SYSTEM HAS BEEN RETURNED TO SERVICE. FIRE GUARDS SHALL BE PROVIDED WITH AT LEAST ONE APPROVED MEANS FOR NOTIFICATION OF THE FIRE DEPARTMENT AND THEIR ONLY DUTY SHALL BE TO PERFORM CONSTANT PATROLS OF THE PROTECTED PREMISES AND KEEP WATCH FOR FIRE.

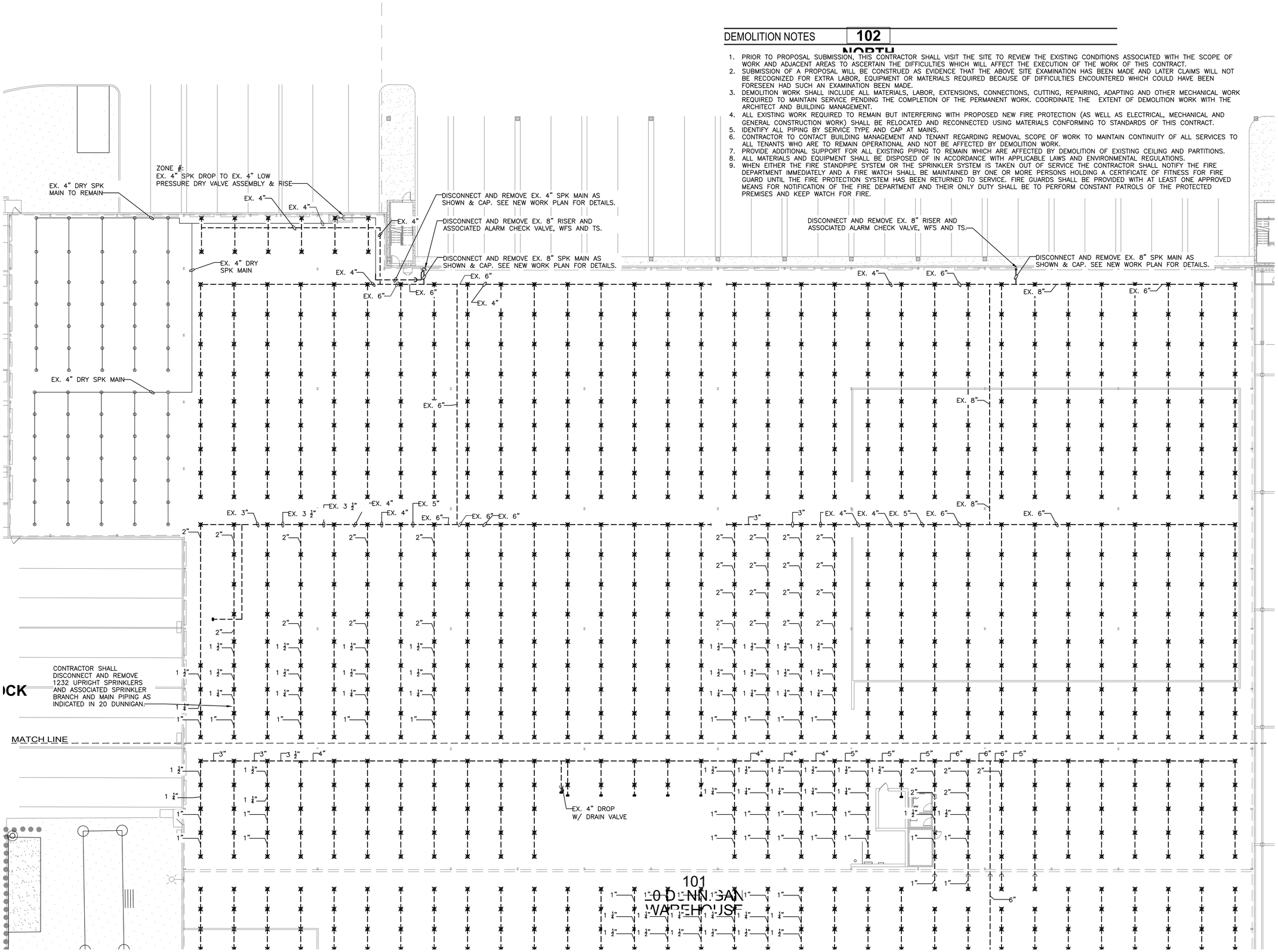

ARCHITECT
di Domenico + Partners LLP
Architecture
Landscape Architecture
Planning
3743 Crescent Street, 3rd Floor
Long Island City, New York 11101
Tel 212-337-0400
Fax 212-337-3567

CIVIL PLANNING ENGINEER
JMC Planning Engineering Landscape Architecture & Land Surveying, PLLC
120 Bedford Road
Armonk, New York 10504
Tel 914-273-5225
Fax 914-273-2102

MEP ENGINEER
BURNS ENGINEERING, PC.
1261 Broadway, Suite 708
New York, New York 10001
Tel 212-962-3503

STRUCTURAL ENGINEER
GEI50
1385 Broadway, 20th FL
New York, New York 10018
Tel 212-687-8282

MANHATTAN BEER DISTRIBUTORS
20 DUNNIGAN DRIVE
SUFFERN, NEW YORK

KEY PLAN

REV	DESCRIPTION	DATE
	ISSUED FOR DOB SUBMISSION	09/10/2021
	ISSUED FOR BID	10/15/2021

DRAWN BY :	M.ESPINAL
CHECKED BY :	J.CLARK
APPROVED BY :	J.MIZRAHI
DATE :	04/16/21
SCALE :	1/16" = 1'-0"

DRAWING TITLE :

SPRINKLER 20 DUNNIGAN NORTH FLOOR PLAN

DWG NUMBER :

F-102

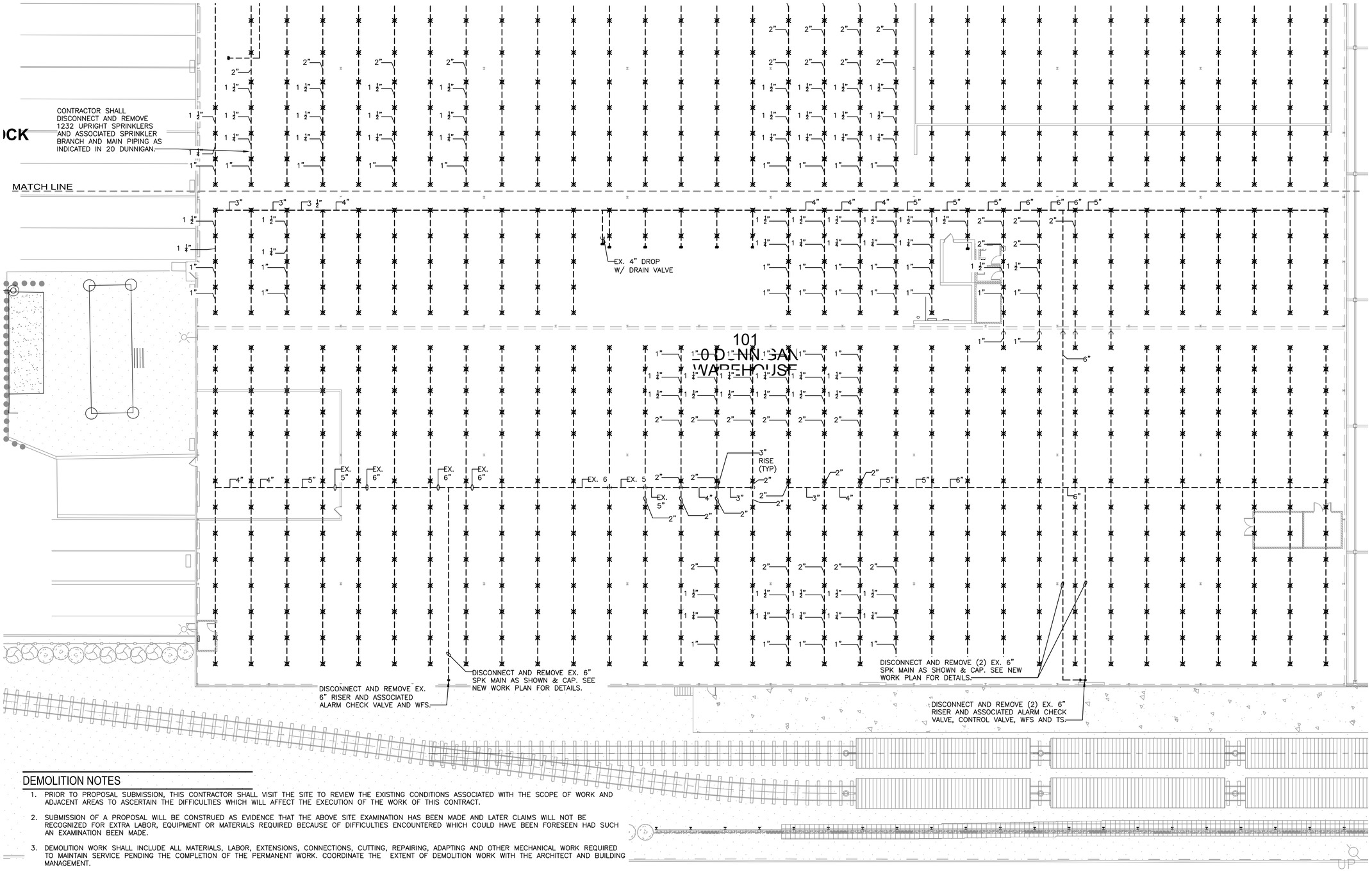

DEMOLITION NOTES

1. PRIOR TO PROPOSAL SUBMISSION, THIS CONTRACTOR SHALL VISIT THE SITE TO REVIEW THE EXISTING CONDITIONS ASSOCIATED WITH THE SCOPE OF WORK AND ADJACENT AREAS TO ASCERTAIN THE DIFFICULTIES WHICH WILL AFFECT THE EXECUTION OF THE WORK OF THIS CONTRACT.
2. SUBMISSION OF A PROPOSAL WILL BE CONSTRUED AS EVIDENCE THAT THE ABOVE SITE EXAMINATION HAS BEEN MADE AND LATER CLAIMS WILL NOT BE RECOGNIZED FOR EXTRA LABOR, EQUIPMENT OR MATERIALS REQUIRED BECAUSE OF DIFFICULTIES ENCOUNTERED WHICH COULD HAVE BEEN FORESEEN HAD SUCH AN EXAMINATION BEEN MADE.
3. DEMOLITION WORK SHALL INCLUDE ALL MATERIALS, LABOR, EXTENSIONS, CONNECTIONS, CUTTING, REPAIRING, ADAPTING AND OTHER MECHANICAL WORK REQUIRED TO MAINTAIN SERVICE PENDING THE COMPLETION OF THE PERMANENT WORK. COORDINATE THE EXTENT OF DEMOLITION WORK WITH THE ARCHITECT AND BUILDING MANAGEMENT.
4. ALL EXISTING WORK REQUIRED TO REMAIN BUT INTERFERING WITH PROPOSED NEW FIRE PROTECTION (AS WELL AS ELECTRICAL, MECHANICAL AND GENERAL CONSTRUCTION WORK) SHALL BE RELOCATED AND RECONNECTED USING MATERIALS CONFORMING TO STANDARDS OF THIS CONTRACT.
5. IDENTIFY ALL PIPING BY SERVICE TYPE AND CAP AT MAINS.
6. CONTRACTOR TO CONTACT BUILDING MANAGEMENT AND TENANT REGARDING REMOVAL SCOPE OF WORK TO MAINTAIN CONTINUITY OF ALL SERVICES TO ALL TENANTS WHO ARE TO REMAIN OPERATIONAL AND NOT BE AFFECTED BY DEMOLITION WORK.
7. PROVIDE ADDITIONAL SUPPORT FOR ALL EXISTING PIPING TO REMAIN WHICH ARE AFFECTED BY DEMOLITION OF EXISTING CEILING AND PARTITIONS.
8. ALL MATERIALS AND EQUIPMENT SHALL BE DISPOSED OF IN ACCORDANCE WITH APPLICABLE LAWS AND ENVIRONMENTAL REGULATIONS.
9. WHEN EITHER THE FIRE STANDPIPE SYSTEM OR THE SPRINKLER SYSTEM IS TAKEN OUT OF SERVICE THE CONTRACTOR SHALL NOTIFY THE FIRE DEPARTMENT IMMEDIATELY AND A FIRE WATCH SHALL BE MAINTAINED BY ONE OR MORE PERSONS HOLDING A CERTIFICATE OF FITNESS FOR FIRE GUARD UNTIL THE FIRE PROTECTION SYSTEM HAS BEEN RETURNED TO SERVICE. FIRE GUARDS SHALL BE PROVIDED WITH AT LEAST ONE APPROVED MEANS FOR NOTIFICATION OF THE FIRE DEPARTMENT AND THEIR ONLY DUTY SHALL BE TO PERFORM CONSTANT PATROLS OF THE PROTECTED PREMISES AND KEEP WATCH FOR FIRE.

ARCHITECT

di Domenico + Partners LLP
Architecture
Landscape Architecture
Planning
3743 Crescent Street, 3rd Floor
Long Island City, New York 11101
Tel 212-337-0400
Fax 212-337-3567

CIVIL PLANNING ENGINEER

JMC Planning Engineering Landscape Architecture & Land Surveying, PLLC
120 Bedford Road
Armonk, New York 10504
Tel 914-273-5225
Fax 914-273-2102

MEP ENGINEER

BURNS ENGINEERING, PC.
1261 Broadway, Suite 708
New York, New York 10001
Tel 212-962-3503

STRUCTURAL ENGINEER

GEI50
1385 Broadway, 20th FL
New York, New York 10018
Tel 212-687-8282

MANHATTAN BEER DISTRIBUTORS
20 DUNNIGAN DRIVE
SUFFERN, NEW YORK

KEY PLAN

REV	DESCRIPTION	DATE
	ISSUED FOR DOB SUBMISSION	09/10/2021
	ISSUED FOR BID	10/15/2021

DRAWN BY :	M.ESPINAL
CHECKED BY :	J.CLARK
APPROVED BY :	J.MIZRAHI
DATE :	04/16/21
SCALE :	1/16" = 1'-0"

DRAWING TITLE :

FIRE PROTECTION 20 DUNNIGAN SOUTH DEMOLITION PLAN

DWG NUMBER :

F-101

HYDRAULIC NOTES:

1) PIPES SIZES SHOWN ARE BASED ON DESIGN PIPING LAYOUTS ONLY. ACTUAL PIPE SIZES SHALL BE DETERMINED BY CONTRACTORS HYDRAULIC CALCULATIONS BASED ON HIS INSTALLATION DRAWINGS. CONTRACTOR SHALL ALLOW FOR THIS AND INCLUDE THIS IN HIS CONTRACT PRICE.

2) HYDRAULIC DESIGN DATA/CRITERIA AREA #7:
ORDINARY HAZARD, GROUP 2
K-FACTOR: 5.6
NUMBER OF FLOWING SPRINKLERS: 12
DENSITY: 0.20 G.P.M
REMOTE AREA: 1500 SQ. FT

SPRINKLER NOTES

1) CONTRACTOR SHALL COORDINATE WITH THE BUILDING THE SHUT DOWN OF THE FIRE STANDPIPE/SPRINKLER RISERS.

2) CONTRACTOR SHALL COORDINATE ROUTING OF NEW SPRINKLER PIPING WITH THE PROPOSED STRUCTURE AND ALL TRADES TO AVOID CONFLICTS.

3) DESIGN DRAWINGS ARE SCHEMATIC. PIPING IS SHOWN APPROXIMATELY ONLY. EXACT LOCATION MUST BE DETERMINED BY THE SPRINKLER CONTRACTOR IN THE FIELD. CONTRACTOR SHALL VISIT THE SITE PRIOR TO BIDDING OR AWARD OF CONTACT TO INSPECT EXISTING FIELD CONDITIONS. THIS CONTRACT SHALL INCLUDE ALL LABOR AND MATERIALS NECESSARY FOR FIELD MODIFICATIONS DUE TO EXISTING CONDITIONS.

4) THE CONTRACTOR SHALL CONTACT THE ARCHITECT, ENGINEER OR OWNER PRIOR TO BIDDING FOR INTERPRETATIONS AND CLARIFICATIONS OF THE DESIGN AND INCLUDE IN HIS BID ALL COSTS TO MEET THE DESIGN INTENT. CLARIFICATIONS MADE BY THE ARCHITECT, ENGINEER OR OWNER AFTER BIDDING WILL BE FINAL AND SHALL BE IMPLEMENTED AT CONTRACTORS COST.

5) BIDDING CONTRACTORS SHALL HAVE A WORKING KNOWLEDGE OF LOCAL CODES AND ORDINANCES AND SHALL INCLUDE IN THEIR BIDS THE COSTS FOR ALL WORK INSTALLED IN STRICT ACCORDANCE WITH GOVERNING CODES. THE PLANS AND SPECIFICATIONS NOT WITHSTANDING. THE CONTRACTOR SHALL ALERT ARCHITECT, ENGINEER OR OWNER OF ANY APPARENT DISCREPANCIES BETWEEN GOVERNING CODES AND DESIGN INTENT.

6) PROVIDE SPRINKLER HEADS BELOW ALL EXPOSED OBSTRUCTIONS OVER 48" WIDE. THIS REQUIREMENT SHALL INCLUDE DUCT WORK RUNNING PARALLEL OF EACH OTHER PRODUCING A WIDTH OF 48" AND OVER. SPRINKLER HEAD INSTALLED WHERE MINIMUM HEAD CLEARANCE IS NOT MET SHALL BE EQUIPPED WITH WIRE GUARD COVERS.

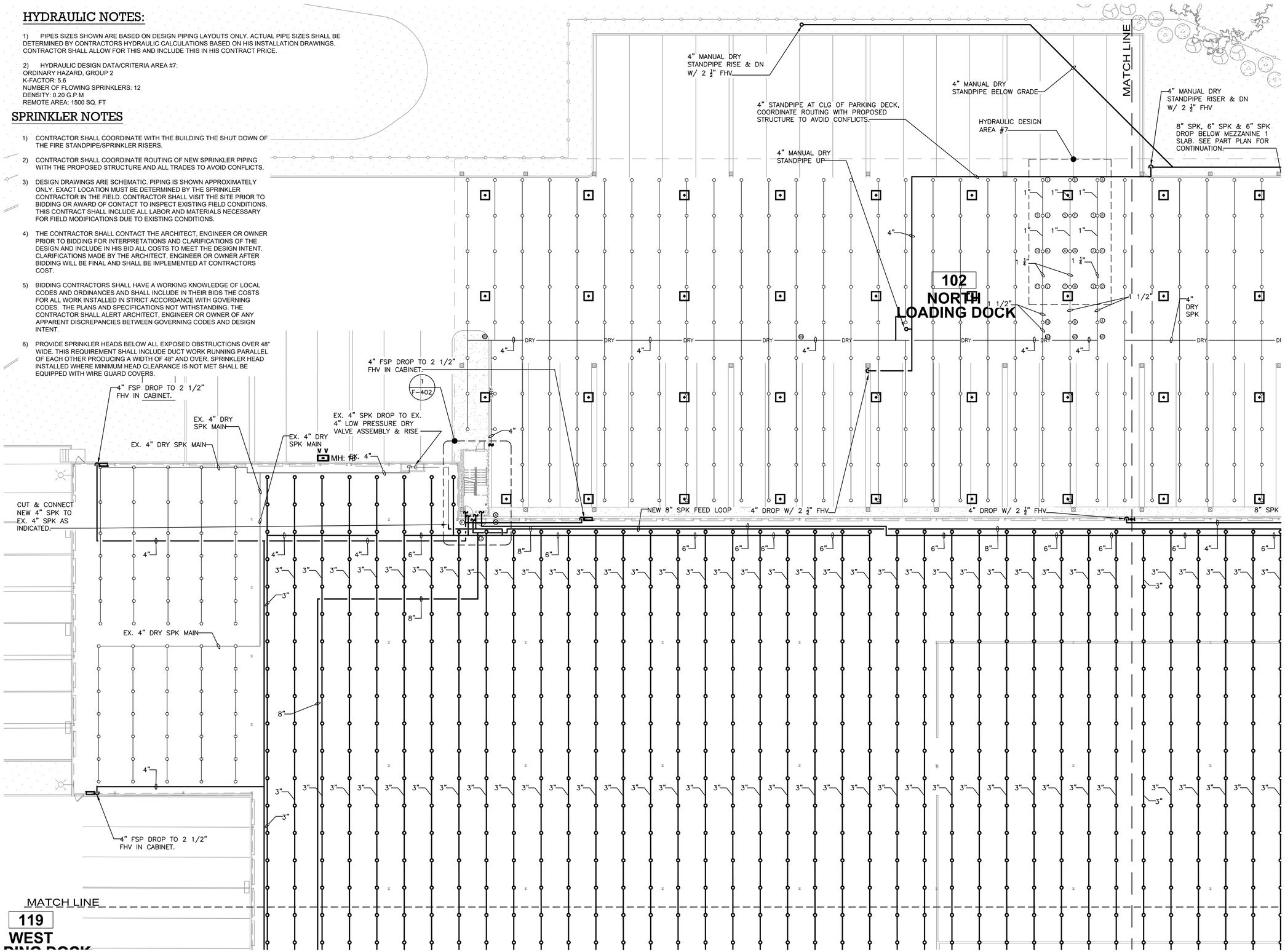

ARCHITECT
di Domenico + Partners LLP
Architecture
Landscape Architecture
Planning
3743 Crescent Street, 3rd Floor
Long Island City, New York 11101
Tel 212-337-0400
Fax 212-337-3567

CIVIL PLANNING ENGINEER
JMC Planning Engineering Landscape Architecture & Land Surveying, PLLC
120 Bedford Road
Armonk, New York 10504
Tel 914-273-5225
Fax 914-273-2102

MEP ENGINEER
BURNS ENGINEERING, PC.
1261 Broadway, Suite 708
New York, New York 10001
Tel 212-962-3503

STRUCTURAL ENGINEER
GEI50
1385 Broadway, 20th FL
New York, New York 10018
Tel 212-687-8282

MANHATTAN BEER DISTRIBUTORS
20 DUNNIGAN DRIVE
SUFFERN, NEW YORK

KEY PLAN

REV	DESCRIPTION	DATE
	ISSUED FOR DOB SUBMISSION	09/10/2021
	ISSUED FOR BID	10/15/2021

DRAWN BY :	M.ESPINAL
CHECKED BY :	J.CLARK
APPROVED BY :	J.MIZRAHI
DATE :	04/16/21
SCALE :	1/16" = 1'-0"

DRAWING TITLE :

FIRE PROTECTION L1 FLOOR PLAN QUADRANT 1

DWG NUMBER :

F-103

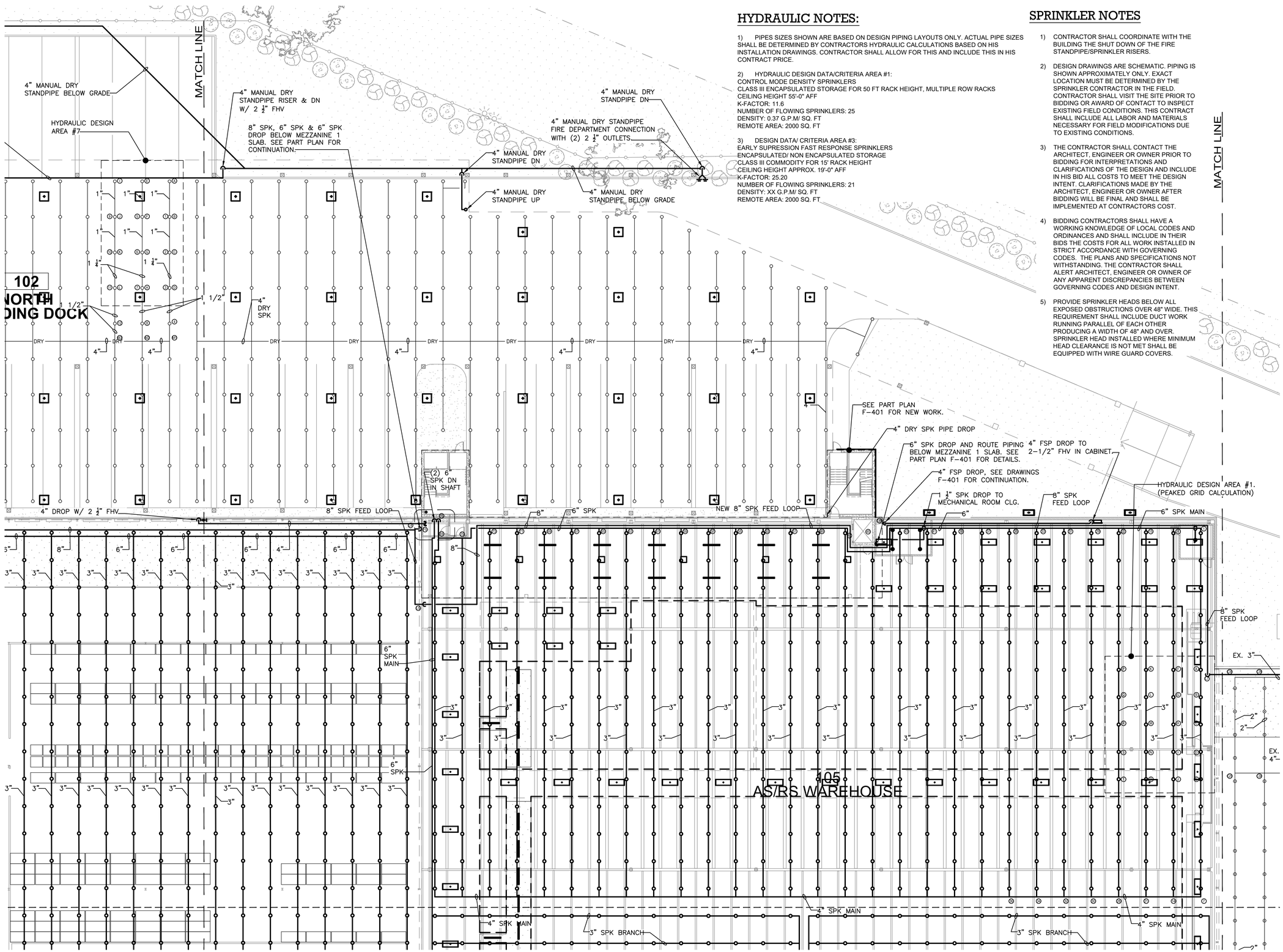

HYDRAULIC NOTES:

1) PIPES SIZES SHOWN ARE BASED ON DESIGN PIPING LAYOUTS ONLY. ACTUAL PIPE SIZES SHALL BE DETERMINED BY CONTRACTORS HYDRAULIC CALCULATIONS BASED ON HIS INSTALLATION DRAWINGS. CONTRACTOR SHALL ALLOW FOR THIS AND INCLUDE THIS IN HIS CONTRACT PRICE.

2) HYDRAULIC DESIGN DATA/CRITERIA AREA #1:
CONTROL MODE DENSITY SPRINKLERS
CLASS III ENCAPSULATED STORAGE FOR 50 FT RACK HEIGHT, MULTIPLE ROW RACKS
CEILING HEIGHT 55'-0" AFF
K-FACTOR: 11.6
NUMBER OF FLOWING SPRINKLERS: 25
DENSITY: 0.37 G.P.M/ SQ. FT
REMOTE AREA: 2000 SQ. FT

3) DESIGN DATA/ CRITERIA AREA #3:
EARLY SUPRESSION FAST RESPONSE SPRINKLERS
ENCAPSULATED/ NON ENCAPSULATED STORAGE
CLASS III COMMODITY FOR 15' RACK HEIGHT
CEILING HEIGHT APPROX. 19'-0" AFF
K-FACTOR: 25.20
NUMBER OF FLOWING SPRINKLERS: 21
DENSITY: XX G.P.M/ SQ. FT
REMOTE AREA: 2000 SQ. FT

SPRINKLER NOTES

1) CONTRACTOR SHALL COORDINATE WITH THE BUILDING THE SHUT DOWN OF THE FIRE STANDPIPE/SPRINKLER RISERS.

2) DESIGN DRAWINGS ARE SCHEMATIC. PIPING IS SHOWN APPROXIMATELY ONLY. EXACT LOCATION MUST BE DETERMINED BY THE SPRINKLER CONTRACTOR IN THE FIELD. CONTRACTOR SHALL VISIT THE SITE PRIOR TO BIDDING OR AWARD OF CONTACT TO INSPECT EXISTING FIELD CONDITIONS. THIS CONTRACT SHALL INCLUDE ALL LABOR AND MATERIALS NECESSARY FOR FIELD MODIFICATIONS DUE TO EXISTING CONDITIONS.

3) THE CONTRACTOR SHALL CONTACT THE ARCHITECT, ENGINEER OR OWNER PRIOR TO BIDDING FOR INTERPRETATIONS AND CLARIFICATIONS OF THE DESIGN AND INCLUDE IN HIS BID ALL COSTS TO MEET THE DESIGN INTENT. CLARIFICATIONS MADE BY THE ARCHITECT, ENGINEER OR OWNER AFTER BIDDING WILL BE FINAL AND SHALL BE IMPLEMENTED AT CONTRACTORS COST.

4) BIDDING CONTRACTORS SHALL HAVE A WORKING KNOWLEDGE OF LOCAL CODES AND ORDINANCES AND SHALL INCLUDE IN THEIR BIDS THE COSTS FOR ALL WORK INSTALLED IN STRICT ACCORDANCE WITH GOVERNING CODES. THE PLANS AND SPECIFICATIONS NOT WITHSTANDING. THE CONTRACTOR SHALL ALERT ARCHITECT, ENGINEER OR OWNER OF ANY APPARENT DISCREPANCIES BETWEEN GOVERNING CODES AND DESIGN INTENT.

5) PROVIDE SPRINKLER HEADS BELOW ALL EXPOSED OBSTRUCTIONS OVER 48" WIDE. THIS REQUIREMENT SHALL INCLUDE DUCT WORK RUNNING PARALLEL OF EACH OTHER PRODUCING A WIDTH OF 48" AND OVER. SPRINKLER HEAD INSTALLED WHERE MINIMUM HEAD CLEARANCE IS NOT MET SHALL BE EQUIPPED WITH WIRE GUARD COVERS.

ARCHITECT
di Domenico + Partners LLP
Architecture
Landscape Architecture
Planning
3743 Crescent Street, 3rd Floor
Long Island City, New York 11101
Tel 212-337-0400
Fax 212-337-3567

CIVIL PLANNING ENGINEER
JMC Planning Engineering Landscape Architecture & Land Surveying, PLLC
120 Bedford Road
Armonk, New York 10504
Tel 914-273-5225
Fax 914-273-2102

MEP ENGINEER
BURNS ENGINEERING, PC.
1261 Broadway, Suite 708
New York, New York 10001
Tel 212-962-3503

STRUCTURAL ENGINEER
GEI50
1385 Broadway, 20th FL
New York, New York 10018
Tel 212-687-8282

MANHATTAN BEER DISTRIBUTORS
20 DUNNIGAN DRIVE
SUFFERN, NEW YORK

KEY PLAN

REV	DESCRIPTION	DATE
	ISSUED FOR DOB SUBMISSION	09/10/2021
	ISSUED FOR BID	10/15/2021

DRAWN BY :	M.ESPINAL
CHECKED BY :	J.CLARK
APPROVED BY :	J.MIZRAHI
DATE :	04/16/21
SCALE :	1/16" = 1'-0"

DRAWING TITLE :

FIRE PROTECTION L1 FLOOR PLAN QUADRANT 2

DWG NUMBER :

F-104

HYDRAULIC NOTES:

1) PIPES SIZES SHOWN ARE BASED ON DESIGN PIPING LAYOUTS ONLY. ACTUAL PIPE SIZES SHALL BE DETERMINED BY CONTRACTORS HYDRAULIC CALCULATIONS BASED ON HIS INSTALLATION DRAWINGS. CONTRACTOR SHALL ALLOW FOR THIS AND INCLUDE THIS IN HIS CONTRACT PRICE.

2) HYDRAULIC DESIGN DATA/CRITERIA AREA #1:
CONTROL MODE DENSITY SPRINKLERS
CLASS III ENCAPSULATED STORAGE FOR 50 FT RACK HEIGHT, MULTIPLE ROW RACKS
CEILING HEIGHT 55'-0" AFF
K-FACTOR: 11.6
NUMBER OF FLOWING SPRINKLERS: 25
DENSITY: 0.37 G.P.M/ SQ. FT
REMOTE AREA: 2000 SQ. FT

3) DESIGN DATA/ CRITERIA AREA #3:
EARLY SUPRESSION FAST RESPONSE SPRINKLERS
ENCAPSULATED/ NON ENCAPSULATED STORAGE
CLASS III COMMODITY FOR 15' RACK HEIGHT
CEILING HEIGHT APPROX. 19'-0" AFF
K-FACTOR: 25.20
NUMBER OF FLOWING SPRINKLERS: 21
DENSITY: XX G.P.M/ SQ. FT
REMOTE AREA: 2000 SQ. FT

SPRINKLER NOTES

1) CONTRACTOR SHALL COORDINATE WITH THE BUILDING THE SHUT DOWN OF THE FIRE STANDPIPE/SPRINKLER RISERS.

2) DESIGN DRAWINGS ARE SCHEMATIC. PIPING IS SHOWN APPROXIMATELY ONLY. EXACT LOCATION MUST BE DETERMINED BY THE SPRINKLER CONTRACTOR IN THE FIELD. CONTRACTOR SHALL VISIT THE SITE PRIOR TO BIDDING OR AWARD OF CONTACT TO INSPECT EXISTING FIELD CONDITIONS. THIS CONTRACT SHALL INCLUDE ALL LABOR AND MATERIALS NECESSARY FOR FIELD MODIFICATIONS DUE TO EXISTING CONDITIONS.

3) THE CONTRACTOR SHALL CONTACT THE ARCHITECT, ENGINEER OR OWNER PRIOR TO BIDDING FOR INTERPRETATIONS AND CLARIFICATIONS OF THE DESIGN AND INCLUDE IN HIS BID ALL COSTS TO MEET THE DESIGN INTENT. CLARIFICATIONS MADE BY THE ARCHITECT, ENGINEER OR OWNER AFTER BIDDING WILL BE FINAL AND SHALL BE IMPLEMENTED AT CONTRACTORS COST.

4) BIDDING CONTRACTORS SHALL HAVE A WORKING KNOWLEDGE OF LOCAL CODES AND ORDINANCES AND SHALL INCLUDE IN THEIR BIDS THE COSTS FOR ALL WORK INSTALLED IN STRICT ACCORDANCE WITH GOVERNING CODES. THE PLANS AND SPECIFICATIONS NOT WITHSTANDING. THE CONTRACTOR SHALL ALERT ARCHITECT, ENGINEER OR OWNER OF ANY APPARENT DISCREPANCIES BETWEEN GOVERNING CODES AND DESIGN INTENT.

5) PROVIDE SPRINKLER HEADS BELOW ALL EXPOSED OBSTRUCTIONS OVER 48" WIDE. THIS REQUIREMENT SHALL INCLUDE DUCT WORK RUNNING PARALLEL OF EACH OTHER PRODUCING A WIDTH OF 48" AND OVER. SPRINKLER HEAD INSTALLED WHERE MINIMUM HEAD CLEARANCE IS NOT MET SHALL BE EQUIPPED WITH WIRE GUARD COVERS.

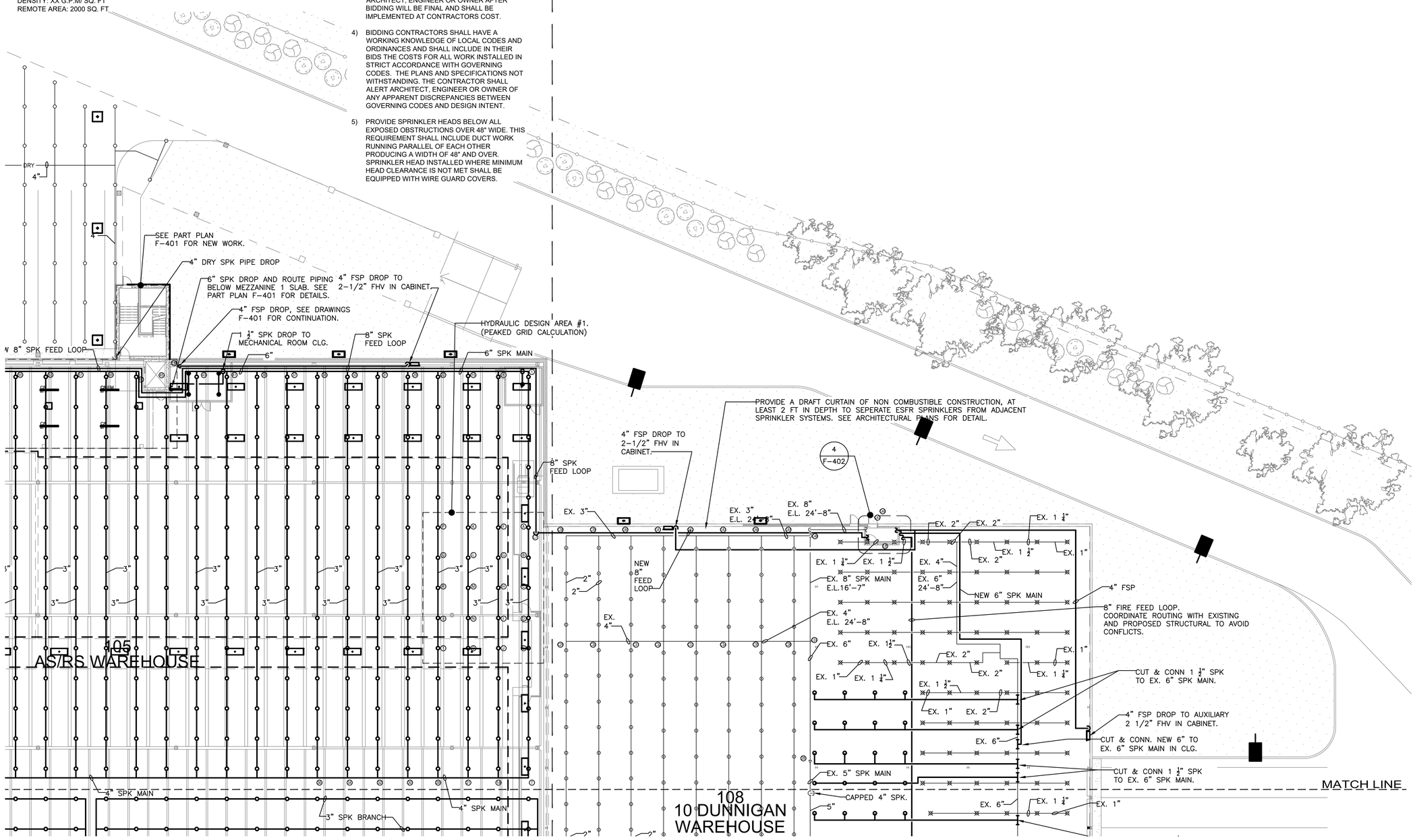

ARCHITECT
di Domenico + Partners LLP
Architecture
Landscape Architecture
Planning
3743 Crescent Street, 3rd Floor
Long Island City, New York 11101
Tel 212-337-0400
Fax 212-337-3567

CIVIL PLANNING ENGINEER
JMC Planning Engineering Landscape Architecture & Land Surveying, PLLC
120 Bedford Road
Armonk, New York 10504
Tel 914-273-5225
Fax 914-273-2102

MEP ENGINEER
BURNS ENGINEERING, PC.
1261 Broadway, Suite 708
New York, New York 10001
Tel 212-962-3503

STRUCTURAL ENGINEER
GEI50
1385 Broadway, 20th FL
New York, New York 10018
Tel 212-687-8282

MANHATTAN BEER DISTRIBUTORS
20 DUNNIGAN DRIVE
SUFFERN, NEW YORK

KEY PLAN

REV	DESCRIPTION	DATE
	ISSUED FOR DOB SUBMISSION	09/10/2021
	ISSUED FOR BID	10/15/2021

DRAWN BY :	M.ESPINAL
CHECKED BY :	J.CLARK
APPROVED BY :	J.MIZRAHI
DATE :	04/16/21
SCALE :	1/16" = 1'-0"

DRAWING TITLE :

FIRE PROTECTION L1 PLAN
QUADRANT 3

DWG NUMBER :

F-105

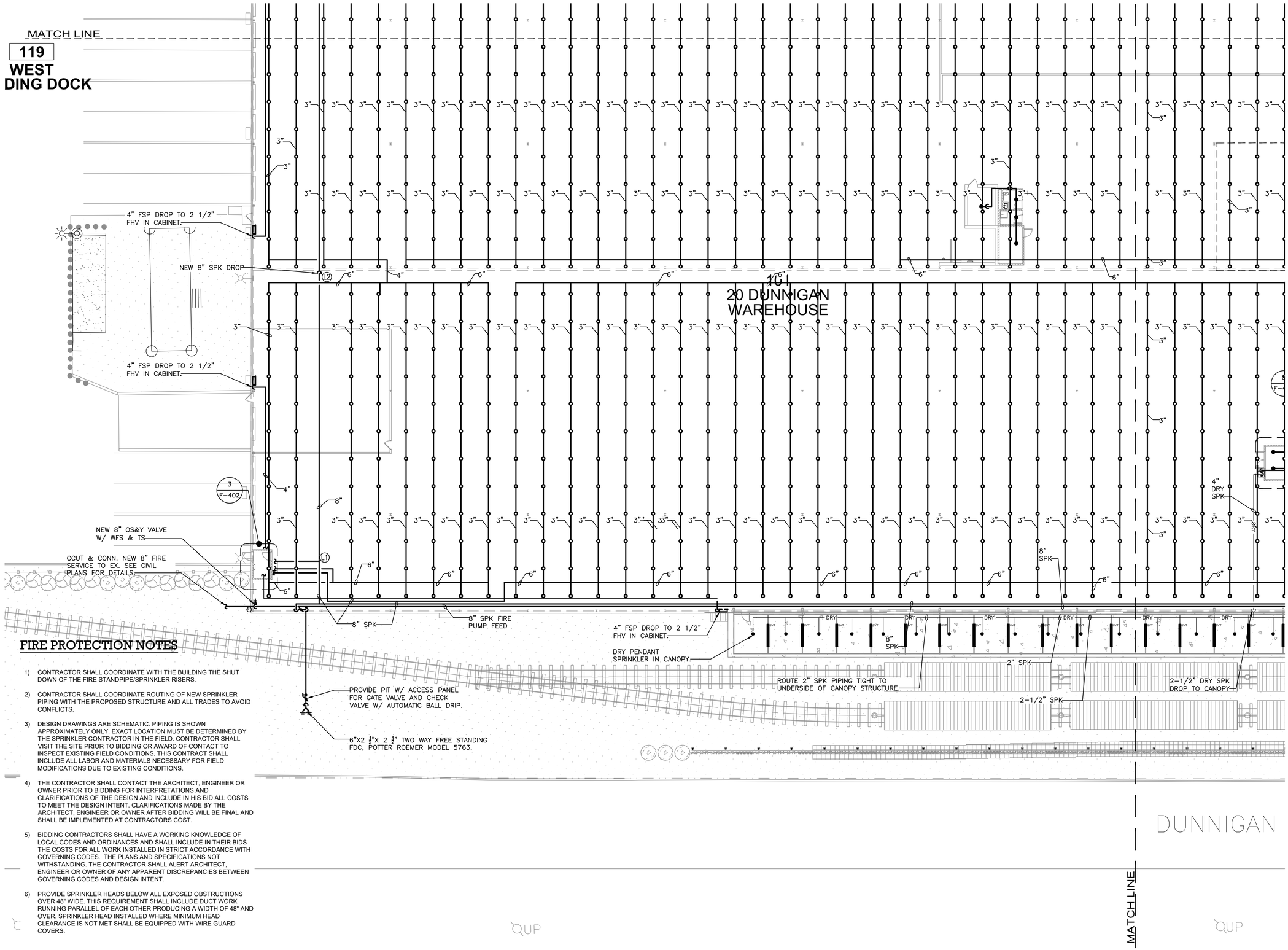

FIRE PROTECTION NOTES

1) CONTRACTOR SHALL COORDINATE WITH THE BUILDING THE SHUT DOWN OF THE FIRE STANDPIPE/SPRINKLER RISERS.

2) CONTRACTOR SHALL COORDINATE ROUTING OF NEW SPRINKLER PIPING WITH THE PROPOSED STRUCTURE AND ALL TRADES TO AVOID CONFLICTS.

3) DESIGN DRAWINGS ARE SCHEMATIC. PIPING IS SHOWN APPROXIMATELY ONLY. EXACT LOCATION MUST BE DETERMINED BY THE SPRINKLER CONTRACTOR IN THE FIELD. CONTRACTOR SHALL VISIT THE SITE PRIOR TO BIDDING OR AWARD OF CONTACT TO INSPECT EXISTING FIELD CONDITIONS. THIS CONTRACT SHALL INCLUDE ALL LABOR AND MATERIALS NECESSARY FOR FIELD MODIFICATIONS DUE TO EXISTING CONDITIONS.

4) THE CONTRACTOR SHALL CONTACT THE ARCHITECT, ENGINEER OR OWNER PRIOR TO BIDDING FOR INTERPRETATIONS AND CLARIFICATIONS OF THE DESIGN AND INCLUDE IN HIS BID ALL COSTS TO MEET THE DESIGN INTENT. CLARIFICATIONS MADE BY THE ARCHITECT, ENGINEER OR OWNER AFTER BIDDING WILL BE FINAL AND SHALL BE IMPLEMENTED AT CONTRACTORS COST.

5) BIDDING CONTRACTORS SHALL HAVE A WORKING KNOWLEDGE OF LOCAL CODES AND ORDINANCES AND SHALL INCLUDE IN THEIR BIDS THE COSTS FOR ALL WORK INSTALLED IN STRICT ACCORDANCE WITH GOVERNING CODES. THE PLANS AND SPECIFICATIONS NOT WITHSTANDING. THE CONTRACTOR SHALL ALERT ARCHITECT, ENGINEER OR OWNER OF ANY APPARENT DISCREPANCIES BETWEEN GOVERNING CODES AND DESIGN INTENT.

6) PROVIDE SPRINKLER HEADS BELOW ALL EXPOSED OBSTRUCTIONS OVER 48" WIDE. THIS REQUIREMENT SHALL INCLUDE DUCT WORK RUNNING PARALLEL OF EACH OTHER PRODUCING A WIDTH OF 48" AND OVER. SPRINKLER HEAD INSTALLED WHERE MINIMUM HEAD CLEARANCE IS NOT MET SHALL BE EQUIPPED WITH WIRE GUARD COVERS.

ARCHITECT

di Domenico + Partners LLP

Architecture
Landscape Architecture
Planning

3743 Crescent Street, 3rd Floor
Long Island City, New York 11101
Tel 212-337-0400
Fax 212-337-3567

CIVIL PLANNING ENGINEER

JMC Planning Engineering Landscape Architecture & Land Surveying, PLLC
120 Bedford Road
Armonk, New York 10504
Tel 914-273-5225
Fax 914-273-2102

MEP ENGINEER

BURNS ENGINEERING, PC.
1261 Broadway, Suite 708
New York, New York 10001
Tel 212-962-3503

STRUCTURAL ENGINEER

GEI50
1385 Broadway, 20th FL
New York, New York 10018
Tel 212-687-8282

MANHATTAN BEER DISTRIBUTORS

MANHATTAN BEER DISTRIBUTORS
20 DUNNIGAN DRIVE
SUFFERN, NEW YORK

KEY PLAN

REV	DESCRIPTION	DATE
	ISSUED FOR DOB SUBMISSION	09/10/2021
	ISSUED FOR BID	10/15/2021

DRAWN BY :	M.ESPINAL
CHECKED BY :	J.CLARK
APPROVED BY :	J.MIZRAHI
DATE :	04/16/21
SCALE :	1/16" = 1'-0"

DRAWING TITLE :

FIRE PROTECTION L1 FLOOR PLAN QUADRANT 4

DWG NUMBER :

F-106

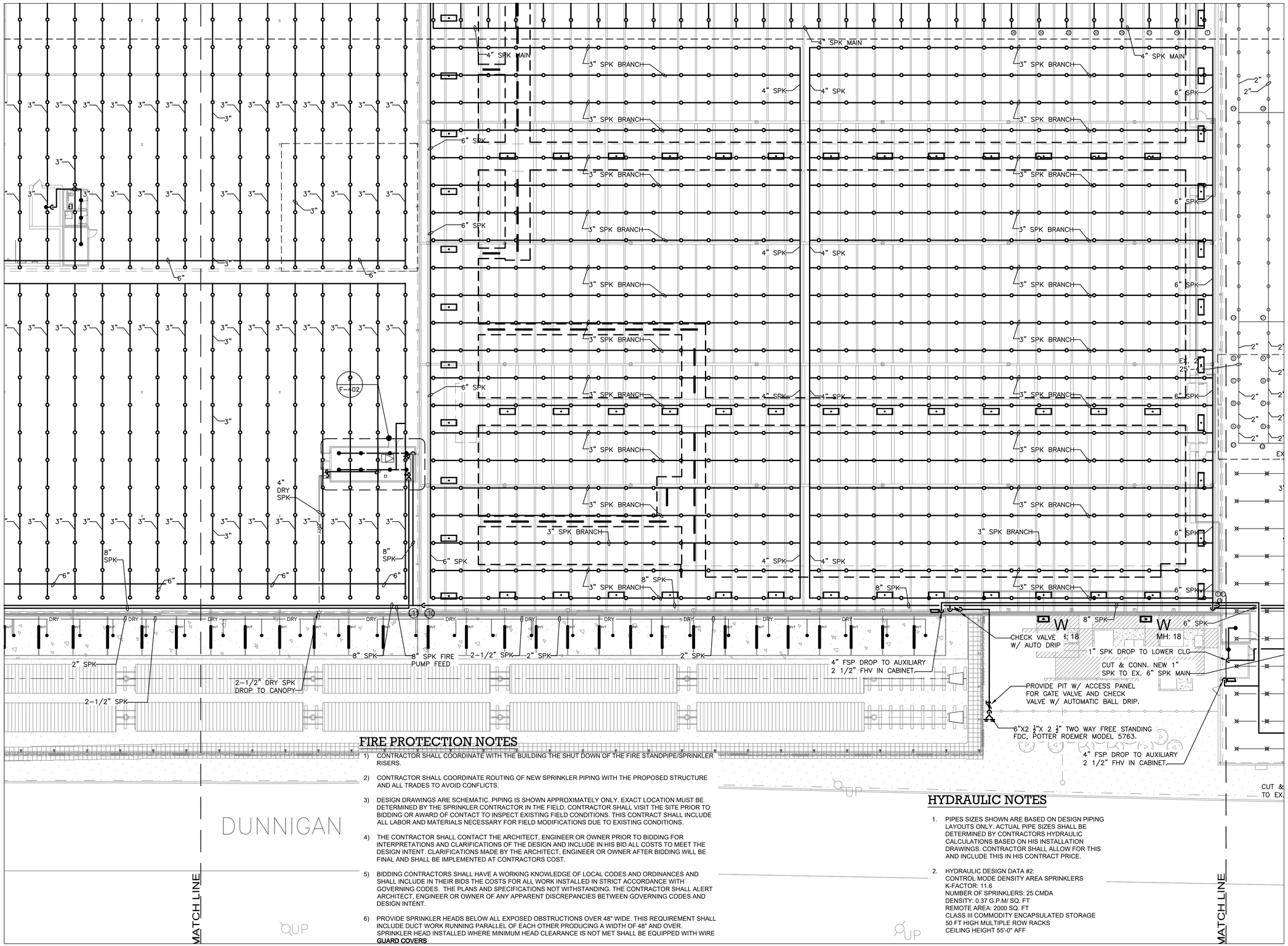

FIRE PROTECTION NOTES

1) CONTRACTOR SHALL COORDINATE WITH THE BUILDING THE SHUT DOWN OF THE FIRE STANDPIPE/SPRINKLER RISERS.

2) CONTRACTOR SHALL COORDINATE ROUTING OF NEW SPRINKLER PIPING WITH THE PROPOSED STRUCTURE AND ALL TRADES TO AVOID CONFLICTS.

3) DESIGN DRAWINGS ARE SCHEMATIC. PIPING IS SHOWN APPROXIMATELY ONLY. EXACT LOCATION MUST BE DETERMINED BY THE SPRINKLER CONTRACTOR IN THE FIELD. CONTRACTOR SHALL VISIT THE SITE PRIOR TO BIDDING OR AWARD OF CONTACT TO INSPECT EXISTING FIELD CONDITIONS. THIS CONTRACT SHALL INCLUDE ALL LABOR AND MATERIALS NECESSARY FOR FIELD MODIFICATIONS DUE TO EXISTING CONDITIONS.

4) THE CONTRACTOR SHALL CONTACT THE ARCHITECT, ENGINEER OR OWNER PRIOR TO BIDDING FOR INTERPRETATIONS AND CLARIFICATIONS OF THE DESIGN AND INCLUDE IN HIS BID ALL COSTS TO MEET THE DESIGN INTENT. CLARIFICATIONS MADE BY THE ARCHITECT, ENGINEER OR OWNER AFTER BIDDING WILL BE FINAL AND SHALL BE IMPLEMENTED AT CONTRACTORS COST.

5) BIDDING CONTRACTORS SHALL HAVE A WORKING KNOWLEDGE OF LOCAL CODES AND ORDINANCES AND SHALL INCLUDE IN THEIR BIDS THE COSTS FOR ALL WORK INSTALLED IN STRICT ACCORDANCE WITH GOVERNING CODES. THE PLANS AND SPECIFICATIONS NOT WITHSTANDING. THE CONTRACTOR SHALL ALERT ARCHITECT, ENGINEER OR OWNER OF ANY APPARENT DISCREPANCIES BETWEEN GOVERNING CODES AND DESIGN INTENT.

6) PROVIDE SPRINKLER HEADS BELOW ALL EXPOSED OBSTRUCTIONS OVER 48" WIDE. THIS REQUIREMENT SHALL INCLUDE DUCT WORK RUNNING PARALLEL OF EACH OTHER PRODUCING A WIDTH OF 48" AND OVER. SPRINKLER HEAD INSTALLED WHERE MINIMUM HEAD CLEARANCE IS NOT MET SHALL BE EQUIPPED WITH WIRE **GUARD COVERS**

HYDRAULIC NOTES

1. PIPES SIZES SHOWN ARE BASED ON DESIGN PIPING LAYOUTS ONLY. ACTUAL PIPE SIZES SHALL BE DETERMINED BY CONTRACTORS HYDRAULIC CALCULATIONS BASED ON HIS INSTALLATION DRAWINGS. CONTRACTOR SHALL ALLOW FOR THIS AND INCLUDE THIS IN HIS CONTRACT PRICE.

2. HYDRAULIC DESIGN DATA #2:
CONTROL MODE DENSITY AREA SPRINKLERS
K-FACTOR: 11.6
NUMBER OF SPRINKLERS: 25 CMDA
DENSITY: 0.37 G.P.M/ SQ. FT
REMOTE AREA: 2000 SQ. FT
CLASS III COMMODITY ENCAPSULATED STORAGE
50 FT HIGH MULTIPLE ROW RACKS
CEILING HEIGHT 55'-0" AFF

ARCHITECT
di Domenico + Partners LLP
Architecture
Landscape Architecture
Planning
3743 Crescent Street, 3rd Floor
Long Island City, New York 11101
Tel 212-337-0400
Fax 212-337-3567

CIVIL PLANNING ENGINEER
JMC Planning Engineering Landscape Architecture & Land Surveying, PLLC
120 Bedford Road
Armonk, New York 10504
Tel 914-273-5225
Fax 914-273-2102

MEP ENGINEER
BURNS ENGINEERING, PC.
1261 Broadway, Suite 708
New York, New York 10001
Tel 212-962-3503

STRUCTURAL ENGINEER
GEI50
1385 Broadway, 20th FL
New York, New York 10018
Tel 212-687-8282

MANHATTAN BEER DISTRIBUTORS
20 DUNNIGAN DRIVE
SUFFERN, NEW YORK

KEY PLAN

REV	DESCRIPTION	DATE
	ISSUED FOR DOB SUBMISSION	09/10/2021
	ISSUED FOR BID	10/15/2021

DRAWN BY :	M.ESPINAL
CHECKED BY :	J.CLARK
APPROVED BY :	J.MIZRAHI
DATE :	04/16/21
SCALE :	1/16" = 1'-0"

DRAWING TITLE :

FIRE PROTECTION L1 FLOOR PLAN QUADRANT 5

DWG NUMBER :

F-107

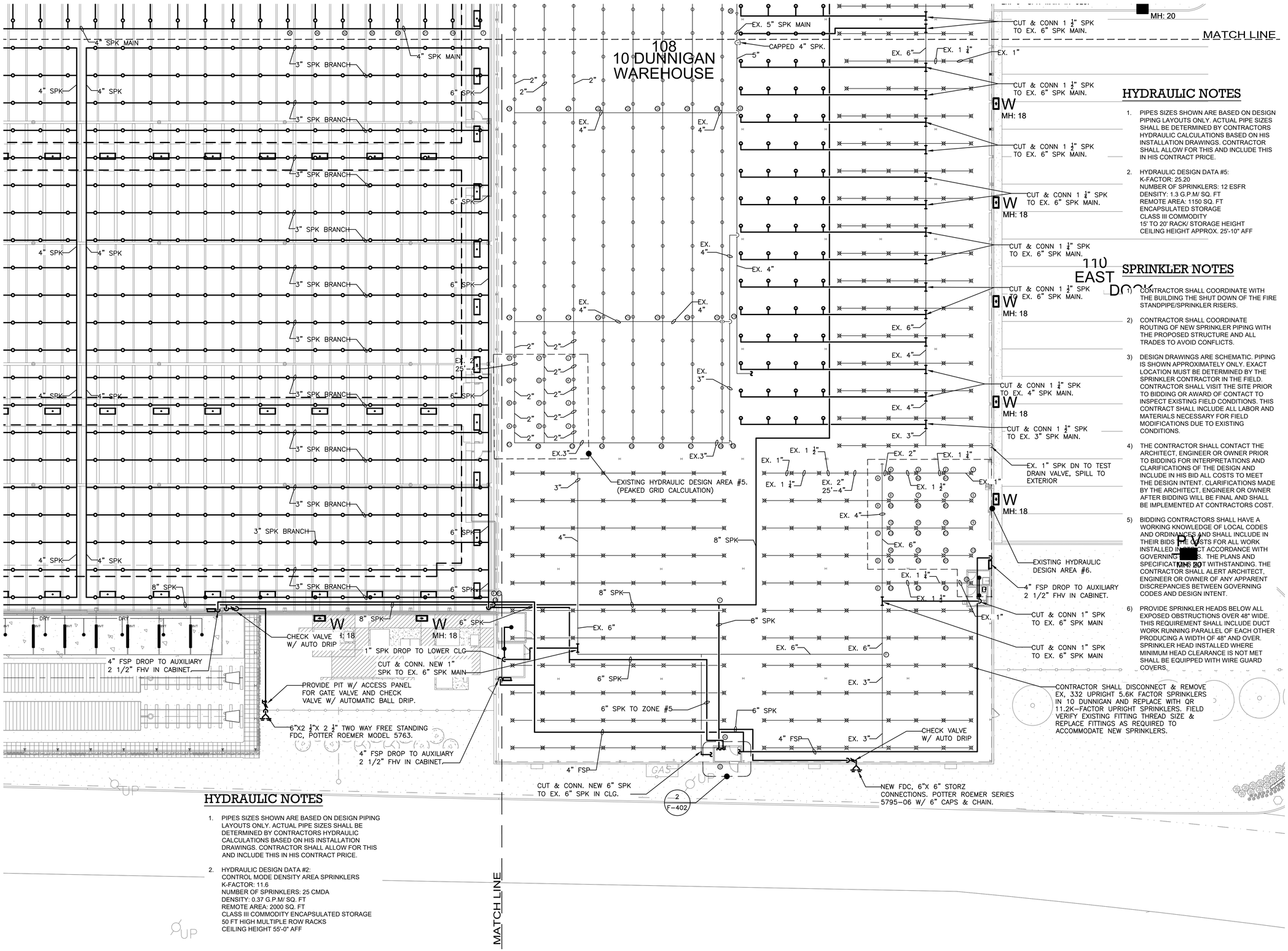

HYDRAULIC NOTES

1. PIPES SIZES SHOWN ARE BASED ON DESIGN PIPING LAYOUTS ONLY. ACTUAL PIPE SIZES SHALL BE DETERMINED BY CONTRACTORS HYDRAULIC CALCULATIONS BASED ON HIS INSTALLATION DRAWINGS. CONTRACTOR SHALL ALLOW FOR THIS AND INCLUDE THIS IN HIS CONTRACT PRICE.
2. HYDRAULIC DESIGN DATA #5:
   K-FACTOR: 25.20
   NUMBER OF SPRINKLERS: 12 ESFR
   DENSITY: 1.3 G.P.M/ SQ. FT
   REMOTE AREA: 1150 SQ. FT
   ENCAPSULATED STORAGE
   CLASS III COMMODITY
   15' TO 20' RACK/ STORAGE HEIGHT
   CEILING HEIGHT APPROX. 25'-10" AFF

SPRINKLER NOTES

1) CONTRACTOR SHALL COORDINATE WITH THE BUILDING THE SHUT DOWN OF THE FIRE STANDPIPE/SPRINKLER RISERS.
2) CONTRACTOR SHALL COORDINATE ROUTING OF NEW SPRINKLER PIPING WITH THE PROPOSED STRUCTURE AND ALL TRADES TO AVOID CONFLICTS.
3) DESIGN DRAWINGS ARE SCHEMATIC. PIPING IS SHOWN APPROXIMATELY ONLY. EXACT LOCATION MUST BE DETERMINED BY THE SPRINKLER CONTRACTOR IN THE FIELD. CONTRACTOR SHALL VISIT THE SITE PRIOR TO BIDDING OR AWARD OF CONTACT TO INSPECT EXISTING FIELD CONDITIONS. THIS CONTRACT SHALL INCLUDE ALL LABOR AND MATERIALS NECESSARY FOR FIELD MODIFICATIONS DUE TO EXISTING CONDITIONS.
4) THE CONTRACTOR SHALL CONTACT THE ARCHITECT, ENGINEER OR OWNER PRIOR TO BIDDING FOR INTERPRETATIONS AND CLARIFICATIONS OF THE DESIGN AND INCLUDE IN HIS BID ALL COSTS TO MEET THE DESIGN INTENT. CLARIFICATIONS MADE BY THE ARCHITECT, ENGINEER OR OWNER AFTER BIDDING WILL BE FINAL AND SHALL BE IMPLEMENTED AT CONTRACTORS COST.
5) BIDDING CONTRACTORS SHALL HAVE A WORKING KNOWLEDGE OF LOCAL CODES AND ORDINANCES AND SHALL INCLUDE IN THEIR BIDS THE COSTS FOR ALL WORK INSTALLED IN STRICT ACCORDANCE WITH GOVERNING CODES. THE PLANS AND SPECIFICATIONS NOTWITHSTANDING. THE CONTRACTOR SHALL ALERT ARCHITECT, ENGINEER OR OWNER OF ANY APPARENT DISCREPANCIES BETWEEN GOVERNING CODES AND DESIGN INTENT.
6) PROVIDE SPRINKLER HEADS BELOW ALL EXPOSED OBSTRUCTIONS OVER 48" WIDE. THIS REQUIREMENT SHALL INCLUDE DUCT WORK RUNNING PARALLEL OF EACH OTHER PRODUCING A WIDTH OF 48" AND OVER. SPRINKLER HEAD INSTALLED WHERE MINIMUM HEAD CLEARANCE IS NOT MET SHALL BE EQUIPPED WITH WIRE GUARD COVERS.

HYDRAULIC NOTES

1. PIPES SIZES SHOWN ARE BASED ON DESIGN PIPING LAYOUTS ONLY. ACTUAL PIPE SIZES SHALL BE DETERMINED BY CONTRACTORS HYDRAULIC CALCULATIONS BASED ON HIS INSTALLATION DRAWINGS. CONTRACTOR SHALL ALLOW FOR THIS AND INCLUDE THIS IN HIS CONTRACT PRICE.
2. HYDRAULIC DESIGN DATA #2:
   CONTROL MODE DENSITY AREA SPRINKLERS
   K-FACTOR: 11.6
   NUMBER OF SPRINKLERS: 25 CMDA
   DENSITY: 0.37 G.P.M/ SQ. FT
   REMOTE AREA: 2000 SQ. FT
   CLASS III COMMODITY ENCAPSULATED STORAGE
   50 FT HIGH MULTIPLE ROW RACKS
   CEILING HEIGHT 55'-0" AFF

ARCHITECT
di Domenico + Partners LLP
Architecture
Landscape Architecture
Planning
3743 Crescent Street, 3rd Floor
Long Island City, New York 11101
Tel 212-337-0400
Fax 212-337-3567

CIVIL PLANNING ENGINEER
JMC Planning Engineering Landscape Architecture & Land Surveying, PLLC
120 Bedford Road
Armonk, New York 10504
Tel 914-273-5225
Fax 914-273-2102

MEP ENGINEER
BURNS ENGINEERING, PC.
1261 Broadway, Suite 708
New York, New York 10001
Tel 212-962-3503

STRUCTURAL ENGINEER
GEI50
1385 Broadway, 20th FL
New York, New York 10018
Tel 212-687-8282

MANHATTAN BEER DISTRIBUTORS
20 DUNNIGAN DRIVE
SUFFERN, NEW YORK

KEY PLAN

REV	DESCRIPTION	DATE
	ISSUED FOR DOB SUBMISSION	09/10/2021
	ISSUED FOR BID	10/15/2021

DRAWN BY :	M.ESPINAL
CHECKED BY :	J.CLARK
APPROVED BY :	J.MIZRAHI
DATE :	04/16/21
SCALE :	1/16" = 1'-0"

DRAWING TITLE :

FIRE PROTECTION L1 FLOOR PLAN QUADRANT 6

DWG NUMBER :

F-108

FIRE PROTECTION NOTES

1) CONTRACTOR SHALL COORDINATE WITH THE BUILDING THE SHUT DOWN OF THE FIRE STANDPIPE/SPRINKLER RISERS.

2) CONTRACTOR SHALL COORDINATE ROUTING OF NEW SPRINKLER PIPING WITH THE PROPOSED STRUCTURE AND ALL TRADES TO AVOID CONFLICTS.

3) DESIGN DRAWINGS ARE SCHEMATIC. PIPING IS SHOWN APPROXIMATELY ONLY. EXACT LOCATION MUST BE DETERMINED BY THE SPRINKLER CONTRACTOR IN THE FIELD. CONTRACTOR SHALL VISIT THE SITE PRIOR TO BIDDING OR AWARD OF CONTACT TO INSPECT EXISTING FIELD CONDITIONS. THIS CONTRACT SHALL INCLUDE ALL LABOR AND MATERIALS NECESSARY FOR FIELD MODIFICATIONS DUE TO EXISTING CONDITIONS.

4) THE CONTRACTOR SHALL CONTACT THE ARCHITECT, ENGINEER OR OWNER PRIOR TO BIDDING FOR INTERPRETATIONS AND CLARIFICATIONS OF THE DESIGN AND INCLUDE IN HIS BID ALL COSTS TO MEET THE DESIGN INTENT. CLARIFICATIONS MADE BY THE ARCHITECT, ENGINEER OR OWNER AFTER BIDDING WILL BE FINAL AND SHALL BE IMPLEMENTED AT CONTRACTORS COST.

5) BIDDING CONTRACTORS SHALL HAVE A WORKING KNOWLEDGE OF LOCAL CODES AND ORDINANCES AND SHALL INCLUDE IN THEIR BIDS THE COSTS FOR ALL WORK INSTALLED IN STRICT ACCORDANCE WITH GOVERNING CODES. THE PLANS AND SPECIFICATIONS NOT WITHSTANDING. THE CONTRACTOR SHALL ALERT ARCHITECT, ENGINEER OR OWNER OF ANY APPARENT DISCREPANCIES BETWEEN GOVERNING CODES AND DESIGN INTENT.

6) PROVIDE SPRINKLER HEADS BELOW ALL EXPOSED OBSTRUCTIONS OVER 48" WIDE. THIS REQUIREMENT SHALL INCLUDE DUCT WORK RUNNING PARALLEL OF EACH OTHER PRODUCING A WIDTH OF 48" AND OVER. SPRINKLER HEAD INSTALLED WHERE MINIMUM HEAD CLEARANCE IS NOT MET SHALL BE EQUIPPED WITH WIRE GUARD COVERS.

7) PIPES SIZES SHOWN ARE BASED ON DESIGN PIPING LAYOUTS ONLY. ACTUAL PIPE SIZES SHALL BE DETERMINED BY CONTRACTORS HYDRAULIC CALCULATIONS BASED ON HIS INSTALLATION DRAWINGS. CONTRACTOR SHALL ALLOW FOR THIS AND INCLUDE THIS IN HIS CONTRACT PRICE.

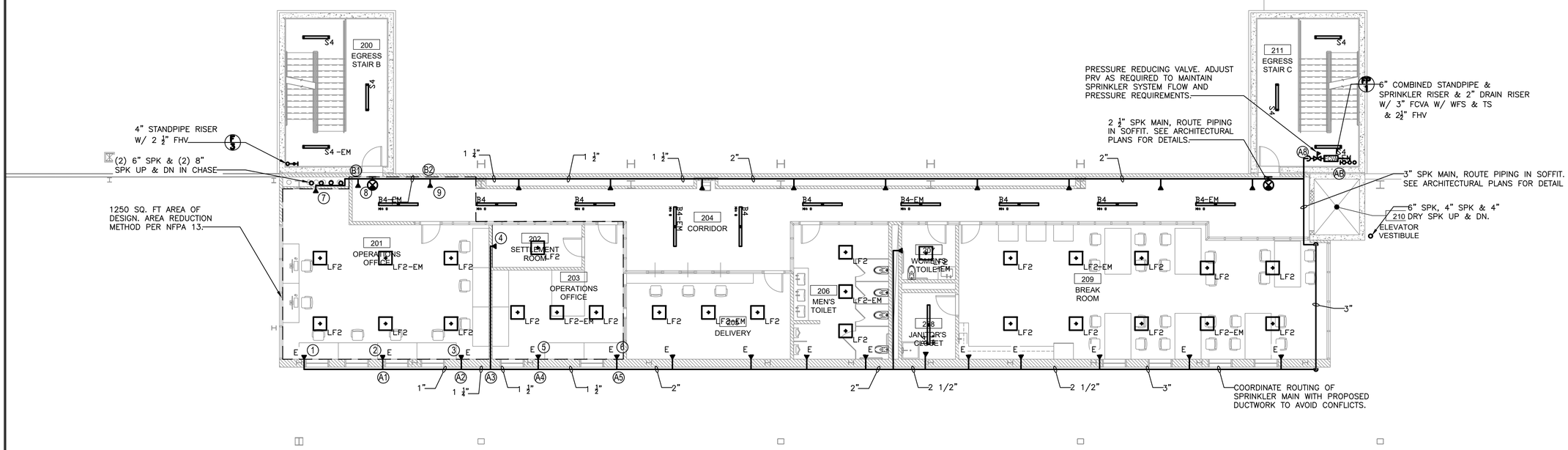

TO THE BEST KNOWLEDGE, BELIEF AND PROFESSIONAL JUDGEMENT, THESE PLANS AND SPECIFICATIONS ARE IN COMPLIANCE WITH THE 2020 ENERGY CONSERVATION CONSTRUCTION CODE OF NEW YORK STATE.

ARCHITECT

di Domenico + Partners LLP

Architecture
Landscape Architecture
Planning

3743 Crescent Street, 3rd Floor
Long Island City, New York 11101
Tel 212-337-0400
Fax 212-337-3567

CIVIL PLANNING ENGINEER

JMC Planning Engineering Landscape Architecture & Land Surveying, PLLC
120 Bedford Road
Armonk, New York 10504
Tel 914-273-5225
Fax 914-273-2102

MEP ENGINEER

BURNS ENGINEERING, PC.
1261 Broadway, Suite 708
New York, New York 10001
Tel 212-962-3503

STRUCTURAL ENGINEER

GEI50
1385 Broadway, 20th FL
New York, New York 10018
Tel 212-687-8282

MANHATTAN BEER DISTRIBUTORS
20 DUNNIGAN DRIVE
SUFFERN, NEW YORK

KEY PLAN

REV	DESCRIPTION	DATE
	ISSUED FOR DOB SUBMISSION	09/10/2021
	ISSUED FOR BID	10/15/2021

DRAWN BY :	M.ESPINAL
CHECKED BY :	J.CLARK
APPROVED BY :	J.MIZRAHI
DATE :	04/16/21
SCALE :	1/8" = 1'-0"

DRAWING TITLE :

FIRE PROTECTION
2ND FLOOR PLAN

DWG NUMBER :

F-109

SAMPLE GENERAL NOTES:

1. CONTRACTOR SHALL COORDINATE WITH THE BUILDING THE SHUT DOWN OF THE FIRE STANDPIPE/SPRINKLER RISERS.
2. ALL SPRINKLERS ARE TO BE CENTERED IN CEILING TILE.
3. DESIGN DRAWINGS ARE SCHEMATIC. PIPING IS SHOWN APPROXIMATELY ONLY. EXACT LOCATION MUST BE DETERMINED BY THE SPRINKLER CONTRACTOR IN THE FIELD. CONTRACTOR SHALL VISIT THE SITE PRIOR TO BIDDING OR AWARD OF CONTACT TO INSPECT EXISTING FIELD CONDITIONS. THIS CONTRACT SHALL INCLUDE ALL LABOR AND MATERIALS NECESSARY FOR FIELD MODIFICATIONS DUE TO EXISTING CONDITIONS.
4. THE CONTRACTOR SHALL CONTACT THE ARCHITECT, ENGINEER OR OWNER PRIOR TO BIDDING FOR INTERPRETATIONS AND CLARIFICATIONS OF THE DESIGN AND INCLUDE IN HIS BID ALL COSTS TO MEET THE DESIGN INTENT. CLARIFICATIONS MADE BY THE ARCHITECT, ENGINEER OR OWNER AFTER BIDDING WILL BE FINAL AND SHALL BE IMPLEMENTED AT CONTRACTORS COST.
5. BIDDING CONTRACTORS SHALL HAVE A WORKING KNOWLEDGE OF LOCAL CODES AND ORDINANCES AND SHALL INCLUDE IN THEIR BIDS THE COSTS FOR ALL WORK INSTALLED IN STRICT ACCORDANCE WITH GOVERNING CODES. THE PLANS AND SPECIFICATIONS NOT WITHSTANDING. THE CONTRACTOR SHALL ALERT ARCHITECT, ENGINEER OR OWNER OF ANY APPARENT DISCREPANCIES BETWEEN GOVERNING CODES AND DESIGN INTENT.
6. PROVIDE SPRINKLER HEADS BELOW ALL EXPOSED OBSTRUCTIONS OVER 48" WIDE THIS REQUIREMENT SHALL INCLUDE DUCT WORK RUNNING PARALLEL OF EACH OTHER PRODUCING A WIDTH OF 48" AND OVER SPRINKLER HEAD INSTALLED WHERE MINIMUM HEAD CLEARANCE IS NOT MET SHALL BE EQUIPPED WITH WIRE GUARD COVERS.
7. PIPES SIZES SHOWN ARE BASED ON DESIGN PIPING LAYOUTS ONLY. ACTUAL PIPE SIZES SHALL BE DETERMINED BY CONTRACTORS HYDRAULIC CALCULATIONS BASED ON HIS INSTALLATION DRAWINGS. CONTRACTOR SHALL ALLOW FOR THIS AND INCLUDE THIS IN HIS CONTRACT PRICE.

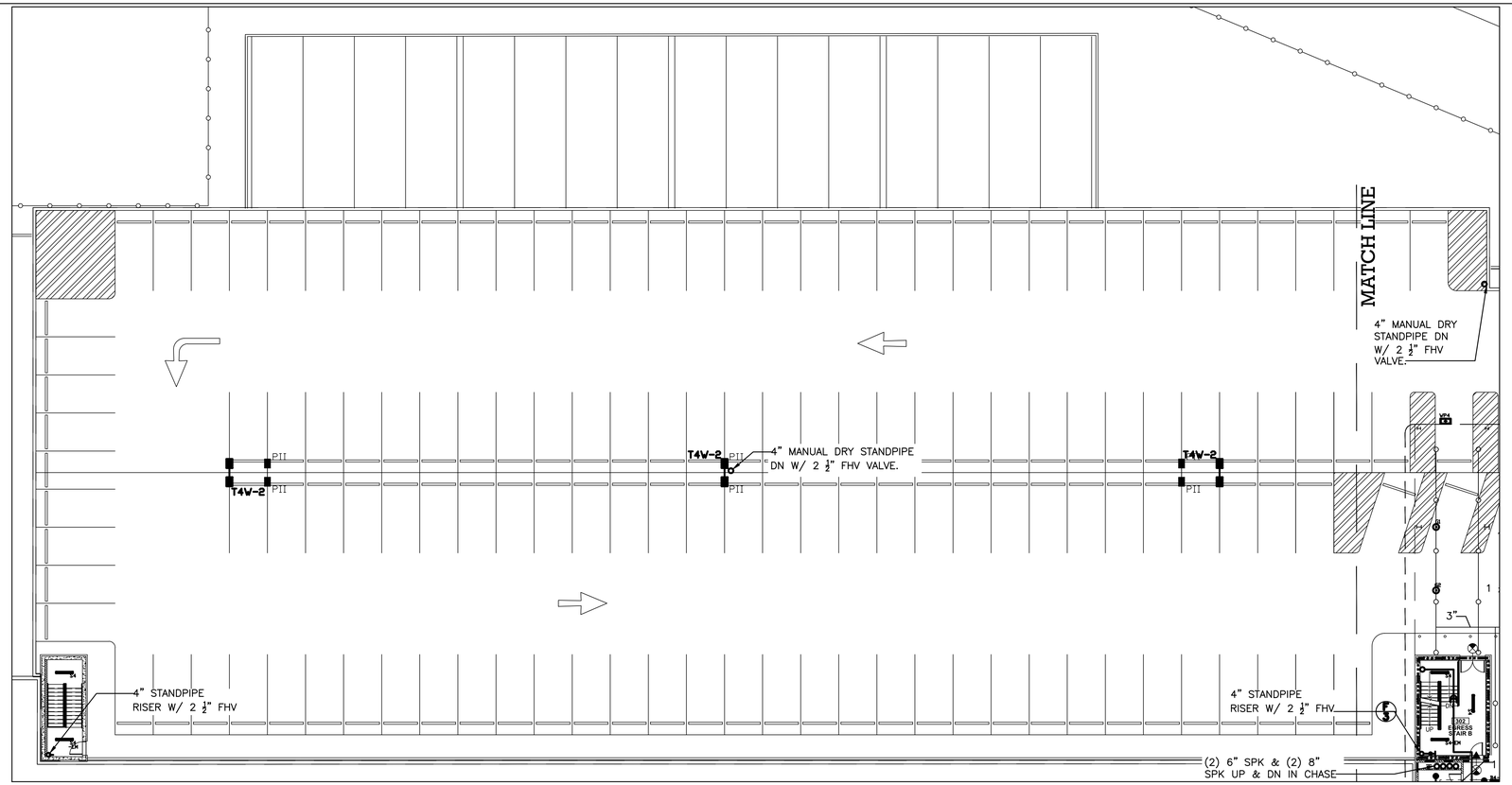

1 P-108 PARKING DECK PART PLAN
1/16" = 1'-0"
NORTH

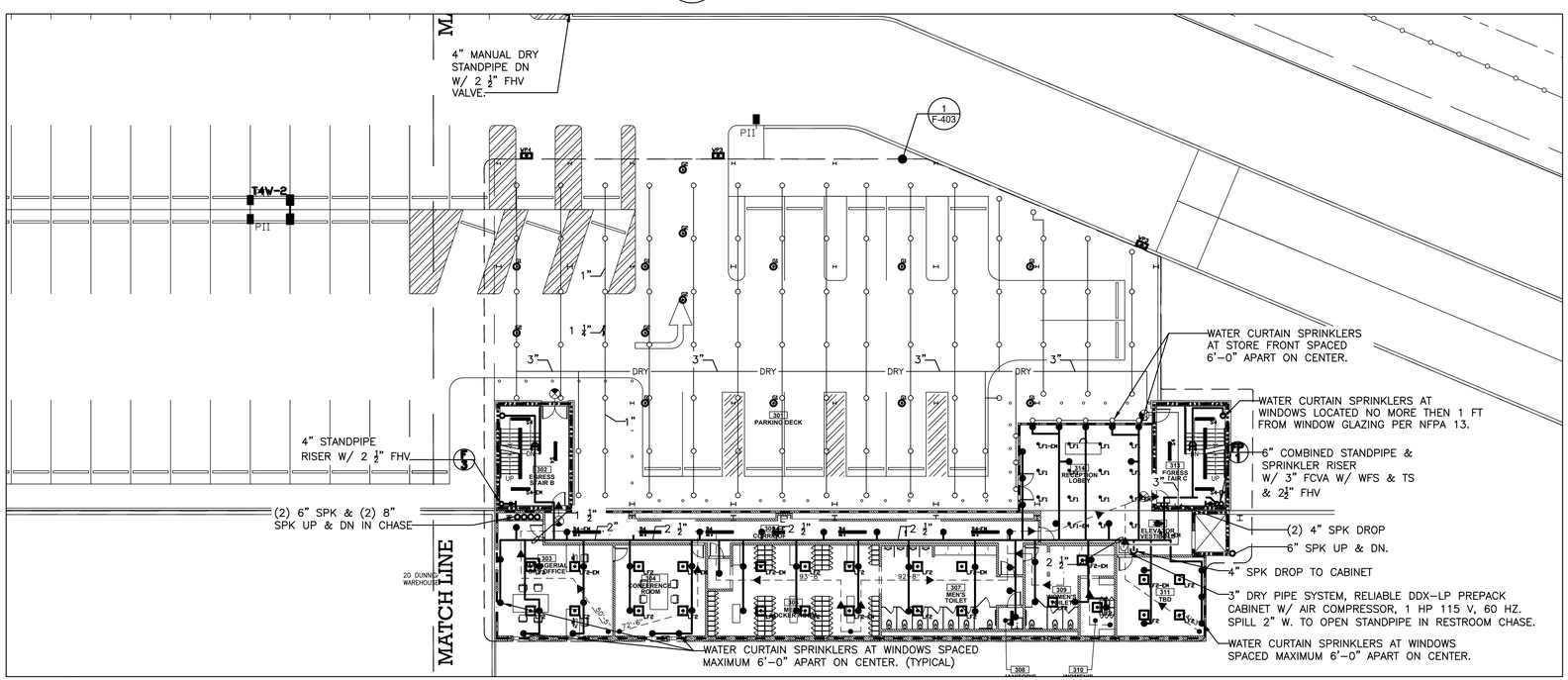

2 P-108 PARKING DECK PART PLAN
1/16" = 1'-0"
NORTH

TO THE BEST KNOWLEDGE, BELIEF AND PROFESSIONAL JUDGEMENT, THESE PLANS AND SPECIFICATIONS ARE IN COMPLIANCE WITH THE 2020 ENERGY CONSERVATION CONSTRUCTION CODE OF NEW YORK STATE.

ARCHITECT
di Domenico + Partners LLP
Architecture
Landscape Architecture
Planning
3743 Crescent Street, 3rd Floor
Long Island City, New York 11101
Tel 212-337-0400
Fax 212-337-3567

CIVIL PLANNING ENGINEER
JMC Planning Engineering Landscape Architecture & Land Surveying, PLLC
120 Bedford Road
Armonk, New York 10504
Tel 914-273-5225
Fax 914-273-2102

MEP ENGINEER
BURNS ENGINEERING, PC.
1261 Broadway, Suite 708
New York, New York 10001
Tel 212-962-3503

STRUCTURAL ENGINEER
GEI50
1385 Broadway, 20th FL
New York, New York 10018
Tel 212-687-8282

MANHATTAN BEER DISTRIBUTORS
20 DUNNIGAN DRIVE
SUFFERN, NEW YORK

KEY PLAN

REV	DESCRIPTION	DATE
	ISSUED FOR DOB SUBMISSION	09/10/2021
	ISSUED FOR BID	10/15/2021

DRAWN BY :	M.ESPINAL
CHECKED BY :	J.CLARK
APPROVED BY :	J.MIZRAHI
DATE :	04/16/21
SCALE :	1/16" = 1'-0"

DRAWING TITLE :

FIRE PROTECTION L3 FLOOR PLAN

DWG NUMBER :

F-110

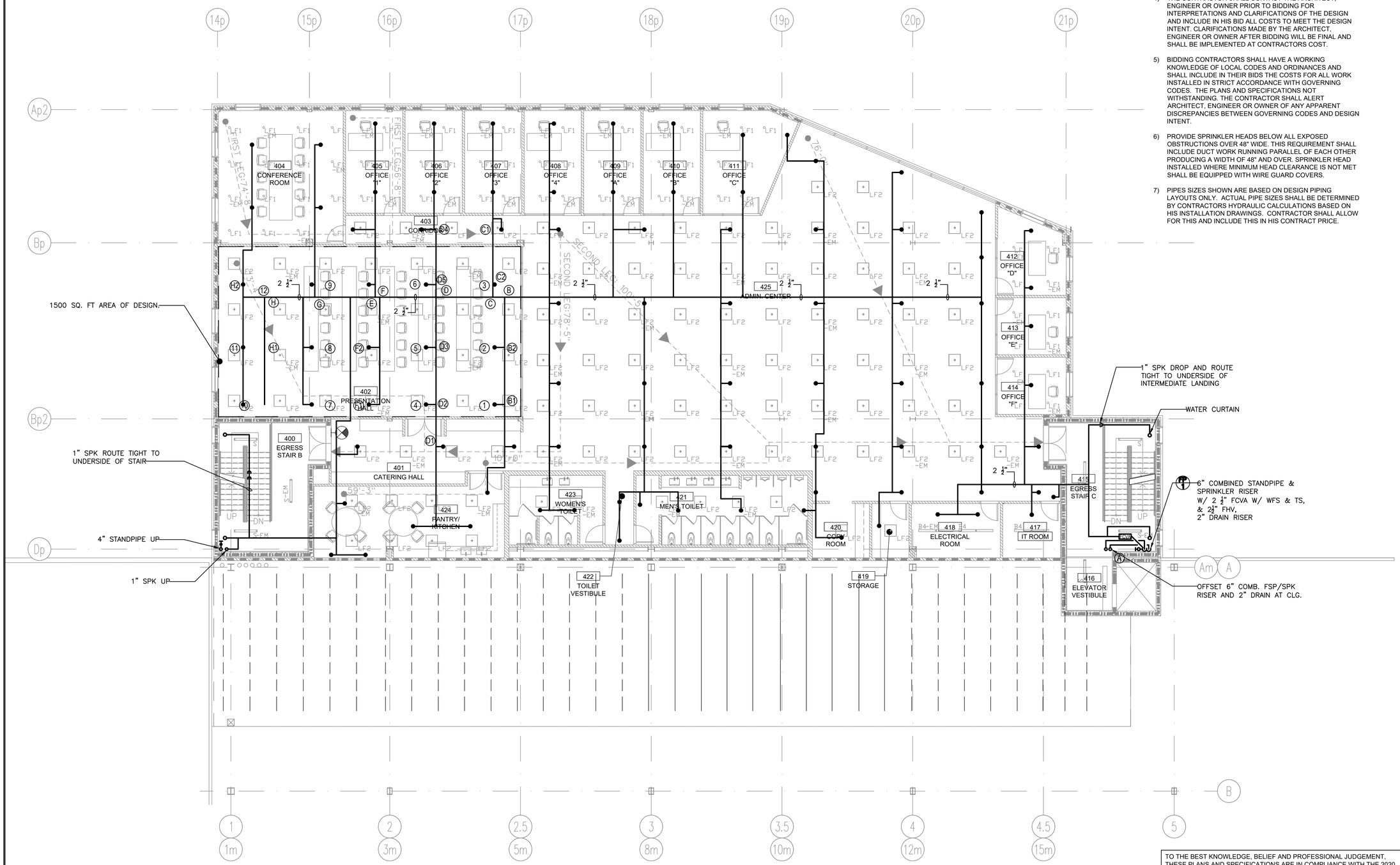

FIRE PROTECTION NOTES

1) CONTRACTOR SHALL COORDINATE WITH THE BUILDING THE SHUT DOWN OF THE FIRE STANDPIPE/SPRINKLER RISERS.

2) CONTRACTOR SHALL COORDINATE ROUTING OF NEW SPRINKLER PIPING WITH THE PROPOSED STRUCTURE AND ALL TRADES TO AVOID CONFLICTS.

3) DESIGN DRAWINGS ARE SCHEMATIC. PIPING IS SHOWN APPROXIMATELY ONLY. EXACT LOCATION MUST BE DETERMINED BY THE SPRINKLER CONTRACTOR IN THE FIELD. CONTRACTOR SHALL VISIT THE SITE PRIOR TO BIDDING OR AWARD OF CONTACT TO INSPECT EXISTING FIELD CONDITIONS. THIS CONTRACT SHALL INCLUDE ALL LABOR AND MATERIALS NECESSARY FOR FIELD MODIFICATIONS DUE TO EXISTING CONDITIONS.

4) THE CONTRACTOR SHALL CONTACT THE ARCHITECT, ENGINEER OR OWNER PRIOR TO BIDDING FOR INTERPRETATIONS AND CLARIFICATIONS OF THE DESIGN AND INCLUDE IN HIS BID ALL COSTS TO MEET THE DESIGN INTENT. CLARIFICATIONS MADE BY THE ARCHITECT, ENGINEER OR OWNER AFTER BIDDING WILL BE FINAL AND SHALL BE IMPLEMENTED AT CONTRACTORS COST.

5) BIDDING CONTRACTORS SHALL HAVE A WORKING KNOWLEDGE OF LOCAL CODES AND ORDINANCES AND SHALL INCLUDE IN THEIR BIDS THE COSTS FOR ALL WORK INSTALLED IN STRICT ACCORDANCE WITH GOVERNING CODES. THE PLANS AND SPECIFICATIONS NOT WITHSTANDING. THE CONTRACTOR SHALL ALERT ARCHITECT, ENGINEER OR OWNER OF ANY APPARENT DISCREPANCIES BETWEEN GOVERNING CODES AND DESIGN INTENT.

6) PROVIDE SPRINKLER HEADS BELOW ALL EXPOSED OBSTRUCTIONS OVER 48" WIDE. THIS REQUIREMENT SHALL INCLUDE DUCT WORK RUNNING PARALLEL OF EACH OTHER PRODUCING A WIDTH OF 48" AND OVER. SPRINKLER HEAD INSTALLED WHERE MINIMUM HEAD CLEARANCE IS NOT MET SHALL BE EQUIPPED WITH WIRE GUARD COVERS.

7) PIPES SIZES SHOWN ARE BASED ON DESIGN PIPING LAYOUTS ONLY. ACTUAL PIPE SIZES SHALL BE DETERMINED BY CONTRACTORS HYDRAULIC CALCULATIONS BASED ON HIS INSTALLATION DRAWINGS. CONTRACTOR SHALL ALLOW FOR THIS AND INCLUDE THIS IN HIS CONTRACT PRICE.

TO THE BEST KNOWLEDGE, BELIEF AND PROFESSIONAL JUDGEMENT, THESE PLANS AND SPECIFICATIONS ARE IN COMPLIANCE WITH THE 2020 ENERGY CONSERVATION CONSTRUCTION CODE OF NEW YORK STATE.

ARCHITECT

di Domenico + Partners LLP
Architecture
Landscape Architecture
Planning
3743 Crescent Street, 3rd Floor
Long Island City, New York 11101
Tel 212-337-0400
Fax 212-337-3567

CIVIL PLANNING ENGINEER

JMC Planning Engineering Landscape Architecture & Land Surveying, PLLC
120 Bedford Road
Armonk, New York 10504
Tel 914-273-5225
Fax 914-273-2102

MEP ENGINEER

BURNS ENGINEERING, PC.
1261 Broadway, Suite 708
New York, New York 10001
Tel 212-962-3503

STRUCTURAL ENGINEER

GEI50
1385 Broadway, 20th FL
New York, New York 10018
Tel 212-687-8282

MANHATTAN BEER DISTRIBUTORS
20 DUNNIGAN DRIVE
SUFFERN, NEW YORK

KEY PLAN

REV	DESCRIPTION	DATE
	ISSUED FOR DOB SUBMISSION	09/10/2021
	ISSUED FOR BID	10/15/2021

DRAWN BY :	M.ESPINAL
CHECKED BY :	J.CLARK
APPROVED BY :	J.MIZRAHI
DATE :	04/16/21
SCALE :	1/8" = 1'-0"

DRAWING TITLE :

FIRE PROTECTION
4TH FLOOR PLAN

DWG NUMBER :

F-111

FIRE PROTECTION NOTES

1. CONTRACTOR SHALL COORDINATE WITH THE BUILDING THE SHUT DOWN OF THE FIRE STANDPIPE/SPRINKLER RISERS.
2. CONTRACTOR SHALL COORDINATE ROUTING OF NEW SPRINKLER PIPING WITH THE PROPOSED STRUCTURE AND ALL TRADES TO AVOID CONFLICTS.
3. DESIGN DRAWINGS ARE SCHEMATIC. PIPING IS SHOWN APPROXIMATELY ONLY. EXACT LOCATION MUST BE DETERMINED BY THE SPRINKLER CONTRACTOR IN THE FIELD. CONTRACTOR SHALL VISIT THE SITE PRIOR TO BIDDING OR AWARD OF CONTACT TO INSPECT EXISTING FIELD CONDITIONS. THIS CONTRACT SHALL INCLUDE ALL LABOR AND MATERIALS NECESSARY FOR FIELD MODIFICATIONS DUE TO EXISTING CONDITIONS.
4. THE CONTRACTOR SHALL CONTACT THE ARCHITECT, ENGINEER OR OWNER PRIOR TO BIDDING FOR INTERPRETATIONS AND CLARIFICATIONS OF THE DESIGN AND INCLUDE IN HIS BID ALL COSTS TO MEET THE DESIGN INTENT. CLARIFICATIONS MADE BY THE ARCHITECT, ENGINEER OR OWNER AFTER BIDDING WILL BE FINAL AND SHALL BE IMPLEMENTED AT CONTRACTORS COST.
5. BIDDING CONTRACTORS SHALL HAVE A WORKING KNOWLEDGE OF LOCAL CODES AND ORDINANCES AND SHALL INCLUDE IN THEIR BIDS THE COSTS FOR ALL WORK INSTALLED IN STRICT ACCORDANCE WITH GOVERNING CODES. THE PLANS AND SPECIFICATIONS NOT WITHSTANDING. THE CONTRACTOR SHALL ALERT ARCHITECT, ENGINEER OR OWNER OF ANY APPARENT DISCREPANCIES BETWEEN GOVERNING CODES AND DESIGN INTENT.
6. PROVIDE SPRINKLER HEADS BELOW ALL EXPOSED OBSTRUCTIONS OVER 48" WIDE. THIS REQUIREMENT SHALL INCLUDE DUCT WORK RUNNING PARALLEL OF EACH OTHER PRODUCING A WIDTH OF 48" AND OVER. SPRINKLER HEAD INSTALLED WHERE MINIMUM HEAD CLEARANCE IS NOT MET SHALL BE EQUIPPED WITH WIRE GUARD COVERS.
7. PIPES SIZES SHOWN ARE BASED ON DESIGN PIPING LAYOUTS ONLY. ACTUAL PIPE SIZES SHALL BE DETERMINED BY CONTRACTORS HYDRAULIC CALCULATIONS BASED ON HIS INSTALLATION DRAWINGS. CONTRACTOR SHALL ALLOW FOR THIS AND INCLUDE THIS IN HIS CONTRACT PRICE.

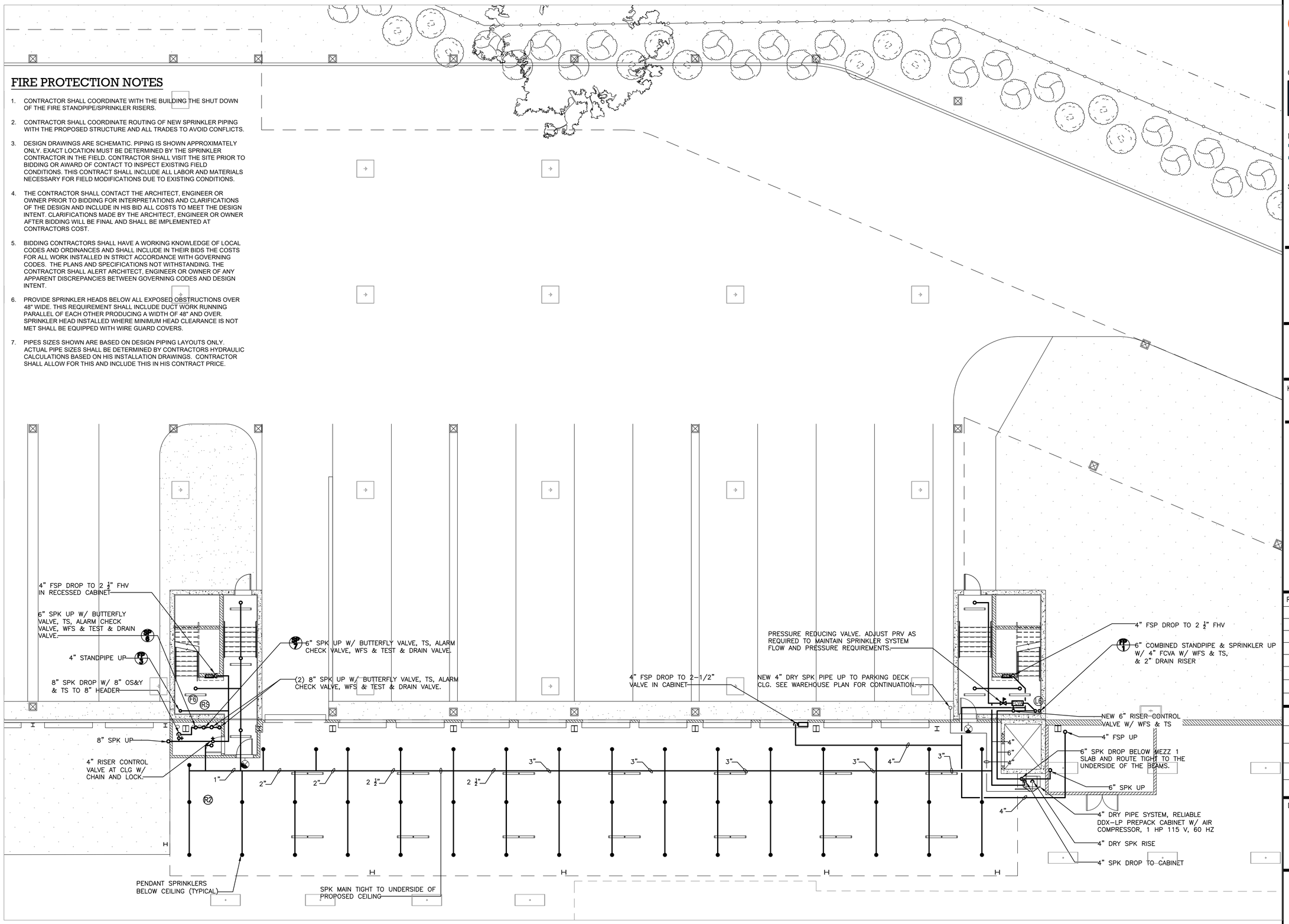

TO THE BEST KNOWLEDGE, BELIEF AND PROFESSIONAL JUDGEMENT, THESE PLANS AND SPECIFICATIONS ARE IN COMPLIANCE WITH THE 2020 ENERGY CONSERVATION CONSTRUCTION CODE OF NEW YORK STATE.

ARCHITECT

di Domenico + Partners LLP
Architecture
Landscape Architecture
Planning
3743 Crescent Street, 3rd Floor
Long Island City, New York 11101
Tel 212-337-0400
Fax 212-337-3567

CIVIL PLANNING ENGINEER

JMC Planning Engineering Landscape Architecture & Land Surveying, PLLC
120 Bedford Road
Armonk, New York 10504
Tel 914-273-5225
Fax 914-273-2102

MEP ENGINEER

BURNS ENGINEERING, PC.
1261 Broadway, Suite 708
New York, New York 10001
Tel 212-962-3503

STRUCTURAL ENGINEER

GEI50
1385 Broadway, 20th FL
New York, New York 10018
Tel 212-687-8282

MANHATTAN BEER DISTRIBUTORS
20 DUNNIGAN DRIVE
SUFFERN, NEW YORK

KEY PLAN

REV	DESCRIPTION	DATE
	ISSUED FOR DOB SUBMISSION	09/10/2021
	ISSUED FOR BID	10/15/2021

DRAWN BY :	M.ESPINAL
CHECKED BY :	J.CLARK
APPROVED BY :	J.MIZRAHI
DATE :	04/16/21
SCALE :	NOT TO SCALE

DRAWING TITLE :

FIRE PROTECTION 1ST FLOOR PART PLAN

DWG NUMBER :

F-401

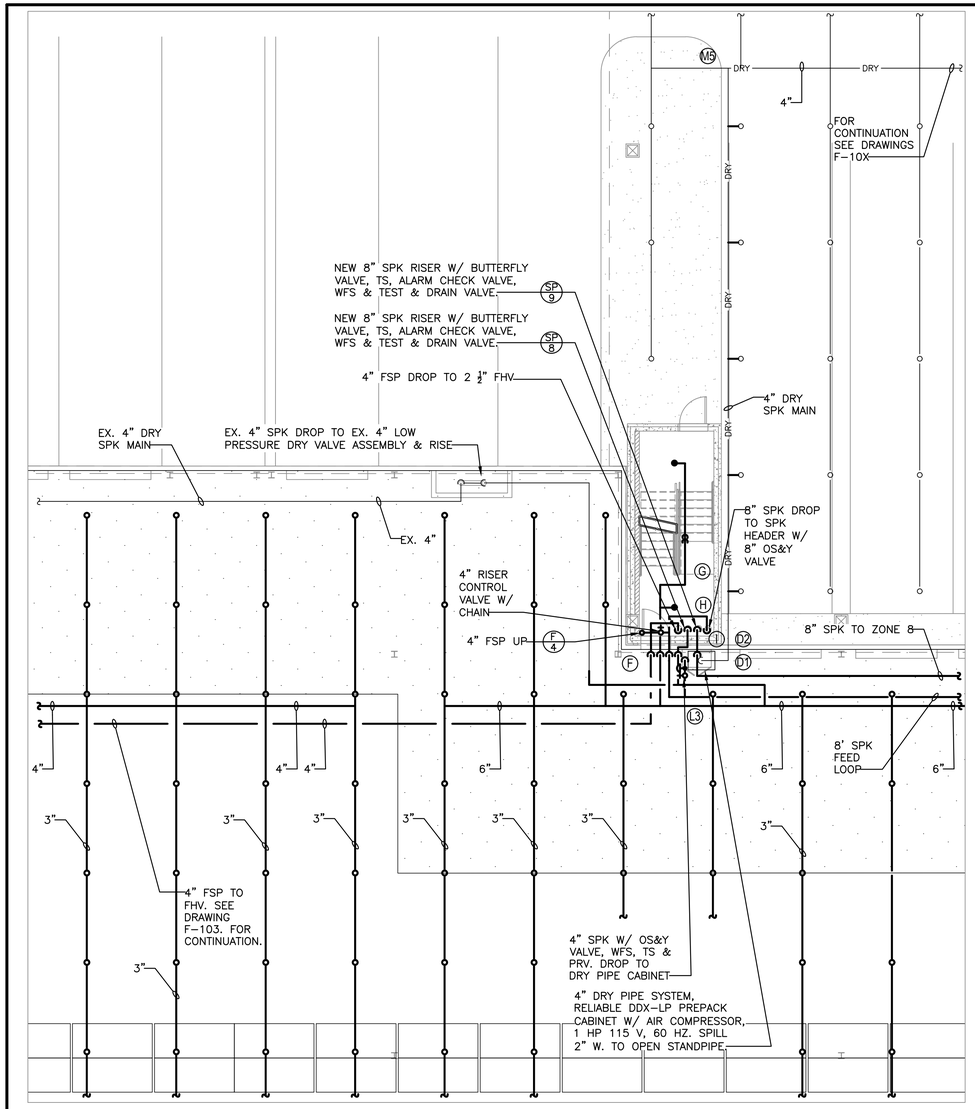

1 / F-402 **FIRE PROTECTION STAIR A PART PLAN**
1/8" = 1'-0"

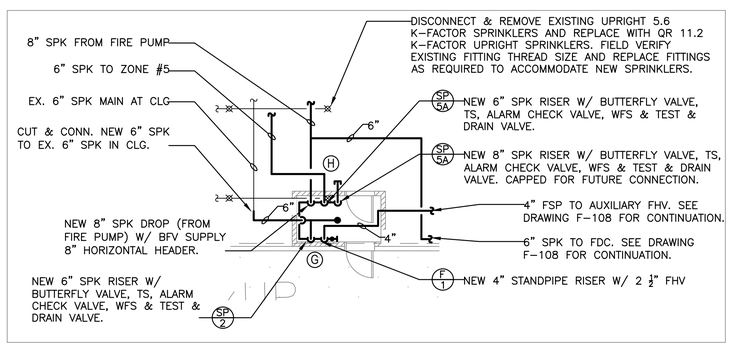

2 / F-402 **SPRINKLER RISER ROOM 111 - PART PLAN**
1/8" = 1'-0"

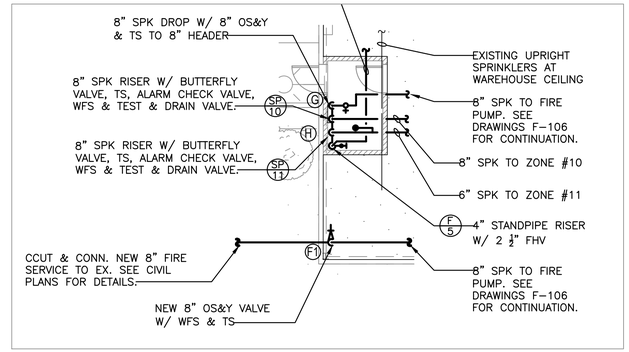

3 / F-402 **SPRINKLER RISER CLOSET 118_PART PLAN**
1/8" = 1'-0"

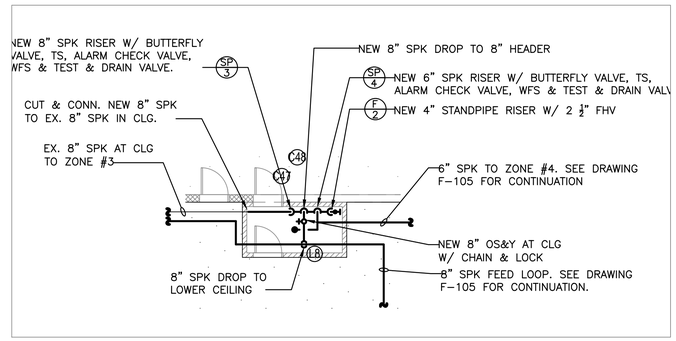

4 / F-402 **SPRINKLER RISER ROOM 109 - PART PLAN**
1/8" = 1'-0"

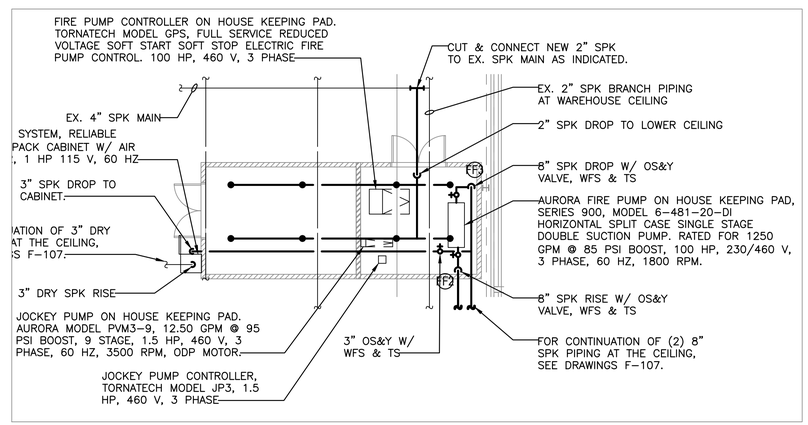

5 / F-402 **FIRE PUMP ROOM PART PLAN**
1/8" = 1'-0"

TO THE BEST KNOWLEDGE, BELIEF AND PROFESSIONAL JUDGEMENT, THESE PLANS AND SPECIFICATIONS ARE IN COMPLIANCE WITH THE 2020 ENERGY CONSERVATION CONSTRUCTION CODE OF NEW YORK STATE.

ARCHITECT
di Domenico + Partners LLP
Architecture
Landscape Architecture
Planning
3743 Crescent Street, 3rd Floor
Long Island City, New York 11101
Tel 212-337-0400
Fax 212-337-3567

CIVIL PLANNING ENGINEER
JMC Planning Engineering Landscape Architecture & Land Surveying, PLLC
120 Bedford Road
Armonk, New York 10504
Tel 914-273-5225
Fax 914-273-2102

MEP ENGINEER
BURNS ENGINEERING, PC.
1261 Broadway, Suite 708
New York, New York 10001
Tel 212-962-3503

STRUCTURAL ENGINEER
GEI50
1385 Broadway, 20th FL
New York, New York 10018
Tel 212-687-8282

MANHATTAN BEER DISTRIBUTORS
20 DUNNIGAN DRIVE
SUFFERN, NEW YORK

KEY PLAN

REV	DESCRIPTION	DATE
	ISSUED FOR DOB SUBMISSION	09/10/2021
	ISSUED FOR BID	10/15/2021

DRAWN BY :	M.ESPINAL
CHECKED BY :	J.CLARK
APPROVED BY :	J.MIZRAHI
DATE :	04/16/21
SCALE :	SEE PLANS

DRAWING TITLE :
FIRE PROTECTION PART PLANS

DWG NUMBER :
F-402

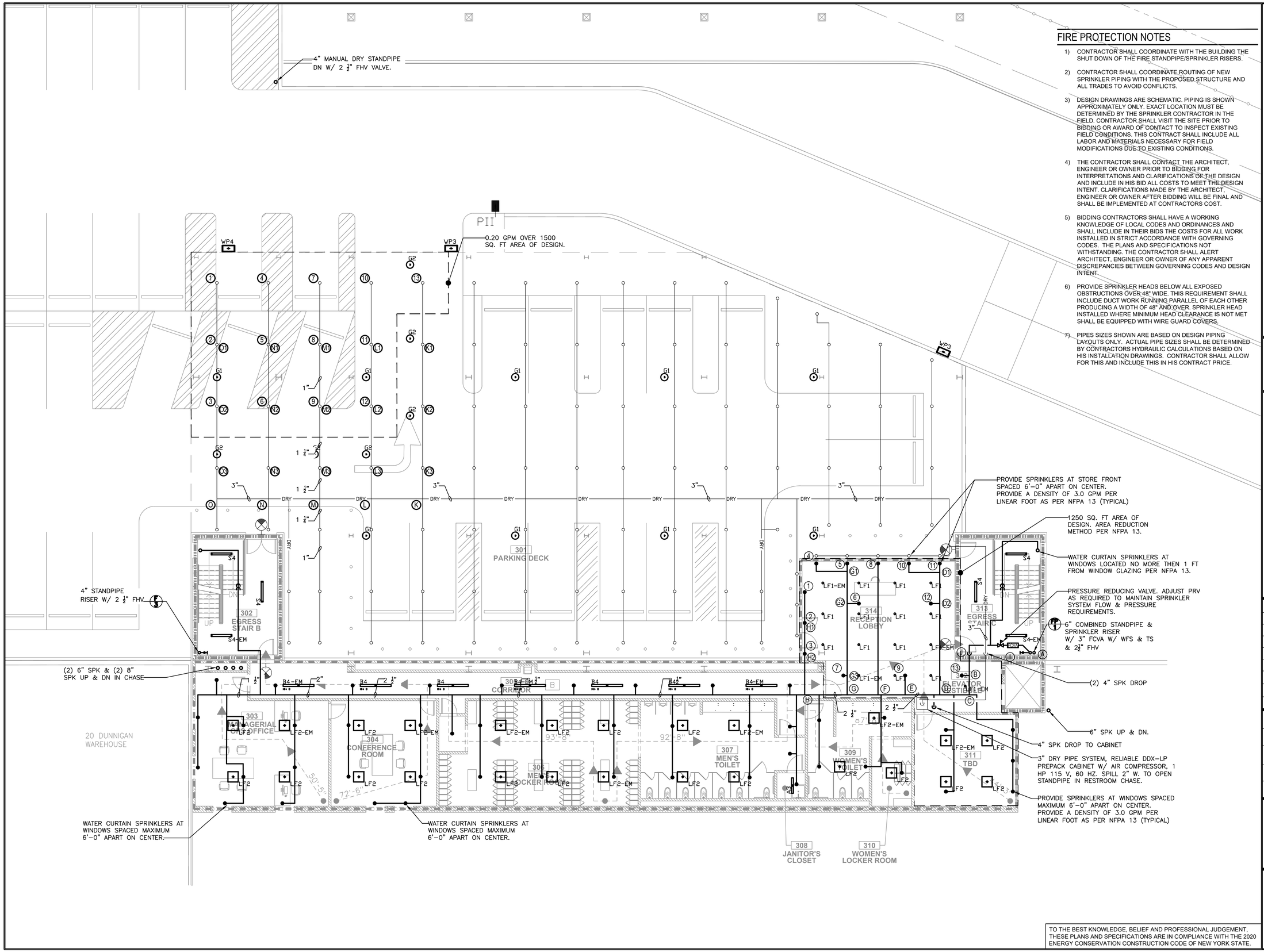

FIRE PROTECTION NOTES

1) CONTRACTOR SHALL COORDINATE WITH THE BUILDING THE SHUT DOWN OF THE FIRE STANDPIPE/SPRINKLER RISERS.
2) CONTRACTOR SHALL COORDINATE ROUTING OF NEW SPRINKLER PIPING WITH THE PROPOSED STRUCTURE AND ALL TRADES TO AVOID CONFLICTS.
3) DESIGN DRAWINGS ARE SCHEMATIC. PIPING IS SHOWN APPROXIMATELY ONLY. EXACT LOCATION MUST BE DETERMINED BY THE SPRINKLER CONTRACTOR IN THE FIELD. CONTRACTOR SHALL VISIT THE SITE PRIOR TO BIDDING OR AWARD OF CONTACT TO INSPECT EXISTING FIELD CONDITIONS. THIS CONTRACT SHALL INCLUDE ALL LABOR AND MATERIALS NECESSARY FOR FIELD MODIFICATIONS DUE TO EXISTING CONDITIONS.
4) THE CONTRACTOR SHALL CONTACT THE ARCHITECT, ENGINEER OR OWNER PRIOR TO BIDDING FOR INTERPRETATIONS AND CLARIFICATIONS OF THE DESIGN AND INCLUDE IN HIS BID ALL COSTS TO MEET THE DESIGN INTENT. CLARIFICATIONS MADE BY THE ARCHITECT, ENGINEER OR OWNER AFTER BIDDING WILL BE FINAL AND SHALL BE IMPLEMENTED AT CONTRACTORS COST.
5) BIDDING CONTRACTORS SHALL HAVE A WORKING KNOWLEDGE OF LOCAL CODES AND ORDINANCES AND SHALL INCLUDE IN THEIR BIDS THE COSTS FOR ALL WORK INSTALLED IN STRICT ACCORDANCE WITH GOVERNING CODES. THE PLANS AND SPECIFICATIONS NOT WITHSTANDING. THE CONTRACTOR SHALL ALERT ARCHITECT, ENGINEER OR OWNER OF ANY APPARENT DISCREPANCIES BETWEEN GOVERNING CODES AND DESIGN INTENT.
6) PROVIDE SPRINKLER HEADS BELOW ALL EXPOSED OBSTRUCTIONS OVER 48" WIDE. THIS REQUIREMENT SHALL INCLUDE DUCT WORK RUNNING PARALLEL OF EACH OTHER PRODUCING A WIDTH OF 48" AND OVER. SPRINKLER HEAD INSTALLED WHERE MINIMUM HEAD CLEARANCE IS NOT MET SHALL BE EQUIPPED WITH WIRE GUARD COVERS.
7) PIPES SIZES SHOWN ARE BASED ON DESIGN PIPING LAYOUTS ONLY. ACTUAL PIPE SIZES SHALL BE DETERMINED BY CONTRACTORS HYDRAULIC CALCULATIONS BASED ON HIS INSTALLATION DRAWINGS. CONTRACTOR SHALL ALLOW FOR THIS AND INCLUDE THIS IN HIS CONTRACT PRICE.

TO THE BEST KNOWLEDGE, BELIEF AND PROFESSIONAL JUDGEMENT, THESE PLANS AND SPECIFICATIONS ARE IN COMPLIANCE WITH THE 2020 ENERGY CONSERVATION CONSTRUCTION CODE OF NEW YORK STATE.

ARCHITECT
di Domenico + Partners LLP
Architecture
Landscape Architecture
Planning
3743 Crescent Street, 3rd Floor
Long Island City, New York 11101
Tel 212-337-0400
Fax 212-337-3567

CIVIL PLANNING ENGINEER
JMC Planning Engineering Landscape Architecture & Land Surveying, PLLC
120 Bedford Road
Armonk, New York 10504
Tel 914-273-5225
Fax 914-273-2102

MEP ENGINEER
BURNS ENGINEERING, PC.
1261 Broadway, Suite 708
New York, New York 10001
Tel 212-962-3503

STRUCTURAL ENGINEER
GEI50
1385 Broadway, 20th FL
New York, New York 10018
Tel 212-687-8282

MANHATTAN BEER DISTRIBUTORS
20 DUNNIGAN DRIVE
SUFFERN, NEW YORK

KEY PLAN

REV	DESCRIPTION	DATE
	ISSUED FOR DOB SUBMISSION	09/10/2021
	ISSUED FOR BID	10/15/2021

DRAWN BY :	M.ESPINAL
CHECKED BY :	J.CLARK
APPROVED BY :	J.MIZRAHI
DATE :	04/16/21
SCALE :	1/8" = 1'-0"

DRAWING TITLE :

FIRE PROTECTION
3RD FLOOR PLAN

DWG NUMBER :

F-403

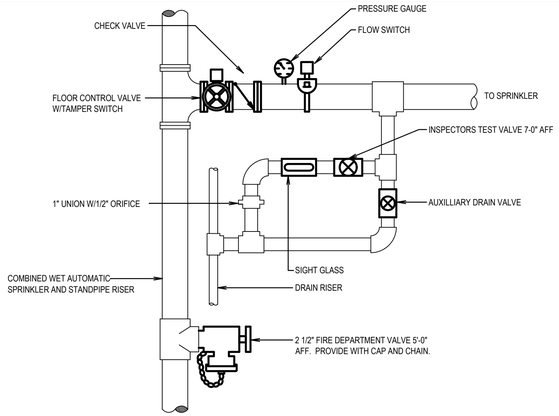

COMBINED WET AUTOMATIC SPRINKLER AND STANDPIPE RISER FLOOR CONTROL VALVE ASSEMBLY

NOT TO SCALE

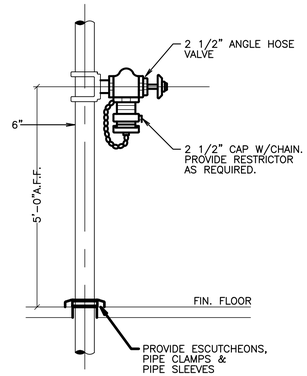

FIRE HOSE VALVE ASSEMBLY

NOT TO SCALE

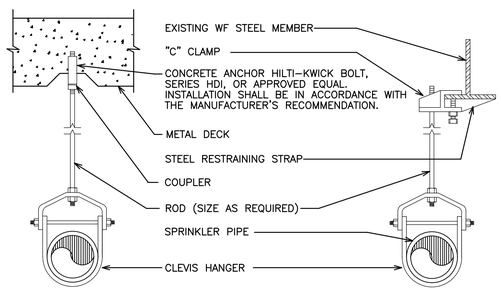

NOTES:

1. CLEVIS HANGERS REQUIRED ON PIPING LARGER THAN 1"
2. GENERAL PURPOSE HANGERS MAY BE USED ON 1" SPRINKLER PIPING ONLY.
3. ANY DAMAGED OR MISSING FIREPROOFING TO BE REPAIRED / REPLACED.
4. HANGER, ROD, SLEEVE, & INSERT SHALL BE DIPPED IN ZINC CHROMATE PRIMER PRIOR TO INSTALLATION.

ROD SCHEDULE	
PIPE SIZE	ROD SIZE
1/2" TO 4"	3/8"
5" TO 8"	1/2"
10" TO 12"	5/8"

TYPICAL HANGER DETAILS

NOT TO SCALE

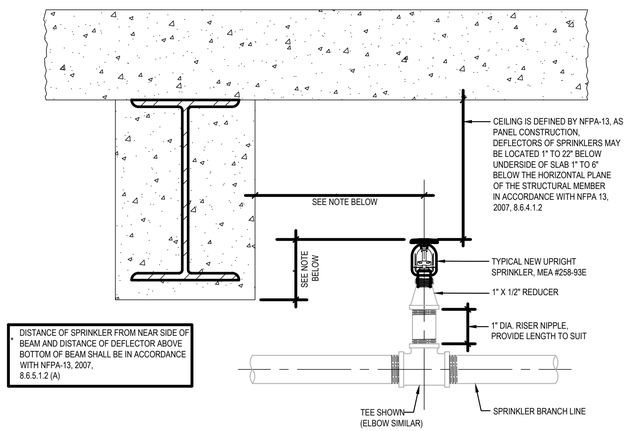

TYPICAL UPRIGHT SPRINKLER - NO SUSPENDED CEILING

NOT TO SCALE

FP-107

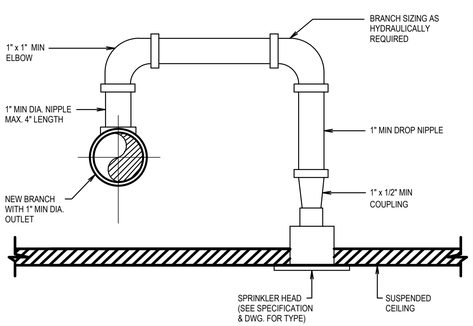

SPRINKLER HEAD CONNECTION FOR SUSPENDED CEILING

NOT TO SCALE

FP-101

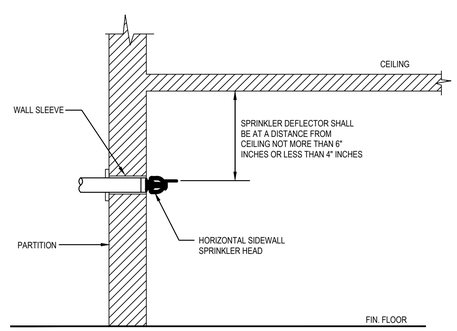

HORIZONTAL TYPE SIDE WALL SPRINKLER HEAD DETAIL

NOT TO SCALE

FP-109

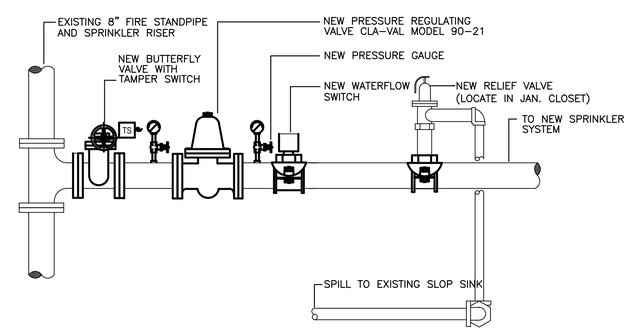

NEW FLOOR CONTROL VALVE ASSEMBLY WITH P.R.V.

NOT TO SCALE

TO THE BEST KNOWLEDGE, BELIEF AND PROFESSIONAL JUDGEMENT, THESE PLANS AND SPECIFICATIONS ARE IN COMPLIANCE WITH THE 2020 ENERGY CONSERVATION CONSTRUCTION CODE OF NEW YORK STATE.

ARCHITECT

di Domenico + Partners LLP

Architecture
Landscape Architecture
Planning

3743 Crescent Street, 3rd Floor
Long Island City, New York 11101
Tel 212-337-0400
Fax 212-337-3567

CIVIL PLANNING ENGINEER

JMC Planning Engineering Landscape Architecture & Land Surveying, PLLC
120 Bedford Road
Armonk, New York 10504
Tel 914-273-5225
Fax 914-273-2102

MEP ENGINEER

BURNS ENGINEERING, PC.
1261 Broadway, Suite 708
New York, New York 10001
Tel 212-962-3503

STRUCTURAL ENGINEER

GEI50
1385 Broadway, 20th FL
New York, New York 10018
Tel 212-687-8282

MANHATTAN BEER DISTRIBUTORS
20 DUNNIGAN DRIVE
SUFFERN, NEW YORK

KEY PLAN

REV	DESCRIPTION	DATE
	ISSUED FOR DOB SUBMISSION	09/10/2021
	ISSUED FOR BID	10/15/2021

DRAWN BY :	M.ESPINAL
CHECKED BY :	J.CLARK
APPROVED BY :	J.MIZRAHI
DATE :	04/16/21
SCALE :	NOT TO SCALE

DRAWING TITLE :

FIRE PROTECTION DETAILS

DWG NUMBER :

F-501

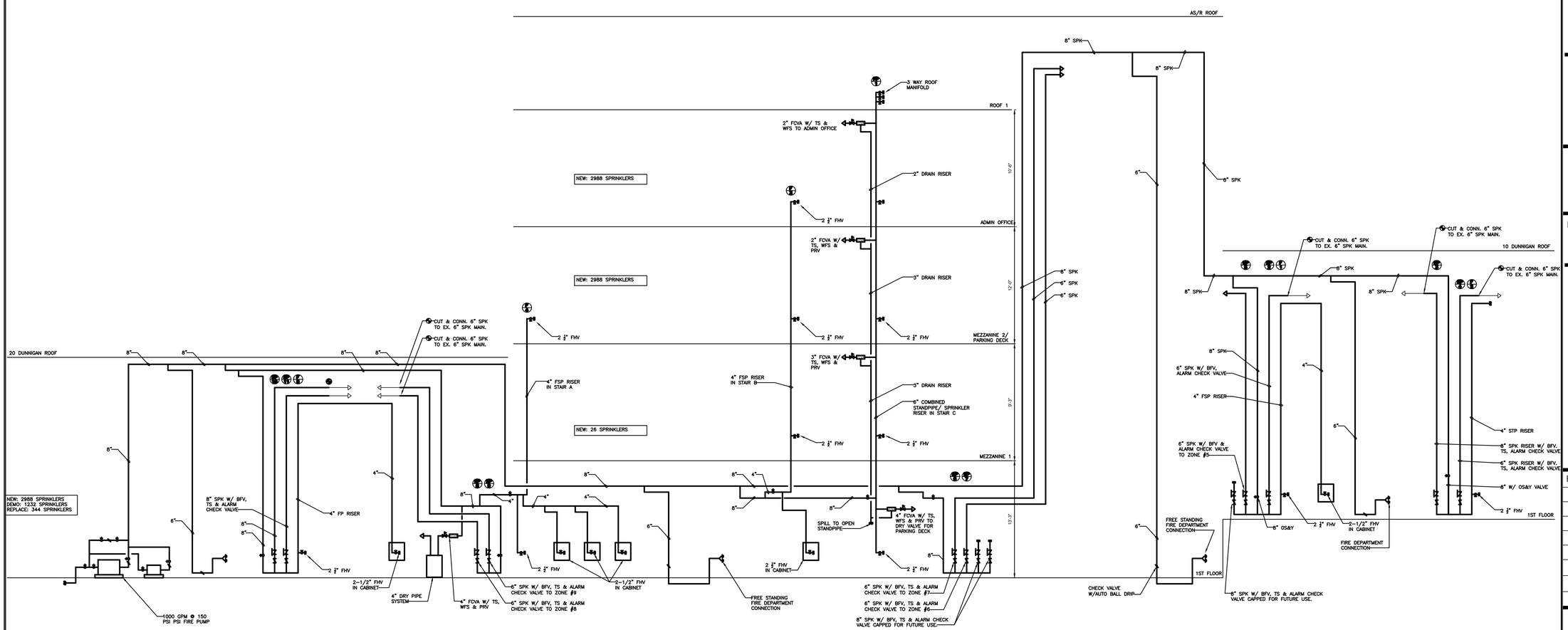

TO THE BEST KNOWLEDGE, BELIEF AND PROFESSIONAL JUDGEMENT, THESE PLANS AND SPECIFICATIONS ARE IN COMPLIANCE WITH THE 2020 ENERGY CONSERVATION CONSTRUCTION CODE OF NEW YORK STATE.

ARCHITECT

di Domenico + Partners LLP

Architecture
Landscape Architecture
Planning

3743 Crescent Street, 3rd Floor
Long Island City, New York 11101
Tel 212-337-0400
Fax 212-337-3567

CIVIL PLANNING ENGINEER

JMC Planning Engineering Landscape Architecture & Land Surveying, PLLC
120 Bedford Road
Armonk, New York 10504
Tel 914-273-5225
Fax 914-273-2102

MEP ENGINEER

BURNS ENGINEERING, PC.
1261 Broadway, Suite 708
New York, New York 10001
Tel 212-962-3503

STRUCTURAL ENGINEER

GEI50
1385 Broadway, 20th FL
New York, New York 10018
Tel 212-687-8282

MANHATTAN BEER DISTRIBUTORS
20 DUNNIGAN DRIVE
SUFFERN, NEW YORK

KEY PLAN

REV	DESCRIPTION	DATE
	ISSUED FOR DOB SUBMISSION	09/10/2021
	ISSUED FOR BID	10/15/2021

DRAWN BY :	M.ESPINAL
CHECKED BY :	J.CLARK
APPROVED BY :	J.MIZRAHI
DATE :	04/16/21
SCALE :	NOT TO SCALE

DRAWING TITLE :

FIRE PROTECTION RISER DIAGRAM

DWG NUMBER :

F-701

FIRE PROTECTION SPECIFICATION

PART 1 GENERAL

1.01 GENERAL REQUIREMENTS

A. PROVIDE ALL SPRINKLER AND STANDPIPE WORK SHOWN ON THE CONTRACT DOCUMENTS. ALL WORK SHALL COMPLY WITH THE REQUIREMENTS OF THE INTERNATIONAL BUILDING CODE AS ADOPTED BY NEW YORK STATE, NFPA 13-2013, NFPA 14-2013, LANDLORD'S BUILDING STANDARDS, AND ALL AUTHORITIES HAVING JURISDICTION (AHJ). APPLICABLE NATIONAL, STATE AND LOCAL CODES, LAWS AND REGULATIONS GOVERNING OR RELATING TO ANY PORTION OF THIS WORK SHALL BE INCORPORATED INTO AND MADE A PART OF THESE SPECIFICATIONS.

1.02 SCOPE OF WORK

A. INSTALL STANDPIPE SYSTEM, AUTOMATIC SPRINKLERS AND PIPING IN ACCORDANCE WITH THE CONTRACT DOCUMENTS, UNDERWRITERS' REQUIREMENTS, THE LOCAL AND STATE BUILDING CODES AND OTHER AUTHORITIES HAVING JURISDICTION. CONNECT NEW PIPING TO EXISTING WHERE SHOWN ON THE FLOOR PLAN. TEST ALL NEW WORK IN THE PRESENCE OF THE OWNERS' REPRESENTATIVE AND ALL AUTHORITIES HAVING JURISDICTIION REMOVE EXISTING SPRINKLER HEADS AND PIPING WHERE SHOWN ON THE PLAN.

B. INSTALL NEW STANDPIPE SYSTEM, NEW SPRINKLERS HEADS AND PIPING WHERE SHOWN ON THE CONTRACT DRAWINGS. FURNISH ALL LABOR, MATERIALS, EQUIPMENT, APPLIANCES AND PERFORM ALL OPERATIONS REQUIRED FOR A COMPLETE SPRINKLER SYSTEM AS SPECIFIED HEREIN, INCLUDING, BUT NOT LIMITED TO, CONNECTION TO EXISTING PIPING, FITTINGS, HANGERS, SUPPORTS, SLEEVES, ESCUTCHEONS, SIGNS, CUTTING AND PATCHING. THE ENTIRE SYSTEM SHALL BE MADE COMPLETE IN EVERY RESPECT.

C. BEFORE SUBMITTING HIS BID, THE FIRE PROTECTION CONTRACTOR SHALL VISIT THE SITE AND SHALL FULLY FAMILIARIZE HIMSELF WITH THE STRUCTURAL LAYOUT OF THE EXISTING BEAMS IN RELATIONSHIP TO THE NEW HVAC DUCT LAYOUT AND NEW LIGHTING FIXTURES AND HUNG CEILING HEIGHTS AND BECOME FAMILIAR WITH THE DIFFICULTIES THAT WILL ATTEND THE EXECUTION OF THIS WORK. CONTRACTOR SHALL PERFORM THIS PRIOR TO SUBMITTING HIS BID. SUBMISSION OF A BID WILL BE CONSTRUED AS EVIDENCE THAT SUCH AN EXAMINATION HAS BEEN MADE, AND LATER CLAIMS WILL NOT BE RECOGNIZED FOR EXTRA LABOR, EQUIPMENT OR MATERIALS REQUIRED BECAUSE OF DIFFICULTIES ENCOUNTERED WHICH COULD HAVE BEEN FORESEEN HAD SUCH AN EXAMINATION BEEN MADE.

D. UPON REVIEW OF SPRINKLER/STANDPIPE DRAWINGS PRIOR TO SUBMITTING HIS PROPOSAL, THIS CONTRACTOR SHALL INFORM ARCHITECT AND/OR ENGINEER OF ANY DISCREPANCIES OR REQUEST CLARIFICATION IN WRITING, IF NECESSARY, CONCERNING THE INTENT OF THE PLANS AND SPECIFICATIONS TO PROVIDE A COMPLETE SPRINKLER INSTALLATION. LATER CLAIMS WILL NOT BE RECOGNIZED FOR EXTRA LABOR, EQUIPMENT OR MATERIALS SHOULD SUCH PROCEDURE NOT BE FOLLOWED.

E. PREPARE AND SUBMIT MANUFACTURERS DATA AND INSTALLATION SHOP DRAWINGS TO THE ENGINEER FOR REVIEW. INSTALLATION SHOP DRAWINGS SHALL BE COORDINATED WITH NEW WORK OF OTHER TRADES AND EXISTING CONDITIONS.

F. PREPARE AS-BUILT DRAWINGS INDICATING ACTUAL LOCATIONS OF FIRE HOSE VALVES AND CABINETS, SPRINKLER HEADS AND PIPING. AS-BUILT DRAWINGS SHALL BE SUBMITTED TO THE OWNER UPON COMPLETION OF INSTALLATION AND TESTING. SUBMIT THREE SETS OF PRINTS AND ONE SET OF REPRODUCIBLES. IN ADDITION, PROVIDE ON DISK TO OWNER THE AS-BUILT CONDITIONS IN AUTOCAD FORMAT.

G. REPAIR AND/OR REPLACE ARCHITECTURAL COMPONENTS WHICH MAY BECOME DAMAGED AS A RESULT OF SYSTEM INSTALLATION.

H. THE FIRE PROTECTION CONTRACTOR SHALL EXAMINE THE PREMISES BEFORE SUBMITTING HIS BID, AND SHALL THOROUGHLY FAMILIARIZE HIMSELF WITH CONDITIONS WHICH AFFECT HIS WORK. THE FIRE PROTECTION CONTRACTOR SHALL REPORT ANY CONDITIONS WHICH WOULD PREVENT THE INSTALLATION OF THE NEW WORK TO THE OWNER'S REPRESENTATIVE PRIOR TO THE START OF ANY INSTALLATION.

I. THE CONTRACTOR SHALL USE EXTREME CAUTION WHEN INSTALLING PIPING IN FINISHED WALLS, CEILINGS AND PARTITIONS.

J. INTERRUPTION OF EXISTING BUILDING SERVICES IN ORDER TO CONNECT NEW PIPING TO EXISTING SHALL BE MADE AT SUCH TIME AS TO CAUSE THE LEAST INTERFERENCE WITH ESTABLISHED BUILDING OPERATING PROCEDURE. THE CONTRACTOR SHALL NOT INTERRUPT THE SERVICE WITHOUT WRITTEN PERMISSION OF BUILDING MANAGEMENT. LOCATION AND SIZES OF ALL EXISTING PIPING SHALL BE VERIFIED IN THE FIELD.

K. LOCATION AND SIZES OF ALL EXISTING PIPING SHALL BE VERIFIED IN THE FIELD.

L. CLEAN-UP AND RUBBISH REMOVAL FROM THE JOB SITE DIRECTLY RELATED TO AND AS A RESULT OF THIS CONTRACT SHALL BE DONE DAILY AS WORK PROGRESSES AS NOT TO CAUSE INTERFERENCE WITH THE NORMAL BUILDING OPERATION.

M. FURNISH ALL LABOR AND MATERIALS FOR ALL TESTS AS REQUIRED BY CODES OR AUTHORITIES HAVING JURISDICTION.

N. THE CONTRACTOR SHALL OBTAIN AND PAY FOR ALL PERMITS AND OBTAIN ALL APPROVALS REQUIRED BY ALL AUTHORITIES HAVING JURISDICTION.

O. THE NEW STANDPIPE AND SPRINKLER SYSTEM SHALL BE CONNECTED TO THE EXISTING PIPING AS SHOWN ON THE CONTRACT DRAWINGS.

P. INSTALL NEW AUXILIARY FIRE STANDPIPE HOSE CABINETS AND PIPING IN ACCORDANCE WITH THE CONTRACT DOCUMENTS, UNDERWRITERS' REQUIREMENTS, THE LOCAL BUILDING CODE AND OTHER AUTHORITIES HAVING JURISDICTION. CONNECT NEW PIPING TO EXISTING WHERE SHOWN ON THE FLOOR PLAN. TEST ALL NEW WORK IN THE PRESENCE OF THE OWNERS' REPRESENTATIVE AND ALL AUTHORITIES HAVING JURISDICTION.

Q. INSTALL A SYSTEM OF NEW AUTOMATIC PREACTION SPRINKLERS AND PIPING IN ACCORDANCE WITH THE CONTRACT DOCUMENTS, UNDERWRITERS' REQUIREMENTS, THE LOCAL BUILDING CODE, AND PER LOCAL FIRE DEPARTMENT, AND OTHER AUTHORITIES HAVING JURISDICTION. TEST ALL NEW WORK IN THE PRESENCE OF THE OWNERS' REPRESENTATIVE AND ALL AUTHORITIES HAVING JURISDICTION.

1. INSTALLATION: THIS CONTRACTORS ELECTRICIAN SHALL BE FULLY FAMILIAR WITH THE OPERATION OF THE PRE-ACTION SYSTEM AND ITS INTERCONNECTION TO THE BUILDING'S CLASS "E" SYSTEM AND SHALL BE AVAILABLE FOR ANY AND ALL TESTS OR DEMONSTRATIONS AS REQUIRED BY THE FIRE DEPARTMENT.

1.03 OTHER WORK INCLUDED

A. ALL PRIME PAINTING AND FACTORY APPLIED FINISHES.

B. ROUGH CUTTING

C. ROUGH PATCHING

1.04 QUALITY ASSURANCE

A. ALL PIPES SHALL BE MARKED TO INDICATE MANUFACTURER AND ASTM STANDARD. EACH FULL PIPE LENGTH SHALL HAVE THE MANUFACTURER'S NAME CAST, STAMPED OR ROLLED ON.

B. EACH FITTING SHALL HAVE THE MANUFACTURER'S SYMBOL AND PRESSURE RATING CAST, STAMPED OR ROLLED ON.

C. ALL NEW COMPONENTS OF THE STANDPIPE AND SPRINKLER SYSTEMS MUST CONFORM TO NFPA 13, NFPA 14 AND LOCAL BUILDING CODES, ASTM AND NEMA. ALL NEW PIPING AND SPRINKLER HEADS MUST BE U.L. LISTED AND FACTORY MUTUAL AND APPROVED.

D. ALL GROOVED JOINTS COUPLINGS, FITTINGS, VALVES, AND SPECIALTIES SHALL BE THE PRODUCTS OF A SINGLE MANUFACTURER. GROOVING TOOLS SHALL BE OF THE SAME MANUFACTURER AS THE GROOVED COMPONENTS.

1.05 SUBMITTALS

A. PRIOR TO PURCHASING EQUIPMENT, SUBMIT A LIST OF ALL PROPOSED PIPING MATERIALS AND EQUIPMENT.

B. SUBMIT COMPLETE BACK-UP MATERIAL WHERE MANUFACTURING SPECIFICATION STANDARDS OF PROPOSED MATERIAL DIFFER FROM THOSE SPECIFIED.

C. WHERE MANUFACTURER'S CATALOG INFORMATION DOES NOT SATISFACTORY DESCRIBE MATERIALS, ENGINEERING DESIGN, QUALITY OF CONSTRUCTION OR AESTHETICS OF PROPOSED MATERIALS, SAMPLES MUST BE SUBMITTED AS REQUESTED AT NO ADDITIONAL COST TO THE OWNER.

D. MANUFACTURER'S SPECIFICATIONS AND ENGINEERING DATA SHALL CONSIST OF A COMPLETE DESCRIPTION OF MATERIALS, PARTS, DEVICES, FINISHES AND PERFORMANCE.

E. SUBMIT HYDRAULIC CALCULATIONS FOR REVIEW WITH SPRINKLER SYSTEM LAYOUT SHOP DRAWINGS.

F. SPRINKLERS SHALL BE REFERRED TO ON DRAWINGS AND SHALL BE SPECIFICALLY IDENTIFIED BY THE LISTED MANUFACTURER'S STYLE OR SERIES DESIGNATION. TRADE NAMES AND ABBREVIATIONS ARE NOT PERMITTED.

1.06 MATERIAL DELIVERY, STORAGE AND HANDLING

A. THE FIRE PROTECTION CONTRACTOR SHALL BE RESPONSIBLE FOR THE ON-TIME DELIVERY OF HIS MATERIALS.

B. THE FIRE PROTECTION CONTRACTOR SHALL BE RESPONSIBLE FOR THE SAFE STORAGE OF ALL HIS MATERIALS EITHER ON THE SITE AS DESIGNATED BY THE OWNER'S REPRESENTATIVE OR IN HIS OWN WAREHOUSE.

C. ANY MATERIALS DAMAGED DURING HANDLING, STORAGE OR INSTALLATION SHALL BE REPLACED OR REPAIRED BY THE FIRE PROTECTION CONTRACTOR AT NO COST TO THE OWNER.

1.07 GUARANTEE

A. THE MANUFACTURER OF MATERIALS AND INSTALLER FOR THE WORK OF THIS CONTRACT SHALL, AS PART OF THIS CONTRACT, GUARANTEE AND CERTIFY THAT ALL NEW WORK IS FREE FROM DEFECTIVE WORKMANSHIP AND MATERIALS FOR A PERIOD OF ONE YEAR FROM DATE OF OWNER'S FINAL ACCEPTANCE. FINAL ACCEPTANCE BY THE OWNER SHALL BE THE DATE OF THE FINAL PAYMENT TO THE CONTRACTOR.

1.08 SHOP DRAWINGS

A. THE FIRE PROTECTION CONTRACTOR SHALL BE RESPONSIBLE FOR SUBMITTING SHOP DRAWINGS OF THE NEW STANDPIPE AND SPRINKLER WORK TO THE ENGINEER FOR REVIEW PRIOR TO FABRICATION. THE STANDPIPE/SPRINKLER DRAWING SHALL SHOW FIRE HOSE VALVES, SPRINKLER PIPING AND HEAD LOCATIONS, IN COORDINATION WITH ALL EXISTING CONDITIONS. SUBMIT SHOP DRAWINGS IN TIME TO ALLOW ONE WEEK REVIEW PERIOD. STANDPIPE/SPRINKLER PLANS SHALL CONSIST OF FULLY DIMENSIONED DRAWINGS FOR THE NEW WORK INCLUDING RELATED EXISTING PIPING, COMPONENTS AND SPRINKLER HEADS. SHOP DRAWINGS SHALL BE SUBMITTED IN QUANTITIES AS DIRECTED BY THE ARCHITECT.

B. SUBMIT SHOP DRAWINGS AND/OR SAMPLES OF SPRINKLER HEADS, ESCUTCHEON PLATES, PIPES, FITTINGS, HANGERS AND SLEEVES. SUBMIT HYDRAULIC CALCULATIONS FOR REVIEW WITH SPRINKLER SYSTEM LAYOUT SHOP DRAWINGS. SUBMITTALS SHALL INCLUDETAMPER SWITCHES, INSPECTOR'S TEST DRAIN AND WATER FLOW SWITCH.

C. SUBMIT SHOP DRAWINGS OF PRE-ACTION SYSTEM LAYOUTS, COMPONENTS AND WIRING DIAGRAMS.

D. UPON REQUEST, THE ENGINEER MAY FURNISH DESIGN DRAWINGS TO THE CONTRACTOR TO AID IN DEVELOPMENT OF PIPING SHOP DRAWINGS. THESE SHALL BE FURNISHED IN THE SAME FORMAT FOR WHICH THE DESIGN DRAWINGS WERE CREATED.

1.09 SUBSTITUTION

A. THE PRODUCTS AND/OR MATERIALS LISTED IN THESE SPECIFICATIONS REPRESENT DESIRED MATERIALS AND CONSTRUCTION STANDARDS FOR THE VARIOUS ITEMS OF WORK. MANUFACTURER NAMES AND MODEL NUMBERS ARE USED TO DESCRIBE TYPES, STYLES AND QUALITY MATERIALS SUBMITTED FOR APPROVAL OTHER THAN SPECIFIED HEREIN MUST MEET OR EXCEED THESE STANDARDS.

PART 2 MATERIALS

2.01 SLEEVES

A. PROVIDE SLEEVES FOR ALL PIPES PASSING THROUGH WALLS. SLEEVES WITHIN FURRED OUT ENCLOSURES, THROUGH STUD PARTITIONS AND BLOCK WALLS SHALL BE 18 GAUGE GALVANIZED SHEETMETAL.

B. PROVIDE OPENINGS WITH AN I.D. AT LEAST 2" GREATER THAN THE OUTSIDE OF THE PIPE SERVED. PASSING THROUGH SLEEVE OR MINIMUM OF 1" CLEARANCE BETWEEN.

C. PACK THE SPACE BETWEEN PIPES AND SLEEVES WITH FIBER-GLASS AND FINISH WITH NON-HARDENING MASTIC OR SILICONE SEALANT.

D. SLEEVES THROUGH WALLS AND PARTITIONS SHALL BE EQUAL TO THE DEPTH OF CONSTRUCTION AND TERMINATED FLUSH WITH FINISHED SURFACES.

E. SLEEVE SIZES SHALL BE TWO PIPE SIZES LARGER THAN THE PIPE SERVED.

2.02 ESCUTCHEONS

A. PROVIDE ESCUTCHEON ON ALL EXPOSED PIPING PASSING THROUGH WALLS, PARTITIONS AND CEILINGS.

B. ESCUTCHEONS SHALL BE HELD IN PLACE BY SET SCREWS.

C. ESCUTCHEON APPLICATION SCHEDULE:

D. LOCATION ESCUTCHEON MATERIAL

E. FINISH SPACE CHROME PLATED BRASS

F. UNFINISHED SPACE PLAIN BRASS OR CAST IRON

2.03 SPRINKLER PIPING AND FITTINGS

A. PIPING 2” AND BELOW SHALL BE SCHEDULE 40 STANDARD WEIGHT BLACK STEEL PIPE CONFORMING TO ASTM A 795. PIPING SHALL BE THREADED OR GROOVED FOR MECHANICAL COUPLINGS.

1. VICTAULIC FIRELOCK IGS SYSTEM WITH “INSTALLATION-READY™ FITTINGS AND COUPLINGS MAY BE USED FOR 1” SCHEDULE 10 AND SCHEDULE 40 CARBON STEEL PIPE IN FIRE PROTECTION APPLICATIONS. SYSTEM RATED FOR A WORKING PRESSURE TO 365 PSI.
   - (a) GROOVE: IGS “INNOVATIVE GROOVE SYSTEM” GROOVE WITH SHORTENED “A” DIMENSION AND TAPERED GROOVE BACKSIDE FOR EASE OF INSTALLATION.
   - (b) GROOVING TOOL: VICTAULIC RG2100, WITH IGS CONFIRMATION GAUGE.
   - (c) FITTINGS:
     - a) DUCTILE IRON HOUSING CONFORMING TO ASTM A-536, GRADE 65-45-12. ORANGE ENAMEL COATED OR GALVANIZED.
     - b) VICTAULIC STYLE 101 (90-DEGREE ELBOW), STYLE 102 (TEE), AND STYLE 108 (COUPLING) WITH INSTALLATION-READY™ ENDS.
     - c) STYLE 108 SINGLE-BOLT COUPLING PROVIDED WITH EPDM TYPE A PRESSURE RESPONSIVE GASKET WITH VIC-PLUS LUBRICANT, AND ASTM A449 COMPLIANT ELECTROPLATED STEEL BOLT AND NUT. CRMO ALLOY STEEL COUPLING LINKAGE.

2. THREAD X GROOVE ADAPTER FITTINGS AND WELDED OUTLETS WITH IGS GROOVED END, ASTM A53, GRADE A.

3. VICTAULIC FIRELOCK INSTALLATION-READY FITTINGS FOR SCHEDULE 10 AND SCHEDULE 40 GROOVED END CARBON STEEL PIPING IN FIRE PROTECTION APPLICATIONS SIZES 1¼” THRU 2½”. FITTINGS SHALL CONSIST OF A DUCTILE IRON HOUSING CONFORMING TO ASTM A-536, GRADE 65-45-12, WITH INSTALLATION-READY ENDS, ORANGE ENAMEL COATED. FITTINGS COMPLETE WITH PRELUBRICATED GRADE “E” EPDM TYPE 'A' GASKET; AND ASTM A449 ELECTROPLATED STEEL BOLTS AND NUTS. SYSTEM SHALL BE UL LISTED FOR A WORKING PRESSURE TO 365 PSI.

B. PIPING 2 ½” AND ABOVE SHALL BE SCHEDULE 10 STEEL PIPE CONFORMING WITH ASTM A 795 WITH VICTAULIC COUPLINGS.

C. STANDARD WEIGHT CAST IRON FITTINGS SHALL BE 175 PSIG WWP IN ACCORDANCE WITH NFPA 13 AS AMENDED BY THE LOCAL BUILDING CODE. FITTINGS SHALL BE THREADED OR GROOVED FOR MECHANICAL COUPLINGS.

D. PRE-ACTION AND DRY PIPE SYSTEMS PIPING: SPRINKLER PIPING 2½" AND ABOVE SHALL BE SCHEDULE 10 GALVANIZED STEEL PIPE WITH VICTAULIC COUPLINGS. SPRINKLER PIPING 2" AND BELOW SHALL BE SCHEDULE 40 GALVANIZED STEEL PIPE. ALL FITTINGS AND FLANGES SHALL BE AMERICAN STANDARD GALVANIZED STEEL SPRINKLER FITTINGS, FLANGED OR SCREWED AS REQUIRED, DESIGNED AND MANUFACTURED FOR A WATER WORKING PRESSURE OF 175 POUNDS.

2.04 MECHANICAL COUPLINGS

A. THE FOLLOWING FIRE PROTECTION COUPLINGS ARE TAKEN FROM THE CATALOG OF VICTAULIC AND ARE REPRESENTATIVE OF THE STYLE AND CONSTRUCTION REQUIRED (2" AND LARGER). ASTM A449 COMPLIANT NUTS AND BOLTS USED WITH MECHANICAL COUPLINGS SHALL BE ZINC-ELECTROPLATED.

B. FLEXIBLE - 75, 77 INSTALLATION-READY 177 (BASED ON PSI REQUIREMENTS)

C. RIGID: COUPLING HOUSINGS WITH OFFSETTING, ANGLE-PATTERN BOLT PADS SHALL BE USED TO PROVIDE SYSTEM RIGIDITY AND SUPPORT AND HANGING IN ACCORDANCE WITH NFPA-13, FULLY INSTALLED AT VISUAL PAD-TO-PAD OFFSET CONTACT. COUPLINGS THAT REQUIRE GAPPING OF BOLT PADS OR SPECIFIC TORQUE RATINGS FOR PROPER INSTALLATION ARE NOT PERMITTED. INSTALLATION-READY, FOR DIRECT STAB INSTALLATION WITHOUT FIELD DISASSEMBLY.

D. FIRELOCK RIGID - INSTALLATION READY 009N

E. INSTALLATION-READY STYLE 107

F. STYLE 920 / 920N

G. STYLE 922

2.05 THE FOLLOWING PRODUCTS ARE NOT ACCEPTABLE:

A. FIT STYLE 96, 963, 969, 719, 966, 960, & 929

2.06 HANGERS AND SUPPORTS

A. HANGERS FOR THE NEW HORIZONTAL PIPES SHALL BE LOCATED AT EVERY 12'-0" ON CENTER. BRANCH RUNOUTS WITHOUT HANGERS SHALL NOT EXCEED 2'-0" IN LENGTH.

B. CHAIN STRAPS, PERFORATED BARS OR WIRE HANGERS SHALL NOT BE PERMITTED.

C. PIPE HANGERS SHALL BE FASTENED ONLY TO THE BUILDING STRUCTURE. WHERE PIPING IS TO BE HUNG FROM EXISTING CONCRETE DECK, INSTALL A "HILTI" OR OTHER APPROVED EXPANSION BOLT.C-CLAMPS MUST BE INSTALLED WITH RETAIN STRAPS.

D. ALL ANCHORS INSTALLED IN SHALL HAVE AN ICC-ES LISTING.(ADD IF REQUIRED) PROVIDE SEISMIC RESTRAINTS FOR ALL PIPING SYSTEMS AND EQUIPMENT AS REQUIRED BY LOCAL AND STATE CODES. SUBMIT SHOP DRAWINGS SIGNED AND SEALED BY A LICENSED PROFESSIONAL ENGINEER.

2.07 SLEEVE FIRE STOPPING

A. ALL SLEEVES THROUGH RATED WALLS OR PARTITIONS SHALL FORM A U.L (UL 1479 & ASTM E814 ASTM TESTED) CLASSIFIED FIRESTOP CAPABLE OR RETURNING THE WALL OR PARTITION BACK TO ITS UNPENETRATED FIRE RESISTANCE.

B. FIRESTOPPING CAULK SHALL BE SIMILAR TO 3M CP 25WB & CAULK.

C. FIRESTOPPING WRAP SHALL BE SIMILAR TO 3M FS-195 + WRAP/STRIP

2.08 SPRINKLER HEADS

A. PROVIDE AUTOMATIC SPRINKLER HEADS OF FINISH AND TYPE AS APPROVED BY THE OWNER AND THE AUTHORITIES AND INSURING AGENCIES HAVING JURISDICTION. ALL NEW SPRINKLER HEADS SHALL BE "QUICK RESPONSE TYPE" WITH STANDARD 1/2" DISCHARGE ORIFICE (5.62 K FACTOR) AND SHALL BE OF BRONZE CONSTRUCTION, UL LISTED/FM APPROVED.

B. SPRINKLER HEADS SHALL BE AS MANUFACTURED BY GLOBE SPRINKLER CORPORATION, RELIABLE AUTOMATIC SPRINKLER CO., VICTAULIC AND VIKING SPRINKLER CORPORATION OR APPROVED EQUAL.

C. SPRINKLERS SHALL BE GLASS BULB TYPE, WITH HEX SHAPED WRENCH BOSS INTEGRALLY CAST INTO THE SPRINKLER BODY TO REDUCE THE RISK OF DAMAGE DURING INSTALLATION. (WRENCHES SHALL BE PROVIDED BY THE SPRINKLER MANUFACTURER THAT DIRECTLY ENGAGE THE CAST WRENCH BOSS.) BASIS OF DESIGN: VICTAULIC.

D. FINISHES: ALL SPRINKLER HEAD AND COVERPLATE FINISHES SHALL BE AS SPECIFIED BY ARCHITECT.

E. ALL NEW HEADS SHALL CONFORM TO THE ACTUAL CONDITION REQUIREMENTS.

F. WET SYSTEMS - AREAS WITH NO HUNG CEILING - AUTOMATIC UPRIGHT AND PENDENT HEADS SHALL BE RELIABLE AUTOMATIC SPRINKLER CO. MODEL F1FR, OR VICTAULIC V2704-08, CHROME PLATED FINISH.

G. WET SYSTEMS - GYP. BD. OR ACOUSTICAL CEILING TILE - CONCEALED PENDENT AUTOMATIC SPRINKLER HEADS SHALL BE RELIABLE AUTOMATIC SPRINKLER CO. MODEL G5-56, OR VICTAULIIC V3802, WHITE COVER PLATE.

H. WET SYSTEMS - ACOUSTICAL CEILING TILE W/SURFACE MOUNTED LIGHTS - PENDENT SPRINKLER HEADS WITH DEEP BELL ESCUTCHEONS-RELIABLE MODEL 'GFR' OR VICTAULIC V2708 WITH CHROME PLATED HB ESCUTCHEON.

I. WET SYSTEMS -SIDEWALL APPLICATIONS - HORIZONTAL SIDEWALL SPRINKLER HEADS WITH RECESSED F1 ESCUTCHEON - RELIABLE MODEL 'F1FR56' OR VICTAULIC V2710 WITH RECESSED ESCUTCHEON SHALL BE STANDARD CHROME PLATED FINISH.

J. WET SYSTEM -CONTROL MODE DENSITY AREA SPRINKLERS - WAREHOUSE AND STORAGE AREAS - AUTOAMTIC UPRIGHT AND PENDANT HEADS SHALL BE RELIABLE AUTOMATIC SPRINKLER CO. MODEL -

K. DRY OR PREACTION SYSTEMS - GYP. BD. OR ACOUSTICAL CEILING TILE - CONCEALED DRY PENDENT AUTOMATIC SPRINKLER HEADS SHALL BE RELIABLE AUTOMATIC SPRINKLER MODEL G5-56 OR VICTAULIC V33 DRY PENDENT. USE THIS SPRINKLER HEAD FOR PRE-ACTION AND DRY TYPE SPRINKLER SYSTEM APPLICATIONS.

1. VICTAULIC VICFLEX DRY SPRINKLER ALLOWED IN LIEU OF RIGID CONNECTIONS TO DRY SPRINKLER HEADS, A VICTAULIC VICFLEX™ DRY SPRINKLER, MODEL VS1, MAY BE USED. THE SPRINKLER SHALL PROVIDE A VERTICAL OR HORIZONTAL FLEXIBLE CONNECTION WITH A BEND RADIUS TO 2”, AND ALLOW FOR UP TO 4 BENDS.

L. DRY OR PREACTION SYSTEMS - ACOUSTICAL CEILING TILE W/SURFACE MOUNTED LIGHTS - PENDENT SPRINKLER HEADS WITH DEEP BELL ESCUTCHEONS-RELIABLE MODEL 'F3QR' OR VICTAULIC V36 WITH CHROME PLATED HB ESCUTCHEON.

M. DRY OR PREACTION SYSTEMS - SIDEWALL APPLICATIONS - HORIZONTAL SIDEWALL SPRINKLER HEADS WITH RECESSED F1 ESCUTCHEON-RELIABLE MODEL 'F3QR' OR VICTAULIC V2710 W/ V27 RECESSED CHROME PLATED FINISH.

N. SPRINKLER HEADS WITHIN THE MECHANICAL, ELECTRICAL, TELEPHONE AND ELEVATOR MACHINE ROOMS AND WHERE ADDITIONALLY INDICATED SHALL BE RATED AT 200°F - 212°F.

O. ALL HEADS SHALL HAVE TEMPERATURE RATING OF 155°F OR 165°F UNLESS OTHERWISE NOTED.

P. SPRINKLER HEADS IN SKYLIGHTS SHALL HAVE AN INTERMEDIATE TEMPERATURE RATING.

Q. WHERE PARTIAL ALTERATION WORK OCCURS IN A ROOM OR SPACE THAT HAS EXISTING SPRINKLER TO REMAIN, THE NEW SPRINKLERS SHALL MATCH EXISTING.

2.09 AUXILIARY FIRE STANDPIPE SYSTEM

A. RECESSED FIRE HOSE CABINETS SHALL BE 20 GAUGE STEEL WITH DUO-PANEL W/ TEMPERED SAFETY GLASS DOOR AND POSITIVE LATCH DEVICE. CABINET SHALL BE SIMILAR TO POTTER ROEMER FIG. # 1106-DW.

B. HOSE RACK ASSEMBLY SHALL BE NYC CODE APPROVED WITH 125 FEET OF RUBBER LINED SYNTHETIC HOSE, BRASS FOG NOZZLE, 2-1/2" ANGLE HOSE VALVE, SIMILAR TO POTTER ROEMER FIG. #2712 NYFD.

C. FURNISH AND INSTALL AN ADJUSTABLE RESTRICTING DEVICE ON EACH FIRE HOSE VALVE. THE DEVICE SHALL BE SIMILAR TO POTTER ROEMER FIG. #2766.

D. PIPING SHALL BE SCHEDULE 40 BLACK STEEL WITH 500 PSI WWP STEEL FITTINGS. PIPING AND FITTINGS SHALL BE GROOVED FOR MECHANICAL COUPLINGS. FITTINGS SHALL BE AS MANUFACTURED BY VICTAULIC. MECHANICAL COUPLINGS SHALL BE VICTAULIC STYLE177' OR '77' OR INSTALLATION-READY RIGID STYLE 107N OR 009N.

E. PIPING FROM FIRE STAIR ENCLOSURE TO THE AUXILIARY HOSE CABINET SHALL BE ENCLOSED WITHIN A 2 HOUR FIRE RATED ENCLOSURE AS REQUIRED BY CODE. THIS CONTRACTOR SHALL INCLUDE THIS IN THEIR BID AND ALL COORDINATION THAT IS REQUIRED TO INSTALL THIS ENCLOSURE.

2.10 TAMPER SWITCHES

A. WHERE INDICATED ON THE DRAWINGS, FURNISH AND INSTALL VALVE TAMPER SWITCHES FOR SUPERVISION OF O.S.& Y. SHUT OFF VALVES. TAMPER SWITCHES SHALL BE SYSTEM SENSOR, ADT, ITT GRINNELL CORP., AUTO-CALL. ALTERNATE -VICTAULIC 705, 765 BUTTERFLY VALVE WITH INTERNAL TAMPER SWITCH OR APPROVED OTHER. ACTUATOR HOUSING SHALL BE WETHERPROOF.

B. THE BUTTERFLY VALVE SEAT SHALL BE PRESSURE RESPONSIVE, AND THE STEM OFFSET FROM THE DISC CENTERLINE TO PROVIDE COMPLETE 360-DEGREE CIRCUMFERENTIAL SEATING.

2.11 WATERFLOW DETECTOR

A. WHERE INDICATED ON THE DRAWINGS FURNISH AND INSTALL WATER FLOW ALARMS. WATER FLOW ALARMS SHALL BE PADDLE TYPE NON-CODED, RATED AT 120 VOLTS AD, 10 AMPS NORMALLY CLOSED SWITCH, ACME TYPE 430, SYSTEM SENSOR SERIES WDF OR APPROVED OTHER.

2.12 PRESSURE REDUCING VALVE

A. WHERE INDICATED ON THE DRAWINGS, PROVIDE U.L. LISTED / FM APPROVED, WATER PRESSURE REDUCING VALVE, ALL BRONZE CONSTRUCTION, BRONZE AND STAINLESS STEEL TRIM U.L. LISTED, 300 P.S.I. WORKING PRESSURE. VALVE SHALL BE VICTAULIC 867-42T AND 867-7UL OR CLA-VAL MODEL 90-21.

2.13 FLOOR CONTROL DRAIN VALVE ASSEMBLY

A. SPRINKLER COMBINATION TEST AND DRAIN VALVE SHALL BE AGF MODEL #1000 BRONZE TYPE, OR VICTAULIC 747M RISER MANIFOLD.,

B. FURNISH AND INSTALL A ONE INCH INSPECTORS TEST VALVE ASSEMBLY WITH SIGHT GLASS AND A 1¼" SYSTEM DRAIN VALVE ALL IN ACCORDANCE WITH NFPA-13. ALL ASSOCIATED DRAINAGE PIPING SHALL BE HARD PIPE TO THE SPRINKLER DRAIN RISER, OR TO SHALL SPILL INDIRECTLY TO A DESIGNATED WASTE RECEPTOR IF ASSEMBLY IS NOT LOCATED IN THE STAIR.

2.14 FLOOR CONTROL VALVE ASSEMBLY

A. IN LIEU OF INDIVIDUAL COMPONENTS, CONTRACTOR MAY INSTALL A MANUFACTURED COMBINATION FLOOR CONTROL VALVE ASSEMBLY SIMILAR TO GLOBE UNIVERSAL MANIFOLD CHECK (UMC) ASSEMBLY CONTAINING BUTTERFLY VALVE WITH TAMPER SWITCH, WATERFLOW SWITCH, CHECK VALVE, TEST AND DRAIN VALVE.

2.15 FIRE DEPARTMENT CONNECTION

A. SIAMESE BODY SHALL BE CROKER, OR APPROVED OTHER, MODEL NO. 6030 BOTTOM OUTLET, CAST BRASS BODY WITH TWO INLETS. INLET SIZES AND THREADS TO CONFORM TO LOCAL FIRE DEPARTMENT STANDARD.

B. SIAMESE WALL PLATE SHALL BE POLISHED CHROME PLATED CAST BRASS WITH CAST BRASS DOUBLE FEMALE SNOOTS WITH RIGID END 3" NPT X 2½”" PIN LUG HOSE THREAD, PIN LUG CAPS AND CHAINS.

C. WALL PLATE SHALL BE LETTERED “AUTOMATIC SPRINKLER.”

D. AT THE LOW POINT NEAR EACH FIRE DEPARTMENT CONNECTION, PROVIDE A 90-DEGREE ELBOW WITH DRAIN CONNECTION TO ALLOW FOR LOCALIZED SYSTEM DRAINAGE TO PREVENT FREEZING. BASIS OF DESIGN: VICTAULIC FIRELOCK #10-DR.

2.16 AUTOMATIC BALL DRIP

A. WHERE INDICATED ON THE DRAWINGS, FOR SIAMESE CONNECTIONS, PROVIDE A ¾” AUTOMATIC BALL DRIP, INSTALLED BETWEEN THE FIRE DEPARTMENT SIAMESE CONNECTION AND THE CHECK VALVE TO PREVENT LINE FROM FREEZING.

B. AUTOMATIC BALL DRIP SHALL BE CROKER NO. 6781, OR APPROVED OTHER.

2.17 ALARM CHECK VALVE

A. FOR THE WET PIPE SPRINKLER SYSTEM, PROVIDE VICTAULIC SERIES 751 ALARM CHECK WITH SERIES 752 RETARD CHAMBER OR RELIABLE AUTOMATIC SPRINKLER CO., OR APPROVED OTHER, MODEL "E" ALARM CHECK VALVE COMPLETE WITH VERTICAL ALARM TRIM PACKAGE AND A MODEL "E-1" RETARD CHAMBER. VALVE INTERNAL COMPONENTS SHALL BE REPLACEABLE WITH VALVE IN THE INSTALLED POSITION.

2.18 DETECTOR CHECK VALVE

A. WHERE INDICATED ON THE DRAWINGS, PROVIDE AMES COMPANY, INC. OR APPROVED OTHER, DETECTOR CHECK VALVE WITH 1” BY-PASS METER, METER SHALL BE APPROVED BY THE LOCAL WATER AUTHORITY.

B. DETECTOR CHECK VALVE SHALL BE PRECEDED AND FOLLOWED BY O.S. AND Y. GATE VALVES.

2.19 PRESSURE RELIEF VALVE

A. WHERE INDICATED ON THE DRAWINGS, PROVIDE U.L LISTED / F.M. APPROVED WATER PRESSURE RELIEF VALVE SET TO RELIEVE AT 10 P.S.I. ABOVE THE SETTING OF THE PRESSURE REDUCING VALVE SPECIFIED HERE-IN-BEFORE. PRESSURE RELIEF VALVE SHALL BE ZURN MANUFACTURING CORP., #P1000A OR APPROVED OTHER.

2.20 PRESSURE GAUGE

A. ASHCROFT SERIES 1079, OR APPROVED OTHER, 4I” DIAMETER, 0 - 200 PSI RANGE, 20 PSI INTERVALS.

2.21 O.S.&Y. GATE VALVE (CONTROL VALVE)

A. 1¼” VALVES SHALL BE STOCKHALM FIG. B-133 O.S.&Y.; 2½” STOCKHAM FIG. G-634 RISING STEM, O.S.&Y., SOLID WEDGE DISC WITH FLANGED ENDS, 175 PSI, U.L. LISTED, FM APPROVED. GROOVED END OS&Y GATE VALVES SHALL BE VICTAULIC SERIES 771; NON-RISING STEM GATE VALVE VICTAULIC SERIES 772.

2.22 BUTTERFLY VALVE (CONTROL VALVE)

A. WHERE INDICATED ON THE DRAWINGS, PROVIDE U.L. LISTED/ FM APPROVED. VICTAULIC SREIES 705 FIRELOCK BUTTERFLYY VALVE

2.23 AUTOMATIC FIRE PUMP

A. SCOPE

1. FURNISH AND INSTALL AN AUTOMATIC ELECTRIC FIRE PUMP WITH ACCESSORIES AS REQUIRED BY LOCAL AUTHORITIES HAVING JURISDICTION. THE FIRE PUMP AND CONTROLLER SHALL MEET ALL REQUIREMENTS OF THE NATIONAL FIRE PROTECTION ASSOCIATION (NFPA) PAMPHLET NO. 20 AND SHALL BE UNDERWRITERS LABORATORIES (UL) LISTED AND FACTORY MUTUAL (FM) APPROVED. THE CONTRACTOR SHALL FURNISH ALL INTERCONNECTING PIPING AND FITTINGS AS REQUIRED FOR A COMPLETE INSTALLATION IN ACCORDANCE WITH ALL CODE REQUIREMENTS.

B. FIRE PUMP MOTOR:

1. REFER TO SCHEDULE SHEET FOR FIRE PUMP MAKE, MODEL, PRESSURE, AND FLOW CHARACTERISTICS. THE PUMP SHALL ALSO DELIVER 150% OF RATED CAPACITY AT NOT LESS THAN 65% OF RATED HEAD. SHUT-OFF HEAD SHALL NOT EXCEED 140% OF RATED HEAD, EXCLUDING SUCTION PRESSURE. THE PUMP SHALL HAVE ANSI 125 LB. SUCTION AND DISCHARGE FLANGES.

2. THE PUMP SHALL BE IN-LINE CLOSE-COUPLED TO A HI/NEMA JM FRAME, VERTICAL, ECLECTIC MOTOR RATED 50 HP, 3500 RPM, 208 VOLT, 3 PHASE, 60 HZ, NEMA DESIGN B, ODP WITH 1.15 SERVICE FACTOR. LOCKED ROTOR CURRENT SHALL NOT EXCEED THE VALVES SPECIFIED IN NFPA PAMPHLET NO. 20. THE PUMP AND MOTOR SHALL BE FLOOR MOUNTED ON CAST IRON PEDESTAL.

C. FIRE PUMP CONTROLLER:

1. THE FIRE PUMP CONTROLLER, SHALL BE REDUCED VOLTAGE STARTER, U.L. LISTED AND FM APPROVED SPECIFICALLY FOR FIRE PUMP SERVICE. THE ENCLOSURE SHALL BE NEMA TYPE 2. THE CONTROLLER SHALL BE COMBINED MANUAL AND AUTOMATIC REDUCED VOLTAGE, WYE DELTA CLOSED TRANSITION TYPE RATED FOR THE HP SPECIFIED AND INCLUDING VOLTAGE SURGE ARRESTERS. THE CONTROLLER SHALL BE CAPABLE OF INTERRUPTING A SHORT CIRCUIT CURRENT AT LEAST EQUAL TO THE AVAILABLE SHORT CURRENT IN THE CONTROLLER SUPPLY CIRCUIT. THIS FIRE PUMP INSTALLATION REQUIRES AN INTERRUPTING CAPACITY, WITHSTAND RATING OF NOT LESS THAN 100,000 AMPS RMS SYMMETRICAL AT AN OPERATING VOLTAGE OF 208V.

2. THE CONTROLLER MUST BE CAPABLE OF PERFORMING OR CONTAIN THE FOLLOWING FEATURES:
   - (a) PRESSURE SWITCH
   - (b) AUTOMATIC START ON LOW PRESSURE
   - (c) TIMING RELAY FOR AUTOMATIC STOP, TO BE FIELD CHANGEABLE OR MANUAL STOP.

3. THE CONTROLLER SHALL BE FURNISHED WITH A PAIR OF AUXILIARY ALARM CONTACTS FOR INDICATION OF:
   - (a) PUMP RUN
   - (b) PHASE FAILURE
   - (c) PHASE REVERSAL

D. FITTINGS

1. ALL COMPONENTS ON THE DISCHARGE SIDE OF THE PUMP SHALL HAVE A RATED WORKING PRESSURE GREATER THAN PUMP SHUT-OFF HEAD PLUS MAXIMUM SUCTION PRESSURE. THE FOLLOWING ACCESSORIES AND FITTINGS SHALL BE:
   - (a) ECCENTRIC SUCTION REDUCER, IF REQUIRED.
   - (b) CONCENTRIC DISCHARGE INCREASER, IF REQUIRED.
   - (c) AUTOMATIC AIR RELEASE VALVE.
   - (d) CASING RELIEF VALVE.
   - (e) SUCTION AND DISCHARGE GAUGES.
   - (f) MAIN RELIEF VALVE.
   - (g) ENCLOSED CONE WITH SIGHT GLASS.
   - (h) HOSE VALVE HEAD WITH VALVE, CAPS, CHAINS AND DRAIN VALVE.
   - (i) PUMP BYPASS LINE.

E. JOCKEY PUMP

1. REFER TO SCHEDULE SHEET FOR FIRE PUMP MAKE, MODEL, PRESSURE, AND FLOW CHARACTERISTICS.

F. JOCK PUMP CONTROLLER

1. THE JOCKEY PUMP CONTROLLER SHALL BE IN A NEMA 2 ENCLOSURE WITH ACROSS-THE-LINE MAGNETIC STARTER, FUSIBLE DISCONNECT SWITCH, HOA SWITCH, PRESSURE SWITCH, CONTROL TRANSFORMER WITH FUSED SECONDARY AND RUNNING PERIOD TIMER.

G. PUMP MANUFACTURER'S FACTORY TESTS

1. THE FIRE PUMP SHALL BE HYDROSTATICALLY TESTED AT PRESSURE OF NOT LESS THAN ONE AND ONE HALF TIMES THE NO FLOW (SHUTOFF) HEAD OF THE PUMP'S MAXIMUM DIAMETER IMPELLER PLUS THE MAXIMUM ALLOWABLE SUCTION HEAD, BUT IN NO CASE LESS THAN 250 PSIG. CHARACTERISTIC CURVE OF PUMP PERFORMANCE, EFFICIENCY AND BRAKE HORSEPOWER SHALL BE DRAWN FROM THE TEST RESULTS AND FURNISHED TO THE CONSULTING ENGINEERING AND CONTRACTOR.

H. FIELD ACCEPTANCE TEST

1. A FIELD ACCEPTANCE PERFORMANCE TEST SHALL BE CONDUCTED UPON COMPLETION OF PUMP INSTALLATION. THE TEST SHALL BE MADE BY FLOWING WATER THROUGH CALIBRATED NOZZLES, APPROVED FLOW METERS OR OTHER ACCURATE DEVICES AS MAY BE SELECTED BY THE AUTHORITY HAVING JURISDICTION AND FURNISHED BY THE CONTRACTOR. THE TEST SHALL BE CONDUCTED AS RECOMMENDED IN NFPA PAMPHLET 20 BY THE CONTRACTOR, IN THE PRESENCE OF THE MANUFACTURER'S REPRESENTATIVE AND WITH THE AUTHORITY'S FINAL APPROVAL AND ACCEPTANCE. FAILURE TO SUBMIT DOCUMENTATION OF FACTORY AND FIELD TESTS WILL BE JUST CAUSE FOR EQUIPMENT REJECTION.

I. START-UP AND WARRANTY

1. THE PUMP MANUFACTURE'S REPRESENTATIVE SHALL HAVE SINGLE SOURCE RESPONSIBILITY FOR THE PUMPS AND COMPLETE CONTROL SYSTEM. START-UP SERVICES INCLUDING PUMP ALIGNMENT ADJUSTMENT AND FIELD CALIBRATION OF CONTROLS, OPERATOR INSTRUCTION AND SYSTEM WARRANTY SHALL INCLUDED IN THE PRICE FOR THE SYSTEM. THE WARRANTY SHALL BE 12 MONTHS FROM DATE OF START-UP NOT TO EXCEED 18 MONTHS FROM TIME OF SHIPMENT.

J. SERVICE CONTRACT

1. THE MANUFACTURER'S AUTHORIZED SERVICE REPRESENTATIVE SHALL PROVIDE A ONE (1) YEAR SERVICE CONTRACT. THE SERVICE CONTRACT PERIOD SHALL COMMENCE AFTER ACCEPTANCE OF THE EQUIPMENT. THE SERVICE CONTRACT SHALL INCLUDE A COMPLETE SYSTEM INSPECTION TWICE A YEAR INCLUDING: CHECK OF PROPER PUMP SEQUENCING AND ALARM ACTIVATION WITH ADJUSTMENTS, AS REQUIRED; AND REVIEW OF INSTRUCTIONS FOR OPERATING PERSONNEL, IF REQUESTED. ANY REQUIRED SERVICE WORK TO BE NOTED IN A FORMAL INSPECTION REPORT ALONG WITH A DETAILED PROPOSAL FOR THE REPAIRS. THE SERVICE REPRESENTATIVE SHALL PROVIDE 24 HOUR EMERGENCY SERVICE.

2.24 FIRE PUMP TEST CONNECTION

A. BODY SHALL BE CROKER 6800 SERIES, OR APPROVED OTHER MODEL, CAST BRASS BODY WITH NUMBER OF OUTLETS CORRESPONDING TO FIRE PUMP CAPACITY, POLISHED CHROME PLATED PLATE, ADAPTERS AND CAPS AND CHAINS.

B. WALL PLATE SHALL BE LETTERED “FIRE PUMP TEST.”

PART 3 EXECUTION

3.01 GENERAL INSTALLATION FOR NEW PIPING

A. INSTALLATION, AS STRAIGHT AND DIRECT AS POSSIBLE, FORMING RIGHT ANGLES OR PARALLEL LINES WITH BUILDING WALLS AND OTHER PIPES, AND NEATLY SPACED. PIPING SHALL BE INSTALLED SO THAT EVERY PORTION OF THE SYSTEM CAN BE ENTIRELY DRAINED.

B. THE STANDPIPE/SPRINKLERS DRAWING ARE GIVEN AS A GUIDE ONLY, AND THEREFORE, DO NOT RELIEVE THIS CONTRACTOR FROM PROVIDING AND INSTALLING ALL EQUIPMENT NECESSARY TO COMPLETE THE INSTALLATION ACCORDING TO THE CODE REQUIREMENTS.

C. DO NOT INSTALL PIPES OR OTHER APPARATUS IN A MANNER WHICH MAY INTERFERE WITH THE FULL SWING OF ANY DOOR.

D. WHERE SPRINKLERS ARE INSTALLED IN AREAS WITHOUT HUNG CEILING, INSTALL SPRINKLERS BOTH OVER AND UNDER EXISTING DUCTWORK 4'-0" AND LARGER IN WIDTH OR WHERE THE TOTAL AGGREGATE OF MULTIPLE DUCTS EXCEEDS 4'-0" IN WIDTH OR LENGTH.

E. THE ARRANGEMENTS, POSITIONS AND CONNECTIONS OF PIPES AND SPRINKLER HEADS INDICATED ON THE DRAWINGS SHALL BE FOLLOWED AS CLOSELY AS POSSIBLE, BUT THE RIGHT IS RESERVED BY THE OWNER TO CHANGE LOCATIONS AND ELEVATIONS TO ACCOMMODATE CONDITIONS WHICH MAY ARISE DURING THE PROGRESS OF THE WORK, WITHOUT ADDITIONAL COMPENSATION TO THE CONTRACTOR FOR SUCH CHANGES, PROVIDED THAT NO ADDITIONAL HEADS ARE REQUIRED AND CHANGES ARE REQUESTED PRIOR TO INSTALLATION.

F. REAM ALL PIPE SMOOTH BEFORE INSTALLATION. DO NOT BEND, SPLIT, FLATTEN OR INJURE PIPE IN ANY WAY. ANY PIPE CUT, DENTED OR DAMAGED SHALL BE REPLACED BY THIS CONTRACTOR WITHOUT ADDITIONAL EXPENSE TO THE OWNER.

G. PIPE THREADS SHALL BE MADE WITH THE BEST DIES AND TOOLS AVAILABLE. DURING THREADING THE PIPE SHALL BE SATURATED WITH SOLVENT TO ASSURE SHARP THREADS FREE OF BURRS AND HOLES.

H. ALL THREADED JOINTS SHALL BE MADE WITH TEFLON TAPE CAREFULLY PLACED ON THREADS OF PIPE AND NOT FITTINGS.

I. GROOVED JOINTS: INSTALL IN ACCORDANCE WITH THE MANUFACTURER'S LATEST PUBLISHED INSTALLATION INSTRUCTIONS. PIPE ENDS SHALL BE CLEAN AND FREE FROM INDENTATIONS, PROJECTIONS AND ROLL MARKS IN THE AREA FROM PIPE END TO (AND INCLUDING) GROOVE. GASKET SHALL BE MANUFACTURED BY THE COUPLING MANUFACTURER AND VERIFIED AS SUITABLE FOR THE INTENDED SERVICE. A FACTORY TRAINED REPRESENTATIVE (DIRECT EMPLOYEE) OF THE COUPLING MANUFACTURER SHALL PROVIDE ON-SITE TRAINING FOR CONTRACTOR'S FIELD PERSONNEL IN THE USE OF GROOVING TOOLS, APPLICATION OF GROOVE, AND PRODUCT INSTALLATION. THE REPRESENTATIVE SHALL PERIODICALLY VISIT THE JOB SITE AND REVIEW INSTALLATION TO ENSURE BEST PRACTICES IN GROOVED JOINT INSTALLATION ARE BEING FOLLOWED. CONTRACTOR SHALL REMOVE AND REPLACE ANY IMPROPERLY INSTALLED PRODUCTS.

J. INSTALL SPRINKLER HEADS IN ALL AREAS ON A TRUE AXIS LINE IN BOTH DIRECTIONS WITH A MAXIMUM DEVIATION FROM THE AXIS LINE OF 2” PLUS OR MINUS. IN ACOUSTICAL TILE CEILINGS, SPRINKLER HEADS SHALL BE INSTALLED IN CENTER OF TILE. AT THE COMPLETION OF THE INSTALLATION, REMOVE AND REINSTALL ANY HEADS FOUND TO BE EXCEED THE ABOVE MENTIONED TOLERANCES.

3.02 CLEANING AND PROTECTION

A. AS SOON AS NEW SPRINKLER HEADS ARE IN PLACE, COVER EACH HEAD WITH A SMALL PAPER BAG OF AN UNDERWRITER'S APPROVED TYPE, AND REMOVE IT ONLY AFTER ALL PAINTING IS COMPLETE. AFTER THE BAG IS REMOVED, CLEAN AND POLISH ALL HEADS.

B. PROTECT THE SYSTEM AGAINST FREEZING

C. THOROUGHLY BLOW OUT OR WASH OUT ALL NEW PIPING TO REMOVE ALL ACCUMULATION OF DIRT, CHIPS OR OTHER HARMFUL MATERIAL.

3.03 BUILDING DEPARMENT PERMITS AND CERTIFICATES

A. THE FIRE PROTECTION SHALL OBTAIN ALL REQUIRED PERMITS WITH THE LOCAL BUILDING DEPARTMENT AND BE RESPONSIBLE FOR OBTAINING FINAL APPROVALS WITH ALL AUTHORITIES HAVING JURISDICTION. PROVIDE A COPY OF ALL REQUIRED D.O.B. APPLICATIONS AND PERMITS TO THE PROPERTY MANAGER AND LANDLORD FOR THEIR RECORDS.

3.04 CUTTING AND PATCHING

A. DO ALL CUTTING NECESSARY FOR THE INSTALLATION OF SPRINKLER WORK. ACCURATELY LAYOUT WORK FOR WHICH CUTTING IS REQUIRED, SO AS TO AVOID UNNECESSARY LARGE OPENINGS. CUTTING OF BEAMS, JOISTS, FLOORS OR WALLS OF THE BUILDING WILL NOT BE PERMITTED EXCEPT AFTER RECEIVING APPROVAL OF THE BUILDING MANAGER.

B. ROUGH PATCHING WILL BE DONE BY THIS CONTRACTOR IN A MANNER TO ACCOMMODATE FINISHED PATCHING WORK. FINISHED PATCHING WILL BE DONE "UNDER ANOTHER SECTION OF THE SPECIFICATIONS".

3.05 UNIT PRICES

A. AMOUNTS INDICATED SHALL BE FOR WORK FULL INSTALLED COMPLETE WITH ALL ASSOCIATED COMPONENTS AND SHALL BE BINDING FOR THE DURATION OF THE PROJECT.

B. UNIT PRICES SHALL INCLUDE ALL RELATED GENERAL CONDITIONS, OVERHEAD, PROFIT, INSURANCE, LABOR, ENGINEERING, MATERIALS, AND SUPERVISION REQUIRED. UNIT PRICES TO BE TAKEN EQUALLY FOR ALL ADDS AND DEDUCTS TO THE CONTRACT DOCUMENTS.

C. UNIT PRICE QUOTATIONS SHALL, IN EACH CASE, BE FOR COMPLETE WORK, FURNISHED AND INSTALLED.

D. LIST OF UNIT PRICES REQUIRED:

1. SPRINKLERS - $ FOR EACH TYPE IN THE DOCUMENTS

2. SPRINKLER PIPING - $/LF FOR EACH SIZE REQUIRED

3.06 STOCK OF SPARE SPRINKLERS

A. A SUPPLY OF AT LEAST SIX SPARE SPRINKLERS (NEVER FEWER THAN SIX) SHALL BE MAINTAINED ON THE PREMISES SO THAT ANY SPRINKLER THAT HAVE OPERATED OR BEEN DAMAGED IN ANY WAY CAN BE PROMPTLY REPLACED.

B. A MINIMUM OF TWO SPRINKLERS OF EACH TYPE AND TEMPERATURE RATINGS SHOULD BE PROVIDED.

C. THE SPRINKLERS SHALL CORRESPOND TO THE TYPES AND TEMPERATURE RATINGS OF THE SPRINKLERS IN THE PROPERTY.

D. THE SPRINKLERS SHALL BE KEPT IN A CABINET LOCATED WHERE THE TEMPERATURE TO WHICH THEY ARE SUBJECTED WILL AT NO TIME EXCEED 100°F (38°C).

E. WHERE DRY SPRINKLERS OF DIFFERENT LENGTHS ARE INSTALLED, SPARE DRY SPRINKLERS SHALL NOT BE REQUIRED, PROVIDED THAT A MEANS OF RETURNING THE SYSTEM TO SERVICE IS FURNISHED.

F. THE STOCK OF SPARE SPRINKLERS SHALL INCLUDE ALL TYPES AND RATINGS SHALL BE AS FOLLOWS:

1. FOR PROTECTED FACILITIES HAVING UNDER 300 SPRINKLERS - NO FEWER THAN SIX SPRINKLERS

2. FOR PROTECTED FACILITIES HAVING 300 TO 1000 SPRINKLERS - NO FEWER THAN 12 SPRINKLERS

3. FOR PROTECTED FACITLITIES HAVING OVER 1000 SPRINKLERS - NO FEWER THAN 24 SPRINKLERS

G. A SPECIAL SPRINKLER WRENCH SHALL BE PROVIDED AND KEPT IN THE CABINET TO BE USED IN THE REMOVAL AND INSTALLATION OF SPRINKLERS. ONE SPRINKLER WRENCH SHALL BE PROVIDED FOR EACH TYPE OF SPRINKLER INSTALLED.

3.07 SPRINKLERS SHALL BE INSTALLED UNDER FIXED OBSTRUCTIONS OVER 4FT (1.2M) WIDE SUCH AS DUCTS, DECKS, OPEN GRATE FLOORING, CUTTING TABLES, AND OVERHEAD DOORS AS REQUIRED BY NFPA 13 SECTION 8.6.5.3.3.

3.08 THE INSTALLING CONTRACTOR SHALL IDENTIFY A HYDRAULICALLY DESIGNED SPRINKLER SYSTEM WITH A PERMANENTLY MARKED WEATHERPROOF METAL OR RIGID PLASTIC SIGN SECURED WITH CORROSION RESISTANT WIRE, CHAIN OR OTHER APPROVED MEANS. SUCH SIGNS SHALL BE PLACED AT THE ALARM VALVE, DRY PIPE VALVE, PREACTION VALVE OR DELUGE VALVE SUPPLYING THE CORRESPONDING HYDRAULICALLY DESIGNED AREA.

A. THE SIGN SHALL INCLUDE THE FOLLOWING INFORMATION:

1. LOCATION OF THE DESIGN AREAS

2. DISCHARGE DENSITIES OVER THE DESIGN AREA OR AREAS

3. REQUIRED FLOW AND RESIDUAL PRESSURE DEMAND AT THE BASE OF THE RISER

4. OCCUPANCY CLASSIFICATION OR COMMODITY CLASSIFICATION AND MAXIMUM PERMITTED STORAGE HEIGHT AND CONFIGURATION.

5. HOSE STREAM ALLOWANCE INCLUDED IN ADDITION TO THE SPRINKLER DEMAND.

6. THE NAME OF THE INSTALLING CONTRACTOR.

3.09 TESTING FOR AUTOMATIC SPRINKLER AND FIRE STANDPIPE

A. PROVIDE LABOR, MATERIALS, INSTRUMENTS, POWER, ETC., AS REQUIRED FOR TESTING. ALL NEW AND EXISTING PIPING SHOWN ON THE CONTRACT DOCUMENTS SHALL BE TESTED AS HEREIN SPECIFIED. TESTS SHALL BE PERFORMED IN THE PRESENCE OF THE OWNER'S REPRESENTATIVE AND SUCH OTHER PARTIES AS MAY HAVE LEGAL JURISDICTION.

B. NOTIFY THE OWNER'S REPRESENTATIVE AND ALL AUTHORITIES HAVING JURISDICTION AT LEAST 48 HOURS IN ADVANCE OF MAKING THE REQUIRED TESTS SO THAT ARRANGEMENTS MAY BE MADE FOR THEIR PRESENCE TO WITNESS THE TESTS.

C. PRESSURE TESTS SHALL BE APPLIED TO ALL COMPLETED OR PARTIALLY COMPLETED WORK. IN NO CASE SHALL PIPING, COMPONENTS, AND SPRINKLERS BE SUBJECT TO PRESSURES EXCEEDING THEIR RATING.

D. ALL DEFECTIVE WORK SHALL BE PROMPTLY REPAIRED OR REPLACED AND THE TESTS SHALL BE REPEATED UNTIL THE SYSTEM AND ALL COMPONENT PARTS RECEIVE THE APPROVAL OF THE OWNER'S REPRESENTATIVE.

E. ANY DAMAGES RESULTING FROM TESTING SHALL BE REPAIRED AND/OR DAMAGED MATERIALS REPLACED, ALL TO THE SATISFACTION OF THE OWNER.

F. SPRINKLER SYSTEM TESTING SHALL BE PERFORMED IN ACCORDANCE WITH APPLICABLE UNDERWRITERS' AND LOCAL BUILDING DEPARTMENT REQUIREMENTS, BUT IN NO CASE SHALL SPRINKLER PIPING BE TESTED AT LESS THAN 200 PSI FOR TWO CONSECUTIVE HOURS.

G. STANDPIPE TESTING SHALL BE PERFORMED IN ACCORDANCE WITH APPLICABLE UNDERWRITERS' AND LOCAL BUILDING DEPARTMENT REQUIREMENTS, BUT IN NO CASE SHALL STANDPIPE PIPING BE TESTED AT LESS THAN 300 PSI FOR ONE HOUR.

H. INSTALLATION OF POST INSTALLED ANCHORS IN CONCRETE AND IN MASONRY SHALL BE IN ACCORDANCE WITH ACI 318, AC01, AC58, AND/OR AC106 STANDARDS AND LOCAL BUILDING CODE. ALL ANCHORS IN MASONRY NOT HAVING AN ICC-ES LISTING SHALL BE PULL TESTED. THE MINIMUM NUMBER OF ANCHORS TESTED SHALL BE THE GREATER OF 20% OF THE TOTAL OR THREE.

TO THE BEST KNOWLEDGE, BELIEF AND PROFESSIONAL JUDGEMENT, THESE PLANS AND SPECIFICATIONS ARE IN COMPLIANCE WITH THE 2020 ENERGY CONSERVATION CONSTRUCTION CODE OF NEW YORK STATE.

ARCHITECT
di Domenico + Partners LLP
dD
Architecture
Landscape Architecture
Planning
3743 Crescent Street, 3rd Floor
Long Island City, New York 11101
Tel 212-337-0400
Fax 212-337-3567

CIVIL PLANNING ENGINEER
JMC
JMC Planning Engineering Landscape
Architecture & Land Surveying, PLLC
120 Bedford Road
Armonk, New York 10504
Tel 914-273-5225
Fax 914-273-2102

MEP ENGINEER
Burns
BURNS ENGINEERING, PC.
1261 Broadway, Suite 708
New York, New York 10001
Tel 212-962-3503

STRUCTURAL ENGINEER
GEI Consultants
GEI50
1385 Broadway, 20th FL
New York, New York 10018
Tel 212-687-8282

MANHATTAN BEER DISTRIBUTORS

MANHATTAN BEER DISTRIBUTORS
20 DUNNIGAN DRIVE
SUFFERN, NEW YORK

KEY PLAN

REV	DESCRIPTION	DATE
	ISSUED FOR DOB SUBMISSION	09/10/2021
	ISSUED FOR BID	10/15/2021

DRAWN BY :	M.ESPINAL
CHECKED BY :	J.CLARK
APPROVED BY :	J.MIZRAHI
DATE :	04/16/21
SCALE :	NOT TO SCALE

DRAWING TITLE :

FIRE PROTECTION
SPECIFICATIONS

DWG NUMBER :

F-901

DRY SPRINKLER SYSTEM SPECIFICATION

PART 1 GENERAL

1.01 GENERAL REQUIREMENTS

A. A SELF-CONTAINED, FULLY INTEGRATED LOW PRESSURE DRY PIPE SPRINKLER SYSTEM SHALL BE PROVIDED. THE SYSTEM MUST BE COMPRISED OF UL LISTED/FM APPROVED COMPONENTS WITHIN A CABINET SPECIFICALLY DESIGNED FOR THE INTENDED USE AS AN ASSEMBLED UNIT, CONTAINING ALL OF THE FACTORY INSTALLED HYDRAULIC AND ELECTRICAL COMPONENTS, FITTINGS, GAUGES, MECHANICAL COUPLINGS AND SUPERVISORY AIR SUPPLY NECESSARY FOR THE OPERATION OF AN APPROVED AUTOMATIC DRY SPRINKLER SYSTEM IN ACCORDANCE WITH NFPA 13.

B. CABINET SHALL CONTAIN A DOMESTICALLY FACTORY-ASSEMBLED AND TESTED DRY SYSTEM RISER ASSEMBLY WITH GALVANIZED ELECTRIC ACTUATION TRIM. THE CABINET SHALL BE 12-GAUGE STEEL WITH RUSTPROOF EXTERIOR POWDER-COATED BLACK FINISH, AND RUSTPROOF INTERIOR POWDER-COATED WHITE FINISH FOR IMPROVED INTERIOR CABINET VISIBILITY. CABINET ENCLOSURE SHALL HAVE REMOVABLE PANELS FOR ACCESS TO INTERIOR COMPONENTS. CABINET DOOR SHALL BE LINED WITH A NEOPRENE GASKET AND SHALL CONTAIN VIEWING PORTS FOR WATER SUPPLY PRESSURE, SUPERVISORY AIR PRESSURE, AND SYSTEM PRESSURE GAUGES THAT ARE SECURELY MOUNTED.

C. THE LOW PRESSURE DRY PIPE SYSTEM RISER ASSEMBLY SHALL INCLUDE A PROPERLY SIZED WATER CONTROL VALVE, WATER SUPPLY MANIFOLD AND DRAIN MANIFOLD WITH GROOVED END CONNECTIONS, SYSTEM DRAIN, GROOVED END SYSTEM CONTROL INDICATING BUTTERFLY VALVE WITH A PRE-WIRED SUPERVISORY TAMPER SWITCH ASSEMBLY, GROOVED-END SYSTEM DISCHARGE OUTLET, AND ASSOCIATED PNEUMATIC ACTUATION RELEASE TRIM LISTED AS PART OF THE DRY PIPE VALVE ASSEMBLY. DRY VALVE TRIM SHALL BE GALVANIZED AND SHALL CONSIST OF ALL COMPONENTS NECESSARY TO ENABLE THE SYSTEM TO BE USED AS A LOW PRESSURE SYSTEM. THESE COMPONENTS INCLUDE A LOW PRESSURE DRY PILOT ACTUATOR, MAIN DRAIN, ALARM LINE TEST, WATER PRESSURE GAUGES, PUSH ROD CHAMBER SUPPLY CONNECTIONS, MANUAL EMERGENCY RELEASE VALVE, PRESSURIZING LINE CONNECTION, AND 4" DIAMETER DRIP CUP ASSEMBLY. A CONDENSATE DRAIN VALVE SHALL ALSO BE INCLUDED TO PREVENT WATER COLUMNING ABOVE THE CLAPPER. LOW AIR SUPERVISORY AND WATER FLOW PRESSURE SWITCHES SHALL BE INCLUDED AS PART OF THIS ASSEMBLY.

D. SUPERVISORY AIR SUPPLY SHALL BE PROVIDED BY AN OIL-LESS, TANK-MOUNTED AIR COMPRESSOR WITH ASSOCIATED PRESSURE SWITCH AND CHECK VALVE LOCATED WITHIN THE CABINET. DRY PIPE SYSTEM SUPERVISORY AIR SHALL BE REGULATED THROUGH A REGULATING PRESSURE MAINTENANCE DEVICE SET IN ACCORDANCE WITH THE MANUFACTURERS DATA SHEET.

E. A 120/220 VAC WATERTIGHT TERMINAL BOX MOUNTED INSIDE THE CABINET SHALL BE PROVIDED FOR POWER CONNECTION TO THE AIR COMPRESSOR. WIRING OF CONTROL VALVE SUPERVISORY SWITCH, LOW PRESSURE ALARM SWITCH, WATERFLOW ALARM PRESSURE SWITCH, AND OPTIONAL LOW NITROGEN PRESSURE SWITCH SHALL BE TRANSLATED TO A WATERTIGHT TERMINAL BOX MOUNTED INSIDE THE CABINET. ALL FIELD WIRING SHALL BE CONNECTED TO THESE BOXES.

F. ASSEMBLED UNIT DRY PIPE SYSTEM TO BE RELIABLE MODEL DDX-LP DRYPAK. [NOTE THAT THIS SYSTEM IS AVAILABLE IN SIZES 2 ½", 3", 4", 6", AND 8"].

PART 2 MATERIALS

2.01 SYSTEM CONTROL VALVE

A. A [2"] [2-1/2"] [3"] [4"] [6"] [8"] SLOW CLOSE, UL LISTED/FM APPROVED INDICATING WAFER-STYLE BUTTERFLY VALVE WITH GROOVED END CONNECTIONS AND INTEGRAL SUPERVISORY TAMPER SWITCH ASSEMBLY SHALL BE PROVIDED. BUTTERFLY VALVE SHALL HAVE A WORKING PRESSURE RATING OF 250 PSI. VALVE BODY SHALL BE CAST DUCTILE IRON CONSTRUCTION IN ACCORDANCE WITH ASTM A 536 AND STEM TO BE 416 STAINLESS STEEL. BOTH THE STEM SEAL AND THE DISC SEAL TO BE CONSTRUCTED OF NITRILE (BUNA-N) RUBBER. THE VALVE SHALL HAVE A WEATHERPROOF GEAR OPERATOR RATED FOR INDOOR/OUTDOOR USE WITH HAND WHEEL AND RAISED POSITION INDICATOR.

B. TWO INTERNAL, FACTORY-MOUNTED SUPERVISORY SWITCHES SHALL BE HOUSED WITHIN THE SWITCH BOX HOUSING; A S.P.S.T. SWITCH HAVING A RATING OF 15A @ 125 VAC, 1/2A @ 125 VDC, AND A S.P. D. T. SWITCH HAVING A RATING OF 11A @ 125 VAC, 1 A @ 28 VDC. ALL LEAD WIRES FOR EXTERNAL CONNECTIONS ARE TO BE 18 AWG, EXITING THE SWITCH BOX HOUSING THROUGH A SINGLE HOLE SUITABLE FOR ½" CONDUIT FITTINGS. WATER SUPPLY CONTROL VALVE SHALL BE A [2"] [2-1/2"] [3"] [4"] [6"] [8"] NIBCO MODEL WD3510-8 BUTTERFLY VALVE.

2.02 DELUGE VALVE

A. THE ASSEMBLED UNIT DRY PIPE SYSTEM SHALL UTILIZE A [2"] [2-1/2"] [3"] [4"] [6"] [8"] RELIABLE MODEL DDX DELUGE VALVE. 2", 2½", 3" , AND 8" DELUGE VALVES SHALL HAVE A RATED WORKING PRESSURE OF 250 PSI AND SHALL BE FACTORY HYDROSTATIC TESTED AT 500 PSI. 4" AND 6" DELUGE VALVES SHALL HAVE A RATED WORKING PRESSURE OF 300 PSI AND SHALL BE FACTORY HYDROSTATIC TESTED AT 600 PSI.

B. DELUGE VALVE SHALL BE A [2"] [2-1/2"] [3"] [4"] [6"] [8"] UL LISTED/FM APPROVED HYDRAULICALLY OPERATED, DIFFERENTIAL LATCHING CLAPPER-TYPE VALVE. DELUGE VALVE CONSTRUCTION SHALL BE OF LIGHTWEIGHT, DUCTILE-IRON CONSTRUCTION WITH "SCREW IN" STAINLESS STEEL SEAT AND CLAPPER ASSEMBLY. SEAT SHALL HAVE O-RING SEALS TO RESIST CORROSION AND LEAKAGE. CLAPPER FACING SHALL BE PRESSURE ACTUATED, PROVIDING A LIMITED COMPRESSION SEAT FOR THE SEALING FORCE BETWEEN THE CLAPPER RUBBER FACING AND THE VALVE SEAT. DELUGE VALVE SHALL HAVE AN EXTERNAL RESET KNOB FOR RESETTING THE CLAPPER WITHOUT HAVING TO REMOVE THE VALVE FACE PLATE. PUSH-ROD CHAMBER DESIGN SHALL CONSIST OF A STAINLESS STEEL PISTON/ PUSH-ROD AND SPRING ASSEMBLY WITH DIAPHRAGM SEAL SECURED TO THE CASTING THROUGH A PUSH-ROD GUIDE CONSTRUCTED OF A SYNTHETIC ENGINEERING PLASTIC TO RESIST CORROSION. CASTING SHALL HAVE A BLEEDER HOLE LOCATED ON THE PUSHROD CHAMBER FOR AIR/WATER LEAKAGE INDICATION. TRIP RATIO SHALL BE APPROXIMATELY A 3:1 FORCE DIFFERENTIAL. DELUGE VALVE SHALL BE OF THE STRAIGHT-THROUGH DESIGN TO MINIMIZE FRICTION LOSS AND SHALL BE ACTIVATED BY PNEUMATIC ACTUATION TRIM. INLET RESTRICTION ORIFICE SHALL BE FACTORY INSTALLED INTO INLET PORT OF DELUGE VALVE PUSH-ROD COVER PLATE AND NOT BE A SEPARATE PART OF THE DELUGE VALVE TRIM. END CONNECTION STYLE TO BE GROOVED INLET AND GROOVED OUTLET, PER ANSI/AWWA C606.

C. VALVE TRIM SHALL CONSIST OF GALVANIZED AND BRASS COMPONENTS SPECIFICALLY LISTED/APPROVED WITH THE DELUGE VALVE. TRIM COMPONENTS SHALL INCLUDE [1-1/4-INCH] [2-INCH] MAIN DRAIN, ALARM LINE TEST, WATER PRESSURE GAUGES, PUSH ROD CHAMBER SUPPLY CONNECTIONS, MANUAL EMERGENCY RELEASE VALVE, AND 4" DIAMETER DRIP CUP ASSEMBLY. CONDENSATE DRAIN VALVE SHALL ALSO BE INCLUDED TO PREVENT WATER COLUMNING ABOVE THE CLAPPER. DELUGE VALVE RELEASING DEVICE SHALL BE A LOW PNEUMATIC PRESSURE DRY PILOT ACTUATOR.

2.03 DRY PILOT ACTUATOR

A. THE LOW PRESSURE PNEUMATIC ACTUATOR SHALL BE OF CAST IRON CONSTRUCTION UTILIZING A DIAPHRAGM AND COMPRESSION SPRING DESIGN TO SEPARATE THE PUSH-ROD CHAMBER WATER PRESSURE FROM THE SYSTEM PIPING PNEUMATIC SUPERVISORY PRESSURE. THE LOW PRESSURE ACTUATOR SHALL ONLY REQUIRE BETWEEN 8 AND 28 PSI SUPERVISORY PRESSURE FOR PROPER SETTING IN ACCORDANCE WITH THE MANUFACTURER'S INSTRUCTIONS. LOW PRESSURE ACTUATOR SHALL BE RELIABLE MODEL LP ACTUATOR.

2.04 SUPERVISORY AIR SUPPLY

A. A TANK-MOUNTED AIR COMPRESSOR WITH ASSOCIATED PRESSURE SWITCH AND CHECK VALVE SHALL BE CONTAINED WITHIN THE CABINET. COMPRESSOR SHALL BE SELECTED FROM THOSE AVAILABLE FROM MANUFACTURER AND LISTED WITH UNIT BASED UPON SYSTEM SIZE. MOTOR SIZE, VOLTAGE, AND OTHER ELECTRICAL CHARACTERISTICS SHALL BE COORDINATED WITH ELECTRICAL SUBCONTRACTOR. AIR SUPPLY SHALL BE REGULATED BY AN APPROVED REGULATING TYPE AIR MAINTENANCE DEVICE CONTAINING A FIELD ADJUSTABLE REGULATOR HAVING A RANGE OF 5 TO 100 PSI, A CHECK VALVE, STRAINER, AND A RAPID FILL VALVE. DRY SYSTEM SUPERVISORY AIR PRESSURE SHALL BE SET IN ACCORDANCE WITH THE MANUFACTURERS DATA SHEET.

2.05 SPRINKLERS

A. REFER TO SPRINKLER SECTION OF SPECIFICATIONS

2.06 ACCELERATOR

A. FOR SYSTEM CAPACITIES IN ACCORDANCE WITH NFPA 13, AN ACCELERATOR WITH ASSOCIATED GALVANIZED TRIM KIT SHALL BE PROVIDED TO EXHAUST AIR PRESSURE FROM THE PNEUMATIC ACTUATOR TRIM PIPING IN ORDER TO HASTEN OPERATION OF THE DRY PIPE SYSTEM. MINIMUM PNEUMATIC PRESSURE SHALL BE 15 PSI TO ENSURE PROPER ACCELERATOR OPERATION. ACCELERATOR SHALL BE UL LISTED/FM APPROVED FOR USE WITH THE LOW PRESSURE DRY PIPE VALVE TRIM. ACCELERATOR SHALL BE CAPABLE OF ADJUSTING FOR SMALL FLUCTUATIONS IN SYSTEM AIR PRESSURE WITHOUT CAUSING OPERATION. THE ACCELERATOR SHALL CONTAIN AN INTEGRAL ACCELO-CHECK (ANTI-FLOODING) ASSEMBLY TO PREVENT ENTRY OF WATER AND DEBRIS INTO CRITICAL INTERNAL AREAS DURING OPERATION. ACCELERATOR BODY AND DOME TO BE OF CAST ALUMINUM AND EPOXY COATED INSIDE AND OUT. DIAPHRAGM CONSTRUCTION SHALL CONSIST OF DUPONT FAIRPRENE BN 5049 WITH STAINLESS STEEL FILTER ASSEMBLY. TRIM KIT SHALL CONSIST OF ALL GALVANIZED AND BRASS PARTS, INCLUDING AN ISOLATING BALL VALVE. ACCELERATOR AND TRIM KIT SHALL BE RELIABLE MODEL B-1 ACCELERATOR TRIM KIT.

2.07 LOW AIR SUPERVISORY PRESSURE SWITCH

A. SUPERVISORY AIR PRESSURE WITHIN THE DRY SYSTEM PIPING SHALL BE MONITORED THROUGH THE USE OF A LOW AIR SUPERVISORY PRESSURE SWITCH. IT SHALL BE UL LISTED/FM APPROVED. THE SWITCH SHALL BE A FIELD-ADJUSTABLE, BELLOWS-ACTIVATED TYPE PRESSURE SWITCH COMPATIBLE WITH SYSTEM DEVICES. THE PRESSURE SWITCH SHALL HAVE THE CAPABILITY TO PROVIDE ALARM RESPONSE BETWEEN 10 AND 100 PSI, AND SHALL BE FIELD ADJUSTED TO CORRELATE WITH NORMAL SYSTEM OPERATING PRESSURE. THE PRESSURE SWITCH SHALL HAVE TWO FIELD-REPLACEABLE SPDT CONTACTS RATED AT 10.0 AMP @ 125/250 VAC AND 2.5 AMP @ 6/12/24 VDC. SWITCH SHALL BE PROVIDED WITH A ½" NPT MALE GLASS-REINFORCED NYLON PRESSURE CONNECTION, AND SHALL HAVE A MAXIMUM PRESSURE RATING OF 250 PSI. TWO CONDUIT CONNECTION HOLES SHALL BE PROVIDED IN THE MOUNTING PLATE TO ACCEPT STANDARD ½" CONDUIT FITTINGS. THE SWITCH ENCLOSURE SHALL BE WEATHERPROOF AND CARRY A UL 4X/NEMA 4 RATING WHEN USED WITH PROPER ELECTRICAL FITTINGS AND CONDUIT. THE COVER SHALL HAVE THE WIRING DIAGRAM CAST INTO IT AND INCORPORATE TAMPER-RESISTANT SCREWS. LOW AIR SUPERVISORY PRESSURE SWITCH SHALL BE A SYSTEM SENSOR EPS 40-2 PRESSURE SWITCH.

2.08 WATER FLOW PRESSURE SWITCH

A. AN ALARM PRESSURE SWITCH INSTALLED ON THE ALARM LINE TRIM OF THE DELUGE VALVE SHALL PROVIDE A WATER FLOW ALARM. IT SHALL BE [CULUS LISTED] [FM APPROVED] [NYC MEA APPROVED]. THE SWITCH SHALL BE A FIELD-ADJUSTABLE, BELLOWS-ACTIVATED TYPE PRESSURE SWITCH COMPATIBLE WITH SYSTEM DEVICES. THE PRESSURE SWITCH SHALL HAVE THE CAPABILITY TO PROVIDE ALARM RESPONSE BETWEEN 4 AND 20 PSI, BUT SHALL BE FACTORY ADJUSTED TO RESPOND AT 4 TO 8 PSI ON RISING PRESSURE. THE PRESSURE SWITCH SHALL HAVE A FIELD-REPLACEABLE SPDT CONTACT(S) RATED AT 10.0 AMP @ 125/250 VAC AND 2.5 AMP @ 6/12/24 VDC. SWITCH SHALL BE PROVIDED WITH A ½" NPT MALE GLASS-REINFORCED NYLON PRESSURE CONNECTION, AND SHALL HAVE A MAXIMUM PRESSURE RATING OF 250 PSI. TWO CONDUIT CONNECTION HOLES SHALL BE PROVIDED IN THE MOUNTING PLATE TO ACCEPT STANDARD ½" CONDUIT FITTINGS. THE SWITCH ENCLOSURE SHALL BE WEATHERPROOF AND CARRY A UL 4X/NEMA 4 RATING WHEN USED WITH PROPER ELECTRICAL FITTINGS AND CONDUIT. THE COVER SHALL HAVE THE WIRING DIAGRAM CAST INTO IT AND INCORPORATE TAMPER-RESISTANT SCREWS. ALARM PRESSURE SWITCH SHALL BE A SYSTEM SENSOR EPS 10-1 PRESSURE SWITCH.

2.09 PIPING

A. SYSTEM PIPING AND FITTINGS SHALL BE AS RECOMMENDED BY NFPA 13. REFER TO PIPING SECTION OF SPECIFICATIONS.

2.10 SYSTEM DRAIN

A. THE SINGLE DRAIN COLLECTOR OF THE DRY SYSTEM SHALL BE CONNECTED TO AN OPEN DRAIN CONSISTING OF A VERTICAL PIPE WITH AN AIR GAP AROUND THE DRAIN COLLECTOR PIPE.

B. THE DRAIN PIPING SHALL NOT BE RESTRICTED OR REDUCED AND SHALL BE OF THE SAME DIAMETER AS THE DRAIN COLLECTOR.

C. MULTIPLE DRAIN COLLECTORS AND OPEN DRAIN CUPS INSIDE THE CABINET WILL NOT BE ACCEPTED.

PART 3 EXECUTION

3.01 INSTALLATION

A. THE INSTALLATION MUST MEET ALL ESTABLISHED STANDARDS AND BE ACCORDING TO ALL APPLICABLE LAWS, REGULATIONS AND CODES.

B. THE PROPER OPERATION AND COORDINATION FOR THE SYSTEM'S INSTALLATION, INCLUDING THE AUTOMATIC SPRINKLER SYSTEM, AND INITIAL START-UP ARE ALL UNDER THE RESPONSIBILITY OF THE FIRE PROTECTION CONTRACTOR.

C. WATER SUPPLY FOR THE CABINET SHALL ALLOW A GROOVED CONNECTION TO SUPPLY MANIFOLD FROM THE LEFT OR RIGHT-HAND SIDE OF THE UNIT.

D. DRAIN OUTPUT FOR THE CABINET SHALL BE CONNECTED THROUGH THE BOTTOM CENTER OF THE UNIT.

3.02 TRAINING

A. THE CONTRACTOR MUST PLAN AND ORGANIZE A TRAINING SESSION OF AT LEAST TWO HOURS FOR THE BUILDING MAINTENANCE STAFF, IN THE PRESENCE OF BUILDING OWNER OR HIS REPRESENTATIVE.

B. THE TRAINING SESSION MUST INCLUDE NORMAL OPERATION, EMERGENCY PROCEDURES AND SYSTEM MAINTENANCE.

3.03 TESTS AND VERIFICATIONS

A. HYDROSTATIC TESTS MUST BE PERFORMED ON THE ENTIRE SPRINKLER PIPING SYSTEM, AS REQUIRED BY NFPA 13.

B. A DRAIN TEST USING THE AUXILIARY DRAIN VALVE FULLY OPEN (DRAIN LOCATED ON WATER SUPPLY SIDE, DRY VALVE INLET) MUST BE PERFORMED TO MAKE SURE THAT NO BACK PRESSURE IN DRAIN PIPING EXISTS, WHICH COULD AFFECT THE PROPER OPERATION OF THE DRY SYSTEM.

C. AN AIR SUPPLY TEST MUST BE PERFORMED, TO CONFIRM THAT NORMAL AIR PRESSURE CAN BE RESTORED WITHIN 30 MINUTES.

3.04 REPORT & CERTIFICATE

A. AN INSPECTION REPORT AND A CERTIFICATE MUST BE SUPPLIED TO THE ENGINEER AT THE COMPLETION OF THE PROJECT. ALL TEST RESULTS SHALL BE REGISTERED IN A BOOKLET TO BE INCLUDED WITH THE INSPECTION REPORT.

TO THE BEST KNOWLEDGE, BELIEF AND PROFESSIONAL JUDGEMENT, THESE PLANS AND SPECIFICATIONS ARE IN COMPLIANCE WITH THE 2020 ENERGY CONSERVATION CONSTRUCTION CODE OF NEW YORK STATE.

ARCHITECT

di Domenico + Partners LLP

Architecture
Landscape Architecture
Planning

3743 Crescent Street, 3rd Floor
Long Island City, New York 11101
Tel 212-337-0400
Fax 212-337-3567

CIVIL PLANNING ENGINEER

JMC Planning Engineering Landscape Architecture & Land Surveying, PLLC
120 Bedford Road
Armonk, New York 10504
Tel 914-273-5225
Fax 914-273-2102

MEP ENGINEER

BURNS ENGINEERING, PC.
1261 Broadway, Suite 708
New York, New York 10001
Tel 212-962-3503

STRUCTURAL ENGINEER

GEI50
1385 Broadway, 20th FL
New York, New York 10018
Tel 212-687-8282

MANHATTAN BEER DISTRIBUTORS

MANHATTAN BEER DISTRIBUTORS
20 DUNNIGAN DRIVE
SUFFERN, NEW YORK

KEY PLAN

REV	DESCRIPTION	DATE
	ISSUED FOR DOB SUBMISSION	09/10/2021
	ISSUED FOR BID	10/15/2021

DRAWN BY :	M.ESPINAL
CHECKED BY :	J.CLARK
APPROVED BY :	J.MIZRAHI
DATE :	04/16/21
SCALE :	NOT TO SCALE

DRAWING TITLE :

FIRE PROTECTION SPECIFICATIONS

DWG NUMBER :

F-902