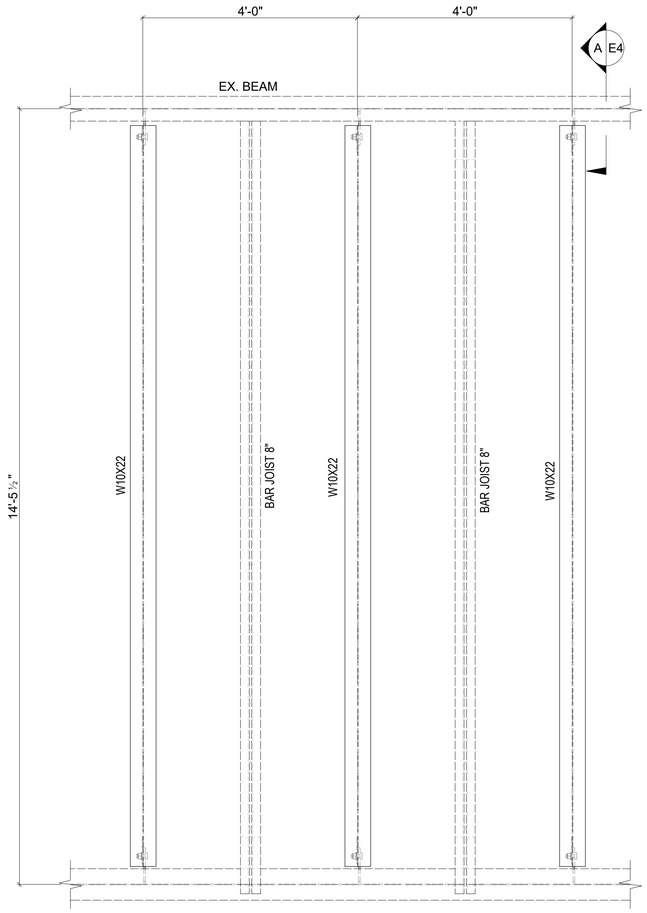

AREA 5 - PARTIAL PLAN VIEW
SCALE: 3/4"=1'-0"

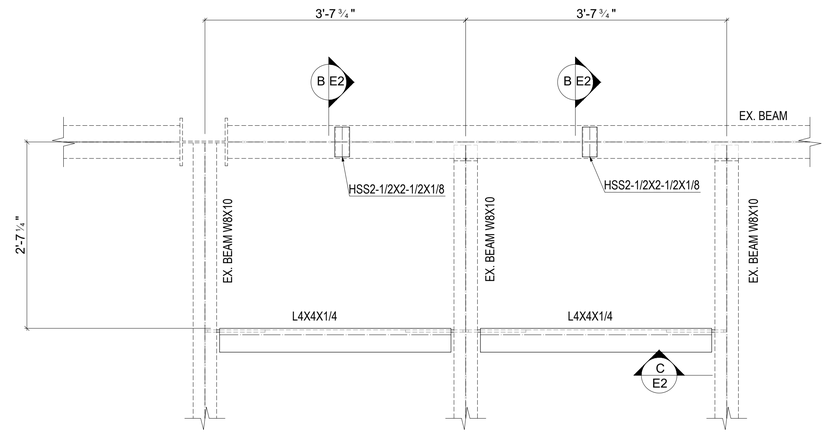

AREA 6 - PARTIAL PLAN VIEW
SCALE: 1"=1'-0"

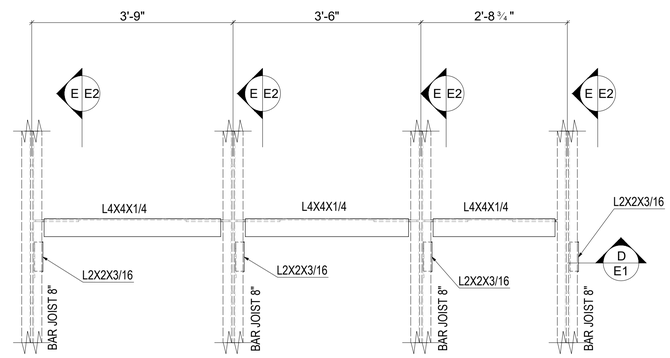

AREA 7 - PARTIAL PLAN VIEW
SCALE: 3/4"=1'-0"

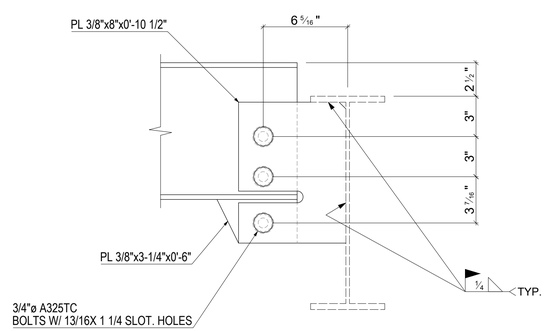

TYP. Section A - A

BILLING ITEM:

LOCATION: 50 Blauvelt Rd#1 Nanuet, NY 10954

CONTRACT REF. DRWG: HS-S101 & HS-S501

UNITED IRON DETAILS:

SPECIFICATIONS:

MATERIAL TYPE: ASTM-992 u/n; A500 GR.-B u/n; A36

WELDING ELECTRODE: E70XXELECT

FINISH: -

HOLES: 13/16"ø u/n

SHOP HARDWARE:

FIELD HARDWARE:

TYPE	QTY.	SIZE	LENGTH	DESCRIPTION

REV.	DATE	DESCRIPTION	DATE	PRINTS	ISSUE FOR
B	11/29/23	FOR APPROVAL			ASa
A	11/03/23	FOR APPROVAL			ASa

FABRICATION	FIELD	UNITED IRON ACTION CODE
		FE ☐ FD ☐ PU ☐

APPROVED AS NOTED	DRWG. DATE	10/02/23
	DRAWN BY	ASa
APPROVED	CHECKED BY	RD

914-667-5700
212-365-5275
FAX-914-667-5925
UNITED IRON, INC.
6 ROSLYN PLACE
MOUNT VERNON, N.Y. 10550-4587

JOB Barr Middle School
Roof reinforcements

ARCH. KSQ DESIGN - 215W 40th Street NY

G.C.

TITLE **ROOF REINFORCEMENTS**

JOB NO.	BILL NO.	EXTRA NO.	DRWG NO.
2346	B 01	X	E7