No: MC-01

SUBMITTAL COVERSHEET
Nanuet UFSD –Phase 3 Projects

Architect:
KSQ Architects
215 W 40th Street,15th Floor
New York, NY 10018

Owner:
Nanuet Union Free School District
101 Church Street
Nanuet, NY 10954

Construction Manager:
Jacobs
One Penn Plaza, 54th floor
New York, NY 10019

Contractor: Joe Lombardo Plumbing & Heating of Rockland Inc

Contract: Ron Lombardo

Address: 321 Spook Rock Road Suite 109A
Suffern, New York 10901

Telephone: 845-357-6537

Fax: 845-357-8529

School Name: Nanuet Union Free School District Phase 3 Bond Projects @ Barr Middle School & Nanuet High School

Type of Submittal:

Re-submittal: [ ] No [ ] Yes

[ ] Shop Drawings [ ] Product Data [ ] Schedule [ ] Sample [ ] _____
[ ] Test Report [ ] Certificate [ ] Color Sample [ ] Warranty [ ] _____

Submittal Description: REFRIERGATION PIPING

Product Name: _____

Manufacturer: _____

Subcontractor/ Supplier: ABCO SUPPLY CO

References:

Spec. Section No.: 232300

Drawing No(s): _____

Paragraph: _____

Rm. or Detail No(s): _____

Architect's/ Engineer's Review Stamp	Contractor Review Statement: These documents have been checked for accuracy and coordinated with job conditions and Contract requirements by this office and have been found to comply with the provisions of the Contract Documents. Ronald J. Lombardo 9-25-23 Name: Date: Company Name: Joe Lombardo Plumbing & Heating of Rockland Inc.

Remarks:

2.1 - A - COPPER PIPE

Date_____

Product Certification

Mueller Copper Tube products are all manufactured in the USA. All tubing produced in Fulton, MS, and Wynne, AR, is seamless and of UNS C12200 grade of copper and is manufactured to meet the chemical and mechanical properties of the applicable ASTM specifications set forth below. When specified at order placement, Mueller Copper Tube can supply Certified Tube to meet all requirements of the current applicable ASTM specification, at an additional cost.

CONDENSATE >>>>>> Streamline Copper Water Tube (Types K,L,M)
ASTM B88 and ANSI/NSF 61

LINE SETS 1/4 - 5/8 ACR TUBE Streamline Copper Refrigeration Service Coils
ASTM B280

LINES 3/4 THRU 1" HARD LENGTHS
Streamline Nitrogenized ACR Hard Drawn
Copper Tube - ASTM B280

Streamline Copper Drainage Tube (DWV)
ASTM B306

* Please contact Technical Services for certification in Oxygen and Medical service tube. (1.662.862.1700)
Oxygen & Medical Service Tube - To ASTM B819 (Types K & L) Hard Drawn Straight Lengths Only in Accordance To CGA Cleanness Specification; CGA G4.1 (Compressed Gas Association); & NFPA 99 (Health Care Facilities).

NSF 61 Restriction Statement: "Copper Tube (Alloy C12200) is certified by NSF to ANSI/NSF Standard 61 for public water supplies meeting or in the process of meeting the U.S. EPA Lead and Copper Rule (56FR 26460, June 7, 1991). Water supplies with pH less than 6.5 may require corrosion control to limit copper solubility in drinking water."

P. O. BOX 849 ◆ FULTON, MS 38843 ◆ (662) 862-1700 ◆ FAX (662) 862-3002

P. O. BOX 309 ◆ WYNNE, AR 72396 ◆ (870) 238-3201 ◆ FAX (870) 238-8724

Streamline®
Tube • Fittings • Valves

COPPER FITTINGS FOR HVACR APPLICATIONS

Job Name _____ **Contractor** _____

Job Location _____ **Wholesaler** _____

Engineer _____ **Streamline® Rep** _____

Product Description:

Streamline® Wrot Copper fittings for use in refrigeration applications. Available sizes ranging from ¼" to 8-1/8" in outside diameter. Product is designed to join ASTM B280 and ASTM B88 seamless copper tube.

Material:

Streamline® Wrot Copper fittings shall be made from material in compliance with UNS C12200 grade of copper.

Key Specifications:

Streamline® Wrot Copper, solder-joint, pressure fittings shall conform to ASME B16.22 and MSS SP104. Streamline® Wrot Copper, solder-joint, pressure fittings are third party verified in select sizes[1] through Underwriters Laboratories (UL) for operating pressure of 700psi at 250°F.

Installation:

Installations shall comply with the latest applicable building codes for the local jurisdiction. For detailed installation instructions, consult the Copper Developement Association at copper.org.

References:

Product Line	Product Type	Diameter
1 Copper Fittings c UL us 700 PSI R410A	Streamline® Wrot Solder-Joint Pressure	1/8" – 2-5/8"

*700PSI at 250°F in seclect patterns

C12200	99.9% Pure Copper
ASME B16.22	Wrot Copper and Copper Alloy Solder Joint Pressure Fittings
MSS SP104	Wrot Copper Solder and Joint Pressure Fittings

Other Applicable Standards

ASTM B88	Seamless Copper Water and Gas Tube (Types K, L, M)
ASTM B280	Seamless Copper Tube for Air Conditioning and Refrigeration

COPPER FITTINGS – HVACR

SOLDER JOINT PRESSURE WROT & CAST

NOTE: ALL SIZES ARE OD

ADAPTER

FEMALE WC-402 — **C x F**

Part	Size	Box	Ctn	Wt
W 01204	1/4 x 1/2	100	300	0.1
W 01205	x 3/8	100	700	0.05
W 01206	x 1/4	100	900	0.04
W 01207	x 1/8	100	1,500	0.04
W 01214	3/8 x 3/8	50	750	0.06
W 01215	x 1/4	50	750	0.04
W 01216	x 1/8	100	1,500	0.03
W 01223	1/2 x 3/4	50	300	0.16
W 01224	x 1/2	50	500	0.1
W 01225	x 3/8	50	750	0.07
W 01226	x 1/4	50	750	0.06
W 01230	5/8 x 3/4	25	250	0.16
W 01231	x 1/2	50	500	0.1
W 01232	x 3/8	50	500	0.07
W 01233	x 1/4	50	500	0.06
W 01238	3/4 x 3/4	50	500	0.15
W 01239	x 1/2	50	500	0.09
W 01245	7/8 x 1	25	250	0.27
W 01246	x 3/4	25	250	0.14
W 01247	x 1/2	25	250	0.11
W 01261	1-1/8 x 1-1/4	10	100	0.28
W 01263	x 1	25	250	0.25
W 01264	x 3/4	25	250	0.22
W 01265	x 1/2	20	200	0.25
W 01270	1-3/8 x 1-1/2	10	100	0.5
W 01271	x 1-1/4	10	100	0.45
W 01272	x 1	10	100	0.33
W 01278	1-5/8 x 2	–	60	0.74
W 01279	x 1-1/2	10	100	0.53
W 01280	x 1-1/4	5	50	0.39
W 01287	2-1/8 x 2	–	50	0.57
W 01288	x 1-1/2	5	50	0.74
W 01296	2-5/8 x 2-1/2	–	25	1.22
W 01297	3-1/8 x 3	–	15	

ADAPTER

FITTING WC-405 — **FTG x F**

Part	Size	Box	Ctn	Wt
W 01514	3/8 x 3/8	50	750	0.06
W 01524	1/2 x 1/2	50	350	0.1
W 01525	x 3/8	50	750	0.05
W 01526	x 1/4	50	750	0.06
W 01531	5/8 x 1/2	50	450	0.11
W 01532	x 3/8	50	750	0.07
W 01546	7/8 x 3/4	25	250	0.17
W 01547	x 1/2	50	500	0.11
W 01563	1-1/8 x 1	25	250	0.24
W 01564	x 3/4	25	250	0.18
W 01571	1-3/8 x 1-1/4	10	100	0.4
W 01579	1-5/8 x 1-1/2	10	100	0.46
W 01587	2-1/8 x 2	–	50	0.65
W 01596	2-5/8 x 2-1/2	–	25	1.2

ADAPTER

MALE WC-401 — **C x M**

Part	Size	Box	Ctn	Wt
W 01105 †	1/4 x 3/8	50	750	0.06
W 01106 †	x 1/4	50	1,200	0.03
W 01107 †	x 1/8	50	2,400	0.02
W 01109 †	5/16 x 3/8	50	800	0.07
W 01110 †	x 1/4	50	1,200	0.03
W 01113 †	3/8 x 1/2	50	500	0.08
W 01114 †	x 3/8	50	750	0.06
W 01115 †	x 1/4	50	1,200	0.03
W 01116 †	x 1/8	50	2,000	0.02
W 01123 †	1/2 x 3/4	25	250	0.17
W 01124 †	x 1/2	50	500	0.09
W 01125 †	x 3/8	50	500	0.06

ADAPTER CONT.

W 01126 †	x 1/4	50	750	0.05
W 01129 †	5/8 x 1	15	150	0.3
W 01130 †	x 3/4	25	250	0.17
W 01131 †	x 1/2	50	500	0.06
W 01132 †	x 3/8	50	500	0.07
W 01133 †	x 1/4	25	600	0.06
W 01138 †	3/4 x 3/4	25	250	0.14
W 01139 †	x 1/2	25	250	0.12
W 01145 †	7/8 x 1	10	100	0.29
W 01146 †	x 3/4	25	250	0.13
W 01147 †	x 1/2	25	250	0.12
W 01161 †	1-1/8 x 1-1/2	10	100	0.48
W 01162 †	x 11/4	10	100	0.39
W 01163 †	x 1	10	100	0.24
W 01164 †	x 3/4	10	100	0.17
W 01165 †	x 1/2	10	100	0.18
W 01170 †	1-3/8 x 1-1/2	10	100	0.48
W 01171 †	x 1-1/4	10	100	0.41
W 01172 †	x 1	10	100	0.24
W 01173 †	x 3/4	10	100	0.21
W 01178 †	1-5/8 x 2	–	50	0.78
W 01179 †	x 1-1/2	10	100	0.51
W 01180 †	x 1-1/4	10	100	0.37
W 01181 †	x 1	10	100	0.38
W 01187 †	2-1/8 x 2	5	50	0.57
W 01188 †	x 1-1/2	–	50	0.64
W 01189 †	x 1-1/4	–	50	0.57
W 01196 †	2-5/8 x 2-1/2	–	20	1.26
W 01197 †	x 2	–	20	0.98
W 01198 †	x 1-1/2	–	22	0.98
W 01199	3-1/8 x 3	–	20	1.7
W 01150	4-1/8 x 4	–	16	3.71

ADAPTER

FITTING WC-404 — **FTG x M**

Part	Size	Box	Ctn	Wt
W 01425 †	1/2 x 3/8	50	750	0.05
W 01431 †	5/8 x 1/2	50	500	0.09
W 01432 †	x 3/8	50	750	0.06
W 01446 †	7/8 x 3/4	50	500	0.15
W 01447 †	x 1/2	50	500	0.13
W 01463 †	1-1/8 x 1	25	250	0.23
W 01464 †	x 3/4	25	250	0.19
W 01471 †	1-3/8 x 1-1/4	10	100	0.41
W 01479 †	1-5/8 x 1-1/2	10	100	0.49
W 01487 †	21/8 x 2	–	50	0.76
W 01496 †	2-5/8 x 2-1/2	–	20	1.95

BUSHING

FLUSH WC-106 — **FTG x C**

Part	Size	Box	Ctn	Wt
W 01706 †	3/8 x 1/4	100	4,000	0.01
W 01712 †	1/2 x 3/8	100	4,000	0.01
W 01714 †	x 1/4	100	2,400	0.02
W 01715 †	5/8 x 1/2	100	1,500	0.02
W 01717 †	x 3/8	100	1,500	0.04
W 01720 †	3/4 x 5/8	50	750	0.03
W 01721 †	x 1/2	50	750	0.06
W 01722 †	x 3/8	50	750	0.08
W 01725 †	7/8x 3/4	50	500	0.04
W 01726 †	x 5/8	50	500	0.07
W 01727 †	x 1/2	50	500	0.11
W 01737 †	1-1/8 x 7/8	50	500	0.12
W 01738 †	x 3/4	50	500	0.18
W 01739 †	x 5/8	25	250	0.22
W 01743 †	1-3/8 x 1-1/8	10	200	0.16
W 01745 †	x 7/8	10	200	0.3
W 01750 †	1-5/8 x 1-3/8	10	100	0.22
W 01751 †	x 1-1/8	10	100	0.41
W 01758 †	2-1/8 x 1-5/8	10	100	0.68
W 01759 †	x 1-3/8	5	50	0.94
W 01767 †	2-5/8 x 2-1/8	–	50	0.92

BUSHING

FLUSH WC-417 (BRASS) — **FTG x F**

Part	Size	Box	Ctn	Wt
A 07812	5/8 x 1/8	100	1,600	0.04
A 07813	x 1/4	50	1,200	0.02
A 07814	7/8 x 3/8	50	450	0.08
A 07815	1-1/8 x 1/2	50	300	0.17
A 07816	1-3/8 x 3/4	10	160	0.25
A 07817	1-5/8 x 1	10	90	0.34
A 07819	2-1/8 x 1-1/2	10	90	0.48

CAP

FLUSH WC-415 — **C**

Part	Size	Box	Ctn	Wt
W 07002	1/4	50	2,000	0
W 07004	3/8	50	2,000	0.01
W 07006	1/2	50	1,000	0.01
W 07007	5/8	100	1,000	0.02
W 07008	3/4	50	2,000	0.03
W 07009	7/8	50	500	0.04
W 07011	1-1/8	50	500	0.08
W 07012	1-3/8	25	250	0.11
W 07013	1-5/8	25	250	0.18
W 07014	2-1/8	–	100	0.3
W 07015	2-5/8	–	50	0.48
W 07016	3-1/8	–	50	0.73
W 07017	3-5/8	–	25	1.15
W 07018	4-1/8	–	20	1.5

COUPLING

NO STOP WC-400NS — **C x C**

Part	Size	Box	Ctn	Wt
W 01900 †	1/4	100	4,000	0
W 01901 †	3/8	50	2,000	0.01
W 01902 †	1/2	50	1,700	0.01
W 01903 †	5/8	100	1,000	0.03
W 01904 †	3/4	25	375	0.04
W 01905 †	7/8	50	500	0.06
W 01906 †	1-1/8	25	250	0.11
W 01907 †	1-3/8	25	250	0.15
W 01908 †	1-5/8	10	100	0.25
W 01909 †	2-1/8	–	75	0.4
W 01910 †	2-5/8	–	50	0.66
W 01911	3-1/8	–	25	1.03
W 01913	4-1/8	–	15	2.15

COUPLING

ROLLED STOP WC-400 — **C x C**

Part	Size	Box	Ctn	Wt
W 01000 †	1/8	100	4,000	0
W 01001 †	3/16	100	4,000	0
W 01003 †	1/4	100	4,000	0
W 01009 †	3/8	50	2,000	0.01
W 01017 †	1/2	50	1,700	0.01
W 01022 †	5/8	100	1,000	0.03
W 01028 †	3/4	50	500	0.05
W 01034 †	7/8	50	500	0.06
W 01040 †	1	25	250	0.09
W 01047 †	1-1/8	25	250	0.11
W 01055 †	1-3/8	25	250	0.15
W 01062 †	1-1/2	–	150	0.22
W 01063 †	1-5/8	10	100	0.21
W 01072 †	2-1/8	–	75	0.4
W 01082 †	2-5/8	–	50	0.66
W 01092	3-1/8	–	25	1.03
W 10100	3-5/8	–	20	1.18
W 10107	4-1/8	–	15	2.11

† UL Recognized to 700 PSI (select sizes)

COUPLING

STACKED STOP
WC-400S — **C x C**

Part	Size	Box	Ctn	Wt
W 10141 †	1/4	100	3,400	0
W 10142 †	5/16	100	5,600	0.01
W 10143 †	3/8	50	2,000	0.01
W 10144 †	1/2	50	1,700	0.01
W 10145 †	5/8	100	1,000	0.03
W 10157 †	3/4	25	500	0.04
W 10146 †	7/8	50	500	0.06
W 10147 †	1-1/8	25	250	0.11
W 10148 †	1-3/8	25	250	0.15
W 10149 †	1-5/8	10	100	0.22
W 10150 †	2-1/8	–	75	0.41
W 10151 †	2-5/8	–	50	0.66
W 10152	3-1/8	–	25	1.02
W 10153	3-5/8	–	20	1.03
W 10154	4-1/8	–	15	2.15
W 10155	5-1/8	–	8	3.34
W 10156	6-1/8	–	3	4.61
W 10130	8-1/8	–	1	14.13

COUPLING

REDUCING
WC-400R — **C x C**

Part	Size	Box	Ctn	Wt
W 01004 †	1/4 x 3/16	50	2,000	0.01
W 01005 †	x 1/8	50	2,000	0
W 01010 †	3/8 x 5/16	50	1,700	0.01
W 01011 †	x 1/4	50	2,000	0.01
W 01019 †	1/2 x 3/8	50	1,700	0.01
W 01021 †	x 1/4	50	1,200	0.02
W 01023 †	5/8 x 1/2	100	1,000	0.03
W 01025 †	x 3/8	100	1,000	0.03
W 01027 †	x 1/4	100	1,000	0.03
W 01029 †	3/4 x 5/8	100	600	0.05
W 01030 †	x 1/2	100	600	0.04
W 01031 †	x 3/8	100	600	0.04
W 01035 †	7/8 x 3/4	100	1,000	0.06
W 01036 †	x 5/8	50	500	0.08
W 01037 †	7/8 x 1/2	50	500	0.06
W 01038 †	x 3/8	50	500	0.06
W 01049 †	1-1/8 x 7/8	25	250	0.13
W 01050 †	x 3/4	25	250	0.11
W 01051 †	x 5/8	25	250	0.11
W 01052 †	x 1/2	25	250	0.11
W 01056 †	1-3/8 x 1-1/8	10	100	0.2
W 01058 †	x 7/8	10	100	0.17
W 01060 †	x 5/8	10	100	0.17
W 01064 †	1-5/8 x 1-3/8	10	100	0.23
W 01065 †	x 1-1/8	10	100	0.23
W 01067 †	x 7/8	10	100	0.24
W 01069 †	x 5/8	10	100	0.22
W 01073 †	2-1/8 x 1-5/8	–	100	0.43
W 01074 †	x 1-3/8	–	100	0.43
W 01075 †	x 1-1/8	–	100	0.46
W 01077 †	x 7/8	–	100	0.4
W 01079 †	x 5/8	–	75	0.41
W 01083 †	2-5/8 x 2-1/8	–	50	0.65
W 01084 †	x 1-5/8	–	50	0.75
W 01085 †	x 1-3/8	–	50	0.7
W 01086 †	x 1-1/8	–	50	0.71
W 01093	3-1/8 x 2-5/8	–	25	1.06
W 01094	x 2-1/8	–	25	1.1
W 01095	x 1-5/8	–	25	1.01
W 10101	3-5/8 x 3-1/8	–	25	1.22
W 10108	4-1/8 x 3-5/8	–	20	1.87
W 10109	x 3-1/8	–	20	0.76
W 10110	x 2-5/8	–	15	1.88
W 10111	x 2-1/8	–	20	1.97

45° ELBOW

WE-504 — **C x C**

Part	Size	Box	Ctn	Wt
W 03005 †	1/4	50	2,000	0.01
W 03012 †	3/8	50	2,800	0.01
W 03021 †	1/2	50	850	0.03
W 03026 †	5/8	50	500	0.04
W 03030 †	3/4	50	500	0.06
W 03034 †	7/8	25	250	0.09
W 03044 †	1-1/8	25	250	0.16
W 03050 †	1-3/8	10	100	0.25
W 03055 †	1-5/8	10	100	0.36
W 03059 †	2-1/8	10	50	0.6
W 03063 †	2-5/8	5	25	1
W 03067	3-1/8	2	20	1.53
W 03070	3-5/8	2	10	2.81
W 03073	4-1/8	–	5	3.14

45° ELBOW

STREET
WE-505 — **FTG x C**

Part	Size	Box	Ctn	Wt
W 03312 †	3/8	100	3,400	0.01
W 03321 †	1/2	100	1,500	0.03
W 03326 †	5/8	50	500	0.03
W 03330 †	3/4	50	500	0.06
W 03334 †	7/8	25	250	0.09
W 03344 †	1-1/8	25	250	0.15
W 03350 †	1-3/8	10	100	0.24
W 03355 †	1-5/8	10	100	0.33
W 03359 †	2-1/8	5	50	0.61
W 03363 †	2-5/8	2	20	1.05
W 03368	3-1/8	2	10	1.52
W 03373	4-1/8	–	5	3.11

45° ELBOW

WE-507 — **FTG x FTG**

Part	Size	Box	Ctn	Wt
W 03621 †	1/2	50	1,700	0.02
W 03626 †	5/8	50	750	0.04
W 03634 †	7/8	25	250	0.1
W 03644 †	1-1/8	10	100	0.18

90° ELBOW

SHORT RADIUS
WE-500 — **C x C**

Part	Size	Box	Ctn	Wt
W 02003 †	1/4	50	2,000	0.01
W 02009 †	3/8	50	1,700	0.02
W 02017 †	1/2	50	1,000	0.03
W 02022 †	5/8	100	1,000	0.05
W 02028 †	3/4	50	500	0.08
W 02034 †	7/8	50	500	0.11
W 02040 †	1	20	200	0.22
W 02047 †	1-1/8	25	250	0.24
W 02084 †	1-3/8	10	100	0.3
W 02085 †	1-5/8	10	100	0.42
W 02086 †	2-1/8	10	50	0.76
W 02087 †	2-5/8	5	25	1.19
W 02088	3-1/8	5	25	1.88
W 02089	3-5/8	2	10	2.77
W 02090	4-1/8	2	10	4
W 02097	6-1/8	–	1	13.73
REDUCING				
W 02011 †	3/8 x 1/4	50	750	0.02
W 02019 †	1/2 x 3/8	50	750	0.03
W 02023 †	5/8 x 1/2	50	500	0.05
W 02025 †	x 3/8	50	500	0.05
W 02029 †	3/4 x 5/8	50	500	0.06
W 02030 †	x 1/2	50	500	0.07
W 02035 †	7/8 x 3/4	50	500	0.11
W 02036 †	x 5/8	50	500	0.11
W 02037 †	x 1/2	50	500	0.11
W 02049 †	1-1/8 x 7/8	25	250	0.17
W 02050 †	x 3/4	25	250	0.16
W 02051 †	x 5/8	25	250	0.18
W 02052 †	x 1/2	25	150	0.2
W 02056 †	1-3/8 x 1-1/8	20	200	0.32
W 02077 †	1-5/8 x 1-3/8	5	100	0.33
W 02078 †	2-1/8 x 1-5/8	5	50	0.6

90° ELBOW

LONG RADIUS
WE-500L — **C x C**

Part	Size	Box	Ctn	Wt
W 02701 †	3/16	50	1,000	0
W 02715 †	1/4	50	2,000	0.01
W 02710 †	5/16	50	1,700	0.01
W 02716 †	3/8	50	1,700	0.02
W 02717 †	1/2	50	500	0.04
W 02722 †	5/8	50	500	0.06
W 02728 †	3/4	50	500	0.09
W 02734 †	7/8	25	250	0.13
W 02747 †	1-1/8	10	100	0.27
W 02055 †	1-3/8	10	100	0.42
W 02063 †	1-5/8	5	50	0.6
W 02072 †	2-1/8	5	25	1.23
W 02082 †	2-5/8	5	25	2.05
W 02092	3-1/8	2	10	3.13
W 02093	3-5/8	1	5	5.53
W 02095	4-1/8	–	1	7.98
REDUCING				
W 02711 †	3/8 x 1/4	50	3,000	0.01
W 02719 †	1/2 x 3/8	50	2,000	0.03
W 02723 †	5/8 x 1/2	50	1,000	0.04
W 02725 †	x 3/8	50	1,000	0.03
W 02735 †	7/8 x 3/4	25	250	0.12
W 02736 †	x 5/8	50	500	0.09
W 02749 †	1-1/8 x 7/8	10	100	0.17
W 02756 †	1-3/8 x 1-1/8	10	100	0.31
W 02058 †	x 7/8	10	100	0.37
W 02060 †	x 5/8	10	100	0.37
W 02064 †	1-5/8 x 1-3/8	5	50	0.44
W 02065 †	x 1-1/8	5	50	0.52
W 02067 †	x 7/8	5	50	0.51
W 02073 †	2-1/8 x 1-5/8	2	20	0.98
W 02074 †	x 1-3/8	2	20	0.94
W 02075 †	x 1-1/8	2	20	0.97
W 02083 †	2-5/8 x 2-1/8	2	20	1.53

90° ELBOW

STREET SHORT RADIUS
WE-503 — **FTG x C**

Part	Size	Box	Ctn	Wt
W 02305 †	1/4	50	2,000	0.01
W 02312 †	3/8	50	1,700	0.02
W 02321 †	1/2	50	750	0.03
W 02326 †	5/8	50	500	0.05
W 02330 †	3/4	25	250	0.09
W 02334 †	7/8	25	250	0.11
W 02344 †	1-1/8	25	250	0.22
W 02384 †	1-3/8	25	125	0.29
W 02385 †	1-5/8	10	100	0.44
W 02386 †	2-1/8	10	50	0.77
W 02387 †	2-5/8	5	25	1.23
W 02388	3-1/8	2	20	1.94
W 02389	3-5/8	1	10	2.78
W 02390	4-1/8	2	10	4.03

90° ELBOW

STREET LONG RADIUS
WE-503L — **FTG x C**

Part	Size	Box	Ctn	Wt
W 02809 †	3/8	50	1,700	0.02
W 02817 †	1/2	50	500	0.04
W 02822 †	5/8	50	500	0.06
W 02828 †	3/4	25	250	0.09
W 02834 †	7/8	25	250	0.13
W 02847 †	1-1/8	10	100	0.26
W 02350 †	1-3/8	10	100	0.42
W 02355 †	1-5/8	5	50	0.6
W 02359 †	2-1/8	5	25	1.23
W 02363 †	2-5/8	5	25	2.08
W 02368	3-1/8	2	10	3.12
W 02393	3-5/8	1	5	5.52
W 02395	4-1/8	–	1	8.07

90° ELBOW

SHORT RADIUS
WE-506 — **FTG x FTG**

Part	Size	Box	Ctn	Wt
W 02612 †	3/8	50	2,800	0.02
W 02621 †	1/2	50	750	0.03
W 02626 †	5/8	50	500	0.05
W 02634 †	7/8	25	250	0.11
W 02644 †	1-1/8	10	100	0.22
W 02684 †	1-3/8	10	100	0.31
W 02685 †	1-5/8	5	50	0.43
W 02686 †	2-1/8	1	10	0.79
W 02687 †	2-5/8	1	10	1.25
W 02688	3-1/8	1	10	2.08
W 02689	3-5/8	1	10	2.63
W 02690	4-1/8	1	5	3.88

90° ELBOW

LONG RADIUS
WE-506L — **FTG x FTG**

Part	Size	Box	Ctn	Wt
W 02650 †	1-3/8	5	50	0.44
W 02655 †	1-5/8	5	50	0.63
W 02659 †	2-1/8	1	10	1.23

90° ELBOW

FORGED BRASS
WE-502 — **C x F**

Part	Size	Box	Ctn	Wt
W 02206	1/4 x 1/4	50	450	0.1
W 02207	x 1/8	50	800	0.07
W 02214	3/8 x 3/8	50	600	0.1
W 02216	x 1/8	50	700	0.08
W 02225	x 3/8	25	300	0.11
W 02226	x 1/4	25	350	0.1

90° ELBOW

FORGED BRASS
WE-501 — **C x M**

Part	Size	Box	Ctn	Wt
W 02106	x 1/4	50	700	0.07
W 02107	x 1/8	50	1,200	0.04
W 02115	x 1/4	50	800	0.06
W 02116	x 1/8	50	800	0.06
W 02125	x 3/8	25	400	0.1
W 02132	x 3/8	10	240	0.16

FITTING REDUCER

WC-403 — **FTG x C**

Part	Size	Box	Ctn	Wt
REDUCING				
W 01302 †	1/4 x 1/8	50	2,000	0
W 01306 †	3/8 x 1/4	50	2,000	0.01
W 01312 †	1/2 x 3/8	50	2,000	0.02
W 01314 †	x 1/4	50	2,800	0.01
W 01315 †	5/8 x 1/2	50	750	0.03
W 01317 †	x 3/8	50	1,700	0.02
W 01320 †	3/4 x 5/8	100	1,000	0.04
W 01321 †	x 1/2	100	900	0.04
W 01322 †	x 3/8	100	900	0.04
W 01325 †	7/8 x 3/4	50	500	0.06
W 01326 †	x 5/8	50	500	0.06
W 01327 †	x 1/2	50	500	0.06
W 01337 †	1-1/8 x 7/8	25	250	0.11
W 01338 †	x 3/4	25	250	0.1
W 01339 †	x 5/8	25	250	0.1
W 01340 †	x 1/2	20	200	0.1
W 01343 †	1-3/8 x 1-1/8	10	100	0.17
W 01345 †	x 7/8	10	100	0.17
W 01347 †	x 5/8	10	100	0.16
W 01350 †	1-5/8 x 1-3/8	10	100	0.23
W 01351 †	x 1-1/8	10	100	0.24
W 01353 †	x 7/8	10	100	0.23
W 01355 †	x 5/8	10	100	0.22
W 01358 †	2-1/8 x 1-5/8	–	100	0.44
W 01359 †	x 1-3/8	–	100	0.43
W 01360 †	x 1-1/8	–	100	0.45
W 01362 †	x 7/8	–	100	0.43
W 01364 †	x 5/8	–	100	0.42

FITTING REDUCER (CONT.)

Part	Size	Box	Ctn	Wt
W 01367 †	2-5/8 x 2-1/8	–	50	0.62
W 01368 †	x 1-5/8	–	50	0.57
W 01369 †	x 1-3/8	–	50	0.62
W 01370 †	x 1-1/8	–	50	0.63
W 01376 †	3-1/8 x 2-5/8	–	25	1
W 01377	x 2-1/8	–	25	0.89
W 01379	x 1-3/8	–	50	1.01
W 01381	3-5/8 x 3-1/8	–	20	1.28
W 01382	x 2-5/8	–	20	1.37
W 01383	x 2-1/8	–	20	1.47
W 01386	4-1/8 x 3-5/8	–	20	1.74
W 01387	x 3-1/8	–	15	1.77
W 01388	x 2-5/8	–	15	1.83
W 01389	x 2-1/8	–	15	1.86

HANGER

HI-EAR
W-124 — **C**

Part	Size	Box	Ctn	Wt
A 03167	5/8	100	10,000	0.03
A 03168	7/8	25	500	0.04
A 03171	1-1/8	25	250	0.04

P-TRAP

SUCTION LINE
WE-554P — **C x C**

Part	Size	Box	Ctn	Wt
W 60999	5/8	10	50	0.38
W 61008	3/4	10	50	0.51
W 61000	7/8	5	25	0.63
W 61001	1-1/8	3	15	0.87
W 61002	1-3/8	4	20	1.16
W 61003	1-5/8	4	4	2.28
W 61009	2-1/8	–	3	3.87

P-TRAP

SUCTION LINE
LONG RADIUS
WE-554PL — **C x C**

Part	Size	Box	Ctn	Wt
W 60998	5/8	30	150	0.15
W 60997	3/4	20	100	0.3
W 60996	7/8	15	75	0.36
W 60995	1-1/8	15	75	0.58
W 60994	1-3/8	5	25	0.97
W 60993	1-5/8	–	5	1.84
W 60992	2-1/8	–	3	3.61

PLUG

FITTING
WC-416 — **FTG**
(SIZES 1/8 THRU 1 1/2 BRASS ROD)

Part	Size	Box	Ctn	Wt
A 01402	1/4	50	500	0.01
A 01422	3/8	100	4,000	0.01
A 01392	1/2	50	2,000	0.02
A 01504	5/8	50	1,200	0.03
A 01529	7/8	50	600	0.07
A 01556	1-1/8	25	375	0.12
A 01590	1-3/8	15	180	0.2
A 01628	1-5/8	10	120	0.28

RETURN BEND

WE-512 — **C x C**

Part	Size	Box	Ctn	Wt
W 06025	3/8 x 4-1/2	25	150	0.1
W 06020	x 1-1/2	25	850	0.02
W 06048	1/2 x 6	–	100	0.21
W 06045	x 4	–	200	0.14
W 06041	x 3	25	250	0.11
W 06036	x 2	50	300	0.06
W 06035	x 12-9/32	50	300	0.08
W 06032	x 1-1/2	50	500	0.06
W 06069	5/8 x 6	5	30	0.3
W 06062	x 3-3/8	10	100	0.18
W 06060	x 3	25	150	0.16

RETURN BEND (CONT.)

Part	Size	Box	Ctn	Wt
W 06058	x 2-1/2	25	250	0.14
W 06056	x 2-1/4	25	250	0.13
W 06053	x 1-7/8	25	250	0.11
W 06051	x 19/16	25	250	0.1
W 06084	3/4 x 4	–	120	0.25
W 06081	x 3-3/8	10	90	0.24
W 06077	x 2-1/2	10	100	0.17
W 06074	x 2-1/8	10	100	0.16
W 06073	x 2	10	100	0.15
W 06099	7/8 x 12	–	15	0.88
W 06095	x 3-3/8	10	100	0.29
W 06092	x 2-1/2	10	100	0.23
W 60111	1-1/8 x 3-1/4	5	50	0.49
W 60110	x 3	5	50	0.47
W 60121	1-3/8 x 3-3/4	5	50	0.65
W 60131	1-5/8 x 4-1/2	5	25	1
W 60140	2-1/8 x 5-1/2	5	25	1.92

TEE

WT-600 — **C x C x C**

Part	Size	Box	Ctn	Wt
W 40302 †	3/16	50	1,700	0.01
W 40306 †	1/4	100	2,400	0.01
W 40313 †	5/16	50	1,700	0.01
W 04000 †	3/8	50	1,700	0.02
W 04001 †	1/2	50	500	0.04
W 04006 †	5/8	50	500	0.07
W 04017 †	3/4	25	250	0.12
W 04031 †	7/8	25	250	0.16
W 04048 †	1-1/8	10	100	0.29
W 04068 †	1-3/8	5	50	0.42
W 04084 †	1-5/8	5	50	0.6
W 40102 †	2-1/8	5	25	1.14
W 40123 †	2-5/8	2	20	1.72
W 40152	3-1/8	2	10	2.77
W 40190	3-5/8	1	5	5.66
W 40200	4-1/8	1	5	5.99
W 40400	5-1/8	–	1	12.38
W 40500	6-1/8	–	1	20.85
REDUCING				
W 40368 †	1/4x1/4x3/8	50	750	0.03
W 40308 †	x 3/16	50	2,000	0.01
W 40334 †	5/16x5/16x3/8	50	750	0.03
W 04016 †	3/8x3/8x5/8	50	500	0.08
W 04005 †	x 1/2	50	500	0.04
W 40324 †	x 1/4	50	1,700	0.02
W 40330 †	x 1/4 x 3/8	50	500	0.02
W 40332 †	x 1/4	50	1,700	0.02
W 04015 †	1/2x1/2x5/8	50	500	0.09
W 04002 †	x 3/8	50	500	0.04
W 40350 †	x 1/4	50	500	0.04
W 04003 †	x 3/8x1/2	50	500	0.05
W 04004 †	x 3/8	50	500	0.04
W 40358 †	x 1/4	50	750	0.04
W 40363 †	x 1/4x1/2	50	750	0.05
W 40364 †	x 3/8	50	750	0.04
W 40366 †	x 1/4	50	450	0.05
W 04067 †	5/8x5/8x1-1/8	10	100	0.35
W 04047 †	x 7/8	25	250	0.11
W 04029 †	x 3/4	25	250	0.1
W 04007 †	x 1/2	50	500	0.08
W 04008 †	x 3/8	50	500	0.06
W 04014 †	x 1/4	50	500	0.08
W 04009 †	x 1/2x5/8	50	500	0.09
W 04010 †	x 1/2	50	500	0.08
W 04011 †	x 3/8	50	500	0.08
W 04012 †	x 3/8x5/8	50	500	0.09
W 40367 †	x 1/2	50	500	0.08
W 04013 †	x 3/8	50	500	0.09
W 04046 †	3/4x3/4x7/8	25	250	0.15
W 04018 †	x 5/8	25	250	0.1
W 04019 †	x 1/2	25	250	0.1
W 04020 †	x 3/8	25	250	0.1
W 04021 †	x 5/8x 3/4	25	225	0.13
W 04022 †	x 5/8	25	250	0.11
W 04023 †	x 1/2	25	225	0.11
W 04025 †	x 1/2x3/4	25	250	0.15
W 04026 †	x 5/8	25	225	0.14
W 04027 †	x 1/2	25	250	0.11
W 04065 †	7/8x7/8x1-1/8	10	100	0.22

TEE (CONT.)

Part	Size	Box	Ctn	Wt
W 04032	x 3/4	25	250	0.17
W 04033	x 5/8	25	250	0.12
W 04034	7/8x7/8x1/2	25	250	0.11
W 04035	x 3/8	25	250	0.11
W 04036	x 3/4 x 7/8	25	250	0.19
W 04037	x 3/4	25	250	0.17
W 04041	x 5/8 x 7/8	25	250	0.16
W 04042	x 3/4	25	150	0.17
W 04043	x 5/8	25	250	0.13
W 04044	x 1/2	25	250	0.12
W 04045	x 3/8	25	225	0.15
W 40101	1-1/8x1-1/8x1-5/8	5	50	0.47
W 04082	x 1-3/8	5	50	0.31
W 04049	x 7/8	10	100	0.24
W 04050	x 3/4	10	100	0.27
W 04051	x 5/8	10	100	0.21
W 04052	x 1/2	10	100	0.19
W 04055	x 7/8x1-1/8	10	100	0.3
W 04056	x 7/8	10	100	0.25
W 04057	x 3/4	10	90	0.43
W 04058	x 5/8	10	100	0.23
W 04059	x 1/2	10	100	0.21
W 40233	x 3/4x11/8	10	100	0.33
W 40234	x 7/8	10	90	0.3
W 40235	x 3/4	10	100	0.31
W 40236	x 5/8	10	90	0.35
W 04061	x 5/8x1-1/8	10	100	0.3
W 04062	x 7/8	10	100	0.28
W 04063	x 5/8	10	100	0.21
W 40122	1-3/8x1-3/8x2-1/8	2	20	0.89
W 40100	x 1-5/8	5	50	0.49
W 04069	x 1-1/8	5	50	0.41
W 04070	x 7/8	5	50	0.35
W 04071	x 5/8	5	50	0.32
W 04072	x 1/2	5	50	0.29
W 04073	x 1-1/8 x1-3/8	5	50	0.48
W 04074	x 1-1/8	5	50	0.46
W 04075	x 7/8	5	50	0.38
W 04076	x 5/8	5	50	0.36
W 04078	x 7/8 x 1-3/8	5	50	0.45
W 04079	x 1-1/8	5	50	0.46
W 04080	x 7/8	5	50	0.37
W 04081	x 5/8	5	50	0.34
W 04083	x 5/8 x 1-3/8	5	50	0.57
W 40121	1-5/8x1-5/8x2-1/8	2	20	1.21
W 04085	x 1-3/8	5	50	0.57
W 04086	x 1-1/8	5	50	0.52
W 04087	x 7/8	5	50	0.47
W 04088	x 5/8	5	50	0.42
W 04089	x 1/2	5	50	0.41
W 04090	x 1-3/8x1-5/8	5	50	0.68
W 04091	x 1-3/8	5	50	0.69
W 04092	x 1-1/8	5	50	0.57
W 04093	x 7/8	5	50	0.57
W 04094	x 5/8	5	50	0.45
W 04095	x 1-1/8x1-5/8	5	50	0.68
W 04096	x 1-3/8	5	50	0.65
W 04097	x 1-1/8	5	50	0.61
W 04098	x 7/8	5	50	0.56
W 40237	x 5/8	5	30	0.45
W 04099	x 7/8 x 1-5/8	5	50	0.67
W 40239	x 1-3/8	5	50	0.75
W 40240	x 1-1/8	5	50	0.52
W 40238	x 7/8	5	50	0.55
W 40243	x 5/8	5	50	0.47
W 40244	x 5/8 x 15/8	5	50	0.66
W 40153	2-1/8x2-1/8x3-1/8	1	10	2.55
W 40144	x 2-5/8	1	10	1.46
W 40103	x 1-5/8	5	50	0.99
W 40104	x 1-3/8	5	50	0.85
W 40105	x 1-1/8	5	50	0.88
W 40106	x 7/8	5	50	0.83
W 40107	x 5/8	5	50	0.67
W 40108	x 1/2	2	20	0.68
W 40109	x 1-5/8x2-1/8	2	20	1.31
W 40110	x 1-5/8	2	20	1.15
W 40111	x 1-3/8	2	20	0.86
W 40112	x 1-1/8	2	20	1.06
W 40113	x 7/8	2	20	0.75
W 40114	x 5/8	5	50	0.77
W 40115	x 1-3/8x2-1/8	2	20	1.3
W 40116	x 1-5/8	2	20	1.14
W 40117	x 1-3/8	2	20	1.09

TEE (CONT.)

Part	Size	Box	Ctn	Wt
W 40118	x 1-1/8	2	20	0.95
W 40119	x 7/8	5	50	0.76
W 40120	x 5/8	5	20	0.78
W 40245	x 1-1/8x2-1/8	5	25	1.64
W 40247	x 1-1/8	5	50	1.06
W 40248	x 7/8 x 2-1/8	5	25	1.71
W 40249	x 5/8 x 2-1/8	5	25	1.66
W 40124	2-5/8x2-5/8x2-1/8	2	20	1.59
W 40125	x 1-5/8	2	20	1.49
W 40126	x 1-3/8	2	20	1.87
W 40127	x 1-1/8	2	20	1.83
W 40128	x 7/8	1	10	1.83
W 40129	x 5/8	1	10	2.05
W 40130	x 21/8x2-5/8	4	20	2.3
W 40131	x2-1/8	2	20	1.84
W 40132	x 1-5/8	4	20	2.09
W 40133	x 1-3/8	4	20	2.12
W 40134	x 1-1/8	4	20	2.1
W 40135	x 7/8	4	20	2.06
W 40136	x 5/8	4	20	2.2
W 40137	x 1-5/8x2-5/8	4	20	2.32
W 40138	x 2-1/8	4	20	1.84
W 40139	x 1-5/8	4	20	2.11
W 40140	x 1-3/8	4	20	2.17
W 40141	x 1-1/8	4	20	1.83
W 40142	x 7/8	4	20	2.36
W 40143	x 5/8	4	20	2.36
W 40220	x 1-3/8x2-5/8	4	20	2.35
W 40250	x 2-1/8	4	20	1.82
W 40251	x 1-5/8	4	20	2.47
W 40252	x 1-3/8	4	20	1.96
W 40253	x 1-1/8	4	20	2.47
W 40254	x 7/8	4	20	2.18
W 40255	x 5/8	4	20	2.47
W 40221	x 1-1/8x2-5/8	4	20	2.39
W 40256	x 2-1/8	4	20	1.97
W 40257	x 1-5/8	4	20	2.15
W 40258	x 1-3/8	4	20	2.04
W 40259	x 1-1/8	4	20	2.27
W 40222	x 7/8x2-5/8	4	20	2.41
W 40151	3-1/8x3-1/8x2-5/8	2	10	2.45
W 40150	x 2-1/8	2	20	2.3
W 40149	x 1-5/8	2	10	2.18
W 40148	x 1-3/8	2	10	2.38
W 40147	x 1-1/8	2	20	1.96
W 40146	x 7/8	2	20	1.49
W 40145	x 5/8	2	20	1.38
W 40159	x 2-5/8x3-1/8	2	10	2.96
W 40158	x 2-5/8	2	10	4.52
W 40157	x 2-1/8	2	10	2.68
W 40156	x 1-5/8	2	10	2.63
W 40155	x 1-3/8	2	10	2.62
W 40154	x 1-1/8	2	20	2.02
W 40167	x 2-1/8x3-1/8	2	10	3.07
W 40165	x 2-5/8	2	10	4.64
W 40164	x 2-1/8	2	10	2.75
W 40163	x 1-5/8	2	10	2.57
W 40162	x 1-3/8	2	10	2.61
W 40161	x 1-1/8	2	20	2.04
W 40174	x 1-5/8x3-1/8	2	10	2.97
W 40181	x 1-3/8x3-1/8	2	10	3.14
W 40178	x 1-1/8x3-1/8	2	10	3.02
W 40179	x 7/8x3-1/8	2	10	3.03
W 40198	4-1/8x4-1/8x3-1/8	1	5	4.94
W 40197	x 2-5/8	1	5	5.16
W 40196	x 2-1/8	1	10	4.52
W 40195	x 1-5/8	1	10	4.47
W 40194	x 1-3/8	1	10	4.55
W 40193	x 1-1/8	1	10	3.05
W 40192	x 7/8	1	10	2.89
W 40191	x 5/8	1	10	2.89
W 40208	x 3-1/8x4-1/8	1	5	8.66
W 40206	x 3-1/8	1	5	5.12
W 40205	x 2-5/8	1	5	5.61
W 40204	x 2-1/8	1	5	4.76
W 40212	x 2-5/8x4-1/8	1	5	7.79
W 40216	x 2-1/8x4-1/8	1	5	8.95
W 40215	x 1-5/8x41/8	1	5	8.51
W 40214	4-1/8x1-3/8x4-1/8	1	5	8.57
W 40213	x 1-1/8x4-1/8	1	5	9.33
W 40503	6-1/8x6-1/8x3-1/8	–	1	11
W 40504	x 2-5/8	–	1	11.1
W 40505	x 2-1/8	–	1	9.54

TEE

FORGED BRASS
WT-602

C x C x C

Part	Size	Box	Ctn	Wt
W 04208	1/4x1/4x1/4	50	450	0.09
W 04209	x 1/8	50	1,200	0.04
W 04228	3/8x3/8x3/8	25	350	0.15
W 04229	x 1/4	25	400	0.1
W 04230	x 1/8	10	400	0.11
W 04259	1/2x1/2x3/8	10	240	0.15
W 04283	5/8x5/8x1/2	10	150	0.33

TEE

FITTING
WT-600F

C x FTG x C

Part	Size	Box	Ctn	Wt
W 04106	5/8	50	300	0.1
W 04131	7/8	25	150	0.19

UNION

WC-407

C x C

Part	Size	Box	Ctn	Wt
W 08001	3/8	25	250	0.12
W 08002	1/2	25	250	0.11
W 08003	5/8	25	250	0.16
W 08004	7/8	25	150	0.37
W 08005	1-1/8	10	100	0.52

COPPER TUBE STRAP

2-HOLE
WS-1100

Part	Size	Box	Ctn	Wt
A 01203	1/4	100	4,000	0.01
A 01278	3/8	100	5,600	0.01
A 01366	1/2	100	3,400	0.01
A 02529	5/8	100	1,500	0.01
A 01467	3/4	100	2,000	0.01
A 02574	7/8	50	750	0.01
A 02614	1-1/8	50	750	0.02
A 02650	1-3/8	50	500	0.04
A 02675	1-5/8	50	500	0.05
A 02708	2-1/8	50	500	0.06

PERFORATED COPPER STRAP

WS-1101

Part	Size	Box	Ctn	Wt
A 01211	25 Ft.Roll	1	10	1.63

COPPER FITTING DATA

TEMPERATURE - PRESSURE RATINGS OF SOLDER JOINTS					
ALLOYS USED FOR JOINTS	SERVICE TEMPERATURE °F	STANDARD TUBE SIZE, TYPES K, L, AND M			
		WATER AND NON-CORROSIVE LIQUIDS & GASES			
		1/4 to 1	1-1/4 to 2	2-1/2 to 4	5 to 8
50 / 50 Tin Lead Solder Not to be used in potable water systems	100	200	175	150	135
	150	150	125	100	90
	200	100	90	75	70
	250	85	75	50	45
95 / 5 Tin-Antimony Solder	100	1090	850	705	660
	150	625	485	405	375
	200	505	395	325	305
	250	270	210	175	165
Alloy E Solder	100	710	555	460	430
	150	475	370	305	285
	200	375	290	240	225
	250	320	250	205	195
Alloy HB Solder	100	1035	805	670	625
	150	710	555	460	430
	200	440	345	285	265
	250	430	335	275	260
Brazing Alloys (melting at or above 1000°F)	Pressure-temperature ratings is that of the tubing being used				

Note: Ratings are those given in ASME B 16.22 "Wrought Copper and Copper Alloy Solder Joint Pressure Fittings." (a) Solder alloys are covered by ASTM Standard Specification B32. The Safe Drinking Water Act Amendment of 1986 prohibits the use of any solder having a lead content in excess of 02% for potable water systems.

PRESSURE LOSS IN FITTINGS EXPRESSED AS EQUIVALENT LENGTH OF TUBE, FEET						
Normal or Standard in Inches	Wrot Copper Fittings					
	90 Degree Ell	45 Degree Ell	Tee Straight Run	Tee Side Branch	Coupling	180 Degree Bend
3/8	0.5	0.5	0.5	1	-	0.5
1/2	0.5	0.5	0.5	1	-	1
5/8	0.5	0.5	0.5	2	-	1
3/4	1	0.5	0.5	2	-	2
1	1	1	0.5	3	-	2
1-1/4	2	1	0.5	4	0.5	3
1-1/2	2	2	1	5	0.5	4
2	2	2	1	7	0.5	8
2-1/2	2	3	2	9	0.5	16
3	3	4	-	-	1	20

COPPER TUBE AND SOLDER TYPE FITTINGS

1. Cut tube square with the cutter or fine hack saw (32 tooth blade is recommended). Remove Burr.

2. Clean outside end of copper tube thoroughly with sand cloth or sandpaper equal depth of fitting. Leave no dark spots.

3. Clean inside of fitting carefully to tube stop with wire brush. Note: Sand cloth or sandpaper may also be used.

4. Using a brush, apply light uniform coat of soldering flux to the outside of the tube and inside of the fitting.

5. Slip tube into fitting to tube stop. Turn tube back and forth once or twice to distribute flux evenly.

6. Apply heat uniformly around the fitting with torch. When solder melts upon contact with heated fitting, the proper soldering temperature has been reached. Remove flame and feed solder slightly off center at the bottom of the joint. Proceed across the bottom of the fitting and up to the top center position. Return to the starting point, and then proceed up the incomplete side to the top, again, overlapping the solder metal. Wipe off surplus solder with a piece of cloth.

CAUTION: No not overheat the joint or direct the flame into the face of the fitting cup. Overheating could burn the flux, which will destroy its effectiveness and the solder will not enter the joint properly.

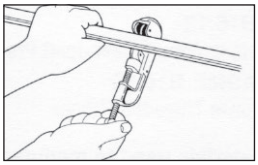

1. Cut tube to length & remove burr with file or scraper.

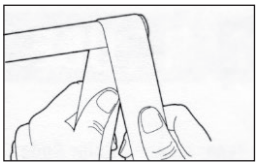

2. Clean outside of tube with sandpaper or sand cloth.

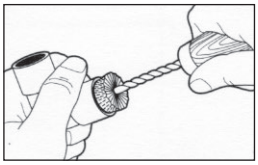

3. Clean inside of fitting with wire brush, sand cloth or sandpaper.

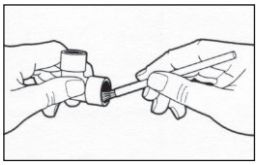

4. Apply flux thoroughly to inside of fitting.

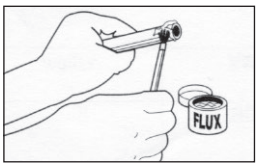

5. Apply flux thoroughly to outside of tube - assemble tube and fitting.

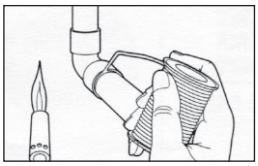

6. Apply heat with torch. When solder melts upon contact with heated fitting, the proper temp for soldering has been reached. Remove flame & feed solder to the joint at one or two points until a ring of solder appears at the end of the fitting.

aerospace
climate control
electromechanical
filtration
fluid & gas handling
hydraulics
pneumatics
process control
sealing & shielding

ZoomLock® MAX

Press-to-Connect Refrigerant Fittings

Catalog K-3, Engineering Submittal, June 2021

Parker

ENGINEERING YOUR SUCCESS.

PARKER SAFETY GUIDE FOR SELECTING AND USING ZOOMLOCK MAX FITTINGS AND RELATED ACCESSORIES

WARNING

FAILURE TO FOLLOW INSTALLATION INSTRUCTIONS, IMPROPER SELECTION OR IMPROPER USE OF ZOOMLOCK MAX FITTINGS AND RELATED ACCESSORIES ("PRODUCTS") CAN CAUSE DEATH, PERSONAL INJURY AND PROPERTY DAMAGE. POSSIBLE CONSEQUENCES OF FAILURE, IMPROPER SELECTION OR IMPROPER USE OF THESE PRODUCTS INCLUDE BUT ARE NOT LIMITED TO:

- Fittings thrown off at high speed.
- High velocity fluid discharge.
- Explosion or burning of the conveyed fluid.
- Electrocution from high voltage electric power lines.
- Contact with suddenly moving or falling objects that are controlled by the conveyed fluid.
- Injections by high-pressure fluid discharge.
- Dangerously whipping copper line.
- Contact with conveyed fluids that may be hot, cold, toxic or otherwise injurious.
- Sparking or explosion caused by static electricity buildup or other sources of electricity.
- Sparking or explosion from flammable liquids.

ZOOMLOCK MAX FITTINGS CAN ONLY BE CONNECTED WITH JAWS/TOOLS DESIGNED FOR USE WITH ZOOMLOCK MAX PRODUCTS. BEFORE SELECTING OR USING ANY OF THESE PRODUCTS, IT IS IMPORTANT THAT YOU READ AND FOLLOW THE INSTALLATION INSTRUCTIONS.

KEY STEPS FOR SAFETY

ZoomLock MAX fittings are intended to be installed by HVAC/R professionals that have been trained specifically on ZoomLock MAX products. For product training visit www.zoomlocktraining.com.

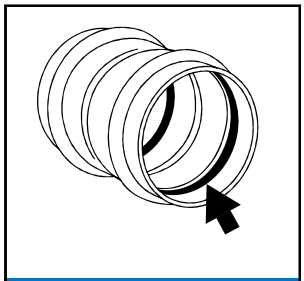

ENSURE O-RING IS SEATED

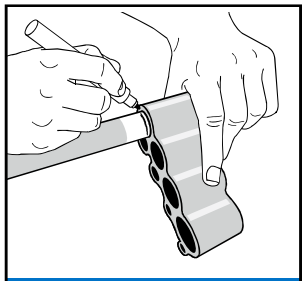

MARK TUBE DEPTH

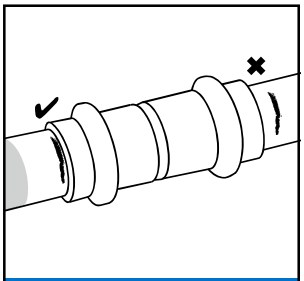

CHECK TUBE DEPTH

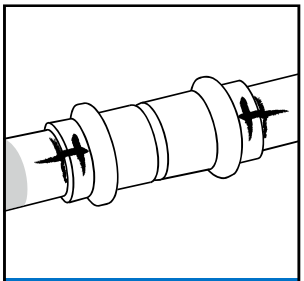

MARK THE COMPLETED JOINT

⚠ WARNING – USER RESPONSIBILITY

Failure or improper selection or improper use of the products described herein or related items can cause death, personal injury and property damage.

This document and other information from Parker Hannifin Corporation, its subsidiaries and authorized distributors provide product or system options for further investigation by users having technical expertise.

The user, through its own analysis and testing, is solely responsible for making the final selection of the system and components and assuring that all performance, endurance, maintenance, safety and warning requirements of the application are met. The user must analyze all aspects of the application, follow applicable industry standards, and follow the information concerning the product in the current product catalog and in any other materials provided from Parker or its subsidiaries or authorized distributors.

To the extent that Parker or its subsidiaries or authorized distributors provide component or system options based upon data or specifications provided by the user, the user is responsible for determining that such data and specifications are suitable and sufficient for all applications and reasonably foreseeable uses of the components or systems.

For safety information see the Safety Guide at www.parker.com/safety or call 1-800-CParker.

OFFER OF SALE

The items described in this document are hereby offered for sale by Parker Hannifin Corporation, its subsidiaries or its authorized distributors. This offer and its acceptance are governed by the provisions stated in the detailed "Offer of Sale" elsewhere in this document or available at www.parker.com.

Catalog K-3, June 2021 supersedes Catalog K-3, May 2021 and all prior publications.

ZoomLock MAX

Press-to-Connect Refrigerant Fittings

TABLE OF CONTENTS

Fittings page 9

Press Tools page 7

Jaws page 8

Compatible Components

To make a system convenient to install, ODM x ODM ZoomLock compatible components are available including:

- **Ball Valves**
- **Moisture and Liquid Indicators**
- **Solenoid Valves**
- **Filter-Driers**

ATTENTION!

WARRANTY COULD BE VOID IF ZOOMLOCK MAX IS NOT APPLIED PER INSTRUCTIONS! CAREFULLY READ ALL INSTALLATION INSTRUCTIONS (SEE PAGES 20-22) AND WATCH VIDEOS.

ZoomLockMAX.com

Connect Copper in Seconds,
Improves Profitability for HVACR Companies

Rated up to
700 psi
48 bar

ZoomLock® MAX

PRESS-TO-CONNECT REFRIGERANT FITTINGS

ZoomLock® MAX fittings, designed for the air conditioning and refrigeration markets, allow contractors to make secure leak-free connections in seconds. It means less time on the job and more money in the contractor's pocket.

ZoomLock MAX fittings provide clean, leak-proof connections for refrigerant lines up to 700 psi. By eliminating concerns about gas and flames, ZoomLock MAX fittings offer more flexibility in where and when you can work, plus there's no need to nitrogen-purge the lines.

The ZoomLock MAX Advantage

- Hermetically sealed packaging for debris-free fittings
- Hard, robust copper fittings made from refrigerant grade copper
- Proven three-point press technology providing a leak-free and secure joint
- No more crimp gauge needed—connect the fitting with one complete cycle
- Jaws available for most professional crimping tool brands, both large and compact

Parker

HELPING YOUR BUSINESS WIN **MORE** BUSINESS™

ZoomLock MAX

Press-to-Connect Refrigerant Fittings

FEATURES AND BENEFITS

- **Flame-free:**
  Flame-free installation avoids the need for a fire permit and the risk of fire on site.
- **No Nitrogen Purge:**
  ZoomLock MAX is a mechanical joint, thus eliminating the need for nitrogen purge during the jointing process.
- **Lower Installed Cost:**
  A professional fitting which is quick and simple to install, saving time and money.
- **Higher Productivity, Improved Flexibility:**
  Work may be completed during working hours / public access, by a single employee.
- **Site Access:**
  Easy access to work sites, no gas bottles required.
- **Quality Designed In:**
  Reliable, repeatable, permanent, tamper-proof connections every time.
- **3-Point Press:**
  Three press points, one each side of the bead, and one press compressing the O-ring. This provides a secure joint.
- **High Quality O-ring:**
  High quality HNBR O-ring forms a secure leak-free joint when pressed.
- **Protected O-ring:**
  Lead-in edge design aids tube insertion and helps protect the O-ring from damage or displacement.
- **Electrical Continuity:**
  Maintains ground continuity without the need for additional ground continuity straps.
- **Field Proven:**
  Press fit technology, field proven over two decades and millions of installed fittings worldwide.
- **Compact Tooling:**
  Light compact tooling provides easy access to tightly spaced tube runs.
- **Tooling Concept:**
  Only specially designed ROTHENBERGER jaws are approved for use with ZoomLock MAX fittings.
- **Certification:**
  ZoomLock MAX is UL listed, refrigerant fitting SA7511.
  ZoomLock MAX is UL listed, approved use for field and factory installations.
- **Support:**
  Backed by ZoomLock's experienced technical support and customer service teams.

Applications

ZoomLock MAX fittings are designed for the following applications:

- **Refrigeration**
- **Air Conditioning**
- **Heat Pump (Refrigeration side)**
- **VRF and VRV**

ZoomLock MAX

Press-to-Connect Refrigerant Fittings

TECHNICAL DATA

Product Parameters

- **Applications:**
  - Refrigeration
  - Air Conditioning
  - Heat Pump (Refrigeration side)
  - VRF and VRV
- **Continuous Operating Temperature:**
  -40°F to 250°F / -40°C to 121°C
- **O-ring Temperature Range:**
  -40°F to 284°F / -40°C to 140°C
- **Maximum Rated Operating and Abnormal Pressure:**
  700 psi / 48 bar / 4800 kPa
- **Burst Pressure:**
  >3X Maximum operating and abnormal pressure
  >2,100 psig / >14400 kPa / >144 bar
- **Vacuum Pressure Capability:**
  200 Microns
- **Leak Tightness:**
  Helium ≤ 7.5×10^{-7} Pa.m³/s at +20°C, 10 bar
- **Size Availability (Inches):**
  1/4, 3/8, 1/2, 5/8, 3/4, 7/8, 1-1/8, 1-3/8

Fitting Materials

- **Fitting Body:**
  Refrigerant Grade Copper (UNS C12200 min 99.9% pure)
- **O-Ring:**
  HNBR

Fitting Warranty

- 10-year warranty. Refer to page 26 for more details.

Compatibility

- **Approved Lubricants:** POE, PAO, PVE, AB and MO
- **Approved Connections:**
  Copper to Copper
- **Approved Tube:**
  Copper tube conforming to*
  ASTM B280, ASTM B88, or ASTM B743
- **Approved Copper Tubing:**
  Hard Copper (Drawn)
  - Type ACR, L, K

  Soft Copper (Annealed)
  - Type ACR, L, K

Approved Refrigerants

32**	422D	454A**
125	427A	454B**
134a	438A	454C**
290**	444A**	457A**
404A	447A**	459A**
407A	447B**	507A
407C	448A	513A
407F	449A	513B
407H	450A	600A**
410A	452A	718
417A	452B**	1234yf**
421A	452C	1234ze**
422B	HYCOOL 20	

* Please refer to ZoomLock MAX Tube Compatibility Table, page 18.

** When using refrigerants classified A2L (lower flammability), A2 (flammable) and A3 (higher flammability) additional/specific standards, local rules and regulations, codes of practice and by-laws may be applicable.

ZoomLock MAX fittings are NOT suitable for R-717, R-723, R-764, R-744 refrigerants. Refer to ZoomLockMAX.com for the latest approved refrigerants list.

Agency Approvals and Certifications

- UL Listed Refrigerant fitting SA7511
- UL Listed: Approved use for field and factory installations
- UL 109 - 7 Pull test, compliant
- UL 109 - 8 Vibration test, compliant
- UL 1963 - 79 Tests of gaskets and seals used in refrigerant systems, compliant
- ISO 5149-2:2014, Refrigerating systems and heat pumps - Safety and environmental requirements - Part 2: Design, construction, testing, marking and documentation compliant
- ISO 5149-2, 5.3.2.2.3 Strength pressure test, compliant
- ISO 14903 - 7.4 Tightness test, compliant
- ISO 14903 - 7.6 Pressure temperature vibration tests (PTV), compliant
- ISO 14903 - 7.8 Freezing test, compliant
- ASTM G85 salt spray (fog) compliant
- ASHRAE 15 - 2016 Safety Standard for Refrigeration Systems, compliant
- ASME B31.5 - 2016 Refrigeration Piping and Heat Transfer Components, compliant
- 2018, 2015, 2012, 2009 and 2006 International Mechanical Code (IMC), certified, ICC-ES, PMG-1440
- 2018, 2015, 2012, 2009 and 2006 International Residential Code (IRC), certified, ICC-ES, PMG-1440
- 2018, 2015, 2012, 2009 and 2006 Uniform Mechanical Code (UMC), certified, ICC-ES, PMG-1440

Mechanical joints shall not be used on annealed temper copper tube in sizes larger than 7/8 inch (22.2 mm) OD size per International Mechanical Code (IMC) and 3/4 inch nominal size per Uniform Mechanical Code (UMC).

Quality Assurance

ZoomLock MAX is manufactured in an ISO 9001 certified facility committed to providing quality products and support.

ZoomLock MAX

Press-to-Connect Refrigerant Fittings

PRESS TOOLS AND JAWS

Parker Hannifin recommends the use of ROTHENBERGER press tools in combination with ZoomLock MAX ROTHENBERGER jaws. However other press tools may be used in combination with ZoomLock MAX ROTHENBERGER jaws. See table below for tool compatibility.

Press Tools

ROTHENBERGER ROMAX 4000
Includes the ROTHENBERGER ROMAX® 32 kN press tool, 2 batteries and battery charger.

- **Description:** MZK-TK-R4000
- **Part Number:** 871441

ROTHENBERGER Twin Turbo US
Includes the ROTHENBERGER Twin Turbo US 24 kN press tool, 2 batteries and battery charger.

- **Description:** MZK-TK-RCTT
- **Part Number:** 871439

ROTHENBERGER ROMAX 4000 32 kN

ROTHENBERGER Twin Turbo US 24 kN

COMPATIBLE PRESS TOOLS		32 kN	24 kN	19 kN
ROTHENBERGER	ROMAX® 3000	✔	—	—
	ROMAX® 3000 AC	✔	—	—
	ROMAX® 4000	✔	—	—
	ROMAX® AC ECO	✔	—	—
	Twin Turbo US (TT US)	—	✔	—
	ROMAX® Compact TT	—	—	✔
	ROMAX® Compact	—	—	✔
DEWALT	DCE200	✔	—	—
KLAUKE	UAP2/UNP2	✔	—	—
	UAP3L/UAP4L	✔	—	—
	UP2EL14	✔	—	—
	MAP2L19	—	—	✔
	MAP219	—	—	✔
MILWAUKEE	M12 Force Logic	—	✔	—
	M18 Force Logic	✔	—	—
HILTI	NPR 019	—	—	✔
NIBCO	PC-100	✔	—	—
	PC-280	✔	—	—
REMS	Power-Press	✔	—	—
	Akku-Press	✔	—	—
RIDGID	320-E	✔	—	—
	CT400	✔	—	—
	RP 241	—	✔	—
	RP 240	—	✔	—
	RP 210-B	—	✔	—
	RP 200-B	—	✔	—
	RP 330-B	✔	—	—
	RP 330-C	✔	—	—
	RP 340	✔	—	—
	RP 350	✔		
VIRAX	Viper® P25+	✔	—	—
	Viper® P25+	✔	—	—

ZoomLock MAX fittings can only be connected with jaws designed for use with ZoomLock MAX products as shown on page 8.

ZoomLock MAX

Press-to-Connect Refrigerant Fittings

PRESS TOOLS AND JAWS (Continued)

Jaws

	 **32 kN ROTHENBERGER Jaw Set**	 **24 kN ROTHENBERGER Jaw Set**	 **19 kN ROTHENBERGER Jaw Set**
JAW SETS / PART NUMBERS			
Jaw Sets *7 Piece* 1/4, 3/8, 1/2, 5/8, 3/4, 7/8, 1-1/8	MZK-32KN JAW KIT (7 PIECE) 871408	MZK-24KN JAW KIT (7 PIECE) 871409	MZK-19KN JAW KIT (7 PIECE) 871410
INDIVIDUAL JAWS / PART NUMBERS			
1/4”	MZK-32KN JAW-1/4” 871428	MZK-24KN JAW-1/4” 871419	MZK-19KN JAW-1/4” 871411
3/8”	MZK-32KN JAW-3/8” 871429	MZK-24KN JAW-3/8” 871420	MZK-19KN JAW-3/8” 871412
1/2”	MZK-32KN JAW-1/2” 871430	MZK-24KN JAW-1/2” 871421	MZK-19KN JAW-1/2” 871413
5/8”	MZK-32KN JAW-5/8” 871431	MZK-24KN JAW-5/8” 871422	MZK-19KN JAW-5/8” 871414
3/4”	MZK-32KN JAW-3/4” 871432	MZK-24KN JAW-3/4” 871423	MZK-19KN JAW-3/4” 871415
7/8”	MZK-32KN JAW-7/8” 871433	MZK-24KN JAW-7/8” 871424	MZK-19KN JAW-7/8” 871416
1-1/8”	MZK-32KN JAW-1 1/8” 871435	MZK-24KN JAW-1 1/8” 871426	MZK-19KN JAW-1 1/8 871418
1-3/8”*	MZK-32KN JAW-1 3/8” 871436	—	—

*Depth gauge (P/N 870517) is included with the 1-3/8" jaw.

WARNING: ZoomLock MAX fittings can only be connected with jaws/tools designed for use with ZoomLock MAX products.

FIG. 220 CLEVIS HANGER WITH WELDED SHIELD

MATERIAL: Carbon steel or 304/316 stainless steel.
FINISH: Black or electro galvanized.
SERVICE: For vapor sealed lines.
ORDERING: Specify pipe size, figure number, insulation thickness and finish.

PIPE SIZE	HANGER SIZING GUIDE					
	THICKNESS OF PIPE INSULATION					
	½"	1"	1½"	2"	2½"	3"
½	1½	2½	3½	5	6	7
¾	2	3	3½	5	6	7
1	2	3	4	5	6	7
1¼	2½	3½	4	5	6	7
1½	2½	3½	5	6	7	8
2	3	4	5	6	7	8
2½	3½	5	6	7	8	10
3	4	5	6	7	8	10
3½	5	6	7	8	10	10
4	5	6	7	8	10	10
5	6	7	8	10	10	12
6	7	8	10	10	12	12
8	10	10	12	12	14	16
10	12	12	14	16	16	18
12	14	16	16	18	18	20
14	16	16	18	18	20	20
16	18	18	20	20	24	24

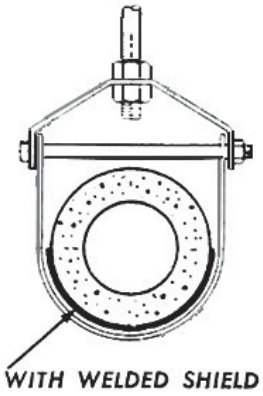

FIG. 225 CLEVIS HANGER WITH PROTECTION SADDLE

MATERIAL: Carbon steel or 304/316 stainless steel.
FINISH: Black or electro-galvanized.
SERVICE: For supporting insulated pipe lines.
ORDERING: Specify pipe size, figure number, insulation thickness and finish.

PIPE SIZE	HANGER SIZING GUIDE				
	THICKNESS OF PIPE INSULATION				
	1"	1½"	2"	2½"	3"
½	2½	3½	5	6	7
¾	3	3½	5	6	7
1	3	4	5	6	7
1¼	3½	4	5	6	7
1½	3½	5	6	7	8
2	4	5	6	7	8
2½	5	6	7	8	10
3	5	6	7	8	10
3½	6	7	8	10	10
4	6	7	8	10	10
5	7	8	10	10	12
6	8	10	10	12	12
8	10	12	12	14	16

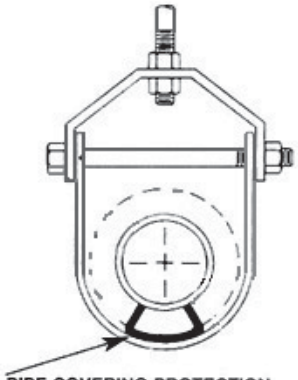

FIG. CT200 COPPER TUBING CLEVIS HANGER

MATERIAL: Carbon steel.
FINISH: Copper plated.
SERVICE: For the suspension of stationary copper tubing lines.
ORDERING: Specify tubing size and figure number.
APPROVALS: FS WW-H-171E TYPE 12.

TUBING SIZE	MATERIAL SIZE		A	B	C	E	F	WEIGHT EACH, LBS.
	UPPER	LOWER						
1/2	18ga. x 7/8	18ga. x 7/8	3/8	1 7/8	2 3/16	1 1/2	1/2	.12
3/4	18ga. x 7/8	18ga. x 7/8	3/8	1 3/4	2 1/8	1 3/8	1/2	.12
1	18ga. x 7/8	18ga. x 7/8	3/8	1 13/16	2 5/16	1 7/16	1/2	.14
1 1/4	18ga. x 7/8	18ga. x 7/8	3/8	2 1/8	2 3/4	1 11/16	3/4	.17
1 1/2	18ga. x 7/8	18ga. x 7/8	3/8	2 1/2	3 1/4	2 1/8	15/16	.20
2	14ga. x 7/8	16ga. x 7/8	3/8	2 15/16	4	2 9/16	1 1/16	.38
2 1/2	12ga. x 1 3/16	14ga. x 1 3/16	1/2	4 7/8	5 3/4	3 7/8	2 1/16	.71
3	12ga. x 1 3/16	14ga. x 1 3/16	1/2	4 1/2	6 1/8	3 15/16	2	.76
3 1/2	12ga. x 1 3/16	14ga. x 1 3/16	1/2	5 9/16	7 7/8	5	2 5/8	.82
4	11ga. x 1 3/16	14ga. x 1 3/16	1/2	5 7/8	7 7/8	5 1/4	2 9/16	1.02
5	8ga. x 1 1/4	8ga. x 1 1/4	5/8	5 7/8	8 3/4	5 3/8	1 5/8	1.68
6	8ga. x 1 1/4	8ga. x 1 1/4	5/8	6 1/16	9	5 3/8	1 1/2	1.84

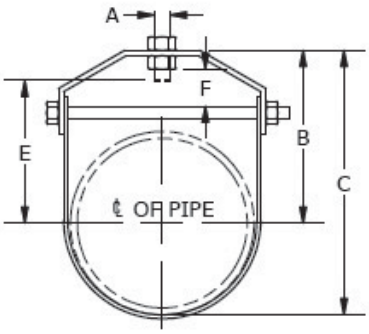

FIG. CT420 COPPER TUBING RISER CLAMP

MATERIAL: Carbon steel.
FINISH: Copper plated.
SERVICE: For support of tubing risers.
ORDERING: Specify tubing size and figure number.
APPROVALS: MSS SP-58 & SP-69 TYPE 8
FS WW-H-171E TYPE 8

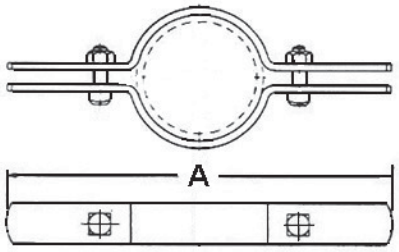

NOMINAL TUBING SIZE	A	MATERIAL SIZE	REC. LOAD LBS.	WEIGHT EACH, LBS.
1/2	6 3/4	1/8 x 1	225	.69
3/4	7 1/16	1/8 x 1	225	.73
1	9 1/4	1/8 x 1	250	.75
1 1/4	9 5/8	1/8 x 1	250	.77
1 1/2	10 1/8	1/8 x 1	500	.80
2	10 3/4	1/8 x 1 1/4	500	1.05
2 1/2	11 1/4	3/16 x 1 1/4	500	1.68
3	11 1/2	3/16 x 1 1/4	500	1.78
3 1/2	12 1/4	3/16 x 1 1/4	500	1.91
4	12 3/4	3/16 x 1 1/4	500	2.05
5	14	1/4 x 1 1/2	815	3.46
6	15 1/2	1/4 x 1 1/2	815	3.86

FIG. CT100

COPPER TUBING SPLIT RING HANGER

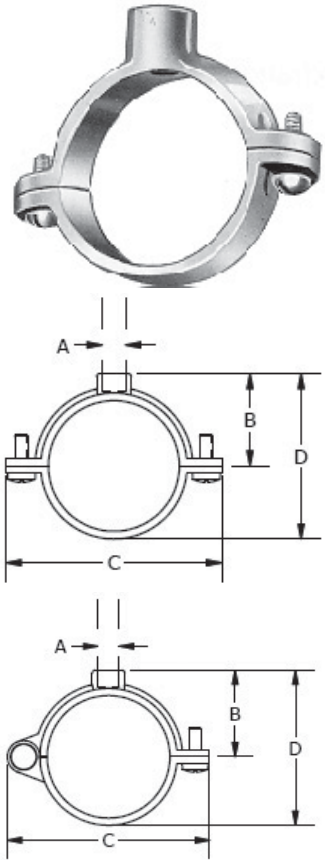

MATERIAL: Malleable iron.
FINISH: Copper epoxy coated (COPPER-GARD).
ORDERING: Specify tubing size and figure number.
SERVICE: For suspension of non-insulated stationary tubing lines.
APPROVALS: MSS SP-58 & SP-69 TYPE 12
FS WW-H-171E TYPE 25

TUBE SIZE	MAX. REC. LOAD, LBS.	A ROD SIZE	B	C	D	WEIGHT PER 100, LBS.
1/4*	180	3/8	9/16	1 3/4	7/8	7.3
3/8*	180	3/8	5/8	1 3/4	1 1/16	8.0
1/2	180	3/8	11/16	1 7/8	1 1/8	8.7
3/4	180	3/8	13/16	2 1/4	1 3/8	9.6
1	180	3/8	15/16	2 1/2	1 5/8	12.8
1 1/4	180	3/8	1 1/16	2 7/8	1 7/8	14.1
1 1/2	180	3/8	1 3/16	3	2 3/16	17.9
2	180	3/8	1 7/16	3 1/2	2 11/16	22.9
2 1/2*	300	1/2	1 7/8	4 15/16	2 7/16	44.9
3*	300	1/2	2 1/8	5 1/2	4 1/16	66.3
4*	300	1/2	2 5/8	6 5/8	5 1/16	75.3

*Sizes 1/4", 3/8", 2 1/2", 3" and 4" are hinged style

FIG. CT105

COPPER HANGER FLANGE

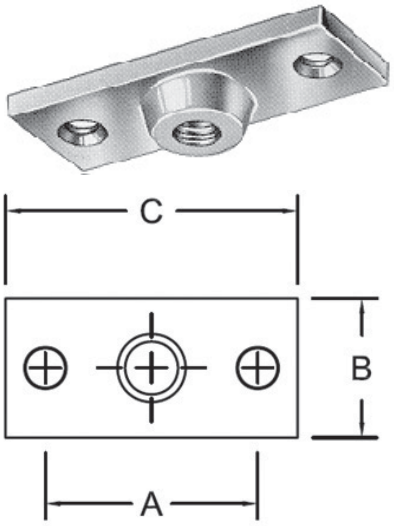

MATERIAL: Malleable iron.
FINISH: Copper epoxy coated (COPPER-GARD)
SERVICE: For suspension of non-insulated stationary tubing lines.
ORDERING: Specify tap size and figure number.

ROD SIZE	A	B	C	WEIGHT PER 100, LBS.
3/8	1 15/16	1 5/16	2 3/4	17
1/2	1 15/16	1 5/16	2 3/4	17

FIG. H132

STRUT

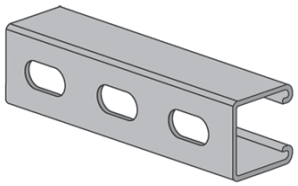

MATERIAL: Carbon steel or 304/316 stainless steel.
FINISH: Pre-galvanized (ASTM-A653) or epoxy coated green.
ORDERING: Specify size, figure number, length and finish.

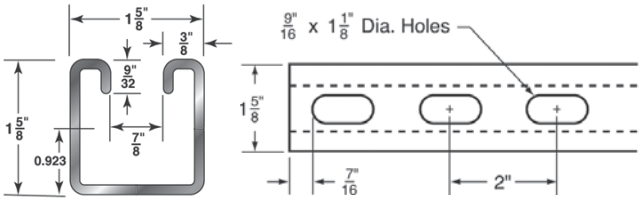

1⅝" X 1⅝" X 1⅝" X 12 GA.
⁹⁄₁₆" X 1¹⁄₈" Slot
2" On centers
189 Lbs. per 100 feet

FIG. SN

STRUT NUT

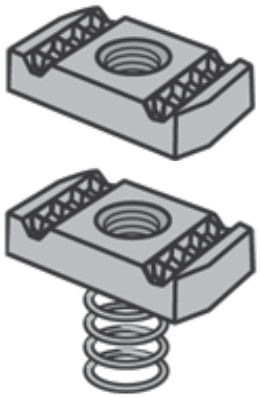

MATERIAL: Carbon steel or 316 stainless steel.
FINISH: Electro-galvanized.
ORDERING: Specify size with or without spring and figure number.

	WITHOUT SPRING		WITH SPRING	
ROD SIZE	STD. PKG.	WEIGHT EACH, LBS.	STD. PKG.	WEIGHT EACH, LBS.
¼	100	.067	100	.076
⅜	100	.094	100	.102
½	100	.09	100	.094
⅝	100	.13	50	.15
¾	100	.13	50	.15

FIG. SPC

STRUT PIPE CLAMP

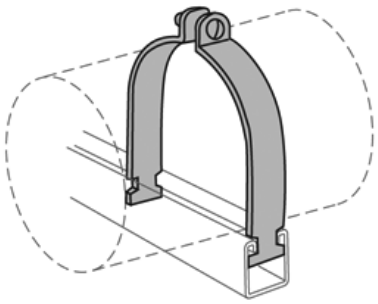

MATERIAL: Carbon steel or 304 stainless steel.
FINISH: Electro-galvanized.
ORDERING: Specify pipe/tube size and figure number.

	STRUT PIPE CLAMP		STRUT TUBE CLAMP	
PIPE/TUBE SIZE	STD. PKG.	WEIGHT EACH, LBS.	STD. PKG.	WEIGHT EACH, LBS.
⅜	100	.106	100	.084
½	100	.108	100	.091
¾	100	.138	100	.102
1	100	.156	100	.15
1¼	100	.191	100	.17
1½	50	.286	100	.182
2	50	.336	50	.316
2½	50	.372	50	.346
3	50	.446	50	.386
3½	25	.576	50	.54
4	25	.628	25	.606
5	25	.732	25	.69
6	25	.976	25	.91
8	25	1.24		

NOTE: Tubing sizes only available up to 4".

FIG. 635 JUNIOR TOP BEAM CLAMP

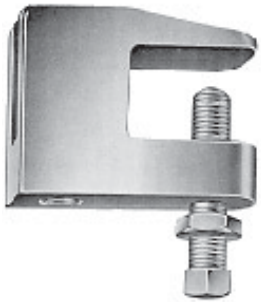

MATERIAL: Malleable Iron.
FINISH: Black or electro-galvanized.
SERVICE: For use under roof installations with bar joist type construction where the thickness of the joist does not exceed ⅝".
ORDERING: Specify size, figure number, and finish.
APPROVALS: MSS SP-58 & SP-69 TYPE 19
FM (⅜" & ½" rod)
UL

ROD SIZE A	SIZE PIPE	MAX RECOMMENDED LOAD, LBS.	WEIGHT PER 100, LBS.	B	C	D	E	F
⅜	½ to 2	350	30	1½	1 7/16	¾	1 3/16	¾
½	2½ to 3½	470	39	1⅝	1½	¾	1¼	⅞
⅝	4 to 5	550	40	1¾	1½	¾	1 3/32	1
¾	6	700	67	2¼	1¾	1 1/16	1 5/16	1¼
⅞	8	1000	66	2¼	1¾	1 1/16	1 5/16	1¼

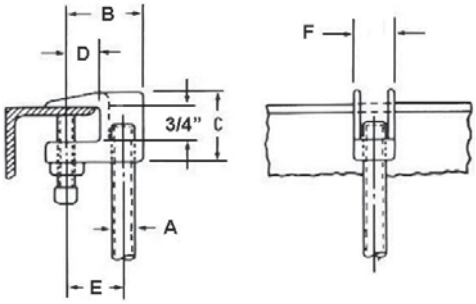

FIG. 640 TOP BEAM CLAMP

MATERIAL: Malleable Iron.
FINISH: Black or electro-galvanized.
SERVICE: For use under roof installations with bar joist type construction where the thickness of the joist does not exceed 1¼".
ORDERING: Specify size, figure number and finish.

ROD SIZE A	SIZE PIPE	MAX RECOMMENDED LOAD, LBS.	WEIGHT PER 100, LBS.	B	C	D	E	F
⅜	½ to 2	400	38	1 7/16	2	¾	1 3/16	¾
½	2½ to 3½	500	49	1⅝	2 1/16	¾	1¼	⅞
⅝	4 to 5	850	66	1¾	2¼	¾	1¼	1
¾	6	900	83	1⅞	2⅜	¾	1⅜	1 3/16

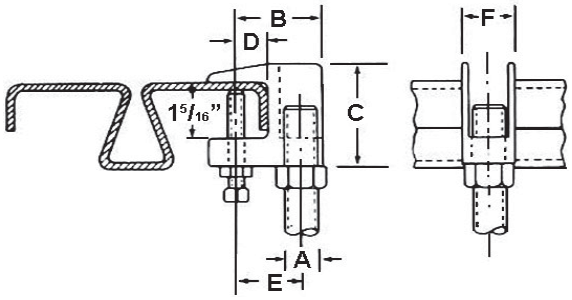

Double *Shield Expansion Anchor*

PRODUCT DESCRIPTION

The Double is a dual expansion machine bolt anchor particularly suited for materials of questionable strength. It can be used in solid concrete, block, brick, and stone. Job site tests are recommended when used in base materials of questionable strength.

FEATURES AND BENEFITS

- Performs in base material of questionable strength
- Internally threaded anchor for easy removability and service work
- Corrosion resistant body

APPROVALS AND LISTINGS

Federal GSA Specification – Meets the descriptive and proof load requirements of CID A-A 1923A, Type 3

GUIDE SPECIFICATIONS

CSI Divisions: *03151-Concrete Anchoring, 04081-Masonry Anchorage* and *05090-Metal Fastenings.* Expansion anchors shall be Double as supplied by Powers Fasteners, Inc., Brewster, NY.

SECTION CONTENTS Page No.

Double

THREAD VERSION

UNC Thread

ANCHOR MATERIALS

Zamac Alloy

ROD/ANCHOR SIZE RANGE (TYP.)

1/4" to 3/4" diameter

SUITABLE BASE MATERIALS

Normal-weight Concrete
Hollow Concrete Masonry (CMU)
Brick Masonry

INSTALLATION AND MATERIAL SPECIFICATIONS

Installation Specifications

Dimension	Rod/Anchor Diameter, *d*					
	1/4"	5/16"	3/8"	1/2"	5/8"	3/4"
ANSI Drill Bit Size, d_{bit} (in.)	1/2	5/8	3/4	7/8	1	1 1/4
Max. Tightening Torque, T_{max} (ft.-lbs.)	5	7	10	20	30	60
Sleeve Length (in.)	1	1 3/16	1 9/16	2	2 1/4	3 1/4
Thread Size (UNC)	1/4-20	5/16-18	3/8-16	1/2-13	5/8-11	3/4-10
Thread Length In Cone (in.)	1/2	1/2	5/8	3/4	7/8	1 1/8
Overall Anchor Length (in.)	1 3/8	1 5/8	2	2 1/2	2 3/4	3 15/16

Material Specifications

Anchor Component	Component Material
Anchor Shield	Zamac Alloy
Cone	Zamac Alloy

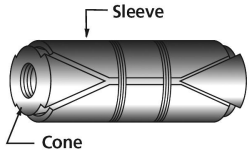

Installation Guidelines

Drill a hole into the base material to the minimum depth required. The tolerances of the drill bit used should meet the requirements of ANSI Standard B212.15. Do not expand the anchor prior to installation. Do not over drill the hole unless the application calls for a subset anchor.

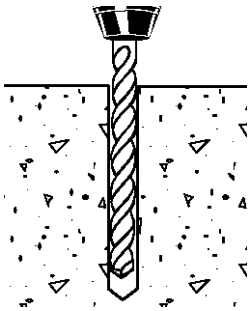

Insert anchor into the hole, threaded cone end first until the outer sleeve is flush with the surface of the base material.

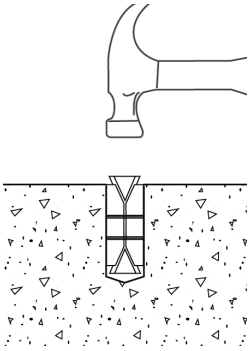

Position fixture, then insert screw or bolt and tighten. For maximum expansion, the upper cone should protrude slightly before setting. The bolt must engage a minimum of 2/3 of the anchor threads.

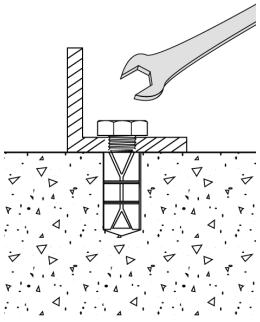

d

PERFORMANCE DATA

Ultimate Load Capacities for Double Expansion Anchor in Normal-Weight Concrete[1,2]

Rod/Anchor Diameter	Minimum Embedment Depth	Minimum Concrete Compressive Strength (f'_c)					
		2,000 psi (13.8 MPa)		**4,000 psi** (27.6 MPa)		**6,000 psi** (41.4 MPa)	
d in. (mm)	h_v in. (mm)	Tension lbs. (kN)	Shear lbs. (kN)	Tension lbs. (kN)	Shear lbs. (kN)	Tension lbs. (kN)	Shear lbs. (kN)
1/4 (6.4)	1 1/4 (31.8)	710 (3.2)	1,110 (5.0)	900 (4.0)	1,135 (5.2)	1,220 (5.5)	1,335 (6.0)
5/16 (7.9)	1 1/2 (38.1)	1,130 (5.1)	1,735 (7.8)	1,500 (6.7)	2,020 (9.1)	2,160 (9.7)	2,155 (9.7)
3/8 (9.5)	1 3/4 (44.5)	1,365 (6.1)	2,690 (12.1)	2,000 (9.0)	3,000 (13.5)	3,085 (13.9)	4,030 (18.1)
1/2 (12.7)	2 1/4 (57.2)	2,590 (11.7)	3,740 (16.8)	3,550 (16.0)	4,310 (19.4)	4,645 (20.9)	6,930 (31.2)
5/8 (15.9)	2 1/2 (63.5)	4,290 (19.3)	9,640 (43.4)	6,150 (27.7)	10,270 (46.2)	6,890 (81.0)	11,580 (52.2)
3/4 (19.1)	3 1/2 (88.9)	6,000 (27.0)	10,920 (49.2)	8,150 (36.7)	13,330 (60.0)	11,510 (51.8)	14,480 (65.2)

1. Tabulated load values are for anchors installed in concrete. Concrete compressive strength must be at the specified minimum at the time of installation.
2. Ultimate load capacities must be reduced by a minimum safety factor of 4.0 or greater to determine allowable working load. Consideration of safety factors of 20 or higher may be necessary depending upon the application such as life safety, overhead and in sustained tensile loading applications.

Allowable Load Capacities for Double Expansion Anchor in Normal-Weight Concrete[1,2,3]

Rod/Anchor Diameter	Minimum Embedment Depth	Minimum Concrete Compressive Strength (f'_c)					
		2,000 psi (13.8 MPa)		**4,000 psi** (27.6 MPa)		**6,000 psi** (41.4 MPa)	
d in. (mm)	h_v in. (mm)	Tension lbs. (kN)	Shear lbs. (kN)	Tension lbs. (kN)	Shear lbs. (kN)	Tension lbs. (kN)	Shear lbs. (kN)
1/4 (6.4)	1 1/4 (31.8)	180 (0.8)	280 (1.3)	225 (1.0)	285 (1.3)	305 (1.4)	335 (1.5)
5/16 (7.9)	1 1/2 (38.1)	285 (1.3)	435 (20)	375 (1.7)	505 (2.3)	540 (2.4)	540 (2.4)
3/8 (9.5)	1 3/4 (44.5)	340 (1.5)	675 (3.0)	500 (2.3)	750 (3.4)	770 (3.5)	1,010 (4.5)
1/2 (12.7)	2 1/4 (57.2)	650 (2.9)	935 (4.2)	890 (4.0)	1,080 (4.9)	1,160 (5.2)	1,735 (7.8)
5/8 (15.9)	2 1/2 (63.5)	1,075 (4.8)	2,410 (10.9)	1,540 (6.9)	2,570 (11.6)	1,725 (20.3)	2,895 (13.1)
3/4 (19.1)	3 1/2 (88.9)	1,500 (6.8)	2,730 (12.3)	2,040 (9.2)	3,335 (15.0)	2,880 (13.0)	3,620 (16.3)

1. Allowable load capacities listed are calculated using and applied safety factor of 4.0. Consideration of safety factors of 20 or higher may be necessary depending upon the application such as life safety, overhead and in sustained tensile loading applications.
2. Linear interpolation may be used to determine allowable loads for intermediate compressive strengths.
3. Allowable load capacities are multiplied by reduction factors found in the Design Criteria section when anchor spacing or edge distances are less than critical distances.

PERFORMANCE DATA

Ultimate and Allowable Load Capacities for Double Expansion Anchor in Hollow Concrete Masonry[1,2,3]

Rod/Anchor Diameter	Minimum Embedment Depth	$f'_m \geq$ 1,500 psi (10.4 MPa)			
		Ultimate Load		Allowable Load	
d in. (mm)	h_v in. (mm)	Tension lbs. (kN)	Shear lbs. (kN)	Tension lbs. (kN)	Shear lbs. (kN)
1/4 (6.4)	1 1/4 (31.8)	885 (4.0)	1,350 (6.1)	175 (0.8)	270 (1.2)
5/16 (7.9)	1 1/2 (38.1)	1,295 (5.8)	1,635 (7.4)	260 (1.2)	325 (1.5)
3/8 (9.5)	1 1/2 (38.1)	1,575 (7.1)	2,160 (9.7)	315 (1.4)	430 (1.9)
1/2 (12.7)	1 1/2 (38.1)	2,710 (12.2)	3,130 (14.1)	540 (2.4)	625 (2.8)

1. Tabulated load values are for anchors installed in minimum 8-inch wide, minimum Grade N, Type II, lightweight, medium-weight or normal-weight concrete masonry units conforming to ASTM C 90. Mortar must be minimum Type N. Masonry cells may be grouted. Masonry compressive strength must be at the specified minimum at the time of installation ($f'_m \geq$ 1,500 psi).
2. Allowable load capacities listed are calculated using and applied safety factor of 5.0. Consideration of safety factors of 20 or higher may be necessary depending upon the application such as life safety, and in sustained tensile loading applications.
3. Anchors with diameters of 3/8" and 1/2" installed in hollow concrete masonry units are limited to one anchor per unit cell.

Ultimate and Allowable Load Capacities for Double Shell Expansion Anchor in Clay Brick Masonry[1,2]

Rod/Anchor Diameter	Minimum Embedment Depth	Structural Brick Masonry $f'_m \geq$ 1,500 psi (10.4 MPa)			
		Ultimate Load		Allowable Load	
d in. (mm)	h_v in. (mm)	Tension lbs. (kN)	Shear lbs. (kN)	Tension lbs. (kN)	Shear lbs. (kN)
1/4 (6.4)	1 1/4 (31.8)	1,175 (5.3)	1,585 (7.1)	235 (1.1)	315 (1.4)
5/16 (7.9)	1 1/2 (38.1)	1,585 (7.1)	2,040 (9.2)	315 (1.4)	410 (1.8)
3/8 (9.5)	1 3/4 (44.5)	1,830 (8.2)	3,590 (16.2)	365 (1.6)	720 (3.2)
1/2 (12.7)	2 1/4 (57.2)	3,420 (15.4)	5,185 (23.3)	685 (3.1)	1,035 (4.7)
5/8 (15.9)	2 1/2 (63.5)	4,460 (19.8)	6,055 (27.2)	890 (4.0)	1,210 (5.4)
3/4 (19.1)	3 1/2 (88.9)	6,000 (26.7)	7,935 (35.7)	1,200 (5.3)	1,585 (7.1)

1. Tabulated load values are for anchors installed in multiple wythe, minimum Grade SW, solid clay brick masonry walls conforming to ASTM C 62. Mortar must be minimum Type N. Masonry compressive strength must be at the specified minimum at the time of installation ($f'_m \geq$ 1,500 psi).
2. Allowable load capacities listed are calculated using and applied safety factor of 5.0. Consideration of safety factors of 20 or higher may be necessary depending upon the application such as life safety, and in sustained tensile loading applications.

DESIGN CRITERIA (ALLOWABLE STRESS DESIGN)

Combined Loading

For anchors loaded in both shear and tension, the combination of loads should be proportioned as follows:

$$\left(\frac{N_u}{N_n}\right) + \left(\frac{V_u}{V_n}\right) \leq 1$$

Where: N_u = Applied Service Tension Load
N_n = Allowable Tension Load
V_u = Applied Service Shear Load
V_n = Allowable Shear Load

Load Adjustment Factors for Spacing and Edge Distances[1]

Anchor Installed in Normal-Weight Concrete					
Anchor Dimension	Load Type	Critical Distance (Full Anchor Capacity)	Critical Load Factor	Minimum Distance (Reduced Capacity)	Minimum Load Factor
Spacing (s)	Tension and Shear	$s_{cr} = 10d$	$F_{Ns} = F_{vs} = 1.0$	$s_{min} = 5d$	$F_{Ns} = F_{Vc} = 0.50$
Edge Distance (c)	Tension	$c_{cr} = 12d$	$F_{Nc} = 1.0$	$c_{min} = 5d$	$F_{Nc} = 0.80$
	Shear	$c_{cr} = 12d$	$F_{vc} = 1.0$	$c_{min} = 5d$	$F_{Vc} = 0.50$

1. Allowable load values found in the performance data tables are multiplied by reduction factors when anchor spacing or edge distances are less than critical distances. Linear interpolation is allowed for intermediate anchor spacing and edge distances between critical and minimum distances.When an anchor is affected by both reduced spacing and edge distance, the spacing and edge reduction factors must be combined (multiplied). Multiple reduction factors for anchor spacing and edge distance may be required depending on the anchor group configuration.

d

DESIGN CRITERIA (ALLOWABLE STRESS DESIGN)

Load Adjustment Factors for Normal-Weight Concrete

Spacing, Tension (F_{N_S}) & Shear (F_{V_S})							
Dia. (in.)		1/4	5/16	3/8	1/2	5/8	3/4
s_{cr} (in.)		2 1/2	3 1/8	3 3/4	5	6 1/4	7 1/2
s_{min} (in.)		1 1/4	1 9/16	1 7/8	2 1/2	3 1/8	3 3/4
Spacing, s (inches)	1 1/4	0.50					
	1 9/16	0.63	0.50				
	1 7/8	0.75	0.60	0.50			
	2 1/2	1.00	0.80	0.67	0.50		
	3 1/8		1.00	0.83	0.63	0.50	
	3 3/4			1.00	0.75	0.60	0.50
	5				1.00	0.80	0.67
	6 1/4					1.00	0.83
	7 1/2						1.00

Notes: For anchors loaded in tension and shear, the critical spacing (s_{cr}) is equal to 10 anchor diameters (10d) at which the anchor achieves 100% of load.

Minimum spacing (s_{min}) is equal to 5 anchor diameters (5d) at which the anchor achieves 50% of load.

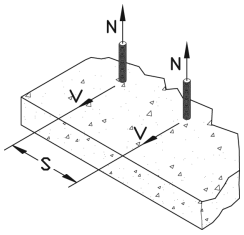

Edge Distance, Tension (F_{N_C})							
Dia. (in.)		1/4	5/16	3/8	1/2	5/8	3/4
c_{cr} (in.)		3	3 3/4	4 1/2	6	7 1/2	9
c_{min} (in.)		2	2 1/2	3	4	5	6
Edge Distance, c (inches)	2	0.80					
	2 1/2	0.90	0.80				
	3	1.00	0.88	0.80			
	3 3/4		1.00	0.90			
	4			0.93	0.80		
	4 1/2			1.00	0.85		
	5				0.90	0.80	
	6				1.00	0.88	0.80
	7 1/2					1.00	0.90
	9						1.00

Notes: For anchors loaded in tension, the critical edge distance (c_{cr}) is equal to 12 anchor diameters (12d) at which the anchor achieves 100% of load.

Minimum edge distance (c_{min}) is equal to 8 anchor diameters (8d) at which the anchor achieves 80% of load.

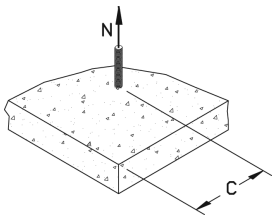

Edge Distance, Shear (F_{V_C})							
Dia. (in.)		1/4	5/16	3/8	1/2	5/8	3/4
c_{cr} (in.)		3	3 3/4	4 1/2	6	7 1/2	9
c_{min} (in.)		2	2 1/2	3	4	5	6
Edge Distance, c (inches)	2	0.50					
	2 1/2	0.75	0.50				
	3	1.00	0.70	0.50			
	3 3/4		1.00	0.75			
	4			0.83	0.50		
	4 1/2			1.00	0.63		
	5				0.75	0.50	
	6				1.00	0.70	0.50
	7 1/2					1.00	0.75
	9						1.00

Notes: For anchors loaded in shear, the critical edge distance (c_{cr}) is equal to 12 anchor diameters (12d) at which the anchor achieves 100% of load.

Minimum edge distance (c_{min}) is equal to 8 anchor diameters (8d) at which the anchor achieves 50% of load.

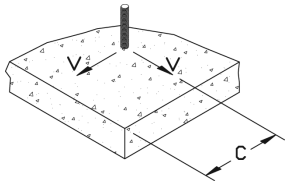

ORDERING INFORMATION

Double Expansion Anchor

Catalog Number	Rod/Anchor Diameter	Drill Diameter	Overall Length	Minimum Hole Depth	Standard Box	Standard Carton	Wt./ 100
9510	1/4"	1/2"	1 3/8"	1 1/4"	50	500	4
9515	5/16"	5/8"	1 5/8"	1 1/2"	50	500	7 1/2
9520	3/8"	3/4"	2"	1 3/4"	50	250	12 1/2
9525	1/2"	7/8"	2 1/2"	2 1/4"	25	250	18
9530	5/8"	1"	2 3/4"	2 1/2"	25	100	25 1/2
9535	3/4"	1 1/4"	3 15/16"	3 1/2"	10	50	54 1/2

Multi-Set II®

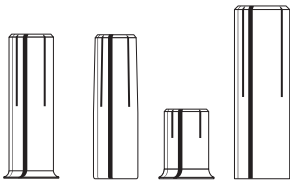

SPECIFIED FOR ANCHORAGE INTO CONCRETE

Drop-In, shell-type anchors feature an internally threaded, all-steel shell with expansion cone insert and flush embedment lip. "Anchors are manufactured from zinc-plated carbon steel, 18-8 stainless steel and 316 stainless steel.

Anchors should be installed with carbide tipped hammer drill bits made in accordance to ANSI B212.15-1994 specifications.

Anchors should be tested to ASTM E488 criteria and listed by ICC (formerly ICBO). Anchors should also be listed by the following agencies as required by the local building code: UL, FM, City of Los Angeles, California State Fire Marshal and Cal Trans.

APPROVALS/LISTINGS

Meets or exceeds U.S. Government G.S.A. Specification A-A-55614 Type 1 (Formerly GSA: FF-S-325 Group VIII)

Underwriters Laboratories

Factory Mutual

City of Los Angeles – #RR2748

California State Fire Marshal

Caltrans

INSTALLATION STEPS

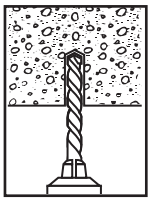

To set anchor flush with surface:

1. Drill hole to required embedment (see Table on page 73).

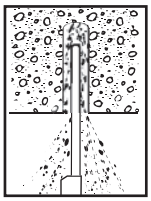

2. Clean hole with pressurized air.

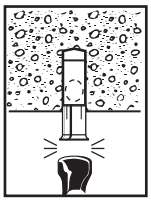

3. Drive anchor flush with surface of concrete.

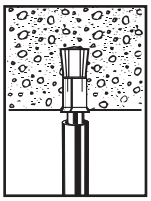

4. Expand anchor with setting tool provided (see chart). Anchor is properly expanded when shoulder of setting tool is flush with top of anchor.

To set anchor below surface:

Drill hole deeper than anchor length. Thread bolt into anchor. Hammer anchor into hole until bolt head is at desired depth. Remove bolt and set anchor with setting tool.

Multi-Set II Drop-In Anchors — Ultimate Tension and Shear Values (Lbs/kN) in Concrete*

BOLT DIA. In. (mm)	ANCHOR DIA. In. (mm)	MIN. EMBEDMENT DEPTH In. (mm)	ANCHOR TYPE	TENSION Lbs. (kN) f'c = 2000 PSI (13.8 MPa)	TENSION Lbs. (kN) f'c = 4000 PSI (27.6 MPa)	TENSION Lbs. (kN) f'c = 6000 PSI (41.4 MPa)	SHEAR Lbs. (kN) f'c > 2000 PSI (13.8 MPa)
1/4 (6.4)	3/8 (9.5)	1 (25.4)	RM, RL or CL-Carbon or SRM-18-8 S.S. or SSRM-316 S.S.	1,680 (7.5)	2,360 (10.5)	2,980 (13.3)	1,080 (4.8)
3/8 (9.5)	1/2 (12.7)	1-5/8 (41.3)		2,980 (13.3)	3,800 (16.9)	6,240 (27.8)	3,160 (14.1)
1/2 (12.7)	5/8 (15.9)	2 (50.8)		3,300 (14.7)	5,840 (26.0)	8,300 (36.9)	4,580 (20.4)
5/8 (15.9)	7/8 (22.2)	2-1/2 (63.5)		5,500 (24.5)	8,640 (38.4)	11,020 (49.0)	7,440 (33.1)
3/4 (19.1)	1 (25.4)	3-3/16 (81.0)		8,280 (36.8)	9,480 (42.2)	12,260 (54.5)	10,480 (46.6)

* Allowable values are based upon a 4 to 1 safety factor. Divide by 4 for allowable load values.

* For continuous extreme low temperature applications, use stainless steel.

Combined Tension and Shear Loading—for Multi-Set Anchors

Allowable loads for anchors subjected to combined shear and tension forces are determined by the following equation:

$$(Ps/Pt)^{5/3} + (Vs/Vt)^{5/3} \leq 1$$

Ps = Applied tension load **Vs = Applied shear load** **Pt = Allowable tension load** **Vt = Allowable shear load**

Multi-Set II Drop-In Anchors — Ultimate Tension and Shear Values (Lbs/kN) in Lightweight Concrete*

BOLT DIA. In. (mm)	ANCHOR DIA. In. (mm)	MINIMUM EMBEDMENT DEPTH In. (mm)	ANCHOR TYPE	LIGHTWEIGHT CONCRETE f'c = 3000 PSI (20.7 MPa)		LOWER FLUTE OF STEEL DECK WITH LIGHTWEIGHT CONCRETE FILL f'c = 3000 PSI (20.7 MPa)	
				TENSION Lbs. (kN)	SHEAR Lbs. (kN)	TENSION Lbs. (kN)	SHEAR Lbs. (kN)
3/8 (9.5)	1/2 (12.7)	1-5/8 (39.7)	RM, RL or CL-Carbon or SRM-18-8 S.S. or SSRM-316 S.S.	2,035 (9.1)	1,895 (8.4)	3,340 (14.9)	4,420 (19.6)
1/2 (12.7)	5/8 (15.9)	2 (50.8)		2,740 (12.2)	2,750 (12.2)	3,200 (14.2)	4,940 (22.0)
5/8 (15.9)	7/8 (22.2)	2-1/2 (63.5)		4,240 (18.9)	4,465 (19.9)	5,960 (26.5)	5,840 (26.0)
3/4 (19.1)	1 (25.4)	3-3/16 (81.0)		5,330 (23.7)	6,290 (28.0)	8,180 (36.4)	9,120 (40.6)

* Allowable values are based upon a 4 to 1 safety factor. Divide by 4 for allowable load values.

Multi-Set II Drop-In Anchors — Recommended Edge and Spacing Distance Requirements*

BOLT DIA. In. (mm)	DRILL BIT SIZE In. (mm)	EMBEDMENT DEPTH In. (mm)	ANCHOR TYPE	EDGE DISTANCE REQUIRED TO OBTAIN MAX. WORKING LOAD In. (mm)	MIN. EDGE DISTANCE AT WHICH LOAD FACTOR APPLIED =.80 FOR TENSION =.70 FOR SHEAR In. (mm)	SPACING REQUIRED TO OBTAIN MAX. WORKING LOAD In. (mm)	MIN. ALLOWABLE SPACING BETWEEN ANCHORS LOAD FACTOR APPLIED =.80 FOR TENSION =.55 FOR SHEAR In. (mm)
1/4 (6.4)	3/8 (9.5)	1 (25.4)	RM, RL or CL-Carbon or SRM-18-8 S.S. or SSRM-316 S.S.	1-3/4 (44.5)	7/8 (22.2)	3-1/2 (88.9)	1-3/4 (44.5)
3/8 (9.5)	1/2 (12.7)	1-5/8 (41.3)		2-7/8 (73.0)	1-7/16 (36.5)	5-11/16 (144.5)	2-7/8 (73.0)
1/2 (12.7)	5/8 (15.9)	2 (50.8)		3-1/2 (88.9)	1-3/4 (44.5)	7 (177.8)	3-1/2 (88.9)
5/8 (15.9)	7/8 (22.2)	2-1/2 (63.5)		4-3/8 (111.1)	2-3/16 (55.6)	8-3/4 (222.3)	4-3/8 (111.1)
3/4 (19.1)	1 (25.4)	3-3/16 (81.0)		5-5/8 (142.9)	2-13/16 (71.4)	11-3/16 (284.2)	5-5/8 (142.9)

* Spacing and edge distances shall be divided by 0.75 when anchors are placed in structural lightweight concrete. Linear interpolation may be used for intermediate spacing and edge distances.

Multi-Set II Drop-In Anchors — Ultimate Tension and Shear Values (Lbs/kN) for RX-series (3/4" and 1" Embedment)*

BOLT DIA. In. (mm)	DRILL BIT SIZE In. (mm)	EMBEDMENT In. (mm)	2500 PSI (17.2 MPa) CONCRETE		4000 PSI (27.6 MPa) CONCRETE		HOLLOW CORE	
			TENSION Lbs. (kN)	SHEAR Lbs. (kN)	TENSION Lbs. (kN)	SHEAR Lbs. (kN)	TENSION Lbs. (kN)	SHEAR Lbs. (kN)
3/8 (9.5)	1/2 (12.7)	3/4 (19.1)	1,571 (7.0)	2,295 (10.2)	1,987 (8.8)	2,903 (12.9)	1,908 (8.5)	2,401 (10.7)
1/2 (12.7)	5/8 (15.9)	1 (25.4)	2,113 (9.4)	2,585 (11.5)	2,673 (11.9)	3,270 (14.5)	2,462 (11.0)	2,401 (10.7)

* The tabulated values are for RX anchors installed at a minimum of 12 diameters on center and minimum edge distance of 6 diameters for 100 percent anchor efficiency. Spacing and edge distance may be reduced to 6 diameters spacing and 3 diameter edge distance provided the values are reduced 50 percent. Linear Interpolation may be used for intermediate spacings and edge margins.

* Allowable values are based upon a 4 to 1 safety factor. Divide by 4 for allowable load values.

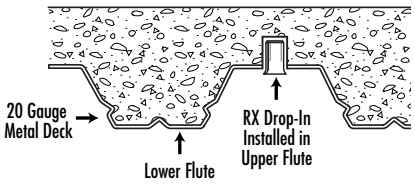

Multi-Set II Drop-In Anchors — Anchoring Overhead in 3000 PSI Lightweight Concrete On Metal Deck

ANCHOR	DRILL HOLE DIAMETER In. (mm)	EMBEDMENT In. (mm)	3000PSI (20.7 MPa) CONCRETE		
			ULTIMATE TENSION LOAD Lbs. (kN)		ALLOWABLE WORKING LOAD Lbs. (kN)
RX-38 Drop-In	1/2 (12.7)	3/4 (19.1)	Upper Flute	1,410 (6.3)	353 (1.6)
			Lower Flute	1,206 (5.4)	301 (1.3)

* Allowable values are based upon a 4 to 1 safety factor. Divide by 4 for allowable load values.

FIG. 780 HEX HEAD MACHINE BOLT

MATERIAL: Carbon steel or 304 or 316 stainless steel.
FINISH: Black, electro or hot-dipped galvanized.
SERVICE: For use as a fastening device.
ORDERING: Specify size, figure number and finish. Length of bolt is measured from under the head to the extreme point. Sizes as shown are carried in stock, other sizes are also available.

DIAMETER OF BOLT	WEIGHT PER HUNDRED, LBS.														
	LENGTH OF BOLT IN INCHES														
	1½	1¾	2	2¼	2½	2¾	3	3¼	3½	3¾	4	4½	5	5½	6
⅜	9	10	11	–	–	–	–	–	–	–	–	–	–	–	–
½	18	20	21	22	24	25	27	–	–	–	–	–	–	–	–
⅝	31	33	35	37	39	41	43	46	48	50	52	56	61	65	69
¾	49	52	55	58	61	64	67	70	73	76	80	86	92	98	105
⅞	–	–	–	–	89	93	98	102	106	110	115	123	131	140	148
1	–	–	–	–	–	128	134	139	145	150	156	167	178	189	200
1⅛	–	–	–	–	–	–	–	–	193	–	207	221	235	249	263
1¼	–	–	–	–	–	–	–	–	–	–	–	–	302	320	337

FIG. 785 STANDARD HEX NUTS

FIG. 790 HEAVY DUTY HEX NUTS

MATERIAL: Carbon steel or 304 or 316 stainless steel.
FINISH: Black, electro or hot-dipped galvanized.
ORDERING: Specify rod size, figure number and finish.

ROD SIZE	WEIGHT PER 100, LBS.	
	FIG. 785	FIG. 790
¼	0.74	1.2
⅜	1.60	3.2
½	3.75	6.6
⅝	7.33	12
¾	11.9	19
⅞	19.0	30
1	28.3	43
1⅛	40.3	59
1¼	54.3	79
1⅜	73.0	102
1½	94.3	131

FIG. 795

ROUND STEEL WASHERS

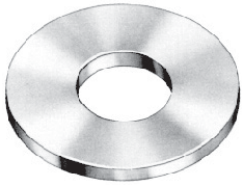

MATERIAL: Carbon steel or 304/316 stainless steel.
FINISH: Black, electro or hot-dipped galvanized.
ORDERING: Specify rod size, figure number and finish.

SIZE OF BOLT	OUTSIDE DIAMETER	DIAMETER OF HOLE	WEIGHT PER 100, LBS.
1/4	3/4	5/16	0.67
3/8	1	7/16	1.50
1/2	1 3/8	9/16	3.90
5/8	1 3/4	11/16	7.80
3/4	2	13/16	11.00
7/8	2 1/4	15/16	15.00
1	2 1/2	1 1/16	19.00
1 1/8	2 3/4	1 1/4	22.00
1 1/4	3	1 3/8	26.00
1 1/2	3 1/2	1 5/8	38.00

FIG. 800

LOCK WASHER

MATERIAL: Carbon steel or 304/316 stainless steel.
FINISH: Black or electro-galvanized.
ORDERING: Specify size, figure number and finish.

ROD SIZE	INSIDE DIAMETER	WIDTH OF STEEL	THICKNESS OF STEEL	WEIGHT PER 100, LBS.
3/8	7/16	.141	.094	7
1/2	9/16	.171	.125	15
5/8	11/16	.203	.156	26
3/4	13/16	.234	.188	43

FIG. 805

STEEL WASHER PLATE

MATERIAL: Carbon steel or 304/316 stainless steel.
FINISH: Black, electro or hot-dipped galvanized.
SERVICE: For use as a heavy duty washer to suspend hanger rods.
ORDERING: Specify rod tapping size, figure number and finish.

ROD SIZE	WEIGHT PER 100, LBS.	SIZE OF STOCK
3/8	62	3 x 3 x 1/4
1/2	62	3 x 3 x 1/4
5/8	92	3 x 3 x 3/8
3/4	164	4 x 4 x 3/8
7/8	220	4 x 4 x 1/2
1	220	4 x 4 x 1/2

FIG. 755 CONTINUOUS THREADED ROD

MATERIAL: Carbon steel or 304/316 stainless steel

FINISH: Black, electro or hot-dipped galvanized.

SERVICE: For use in applications for attaching hangers to structural attachments. Continuous threaded rod can be cut to required lengths. Sizes below are stocked in 6’, 10’ and 12’ lengths. SAE national fine thread can be furnished to order.

ORDERING: Specify rod diameter, figure number, length and finish.

ROD SIZE	WEIGHT PER 100, LBS.	MAX. REC. LOAD, LBS.
1/4	12	240
5/16	20	300
3/8	30	610
1/2	54	1130
5/8	85	1810
3/4	120	2710
7/8	170	3770
1	225	4960
1 1/8	280	6230
1 1/4	350	8000
1 3/8	450	9000
1 1/2	500	11630

FIG. 760 HANGER ROD

MATERIAL: Carbon steel or 304/316 stainless steel

FINISH: Black, electro or hot-dipped galvanized.

SERVICE: For use in applications for attaching hangers to structural attachments. Threaded on both ends and can be furnished in standard lengths of 8” - 240”

ORDERING: Specify rod diameter, figure number, length, thread length and finish.

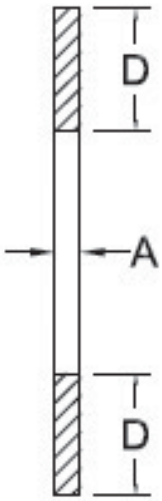

ROD SIZE A	STANDARD ROD THREAD LENGTH D, IN.	MAX. REC. LOAD, LBS. 650° F
1/4	2 1/2	240
3/8	2 1/2	610
1/2	2 1/2	1130
5/8	2 1/2	1810
3/4	3	2710
7/8	3 1/2	3770
1	4	4960

Tapcon® Concrete and MasonryAnchors

SPECIFIED FOR ANCHORAGE INTO CONCRETE, BRICK OR BLOCK

The "original masonry" anchor that cuts its own threads into concrete, brick, or block. Maximum performance is achieved because the Tapcon Anchor, the Condrive Installation Tool, and the carbide-tipped Tapcon Drill Bits are designed to work as a system. It is essential to use the Condrive tool and the correct drill bit to assure consistent anchor performance.

Now available in 410 stainless steel.

APPROVALS/LISTINGS

ICC Evaluation Service, Inc. – #ESR-1671
ICC Evaluation Service, Inc. – #ESR-2202
Miami-Dade County – #07-0315.03
Florida Building Code

THE ORIGINAL Tapcon®

Hex Head style on Tapcon Anchors is available for majority of fixture anchoring needs

Climaseal™ Coating is standard on all Tapcon anchors to provide extended corrosion resistance

Now available in 410 Stainless Steel

Phillips Flat Head style is available when flush seating is necessary in countersink applications

Advanced Threadform cuts into masonry materials for greater pullout values

Lengths of Tapcon Anchors range from 1-1/4" to 4" in 3/16" and up to 6" in 1/4" diameters.

Nail-Type Point guides the anchor into the pre-drilled hole. Excellent for wood to concrete applications

INSTALLATION STEPS

Read instructions before using (installation)!

WARNING: If there are any questions concerning proper installation, applications or appropriate use of this product, please call our Technical Services Department at 1-800-899-7890. Failure to follow these instructions can result in serious personal injury.

1. **Select proper fastener – diameter / head style / length**
   a) **Use selection chart to choose proper length.**
2. **Drill Hole – use selection chart to determine drill bit length and depth of hole**
   a) **Choose appropriate drill bit based upon diameter of Tapcon Anchor.**
   b) **Drill hole minimum ?" deeper than Tapcon Anchor to be embedded.**
   Minimum anchor embedment: 1"
   Maximum anchor embedment: 1-3/4"
3. **Drive Anchor**

WARNING: Failure to wear safety glasses with side shields can result in serious personal injury. Always wear ANSI compliant eye protection (ANSI Z87.1-2003).

WARNING: Using the wrong size drill bit will affect performance values and may cause failure.

Head Styles

3/16" diameter has a 1/4" slotted hex washer head (HWH)
1/4" diameter has a 5/16" slotted hex washer head (HWH)

3/16" diameter uses a #2 phillips flat head (PFH)
1/4" diameter uses a #3 phillips flat head (PFH)

PERFORMANCE TABLE

Tapcon Anchors — Ultimate Tension and Shear Values (Lbs/kN) in Concrete

ANCHOR DIA. In. (mm)	MIN. DEPTH OF EMBEDMENT In. (mm)	f'c = 2000 PSI (13.8 MPa)		f'c = 3000 PSI (20.7 MPa)		f'c = 4000 PSI (27.6 MPa)		f'c = 5000 PSI (34.5 MPa)	
		TENSION Lbs. (kN)	SHEAR Lbs. (kN)	TENSION Lbs. (kN)	SHEAR Lbs. (kN)	TENSION Lbs. (kN)	SHEAR Lbs. (kN)	TENSION Lbs. (kN)	SHEAR Lbs. (kN)
3/16 (4.8)	1 (25.4)	600 (2.7)	720 (3.2)	625 (2.8)	720 (3.2)	650 (2.9)	720 (3.2)	800 (3.6)	860 (3.8)
	1-1/4 (31.8)	845 (3.7)	720 (3.2)	858 (3.8)	720 (3.2)	870 (3.9)	720 (3.2)	1,010 (4.5)	860 (3.8)
	1-1/2 (38.1)	1,090 (4.8)	860 (3.8)	1,090 (4.8)	860 (3.8)	1,090 (4.8)	860 (3.8)	1,220 (5.4)	860 (3.8)
	1-3/4 (44.5)	1,450 (6.5)	870 (3.9)	1,455 (6.5)	870 (3.9)	1,460 (6.5)	990 (4.4)	1,730 (7.7)	990 (4.4)
1/4 (6.4)	1 (25.4)	750 (3.3)	900 (4.0)	775 (3.4)	900 (4.0)	800 (3.6)	1,360 (6.1)	950 (4.2)	1,440 (6.4)
	1-1/4 (31.8)	1,050 (4.7)	900 (4.0)	1,160 (5.2)	900 (4.0)	1,270 (5.6)	1,360 (6.1)	1,515 (6.7)	1,440 (6.4)
	1-1/2 (38.1)	1,380 (6.1)	1,200 (5.3)	1,600 (7.2)	1,200 (5.3)	1,820 (8.1)	1,380 (6.1)	2,170 (9.7)	1,670 (7.4)
	1-3/4 (44.5)	2,020 (9.0)	1,670 (7.4)	2,200 (9.8)	1,670 (7.4)	2,380 (10.6)	1,670 (7.4)	2,770 (12.3)	1,670 (7.4)

Safe working loads for single installation under static loading should not exceed 25% of the ultimate load capacity.

PERFORMANCE TABLE

Tapcon Anchors — Ultimate Tension and Shear Values (Lbs/kN) in Hollow Block

ANCHOR DIA. In. (mm)	ANCHOR EMBEDMENT In. (mm)	LIGHTWEIGHT BLOCK		MEDIUM WEIGHT BLOCK	
		TENSION Lbs. (kN)	SHEAR Lbs. (kN)	TENSION Lbs. (kN)	SHEAR Lbs. (kN)
3/16 (4.8)	1 (25.4)	220 (1.0)	400 (1.8)	340 (1.5)	730 (3.2)
1/4 (6.4)	1 (25.4)	250 (1.1)	620 (2.8)	500 (2.2)	1,000 (4.4)

Safe working loads for single installation under static loading should not exceed 25% of the ultimate load capacity.

NOTE: 3/16" Tapcon requires 5/32" bit, 1/4" Tapcon requires 3/16" bit.

PERFORMANCE TABLE

Tapcon® Anchors — Allowable Edge and Spacing Distances

PARAMETER	ANCHOR DIA. Inch	NORMAL WEIGHT CONCRETE			CONCRETE MASONRY UNITS (CMU)		
		FULL CAPACITY (Critical Distance Inches)	REDUCED CAPACITY (Minimal Distance Inches)	LOAD REDUCTION FACTOR	FULL CAPACITY (Critical Distance Inches)	REDUCED CAPACITY (Minimal Distance Inches)	LOAD REDUCTION FACTOR
Spacing Between Anchors - Tension	3/16	3	1-1/2	0.73	3	1-1/2	1.00
	1/4	4	2	0.66	4	2	0.84
Spacing Between Anchors - Shear	3/16	3	1-1/2	0.83	3	1-1/2	1.00
	1/4	4	2	0.82	4	2	0.81
Edge Distance - Tension	3/16	1-7/8	1	0.71	4	2	0.91
	1/4	2-1/2	1-1/4	0.78	4	2	0.88
Edge Distance - Shear	3/16	2-1/4	1-1/8	0.70	4	2	0.93
	1/4	3	1-1/2	0.59	4	2	0.80

For SI: 1 inch = 25.4 mm

Trubolt Wedge

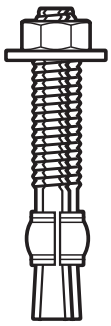

SPECIFIED FOR ANCHORAGE INTO CONCRETE

Trubolt Wedge anchors feature a stainless steel expansion clip, threaded stud body, nut and washer. Anchor bodies are made of plated carbon steel, hot-dipped galvanized carbon steel, type 304 stainless steel or type 316 stainless steel as identified in the drawings or other notations.

Trubolt+ Wedge anchors consist of a high-strength threaded stud body, expansion clip, nut and washer. Anchor bodies are made of plated carbon steel. The expansion clip consists of a split cylindrical ring with undercutting grooves.

The exposed end of the anchor is stamped to identify anchor length. Stampings should be preserved during installation for any subsequent embedment verification.

Use carbide tipped hammer drill bits made in accordance with ANSI B212.15-1994 to install anchors.

Anchors are tested to ACI 355.2 and ICC-ES AC193. Anchors are listed by the following agencies as required by the local building code: ICC-ES, UL, FM, City of Los Angeles, California State Fire Marshal and Caltrans.

APPROVALS/LISTINGS

Trubolt®
Wedge Anchors

ICC Evaluation Service, Inc. # ESR-2251
- – Category 1 performance rating
- – 2006 IBC compliant
- – Meets ACI 318 ductility requirements
- – Tested in accordance with ACI 355.2 and ICC-ES AC193
- – For use in seismic zones A & B
- – 1/4", 3/8" & 1/2" diameter anchors listed in ESR-2251

Underwriters Laboratories
Factory Mutual
City of Los Angeles - #RR2748
California State Fire Marshall
Caltrans
Meets or exceeds U.S. Government G.S.A. Specification A-A-1923A Type 4 (formerlyGSA: FF-S-325 Group II, Type 4, Class 1)

Trubolt®+
Seismic Wedge Anchors

ICC Evaluation Service, Inc. # ESR-2427
- -Category 1 performance rating
- -2006 IBC and 2009 IBC compliant
- -Meets ACI 318 ductility requirements
- -Tested in accordance with ACI 355.2 and ICC-ES AC193
- -Listed for use in seismic zones A, B, C, D, E, & F
- -3/8", 1/2", 5/8" & 3/4" diameter anchors listed in ESR-2427

City of Los Angeles - #RR25867

INSTALLATION STEPS

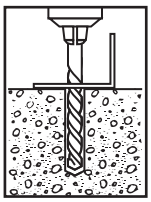

1. Select a carbide drill bit with a diameter equal to the anchor diameter. Drill hole to any depth exceeding the desired embedment. See chart for minimum recommended embedment.

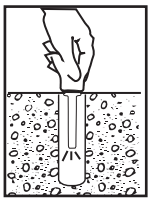

2. Clean hole or continue drilling additional depth to accommodate drill fines.

3. Assemble washer and nut, leaving nut flush with end of anchor to protect threads. Drive anchor through material to be fastened until washer is flush to surface of material.

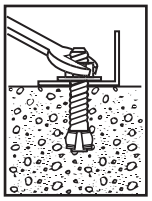

4. Expand anchor by tightening nut 3-5 turns past the hand tight position, or to the specified torque requirement.

LENGTH INDICATION CODE *

CODE	LENGTH OF ANCHOR		CODE	LENGTH OF ANCHOR	
A	1-1/2 < 2	(38.1 < 50.8)	K	6-1/2 < 7	(165.1 < 177.8)
B	2 < 2-1/2	(50.8 < 63.5)	L	7 < 7-1/2	(177.8 < 190.5)
C	2-1/2 < 3	(63.5 < 76.2)	M	7-1/2 < 8	(190.5 < 203.2)
D	3 < 3-1/2	(76.2 < 88.9)	N	8 < 8-1/2	(203.2 < 215.9)
E	3-1/2 < 4	(88.9 < 101.6)	O	8-1/2 < 9	(215.9 < 228.6)
F	4 < 4-1/2	(101.6 < 114.3)	P	9 < 9-1/2	(228.6 < 241.3)
G	4-1/2 < 5	(114.3 < 127.0)	Q	9-1/2 < 10	(241.3 < 254.0)
H	5 < 5-1/2	(127.0 < 139.7)	R	10 < 11	(254.0 < 279.4)
I	5-1/2 < 6	(139.7 < 152.4)	S	11 < 12	(279.4 < 304.8)
J	6 < 6-1/2	(152.4 < 165.1)	T	12 < 13	(304.8 < 330.2)

*Located on top of anchor for easy inspection.

Trubolt®+
Seismic Wedge Anchors

APPENDIX C: Strength Design Performance values in accordance to 2006 and 2009 IBC

ITW RED HEAD TRUBOLT+ WEDGE ANCHOR DESIGN INFORMATION TESTED TO ICC-ES AC 193 AND ACI 355.2, IN ACCORDANCE WITH 2006 and 2009 IBC

Trubolt+ Seismic Wedge Anchors

TRUBOLT+ WEDGE ANCHOR DESIGN INFORMATION[1]

Characteristic	Symbol	Units	Nominal Anchor Diameter (inch)[4]									
			3/8"		1/2"				5/8"		3/4"	
Anchor category	1, 2 or 3	—	1		1				1		1	
Minimum effective embedment depth	h_{ef}	in	1-5/8		2		3-1/4		2-3/4	4-1/4	3-3/4	
Minimum concrete member thickness	h_{min}	in	4	5	4	6	6	8	6	6-1/4	7	8
Critical edge distance	c_{ac}	in	5	3	6	6	7-1/2	6	7-1/2	6-1/2	12	10
Data for Steel Strengths – Tension and Shear												
Minimum specified yield strength	f_y	psi	60,000		55,000				55,000		55,000	
Minimum specified ultimate strength	f_{uta}	psi	75,000		75,000				75,000		75,000	
Effective tensile stress area (neck)	A_{se}	in^2	0.056		0.119				0.183		0.266	
Effective tensile stress area (thread)	A_{se}	in^2	0.075		0.142				0.217		0.332	
Steel strength in tension	N_{sa}	lbf	4,200		8,925				13,725		19,950	
Steel strength in shear, uncracked or cracked concrete[6]	V_{sa}	lbf	1,830		5,175				8,955		14,970	
Steel strength in shear – seismic loads	V_{eq}	lbf	1,545		5,175				8,955		11,775	
Strength reduction factor *f* for tension, steel failure modes[2]			0.75		0.75				0.75		0.75	
Strength reduction factor *f* for shear, steel failure modes[2]			0.60		0.65				0.65		0.65	
Data for Concrete Breakout Concrete Pryout Strengths in Tension and Shear												
Effectiveness factor – uncracked concrete	k_{uncr}	—	24		24				24		24	
Effectiveness factor – cracked concrete	k_{cr}	—	17		17				17		17	
Modification factor for cracked and uncracked concrete[3]	$\psi_{c,N}$	—	1.0		1.0				1.0		1.0	
Coefficient for pryout strength	k_{cp}	—	1.0		1.0		2.0		2.0		2.0	
Load-bearing length of anchor	l_e	in	1.625		2.0		3.25		2.75	4.25	3.75	
Strength reduction factor ϕ for tension, concrete failure modes, Condition B[2]			0.65		0.65				0.65		0.65	
Strength reduction factor ϕ for shear, concrete failure modes, Condition B[2]			0.70		0.70				0.70		0.70	
Data for Pullout Strengths												
Pullout strength, uncracked concrete	$N_{p,uncr}$	lbf	See Footnote[5]		See Footnote[5]		6,540		5,430	8,900	See Footnote[5]	
Pullout strength, cracked concrete	$N_{p,cr}$	lbf	See Footnote[5]		See Footnote[5]				See Footnote[5]		See Footnote[5]	
Pullout strength for seismic loads	N_{eq}	lbf	See Footnote[5]		See Footnote[5]				See Footnote[5]	6,715	See Footnote[5]	
Strength reduction factor *f* for tension, pullout failure modes, Condition B[2]			See Footnote[5]		0.65				0.65		See Footnote[5]	
Additional Anchor Data												
Axial stiffness in service load range in uncracked concrete	b_{uncr}	lbf/in	100,000		250,000				250,000		250,000	
Axial stiffness in service load range in cracked concrete	b_{cr}	lbf/in	40,000		20,000				20,000		20,000	

For SI: 1 inch = 25.4 mm, 1 in2 = 645.16mm2, 1 lbf = 4.45 N, 1 psi = 0.006895 MPa, 1 lbf • 102/in - 17,500 N/m.

[1] The 1/2", 5/8" and 3/4" diameter Trubolt+ Wedge Anchors are ductile steel elements as defined by ACI 318 D.1. The 3/8" diameter Trubolt+ is considered ductile under tension loading and brittle under shear loading.

[2] All values of ϕ apply to the load combinations of IBC Section 1605.2, ACI 318 Section 9.2 or UBC Section 1612.2. If the load combinations of Appendix C or UBC Section 1909.2 are used, the appropriate value of ϕ must be determined in accordance with ACI 318 D.4.5. For installations where reinforcement that complies with ACI 318 Appendix D requirements for Condition A is present, the appropriate ϕ factor must be determined in accordance with ACI 318 D.4.4.

[3] For all design cases $\Psi_{c,N} = 1.0$. The appropriate effectiveness factor for cracked concrete (k_{cr}) or uncracked concrete (k_{uncr}) must be used.

[4] The actual diameter for the 3/8" diameter anchor is 0.361" for the 5/8" diameter anchor is 0.615" and the 3/4" diameter anchor is 0.7482".

[5] Anchor pullout strength does not control anchor design. Determine steel and concrete capacity only.

[6] Steel strength in shear values are based on test results per ACI 355.2, Section 9.4 and must be used for design.

TRUBOLT+ WEDGE ANCHOR (INSTALLED)

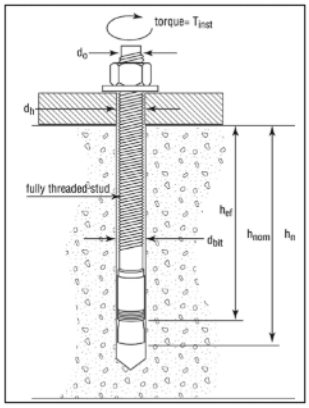

TRUBOLT+ WEDGE INSTALLATION INFORMATION

Parameter	Notation	Units	Nominal Achor Diameter (inch)									
			3/8		1/2				5/8		3/4	
Anchor outer diameter	d_o	inches	0.361		0.5				0.615		0.7482	
Nominal carbide bit diameter	d_{bit}	inches	3/8		1/2				5/8		3/4	
Effective embedment depth	h_{ef}	inches	1-5/8		2		3-1/4		2-3/4	4-1/4	3-3/4	
Minimum anchor embedment depth	h_{nom}	inches	2		2-1/2		3-3/4		3-1/4	4-3/4	4-3/8	
Minimum hole depth[1]	h_o	inches	2-1/4		2-3/4		4		3-1/2	5	4-5/8	
Minimum concrete member thickness[1]	h_{min}	inches	4	5	4	6	6	8	6	6-1/4	7	8
Critical edge distance[1]	c_{ac}	In.	5	3	6	6	7-1/2	6	7-1/2	6-1/2	12	10
Minimum anchor spacing[1]	s_{min}	In.	3-1/2	2-1/2	6	5-3/4	4	5-3/4	8	6	6	6
Minimum edge distance[1]	c_{min}	In.	3		6				7-1/2	5	7-1/2	7-1/2
Minimum overall anchor length	l	inches	2-1/2		3-3/4		4-1/2		4-1/4	6	5-1/2	
Installation torque	T_{inst}	ft-lb	30		45				90		110	
Minimum diameter of hole in fastened part	d_h	inches	1/2		5/8				3/4		7/8	

For SI: 1 inch = 25.4 mm, 1 ft-lb = 1.356 N-m.

APPENDIX C: Strength Design Performance values in accordance to 2006 and 2009 IBC

TRUBOLT+ WEDGE ANCHOR ALLOWABLE STRESS DESIGN (ASD) VALUES FOR ILLUSTRATIVE PURPOSES

Anchor Notation	Anchor Embedment Depth	Effective Embedment Depth	Allowable Tension Load
	(inches), h_{nom}	(inches), h_{ef}	(lbs)
3/8	2	1-5/8	1,090
1/2	2-1/2	2	1,490
	3-3/4	3-1/4	2,870
5/8	3-1/4	2-3/4	2,385
	4-3/4	4-1/4	3,910
3/4	4-3/8	3-3/4	3,825

For SI: 1 inch = 25.4 mm, 1 ft-lb = 4.45N.
Design Assumptions:
1 Single anchor with static shear load only.
2 Load combinations from 2006 IBC, Sections 1605.2.1 and 1605.3.1 (no seismic loading).
3 Thirty percent dead load and 70 percent live load, controlling load combination 1.2D + 1.6L
4 Calculation of weighted average: 1.2D + 1.6L = 1.2 (0.3) + 1.6 (0.7) = 1.48
5 Values do not include edge distance or spacing reductions.

ITW RED HEAD TRUBOLT+ WEDGE ANCHOR DESIGN INFORMATION FOR INSTALLATION IN THE SOFFIT OF CONCRETE FILL ON METAL DECK FLOOR AND ROOF ASSEMBLIES

TRUBOLT+ WEDGE ANCHOR DESIGN INFORMATION

Characteristic	Symbol	Units	Nominal Anchor Diameter				
			3/8"	1/2"		5/8"	
			Upper /Lower	Upper /Lower	Lower Only	Lower Only	Lower Only
			h_{ef} = 1-5/8"	h_{ef} = 2"	h_{ef} = 3-1/4"	h_{ef} = 2-3/4"	h_{ef} = 4-1/4"
Pullout strength, uncracked concrete over metal deck	$N_{p, deck, uncr}$	lbf	2,170	2,515	5,285	3,365	6,005
Pullout strength, cracked concrete over metal deck	$N_{p, deck, cr}$	lbf	1,650	1,780	4,025	2,405	5,025
Reduction factor for pullout strength in tension, Condition B	ϕ	--	0.65				
Shear strength, uncracked concrete over metal deck	$V_{p, deck, uncr}$	lbf	1,640	2,200	3,790	2,890	6,560
Reduction factor for steel strength in shear	ϕ	--	0.60	0.65			
Anchor embedment depth	h_{nom}	in	2.0	2.5	3.75	3.25	4.75

For SI: 1 inch = 25.4 mm, 1 lbf = 4.45 N

Nominal Anchor Diameter = 3/8"

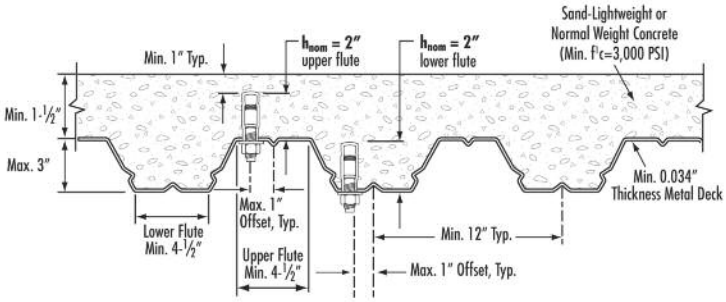

Nominal Anchor Diameter = 5/8"

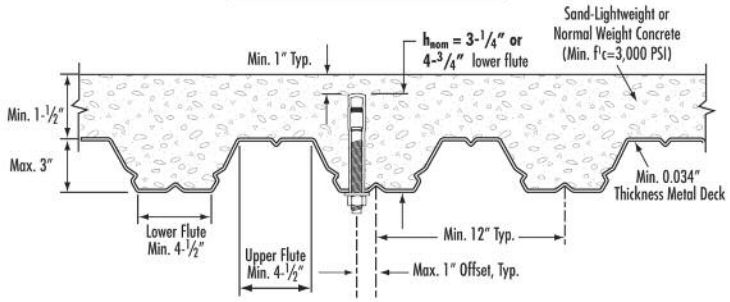

Nominal Anchor Diameter = 1/2"

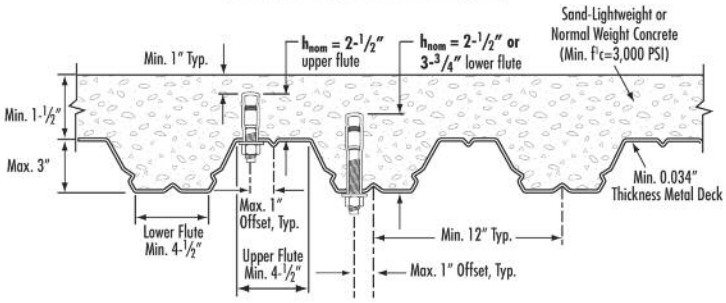

ITW Red Head®

Call our toll free number **800-899-7890** or visit our web site for the most current product and technical information at **www.itwredhead.com**

APPENDIX B: Strength Design Performance values in accordance to 2006 IBC

ITW RED HEAD TRUBOLT WEDGE ANCHOR

DESIGN INFORMATION TESTED TO ICC-ES AC193 AND ACI 355.2, IN ACCORDANCE WITH 2006 IBC

Trubolt®
Wedge Anchors

TRUBOLT WEDGE ANCHOR DESIGN INFORMATION[1,2,3]

DESIGN INFORMATION	Symbol	Units	Nominal Anchor Diameter									
			1/4		3/8		1/2		5/8		3/4	
Anchor O.D.	d_o	in	0.250		0.375		0.500		0.625		0.750	
Effective embedment	h_{ef}	in	1-1/2	2	1-3/4	2-5/8	1-7/8	3-3/8	2-1/2	4	3-1/2	4-3/4
Minimum member thickness	h_{min}	in	4	4	4	5	5	6	5	8	6	8
Critical edge distance	c_{ac}	in	2-5/8	3	2-5/8	5-1/4	3-3/4	6-3/4	5	8	7	9
Minimum edge distance	c_{min}	in	1-3/4	1-1/2	2-1/4	2	3-3/4	3-3/4	4-1/4	3-1/4	3-3/4	3-1/2
Minimum anchor spacing	s_{min}	in	1-3/4	1-1/2	2-1/4	2	3-3/4	3-3/4	4-1/4	3-1/4	3-3/4	3-1/2
Min. Specified Yield Strength	f_y	lb/in^2	55,000									
Min. Specified Ultimate Strength	f_{uta}	lb/in^2	75,000									
Effective tensile stress area	A_{se}	in^2	0.032		0.078		0.142		0.226		0.334	
Steel strength in tension	N_s	lb	2,385		5,815		10,645		16,950		25,050	
Steel strength in shear	V_s	lb	1,430		2,975	3,490	4,450	6,385	6,045	10,170	10,990	15,030
Pullout strength, uncracked concrete	$N_{p,uncr}$	lb	1,392	1,706	2,198	3,469	2,400	4,168	4,155	6,638	8,031	10,561
Anchor Category (All anchors are ductile)			1									
Effectiveness factor k_{uncr} uncracked concrete			24									
Axial stiffness in service load range	β	lb/in	14,651	9,385	17,515	26,424	32,483	26,136	42,899	21,749	43,576	28,697
Coefficient for variation for axial stiffness in service load range			34	47	28	45	17	33	55	22	63	28
Strength reduction factor ϕ for tension, steel failure modes			0.75									
Strength reduction factor ϕ for shear, steel failure modes			0.65									
Strength reduction factor ϕ for tension, concrete failure modes, Condition B			0.65									
Strength reduction factor ϕ for shear, concrete failure modes, Condition B			0.70									

[1] Trubolt+ Anchor Design Strengths must be determined in accordance with ACI 318-05 Appendix D and this table
[2] The Trubolt+ Wedge Anchor is a ductile steel element as defined by ACI 318 D.1
[3] 1/4", 3/8", & 1/2" diameter data is listed in ICC-ES ESR-2251.

Trubolt®
Wedge Anchors

TRUBOLT WEDGE ANCHOR (INSTALLED)

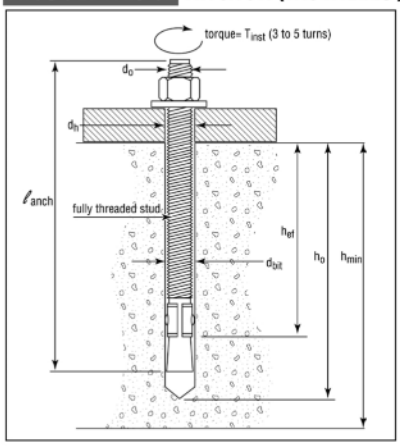

TRUBOLT WEDGE INSTALLATION INFORMATION

	Symbol	Units	Nominal Anchor Diameter (in.)									
			1/4		3/8		1/2		5/8		3/4	
Anchor outer diameter	d_o	in	0.25		0.375		0.5		0.625		0.750	
Nominal carbide bit diameter	d_{bit}	in	1/4		3/8		1/2		5/8		3/4	
Effective embedment depth	h_{ef}	in	1-1/2	2	1-3/4	2-5/8	1-7/8	3-3/8	2-1/2	4	3-1/2	4-3/4
Min hole depth	h_o	in	2	2-1/2	2-1/2	3-3/8	2-3/4	4-1/4	3-3/4	5-1/4	4-3/4	6
Min slab thickness	h_{min}	in	4		4	5	5	6	5	8	6	8
Installation torque	T_{inst}	ft-lb	4		25		55		90		110	
Min hole diameter in fixture	d_h	in	5/16		7/16		9/16		11/16		13/16	

APPENDIX B: Strength Design Performance values in accordance to 2006 IBC

Trubolt®
Wedge Anchors

TRUBOLT WEDGE PULLOUT STRENGTH ($N_{p,\ unc}$) (POUNDS) [1]

Nominal Anchor Diameter (in.)	Effective Embedment Depth (in.)	Concrete Compressive Strength			
		f'c = 2,500 psi	f'c = 3,000 psi	f'c = 4,000 psi	f'c = 6,500 psi
1/4	1-1/2	1,392	1,525	1,610	1,822
	2	1,706	1,869	1,947	2,151
3/8	1-3/4	2,198	2,408	2,621	3,153
	2-5/8	3,469	3,800	3,936	4,275
1/2	1-7/8	2,400	2,629	3,172	4,520
	3-3/8	4,168	4,520	4,520	4,520
5/8	2-1/2	4,155	4,155	4,376	5,578
	4	6,638	6,900	7,968	10,157
3/4	3-1/2	8,031	8,322	9,610	12,251
	4-3/4	10,561	10,561	10,561	12,251

For SI: 1 inch = 25.4 mm, 1 lbf = 4.45 N, 1 psi = 0.006895 Mpa
1 Values are for single anchors with no edge distance or spacing reduction.

TRUBOLT WEDGE ANCHOR ALLOWABLE STATIC TENSION (ASD), NORMAL-WEIGHT UNCRACKED CONCRETE [1-6]

Nominal Anchor Diameter (in.)	Effective Embedment Depth (in.)	Concrete Compressive Strength			
		f'c = 2,500 psi	f'c = 3,000 psi	f'c = 4,000 psi	f'c = 6,500 psi
1/4	1-1/2	611	670	707	800
	2	749	821	855	945
3/8	1-3/4	965	1,058	1,151	1,385
	2-5/8	1,524	1,669	1,729	1,878
1/2	1-7/8	1,054	1,155	1,393	1,985
	3-3/8	1,831	1,985	1,985	1,985
5/8	2-1/2	1,825	1,825	1,922	2,450
	4	2,915	3,030	3,499	4,461
3/4	3-1/2	3,527	3,655	4,221	5,381
	4-3/4	4,638	4,638	4,638	5,381

For SI: 1 inch = 25.4 mm, 1 lbf = 4.45 N, 1 psi = 0.006895 Mpa
Design Assumptions:
1 Single anchor with static tension load only.
2 Concrete determined to remain uncracked for the life of the anchorage.
3 Load combinations from 2006 IBC, Sections 1605.2.1 and 1605.3.1 (no seismic loading).
4 Thirty percent dead load and 70 percent live load, controlling load combination 1.2D + 1.6L
5 Calculation of weighted average: 1.2D + 1.6L = 1.2 (0.3) + 1.6 (0.7) = 1.48
6 Values do not include edge distance or spacing reductions.

2006 IBC Compliant

TRUBOLT WEDGE ANCHOR ALLOWABLE STATIC SHEAR (ASD), STEEL (POUNDS)[1-5]

Nominal Anchor Diameter (in.)	Effective Embedment Depth (in.)	Allowable Steel Capacity, Static Shear
1/4	1-1/2	628
	2	
3/8	1-3/4	1,307
	2-5/8	1,533
1/2	1-7/8	1,954
	3-3/8	2,804
5/8	2-1/2	2,655
	4	4,467
3/4	3-1/2	4,827
	4-3/4	6,601

For SI: 1 inch = 25.4 mm, 1 lbf = 4.45 N, 1 psi = 0.006895 Mpa
Design Assumptions:
1 Single anchor with static shear load only.
3 Load combinations from 2006 IBC, Sections 1605.2.1 and 1605.3.1 (no seismic loading).
3 Thirty percent dead load and 70 percent live load, controlling load combination 1.2D + 1.6L
4 Calculation of weighted average: 1.2D + 1.6L = 1.2 (0.3) + 1.6 (0.7) = 1.48
5 Values do not include edge distance or spacing reductions.

PERFORMANCE TABLE

Trubolt Wedge Anchors — Ultimate Tension and Shear Values (Lbs/kN) in Concrete*

ANCHOR DIA. In. (mm)	INSTALLATION TORQUE Ft. Lbs. (Nm)	EMBEDMENT DEPTH In. (mm)	ANCHOR TYPE	f'c = 2000 PSI (13.8 MPa) TENSION Lbs. (kN)	f'c = 2000 PSI (13.8 MPa) SHEAR Lbs. (kN)	f'c = 4000 PSI (27.6 MPa) TENSION Lbs. (kN)	f'c = 4000 PSI (27.6 MPa) SHEAR Lbs. (kN)	f'c = 6000 PSI (41.4 MPa) TENSION Lbs. (kN)	f'c = 6000 PSI (41.4 MPa) SHEAR Lbs. (kN)
1/4 (6.4)	4 (5.4)	1-1/8 (28.6)	WS-Carbon or WS-G Hot-Dipped Galvanized or WW-304 S.S. or SWW-316 S.S.	1,180 (5.2)	1,400 (6.2)	1,780 (7.9)	1,400 (6.2)	1,900 (8.5)	1,400 (6.2)
		1-15/16 (49.2)		2,100 (9.3)	1,680 (7.5)	3,300 (14.7)	1,680 (7.5)	3,300 (14.7)	1,680 (7.5)
		2-1/8 (54.0)		2,260 (10.1)	1,680 (7.5)	3,300 (14.7)	1,680 (7.5)	3,300 (14.7)	1,680 (7.5)
3/8 (9.5)	25 (33.9)	1-1/2 (38.1)		1,680 (7.5)	2,320 (10.3)	2,240 (10.0)	2,620 (11.7)	2,840 (12.6)	3,160 (14.1)
		3 (76.2)		3,480 (15.5)	4,000 (17.8)	5,940 (26.4)	4,140 (18.4)	6,120 (27.2)	4,500 (20.0)
		4 (101.6)		4,800 (21.4)	4,000 (17.8)	5,940 (26.4)	4,140 (18.4)	6,120 (27.2)	4,500 (20.0)
1/2 (12.7)	55 (74.6)	2-1/4 (57.2)		4,660 (20.7)	4,760 (21.2)	5,100 (22.7)	4,760 (21.2)	7,040 (31.3)	7,040 (31.3)
		4-1/8 (104.8)		4,660 (20.7)	7,240 (32.2)	9,640 (42.9)	7,240 (32.2)	10,820 (48.1)	8,160 (36.3)
		6 (152.4)		5,340 (23.8)	7,240 (32.2)	9,640 (42.9)	7,240 (32.2)	10,820 (48.1)	8,160 (36.3)
5/8 (15.9)	90 (122.0)	2-3/4 (69.9)		6,580 (29.3)	7,120 (31.7)	7,180 (31.9)	7,120 (31.7)	9,720 (43.2)	9,616 (42.8
		5-1/8 (130.2)		6,580 (29.3)	9,600 (42.7)	14,920 (66.4)	11,900 (52.9)	16,380 (72.9)	12,520 (55.7)
		7-1/2 (190.5)		7,060 (31.4)	9,600 (42.7)	15,020 (66.8)	11,900 (52.9)	16,380 (72.9)	12,520 (55.7)
3/4 (19.1)	110 (149.2)	3-1/4 (82.6)		7,120 (31.7)	10,120 (45.0)	10,840 (48.2)	13,720 (61.0)	13,300 (59.2)	15,980 (71.1)
		6-5/8 (168.3)		10,980 (48.8)	20,320 (90.4)	17,700 (78.7)	23,740 (105.6)	20,260 (90.1)	23,740 (105.6)
		10 (254.0)		10,980 (48.8)	20,320 (90.4)	17,880 (79.5)	23,740 (105.6)	23,580 (104.9)	23,740 (105.6)
7/8 (22.2)	250 (339.0)	3-3/4 (95.3)		9,520 (42.3)	13,160 (58.5)	14,740 (65.6)	16,580 (73.8)	17,420 (77.5)	19,160 (85.2)
		6-1/4 (158.8)		14,660 (65.2)	20,880 (92.9)	20,940 (93.1)	28,800 (128.1)	24,360 (108.4)	28,800 (128.1)
		8 (203.2)		14,660 (65.2)	20,880 (92.9)	20,940 (93.1)	28,800 (128.1)	24,360 (108.4)	28,800 (128.1)
1 (25.4)	300 (406.7)	4-1/2 (114.3)		13,940 (62.0)	16,080 (71.5)	20,180 (89.8)	22,820 (101.5)	21,180 (94.2)	24,480 (108.9)
		7-3/8 (187.3)		14,600 (64.9)	28,680 (127.6)	23,980 (106.7)	37,940 (168.8)	33,260 (148.0)	38,080 (169.4)
		9-1/2 (241.3)		18,700 (83.2)	28,680 (127.6)	26,540 (118.1)	37,940 (168.8)	33,260 (148.0)	38,080 (169.4)

* Allowable values are based upon a 4 to 1 safety factor. Divide by 4 for allowable load values.
* For Tie-Wire Wedge Anchor, TW-1400, use tension data from 1/4" diameter with 1-1/8" embedment.
* For continuous extreme low temperature applications, use stainless steel.

Trubolt Wedge Anchors — Ultimate Tension and Shear Values (Lbs/kN) in Lightweight Concrete*

ANCHOR DIA. In. (mm)	INSTALLATION TORQUE Ft. Lbs. (Nm)	EMBEDMENT DEPTH In. (mm)	ANCHOR TYPE	LIGHTWEIGHT CONCRETE f'c = 3000 PSI (20.7 MPa) TENSION Lbs. (kN)	LIGHTWEIGHT CONCRETE f'c = 3000 PSI (20.7 MPa) SHEAR Lbs. (kN)	LOWER FLUTE OF STEEL DECK WITH LIGHTWEIGHT CONCRETE FILL f'c = 3000 PSI (20.7 MPa) TENSION Lbs. (kN)	LOWER FLUTE OF STEEL DECK WITH LIGHTWEIGHT CONCRETE FILL f'c = 3000 PSI (20.7 MPa) SHEAR Lbs. (kN)
3/8 (9.5)	25 (33.9)	1-1/2 (38.1)	WS-Carbon or WS-G Hot-Dipped Galvanized or WW-304 S.S. or SWW-316 S.S.	1,175 (5.2)	1,480 (6.6)	1,900 (8.5)	3,160 (14.1)
		3 (76.2)		2,825 (12.6)	2,440 (10.9)	2,840 (12.6)	4,000 (17.8)
1/2 (12.7)	55 (74.6)	2-1/4 (57.2)		2,925 (13.0)	2,855 (12.7)	3,400 (15.1)	5,380 (23.9)
		3 (76.2)		3,470 (15.4)	3,450 (15.3)	4,480 (19.9)	6,620 (29.4)
		4 (101.6)		4,290 (19.1)	3,450 (15.3)	4,800 (21.4)	6,440 (28.6)
5/8 (15.9)	90 (122.0)	3 (76.2)		4,375 (19.5)	4,360 (19.4)	4,720 (21.0)	5,500 (24.5)
		5 (127.0)		6,350 (28.2)	6,335 (28.2)	6,580 (29.3)	9,140 (40.7)
3/4 (19.1)	110 (149.2)	3-1/4 (82.6)		5,390 (24.0)	7,150 (31.8)	5,840 (26.0)	8,880 (39.5)
		5-1/4 (133.4)		7,295 (32.5)	10,750 (47.8)	7,040 (31.3)	--- ---

* Allowable values are based upon a 4 to 1 safety factor. Divide by 4 for allowable load values.

PERFORMANCE TABLE

Trubolt Wedge Anchors — Recommended Edge and Spacing Distance Requirements for Shear Loads*

ANCHOR DIA. In. (mm)	EMBEDMENT DEPTH In. (mm)	ANCHOR TYPE	EDGE DISTANCE REQUIRED TO OBTAIN MAX. WORKING LOAD In. (mm)	MIN. EDGE DISTANCE AT WHICH THE LOAD FACTOR APPLIED = .60 In. (mm)	MIN. EDGE DISTANCE AT WHICH THE LOAD FACTOR APPLIED = .20 In. (mm)	SPACING REQUIRED TO OBTAIN MAX. WORKING LOAD In. (mm)	MIN. ALLOWABLE SPACING BETWEEN ANCHORS In. (mm) LOAD FACTOR APPLIED = .40
1/4 (6.4)	1-1/8 (28.6) 1-15/16 (49.2)	WS-Carbon or WS-G Hot-Dipped Galvanized or WW-304 S.S. or SWW-316 S.S.	2 (50.8) 1-15/16 (49.2)	1-5/16 (33.3) 1 (25.4)	--- ---	3-15/16 (100.0) 3-7/8 (98.4)	2 (50.8) 1-15/16 (49.2)
3/8 (9.5)	1-1/2 (38.1) 3 (76.2)		2-5/8 (66.7) 3-3/4 (95.3)	1-3/4 (44.5) 3 (76.2)	--- 1-1/2 (38.1)	5-1/4 (133.4) 6 (152.4)	2-5/8 (66.7) 3 (76.2)
1/2 (12.7)	2-1/4 (57.2) 4-1/8 (104.8)		3-15/16 (100.0) 5-3/16 (131.8)	2-9/16 (65.1) 3-1/8 (79.4)	--- 1-9/16 (39.7)	7-7/8 (200.0) 6-3/16 (157.2)	3-15/16 (100.0) 3-1/8 (79.4)
5/8 (15.9)	2-3/4 (69.9) 5-1/8 (130.2)		4-13/16 (122.2) 6-7/16 (163.5)	3-1/8 (79.4) 3-7/8 (98.4)	--- 1-15/16 (49.2)	9-5/8 (244.5) 7-11/16 (195.3)	4-13/16 (122.2) 3-7/8 (98.4)
3/4 (19.1)	3-1/4 (82.6) 6-5/8 (168.3)		5-11/16 (144.5) 6-5/16 (160.3)	3-3/4 (95.3) 5 (127.0)	--- 2-1/2 (63.5)	11-3/8 (288.9) 9-15/16 (252.4)	5-11/16 (144.5) 5 (127.0)
7/8 (22.2)	3-3/4 (95.3) 6-1/4 (158.8)		6-9/16 (166.7) 8-1/2 (215.9)	4-5/16 (109.5) 6-1/4 (158.8)	--- 3-1/8 (79.4)	13-1/8 (333.4) 12-1/2 (317.5)	6-9/16 (166.7) 6-1/4 (158.8)
1 (25.4)	4-1/4 (108.0) 7-3/8 (187.3)		7-7/8 (200.0) 10-1/16 (255.6)	5-1/8 (130.2) 7-3/8 (187.3)	--- 3-11/16 (93.7)	15-3/4 (400.1) 14-3/4 (374.7)	7-7/8 (200.0) 7-3/8 (187.3)

* Spacing and edge distances shall be divided by 0.75 when anchors are placed in structural lightweight concrete. Linear interpolation may be used for intermediate spacing and edge distances.

Trubolt Wedge Anchors — Recommended Edge and Spacing Distance Requirements for Tension Loads*

ANCHOR DIA. In. (mm)	EMBEDMENT DEPTH In. (mm)	ANCHOR TYPE	EDGE DISTANCE REQUIRED TO OBTAIN MAX. WORKING LOAD In. (mm)	MIN. ALLOWABLE EDGE DISTANCE AT WHICH THE LOAD FACTOR APPLIED = .65 In. (mm)	SPACING REQUIRED TO OBTAIN MAX. WORKING LOAD In. (mm)	MIN. ALLOWABLE SPACING AT WHICH THE LOAD FACTOR APPLIED = .70 In. (mm)
1/4 (6.4)	1-1/8 (28.6) 1-15/16 (49.2) 2-1/8 (54.0)	WS-Carbon or WS-G Hot-Dipped Galvanized or WW-304 S.S. or SWW-316 S.S.	2 (50.8) 1-15/16 (49.2) 1-5/8 (41.3)	1 (25.4) 1 (25.4) 13/16 (20.6)	3-15/16 (100.0) 3-7/8 (98.4) 3-3/16 (81.0)	2 (50.8) 1-15/16 (49.2) 1-5/8 (41.3)
3/8 (9.5)	1-1/2 (38.1) 3 (76.2) 4 (101.6)		2-5/8 (66.7) 3 (76.2) 3 (76.2)	1-5/16 (33.3) 1-1/2 (38.1) 1-1/2 (38.1)	5-1/4 (133.4) 6 (152.4) 6 (152.4)	2-5/8 (66.7) 3 (76.2) 3 (76.2)
1/2 (12.7)	2-1/4 (57.2) 4-1/8 (104.8) 6 (152.4)		3-15/16 (100.0) 3-1/8 (79.4) 4-1/2 (114.3)	2 (50.8) 1-9/16 (39.7) 2-1/4 (57.2)	7-7/8 (200.0) 6-3/16 (157.2) 9 (228.6)	3-15/16 (100.0) 3-1/8 (79.4) 4-1/2 (114.3)
5/8 (15.9)	2-3/4 (69.9) 5-1/8 (130.2) 7-1/2 (190.5)		4-13/16 (122.2) 3-7/8 (98.4) 5-5/8 (142.9)	2-7/16 (61.9) 1-15/16 (49.2) 2-13/16 (71.4)	9-5/8 (244.5) 7-1/16 (195.3) 11-1/4 (285.8)	4-13/16 (122.2) 3-7/8 (98.4) 5-5/8 (142.9)
3/4 (19.1)	3-1/4 (82.6) 6-5/8 (168.3) 10 (254.0)		5-11/16 (144.5) 5 (127.0) 7-1/2 (190.5)	2-7/8 (73.0) 2-1/2 (63.5) 3-3/4 (95.3)	11-3/8 (288.9) 9-15/16 (252.4) 15 (381.0)	5-11/16 (144.5) 5 (127.0) 7-1/2 (190.5)
7/8 (22.2)	3-3/4 (95.3) 6-1/4 (158.8) 8 (203.2)		6-9/16 (166.7) 6-1/4 (158.8) 6 (152.4)	3-5/16 (84.1) 3-1/8 (79.4) 3 (76.2)	13-1/8 (333.4) 12-1/2 (317.5) 12 (304.8)	6-9/16 (166.7) 6-1/4 (158.8) 6 (152.4)
1 (25.4)	4-1/2 (114.3) 7-3/8 (187.3) 9-1/2 (241.3)		7-7/8 (200.0) 7-3/8 (187.3) 7-1/8 (181.0)	3-15/16 (100.0) 3-11/16 (93.7) 3-9/16 (90.5)	15-3/4 (400.1) 14-3/4 (374.7) 14-1/4 (362.0)	7-7/8 (200.0) 7-3/8 (187.3) 7-1/8 (181.0)

* Spacing and edge distances shall be divided by 0.75 when anchors are placed in structural lightweight concrete. Linear interpolation may be used for intermediate spacing and edge distances.

Combined Tension and Shear Loading—for Trubolt Anchors

Allowable loads for anchors subjected to combined shear and tension forces are determined by the following equation:

$$(Ps/Pt)^{5/3} + (Vs/Vt)^{5/3} \leq 1$$

Ps = Applied tension load Vs = Applied shear load Pt = Allowable tension load Vt = Allowable shear load

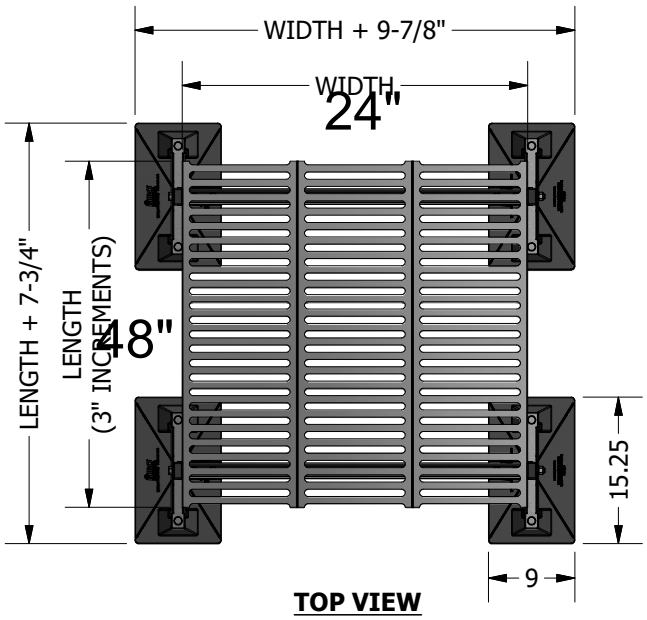

TOP VIEW

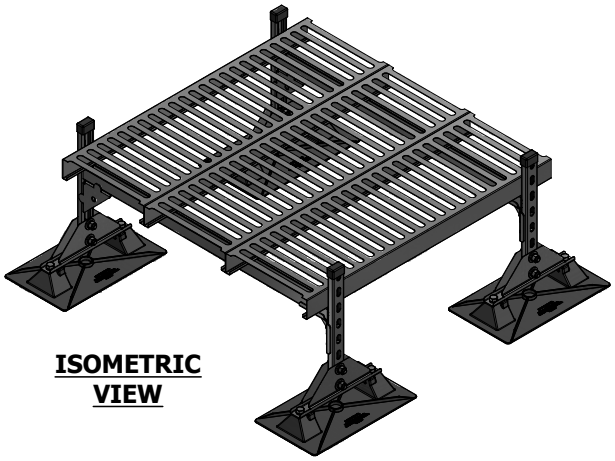

ISOMETRIC VIEW

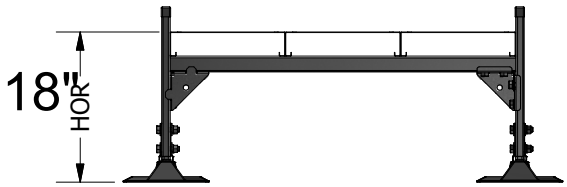

FRONT VIEW

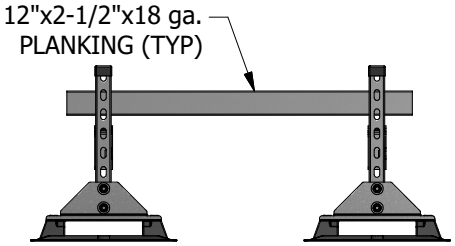

SIDE VIEW

ACCESSORIES

- 9 x 15.25 Support pad
- Eternabond® 2-sided tape

PRODUCT DESCRIPTION

The MIRO HD-Mechanical Supports are designed to elevate rooftop mechanical units, cabinets and other devices.

The HD-Mechanical Support deck is 12" x 2-1/2" x 18 ga. planking. The supports are adjustable in height per the project requirements. All metal parts are hot-dip galvanized for outdoor weathering protection. The support bases are injection molded Polycarbonate.

KEY INFORMATION

- Designed to support mechanical units, cabinets and other devices.
- Designed to meet project specific dimensions with adjustability as specified.
- Support Deck is constructed of 12" x 2-1/2" x 18 ga. metal planking. (Bar Grating may be specified or required depending on loading and dimensional requirements)
- Support is designed to not exceed 3.0 psi to the finished roof surface under each base.
- Base Material: Polycarbonate
- All metal parts are either stainless steel, hot-dip galvanized or pre-galvanized.
- Non-Anchored supports do not provide significant resistance to wind or seismic loading. Contact MIRO Industries for wind and seismic solutions.
- Manufacturer suggested loading is not to exceed 300 lbs to each base. Contractor to ensure load distribution to each base does not exceed suggested loading to each base.

DATE: JAN 2019

6-HD(P) Mechanical Support

MIRO INDUSTRIES, INC. **ROOFTOP SUPPORT PRODUCTS**

ELEVATE SERIES | CONDUIT SUPPORT 2.5

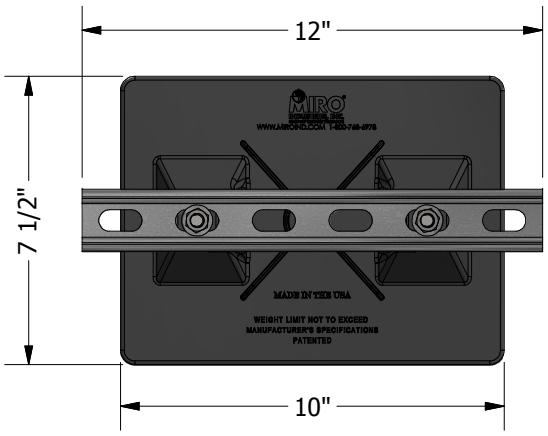

TOP VIEW

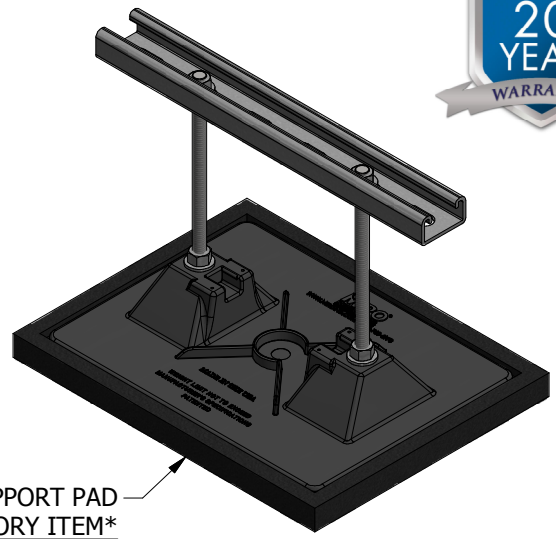

ISOMETRIC VIEW

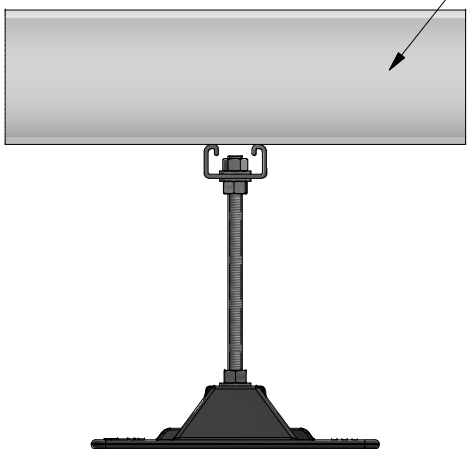

SIDE VIEW

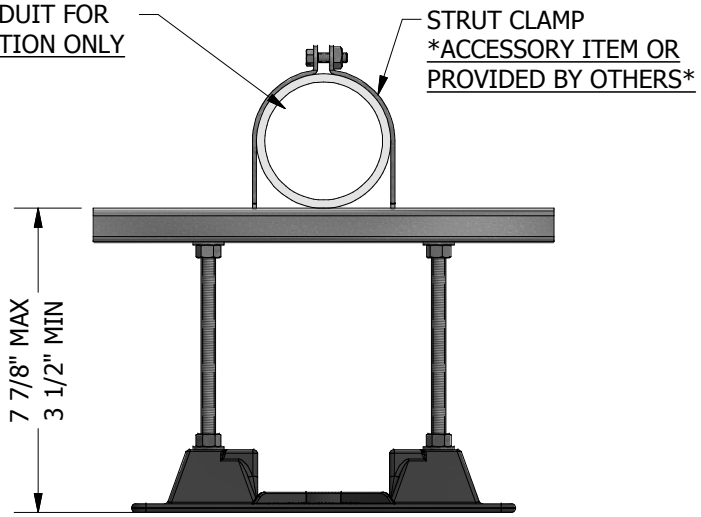

FRONT VIEW

ACCESSORIES

- Strut Clamp - Order to Pipe O.D.
- 7-1/2 x 10 Support pad
- Eternabond® 2-sided tape

PRODUCT DESCRIPTION

A pipe support with "strut" used to support roof-mounted electrical conduit, solar piping, gas pipes and other mechanical piping. Pipes rest on a 12" length of strut which is mounted on the base. The pipes can be fastened by using the appropriate pipe clamp.

KEY INFORMATION

- Designed to support conduit (ganged) cable trays or other mechanical piping.
- Adjustable height from 3-1/2" to 7-7/8", even load required, maximum load is 115 lbs.
- 12 per case, 31 lbs. per case
- Recommended spacing is not to exceed 10 feet centers depending upon the load. Make certain each stand is properly elevated to even load weight at all stands.
- Base Material: Polycarbonate
- All metal parts are either stainless steel or hot-dip galvanized.

Snap 'N Shield™ Pipe Support

Size Range:
2 1/4" (57.1mm), 3 1/4" (82.5mm), 4 1/4" (107.9mm), 5 1/4" (133.3mm), 6 1/4" (158.7mm), and 8 5/8" (219.1mm) Shield Openings

Material: Plastic - Black & White

Features:
- Ideal for horizontal pipe runs.
- Offers maximum protection for insulated pipe.
- Snaps directly onto channel.
- Shield length is 12" (304.8mm).
- Fast, easy installation – no tools required.
- Snap-on design eliminates shield movement, preventing insulation damage that can lead to costly leaks.
- Allows pipe to expand without damaging the insulation.
- Protects insulation from damage caused by rubbing against other pipes and fittings.
- Designed for side-by-side installations.
- The most reliable, durable, and cost-effective way to protect your insulation.
- Patent Pending.

Order By: Part number.

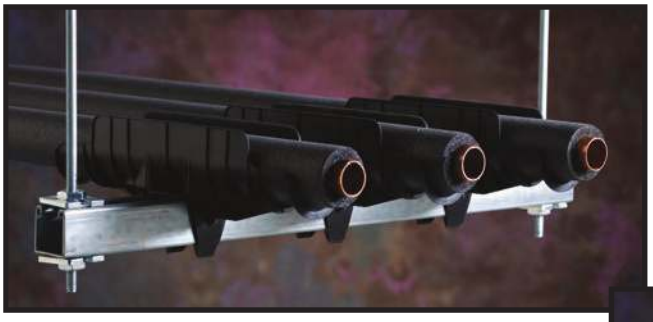

Technical Specifications

Applications: Refrigeration, Air Conditioning, and Plumbing

Material: Basell Pro-Fax 8523 Polypropylene Copolymer
- UV resistant
- Operating temperature -40°F (-40.0°C) to +178°F (81.1°C)
- Paintable (Preserves mechanical properties even after painting)
- Non-adhesive surface for linear expansion of thermal insulation

Certification: UL Classified for USA (UL-723 (ASTM E84)) and ULC listed for Canada (ULC-S102.2). Meets UL94 HB flammability standards

All dimensions in charts and on drawings are in inches. Dimensions shown in parentheses are in millimeters unless otherwise specified.

Snap'N Shield™ Pipe Support

Black Shields Part Number	White Shields Part Number	Gray Shields Part Number	Inside Opening in. (mm)	Approx. Wt./100 Lbs. (kg)
BPS225B	BPS225W	--	2 1/4" (57)	26 (11.8)
BPS325B	BPS325W	--	3 1/4" (82)	37 (16.8)
BPS425B	BPS425W	--	4 1/4" (108)	52 (23.6)
BPS525B	BPS525W	--	5 1/4" (133)	69 (31.3)
BPS625B	BPS625W	--	6 1/4" (159)	83 (37.6)
BPS825B	BPS835W	BPS825G	8 1/4" (209)	103 (46.7)
BPSCB	BPSCW		Universal Cover	22 (10.0)

Copper Tubing Size	Insulation Thickness 1/2"	3/4"	1"	1 1/2"	2"
1/4"	BPS225	BPS225	BPS325	BPS425	BPS525
3/8"	BPS225	BPS225	BPS325	BPS425	BPS525
1/2"	BPS225	BPS225	BPS325	BPS425	BPS525
5/8"	BPS225	BPS325	BPS325	BPS425	BPS525
3/4"	BPS225	BPS325	BPS325	BPS425	BPS525
1"	BPS225	BPS325	BPS325	BPS425	BPS525
1 1/4"	BPS325	BPS325	BPS425	BPS525	BPS625
1 1/2"	BPS325	BPS325	BPS425	BPS525	BPS625
2"	BPS325	BPS425	BPS425	BPS525	BPS625
2 1/2"	BPS425	BPS425	BPS525	BPS625	BPS825
3"	BPS425	BPS525	BPS525	BPS625	BPS825
3 1/2"	BPS525	BPS525	BPS625	BPS825	BPS825
4"	BPS525	BPS625	BPS625	BPS825	BPS825

Sch. 40/80 Pipe	Insulation Thickness 1/2"	3/4"	1"	1 1/2"	2"
1/4"	BPS225	BPS225	BPS325	BPS425	BPS525
3/8"	BPS225	BPS225	BPS325	BPS425	BPS525
1/2"	BPS225	BPS325	BPS325	BPS425	BPS525
3/4"	BPS225	BPS325	BPS325	BPS425	BPS525
1"	BPS325	BPS325	BPS425	BPS525	BPS625
1 1/2"	BPS325	BPS325	BPS425	BPS525	BPS625
1 1/2"	BPS325	BPS425	BPS425	BPS525	BPS625
2"	BPS425	BPS425	BPS425	BPS525	BPS625
2 1/2"	BPS425	BPS525	BPS525	BPS625	BPS825
3"	BPS525	BPS525	BPS625	BPS625	BPS825
3 1/2"	BPS525	BPS625	BPS625	BPS825	BPS825
4"	BPS625	BPS625	BPS825	BPS825	BPS825

All dimensions in charts and on drawings are in inches. Dimensions shown in parentheses are in millimeters unless otherwise specified.

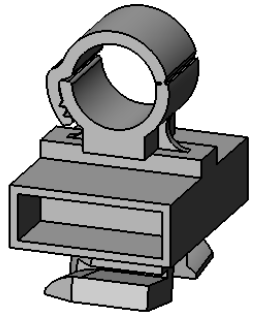

For 1 5/8"
Strut Channel
Width

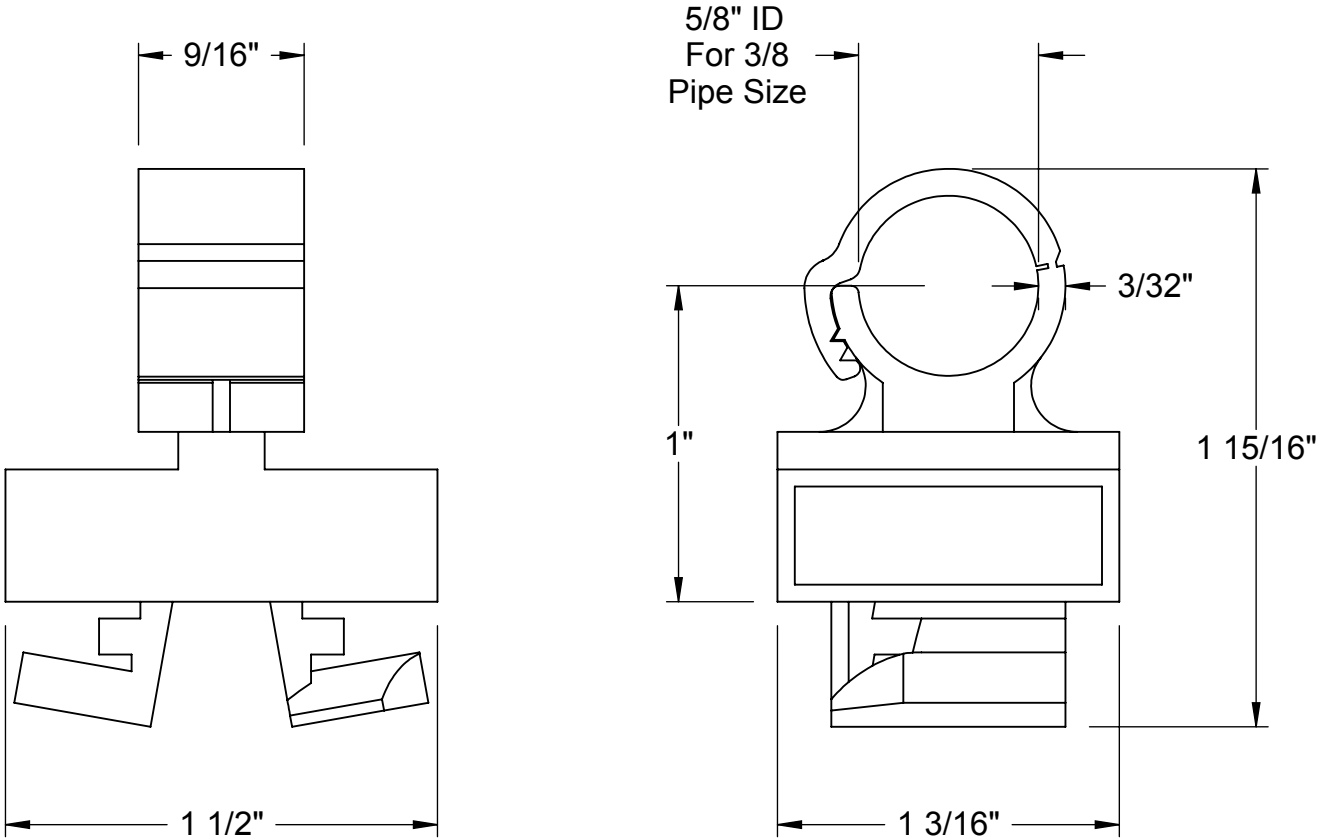

McMASTER-CARR® CAD	PART NUMBER	3656T83
http://www.mcmaster.com © 2016 McMaster-Carr Supply Company Information in this drawing is provided for reference only.	Strut-Mount Clamp for Insulated Tubing	

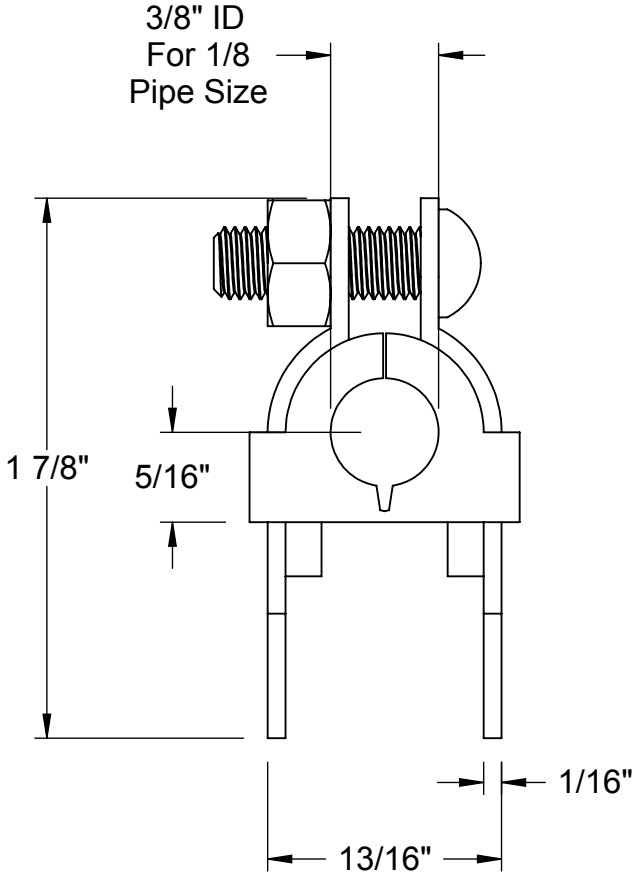

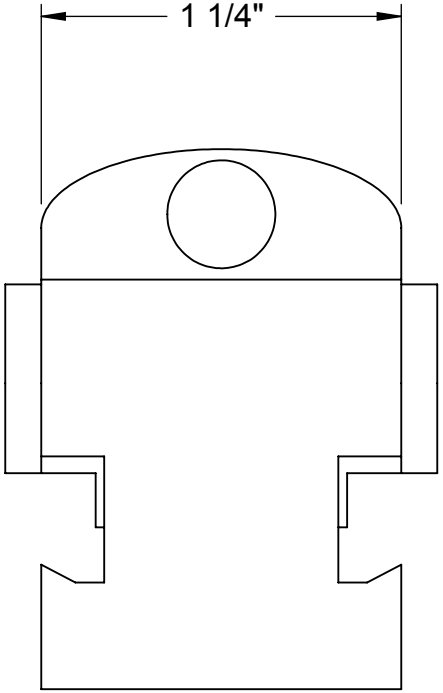

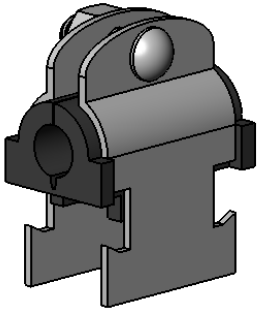

For 1 5/8"
Strut Channel
Width

McMASTER-CARR® CAD	PART NUMBER	32625T51
http://www.mcmaster.com © 2016 McMaster-Carr Supply Company Information in this drawing is provided for reference only.	Vibration-Damping Strut-Mount Clamp	

Product Information

HFC blend refrigerant

R-410A

R-410A is a blend refrigerant developed as a substitute for HCFC-22. It is a mixture of HFC-32 and HFC-125, and is a pseudo-azeotropic refrigerant. It requires liquid filling to prevent change in composition.

Its level of pressure is approximately 1.6 times higher than that of HCFC-22, achieving excellent heatpump performance. It is highly compatible with ester oil and ether oil (It is not compatible with mineral oils like naphthenic oil etc. which is normally used with HCFC-22). Its moisture solubility is slightly higher than that of HCFC-22.

It is mainly used as a refrigerant for air-conditioning systems (room air-conditioners and packaged air conditioners). It is also used as a refrigerant for freezing and refrigeration systems.

1. General properties

	R-410A	[Reference] HCFC-22
Components	HFC-32/125	—
Blend ratio	50/50	—
Boiling point (°C)	-51.5	-40.8
Saturated vapor pressure (MPa, 25°C)	1.65	1.04
Range of flammability (vol% in air)	Non-flammable	Non-flammable
Ozone depletion potential (ODP) *1	0	0.055
Global warming potential (GWP) *2 ( ) *3	2090 (1730)	1810 (1500)

*1 Based on December 1991 announcement by AFEAS.
*2 Integrated time of 100 years based on IPCC 4th Report 2007.
*3 Integrated time of 100 years based on IPCC 2nd Report 1995.

2. Handling method and safety information

R-410A is liquefied high-pressure gas. Read the Material Safety Data Sheet (MSDS) before use. Dangerous or hazardous reactions do not take place under normal conditions.

3. Packaging specifications

High-pressure gas rental cylinder	10 kg, 20 kg, 100 kg, 1 ton, etc.
Non-refillable cylinder	10 kg

DAIKIN INDUSTRIES, LTD.
Chemicals Division
Umeda Center Bldg.,
2-4-12, Nakazaki-Nishi, Kita-ku,
Osaka 530-8323, Japan
Phone: +81-6-6373-4342
Facsimile: +81-6-6373-4390
http://www.daikin.com/chm

DAIKIN AMERICA, INC.
20 Olympic Drive,
Orangeburg, NY 10962, USA
Phone: +1-845-365-9500
Toll-Free: +1-800-365-9570
Facsimile: +1-845-365-9598
http://www.daikin-america.com

DAIKIN CHEMICAL EUROPE GmbH
Immermannstr. 65D,
40210 Dusseldorf, Germany
Phone: +49-211-179225-0
Facsimile: +49-211-1640732
http://www.daikinchem.de

Sight Glass/ Moisture Indicators

Hermetically Sealed, Solder x Solder

Features:

- Maximum working pressure (PS): 700 psig, 48 bar
- Working temperature range (TS): -40°F/185°F, -40°C/85°C
- Compatible with all CFC, HCFC and HFC refrigerants and oils
- UL/cUL Recognized, CE Certified
- Solid Brass construction, hermetically sealed
- Designed for maximum flow and minimum pressure drop
- Large viewing window and indicator for better visibility
- Provides accurate identification of system conditions

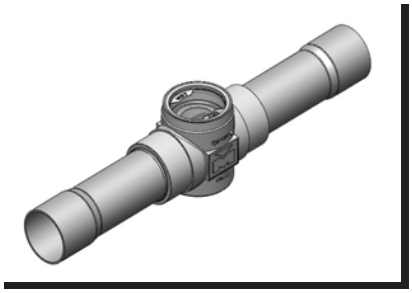

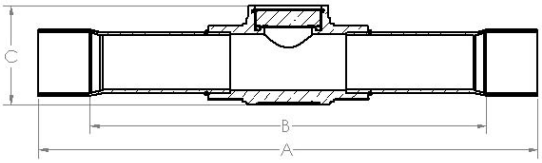

Moisture Content PPM				
HFC and HCFC Refrigerants	75°F Liquid Refrigerant		100°F Liquid Refrigerant	
	Green/Dry	Yellow/Wet	Green/Dry	Yellow/Wet
R404A	20	75	25	130
R407C	30	145	55	230
R507	15	75	30	140
R12	5	20	10	35
R22	30	125	45	185
R134a	25	110	45	175
R410a	25	165	45	300
R502	10	45	20	65

Dimensions

Part Number	Size	A (in)	B (in)	C (in)	Wt(lb)
A 18114	1/4	4.50	3.87	1.06	0.31
A 18115	3/8	4.50	3.71	1.06	0.38
A 18116	1/2	5.74	4.79	1.06	0.50
A 18117	5/8	5.74	4.56	1.3	0.52
A 18118	3/4	6.80	5.54	1.3	0.56
A 18119	7/8	7.16	5.69	1.42	0.41

Metric Dimensions

Part Number	Size	A (mm)	B (mm)	C (mm)	Wt(kg)
A 18114	6	114	98	27	0.14
A 18115	10	114	94	27	0.17
A 18116	13	146	122	27	0.22
A 18117	16	146	116	33	0.24
A 18118	19	173	141	33	0.25
A 18119	22	182	145	36	0.19

Sight Glass/ Moisture Indicators

Hermetically Sealed, Copper Body, Solder x Solder

Features:

- Maximum working pressure (PS): 700 psig, 48 bar
- Working temperature range (TS): -40°F/185°F, -40°C/85°C
- Compatible with all CFC, HCFC and HFC refrigerants and oils
- UL/cUL Recognized, CE Certified
- Designed for maximum flow and minimum pressure drop
- Large viewing window and indicator for better visibility
- Provides accurate identification of system conditions

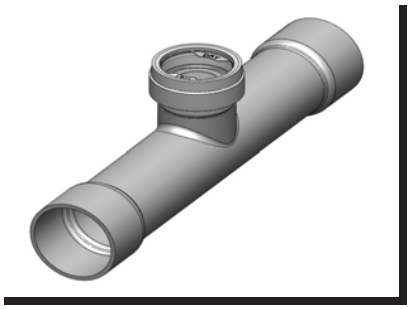

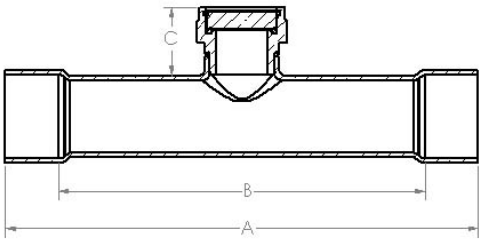

Moisture Content PPM				
HFC and HCFC Refrigerants	75°F Liquid Refrigerant		100°F Liquid Refrigerant	
	Green/Dry	Yellow/Wet	Green/Dry	Yellow/Wet
R404A	20	75	25	130
R407C	30	145	55	230
R507	15	75	30	140
R12	5	20	10	35
R22	30	125	45	185
R134a	25	110	45	175
R410a	25	165	45	300
R502	10	45	20	65

Dimensions

Part Number	Size	A (in)	B (in)	C (in)	Wt(lb)
A 18120	1 1/8	6.30	4.49	0.98	0.59
A 18121	1 3/8	7.87	5.95	0.98	0.75
A 18122	1 5/8	7.87	5.71	0.98	1.01
A 18123	2 1/8	7.87	5.2	0.98	1.40

Metric Dimensions

Part Number	Size	A (mm)	B (mm)	C (mm)	Wt(kg)
A 18120	29	160	114	25	0.27
A 18121	35	200	151	25	0.34
A 18122	41	200	145	25	0.46
A 18123	54	200	132	25	0.64

Sight Glass/ Moisture Indicators

Replaceable Element, Copper Body, Solder x Solder

Upcoming Release. Contact Factory for Details.

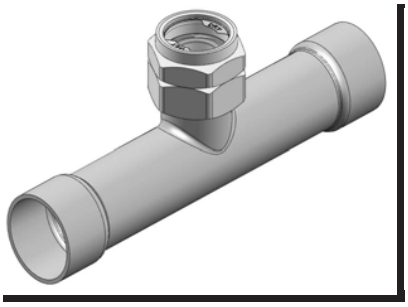

Features:

- Maximum working pressure (PS): 700 psig, 48 bar
- Working temperature range (TS): -40°F/185°F, -40°C/85°C
- Compatible with all CFC, HCFC and HFC refrigerants and oils
- UL/cUL Recognized, CE Certified
- Designed for maximum flow and minimum pressure drop
- Large viewing window and indicator for better visibility
- Provides accurate identification of system conditions

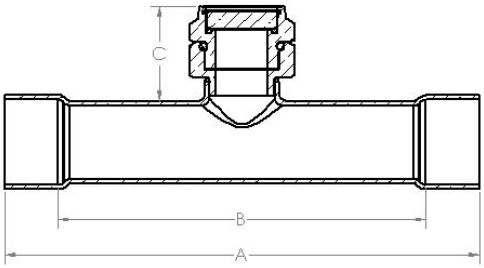

Moisture Content PPM				
HFC and HCFC Refrigerants	75°F Liquid Refrigerant		100°F Liquid Refrigerant	
	Green/Dry	Yellow/Wet	Green/Dry	Yellow/Wet
R404A	20	75	25	130
R407C	30	145	55	230
R507	15	75	30	140
R12	5	20	10	35
R22	30	125	45	185
R134a	25	110	45	175
R410a	25	165	45	300
R502	10	45	20	65

Dimensions

Part Number	Size	A (in)	B (in)	C (in)	Wt(lb)
A 18124	1 1/8	6.30	4.49	1.26	0.67
A 18125	1 3/8	7.87	5.95	1.26	0.67
A 18126	1 5/8	7.87	5.71	1.26	0.67
A 18127	2 1/8	7.87	5.2	1.26	0.67

Metric Dimensions

Part Number	Size	A (mm)	B (mm)	C (mm)	Wt(kg)
A 18124	29	160	114	32	0.30
A 18125	35	200	151	32	0.30
A 18126	41	200	145	32	0.30
A 18127	54	200	132	32	0.30

Sight Glass/ Moisture Indicators

Hermetically Sealed, Flare x Flare

Features:

- Maximum working pressure (PS): 700 psig, 48 bar
- Working temperature range (TS): -40°F/185°F, -40°C/85°C
- Compatible with all CFC, HCFC and HFC refrigerants and oils
- UL/cUL Recognized, CE Certified
- Solid Brass construction, hermetically sealed
- Designed for maximum flow and minimum pressure drop
- Large viewing window and indicator for better visibility
- Provides accurate identification of system conditions

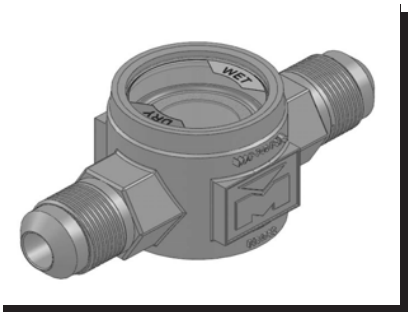

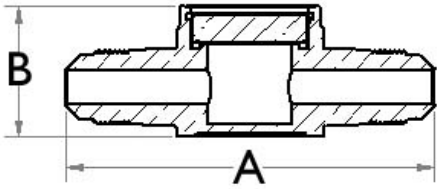

Moisture Content PPM				
HFC and HCFC Refrigerants	75°F Liquid Refrigerant		100°F Liquid Refrigerant	
	Green/Dry	Yellow/Wet	Green/Dry	Yellow/Wet
R404A	20	75	25	130
R407C	30	145	55	230
R507	15	75	30	140
R12	5	20	10	35
R22	30	125	45	185
R134a	25	110	45	175
R410a	25	165	45	300
R502	10	45	20	65

Dimensions

Part Number	Size	Thread	A (in)	B (in)	Wt(lb)
A 18101	1/4	7/16-20UNF	2.75	1.06	0.33
A 18102	3/8	5/8-18 UNF	3.00	1.06	0.38
A 18103	1/2	3/4-16 UNF	3.25	1.30	0.52
A 18104	5/8	7/8-14 UNF	3.45	1.30	0.54

Metric Dimensions

Part Number	Size	Thread	A (mm)	B (mm)	Wt(kg)
A 18101	6	7/16-20UNF	70	27	0.15
A 18102	10	5/8-18 UNF	76	27	0.17
A 18103	13	3/4-16 UNF	83	33	0.24
A 18104	16	7/8-14 UNF	88	33	0.24

Sight Glass/ Moisture Indicators

Hermetically Sealed, Flare x Swivel

Features:

- Maximum working pressure (PS): 700 psig, 48 bar
- Working temperature range (TS): -40°F/185°F, -40°C/85°C
- Compatible with all CFC, HCFC and HFC refrigerants and oils
- UL/cUL Recognized, CE Certified
- Solid Brass construction, hermetically sealed
- Designed for maximum flow and minimum pressure drop
- Large viewing window and indicator for better visibility
- Provides accurate identification of system conditions

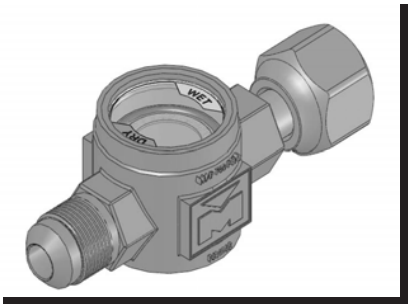

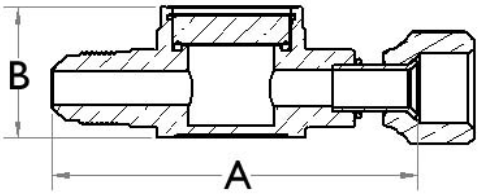

Moisture Content PPM				
HFC and HCFC Refrigerants	75°F Liquid Refrigerant		100°F Liquid Refrigerant	
	Green/Dry	Yellow/Wet	Green/Dry	Yellow/Wet
R404A	20	75	25	130
R407C	30	145	55	230
R507	15	75	30	140
R12	5	20	10	35
R22	30	125	45	185
R134a	25	110	45	175
R410a	25	165	45	300
R502	10	45	20	65

Dimensions

Part Number	Size	A (in)	B (in)	Wt(lb)
A 18110	1/4	2.90	1.06	0.35
A 18111	3/8	2.95	1.06	0.38
A 18112	1/2	3.37	1.30	0.56
A 18113	5/8	3.37	1.30	0.63

Metric Dimensions

Part Number	Size	A (mm)	B (mm)	Wt(kg)
A 18110	6	74	27	0.16
A 18111	10	75	27	0.17
A 18112	13	86	33	0.25
A 18113	16	86	33	0.29

Sight Glass/ Moisture Indicators

Hermetically Sealed, M x F Flare

Features:

- Maximum working pressure (PS): 700 psig, 48 bar
- Working temperature range (TS): -40°F/185°F, -40°C/85°C
- Compatible with all CFC, HCFC and HFC refrigerants and oils
- UL/cUL Recognized, CE Certified
- Solid Brass construction, hermetically sealed
- Designed for maximum flow and minimum pressure drop
- Large viewing window and indicator for better visibility
- Provides accurate identification of system conditions

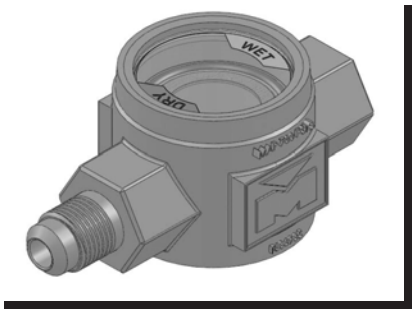

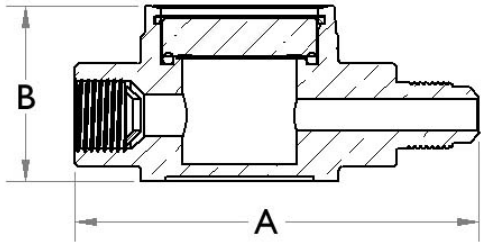

Moisture Content PPM				
HFC and HCFC Refrigerants	75°F Liquid Refrigerant		100°F Liquid Refrigerant	
	Green/Dry	Yellow/Wet	Green/Dry	Yellow/Wet
R404A	20	75	25	130
R407C	30	145	55	230
R507	15	75	30	140
R12	5	20	10	35
R22	30	125	45	185
R134a	25	110	45	175
R410a	25	165	45	300
R502	10	45	20	65

Dimensions

Part Number	Size	Thread	A (in)	B (in)	Wt(lb)
A 18106	1/4	7/16-20 UNF	2.45	1.06	0.32
A 18107	3/8	5/8-18 UNF	3.00	1.30	0.47
A 18108	1/2	3/4-16 UNF	2.85	1.30	0.47

Metric Dimensions

Part Number	Size	Thread	A (mm)	B (mm)	Wt(kg)
A 18106	6	7/16-20 UNF	62	27	0.15
A 18107	10	5/8-18 UNF	76	33	0.21
A 18108	13	3/4-16 UNF	72	33	0.21

CYCLEMASTER® Ball Valves

Standard

Features:

- Maximum working pressure (PS): 700 psig, 48 bar
- Working temperature range (TS): -40°F/300°F, -40°C/149°C
- Compatible with all CFC, HCFC and HFC refrigerants and oils
- Full port construction to match line size ID
- Internally equalized ball design
- Rupture-proof encapsulated stem
- MCM™ Seal Technology
- UL/cUL Listed, CE Certified

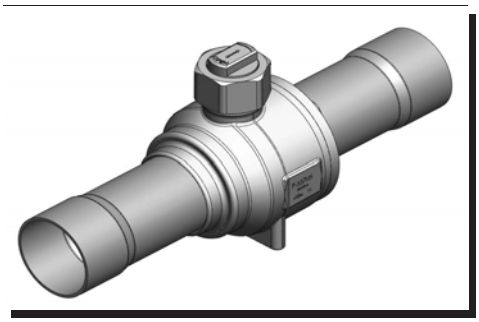

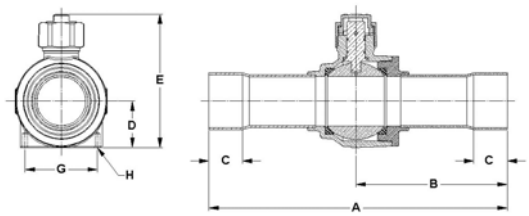

References

*	Reduced Port
**	Where Applicable
***	Consult Factory
‡	Standard product offering includes drilled/ tapped feature
Prefix AP	Drilled/ tapped

Dimensions

Part Number		Size	Cv	A (in)	B (in)	C (in) Min	D (in)	E (in)	G (in) **	H **	Port (in)	Wt(lb)	Seal Cap Kit
AP17859	‡	1/4	1.0	5.47	2.97	0.31	0.65	2.53	0.87	M4 X 0.7	0.50	0.67	A 17842
AP17860C	‡	3/8	4.3	5.50	3.00	0.31	0.65	2.53	0.87	M4 X 0.7	0.50	0.66	A 17842
AP17861C	‡	1/2	6.2	6.35	3.41	0.38	0.65	2.53	0.87	M4 X 0.7	0.50	0.68	A 17842
AP17862C	‡	5/8	12.1	6.35	3.41	0.5	0.65	2.53	0.87	M4 X 0.7	0.50	0.68	A 17842
AP17863	‡	3/4	19.0	7.45	3.89	0.62	0.88	3.08	1.18	M4 X 0.7	0.75	1.42	A 17843
AP17864C	‡	7/8	27.5	7.45	3.89	0.75	0.88	3.08	1.18	M4 X 0.7	0.75	1.43	A 17843
AP17865A	‡	1 1/8	54.0	8.42	4.21	0.91	1.00	3.28	1.50	M4 X 0.7	1.00	1.58	A 17843
A 17866		1 3/8	89.1	10.00	5.00	0.97	1.28	3.94	1.89	M6 X 1.0	1.25	3.26	A 17844
A 17867		1 5/8	114.0	11.00	5.50	1.09	1.42	4.58	2.17	M6 X 1.0	1.50	4.70	A 17845
A 17868		2 1/8	244.0	12.00	6.08	1.34	1.86	5.34	2.91	M6 X 1.0	2.00	8.02	A 17845
A 17869		2 5/8	401.0	13.50	6.80	1.47	2.22	6.25			2.45	13.40	A 17846
A 17870		3 1/8	553.0	16.00	8.00	1.66	2.69	7.07			3.00	21.31	A 17846
A 17871	*	2 5/8	230.0	12.00	6.08	1.47	1.86	5.34	2.91	M6 X 1.0	2.00	8.46	A 17845
A 17872	*	3 1/8	143.0	12.00	6.08	1.66	1.86	5.34	2.91	M6 X 1.0	2.00	9.12	A 17845
B 34909	***	3 5/8		13.10	6.50	1.91	2.69	7.07			3.00	22.80	A 17846
B 34910	***	4 1/8		14.50	7.20	2.16	2.69	7.07			3.00	21.00	A 17846

CYCLEMASTER® Ball Valves

Standard With Access Port

Features:

- Maximum working pressure (PS): 700 psig, 48 bar
- Working temperature range (TS): -40°F/300°F, -40°C/149°C
- Compatible with all CFC, HCFC and HFC refrigerants and oils
- Full port construction to match line size ID
- Internally equalized ball design
- Rupture-proof encapsulated stem
- MCM™ Seal Technology
- UL/cUL Listed, CE Certified

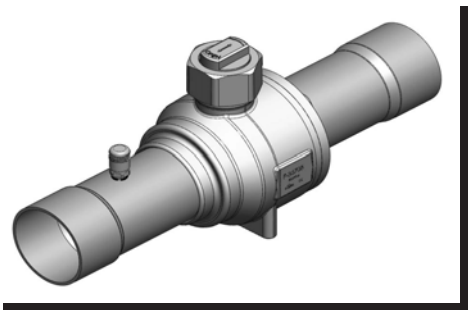

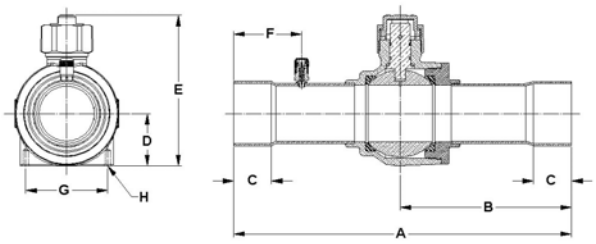

References

*	Reduced Port
**	Where Applicable
***	Consult Factory
‡	Standard product offering includes drilled/ tapped feature
Prefix AQ	Drilled/ tapped

Dimensions

Part Number		Size	Cv	A (in)	B (in)	C (in) Min	D (in)	E (in)	F (in)	G (in)**	H **	Port (in)	Wt(lb)	Seal Cap Kit
AQ17859	‡	1/4	1.00	5.47	2.97	0.31	0.65	2.53	1.16	0.87	M4 X 0.7	0.50	0.72	A 17842
AQ17860C	‡	3/8	4.30	5.50	3.00	0.31	0.65	2.53	1.16	0.87	M4 X 0.7	0.50	0.69	A 17842
AQ17861C	‡	1/2	6.20	6.35	3.41	0.38	0.65	2.53	1.21	0.87	M4 X 0.7	0.50	0.71	A 17842
AQ17862C	‡	5/8	12.10	6.35	3.41	0.50	0.65	2.53	1.35	0.87	M4 X 0.7	0.50	0.72	A 17842
AQ17863	‡	3/4	19.00	7.45	3.89	0.62	0.88	3.08	1.47	1.18	M4 X 0.7	0.75	1.43	A 17843
AQ17864C	‡	7/8	27.50	7.45	3.89	0.75	0.88	3.08	1.60	1.18	M4 X 0.7	0.75	1.46	A 17843
AQ17865A	‡	1 1/8	54.00	8.42	4.21	0.91	1.00	3.28	1.74	1.50	M4 X 0.7	1.00	1.56	A 17843
AC17866		1 3/8	89.10	10.00	5.00	0.97	1.28	3.94	2.04	1.89	M6 X 1.0	1.25	3.27	A 17844
AC17867		1 5/8	114.00	11.00	5.50	1.09	1.42	4.58	2.25	2.17	M6 X 1.0	1.50	4.78	A 17845
AC17868		2 1/8	244.00	12.00	6.08	1.34	1.86	5.34	2.41	2.91	M6 X 1.0	2.00	8.09	A 17845
AC17869		2 5/8	401.00	13.50	6.80	1.47	2.22	6.25	2.85			2.45	13.81	A 17846
AC17870		3 1/8	553.00	16.00	8.00	1.66	2.69	7.07	3.41			3.00	21.42	A 17846
AC17871	*	2 5/8	230.00	12.00	6.08	1.47	1.86	5.34	2.48	2.91	M6 X 1.0	2.00	8.71	A 17845
AC17872	*	3 1/8	143.00	12.00	6.08	1.66	1.86	5.34	2.66	2.91	M6 X 1.0	2.00	9.23	A 17845

CYCLEMASTER® Ball Valves

3-Way

Features:

- Maximum working pressure (PS): 700 psig, 48 bar
- Working temperature range (TS): -40°F/300°F, -40°C/149°C
- Compatible with all CFC, HCFC and HFC refrigerants and oils
- Full port construction to match line size ID
- Internally equalized ball design
- Rupture-proof encapsulated stem
- MCM™ Seal Technology
- UL/cUL Listed, CE Certified

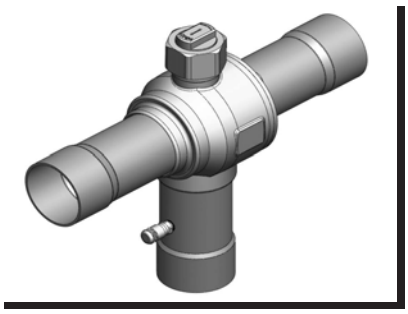

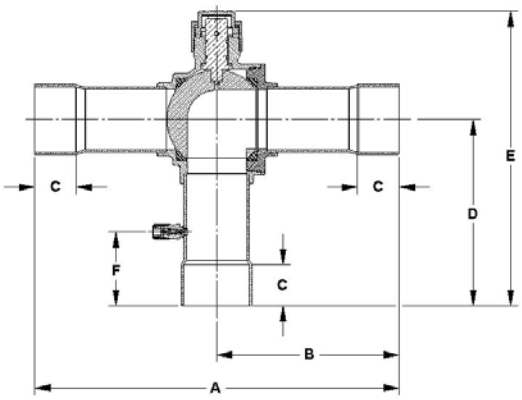

References

* Reduced Port

Dimensions

Part Number	Size	Cv	A (in)	B (in)	C (in)	D (in)	E (in)	F (in)	Port (in)	Wt(lb)	Seal Cap Kit
AU17860	3/8	2.2	5.50	2.97	0.31	2.61	4.16	1.16	0.50	0.73	A 17842
AU17861	1/2	3.9	6.38	3.42	0.38	3.05	4.60	1.21	0.50	0.74	A 17842
AU17862	5/8	4.6	6.38	3.42	0.50	3.05	4.60	1.35	0.50	0.74	A 17842
AU17863	3/4	11.9	7.47	3.91	0.62	3.65	5.86	1.47	0.75	1.40	A 17843
AU17864	7/8	10.9	7.47	3.91	0.75	3.65	5.86	1.60	0.75	1.52	A 17843
AU17865	1 1/8	19.3	8.41	4.33	0.91	4.01	6.39	1.74	1.00	2.82	A 17844
A 17545	1 3/8	31.1	10.00	5.07	0.97	4.92	7.89	2.04	1.25	4.97	A 17845
A 17546	1 5/8	44.7	11.00	5.53	1.09	5.46	8.61	2.25	1.50	7.17	A 17845
AU17868	2 1/8	76.3	11.86	5.95	1.34	6.06	9.58	2.41	1.93	8.27	A 17845
AU17871 *	2 5/8	69.9	11.90	5.97	1.47	6.08	9.60	2.48	1.93	8.80	A 17845
AU17872 *	3 1/8	58.2	11.86	5.95	1.66	6.06	9.58	2.66	1.93	11.10	A 17845

232300- 2.6 SOLENOID VALVES AS NEEDED

CYCLEMASTER® Ball Valves

Actuated Standard

Features:

- Maximum working pressure (PS): 700 psig, 48 bar
- Power Supply: 24 VAC
- Ambient Temperature: -22°F to 130°F, -30°C to 54°C
- Compatible with all CFC, HCFC and HFC refrigerants and oils
- Full shutoff capability
- Gradual open/close stops line hammer
- Remote operating capability
- Removable actuator for quick change replacement
- Manual override and valve positioning
- Electronic overload protection
- UL/cUL Listed, CE Certified

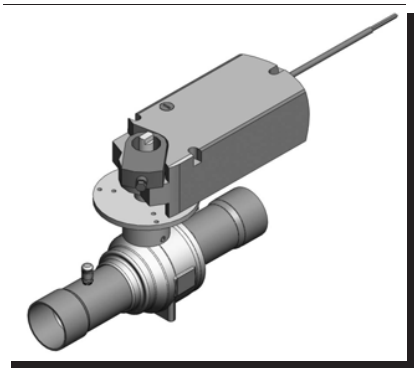

Motor Specifications

Motor Series	Torque (in-lb)	Power Consumption	Running Time (seconds)
1	44	2.5	90
2	132	3.0	125
3	310	7	125
4 **	620	16	125

References

*	Reduced Port
**	Consists of two stacked motors operating in tandem
Prefix AWS	Actuator includes auxillary switch
Warning	Heater assembly required for low temperature applications
Warning	Motors not for use in wet or applications where moisture will condense on motor

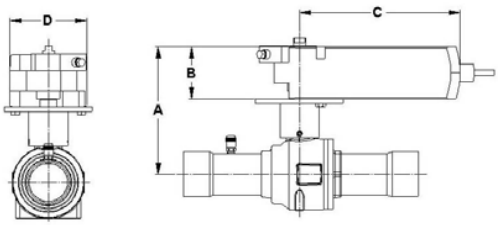

Dimensions

Part Number	Size (in)	Size (mm)	Cv	Kv	A (in)	A (mm)	B (in)	B (mm)	C (in)	C (mm)	D (in)	D (mm)	Wt (lb)	Wt (kg)	Motor	Hub	Act. Kit	Heater
AW17861	1/2	13	6.2	5.4	4.18	106	2.36	60	3.70	94	2.76	70	2.21	1.00	1	A 18389	A 18390	
AW17862	5/8	16	12.1	10.5	4.18	106	2.36	60	3.70	94	2.76	70	2.38	1.08	1	A 18389	A 18390	
AW17863	3/4	19	19.0	16.4	4.50	114	2.36	60	3.70	94	2.76	70	2.84	1.29	1	A 18391	A 18392	
AW17864	7/8	22	27.5	23.8	4.50	114	2.36	60	3.70	94	2.76	70	2.97	1.34	1	A 18391	A 18392	
AW17865A	1 1/8	29	54.0	46.7	4.58	116	2.36	60	3.70	94	2.76	70	3.07	1.39	1	A 18391	A 18392	
AW17866	1 3/8	35	89.1	77.1	5.19	132	2.36	60	5.91	150	3.19	81	6.14	2.79	2	A 18393	A 18394	A 18366
AW17867	1 5/8	41	114.0	98.6	5.92	150	2.36	60	5.91	150	3.19	81	7.74	3.51	2	A 18368	A 18396	A 18366
AW17868	2 1/8	54	244.0	211.0	6.54	166	2.66	68	8.94	227	3.94	100	13.14	5.96	3	A 18368	A 18395	A 18367
AW17869 **	2 5/8	67	401.0	346.8	9.64	245	5.32	135	8.94	227	3.94	100	23.40	10.61	4	A 18400	A 18401	A 18367 (2)
AW17870 **	3 1/8	79	553.0	478.3	9.99	254	5.32	135	8.94	227	3.94	100	31.40	14.24	4	A 18400	A 18401	A 18367 (2)
AW17871 *	2 5/8	67	230.0	198.9	6.54	166	2.66	68	8.94	227	3.94	100	13.56	6.15	3	A 18368	A 18395	A 18367
AW17872 *	3 1/8	79	143.0	123.7	6.54	166	2.66	68	8.94	227	3.94	100	14.24	6.46	3	A 18368	A 18395	A 18367

CYCLEMASTER® Ball Valves

Actuated 3-Way

Features:

- Maximum working pressure (PS): 700 psig, 48 bar
- Power Supply: 24 VAC
- Ambient Temperature: -22°F to 130°F, -30°C to 54°C
- Compatible with all CFC, HCFC and HFC refrigerants and oils
- Full shutoff capability
- Gradual open/close stops line hammer
- Remote operating capability
- Removable actuator for quick change replacement
- Manual override and valve positioning
- Electronic overload protection
- UL/cUL Listed, CE Certified

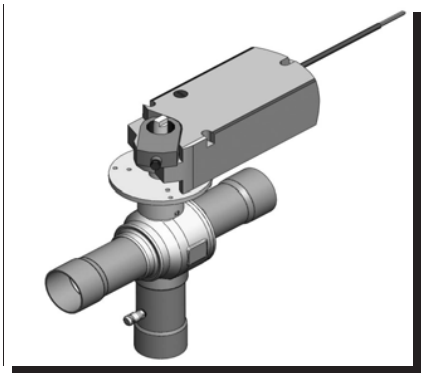

Motor Specifications

Motor Series	Torque (in-lb)	Power Consumption	Running Time (seconds)
1	44	2.5	90
2	132	3.0	125
3	310	7	125
4 **	620	16	125

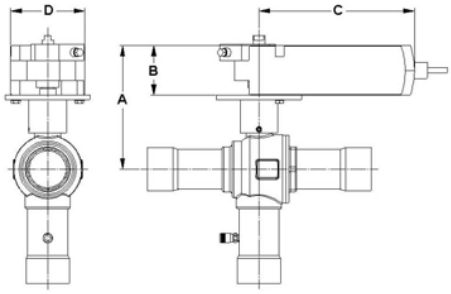

References

*	Reduced Port
**	Consists of two stacked motors operating in tandem
Prefix AYS	Actuator includes auxillary switch
Warning	Heater assembly required for low temperature applications
Warning	Motors not for use in wet or applications where moisture will condense on motor

Dimensions

Part Number	Size (in)	Size (mm)	Cv	Kv	A (in)	A (mm)	B (in)	B (mm)	C (in)	C (mm)	D (in)	D (mm)	Wt (lb)	Wt (kg)	Motor	Hub	Act. Kit	Heater
AY17861	1/2	13	3.9	3.4	4.18	106	2.36	60	3.70	94	2.76	70	0.00	0.00	1	A 18389	A 18390	
AY17862	5/8	16	4.6	4.0	4.18	106	2.36	60	3.70	94	2.76	70	2.39	1.08	1	A 18389	A 18390	
AY17863	3/4	19	11.9	10.3	4.50	114	2.36	60	3.70	94	2.76	70	3.50	1.59	1	A 18391	A 18392	
AY17864	7/8	22	10.9	9.4	4.50	114	2.36	60	3.70	94	2.76	70	3.25	1.47	1	A 18391	A 18392	
AY17865	1 1/8	29	19.3	16.7	5.02	128	2.36	60	5.91	150	3.19	81	5.73	2.60	2	A 18393	A 18394	A 18366
A 17810	1 3/8	35	31.1	26.9	5.44	138	2.36	60	5.91	150	3.19	81	8.13	3.69	2	A 18368	A 18396	A 18366
A 17811	1 5/8	41	44.7	38.7	6.22	158	2.66	68	8.94	227	3.94	100	12.00	5.44	3	A 18368	A 18395	A 18367
AY17868	2 1/8	54	76.3	66.0	6.54	166	2.66	68	8.94	227	3.94	100	13.23	6.00	3	A 18368	A 18395	A 18367
AY17871 *	2 5/8	67	69.9	60.5	6.54	166	2.66	68	8.94	227	3.94	100	14.09	6.39	3	A 18368	A 18395	A 18367
AY17872 *	3 1/8	79	58.2	50.3	6.54	166	2.66	68	8.94	227	3.94	100	14.64	6.64	3	A 18368	A 18395	A 18367

Multi Split Ball Valves

Flare x ODS

Features:

- Maximum working pressure (PS): 700 psig, 48 bar
- Working temperature range (TS): -40°F/300°F, -40°C/149°C
- Compatible with all CFC, HCFC and HFC refrigerants and oils, including R410a
- Full port construction to match line size ID
- Internally equalized ball design
- Rupture-proof encapsulated stem
- MCM™ Seal Technology
- UL/cUL Listed, CE Certified

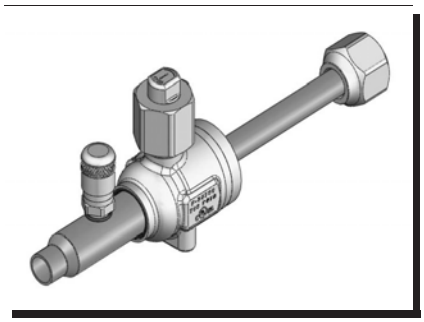

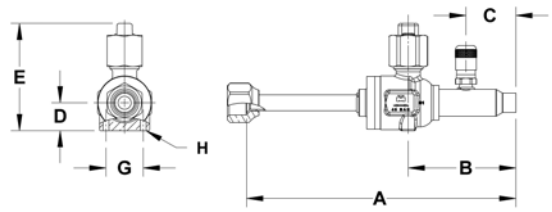

Drawing A

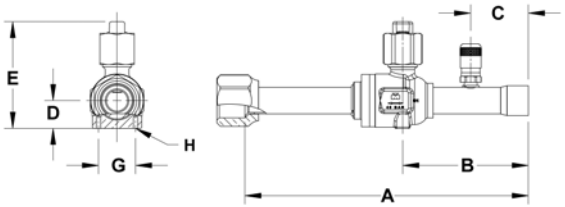

Drawing B

Dimensions

Part Number	Size	A (in)	B (in)	C (in)	D (in)	E (in)	G (in)	H	Wt(lb)	Drawing
A 18448	1/4	6.38	2.50	1.16	0.65	2.53	0.87	M4 X 0.7	0.74	A
A 18405	3/8	6.26	2.50	1.16	0.65	2.53	0.87	M4 X 0.7	0.67	A
A 18449	1/2	6.71	2.94	1.21	0.65	2.53	0.87	M4 X 0.7	0.78	A
A 18406	5/8	6.64	2.94	1.35	0.65	2.53	0.87	M4 X 0.7	0.73	B

Metric Dimensions

Part Number	Size	A (mm)	B (mm)	C (mm)	D (mm)	E (mm)	G (mm)	H	Wt(kg)	Drawing
A 18448	6	162	64	29	17	64	22	M4 X 0.7	0.34	A
A 18405	10	159	64	29	17	64	22	M4 X 0.7	0.30	A
A 18449	13	170	75	31	17	64	22	M4 X 0.7	0.35	A
A 18406	16	169	75	34	17	64	22	M4 X 0.7	0.33	B

Multi Split Ball Valves

Male x Female Flare

Features:

- Maximum working pressure (PS): 700 psig, 48 bar
- Working temperature range (TS): -40°F/300°F, -40°C/149°C
- Compatible with all CFC, HCFC and HFC refrigerants and oils, including R410a
- Full port construction to match line size ID
- Internally equalized ball design
- Rupture-proof encapsulated stem
- MCM™ Seal Technology
- UL/cUL Listed, CE Certified

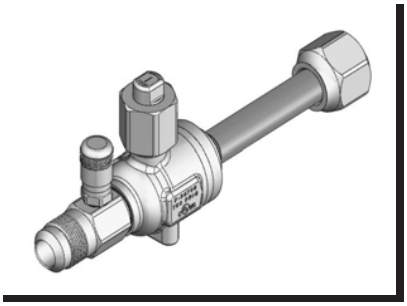

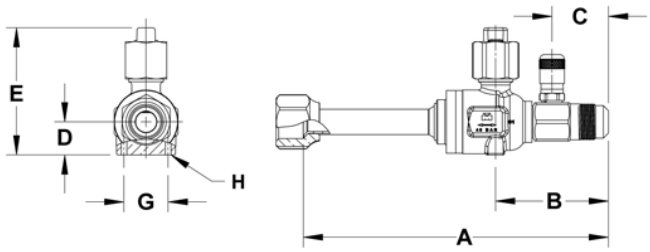

Dimensions

Part Number	Size	A (in)	B (in)	C (in)	D (in)	E (in)	G (in)	H	Wt(lb)
A 18450	1/4	5.86	1.98	0.88	0.65	2.53	0.87	M4 X 0.7	0.75
A 18429	3/8	5.86	2.10	1.00	0.65	2.53	0.87	M4 X 0.7	0.82
A 18451	1/2	5.98	2.21	1.11	0.65	2.53	0.87	M4 X 0.7	0.78
A 18430	5/8	5.98	2.28	1.15	0.65	2.53	0.87	M4 X 0.7	0.86
A 18452	3/8 X 1/4	5.74	1.98	0.88	0.65	2.53	0.87	M4 X 0.7	0.79
A 18453	5/8 X 1/2	5.91	2.21	1.11	0.65	2.53	0.87	M4 X 0.7	0.81

Metric Dimensions

Part Number	Size	A (mm)	B (mm)	C (mm)	D (mm)	E (mm)	G (mm)	H	Wt(kg)
A 18450	1/4	149	50	22	17	64	22	M4 X 0.7	0.34
A 18429	3/8	149	53	25	17	64	22	M4 X 0.7	0.37
A 18451	1/2	152	56	28	17	64	22	M4 X 0.7	0.36
A 18430	5/8	152	58	29	17	64	22	M4 X 0.7	0.39
A 18452	3/8 X 1/4	146	50	22	17	64	22	M4 X 0.7	0.36
A 18453	5/8 X 1/2	150	56	28	17	64	22	M4 X 0.7	0.37

Specialty WOG Ball Valves

Oil Drain

Features:

- Maximum working pressure (PS): 700 psig, 48 bar
- Working temperature range (TS): -40°F/300°F, -40°C/149°C
- Brass and stainless steel construction
- Compatible with most fluids
- Quarter turn operation for positive shutoff
- Designed for maximum flow and minimum pressure drop

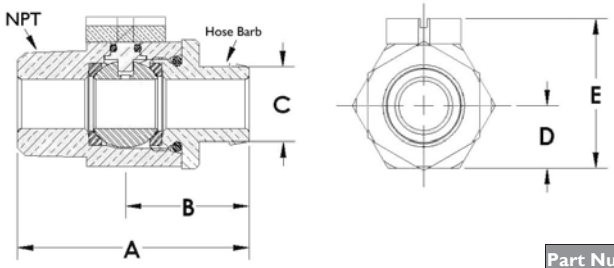

Dimensions

Part Number	Size NPT	A (in)	B (in)	C (in) Min	D (in)	E (in)	Wt(lb)
AA18060C	3/4	2.34	1.25	0.75	0.63	1.50	0.54

Metric Dimensions

Part Number	Size NPT	A (mm)	B (mm)	C (mm)	D (mm)	E (mm)	Wt(kg)
AA18060C	19	59	32	19	16	38	0.24

Component Parts

Retrofit Cap

Features:

- Designed to replace existing caps on installed valves for the full range of CYCLEMASTER® Ball Valve sizes 1/4" to 3 1/8"
- Large nut secures cap assembly to valve neck allowing center post to easily turn for on/off operation and clear visual identification
- Uses dual o-ring stem seals and base seal to assure positive isolation

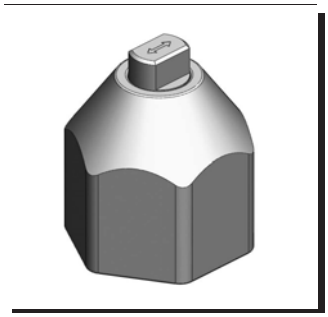

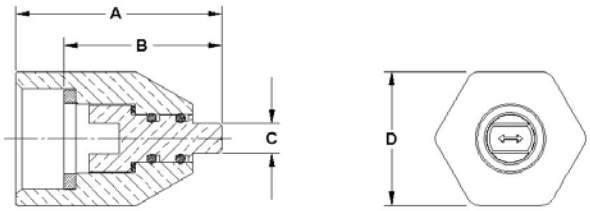

References

*	For use with 3-Way Ball Valve manufactured prior to Nov. 2006
**	For use with 1 1/8 Straight valves manufactured after Jun 2010

Dimensions

Part Number	Straight Ball Valve Sizes (in)	3-Way Ball Valve Sizes (in)	A (in)	B (in)	C (in)	D (in)	Sealing Torque (ft-lb)	Thread Size	Wt(lb)
A 18351	1/4 - 5/8	1/4 - 5/8	1.31	1.02	0.16	0.88	5 - 6	11/16" - 16UN	0.14
A 18352 **	3/4 - 1 1/8	3/4 - 7/8	1.54	1.12	0.22	1.00	5 - 6	13/16" - 16UN	0.22
A 18353	1 1/8 - 1 3/8	1 1/8	1.95	1.59	0.31	1.13	13 - 15	1" - 16UN	0.35
A 18354	1 5/8 - 2 1/8, 2 5/8 & 3 1/8" Red Port	1 3/8 - 2 1/8, 2 5/8 & 3 1/8" Red Port	2.57	1.97	0.38	1.63	16 - 18	1 1/2" - 16 UN	0.92
A 18355 *	2 5/8 & 3 1/8 Full Port	2 1/8 - 3 1/8	2.66	2.10	0.38	1.88	30 - 35	1 3/4" - 16 UN	1.35

Metric Dimensions

Part Number	Straight Ball Valve Sizes (mm)	3-Way Ball Valve Sizes (mm)	A (mm)	B (mm)	C (mm)	D (mm)	Sealing Torque (N-m)	Thread Size	Wt(kg)
A 18351	6 - 16	6 - 16	33	26	4	22	7 - 8	11/16" - 16UN	0.06
A 18352 **	19 - 29	19 - 22	39	28	6	25	7 - 8	13/16" - 16UN	0.10
A 18353	29 - 35	29	50	40	8	29	18 - 20	1" - 16UN	0.16
A 18354	41 - 54, 67 & 79 Red Port	32 - 54, 67 & 79 Red Port	65	50	10	41	22 - 24	1 1/2" - 16 UN	0.42
A 18355 *	67 & 79 Full Port	54 - 79	68	53	10	48	41 - 48	1 3/4" - 16 UN	0.61

Caps and Actuator Components

Stem Neck Thread Size	Connection Size	Straight Through Valve Body Numbers	3 Way Valve Body Numbers	Motor Series	ABV Hub Kit	ABV Hub Motor Kit	Heater	One Piece Plastic Cap	One Piece Brass Cap	Two Piece Brass Cap	Retrofit Brass Cap
11/16"-16 UN	1/4"	N 2351		1	A 18389	A 18390		P 36723	A 17965	A 17842	A 18351
	3/8"	F 35222	F 35222								
	1/2"	F 36700									
	5/8"	F 36700A									
13/16"-16 UN	3/4"	N 2352	F 35223	1	A 18391	A 18392		P 36762	A 17966	A 17843	A 18352
	7/8"	F 35223									
	1-1/8"	F 36702A									
1"-16 UN	1-1/8"	N 2353 F 35224 F 36702	F 35224	2	A 18393	A 18394	A 18366	P 36763	A 17967	A 17844	A 18353
	1-3/8"	F 35949 F 36703 F 36703A									
	1-5/8"	F 36704A									
1-1/2"-16 UN	1-3/8"	N 2354	F 35162	2	A 18368	A 18396	A 18366	P 36764	A 17968	A 17845	A 18354
	1-5/8"	N 2355 F 35950 F 36704									
			F 35160	3	A 18368	A 18395	A 18367				
	2-1/8" 2-5/8" & 3-1/8" Reduced Port	F 35951 F 36705 F 36705A	F 36595								
	2-5/8" Full Port	F 36706A		4			(2) A 18367				
	3-1/8" Full Port 3-5/8" & 4-1/8" Reduced Port	F 36707A									
1-3/4"-16 UN	2-1/8" 2-5/8" & 3-1/8" Reduced Port	N 2356	F 35161	3	A 18402		A 18367	P 36765	A 18399	A 17846	A 18355
	2-5/8" Full Port	F 35755 F 36706		4	A 18400	A 18401	(2) A 18367				
	3-1/8" Full Port 3-5/8" & 4-1/8" Reduced Port	F 35952 F 36707									

Insulation Cover

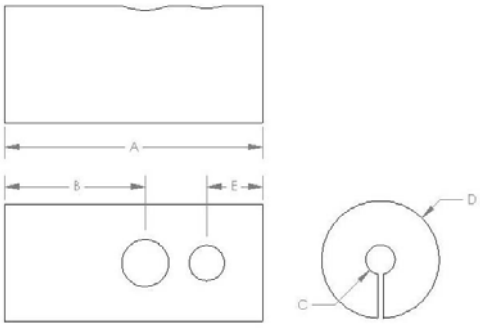

Part Number	Valve Size	A (in)	B (in)	C (in)	D (in)	E (in)	Wt(lb)
38RBVINS	3/8	5.50	3.00	0.63	2.50	1.19	0.10
12RBVINS	1/2	6.38	3.44	0.63	2.50	1.19	0.10
58RBVINS	5/8	6.38	3.44	0.63	2.50	1.38	0.10
34RBVINS	3/4	7.44	3.88	0.88	3.06	1.63	0.10
78RBVINS	7/8	7.44	3.88	0.88	3.06	1.63	0.10
118RBVINS	1 1/8	8.44	4.31	1.13	3.63	1.75	0.10
138RBVINS	1 3/8	10.00	5.00	1.25	3.94	2.06	0.10
158RBVINS	1 5/8	11.00	5.50	1.44	4.56	2.25	0.10
218RBVINS	2 1/8	12.00	6.06	1.88	5.38	2.44	0.10
258RBVINS	2 5/8	13.50	6.81	2.25	6.25	2.88	0.10
MSBVINS	Multi Split Valves	8.56	6.00	1.13	2.63	1.47	0.10

232300 - 2.8 - FLEXIBLE CONNECTORS

MODEL RAF
REFRIGERATION VIBRATION ABSORBER

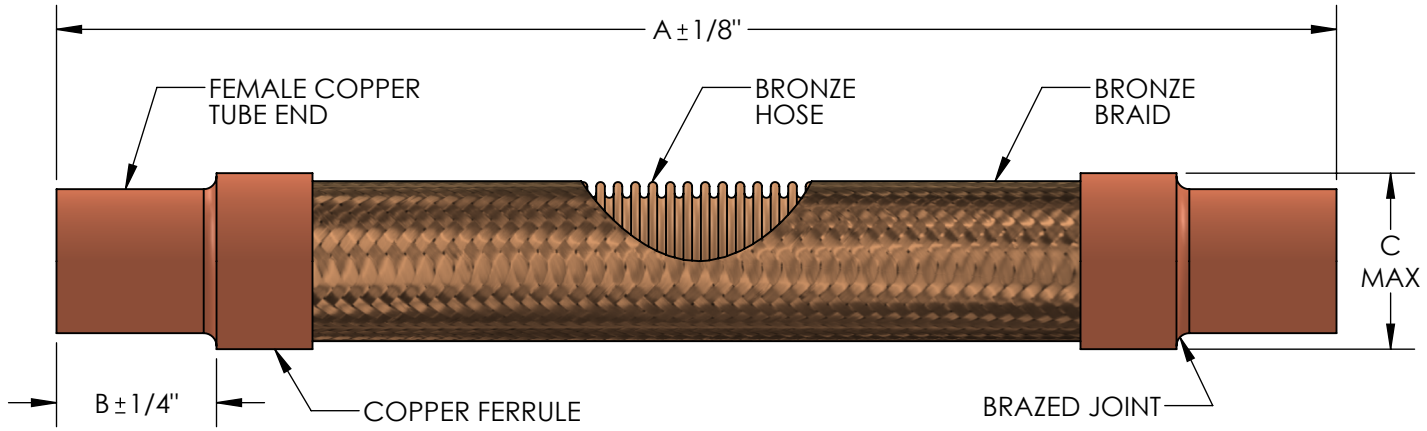

TESTED AND RECOGNIZED BY UNDERWRITERS LABORATORIES, INC.
INTERNALLY CLEANED AND DEHYDRATED - PACKED IN SEALED POLY BAG.
SIZES FROM 2-1/2" USE STAINLESS STEEL HOSE AND BRAID TO ASSURE HIGH PRESSURES.
THE ID OF COPPER TUBE MEETS ASA STANDARD B16.18-1950 AND ASA B16.22-1951.

QTY	PART NUMBER	PIPE SIZE		NOMINAL HOSE SIZE	A	B	C MAX	PRESSURE RATING (PSI)*	WEIGHT (LBS)	PROJECT INFORMATION
		NOMINAL	ACTUAL							
	RAF-2	1/8"	1/4"	1/4"	7-1/2"	1/2"	0.672"	450	0.2	
	RAF-3	1/4"	3/8"	5/16"	8-1/4"	5/8"	0.766"	450	0.3	
	RAF-4	3/8"	1/2"	3/8"	9"	3/4"	0.859"	450	0.3	
	RAF-5	1/2"	5/8"	1/2"	9-3/4"	7/8"	1.031"	450	0.4	
	RAF-6	5/8"	3/4"	1/2"	10"	1"	1.031"	450	0.4	
	RAF-7	5/8"	3/4"	3/4"	11-1/4"	1-1/8"	1.406"	440	0.8	
	RAF-8	3/4"	7/8"	3/4"	11-1/2"	1-1/4"	1.406"	440	0.8	
	RAF-9	1"	1-1/8"	1"	13"	1-1/2"	1.781"	400	1.3	
	RAF-10	1-1/4"	1-3/8"	1-1/4"	14-3/4"	1-5/8"	2.109"	480	2.1	
	RAF-11	1-1/2"	1-5/8"	1-1/2"	17"	2"	2.438"	420	3.0	
	RAF-12	2"	2-1/8"	2"	20"	2-1/2"	3.078"	190	4.1	
	RAF-13	2-1/2"	2-5/8"	2-1/2"	24"	2-29/32"	3.969"	320	5.4	
	RAF-14	3"	3-1/8"	3"	27"	3-13/32"	4.422"	302	7.4	
	RAF-15	3-1/2"	3-5/8"	3-1/2"	32"	3-29/32"	5.000"	168	9.3	
	RAF-16	4"	4-1/8"	4"	33"	4-13/32"	5.406"	168	12.4	

*FOR SAFE WORKING PRESSURE ABOVE 70°F, MULTIPLY THE PRESSURE SHOWN AT 70°F TIMES THE CORRECTION FACTOR OF THE REQUIRED TEMPERATURE.

TEMPERATURE (°F)	FACTOR
70	1.0
150	.92
200	.89
250	.86
300	.83
350	.81
400	.78
450	.75

NSF 372 - LEAD FREE
The wetted surface of this product contacted by consumable water contains less than one quarter of one percent (0.25%) of lead by weight. Material complies with state codes and standards, where applicable, requiring reduced lead content.

CUSTOMER:_____

PROJECT:_____

ENGINEER:_____

REV. 1	LAYOUT UPDATED DATE 12/28/2016

Metraflex® for pipes in motion

2323 W. HUBBARD ST.
CHICAGO, IL 60612
TEL: 312-738-3800
FAX: 312-738-0415
WWW.METRAFLEX.COM

MODEL RAF
FLEXIBLE REFRIGERATION VIBRATION ABSORBER

DRAWN BY: **DKISH**	DATE: **1/10/2014**
APPROVED: **JC**	DATE: **1/10/2014**
SCALE: N/A	DRAWING NUMBER: RAF-1

232300 NOT IN SPEC BUT NEEDED

DRYMASTER® Filter Driers

Liquid Line Flare

Features:

- Maximum working pressure (PS): 667 psig
- Maximum working temperature: 160°F/70°C
- Compatible with all CFC, HCFC and HFC refrigerants and oils, and refrigerants requiring XHII desiccant
- UL/cUL Listed, CE Certified
- Solid core design, composed of 80% molecular sieves / 20% activated alumina for exceptional moisture and acid removal
- High retention filter for removal of particulate as small as 25 microns
- High pressure shell and connections
- Powder paint finish approved for marine applications

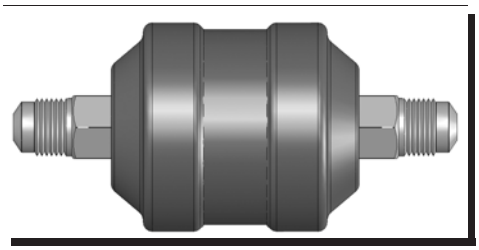

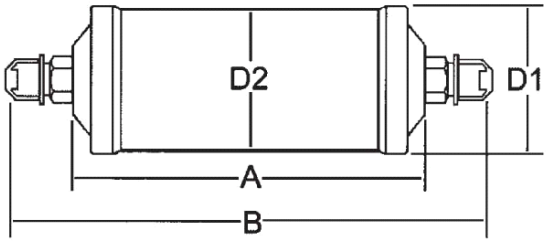

Dimensions

Part Number	Model	Dessicant Cu In	Size (in)	A (in)	B (in)	D1 (in)	D2 (in)	Wt (lb)	Liquid Capacity (tons)			Water Capacity (drops)					
									R134a	R404A, R507	R22, R407C, R410A	R134a, R507		R404A		R22, R407C, R410A	
												75°F	125°	75°F	125°	75°F	125°
A 16600	FL-032	3	1/4	2.60	4.33	1.81	1.69	0.48	2	1	2	106	97	171	90	99	90
A 16601	FL-033	3	3/8	2.60	4.84	1.81	1.69	0.56	5	4	5	106	97	171	90	99	90
A 16606	FL-052	5	1/4	2.95	4.69	2.28	2.13	0.78	2	1	2	128	115	207	108	117	108
A 16607	FL-053	5	3/8	2.95	5.20	2.28	2.13	0.87	5	4	5	128	115	207	108	117	108
A 16608	FL-082	8	1/4	3.98	5.71	2.28	2.13	1.01	2	1	2	195	186	319	166	189	180
A 16609	FL-083	8	3/8	3.98	6.22	2.28	2.13	1.08	5	4	6	195	186	319	166	189	180
A 16610	FL-084	8	1/2	3.98	6.54	2.28	2.13	1.15	7	6	8	195	186	319	166	189	180
A 16612	FL-162	16	1/4	4.33	6.06	3.15	2.99	1.88	2	1	2	460	429	723	395	427	395
A 16613	FL-163	16	3/8	4.33	6.57	3.15	2.99	2.04	6	5	7	460	429	723	395	427	395
A 16614	FL-164	16	1/2	4.33	6.89	3.15	2.99	2.10	9	6	9	460	429	723	395	427	395
A 16615	FL-165	16	5/8	4.33	7.24	3.15	2.99	2.21	12	9	13	460	429	723	395	427	395
A 16618	FL-303	30	3/8	7.32	9.57	3.15	2.99	3.33	6	4	7	920	858	1518	808	871	808
A 16619	FL-304	30	1/2	7.32	9.88	3.15	2.99	3.40	9	6	10	920	858	1518	808	871	808
A 16620	FL-305	30	5/8	7.32	10.24	3.15	2.99	3.50	13	9	14	920	858	1518	808	871	808
A 16623	FL-413	41	3/8	7.36	9.61	3.66	3.50	3.93	7	5	8	1274	1194	2102	1123	1203	1105
A 16624	FL-414	41	1/2	7.36	9.92	3.66	3.50	3.73	9	7	10	1274	1194	2102	1123	1203	1105
A 16625	FL-415	41	5/8	7.36	10.28	3.66	3.50	3.84	15	11	16	1274	1194	2102	1123	1203	1105

DRYMASTER® Filter Driers

Liquid Line Solder

Features:

- Maximum working pressure (PS): 667 psig
- Maximum working temperature: 160°F/70°C
- Compatible with all CFC, HCFC and HFC refrigerants and oils, and refrigerants requiring XHII desiccant
- UL/cUL Listed, CE Certified
- Solid core design, composed of 80% molecular sieves / 20% activated alumina for exceptional moisture and acid removal
- High retention filter for removal of particulate as small as 25 microns
- High pressure shell and connections
- Powder paint finish approved for marine applications

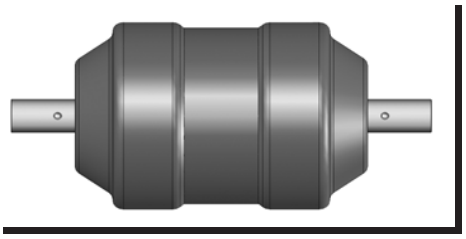

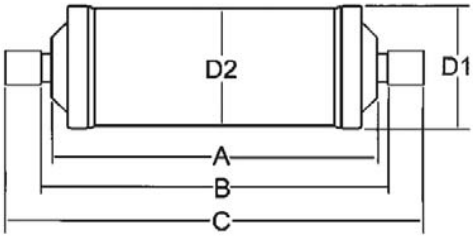

Dimensions

Part Number	Model	Dessicant Cu In	Size (in)	A (in)	B (in)	C (in)	D1 (in)	D2 (in)	Wt (lb)	Liquid Capacity (tons)			Water Capacity (drops)					
										R134a	R404A, R507	R22, R407C, R410A	R134a, R507		R404A		R22, R407C, R410A	
													75°F	125°	75°F	125°	75°F	125°
A 16640	SD-032	3	1/4	2.60	3.31		1.81	1.69	0.43	2	1	2	106	97	171	90	99	90
A 16641	SD-033	3	3/8	2.60	3.39		1.81	1.69	0.48	5	4	5	106	97	171	90	99	90
A 16646	SD-052	5	1/4	2.95	3.66		2.28	2.13	0.74	2	1	2	128	115	207	108	117	108
A 16647	SD-053	5	3/8	2.95	3.74		2.28	2.13	0.78	5	4	5	128	115	207	108	117	108
A 16648	SD-082	8	1/4	3.98	4.39		2.28	2.13	0.96	2	1	2	195	186	319	166	189	180
A 16649	SD-083	8	3/8	3.98	4.76		2.28	2.13	1.01	5	4	6	195	186	319	166	189	180
A 16650	SD-084	8	1/2	3.98	4.84		2.28	2.13	1.02	7	6	8	195	186	319	166	189	180
A 16653	SD-163	16	3/8	4.33	5.12		3.15	2.99	1.88	6	5	7	460	429	723	395	427	395
A 16654	SD-164	16	1/2	4.33	5.20		3.15	2.99	1.89	9	6	9	460	429	723	395	427	395
A 16655	SD-165	16	5/8	4.33	5.35		3.15	2.99	1.88	12	9	13	460	429	723	395	427	395
A 16657	SD-166	16	3/4	4.33	5.35		3.15	2.99	1.97	13	9	14	460	429	723	395	427	395
A 16656	SD-167	16	7/8	4.33	5.35		3.15	2.99	2.06	13	9	14	460	429	723	395	427	395
A 16658	SD-303	30	3/8	7.32	8.11		3.15	2.99	3.28	6	4	7	920	858	1518	808	871	808
A 16659	SD-304	30	1/2	7.32	8.19		3.15	2.99	3.23	9	6	10	920	858	1518	808	871	808
A 16660	SD-305	30	5/8	7.32	8.35		3.15	2.99	3.27	13	9	14	920	858	1518	808	871	808
A 16662	SD-307	30	7/8	7.32	8.35		3.15	2.99	3.51	18	13	19	920	858	1518	808	871	808
A 16661	SD-309	30	1 1/8	7.32	7.72		3.15	2.99	3.30	18	13	19	920	858	1518	808	871	808
A 16663	SD-413	41	3/8	7.36	8.23		3.66	3.50	3.86	7	5	8	1274	1194	2102	1123	1203	1105
A 16664	SD-414	41	1/2	7.36	8.23		3.66	3.50	3.58	9	7	10	1274	1194	2102	1123	1203	1105
A 16665	SD-415	41	5/8	7.36	8.39		3.66	3.50	3.61	15	11	16	1274	1194	2102	1123	1203	1105
A 16667	SD-417	41	7/8	7.36	8.39		3.66	3.50	3.76	26	18	28	1274	1194	2102	1123	1203	1105

DRYMASTER® Filter Driers

Suction Line Flare

Features:

- Maximum working pressure (PS): 508
- Maximum working temperature: 160°F/70°C
- Compatible with all CFC, HCFC and HFC refrigerants and oils, and refrigerants requiring XHII desiccant
- UL/cUL Listed, CE Certified
- Solid core design, composed of 70% activated alumina/ 30% molecular sieves for exceptional moisture and acid removal
- High retention filter for removal of particulate as small as 25 microns
- High pressure shell and connections
- Powder paint finish approved for marine applications

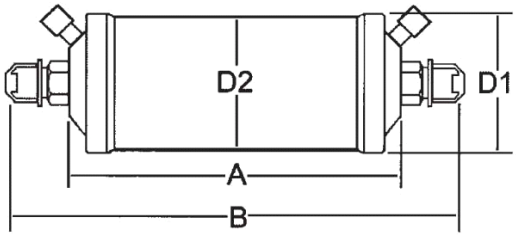

Dimensions

Part Number	Model	Dessicant Cu In	Size (in)	A (in)	B (in)	D1 (in)	D2 (in)	Wt (lb)	Nominal Capacity (tons) Evaporator Temp 40°F		
									R134a	R404A, R507	R22, R407C, R410A
A 17225	FDF-164-TT	16	1/2	4.3	6.9	3.1	3	2.14	1.7	2.4	3.0
A 17226	FDF-165-TT	16	5/8	4.3	7.2	3.1	3	2.24	2.7	3.7	4.3

DRYMASTER® Filter Driers

Suction Line Solder

Features:

- Maximum working pressure (PS): 508
- Maximum working temperature: 160°F/70°C
- Compatible with all CFC, HCFC and HFC refrigerants and oils, and refrigerants requiring XHII desiccant
- UL/cUL Listed, CE Certified
- Solid core design, composed of 70% activated alumina/ 30% molecular sieves for exceptional moisture and acid removal
- High retention filter for removal of particulate as small as 25 microns
- High pressure shell and connections
- Powder paint finish approved for marine applications

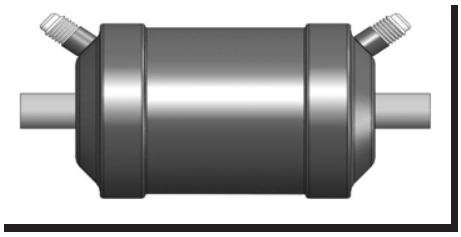

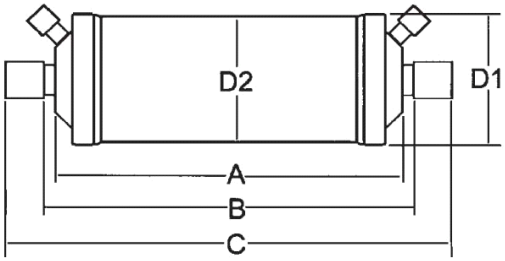

Dimensions

Part Number	Model	Dessicant Cu In	Size (in)	A (in)	B (in)	C (in)	D1 (in)	D2 (in)	Wt (lb)	Nominal Capacity (tons) Evaporator Temp 40°F		
										R134a	R404A, R507	R22, R407C, R410A
A 17224	FDS-164-TT	16	1/2	4.30	5.20	6.00	3.10	3.00	2.99	1.7	2.4	3.0
A 17227	FDS-165-TT	16	5/8	4.30	5.30	6.20	3.10	3.00	1.95	2.7	3.7	4.3
A 17228	FDS-166-TT	16	3/4	4.30	5.50	6.70	3.10	3.00	2.00	3.4	4.9	5.7
A 17229	FDS-167-TT	16	7/8	4.30	5.40	6.80	3.10	3.00	2.01	3.9	5.4	6.3
A 17230	FDS-169-TT	16	1 1/8	4.30	5.20	6.80	3.10	3.00	2.11			
A 17231	FDS-309-TT	30	1 1/8	7.30	8.10	9.80	3.10	3.00	3.13	5.7	7.7	8.9
A 17300	FDS-305-TT	30	5/8	7.30	8.30	9.20	3.10	3.00	2.99	3.1	4.3	5.1
A 17301	FDS-306-TT	30	3/4	7.30	8.50	9.70	3.10	3.00	3.03	4.0	5.4	6.3
A 17302	FDS-307-TT	30	7/8	7.30	8.30	9.80	3.10	3.00	3.06	4.6	6.3	7.4
A 17233	FDS-3013-TT	30	1 5/8						3.40			

232300 - LINE HIDE

LINE-HIDE™

Lineset Cover System

PROTECT & BEAUTIFY

MITSUBISHI ELECTRIC
HVAC Advanced Products Division

A complete system for completing the job

LINE-HIDE Lineset Cover System

PRODUCT INFORMATION & SPECIFICATIONS

MITSUBISHI ELECTRIC
HVAC Advanced Products Division

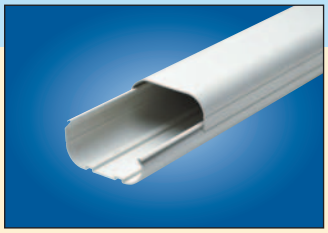
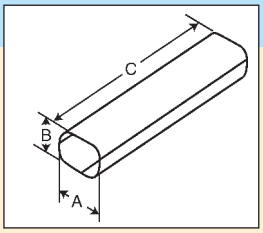

Split Line Tube (PVC)

Product	Dimensions (in inches) A	B	C	D	E	Weight (ounces)
CD-60	2-1/4	2-5/16	78-3/4			38.8
CD-75	2-15/16	2-7/16	78-3/4			44.1
CD-100	3-7/8	2-11/16	78-3/4			64.2
CD-140	5-7/16	3-1/16	78-3/4			73.4

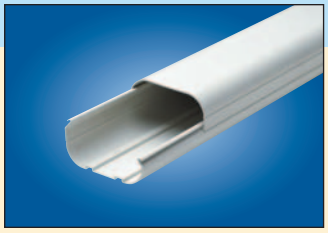
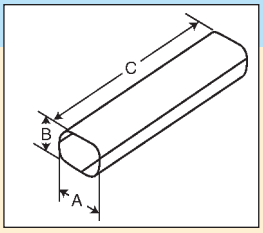

Split Line Tube (ASA)

DD-60	2-1/4	2-5/16	78-3/4			38.8
DD-75	2-15/16	2-7/16	78-3/4			44.1
DD-100	3-7/8	2-11/16	78-3/4			64.2
DD-140	5-7/16	3-1/16	78-3/4			73.4

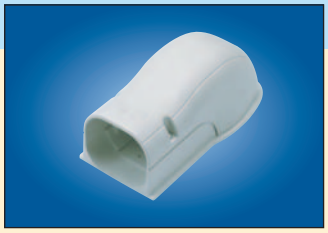
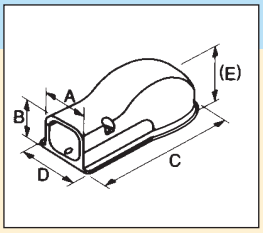

Wall Cover/Inlet

NW-60	2-9/16	2-9/16	7-7/8	3-1/16	3-3/16	6.3
NW-75	3-1/4	2-11/16	8-1/4	3-11/16	3-1/4	7.9
NW-100	4-3/16	2-15/16	9-1/8	4-11/16	3-3/4	10.6
NW-140	5-3/4	3-3/8	11-1/4	6-1/4	4-1/8	16.2

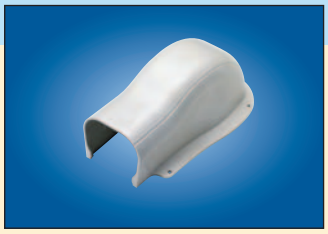
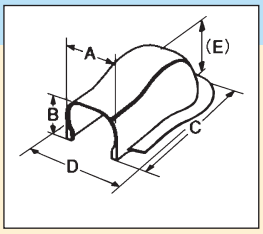

Simple Wall Cover

NY-60	2-9/16	2-9/16	7-7/8	3-1/16	3-3/16	6.3
NY-75	3-1/4	2-11/16	8-1/4	3-11/16	3-1/4	7.9
NY-100	4-3/16	2-15/16	9-1/8	4-11/16	3-3/4	10.6
NY-140	5-3/4	3-3/8	11-1/4	6-1/4	4-1/8	16.2


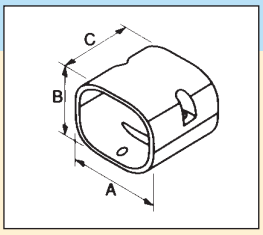

Socket/Coupling joins two pieces of tubing

NS-60	2-9/16	2-9/16	3-1/8			2.5
NS-75	3-1/4	2-11/16	3-1/8			2.8
NS-100	4-3/16	2-15/16	3-1/8			3.5
NS-140	5-3/4	3-3/8	3-1/8			4.8


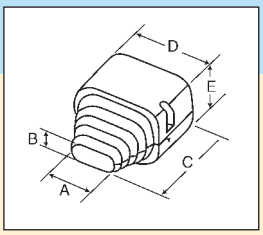

End Socket (Can be cut to accommodate various lineset combinations)

NR-60	2-1/16	1-3/16	3-7/8	2-9/16	2-9/16	2.3
NR-75	2-1/16	1-3/16	3-7/8	3-1/4	2-11/16	2.8
NR-100	2-1/16	1-3/16	4-1/2	4-3/16	2-15/16	4.1
NR-140	2-1/16	1-3/16	5-5/8	5-3/4	3-3/8	7.1

Product	Dimensions (in inches) A	B	C	D	E	Weight (ounces)

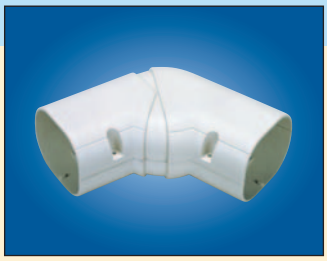
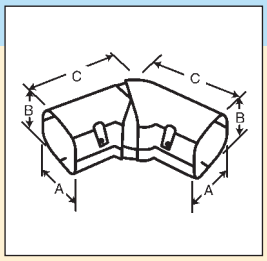

Universal Elbow (Horizontal) adjustable 45° to 90°

NX-75	3-1/4	2-11/16	6			7.6
NX-100	4-3/16	2-15/16	7-5/8			11.6
NX-140	5-3/4	3-3/8	9-3/4			17.6

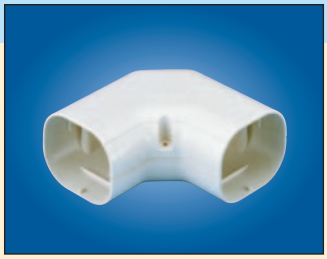
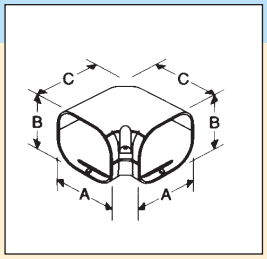

90° Elbow (Horizontal)

NE-60	2-9/16	2-9/16	4-11/16			4.8
NE-75	3-1/4	2-11/16	5-9/16			6.3
NE-100	4-3/16	2-15/16	6-5/16			8.5
NE-140	5-3/4	3-3/8	7-7/8			13.0


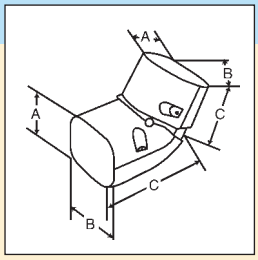

Universal Elbow (Vertical) adjustable 45° to 90°

NZ-60	2-9/16	2-9/16	4-5/8			5.3
NZ-75	3-3/8	2-11/16	4-13/16			6.0

Reversible for inside or outside corner

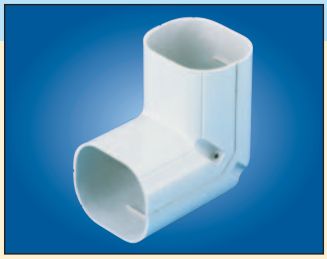
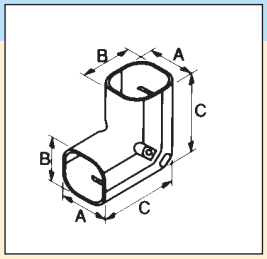

90° Elbow (Vertical)

NC-60	2-9/16	2-9/16	4-3/4			5.3
NC-75	3-1/4	2-11/16	4-7/8			6.0
NC-100	4-3/16	2-15/16	5-5/16			8.5
NC-140	5-3/4	3-3/8	5-7/8			11.6

Reversible for inside or outside corner

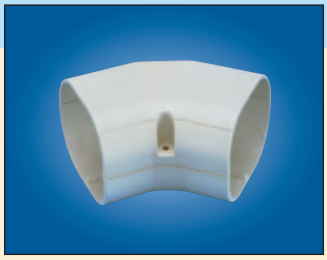
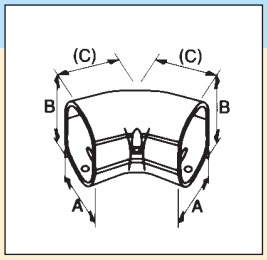

45° Elbow (Horizontal)

NM-60	2-9/16	2-9/16	2-11/16			3.4
NM-75	3-1/4	2-11/16	2-15/16			3.9
NM-100	4-3/16	2-15/16	3-5/16			5.3
NM-140	5-3/4	3-3/8	4-3/16			8.5

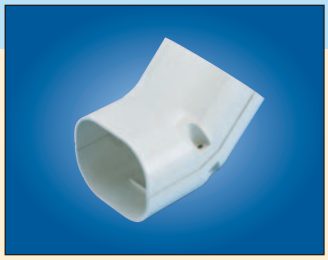
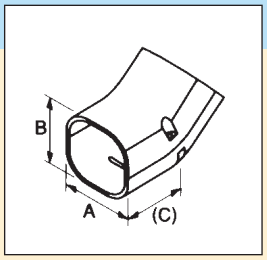

45° Elbow (Vertical)

NU-60	2-9/16	2-9/16	2-5/8			3.4
NU-75	3-1/4	2-11/16	2-13/16			4.2
NU-100	4-3/16	2-15/16	3-1/4			5.3
NU-140	5-3/4	3-3/8	3-11/16			8.3

Reversible for inside or outside corner

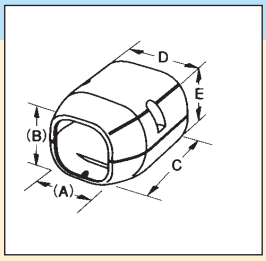

Variant Socket/Reducer (Used to change size of tube)

Product	Dimensions (in inches) A	B	C	D	E	Weight (ounces)
NJ-60/75	2 3/4	2-11/16	3-1/8	3-1/4	2-11/16	2.8
NJ-75/100	3 3/8	2-13/16	3-1/8	4-3/16	2-15/16	3.7
NJ-100/140	4-1/2	3-1/16	3-1/8	5-3/4	3-3/8	4.8

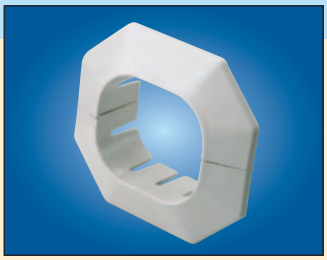

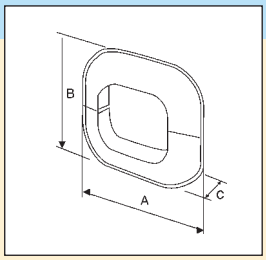

Wall Entry Fitting

NK-60	4-5/16	4-5/16	5/8			2.4
NK-75	4-15/16	4-1/2	5/8			2.7
NK-100	6-7/8	5-11/16	5/8			4.5
NK-140	8-11/16	7-1/16	5/8			6.7

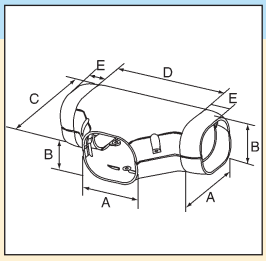

T-Joint

NT-75	3-1/4	2-11/16	4-3/4	6-5/16	1	8.0
NT-100	4-3/16	2-15/16	6-5/16	8-7/16	1-3/8	10.6
NT-140	5-3/4	3-3/8	7-7/8	10	1-3/8	16.4

NT-75 suppplied with 2 Reducing Adaptors (75>60)

NT-100 suppplied with 4 Reducing Adaptors: 2 - (100>60) & 2 - (100>75)

NT-140 suppplied with 2 Reducing Adaptors (140>100)

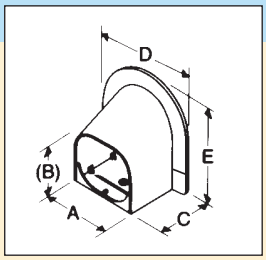

Corner Cap/Soffit Entry Fitting

NA-60	2-5/8	2-9/16	2-5/8	4-1/8	4-5/16	3.2
NA-75	3-5/16	2-3/4	2-5/8	4-7/8	4-15/16	3.5
NA-100	4-5/16	3	2-5/8	5-7/8	5-1/2	4.6
NA-140	5-13/16	3-3/8	2-5/8	7-7/16	6-1/8	5.5

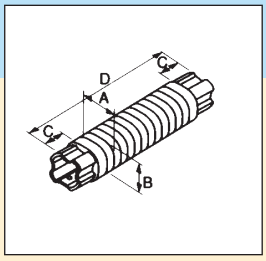

Flexible Joint (Polypropylene material) available in nominal 2-foot and 3-foot lengths

NF-60	2-5/16	2-3/8	2-3/8	21-5/8		4.1
NF-60M	2-5/16	2-3/8	2-3/8	39-3/8		10.2
NF-75	3	2-1/2	2-3/8	21-5/8		4.8
NF-75M	3	2-1/2	2-3/8	39-3/8		12.3
NF-100	4	2-3/4	2-15/16	31-1/2		12.7
NF-140	5-1/2	3-1/8	3-1/8	39-3/8		20.8

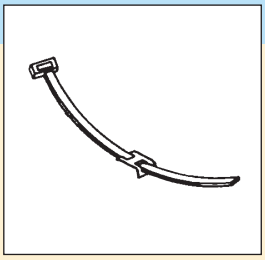

Saddle Band

NV-S	11-13/16					0.0
NV-L	14-3/16					0.0

NV-L for 100 and 140; NV-S for 60 and 75

Base snaps into track in line tube to hold lineset in place.

LINE-HIDE™

Lineset Cover System

Put a professional finish on air conditioning installation with an easy-to-install modular system that beautifies exteriors and protects linesets, drainlines, and wiring.

- **Available in four sizes — 2¼", 3", 4", and 6" tubes.**
- **Snap-on covers and a full selection of couplings, elbows, T-joints, caps, and more for any application, complex or simple.**
- **High-quality PVC with UV inhibitors for outdoor service in all weather conditions.**
- **Can be painted with most house paints to match exterior decors.**
- **Not just for HVAC. Hide any exterior cabling, piping, or wiring.**
- **Use it indoors, too! Meets UL94v-0 for interior applications.**

Line-Hide Specifications:

Material	Weather resistant, UV stabilized, ASA/PVC/ABS/Poly/PE
Temperature Range	PVC: -4°F to 140°F ASA: -4°F to 194°F
Fire Rating	PVC/ABS meets UL94v-0, Poly/PE meets UL94HB
Weather Resistance	Pass 2,000 hour test to JIS DO 205 Standard
Standard Color	Ivory
Mounting	Molded in mounting screw locations
Assembly Screws	Stainless Steel

Limited Warranty

Mitsubishi Electric & Electronics USA, Inc. warrants to the original consumer purchaser of a Line-Hide product that it will replace any part which fails due to a manufacturing defect within one year from the date of original purchase. This warranty covers only replacement of the product itself with the owner paying all other costs, including labor, mileage, and transportation.

To make a warranty claim, contact your installer, or contact Mitsubishi Electric & Electronics USA, Inc., at **678/376-2900**, **fax 678/376-2890**. You must present proof of purchase to make a claim.

WHAT IS NOT COVERED:
Conditions and damages resulting from improper installation, delivery, or maintenance.
Misuse, abuse, accidents, or unreasonable use of product.
The cost of service to correct installation errors.
Consequential or incidental damages sustained by any person as a result of any breach of this warranty.

THIS WARRANTY IS NON-TRANSFERABLE AND IS THE ONLY WARRANTY PROVIDED. ALL OTHER WARRANTIES, INCLUDING THE IMPLIED WARRANTIES OF MERCHANTABILITY AND FITNESS FOR A PARTICULAR PURPOSE, ARE EXPRESSLY DISCLAIMED.

THIS WARRANTY GIVES YOU SPECIFIC LEGAL RIGHTS. HOWEVER, YOU MAY HAVE OTHER RIGHTS WHICH MAY VARY FROM STATE TO STATE. SOME STATES DO NOT ALLOW LIMITATION ON IMPLIED WARRANTIES OR EXCLUSION OF CONSEQUENTIAL DAMAGES; THEREFORE THESE RESTRICTIONS MAY NOT APPLY TO YOU.

MITSUBISHI ELECTRIC
HVAC Advanced Products Division

3400 Lawrenceville Suwanee Rd. • Suwanee, GA 30024

phone 678/376-2900 • fax 678/376-2890 • E-mail line-hide@hvac.mea.com • www.line-hide.com

LBRCA11 06/05 10M

Our DURA-BLOK products gives you a versatile and long-term solution for all your roof top support needs. Designed with flexibility in mind, DURA-BLOK is ideal for roof top support applications such as pipe, HVAC, duct, conduit, cable tray, and roof walkways.

Manufactured to provide years of service in harsh, roof top environments, DURA-BLOK is made from 100% recycled rubber, require no supplemental rubber pads, and will not float or blow away. 1" (25.4) gaps between blocks allow water to flow freely around longer assemblies. For added strength, the DURA-BLOK support channel is through bolted on all sizes. For added visibility, a reflective strip is incorporated on both sides of each DURA-BLOK.

Beyond product durability, DURA-BLOK helps to dampen vibration, are not sharp or abrasive and require no roof penetration to maximize existing roof life - and roof structural and environmental integrity.

Recommended Torque (In channels)

Bolt Size	1/4"-20	5/16"-18	3/8"-16	1/2"-13
Foot/Lbs.	6	11	19	50
Nm	8	15	26	68

Bolt Size	M6x1	M8 x1.25	M10 x 1.5	M12x1.75
Nm	12	17	36	62
Foot/Lbs.	9	13	27	46

Materials & Finishes

See appropriate fitting pages.
Alternative finishes available upon request.

Metric

Metric dimensions are shown in parentheses.
Unless noted, all metric dimensions are in millimeters.

Support Bases Only

- Base only - see chart for height, width and length.
- 100% recycled rubber, UV resistant.
- Load Rating - Ultimate Uniform Load (See Chart Below)*
- DURA-BLOK channel support is designed as an economical support for piping systems, cable tray, HVAC equipment and many other applications. The DURA-BLOK is UV resistant and suitable for any type of roofing material or other flat surfaces. Material effectively accepts screw fasteners for securing accessories.


DBM


DBP

Part No.	Height x Width x Length In.	mm	Wt./Each Lbs.	kg	Load Rating Lbs.	kN
DBM	4″ x 6″ x 4.8″	(101.6 x 152.4 x 121.9)	2.35	(1.07)	200	(0.89)
DBP	4″ x 6″ x 9.6″	(101.6 x 152.4 x 243.8)	4.48	(2.03)	500	(2.22)

DB Series - Support Bases with B44 Channel

- Base with 14 ga. (1.9mm) galvanized channel 1″ high (25.4mm) - see chart for height, width and length.
- 100% recycled rubber, UV resistant.
- Load Rating - Ultimate Uniform Load (See Chart Below)*
- DURA-BLOK DB-Series channel support is designed for superior support of piping systems, cable tray, HVAC equipment, walkway systems and many other applications. The DURA-BLOK is UV resistant and suitable for installation on any type of roofing material or other flat surfaces. (For pipe straps/clamps, rollers and roller supports that can be used with these DURA-BLOK supports, see page 159)
- For sloped roofs use B634 adjustable hinge fittings (see page 85).

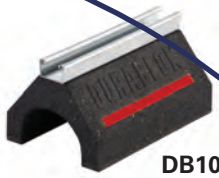
DB10


DB20


DB30

Part No.	Height x Width x Length In.	mm	Wt./Each Lbs.	kg	Load Rating Lbs.	kN
DB5	5″ x 6″ x 4.8″	(127.0 x 152.4 x 121.9)	2.75	(125)	200	(0.89)
DB10	5″ x 6″ x 9.6″	(127.0 x 152.4 x 243.8)	5.28	(2.39)	500	(2.22)
DB20	5″ x 6″ x 20.2″	(127.0 x 152.4 x 513.1)	10.63	(4.82)	1000	(4.45)
DB30	5″ x 6″ x 30.8″	(127.0 x 152.4 x 782.3)	15.99	(7.25)	1500	(6.67)
DB40	5″ x 6″ x 41.4″	(127.0 x 152.4 x 1051.5)	21.34	(9.68)	2000	(8.89)
DB48	5″ x 6″ x 52.0″	(127.0 x 152.4 x 1320.8)	26.70	(12.40)	2500	(11.12)

ACC-A&B >>>
17" WIDE
ACC-C >>>
4 UNITS - 34"WIDE

DB6 Series - Support Base with B12 Channel

- Base with 12 ga. (2.6mm) galvanized channel 2 7/16″ high (61.9mm) - see chart for height, width and length.
- 100% recycled rubber, UV resistant.
- Load Rating - Ultimate Uniform Load (See Chart Below)*
- DURA-BLOK DB-Series channel support is designed for superior support of piping systems, cable tray, HVAC equipment, walkway systems and many other applications. The DURA-BLOK is UV resistant and suitable for installation on any type of roofing material or other flat surfaces. (For pipe straps/clamps, rollers and roller supports that can be used with these DURA-BLOK supports, see page 159)
- For sloped roofs use B634 adjustable hinge fittings (see page 85).

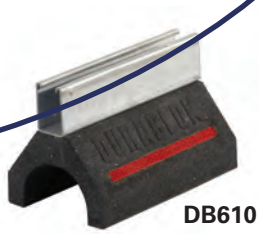
DB610


DB620


DB630

Part No.	Height x Width x Length In.	mm	Wt./Each Lbs.	kg	Load Rating Lbs.	kN
DB610	6 7/16″ x 6″ x 9.6″	(163.5 x 152.4 x 243.8)	6.36	(2.88)	500	(2.22)
DB620	6 7/16″ x 6″ x 20.2″	(163.5 x 152.4 x 513.1)	12.90	(5.85)	1000	(4.45)
DB630	6 7/16″ x 6″ x 30.8″	(163.5 x 152.4 x 782.3)	19.45	(8.82)	1500	(6.67)
DB640	6 7/16″ x 6″ x 41.4″	(163.5 x 152.4 x 1051.5)	26.00	(11.79)	2000	(8.89)
DB648	6 7/16″ x 6″ x 52.0″	(163.5 x 152.4 x 1320.8)	32.55	(14.76)	2500	(11.12)

*** General Note:** Consult roofing manufacturer or engineer for roof load capacity. The weakest point may be the insulation board beneath the rubber membrane.

Reference page 153 for general fitting and standard finish specifications.

DURA-BLOK™ Rooftop Supports

DB10 SERIES
Support Bases with B22 Channel


DB10-36

- Two (2) bases bridged with 12 ga. (2.6mm) galvanized channel 1 5/8" high (41.3mm) - see chart for height, width and length.
- 100% recycled rubber, UV resistant.
- Load Rating: 1000 lbs. (4.45kN) (Uniform Load)*
- DURA-BLOK DB10-Series channel support is designed for superior support of piping systems, cable tray, HVAC equipment, walkway systems and many other applications. The DURA-BLOK is UV resistant and suitable for installation on any type of roofing material or other flat surfaces. (For pipe straps/clamps, rollers and roller supports that can be used with these DURA-BLOK supports, see page 159)

Part No.	Height x Width x Length In.	mm	Wt./Each Lbs.	kg
DB10-28	5 5/8" x 6" x 28"	(142.9 x 152.4 x 711.2)	13.16	(5.97)
DB10-36	5 5/8" x 6" x 36"	(142.9 x 152.4 x 914.4)	14.36	(6.51)
DB10-42	5 5/8" x 6" x 42"	(142.9 x 152.4 x 1066.8)	15.52	(7.04)
DB10-50	5 5/8" x 6" x 50"	(142.9 x 152.4 x 1270.0)	16.45	(7.46)
DB10-60	5 5/8" x 6" x 60"	(142.9 x 152.4 x 1524.0)	17.94	(8.14)


DB10-50

DBM SERIES
Support Base with Riser Rod & Clamp

- Base with 3/8"-16 threaded rod and B3198H clamp - see chart for height, width and length
- 100% recycled rubber, UV resistant.
- Load Rating" 50 lbs. (0.22kN) (Ultimate Load)*
- DURA-BLOK DBM-Series pipe/tubing support is designed for support of single piping systems where elevation adjustment is needed. The DURA-BLOK is UV resistant and suitable for installation on any type of roofing material or other flat surfaces.

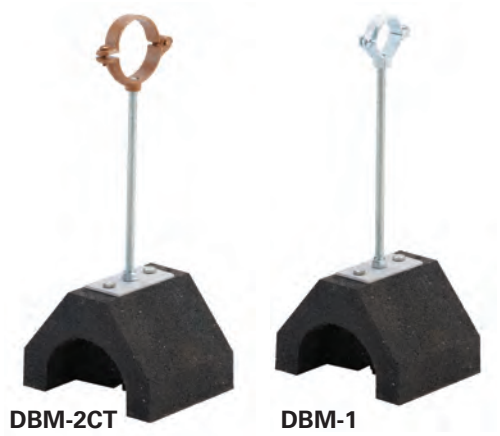
DBM-2CT DBM-1

Part No.	Clamp Part No.†	Block -Height x Width x Length In.	mm	Height** Min.-Max. In.	mm	Wt./Each Lbs.	kg
DBM-1/2CT	B3198HCT-1/2	4" x 6" x 4.8"	(101.6 x 152.4 x 121.9)	9.69"-11.19"	(246.1-284.2)	2.75	(1.25)
DBM-3/4CT	B3198HCT-3/4	4" x 6" x 4.8"	(101.6 x 152.4 x 121.9)	9.84"-11.34"	(249.9-2288.0)	2.76	(1.25)
DBM-1CT	B3198HCT-1	4" x 6" x 4.8"	(101.6 x 152.4 x 121.9)	9.95"-11.45"	(252.7-290.8)	2.84	(1.29)
DBM-1 1/4CT	B3198HCT-1 1/4	4" x 6" x 4.8"	(101.6 x 152.4 x 121.9)	10.13"-11.63"	(257.3-295.4)	2.95	(1.34)
DBM-1 1/2CT	B3198HCT-1 1/2	4" x 6" x 4.8"	(101.6 x 152.4 x 121.9)	10.28"-11.78"	(261.1-299.2)	2.96	(1.34)
DBM-2CT	B3198HCT-2	4" x 6" x 4.8"	(101.6 x 152.4 x 121.9)	10.53"-12.03"	(267.4-305.5)	3.03	(1.37)
DBM-1/2	B3198H-1/2	4" x 6" x 4.8"	(101.6 x 152.4 x 121.9)	9.86"-11.36"	(250.4-288.5)	2.78	(1.26)
DBM-3/4	B3198H-3/4	4" x 6" x 4.8"	(101.6 x 152.4 x 121.9)	10.06"-11.56"	(255.5-293.6)	2.84	(1.29)
DBM-1	B3198H-1	4" x 6" x 4.8"	(101.6 x 152.4 x 121.9)	10.14"-11.64"	(257.5-295.6)	2.86	(1.30)
DBM-1 1/4	B3198H-1 1/4	4" x 6" x 4.8"	(101.6 x 152.4 x 121.9)	10.25"-11.75"	(260.3-298.4)	2.93	(1.33)
DBM-1 1/2	B3198H-1 1/2	4" x 6" x 4.8"	(101.6 x 152.4 x 121.9)	10.42"-11.92"	(264.6-302.7)	2.99	(1.36)
DBM-2	B3198H-2	4" x 6" x 4.8"	(101.6 x 152.4 x 121.9)	10.66"-12.16"	(270.7-308.8)	3.10	(1.41)

† See Pipe Hanger Catalog for dimensions and specifications. *** From bottom of rubber block to center of pipe/tubing.*

*** General Note:** Consult roofing manufacturer or engineer for roof load capacity. The weakest point may be the insulation board beneath the rubber membrane.

Reference page 153 for general fitting and standard finish specifications.

DBE Series
Support Base with Rod Risers & Channel

- Base with (2) 1/2″ electro zinc all threaded rod risers - Top channel is 1″ (25.4mm) tall. See chart for adjustable height x wide x length.
- 100% recycled rubber, UV resistant.
- Load Rating* 200 lbs. (0.89kN) (To increase load capacity use load distribution plate CLDP10)
- DURA-BLOK DBE-Series channel support is designed as a superior support of piping systems, cable tray, HVAC equipment and many other applications where elevation adjustment is critical. The DURA-BLOK is UV resistant and suitable for installation on any type of roofing material or other flat surfaces. (For pipe straps/clamps, rollers and roller supports that can be used with these DURA-BLOK supports, see page 159)

Part No.	Adjustable Height x Width x Length In.	mm	Wt./Each Lbs.	kg
DBE10-8	5 1/2-8″ x 6″ x 9.6″	(139.7-152.4 x 152.4 x 243.8)	5.68	(2.58)
DBE10-12	5 1/2-12″ x 6″ x 9.6″	(139.7-304.8 x 152.4 x 243.8)	5.72	(2.59)
DBE10-16	5 1/2-16″ x 6″ x 9.6″	(139.7-406.4 x 152.4 x 243.8)	5.76	(2.61)

DBR Series
Support Base with Rod Risers & Pipe Roll

- Base with (2) 1/2″ electro zinc all threaded rod risers and a B3114-3 1/2 pipe roll with sockets - base is 4″ (101.6mm) high x 6″ (152.4mm) wide x 9.6″ (243.8mm) long. Overall height is 12″ (304.8mm) from bottom of base to contact point on roller.
- Pipe roll & sockets for up to 3 1/2″ (90) pipe sizes.
- 100% recycled rubber, UV resistant.
- Load Rating* 200 lbs. (0.89kN) (To increase load capacity use load distribution plate CLDP10)
- DURA-BLOK DBR-Series support is designed to support pipe up to 3 1/2″ (90) nominal size where difference in elevation is required and longitudinal movement is expected. The DURA-BLOK is UV resistant and approved for installation on any type of roofing material or other flat surfaces.

Part No.	Adjustable Height x Width x Length In.	mm	Wt./Each Lbs.	kg
DBR10-12	up to 12″ x 6″ x 9.6″	(up to 304.8 x 152.4 x 243.8)	8.20	(3.72)

CLDP10
Load Distribution Plate

- 11 ga. (3.0mm) steel plate with slots.
- Dimensions: 1 5/8″ (41.3mm) wide x 9 1/2″ (241.3mm) long.
- DURA-BLOK CLDP10 load bearing stabilizer plate increases load ratings for DBE Series and DBR Series by allowing the load from the threaded rods to be distributed over the length of the base instead of the point load where the rods attach to the base.

Loosen hex nuts and slide plate under the flat washers

Retighten the hex nuts with plate in place

Part No.	Thickness x Width x Length In.	mm	Wt./Each Lbs.	kg
CLDP10	11 Ga. x 1 5/8″ x 9 1/2″	(3.0 x 41.3 x 241.3)	0.53	(0.24)

*** General Note:** Consult roofing manufacturer or engineer for roof load capacity. The weakest point may be the insulation board beneath the rubber membrane.

Reference page 153 for general fitting and standard finish specifications.

DURA-BLOK™ Rooftop Supports

DB__DS Series
Support Bases with B22SH
Vertical & Horizontal Channel Members

- Product is shipped unassembled.
- Two (2) DB20 bases with 14 ga. (1.9mm) galvanized channel 1" high (25.4mm) -
  Bases are 5" (127.0mm) high x 6" (152.4mm) wide x 20.2" (513.1mm) long.
  Vertical & Horizontal Riser Channels (SH Style) - 1 5/8" (41.3mm) x 1 5/8" (41.3mm) x 12 ga. (2.6mm)
  Fittings & Hardware - Electro-Plated Steel
- 100% recycled rubber, UV resistant.
- Ultimate Load Rating: 1000 lbs. (4.45kN) (Uniform Load)*
- DURA-BLOK DB__DS-Series channel support with risers is designed for superior support of piping systems, cable tray, HVAC equipment, walkway systems and many other applications. The DURA-BLOK is UV resistant and suitable for installation on any type of roofing material or other flat surfaces.
  (For pipe straps/clamps, rollers and roller supports that can be used with these DURA-BLOK supports, see page 159)

DB2318DS

DB2924DS

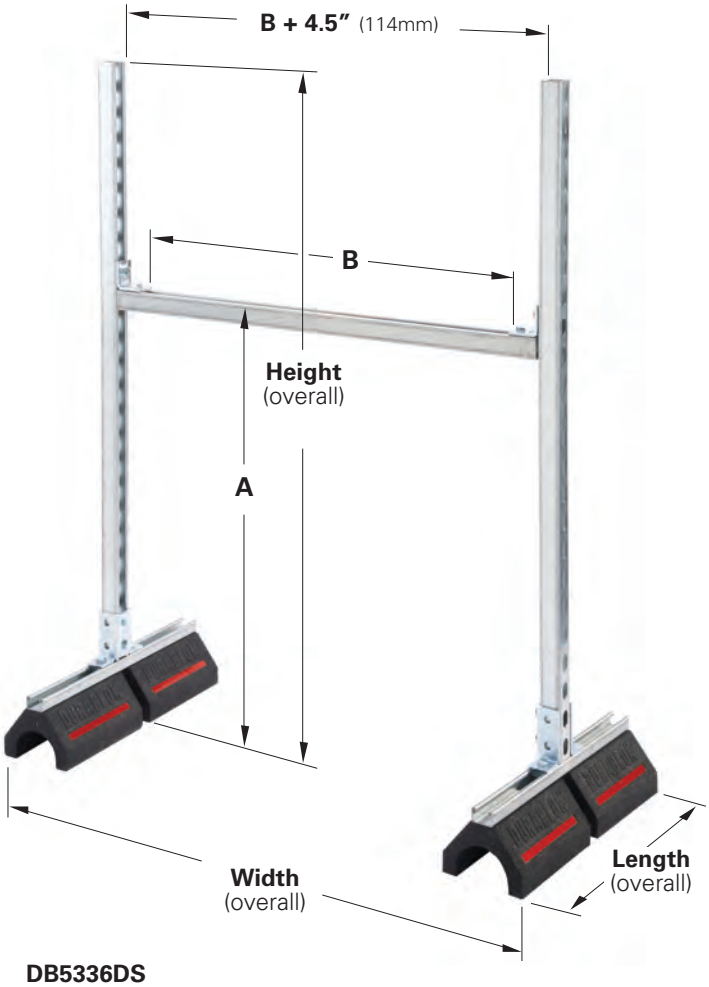

DB5336DS

*** General Note:** Consult roofing manufacturer or engineer for roof load capacity.
The weakest point may be the insulation board beneath the rubber membrane.

Reference page 153 for general fitting and standard finish specifications.

DB__DS Series cont.

Part No.	A Min. to Max. In.	mm	B In.	mm
DB2318DS	10.56″ to 20.75″	(268 to 527)	13 1/2″	(343)
DB2918DS	10.56″ to 26.75″	(268 to 679)	13 1/2″	(343)
DB4118DS	10.56″ to 38.75″	(268 to 984)	13 1/2″	(343)
DB5318DS	10.56″ to 50.75″	(268 to 1289)	13 1/2″	(343)
DB2324DS	10.56″ to 20.75″	(268 to 527)	19 1/2″	(495)
DB2924DS	10.56″ to 26.75″	(268 to 679)	19 1/2″	(495)
DB4124DS	10.56″ to 38.75″	(268 to 984)	19 1/2″	(495)
DB5324DS	10.56″ to 50.75″	(268 to 1289)	19 1/2″	(495)
DB2336DS	10.56″ to 20.75″	(268 to 527)	31 1/2″	(800)
DB2936DS	10.56″ to 26.75″	(268 to 679)	31 1/2″	(800)
DB4136DS	10.56″ to 38.75″	(268 to 984)	31 1/2″	(800)
DB5336DS	10.56″ to 50.75″	(268 to 1289)	31 1/2″	(800)
DB2348DS	10.56″ to 20.75″	(268 to 527)	43 1/2″	(1105)
DB2948DS	10.56″ to 26.75″	(268 to 679)	43 1/2″	(1105)
DB4148DS	10.56″ to 38.75″	(268 to 984)	43 1/2″	(1105)
DB5348DS	10.56″ to 50.75″	(268 to 1289)	43 1/2″	(1105)

Part No.	Height (overall) In.	mm	Width (overall) In.	mm	Length (overall) In.	mm	Wt./Each lbs.	kg
DB2318DS	23″	(584)	25 5/8″	(651)	20.2″	(513)	33.31	(15.11)
DB2918DS	29″	(736)	25 5/8″	(651)	20.2″	(513)	35.00	(15.88)
DB4118DS	41″	(1041)	25 5/8″	(651)	20.2″	(513)	38.40	(17.42)
DB5318DS	53″	(1346)	25 5/8″	(651)	20.2″	(513)	41.80	(18.96)
DB2324DS	23″	(584)	31 5/8″	(803)	20.2″	(513)	34.15	(15.49)
DB2924DS	29″	(736)	31 5/8″	(803)	20.2″	(513)	35.84	(16.26)
DB4124DS	41″	(1041)	31 5/8″	(803)	20.2″	(513)	39.25	(17.80)
DB5324DS	53″	(1346)	31 5/8″	(803)	20.2″	(513)	42.65	(19.34)
DB2336DS	23″	(584)	43 5/8″	(1108)	20.2″	(513)	35.84	(16.26)
DB2936DS	29″	(736)	43 5/8″	(1108)	20.2″	(513)	37.56	(17.03)
DB4136DS	41″	(1041)	43 5/8″	(1108)	20.2″	(513)	40.95	(18.57)
DB5336DS	53″	(1346)	43 5/8″	(1108)	20.2″	(513)	44.34	(20.11)
DB2348DS	23″	(584)	55 5/8″	(1415)	20.2″	(513)	37.55	(17.03)
DB2948DS	29″	(736)	55 5/8″	(1415)	20.2″	(513)	39.25	(17.80)
DB4148DS	41″	(1041)	55 5/8″	(1415)	20.2″	(513)	42.65	(19.34)
DB5348DS	53″	(1346)	55 5/8″	(1415)	20.2″	(513)	46.03	(20.88)

A = Adjustable height from bottom of DURA-BLOK to top of horizontal channel.
B = Space between fittings that support horizontal channel.
Height (overall) = Distance from bottom of DURA-BLOK to top of upright channel.
Width (overall) = Distance from outside-to-outside of DURA-BLOK supports.
Length (overall) = Distance from end-to-end of DURA-BLOK supports.

Reference page 153 for general fitting and standard finish specifications.

DURA-BLOK™ Rooftop Supports

DBR Series
Support Bases with B42 Channel & Pipe Roller

- Base with 14 ga. (1.9mm) galvanized channel 1″ high (25.4mm) tall - see chart for height, width and length.
- 100% recycled rubber, UV resistant.
- Load Rating: (See Chart Below)*
- DURA-BLOK DBR-Series support is designed to support pipe where longitudinal movement is expected. The DURA-BLOK is UV resistant and approved for installation on any type of roofing material or other flat surfaces.

DBR4-6

DBR16-20

Part No.	Roller Part No.†	Block & Channel -Height x Width x Length In.	mm	Height** In.	mm	Wt./Each Lbs.	kg	Load Rating Lbs.	kN
DBR2-3 1/2	B3126-2 to 3 1/2	5″ x 6″ x 9.6″	(127.0 x 152.4 x 243.8)	7.09″	(180)	5.28	(2.39)	500	(2.22)
DBR4-6	B3126-4 to 6	5″ x 6″ x 9.6″	(127.0 x 152.4 x 243.8)	7.09″	(180)	10.63	(4.82)	500	(2.22)
DBR8-10	B3126-8-10	5″ x 6″ x 20.2″	(127.0 x 152.4 x 513.1)	8.34″	(212)	15.99	(7.25)	1000	(4.45)
DBR12-14	B3126-12-14	5″ x 6″ x 20.2″	(127.0 x 152.4 x 513.1)	9.38″	(238)	21.34	(9.68)	1000	(4.45)
DBR16-20	B3126-16-20	5″ x 6″ x 20.2″	(127.0 x 152.4 x 513.1)	9.78″	(248)	26.70	(12.11)	1000	(4.45)

† See Pipe Hanger Catalog for dimensions and specifications. *** From bottom of rubber block to bottom of pipe/tubing.*

Compatible Components Available to make DURA-BLOK bases more versatile

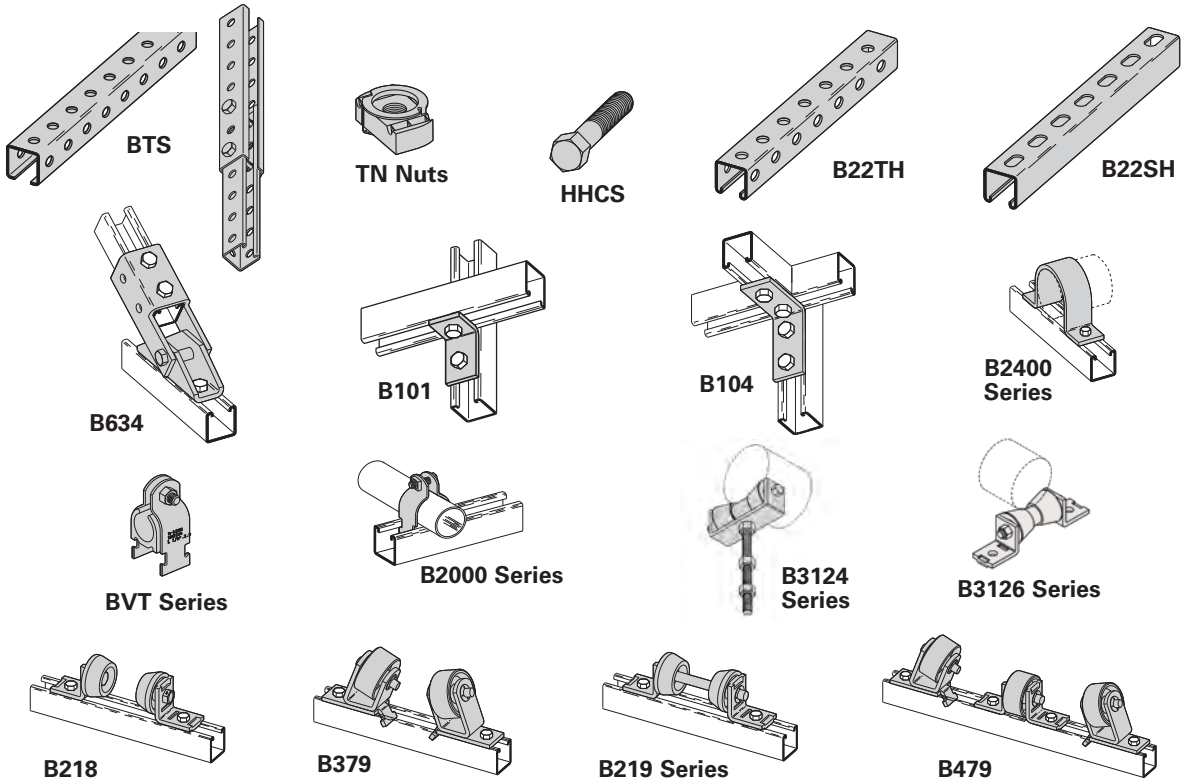

Above rollers can be mounted on DB Series, DB6 Series, and DB10 Series units.

Reference page 153 for general fitting and standard finish specifications.

Rooftop Applications









Rooftop Supports In Walkway Applications

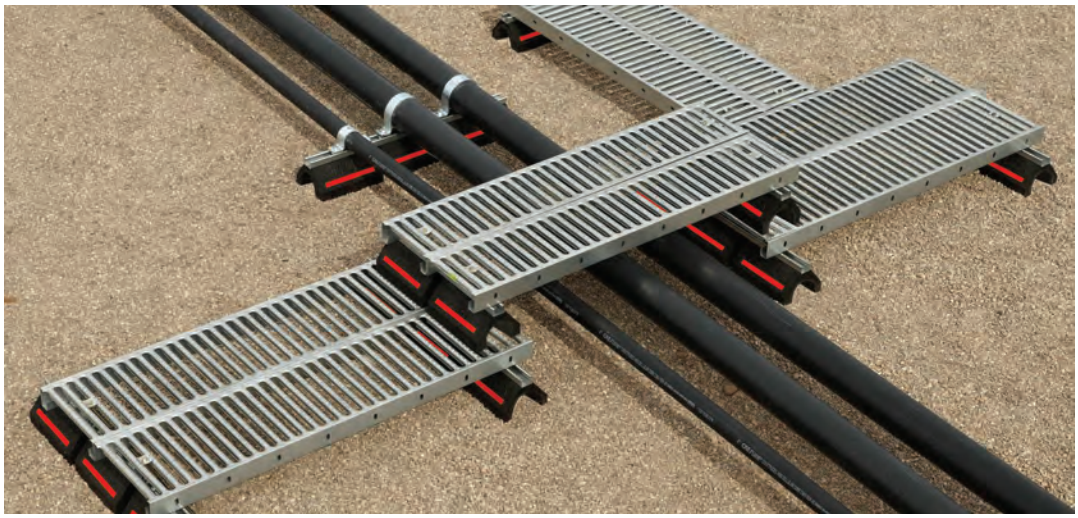

- Safety Grating is available with slip resistant GRATE-LOCK™, helping provide a safe walkway for foot traffic on the roof.
- Easy to install, elevated design, creates an identifiable path for foot traffic helping prevent wear and tear to the roof surface.
- The cross-over design offers safe passage over existing cabling, piping, cable tray or any other interference on the rooftop.
- The self cleaning pattern allows water and dirt to easily flow through, helping make the grating an ideal walkway in all weather conditions.
- Handrail options are available

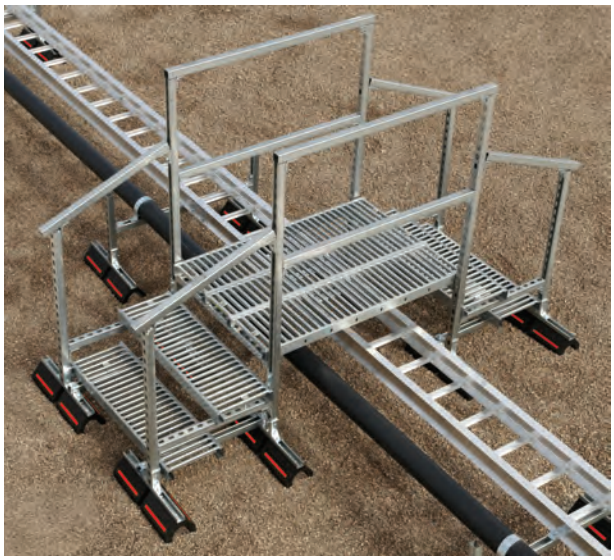

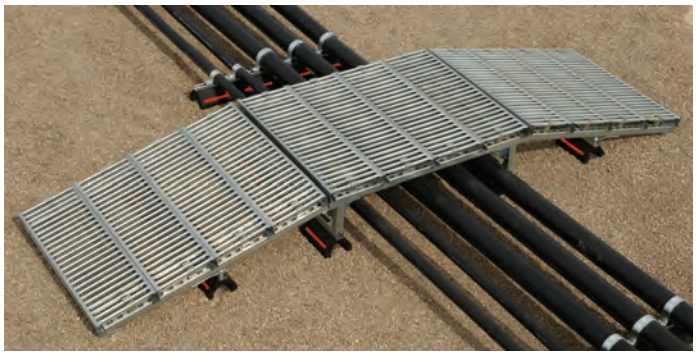

THE HARRIS PRODUCTS GROUP
A LINCOLN ELECTRIC COMPANY
4501 Quality Place • Mason, OH 45040 U.S.A Tel: 513-754-2000 Fax: 513-754-6015

TECHNICAL SPECIFICATION SHEET

ISO 9001
Cert. No. 31598

STAY-SILV® 5 BRAZING FILLER METAL

Description

Stay-Silv® 5 brazing filler metal is a frequent choice for brazing copper. It has a wide melting range which allows the operator to fill loose connections. It can be used to braze brass with the use of Stay-Silv® white brazing flux. Stay-Silv® 5 is not recommended for brazing steel or other ferrous metals.

NOMINAL CHEMICAL COMPOSITION:

Silver	4.8-5.2 %
Phosphorus	5.8-6.2%
Copper	Balance
Other Totals	0.15 % maximum

PHYSICAL PROPERTIES:

Solidus	1190°F (643°C)	Electrical Conductivity	9.6
Liquidus	1494 -1506°F (812-819°C)	Electrical Resistivity	18.1
Brazing Temperature Range	1320 - 1500°F (716 - 816°C)	Specific Gravity	8.14

Available forms

Standard wire and rod diameters and formed rings.

Specification Compliance

ANSI/AWS A5.8 Class BCuP-3, ASME SFA 5.8 Class BCuP-3, QQ-B-650C Class BCuP-3

Recommended Flux

No flux required for copper to copper connections. Stay-Silv® white brazing flux for brass or bronze.

WARNING: PROTECT yourself and others. Read and understand this information.
FUMES AND GASES can be hazardous to your health.
ARC RAYS can injure eyes and burn skin.
ELECTRIC SHOCK can KILL.

- Before use, read and understand the manufacturer's instructions, Material Safety Data Sheets (MSDS), and your employer's safety practices.
- Keep your head out of fumes.
- Use enough ventilation, exhaust at the flame, or both, to keep fumes and gases from your breathing zone and the general area.
- Wear correct eye, ear, and body protection.
- Do not touch live electrical parts.
- See American National Standard Z49.1, *Safety in Welding, Cutting, and Allied Processes,* published by the American Welding Society, 550 N.W. LeJeune Road, Miami, Florida 33126; OSHA Safety and Health Standards, available from the U.S. Government Office, Washington, DC 20402.

Additional information available at our web site: www.harrisproductsgroup.com

3/08 MK