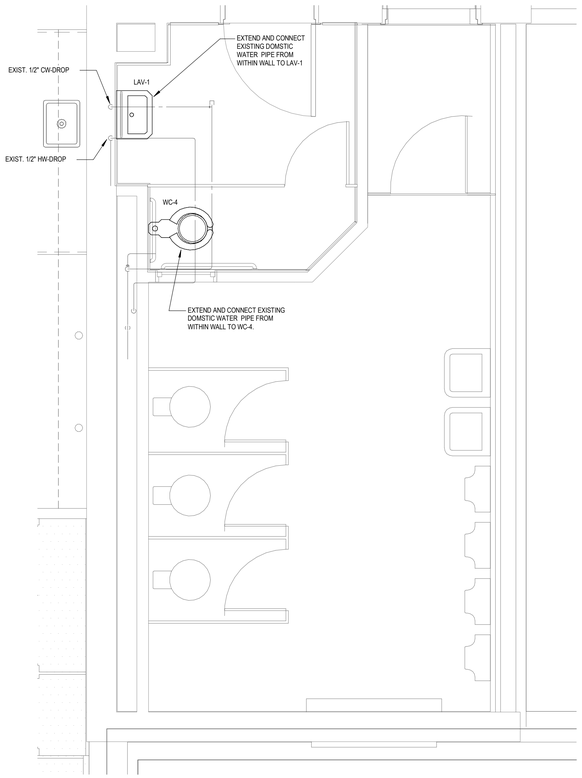

1 SECOND FLOOR TEACHER'S BATHROOM DOMESTIC WATER INSTALLATION PLAN
1/2" = 1'-0"

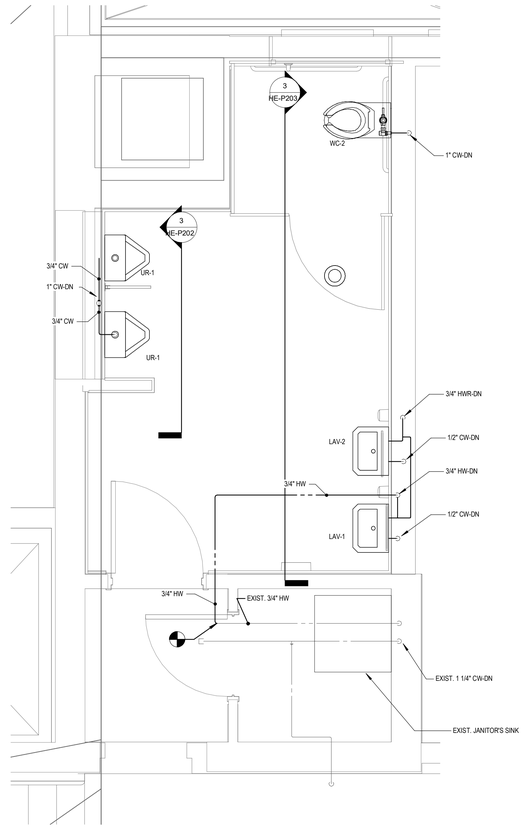

2 SECOND FLOOR BATHROOM DOMESTIC WATER INSTALLATION PLAN
1/2" = 1'-0"

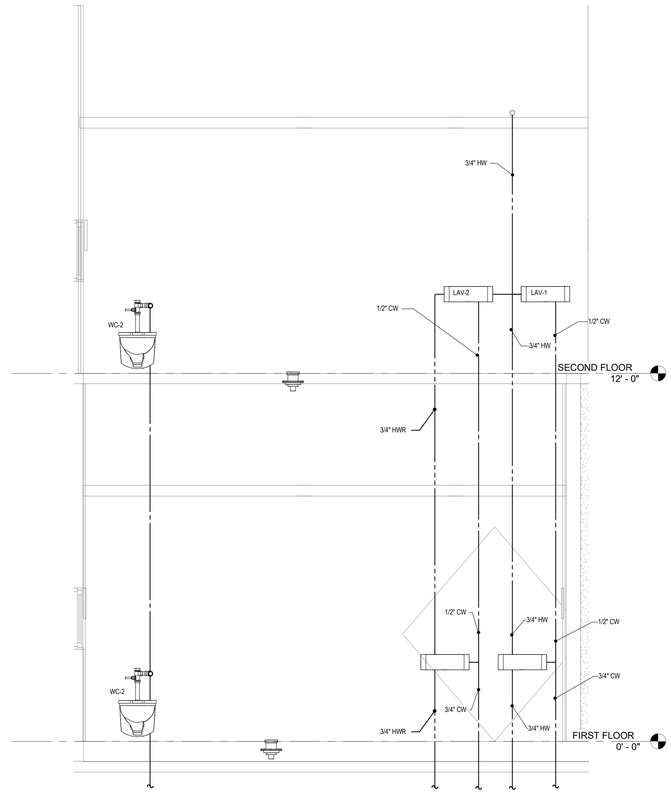

3 DOMSTIC WATER SECTIONS AT BOYS BATHROOM WATER CLOSETS AND LAVS
1/2" = 1'-0"

ARCHITECT

ksqdesign

NEW YORK OKLAHOMA

KSQ Design
215 W 40th Street 15th Floor
New York, NY 10018
646.435.0660 office
www.ksq.design

Owner

Nanuet Union Free School District
101 Church Street
Nanuet, NY 10954
845.627.9880
www.nanuetsd.org

Structural Engineer

Clapper Structural Engineering
160 Partition Street
Saugerties, NY 12477
845.943.9601
www.clapperstructural.com

MEP Engineer

Sage Engineering Associates, LLP
9 Columbia Circle
Albany NY 12203
518.453.6091
www.sagelp.com
NYS CERTIFICATE AUTHORIZATION NUMBER 0910844

Environmental Engineer

Quest Environmental Solutions
1376 Route 9
Wappingers Falls, NY 12590
845.298.6251
www.qualityenv.com

Construction Manager

Jacobs
One Penn Plaza
24th Floor, Suite 2400
New York, NY 10119
646.908.6550
www.jacobs.com

STATE OF NEW YORK · JOHN VENDITTI · 083994 · LICENSED PROFESSIONAL ENGINEER
REGISTRATION EXPIRES: 11/30/2026

NANUET

NUFSD BOND PROJECT PHASE 5 - HIGHVIEW

- [x] SED#50-01-08-03-0-002-020 (HIGHVIEW ES)
- [ ] SED#50-01-08-03-7-007-002 (Maintenance)
- [ ] SED#50-01-08-03-7-012-004 (OEC)
- [ ] SED#50-01-08-03-0-001-026 (MILLER ES)
- [ ] SED#50-01-08-03-0-004-022 (BARR MS)

Highview Elementary School
24 Highview Ave
Nanuet, NY 10954

OEC Building
135 Convent Rd
Nanuet, NY 10954

Maintenance Building
103 Church St.
Nanuet, NY 10954

Miller Elementary School
50 Blauvelt Rd Unit1
Nanuet, NY 10954

A MacArthur Barr Middle School
143 Church St
Nanuet, NY 10954

KEY PLAN

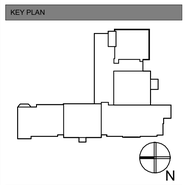

REVISIONS

No.	Description	Date

ISSUED: BID SET

DATE: 06/21/2024

SCALE: 1/2" = 1'-0"

SHEET NAME:
SECOND FLOOR DOMESTIC WATER INATALLATION PLAN

SHEET NUMBER:
HE-P203

ISSUE FOR BID SET

COPYRIGHT © 2023 KSQ ARCHITECTS, PC