ATTACHMENT 'F' - (8 pgs)

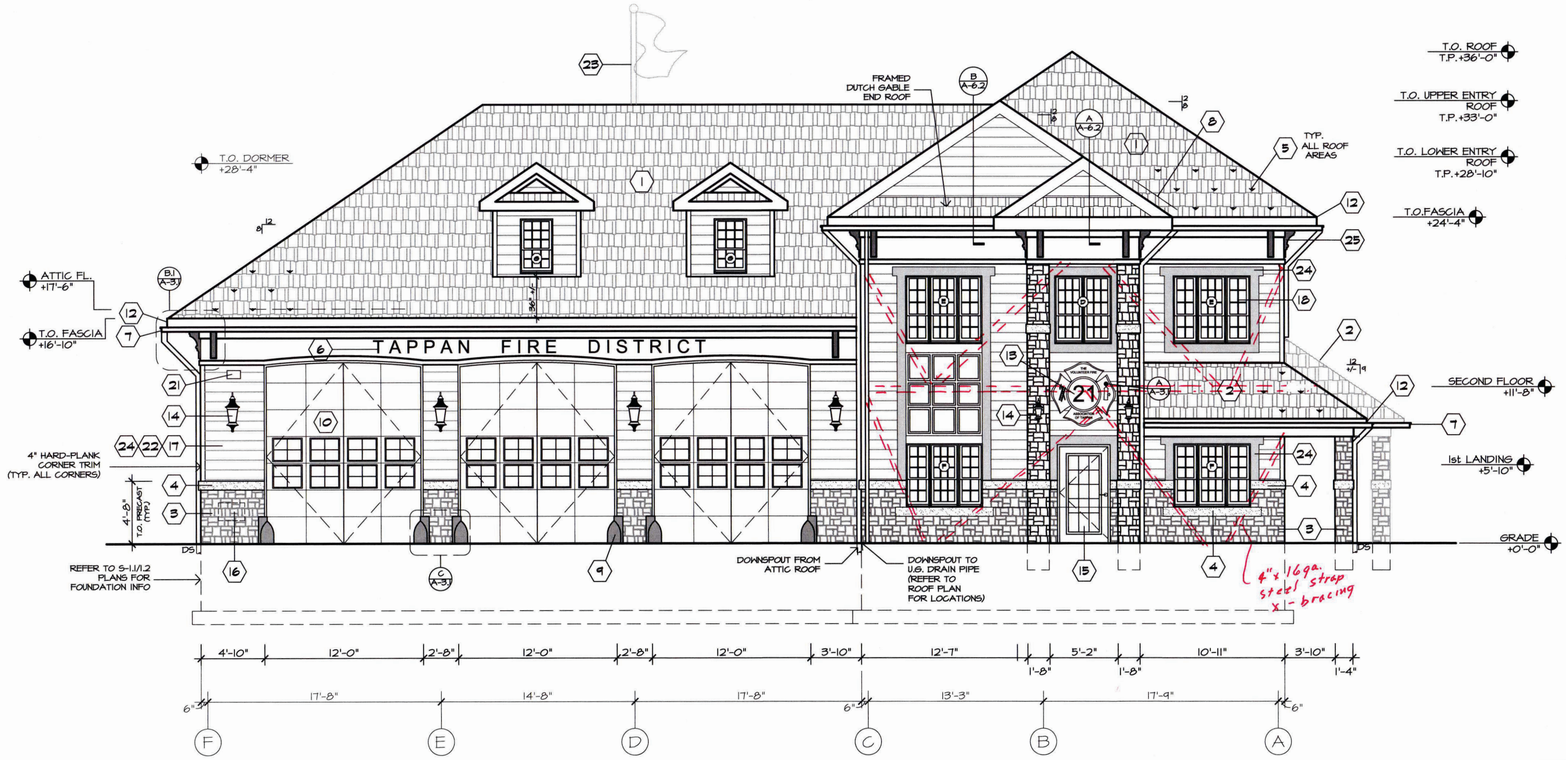

NORTH ELEVATION

SCALE: 3/16" = 1'-0"

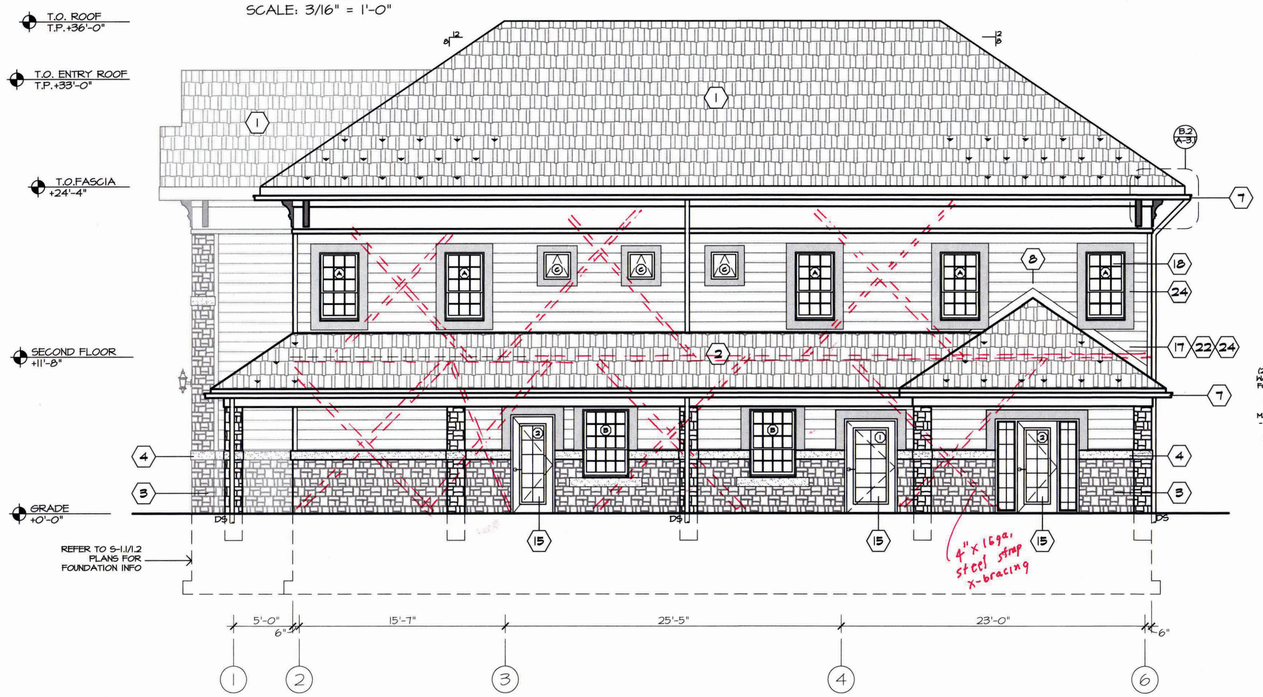

WEST ELEVATION

SCALE: 3/16" = 1'-0"

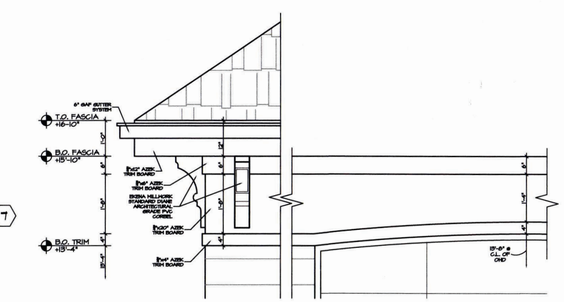

B.1 OVERHANG DETAIL

SCALE: 1/2" = 1'-0"

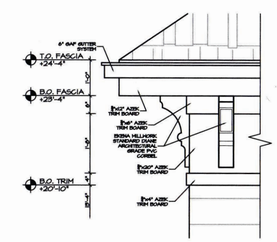

B.2 OVERHANG DETAIL

SCALE: 1/2" = 1'-0"

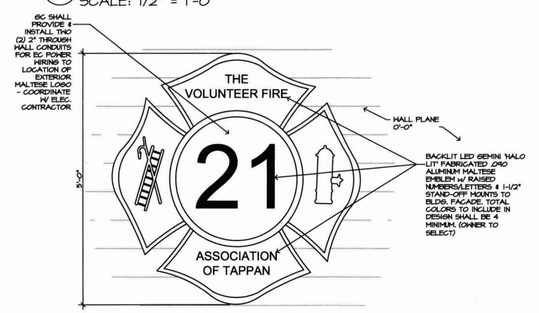

A MALTESE DETAIL

SCALE: 1/2" = 1'-0"

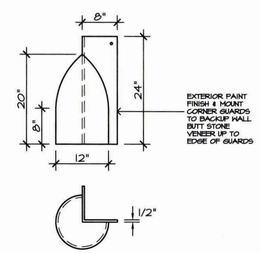

C WHEEL GUARD DETAIL

SCALE: 3/4" = 1'-0"

LEGEND

1. ALL SLOPED ROOF AREAS SHALL BE TRUSS/B*RR SIZED W/ 1/2" HOMASOTE NFGR ROOF DECKING W/ TYVEK PROTEC UNDERLAYMENT FELT AND G.A.F. "TIMBERLINE" ROOFING SHINGLES (OR EQUAL) TYPICAL. COLOR 'SLATE' BY DEFAULT & TO BE CONFIRMED BY OWNER.
2. LOW ROOF AREAS SHALL BE 8" MARINO C JOIST @ 16"O.C. W/ TYVEK PROTEC UNDERLAYMENT FELT AND SAME ROOF SHINGLES AS NOTE 1, W/ 1 1/2" HOMASOTE NFGR DECK.
3. EXTERIOR MASONRY VENEER SHALL BE 60/40 MIXTURE OF SHOULDICE ESTATE STONE 'NORTON' (60%) & SHOULDICE ESTATE STONE 'HAMPTON' (40%), BY KINGS MATERIALS.
4. HORIZONTAL AGGENT BANDS SHALL BE 8"x4"x MAX LENGTH PRECAST 'ROCK-CAST' SELECT STONE SPLIT-FACE FINISH, OR EQUAL. COLOR TO BE SELECTED BY OWNER.
5. COPPER SNOWGUARD BY 'ALPINE SNOW GUARDS' MODEL #40R SNOWGUARD
6. NUMBERS/LETTERS SHALL BE METAL ARTS OR EQUAL (800) 231-8069, CAST METAL LETTERS 18" HIGH x 3/4" DEEP TIMES BD. 210 STYLE WITH # 20 ACRYLIC BAKED ENAMEL FINISH. MOUNT WITH PH15-3 ALUMINUM TUBE SPACERS. VERIFY FINISH COLOR W/ OWNER.
7. GUTTER SHALL BE S.A.F 6" CORNIAL GUTTER SYSTEM W/ 4"X4" DOWNSPOUTS.
8. STRAIGHT LINE FLASHING. TYPICAL ALL ROOF AREAS.
9. 24"x12" HEAVY DUTY CAST IRON WHEEL GUARD BY TRENCH DRAIN SUPPLY (MODEL: R-4186-D6) WITH PAINT FINISH, COLOR SELECTED BY OWNER.
10. NEW 12'-0"W x 14'-0"H FOUR-FOLD APPARATUS BAY DOOR. DOORS SHALL BE BY 'DOOR ENGINEERING' MODEL #FF300, INSULATED DOORS WITH RED FINISH.
11. NEW HOLLOW-METAL INSULATED DOOR & FRAME. PROVIDE 4" HEAD AT MASONRY LOCATIONS.
12. FASCIA & TRIM SHALL BE PRE-PRIMED 5/4X12 W/ .062 ALUM. WRAP (COLOR WHITE)
13. 5'-0" DIA. CUSTOM MALTESE GROSS. REFER TO DETAIL 'A' ON A-3.1. GC TO PROVIDE & INSTALL W/ ASSOCIATED MOUNTS, HARNESS, TRANSFORMER, ETC... TO MAKE COMPLETE. ELECTRICIAN SHALL MAKE FINAL POWER WIRING CONNECTION.
14. DECORATIVE LIGHTS. REFER TO ELECTRICAL DRAWINGS FOR FIXTURE TYPE. MOUNT BOX 8'-0" TO BOTTOM.
15. STOREFRONT ALUM/GLASS DOOR UNITS SHALL BE KAWNEER 350T SERIES. APPLIES TO DOORS 101.1A, 101.1B, 101.2A, 101.2B, 1-02, 1-03 & 1-14.
16. 16" x 24" BRONZE PLAQUE (SIMILAR TO DWG. 0-0 PLAQUE DETAIL) TO BE CAST W/ CUSTOM TEXT/DATE, TO BE CONFIRMED W/ OWNER.
17. COORDINATE ALL EXTERIOR OUTLETS IN MASONRY WITH ELECTRICAL CONTRACTOR.
18. WINDOWS SHALL BE ANDERSEN 400 SERIES 'STORM WATCH' TYPICAL. REFER TO DRAWING A-3.3 FOR ADDITIONAL WINDOW SPEC INFORMATION.
19. WALL PACK LIGHT FIXTURE. REFER TO ELECTRICAL DRAWINGS FOR FIXTURE TYPE.
20. FLOOD LIGHT FIXTURE. REFER TO ELECTRICAL DRAWINGS FOR FIXTURE TYPE.
21. BRASS THRU WALL OVERFLOW SCUPPER TO BE ZURN Z199, PIPED AND INSULATED THRU FROM WALL SCUPPER @ ROOF.
22. THROUGH WALL VENTS/LOUVERS/PIPES/ETC.. COORDINATE M.O. W/ DEDICATED CONTRACTOR. REFER TO M/E/P DRAWINGS AS NECESSARY. VENTS/LOUVERS PROVIDED BY DEDICATED CONTRACTOR & INSTALLED BY GC.
23. 12' VERTICAL WALL-MOUNT FLAG POLE BY EDER FLAG (MODEL: EVHS-12), INSTALLED AT FLAT-ROOF NORTH PARAPET WALL PROVIDED & INSTALLED BY GC (INCLUDE ASSOCIATED BLOCKING AS REQ'D.)
24. HARDIE-PLANK STATEMENT COLLECTION 'SMOOTH' LAP SIDING, SIZE: 8" EXPOSURE. (COLOR: PEARL GRAY) W/ MATCHING CORNER TRIM (WHITE) TYP. ALL BUILDING CORNERS. INCLUDE HARDIE '4/4 NT3 SMOOTH' 6" TRIM BOARDS (COLOR: ARTIC WHITE) AT ALL WINDOWS & DOORS TYPICAL.
25. 5"W X 9"D X 18"/22"H STANDARD 'DIANE' ARCHITECTURAL GRADE PVC CORBEL BY EKENA MILLWORK (OR EQUAL). COLOR/FINISH: RED

NOTE:
- ALL EXTERIOR FINISHES (MASONRY/VENEER/SIDING/TRIM/ETC.) SHALL BE FULLY CLEANED FREE OF STAINS/DEBRIS AS PART OF CLOSE-OUT AT PROJECTS END.
- COORDINATE ALL ROOF GUTTER LEADERS WITH ROOF PLAN & MANUFACTURER FOR LOCATIONS.
- (-) DENOTES DOOR/WINDOW TYPE (REFER TO DOOR/WINDOW ELEVATION DETAILS DWG.)

DATE: ISSUE

07-20-2022 ISSUED FOR BID & PERMIT

SEAL:

SENDLEWSKI ARCHITECTS PC
ARCHITECTS - PLANNERS
215 ROANOKE AVENUE
RIVERHEAD, NY 11901
(631) 727-5352
9 SELENA COURT
WALDEN, NY 12586
(845) 275-8859

PROPOSED NEW FACILITY
TAPPAN FIRE DISTRICT
135 WASHINGTON STREET
TAPPAN, NY 10983

ELEVATIONS (WEST/NORTH)

PROJECT #: 2108.01A

DRAWN BY:

CAD FILE: 2108.01A/P:/BID

DRAWING#:

A-3.1

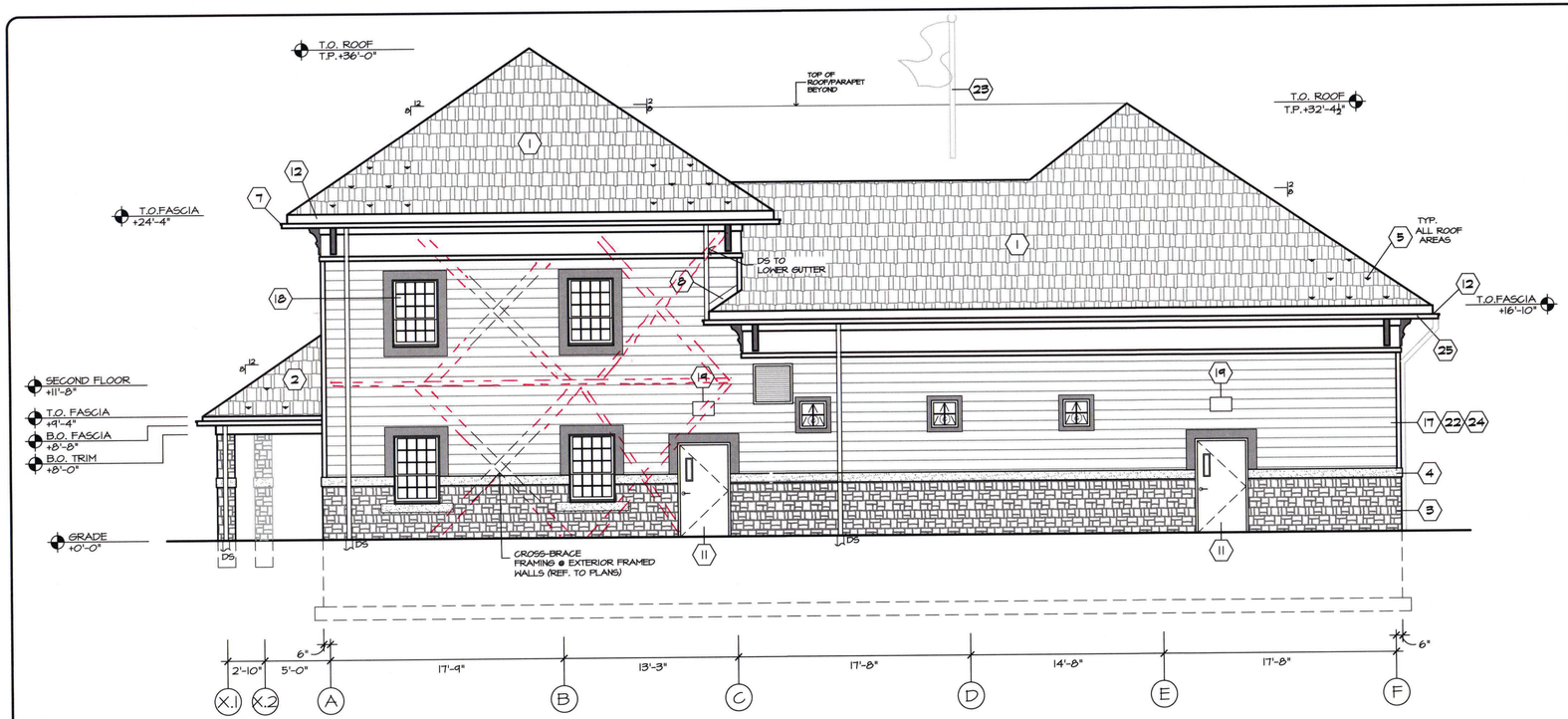

SOUTH ELEVATION

SCALE: 3/16" = 1'-0"

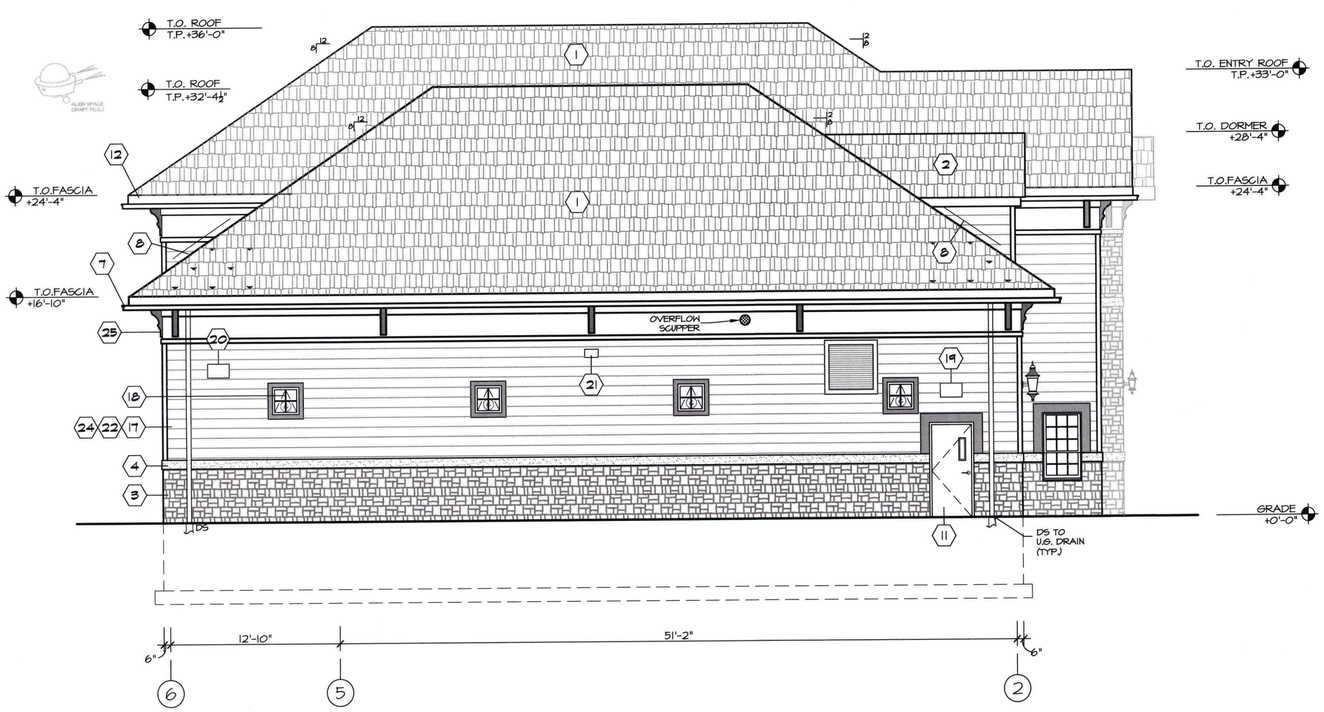

EAST ELEVATION

SCALE: 3/16" = 1'-0"

LEGEND

1. ALL SLOPED ROOF AREAS SHALL BE TRUSS/B*RR SIZED W/ 1½" HOMASOTE NFGR ROOF DECKING W/ TYVEK PROTEC UNDERLAYMENT FELT AND S.A.F "TIMBERLINE" ROOFING SHINGLES (OR EQUAL) TYPICAL. COLOR 'SLATE' BY DEFAULT & TO BE CONFIRMED BY OWNER.
2. LOW ROOF AREAS SHALL BE 8" MARINO C JOIST @ 16"O.C. W/ TYVEK PROTEC UNDERLAYMENT FELT AND SAME ROOF SHINGLES AS NOTE 1, W/ 1 1/2" HOMASOTE NFGR DECK.
3. EXTERIOR MASONRY VENEER SHALL BE 60/40 MIXTURE OF SHOULDICE ESTATE STONE 'NORTON' (60%) & SHOULDICE ESTATE STONE 'HAMPTON' (40%), BY KINGS MATERIALS.
4. HORIZONTAL ACCENT BANDS SHALL BE 8"x4"x MAX LENGTH PRECAST 'ROCK-CAST' SELECT STONE SPLIT-FACE FINISH, OR EQUAL. COLOR TO BE SELECTED BY OWNER.
5. COPPER SNOWGUARD BY "ALPINE SNOW GUARDS" MODEL #4OR SNOWGUARD
6. NUMBERS/LETTERS SHALL BE METAL ARTS OR EQUAL (800) 237-8069, CAST METAL LETTERS 18" HIGH x 3/4" DEEP TIMES BD. 210 STYLE WITH # 20 ACRYLIC BAKED ENAMEL FINISH. MOUNT WITH PMS-3 ALUMINUM TUBE SPACERS. VERIFY FINISH COLOR W/ OWNER.
7. GUTTER SHALL BE S.A.F 6" CORNIAL GUTTER SYSTEM W/ 4"X4" DOWNSPOUTS.
8. STRAIGHT LINE FLASHING. TYPICAL ALL ROOF AREAS.
9. 24"x12" HEAVY DUTY CAST IRON WHEEL GUARD BY TRENCH DRAIN SUPPLY (MODEL: R-4986-DS) WITH PAINT FINISH, COLOR SELECTED BY OWNER.
10. NEW 12'-0"W x 14'-0"H FOUR-FOLD APPARATUS BAY DOOR. DOORS SHALL BE BY 'DOOR ENGINEERING' MODEL #FF300, INSULATED DOORS WITH RED FINISH.
11. NEW HOLLOW-METAL INSULATED DOOR & FRAME. PROVIDE 4" HEAD AT MASONRY LOCATIONS.
12. FASCIA & TRIM SHALL BE PRE-PRIMED 5/4X12 W/ .062 ALUM. WRAP (COLOR WHITE)
13. 5'-0" DIA. CUSTOM MALTESE CROSS. REFER TO DETAIL 'A' ON A-3.1. GC TO PROVIDE & INSTALL W/ ASSOCIATED MOUNTS, HARNESS, TRANSFORMER, ETC... TO MAKE COMPLETE. ELECTRICIAN SHALL MAKE FINAL POWER WIRING CONNECTION.
14. DECORATIVE LIGHTS. REFER TO ELECTRICAL DRAWINGS FOR FIXTURE TYPE. MOUNT BOX 8'-0" TO BOTTOM.
15. STOREFRONT ALUM/GLASS DOOR UNITS SHALL BE KAWNEER 350T SERIES. APPLIES TO DOORS 101.1A, 101.1B, 101.2A, 101.2B, 1-02, 1-03 & 1-14.
16. 16" x 24" BRONZE PLAQUE (SIMILAR TO DWG. 0-0 PLAQUE DETAIL) TO BE CAST W/ CUSTOM TEXT/DATE, TO BE CONFIRMED W/ OWNER.
17. COORDINATE ALL EXTERIOR OUTLETS IN MASONRY WITH ELECTRICAL CONTRACTOR
18. WINDOWS SHALL BE ANDERSEN 400 SERIES 'STORM WATCH' TYPICAL. REFER TO DRAWING A-3.3 FOR ADDITIONAL WINDOW SPEC INFORMATION.
19. WALL PACK LIGHT FIXTURE. REFER TO ELECTRICAL DRAWINGS FOR FIXTURE TYPE.
20. FLOOD LIGHT FIXTURE. REFER TO ELECTRICAL DRAWINGS FOR FIXTURE TYPE.
21. BRASS THRU WALL OVERFLOW SCUPPER TO BE ZURN Z199, PIPED AND INSULATED THRU FROM WALL SCUPPER @ ROOF.
22. THROUGH WALL VENTS/LOUVERS/PIPES/ETC., COORDINATE M.O. W/ DEDICATED CONTRACTOR. REFER TO M/E/P DRAWINGS AS NECESSARY. VENTS/LOUVERS PROVIDED BY DEDICATED CONTRACTOR & INSTALLED BY GC.
23. 12' VERTICAL WALL-MOUNT FLAG POLE BY EDER FLAG (MODEL: EVW5-12), INSTALLED AT FLAT-ROOF NORTH PARAPET WALL PROVIDED & INSTALLED BY GC (INCLUDE ASSOCIATED BLOCKING AS REQ'D.)
24. HARDIE-PLANK STATEMENT COLLECTION 'SMOOTH' LAP SIDING, SIZE: 8" EXPOSURE. (COLOR: PEARL GRAY) W/ MATCHING CORNER TRIM (WHITE) TYP. ALL BUILDING CORNERS. INCLUDE HARDIE 4/4 NT3 SMOOTH 6" TRIM BOARDS (COLOR: ARTIC WHITE) AT ALL WINDOWS & DOORS TYPICAL.
25. 5"H X 9"D X 18"/22"H STANDARD 'DIANE' ARCHITECTURAL GRADE PVC CORBEL BY EKENA MILLWORK (OR EQUAL). COLOR/FINISH: RED

NOTE:

- ALL EXTERIOR FINISHES (MASONRY/VENEER/SIDING/TRIM/ETC.) SHALL BE FULLY CLEANED FREE OF STAINS/DEBRIS AS PART OF CLOSE-OUT AT PROJECTS END.
- COORDINATE ALL ROOF GUTTER LEADERS WITH ROOF PLAN & MANUFACTURER FOR LOCATIONS.

(-) DENOTES DOOR/WINDOW TYPE (REFER TO DOOR/WINDOW ELEVATION DETAILS DWG.)

DATE:	ISSUE
07-20-2022	ISSUED FOR BID & PERMIT

SEAL:

SENDLEWSKI ARCHITECTS PC
ARCHITECTS - PLANNERS
215 ROANOKE AVENUE
RIVERHEAD, NY 11901
(631) 727-5352
9 SELENA COURT
WALDEN, NY 12586
(845) 275-8859

PROPOSED NEW FACILITY
TAPPAN FIRE DISTRICT
135 WASHINGTON STREET
TAPPAN, NY 10983

ELEVATIONS (EAST/NORTH) & DETAILS

PROJECT #: 2108.01A

DRAWN BY:

CAD FILE: 2108.01A/P:/BID

DRAWING#:

A-3.2

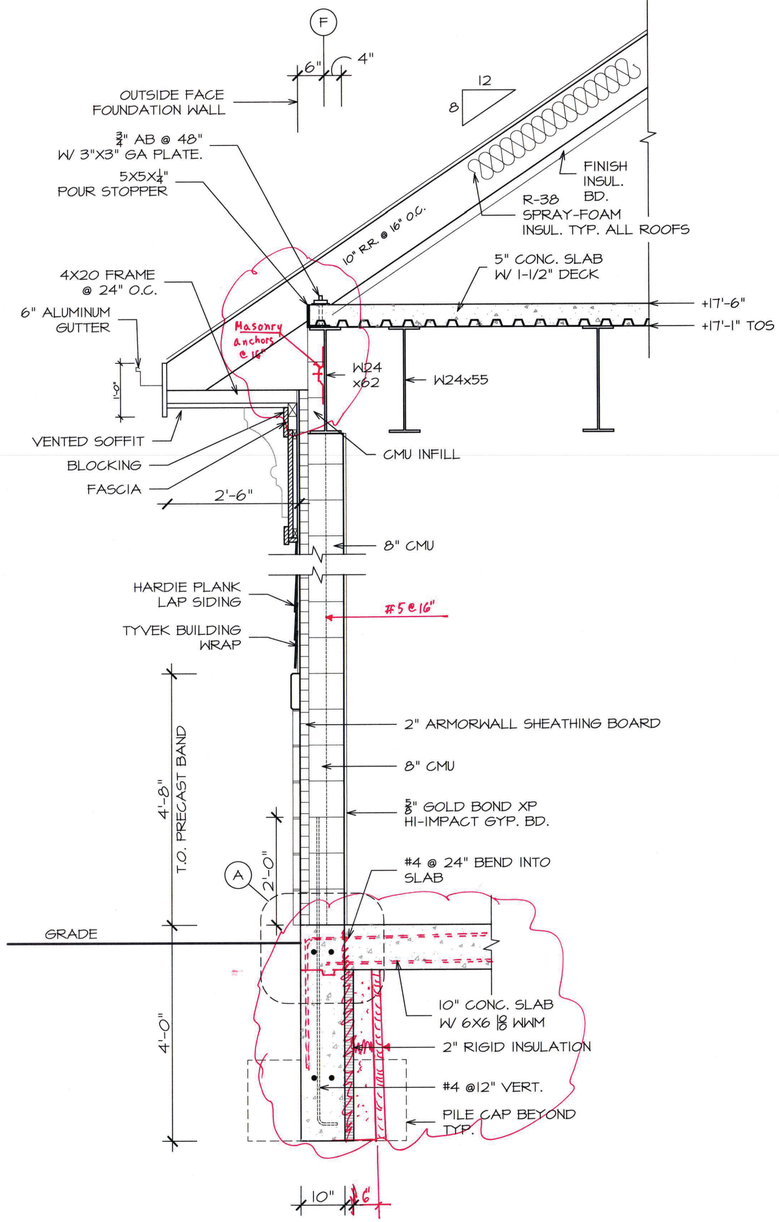

A WALL SECTION
SCALE: 3/4" = 1'-0"

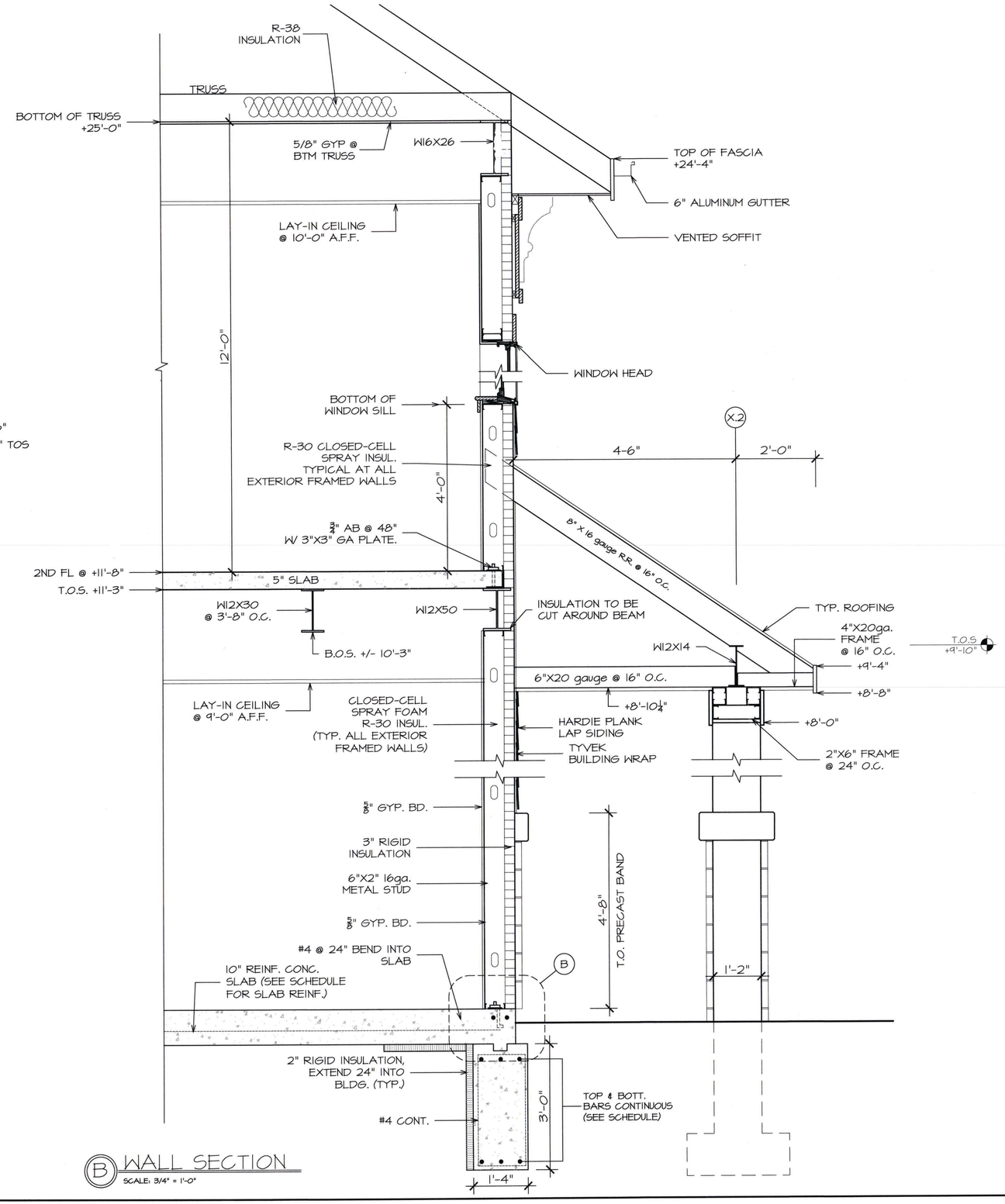

B WALL SECTION
SCALE: 3/4" = 1'-0"

DATE: ISSUE

07-20-2022 ISSUED FOR BID & PERMIT

SEAL:

SENDLEWSKI ARCHITECTS PC
ARCHITECTS - PLANNERS
215 ROANOKE AVENUE
RIVERHEAD, NY 11901
(631) 727-5352
9 SELENA COURT
WALDEN, NY 12586
(845) 275-8859

PROPOSED NEW FACILITY
TAPPAN FIRE DISTRICT
135 WASHINGTON STREET
TAPPAN, NY 10983

WALL SECTION & DETAIL

PROJECT #: 2108.01A

DRAWN BY:

CAD FILE: 2108.01A/P:/BID

DRAWING#:

A-6.1

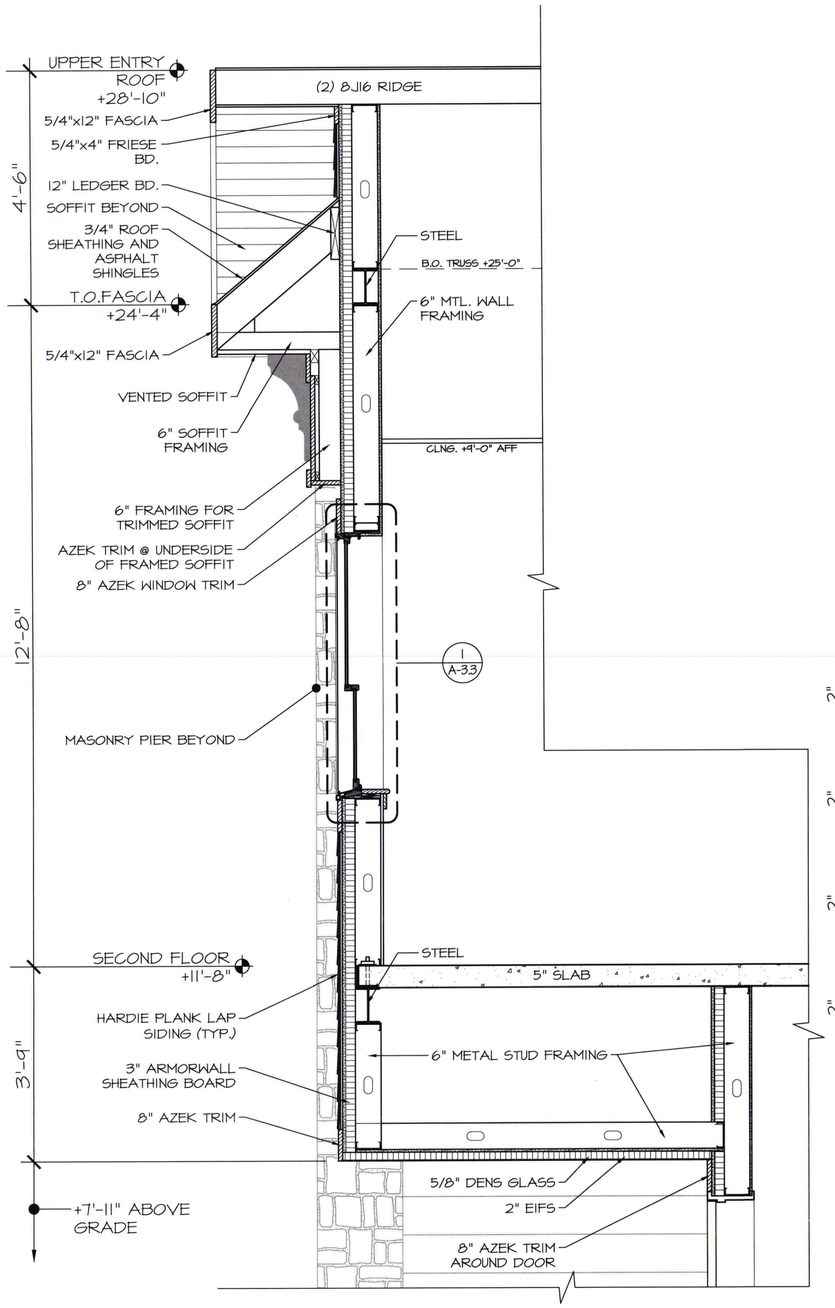

A WALL SECTION THRU DUTCH GABLE

SCALE: 3/4" = 1'-0"

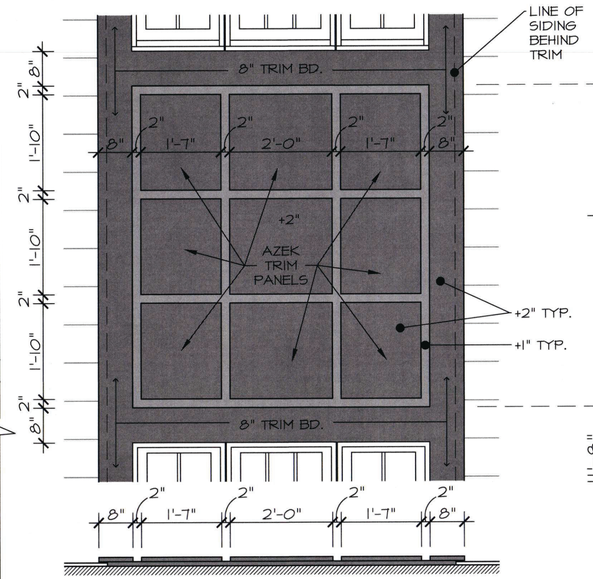

1 RAISED PANEL DETAIL

SCALE: 3/4" = 1'-0"

NOTE: DATUM OF RELIEF ELEVATIONS IS +0'-0" FROM WALL SHEATHING.

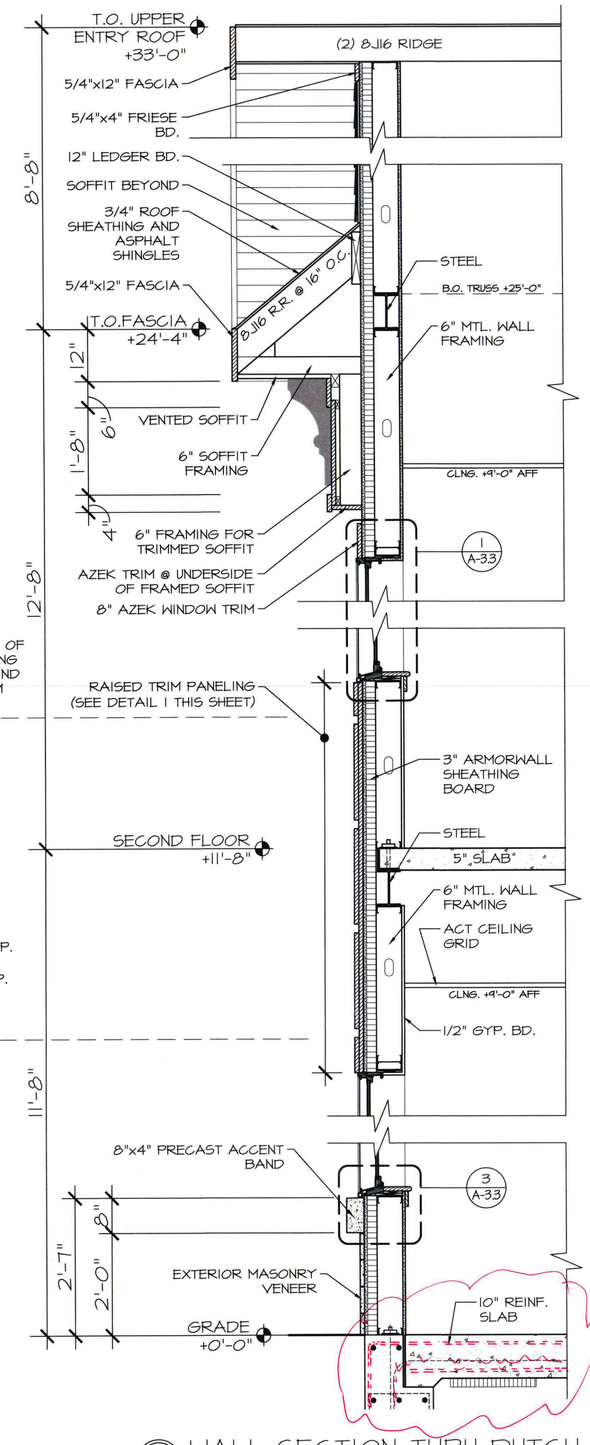

B WALL SECTION THRU DUTCH GABLE

SCALE: 3/4" = 1'-0"

DATE: ISSUE

07-20-2022 ISSUED FOR BID & PERMIT

SEAL:

SENDLEWSKI ARCHITECTS PC
ARCHITECTS - PLANNERS
215 ROANOKE AVENUE
RIVERHEAD, NY 11901
(631) 727-5352
9 SELENA COURT
WALDEN, NY 12586
(845) 275-8859

PROPOSED NEW FACILITY
TAPPAN FIRE DISTRICT
135 WASHINGTON STREET
TAPPAN, NY 10983

WALL SECTION & DETAIL

PROJECT #: 2108.01A

DRAWN BY:

CAD FILE: 2108.01A/P:/BID

DRAWING#:

A-6.2

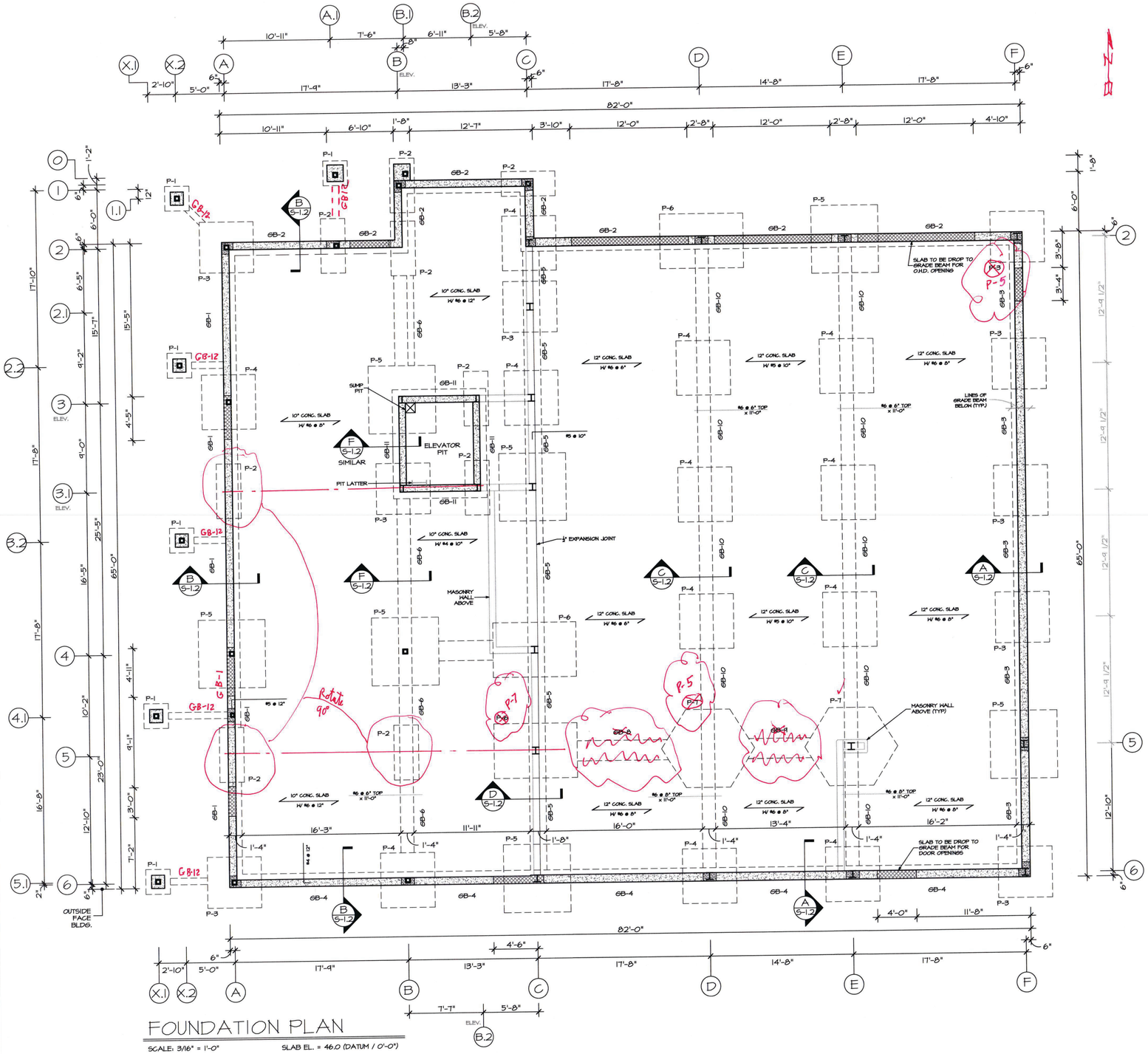

FOUNDATION PLAN

SCALE: 3/16" = 1'-0" SLAB EL. = 46.0 (DATUM / 0'-0")

NOTES:

1. HEAVY DUTY 20-MIL VAPOR BARRIER SHALL BE PROVIDED & INSTALLED UNDER ALL CONCRETE SLABS.
2. REFER TO TEST HOLES PROVIDED IN SITE DRAWINGS FOR SOIL CLASSIFICATIONS & ANTICIPATED DEPTHS. RESULTS WITHIN PROVIDED TEST HOLES SHALL BE CONSIDERED APPLICABLE TO ALL OTHER AREAS OF THE SITE.
3. BID DEPTH OF HELICAL PILES SHALL BE 20'-0" FROM DATUM ELEV. 44.0
4. UNIT PRICE IS TO BE PROVIDED IN BID FOR EXTRA/CREDIT FOR DIFFERENCE IN ACTUAL DEPTH COMPARED TO THE 25'-0"
5. COORDINATE UNDER SLAB PIPING HANGERS WITH PLUMBING CONTRACTOR.
6. GC SHALL VERIFY ELEVATOR PIT CLEAR DIMENSIONS W/ APPROVED MANUFACTURER PRIOR TO FORMING/POURING & STEEL WORK.
7. INCLUDE SLAB EXPANSION JOINTS FOR ALL MAIN COLUMN LINES. VERIFY REQUIRED LOCATIONS PRIOR TO PLACEMENT.

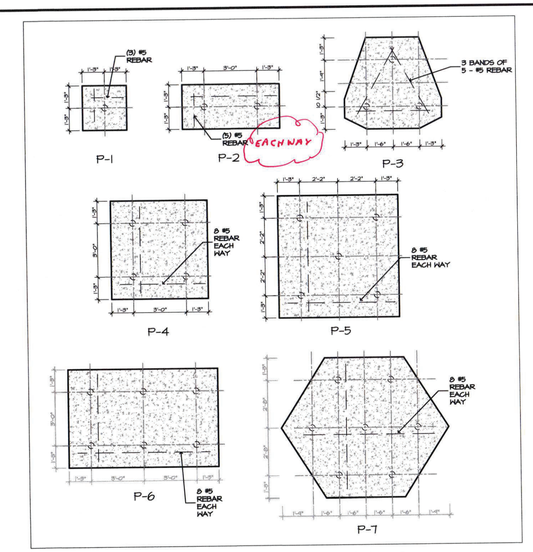

PILE CAP DETAILS

SCALE: 1/4" = 1'-0"

GRADE BEAM SCHEDULE				
DESIGNATION	SIZE	TOP STEEL	BOTTOM STEEL	#3 STIRRUPS @ 12"
GB - 1	16"x36"	3 - #7	3 - #6	#3 STIRRUPS @ 12"
GB - 2	16"x36"	3 - #5	3 - #5	#3 STIRRUPS @ 12"
GB - 3	16"x36"	3 - #6	3 - #7	#3 STIRRUPS @ 12"
GB - 4	16"x36"	3 - #7	3 - #7	#3 STIRRUPS @ 12"
GB - 5	20"x36"	3 - #7	3 - #6	#3 STIRRUPS @ 12"
GB - 6	16"x36"	3 - #6	3 - #6	#3 STIRRUPS @ 12"
GB - 7	16"x36"	3 - #6	3 - #6	#3 STIRRUPS @ 12"
GB - 8	16"x36"	4 - #4	4 - #4	#3 STIRRUPS @ 12"
GB - 9	16"x36"	4 - #4	3 - #4	#3 STIRRUPS @ 12"
GB - 10	16"x36"	4 - #5	3 - #4	#3 STIRRUPS @ 12"
GB - 11	16"x66"	4 - #5	3 - #4	#3 STIRRUPS @ 12"
GB-12	12"x12	2-#5	2-#5	#3 Stirrups @ 12"

HELICAL PILE NOTES:

1. ALL PILES SHALL BE PATENTED HILICAL PILES AND APPURTANCES AS FURNISHED BY PREMIUM TECHNICAL SERVICES OR EQUAL.
2. HELICAL PILE LEAD SECTIONS SHALL BE MODEL SS175 WITH A 1-3 /4" DIAMETER ROUND SHAFT AND (1) 10", (1) 12"AND (1) 14" DIAMETER HELIX. LEAD SECTIONS SHALL BE 5.5' LONG. HELIX PILE EXTENSION MAY BE 5', 7', OR 10' LONG DEPENDING ON VERTICAL CLEARANCE.
3. HELICAL PILES, EXTENSIONS AND APPURTANCES SHALL BE HOT DIPPED GALVANIZED STEEL IN ACCORDANCE WITH ASTM A153.
4. ALL PILE INSTALLATION OPERATIONS SHALL BE SUPERVISED BY A N.Y.S. LICENSED ENGINEER COMMISSIONED BY THE PILE INSTALLER. THE INSPECTOR SHALL KEEP A COMPLETE RECORD OF THE PILE INSTALLATION OPERATION.
5. HELICAL PILES SHALL BE INSTALLED THROUGH ALL FILL, BOG, SILT, ETC. AND TO PENETRATE A MINIMUM DEPTH 10' INTO GOOD GRANULAR BEARING MATERIAL , AND TO A MINIMUM CAPACITY OF 15 TONS (WORKING LOAD).
6. HELICAL PILES SHALL BE INSTALLED AS SHOWN ON THE ENGINEERS PLAN. ALL CHANGES IN PILE LOCATION MUST BE APPROVED BY THE DESIGN ENGINEER.
7. IF UNDERGROUND OBSTRUCTIONS ARE ENCOUNTERED DURING INSTALLATION, THE CONTRACTOR SHALL HAVE THE OPTION OF REMOVING THE OBSTRUCTION, IF POSSIBLE, OR RELOCATING THE PILE WITH THE DESIGN ENGINEERS APPROVAL. THE LATTER OPTION MAY REQUIRE THE RELOCATION OF ADJACENT PILES.
8. THE HELICAL PILE SHALL BE CONNECTED TO THE STRUCTURE USING A PTS APPROVED STEEL BRACKET OR CAP PLATE AS THE CASE MAY BE SHOWN ON DESIGN ENGINEERS PLAN. THESE CONNECTION DEVICES SHALL BE CAPABLE OF SAFELY TRANSFERRING THE STRUCTURAL LOADS TO THE HELICAL PILE.
9. WRITTEN INSTALLATION RECORDS SHALL BE MAINTAINED FOR EACH HELICAL PILE. THESE RECORDS SHALL INCLUDE BUT ARE NOT LIMITED TO THE FOLLOWING:

   A. PROJECT NAME AND/OR LOCATION.

   B. NAME OF CONTRACTORS FOREMAN OR REPRESENTATIVE WHO WITNESSED THE INSTALLATION

   C. DATE AND TIME OF INSTALLATION.

   D. LOCATION AND REFERENCE NUMBER OF EACH PILE.

   E. DESCRIPTION OF LEAD SECTION AND EXTENSIONS INSTALLED.

   F. OVERALL DEPTH OF INSTALLATIONS REFERENCED FROM THE BOTTOM OF GRADE BEAM OR PILE CAP.

   G. TORQUE READING FOR THE LAST THREE FEET OF INSTALLATION IF PRACTICAL. IN LIEU OF THIS REQUIREMENT, THE TERMINAL TORQUE SHALL BE RECORDED AS A MINIMUM.

   H. ANY OTHER RELEVANT INFORMATION RELATING TO THE INSTALLATION.
10. THE INSTALLERS N.Y.S LICENSED PROFESSIONAL ENGINEER MUST CERTIFY THE PILE INSTALLATION RECORD.

DATE: ISSUE

07-20-2022 ISSUED FOR BID & PERMIT

SEAL:

SENDLEWSKI ARCHITECTS PC
ARCHITECTS - PLANNERS
215 ROANOKE AVENUE
RIVERHEAD, NY 11901
(631) 727-5352
9 SELENA COURT
WALDEN, NY 12586
(845) 275-8859

PROPOSED NEW FACILITY
TAPPAN FIRE DISTRICT
135 WASHINGTON STREET
TAPPAN, NY 0983

FOUNDATION PLAN & DETAILS

PROJECT #: 2108.01A

DRAWN BY:

CAD FILE: 2108.01A/F:/BID

DRAWING#: S-1.1

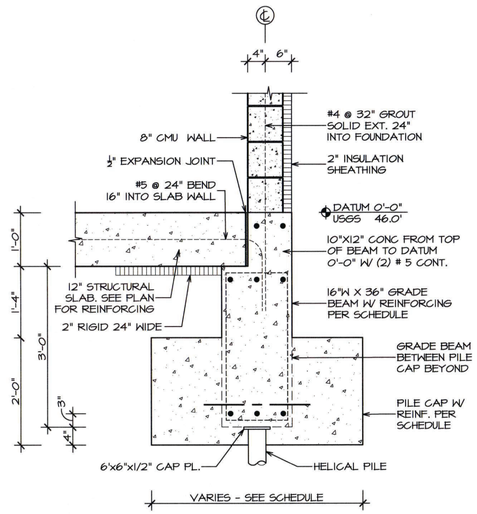

PERIMETER GRADE BEAM/WALL DETAIL EAST OF COL. C (APPARATUS AREA)

(A) SCALE: 3/4" = 1'-0"

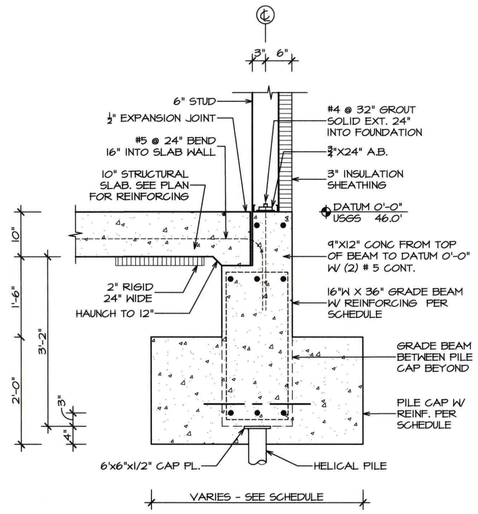

PERIMETER GRADE BEAM/WALL DETAIL WEST OF COL. C (OCCUPIED AREAS)

(B) SCALE: 3/4" = 1'-0"

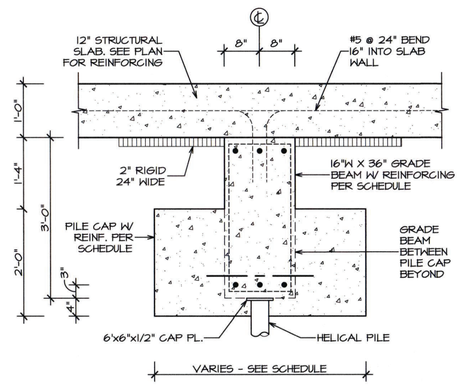

GRADE BEAM @ COLS. D&E

(C) SCALE: 3/4" = 1'-0"

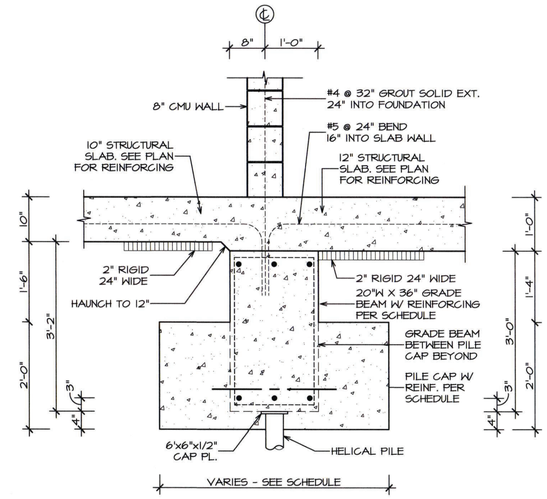

GRADE BEAM @ COL. C

(D) SCALE: 3/4" = 1'-0"

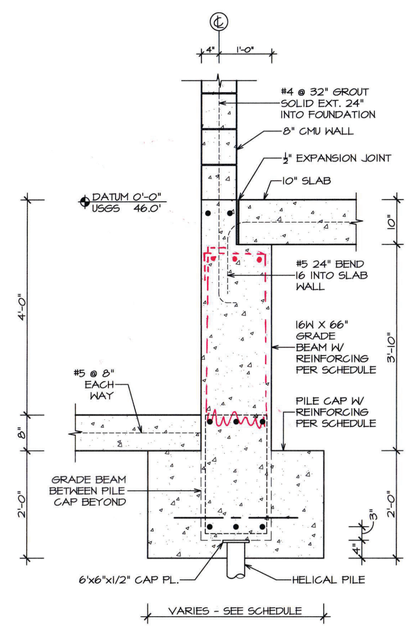

GRADE BEAM @ ELEVATOR

(E) SCALE: 3/4" = 1'-0"

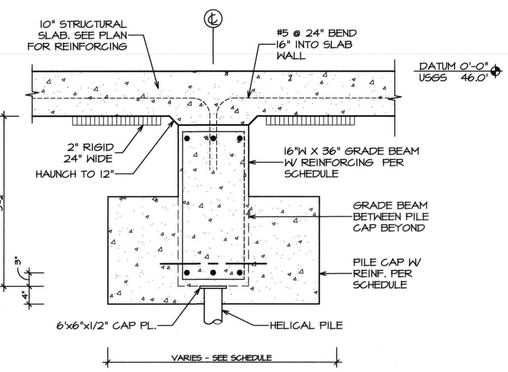

GRADE BEAM @ COL. B

(F) SCALE: 3/4" = 1'-0"

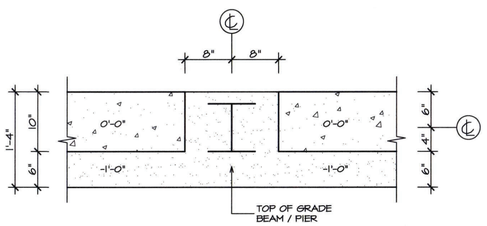

GRADE BEAM PLAN

SCALE: 1" = 1'-0"

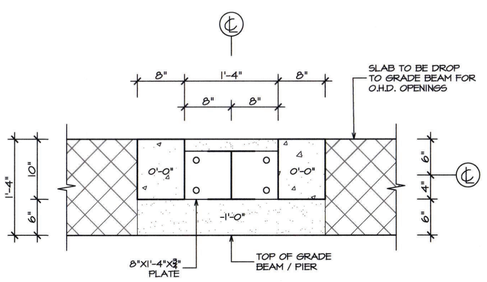

GRADE BEAM PLAN @ O.H.D.

SCALE: 1" = 1'-0"

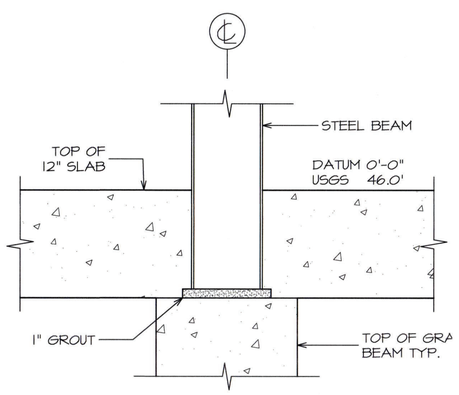

GRADE BEAM ELEV.

SCALE: 1-1/2" = 1'-0"

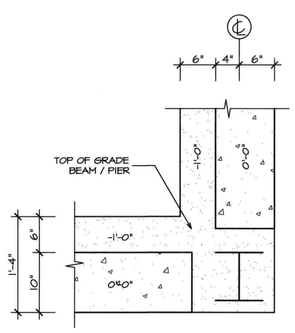

GRADE BEAM PLAN @ CORNERS

SCALE: 1" = 1'-0"

DATE:	ISSUE
07-20-2022	ISSUED FOR BID & PERMIT

SEAL:

SENDLEWSKI ARCHITECTS PC
ARCHITECTS - PLANNERS
215 ROANOKE AVENUE
RIVERHEAD, NY 11901
(631) 727-5352
9 SELENA COURT
WALDEN, NY 12586
(845) 275-8859

PROPOSED NEW FACILITY
TAPPAN FIRE DISTRICT
135 WASHINGTON STREET
TAPPAN, NY 10983

FOUNDATION PIER DETAILS

PROJECT #: 2108.01A

DRAWN BY:

CAD FILE: 2108.01A/P:/BID

DRAWING#:

S-1.2

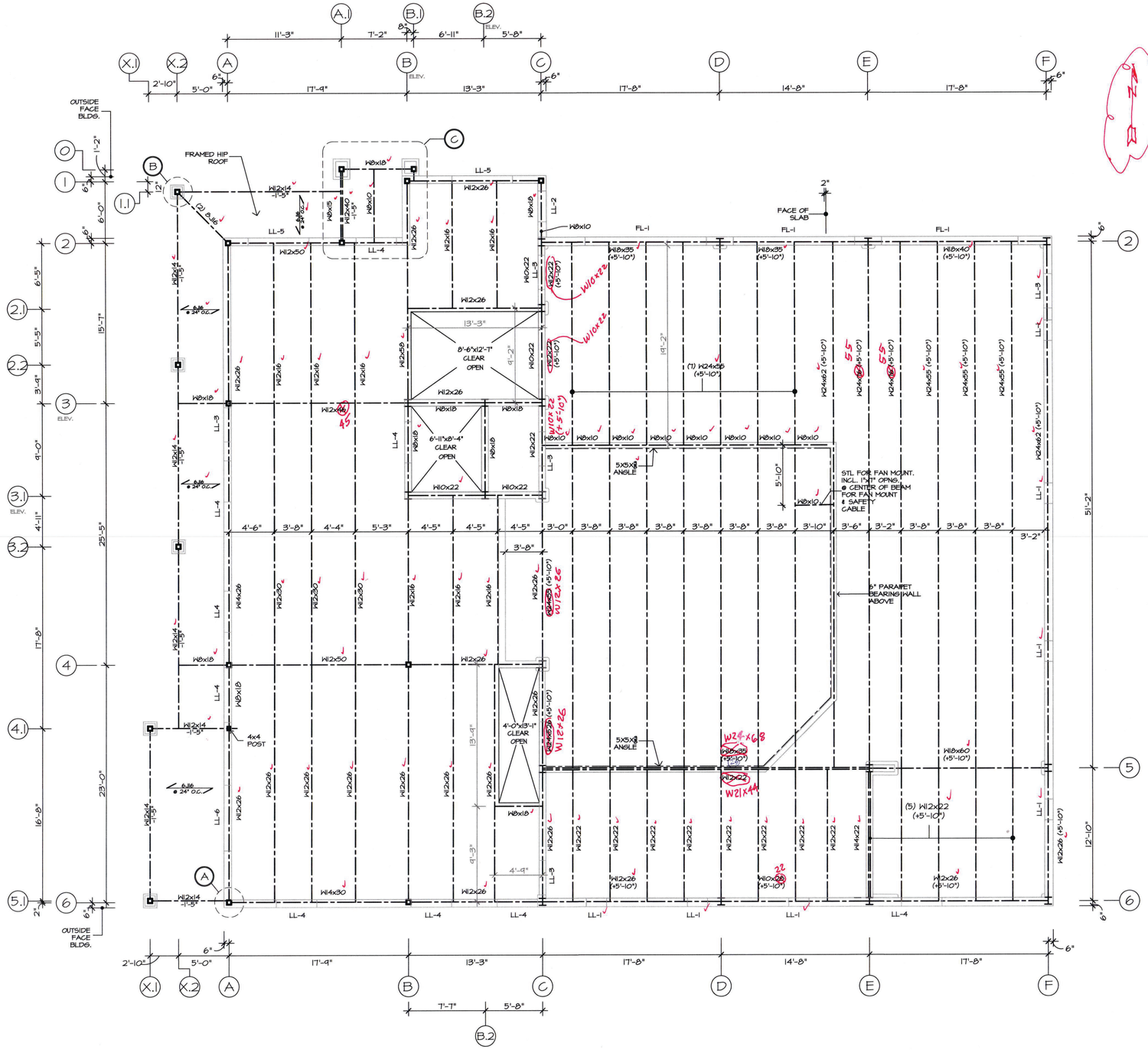

SECOND FLOOR FRAMING PLAN

SCALE: 3/16" = 1'-0"

NOTES:
1. TOP OF STEEL ELEVATION +11'-3" UNLESS NOTED OTHERWISE USING +11'-3" AS REFERENCE. ALL ELEVATIONS ARE FROM FIRST FLOOR DATUM ELEVATION 0'-0".
2. SECOND FLOOR DECK TO BE 5" CONC. SLAB ON 1 ½" DEEP 22-GAUGE 'B-LOK' COMPOSITE FLOOR DECK W/ 6"x6"-W4.0/W4.0 WWM.
3. ATTIC FLOOR DECK TO BE 5" CONC. SLAB ON 1 ½" DEEP 22-GAUGE 'B-LOK' COMPOSITE FLOOR DECK W/ 6"x6"-W4.0/W4.0 WWM.

LOAD NOTES:
1. LL 100#/SF + 15#/SF DL USED FOR ALL ATTIC AREAS OVER 5'-0" HIGH.
2. 50#/SF LL + 20#/SF DL PROVIDED FOR FLAT ROOF AREAS.

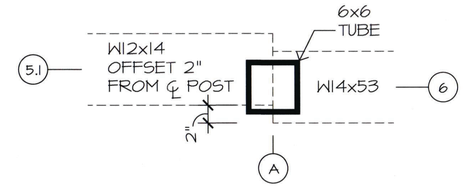

A POST DETAIL

SCALE: 1 1/2" = 1'-0"

LINTEL SCHEDULE	
MARK	SIZE
LL-1	2 ∠'s 3½ x 3½ x 5/16"
LL-2	2 ∠'s 3½ x 3½ x 5/16
LL-3	2 ∠'s 3½ x 3½ x 5/16
LL-4	2 ∠'s 3½ x 4 x 5/16
LL-5	2 ∠'s 5 x 3½ x 5/16
FL-1	

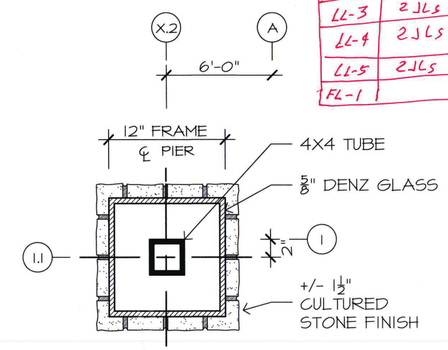

B PIER DETAIL

SCALE: 1 1/2" = 1'-0"

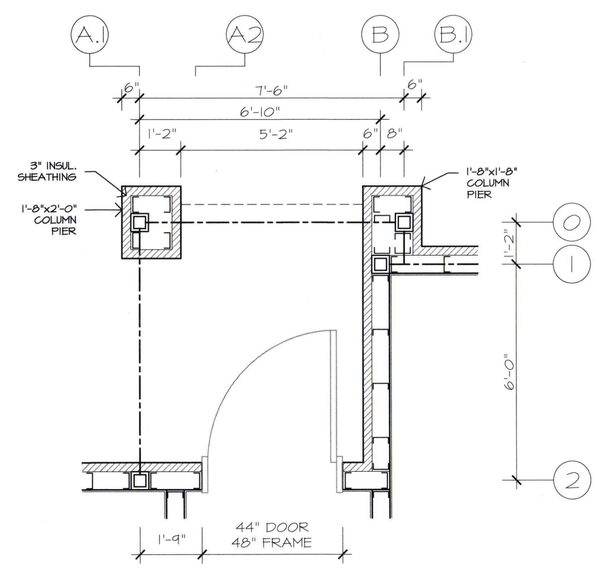

C PIER DETAIL

SCALE: 1 1/2" = 1'-0"

DATE: ISSUE
07-20-2022 ISSUED FOR BID & PERMIT

SEAL:

SENDLEWSKI ARCHITECTS PC
ARCHITECTS - PLANNERS
215 ROANOKE AVENUE
RIVERHEAD, NY 11901
(631) 727-5352
9 SELENA COURT
WALDEN, NY 12586
(845) 275-8859

PROPOSED NEW FACILITY
TAPPAN FIRE DISTRICT
135 WASHINGTON STREET
TAPPAN, NY 10983

SECOND FLOOR/ATTIC FRAMING PLAN & DETAILS

PROJECT #: 2108.01A

DRAWN BY:

CAD FILE: 2108.01A/P:/BID

DRAWING#:

S-2

COLUMN SCHEDULE

COL. NO. / TIER	A-2	A-3	A-4	A-4.1	A-6	A1-0	A1-2	B-1	B-3 & B-3.1 (ELEV.)	B-4	B-6	B-8	B2-3 (ELEV.)	B2-3.1 (ELEV.)	C-1	C-2	C-2.1	C-3	C-3.1	C-4	C-5	C-6	D-2	D-6	E-2	E-5	E-6	F-2	F-5	F-6	COVERED PATIO X1-5.1	X1-4.1	X2-3.2	X2-2.2	X2-1.1
UPPER TRUSS ROOF +25'-0"																																			
UPPER ATTIC/ FLAT ROOF FLOOR +17'-6"																																			
2ND. FLR. +11'-8"	6"x6"x1/4"	6"x6"x1/4"	6"x6"x1/4"	4"x4"x1/4"	6"x6"x1/4"	6"x6"x1/4"	6"x6"x1/4"	6"x6"x1/4"	WB x 31	6"x6"x1/4"	6"x6"x1/4"	6"x6"x1/4"	WB x 31	WB x 31	6"x6"x1/4"	WB x 31	WB x 31	WB x 31	WB x 31	WB x 31	WB x 31	WB x 31	WB x 31	WB x 31	WB x 31	WB x 31	WB x 31	WB x 31	WB x 31	WB x 31	4"x4"x1/4"	4"x4"x1/4"	4"x4"x1/4"	4"x4"x1/4"	4"x4"x1/4"
1ST. FL. +0'-0" (DATUM)																																			
BASE PLATE SEE DETAILS	B	C	C	E	B	E	C	B	F	C	C	E	F	F	B	A	A	A	A	A	A	A	A	A	A	A	A	A	A	A	E	E	E	E	E

UPPER TRUSS: 1'-5"; 5"; 5"; 1'-10"; 1"; 1"

PORCH ROOF STEEL +9'-10"

NOTES:

1. BOTTOM ELEV. OF ALL COLUMNS BELOW DATUM TO BE -1" + 1" NON-SHRINK GROUT (UNLESS NOTED OTHERWISE)
2. WELDED MASONRY ANCHORS ON ALL COLUMNS @ CMU SHALL BE FULL HEIGHT TYPICAL. COORDINATE W/ MASON FOR ANCHOR TIE INSTALLS.
3. ALL TUBE COLUMNS TO BE Fy = 46 ksi
4. ALL 'W' COLUMNS 50 ksi UNLESS NOTED OTHERWISE

BASEPLATE DETAILS

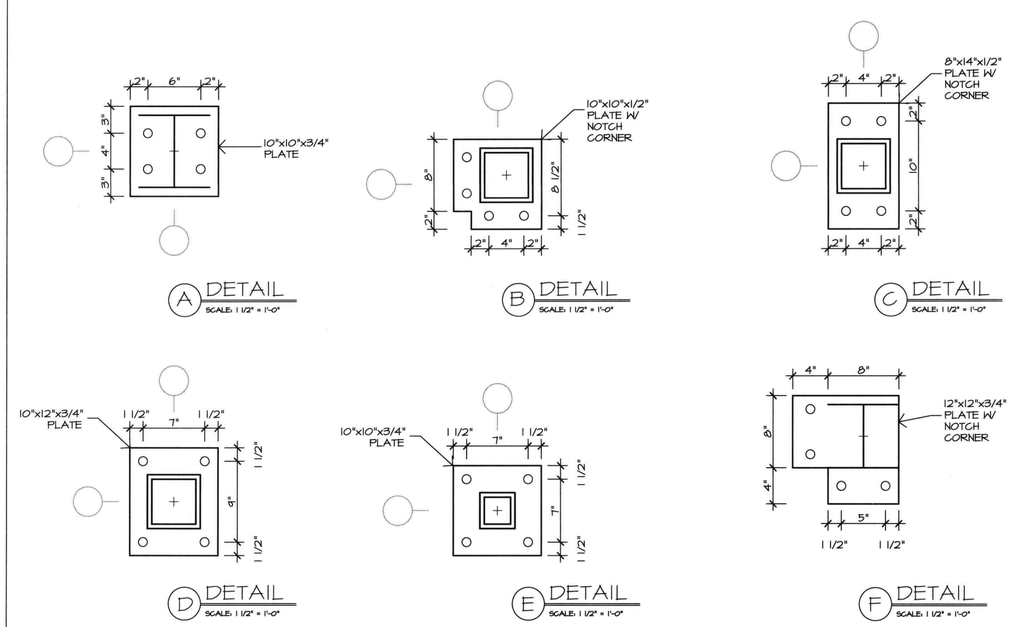

TAPPAN FD - DESIGN CRITERIA:

DESIGN LOADS:

GROUND SNOW LOAD = 36 PSF
SNOW LOAD IMPORTANCE FACTOR I_s = 1.2
THERMAL FACTOR C = 1.0
FLAT ROOF SNOW LOAD = 25.2 PSF
ROOF DEAD LOAD = 25 PSF
ROOF LIVE LOAD = 20 PSF
FLOOR (LL) = 100 PSF
FLOOR (DL) = 50/105 PSF
(DRIFTING LOADS IN ACCORDANCE WITH ASCE 7)
WIND (128 MPH) = 42 PSF
WIND IMPORTANCE FACTOR I_w = 1.15
EXPOSURE "B"
INTERNAL PRESSURE COEFFICIENT = ± .18
DESIGN WIND PRESSURE FOR COMPONENTS & CLADDING = +34 PSF; -43 PSF
OCCUPANCY CATEGORY IV

SEISMIC DESIGN PARAMETERS:

1. I_E = 1.50; SEISMIC USE GROUP "IV"
2. S_S = .299
   S_1 = .062
3. SITE CLASS "D"
4. S_{DS} = .254
   S_{D1} = .062
5. SEISMIC DESIGN CATEGORY "C"
6. SEISMIC COEFFICENTS FOR ORDINARY REINFORCED MASONRY SHEARWALLS
   A. R = 2
   B. Ω0 = 2.5
   C. Cd = 2
   D. REDUNDANCY COEFFICIENT = 1.0
   E. FUNDAMENTAL PERIOD = .41 SEC.
   F. C_S = .113
7. SEISMIC COEFFICENTS FOR LIGHT-FRAME (COLD-FORMED STEEL) WALL SYSTEMS USING FLAT STRIP BRACING
   A. R = 4
   B. Ω0 = 2
   C. CD = 3.5
   D. REDUNDANCY COEFFICIENT = 1.0
   E. FUNDAMENTAL PERIOD = .51 SEC.
   F. C_S = .046
8. DESIGN BASE SHEAR = 95.6 KIPS

SPECIAL INSPECTIONS REQUIRED:

1. STEEL
   A. MATERIAL VERIFICATION OF STRUCTURAL STEEL
   B. HIGH STRENGTH BOLTS
   C. WELDING
   D. JOINT DETAILS AS CONSTRUCTED
2. CONCRETE
   A. REINFORCING STEEL
   B. ANCHOR BOLTS
   C. PLACEMENT & CURING
   D. SAMPLING FRESH CONCRETE
3. MASONRY
   A. MORTAR & JOINTS
   B. REINFORCING
   C. HOT & COLD WEATHER PROTECTION
   D. GROUTING
4. PILE FOUNDATIONS
   A. CONTINUOUS SPECIAL INSPECTIONS DURING INSTALLATION.

* SOIL BEARING CAPACITY (PER TEST BORIONS REPORT)

GENERAL STRUCTURAL NOTES

FOUNDATION:

1. ALL PILE CAP FOOTINGS SHALL REST ON HELICAL PILES. SEE DETAILS DWG S-1

2. KEEP FOOTING BOTTOMS WELL DRAINED UNTIL FOOTINGS ARE IN PLACE, PUMP AS REQUIRED.

3. CONSTRUCTION JOINTS IN FOUNDATION WALLS SHALL BE NO MORE THAN 50 FEET APART AND NO LESS THAN 4'- 0" FROM ANY PIER. REINFORCEMENT SHALL BE CONTINUOUS THROUGH CONSTRUCTION JOINTS. DO NOT USE HORIZONTAL CONSTRUCTION JOINTS.

4. SLABS ON GRADE SHALL BE PLACED BY STRIP PLACING METHOD (MAX. WIDTH 30 FT. BY INFINITE LENGTH) WITH CONTROL JOINTS (SAW CUT) MAX. 30'- 0" O.C.; CONSTRUCTION JOINTS SHALL BE LOCATED ALONG LENGTH OF PLACEMENT AND AT ENDS OF PLACEMENT.

CONCRETE:

1. ALL CONCRETE WORK SHALL CONFORM TO ACI 301-16; EXTERIOR CONCRETE WORK SHALL BE 4000 PSI AIR-ENTRAINED. SLABS ON GRADE SHALL BE NORMAL WEIGHT CONCRETE.

2. ALL REINFORCEMENT SHALL BE DEFORMED TYPE INTERMEDIATE GRADE NEW BILLET STEEL CONFORMING TO ASTM A-615 GRADE 60.

3. TEMPERATURE REINFORCEMENT, SPLICES, SUPPORTS FOR REINFORCEMENT SHALL CONFORM TO REQUIREMENTS OF ACI-318 14.

4. CONTINUOUS REINFORCEMENTS SHALL BE LAPPED 48 DIAMETERS AT SPLICES AND CORNERS AND HOOKED AT NON-CONTINUOUS ENDS OR EXTENDED 24 BAR DIAMETERS UNLESS OTHERWISE NOTED. DETAILING OF ALL REINFORCEMENT SHALL BE IN ACCORDANCE WITH ACI SP-66. (88)

5. PROVIDE TWO #6 ALL SIDES FOR OPENINGS IN CONCRETE WALLS UNLESS OTHERWISE NOTED. EXTEND BARS 2'-0" BEYOND OPENING; HOOK ENDS.

6. PROVIDE SLEEVES AND BOX OUT FOR OPENINGS FOR MECHANICAL TRADES. OPENINGS SHALL BE PLACED SO AS NOT TO AFFECT THE STRENGTH OF STRUCTURAL MEMBERS.

7. BEFORE PLACING CONCRETE, CONTRACTOR SHALL SUBMIT FOR REVIEW A COMPLETE SEQUENCE OF PLACING SCHEDULE INDICATING ALL CONSTRUCTION JOINTS, TIME SCHEDULE, AND GUARANTEE OF CONTINUITY OF CONCRETE SUPPLY.

MASONRY:

1. ALL CONCRETE BLOCK SHALL BE LOAD BEARING AND SHALL CONFORM TO A.S.T.M. STANDARD C-90 FOR GRADE "N" UNITS. MORTAR SHALL BE TYPE "M".

2. PROVIDE VERTICAL CONTROL JOINTS IN BLOCK WALL 30'-0" O.C. MAXIMUM USING A PRE MOLDED FILLER AND JAMB BLOCKS UNLESS DETAILED OTHERWISE.

3. ALL BLOCK WALLS SHALL BE CONSTRUCTED WITH GALV. WALL REINFORCING. REINFORCING TO BE TRUSS-TYPE. 9 GAUGE AND PLACED A MAXIMUM OF 1'-4" O.C. VERTICALLY AND TO BE THE WIDTH RECOMMENDED BY THE MANUFACTURER. PROVIDE #5 BARS @ 32" O.C. VERT. IN ALL MASONRY WALLS

4. FILL BLOCKS SOLID UNDER CONCENTRATED LOADS IN ALL BLOCK WALLS ABOVE AND BELOW GRADE.

5. ALL ANCHORAGE PLACED IN MASONRY SHALL BE ANCHORED SECURELY WITH CONCRETE.

6. ALL JAMBS AT MASONRY OPENINGS SHALL BE FILLED SOLID WITH CONCRETE.

STRUCTURAL STEEL:

1. STRUCTURAL STEEL SHALL BE FABRICATED AND ERECTED IN ACCORDANCE WITH AISC SPECIFICATIONS FOR DESIGN, FABRICATION AND ERECTION OF STRUCTURAL STEEL FOR BUILDINGS.

2. ROLLED SHAPES AND PLATES SHALL CONFORM TO ASTM DESIGNATION A-572 UNLESS NOTED OTHERWISE; STEEL PIPE SHALL CONFORM TO ASTM A501; STRUCTURAL TUBING SHALL CONFORM TO ASTM A500 GRADE B.

3. SHOP CONNECTIONS SHALL BE WELDED. FIELD CONNECTIONS SHALL BE 3/4" DIAMETER A-325 TYPE N CONNECTION, EXCEPT WHERE FIELD WELDING IS CALLED FOR ON THE DRAWING.

4. WELDING SHALL COMPLY WITH AWS SPECIFICATIONS. USE ETOXX ELECTRODES.

5. ALL STEEL SHALL RECEIVE ONE SHOP COAT OF RUST-INHIBITIVE PAINT.

6. PROVIDE ANGLE ANCHORS AT ENDS OF ALL BEAMS RESTING ON MASONRY OR CONCRETE.

7. CONNECTIONS TO BE DOUBLE ANGLE CONNECTIONS UNLESS NOTED OTHERWISE.

8. ALL BASE PLATES SHALL BE ANCHORED WITH (4) 3/4" DIAMETER BY 18" LONG ANCHOR RODS UNLESS NOTED OTHERWISE.

9. ALL LOOSE LINTELS SHALL HAVE A MINIMUM OF 8" BEARING AT EACH END OF M.O.; PROVIDE FLASHING AT ALL EXTERIOR OPENINGS. ALL WIDE FLANGE LINTELS SHALL HAVE A MINIMUM OF 10" BEARING EACH END OVER 16" BRICK MASONRY.

10. PROVIDE ALL BOLTS, HOLES ANCHORS, ANGLES, ETC. AS REQUIRED FOR A COMPLETE INSTALLATION AND AS REQUIRED BY THE WORK OF OTHER TRADES.

11. PROVIDE MASONRY ANCHORS AT 32" O.C. ON ALL SPANDREL BEAMS AND 16" O.C. ON ALL COLUMNS. HOHMANN & BARNARD 1/4" #VKT GALV. WALL TIE WITH #359 GALV. WELD-ON TIES OR APP. EQUAL.

STEEL DECK:

1. STEEL ROOF DECK SHALL BE 22 GAUGE, 1 1/2" DEEP, GALVANIZED, TYPE "B" AS MANUFACTURED BY UNITED STEEL DECK INC. OR APPROVED EQUAL; FLOOR DECK SHALL BE 1 1/2" DEEP GALV. 22 GAUGE B-LOK COMPOSITE FLOOR DECK

2. WELD SIDE LAPS AT MID-POINT OF SPAN.

DATE: ISSUE

07-20-2022 ISSUED FOR BID & PERMIT

SEAL:

SENDLEWSKI ARCHITECTS PC
ARCHITECTS - PLANNERS
215 ROANOKE AVENUE
RIVERHEAD, NY 11901
(631) 727-5352
9 SELENA COURT
WALDEN, NY 12586
(845) 275-8859

PROPOSED NEW FACILITY
TAPPAN FIRE DISTRICT
135 WASHINGTON STREET
TAPPAN, NY 10983

COLUMN SCHEDULE & DETAILS

PROJECT #: 2108.01A

DRAWN BY:

CAD FILE: 2108.01A/P:/BID

DRAWING#:

S-4

ATTACHMENT _ 'G' (5 pgs)

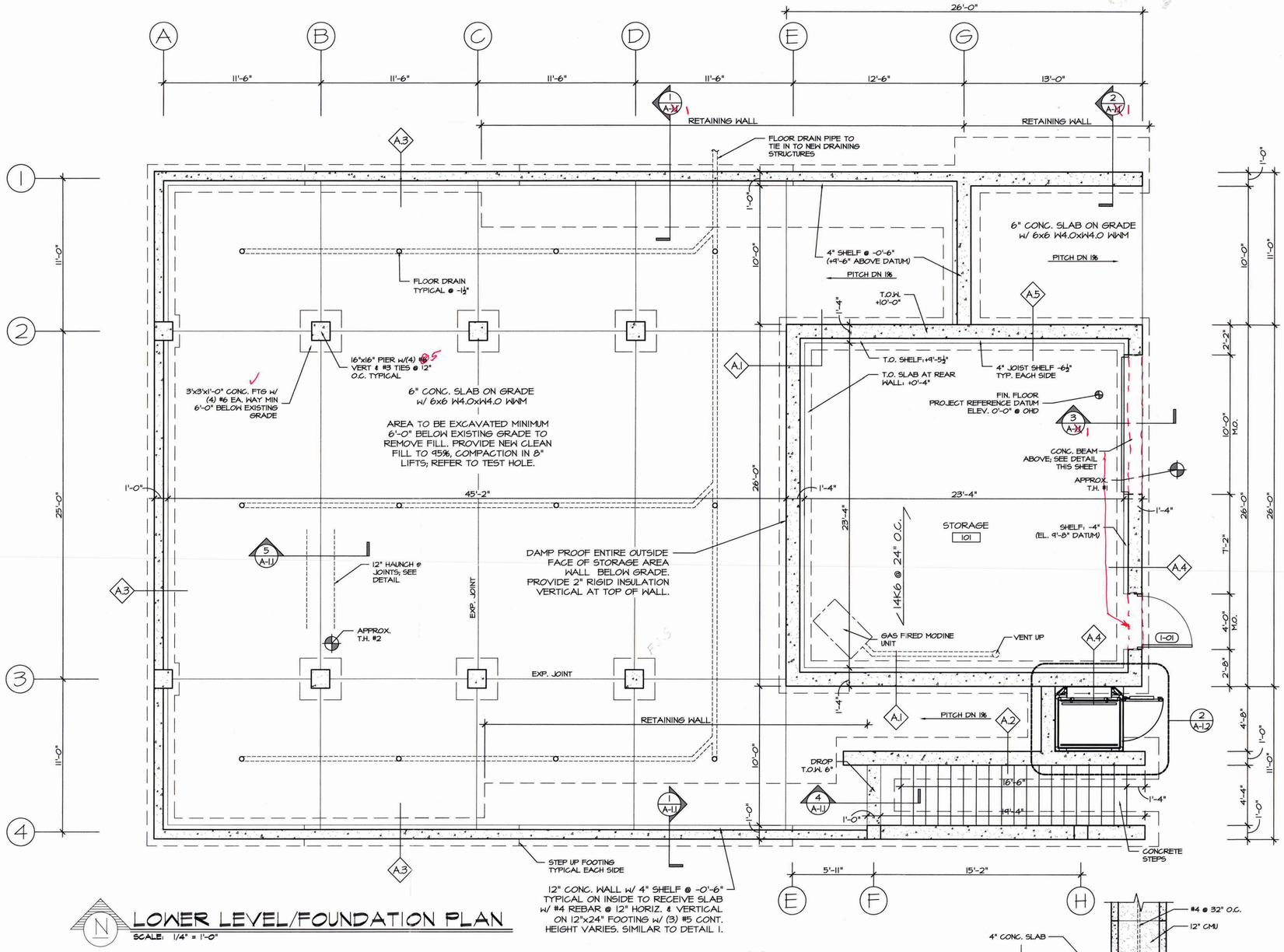

LOWER LEVEL/FOUNDATION PLAN

SCALE: 1/4" = 1'-0"

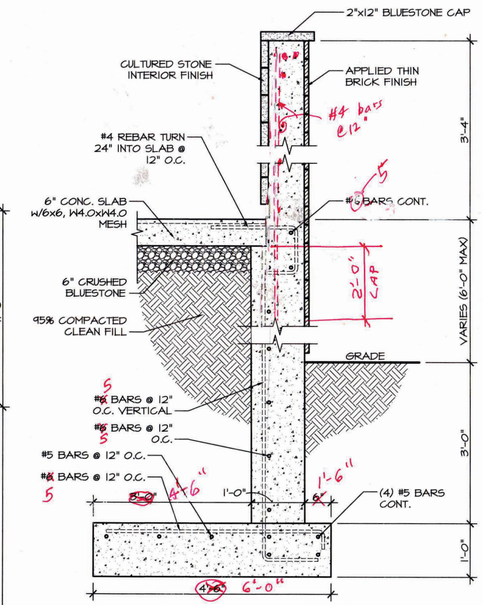

RETAINING WALL DETAIL

SCALE: 3/4" = 1'-0"

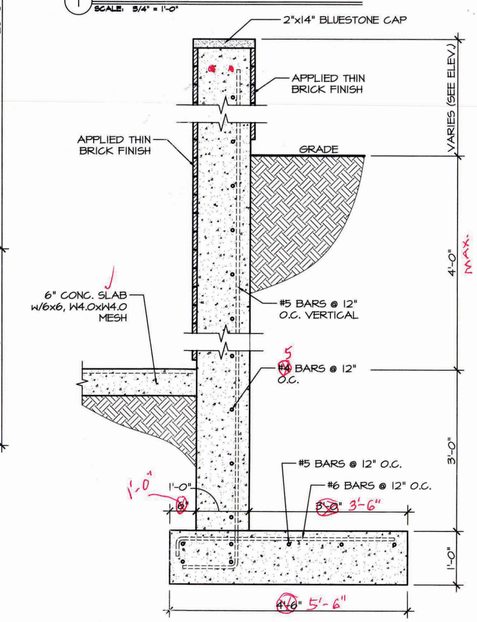

RETAINING WALL DETAIL

SCALE: 3/4" = 1'-0"

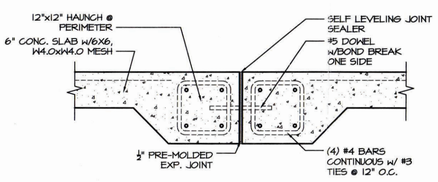

EXPANSION JOINT DETAIL

SCALE: 3/4" = 1'-0"

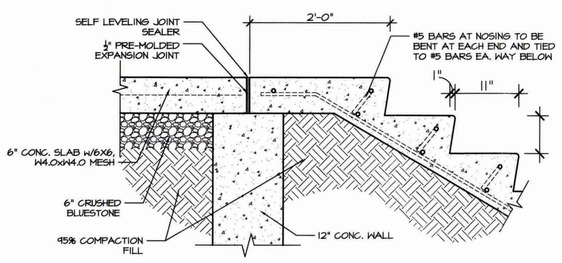

CONC. STAIR DETAIL

SCALE: 3/4" = 1'-0"

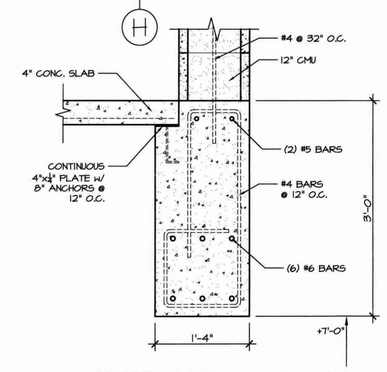

CONCRETE BEAM AT O.H.D.

SCALE: 3/4" = 1'-0"

DATE: ISSUE

__-__-20__ ISSUED FOR BIDDING & PERMIT

SEAL:

SENDLEWSKI ARCHITECTS PC
ARCHITECTS - PLANNERS
215 ROANOKE AVENUE
RIVERHEAD, NY 11901
(631) 727-5352
9 SELENA COURT
WALDEN, NY 12586
(845) 275-8859

PROPOSED PAVILION
TAPPAN FIRE DISTRICT
300 WESTERN HIGHWAY SOUTH
TAPPAN, NY 10983

LOWER LEVEL/FOUNDATION PLAN

PROJECT #: 2108.02

DRAWN BY: AR/JC

CAD FILE: 2108.02/P:/BID

DRAWING#: A-1

PAVILLION

07-12-22 UPDATE

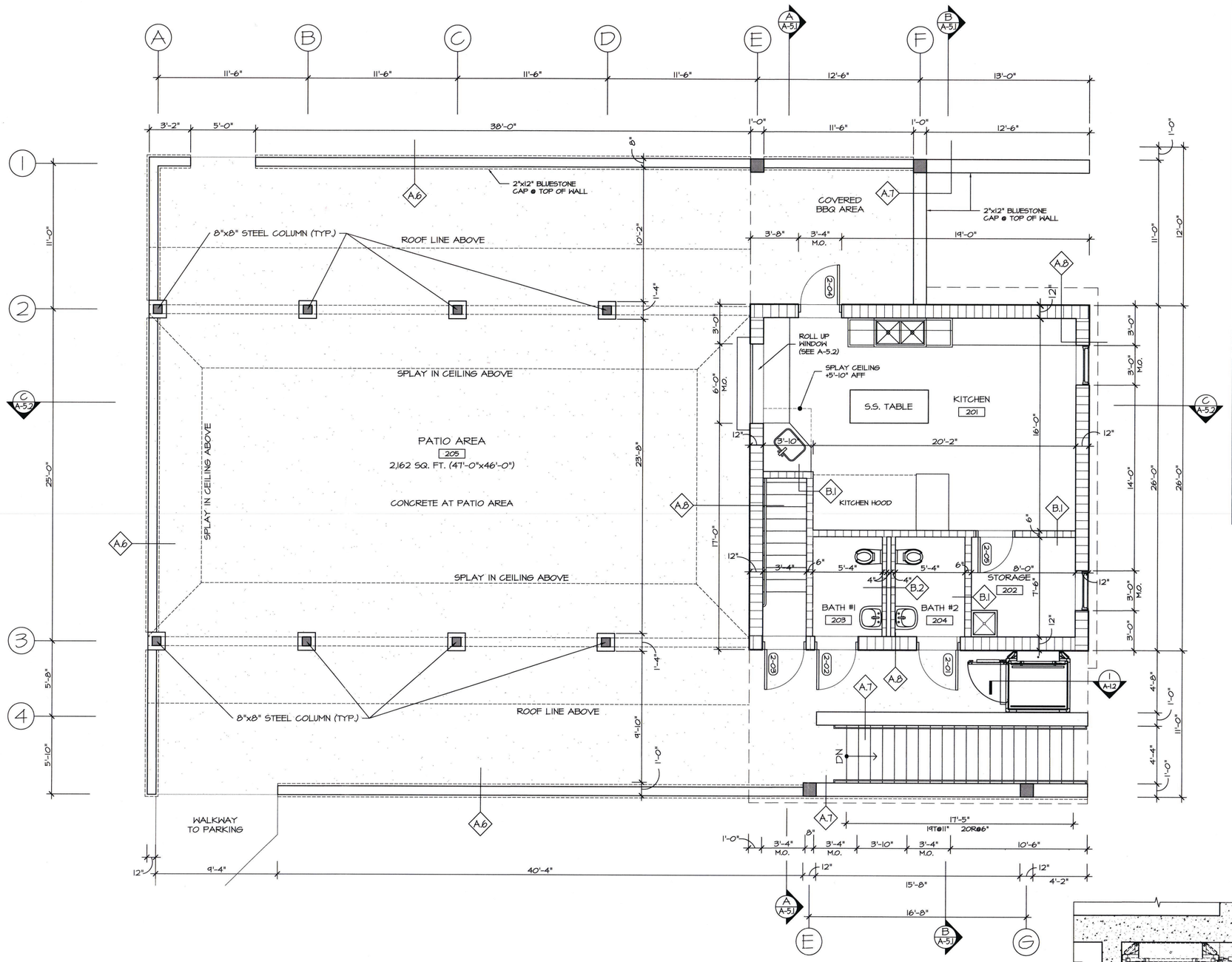

MAIN LEVEL PLAN

SCALE: 1/4" = 1'-0"

OCCUPANCY

KITCHEN:	800 sf / 200	= 4.1
ASSEMBLY AREAS:	2,162 sf / 15	= 144.13
TOTAL OCCUPANT LOAD:		= 148.23

WALL TYPES LEGEND

A.1	EXTERIOR WALL	16" 4,000 PSI CONC. WALL
A.2	EXTERIOR WALL	12" 4,000 PSI CONC. WALL
A.3	EXTERIOR WALL	12" 4,000 PSI CONC. WALL w/ EXTERIOR APPLIED THIN BRICK FINISH BOTH SIDES
A.4	EXTERIOR WALL	16" CONC. WALL w/ 36" HIGH CULTURED STONE WATER TABLE AND APPLIED THIN BRICK FINISH ABOVE.
A.5	EXTERIOR WALL	16" CONC. WALL w/ APPLIED THIN BRICK FINISH ABOVE.
A.6	EXTERIOR WALL	8" CONC. WALL w/ CULTURED STONE INTERIOR FINISH, APPLIED THIN BRICK EXTERIOR FINISH, 2"X12" BLUESTONE CAP @ TOP OF WALL.
A.7	EXTERIOR WALL	12" CONC. WALL w/ APPLIED THIN BRICK FINISH BOTH SIDE. 2"X12" BLUESTONE CAP @ TOP OF WALL.
A.8	EXTERIOR WALL	12" CMU BLOCK WALL w/ FULLY INSULATED CAVITY. 36" HIGH THIN BRICK @ BASE AND HARDIE PLANK LAP SIDING ABOVE.
A.9	EXTERIOR WALL	12" CMU BLOCK WALL TO 20" SILL HEIGHT. CONTINUE WITH 8" BLOCK TO UNDERSIDE OF ROOF w/ FULLY INSULATED CAVITY. HARDIE PLANK LAP SIDING
A.10	EXTERIOR WALL	8" CMU BLOCK WALL w/ FULLY INSULATED CAVITY AND HARDIE PLANK LAP SIDING.
B.1	INTERIOR WALL	6" CMU BLOCK WALL w/ FULLY INSULATED CAVITY
B.2	INTERIOR WET WALL	(3) 4" CMU BLOCK WALLS WITH 4" AIR GAPS IN-BETWEEN FOR PLUMBING
B.3	INTERIOR WALL	4" U@A. MTL STUDS @ 24" O.C. FULL HEIGHT TO DECK. 5/8" GYP. BOARD EA. SIDE, TAPE SPACKLE AND PAINT

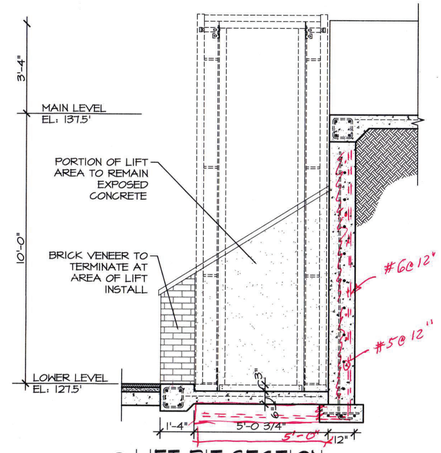

1 LIFT PIT SECTION

SCALE: 3/8" = 1'-0"

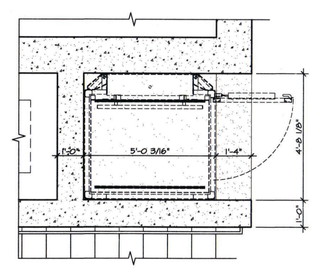

2 LIFT PLAN

SCALE: 3/8" = 1'-0"

GENESIS VERTICAL PLATFORM LIFT.

CODE REFERENCE: ASME A18.1 "SAFETY STANDARD FOR PLATFORMS LIFTS AND STAIRWAY CHAIRLIFTS"

GENERAL: COLOR: STANDARD (SILVER MOON POWDERED ALUMINUM EXTRUSIONS WITH 18 GA. GALVANIZED STEEL PANELS POWDER COATED SILVER MOON)
OUTDOOR UNIT - PIT MOUNT (DRAIN REQUIRED)
ANSI 297J PLEXIGLASS STICKING
NUMBER OF STOPS - TWO STOP KIT

DRIVE MAST: MODEL: GVL-EN-144
GMAN HYDRAULIC DRIVE SYSTEM C/W CONTINUOUS MAINS POWER WITH AUXILIARY BATTERY POWER SYSTEM SYSTEM, PLATFORM EMERGENCY LOWERING (SHIPPED LOOSE), SKORNE PIN, 4 PRESSURE GAUGE
MOTOR: 2.2 kW, (3.0 HP), 24 VDC
TRAVEL SPEED: 150 LB @ 11 FT/MIN.
POWER SUPPLY: 120 VAC, SINGLE PHASE, 60 HZ, ON A DEDICATED 15 AMP CIRCUIT.
EQUIPPED WITH: ELECTRICAL DISCONNECT (SHIPPED LOOSE) (x3), OIL RECOVERY SYSTEM, SPLIT MAST KIT.

CONTROLS: PLATFORM CONTROLS: PUSH-BUTTON (TACTILE) TYPE C/W ILLUMINATED DIRECTIONAL BUTTONS, COURTESY LIGHTING, ILLUMINATED ROCKER (PUSH/PULL) EMERGENCY STOP SWITCH & AUDIBLE ALARM.
LOWER LANDING CALL STATION: PUSH BUTTON (TACTILE) WALL MOUNT
UPPER LANDING CALL STATION: PUSH BUTTON (TACTILE) WALL MOUNT
EQUIPPED WITH: TIME DELAY DOOR LOCK

PLATFORM: SIZE: STANDARD C/W GRAB RAIL, ANTI-SKID DECK, AND 48 1/4" HIGH
CONFIGURATION: STRAIGHT THROUGH (180°) ENTUDENT
CAPACITY: 1WARSH 750 LB OPERATING LOAD
EQUIPPED WITH: AUTO-DIALER PHONE

DOORWAYS: LOWER: 36" WIDE 1/4" LAMINATED GLASS DOOR C/W POWERLOCK 2000 INTERLOCK & OMAHA DOOR STOP & GARAVENTA POWER DOOR OPERATOR
UPPER: 36" WIDE 1/4" LAMINATED GLASS GATE C/W POWERLOCK 2000 INTERLOCK & OMAHA DOOR STOP & GARAVENTA POWER DOOR OPERATOR

ENCLOSURE: PANELS: STEEL
TOTAL UNIT HEIGHT: APPROXIMATELY 875 LB
LIFTING HT. (MIN. 120" LOWER TO UPPER FLOOR PLUS 3" DEEP PIT

DATE: ISSUE

__-__-20__ ISSUED FOR BIDDING & PERMIT

SEAL:

SENDLEWSKI ARCHITECTS PC
ARCHITECTS - PLANNERS
215 ROANOKE AVENUE
RIVERHEAD, NY 11901
(631) 727-5352
9 SELENA COURT
WALDEN, NY 12586
(845) 275-8859

PROPOSED PAVILION
TAPPAN FIRE DISTRICT
300 WESTERN HIGHWAY SOUTH
TAPPAN, NY 10983

MAIN LEVEL PLAN

PROJECT #: 2108.02

DRAWN BY: AR/JC

CAD FILE: 2108.02/P./BID

DRAWING#:

A-2

PAVILLION

07-12-22 UPDATE

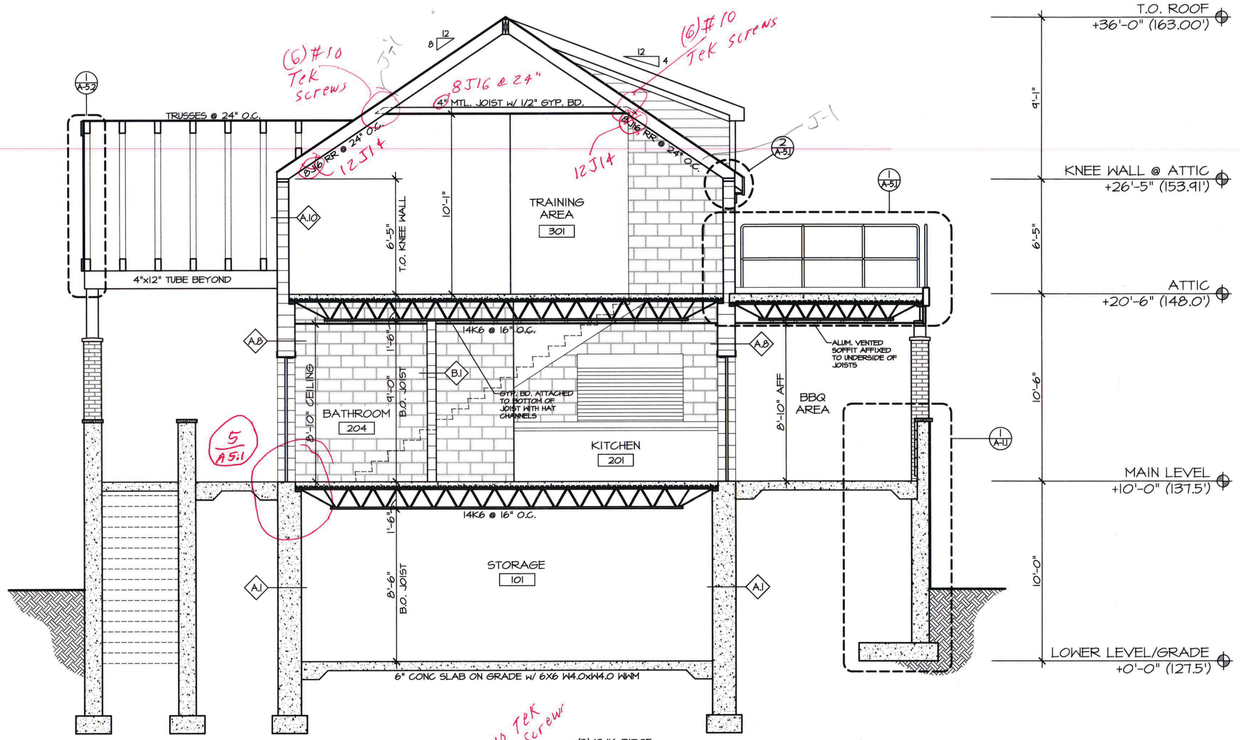

B SECTION
SCALE: 1/4" = 1'-0"

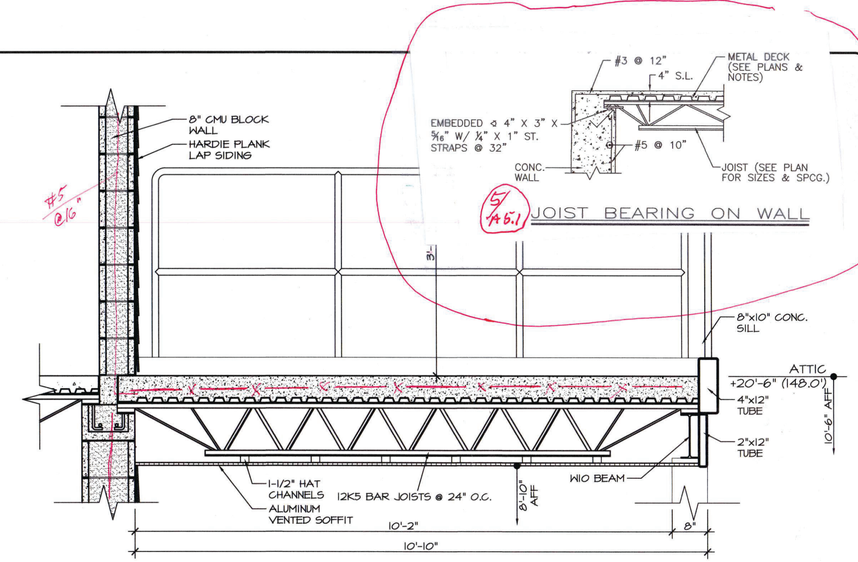

1 SECTION
SCALE: 3/4" = 1'-0"

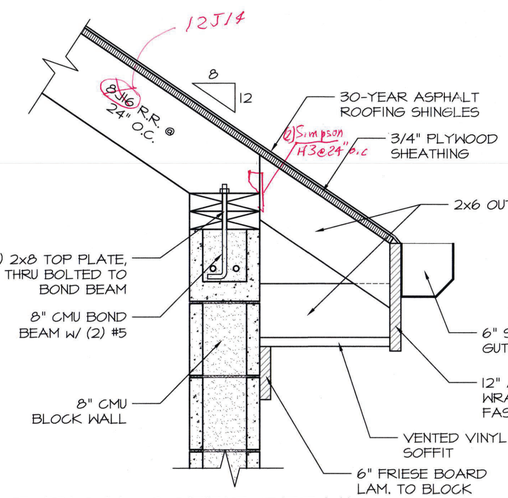

2 TYPICAL SOFFIT DETAIL
SCALE: 1-1/2" = 1'-0"

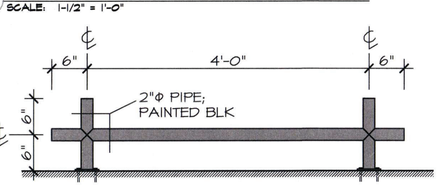

STAND-OFF PIPE DETAIL
SCALE: 1-1/2" = 1'-0"

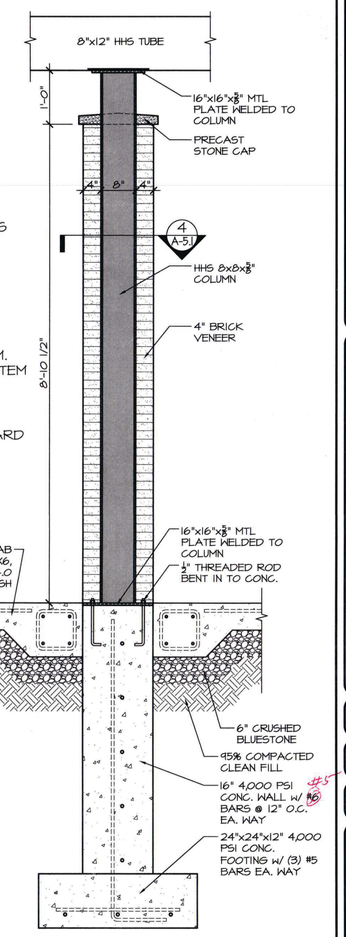

3 TYPICAL PIER DETAIL
SCALE: 3/4" = 1'-0"

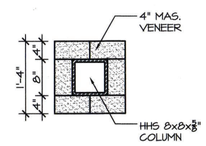

4 PIER SECTION
SCALE: 3/4" = 1'-0"

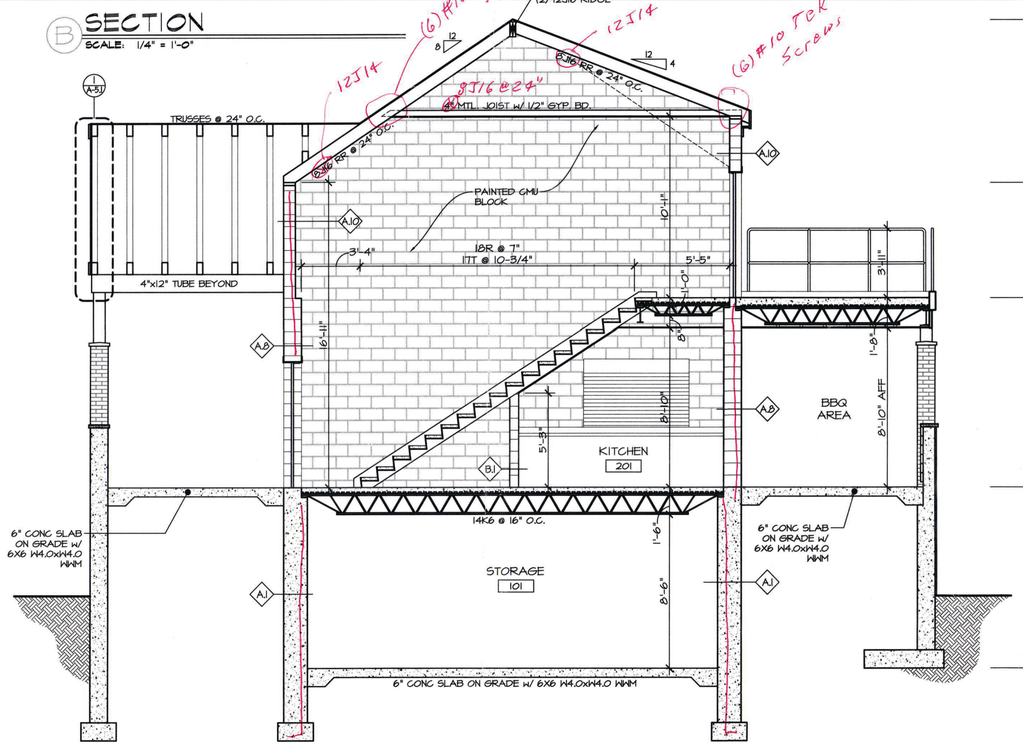

A SECTION
SCALE: 1/4" = 1'-0"

DATE: ISSUE
-__-__-20__ ISSUED FOR BIDDING & PERMIT

SEAL:

SENDLEWSKI ARCHITECTS PC
ARCHITECTS - PLANNERS
215 ROANOKE AVENUE
RIVERHEAD, NY 11901
(631) 727-5352
9 SELENA COURT
WALDEN, NY 12586
(845) 275-8859

PROPOSED PAVILION
TAPPAN FIRE DISTRICT
300 WESTERN HIGHWAY SOUTH
TAPPAN, NY 10983

SECTIONS & DETAILS

PROJECT #: 2108/C

DRAWN BY:

CAD FILE: 2108/P:/BID

DRAWING#: A-5.1

PAVILLION

07-11-22 UPDATE

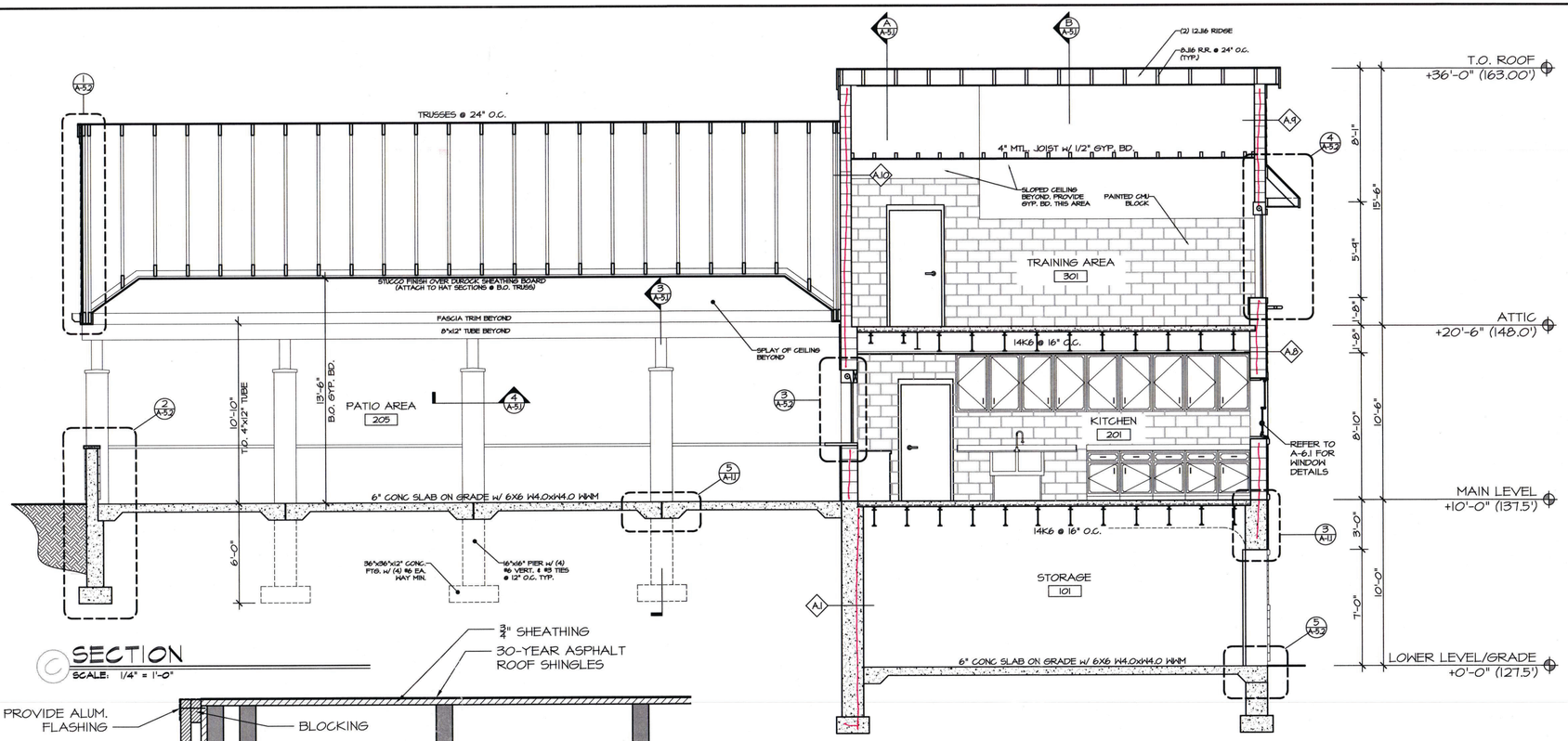

SECTION
SCALE: 1/4" = 1'-0"

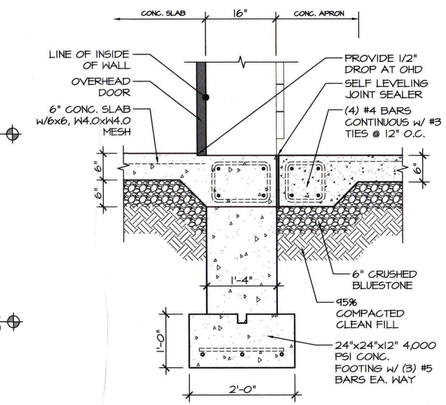

5 WALL DETAIL
SCALE: 3/4" = 1'-0"

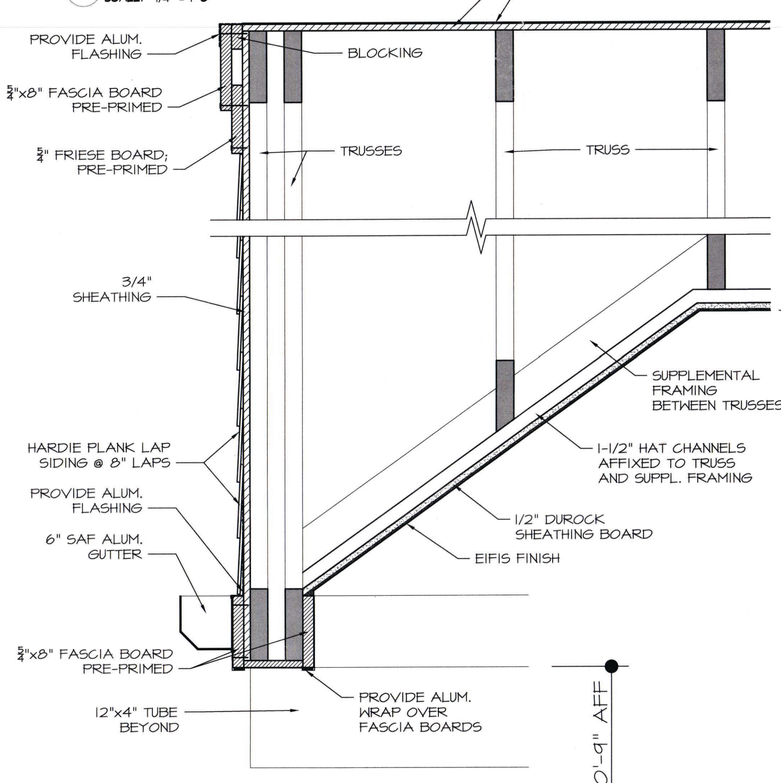

1 TRUSS END DETAIL
SCALE: 1-1/2" = 1'-0"

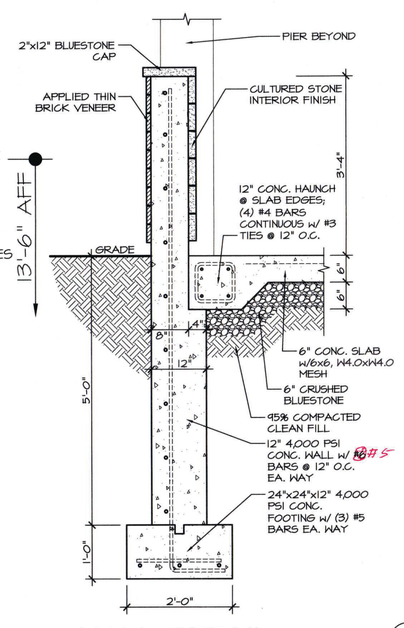

2 WALL DETAIL
SCALE: 3/4" = 1'-0"

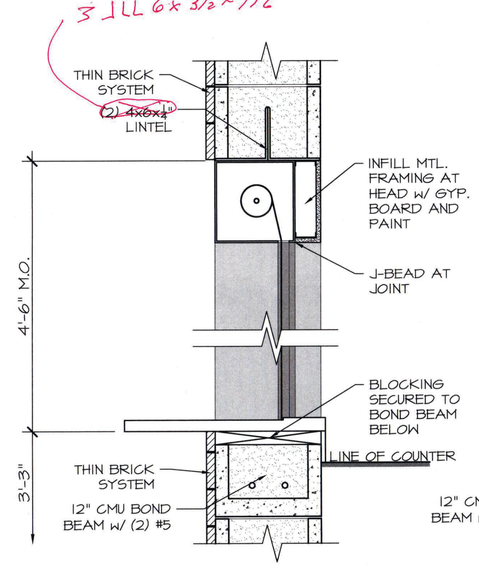

3 KITCHEN ROLL UP WINDOW
SCALE: 1-1/2" = 1'-0"

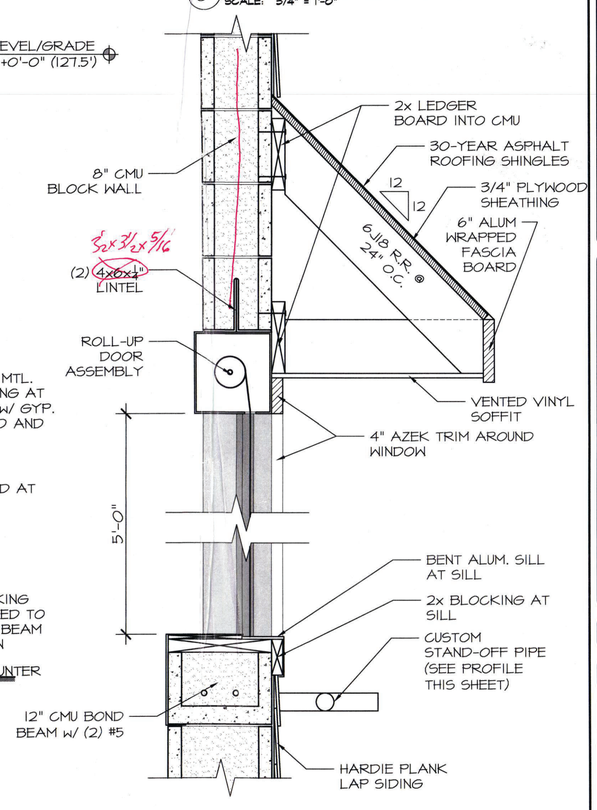

4 TRAINING ROLL UP WINDOW
SCALE: 1-1/2" = 1'-0"

DATE: ISSUE

__-__-20__ ISSUED FOR BIDDING & PERMIT

SEAL:

SENDLEWSKI ARCHITECTS PC
ARCHITECTS - PLANNERS
215 ROANOKE AVENUE
RIVERHEAD, NY 11901
(631) 727-5352
9 SELENA COURT
WALDEN, NY 12586
(845) 275-8859

PROPOSED PAVILION
TAPPAN FIRE DISTRICT
300 WESTERN HIGHWAY SOUTH
TAPPAN, NY 10983

SECTIONS & DETAILS

PROJECT #: 2108/C

DRAWN BY:

CAD FILE: 2108/P:/BID

DRAWING#:

A-5.2

PAVILLION

07-11-22 UPDATE

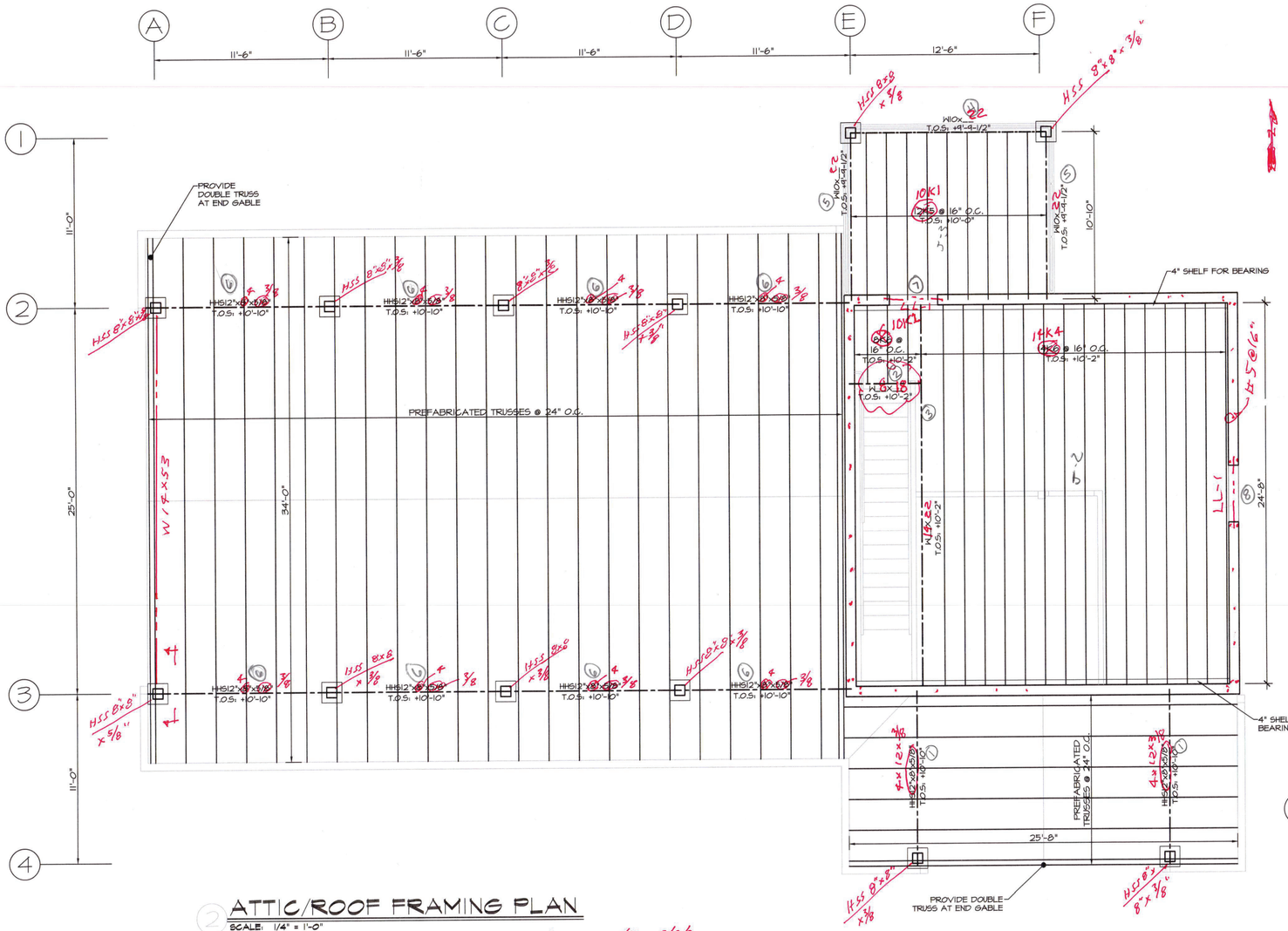

ATTIC/ROOF FRAMING PLAN

SCALE: 1/4" = 1'-0"

Note: 1. Floor deck @ attic Floor to be 4" concrete slab on 22 gauge 1½" deep "B-lok" composite floor deck with 6"x6"-W4.0/W4.0 wwm

2. Floor deck @ Terrace to be 6" concrete slab on 22 gauge 1½" deep B-lok composite floor deck with 4"x4-W4.0/W4.0 wwm

TAPPAN FD - DESIGN CRITERIA:

DESIGN LOADS:

GROUND SNOW LOAD = 50 PSF
SNOW LOAD IMPORTANCE FACTOR I_s = 1.2
THERMAL FACTOR C = 1.0
FLAT ROOF SNOW LOAD = 29.2 PSF
ROOF DEAD LOAD = 25 PSF
ROOF LIVE LOAD = 20 PSF
FLOOR (LL) = 100 PSF
FLOOR (DL) = 80/105 PSF
(DROPTINE LOADS IN ACCORDANCE WITH ASCE 7)
WIND (120 MPH) = 42 PSF
WIND IMPORTANCE FACTOR I_w = 1.15
EXPOSURE "B"
INTERNAL PRESSURE COEFFICIENT = ± .18
DESIGN WIND PRESSURE FOR COMPONENTS & CLADDING = +34 PSF, -43 PSF
OCCUPANCY CATEGORY IV

SEISMIC DESIGN PARAMETERS:

1. I_e = 1.50; SEISMIC USE GROUP "IV"
2. S_s = .394 .063
3. SITE CLASS "D"
4. S_{DS} = .394 .311
   S_{D1} = .394 .149
5. SEISMIC DESIGN CATEGORY "C"
6. SEISMIC COEFFICIENTS FOR ORDINARY REINFORCED MASONRY SHEARWALLS
   A. R = 2
   B. Ω = 2.5
   C. Cd = 2
   D. REDUNDANCY COEFFICIENT = 1.0
   E. FUNDAMENTAL PERIOD = .02 SEC.
   F. C_s = .098 .149 .50
7. SEISMIC COEFFICIENTS FOR ~~ORDINARY REINFORCED MASONRY SHEARWALLS~~ Steel ordinary concentrically braced frames
   A. R = 3 3¼
   B. Ω = 2
   C. Cd = 3.5 3¼
   D. REDUNDANCY COEFFICIENT = 1.0
   E. FUNDAMENTAL PERIOD = .02 SEC.
   F. C_s = .044 .091 .56
8. DESIGN BASE SHEAR = 42 KIPS 39.2

SPECIAL INSPECTIONS REQUIRED:

1. STEEL
   A. MATERIAL VERIFICATION OF STRUCTURAL STEEL
   B. HIGH STRENGTH BOLTS
   C. WELDING
   D. JOINT DETAILS AS CONSTRUCTED
2. CONCRETE
   A. REINFORCING STEEL
   B. ANCHOR BOLTS
   C. PLACEMENT & CURING
   D. SAMPLING FRESH CONCRETE
3. MASONRY
   A. MORTAR & JOINTS
   B. REINFORCING
   C. HOT & COLD WEATHER PROTECTION
   D. GROUTING
4. ~~FIELD FOUNDATIONS~~
   A. ~~GEOTECHNICAL SPECIAL INSPECTIONS DURING INSTALLATION~~
5. SOIL BEARING CAPACITY (PER TEST BORINGS REPORT)

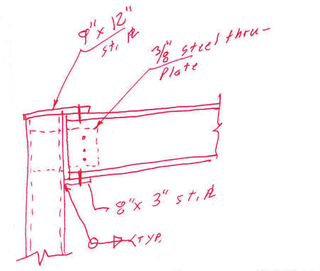

TYPICAL STEEL BEAM TO STEEL COL. CONN.

PREFABRICATED ROOF TRUSS NOTES

Prefabricated Steel roof trusses shall be designed in accordance with the following criteria:

1. Loading:

Top chord live load	36 psf
Top chord dead load	10 psf
Bottom chord live load	10 psf
Bottom chord dead load	9 psf
Total	65 psf

2. Trusses to be designed for wind load of 42psf.
3. Provide all temporary and permanent lateral bracing as required to maintain structural integrity.
4. Shop drawings prepared and sealed by a N.Y.S. licensed professional engineer shall be submitted to the Architect of record for review prior to fabrication. Shop drawings shall show member forces, steel grades, and all details of connections.

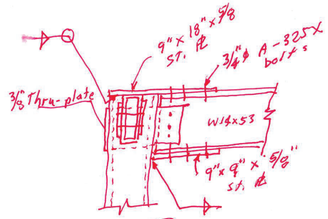

SECTION 4/A-8

LINTEL SCHEDULE	
MARK	SIZE
LL-1	2 ∠∠s 3½ x 3½ x 5/16
LL-2	3 ∠∠s 3½ x 3½ x 5/16
LL-3	3 ∠∠s 6 x 3½ x 5/16

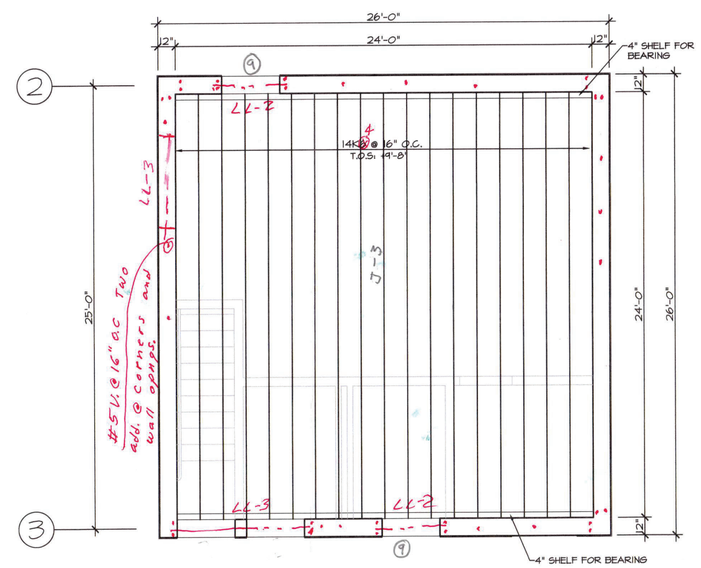

MAIN LEVEL FRAMING PLAN

SCALE: 1/4" = 1'-0"

Note: Floor deck to be 4" concrete slab on 22 gauge 1½" deep "B-lok" composite floor deck with 6"x6"-W4.0/W4.0 wwm

DATE: ISSUE
07-20-2022 ISSUED FOR BIDDING & PERMIT

SEAL:

SENDLEWSKI ARCHITECTS PC
ARCHITECTS - PLANNERS
215 ROANOKE AVENUE
RIVERHEAD, NY 11901
(631) 727-5352
9 SELENA COURT
WALDEN, NY 12586
(845) 275-8859

PROPOSED PAVILION
TAPPAN FIRE DISTRICT
300 WESTERN HIGHWAY SOUTH
TAPPAN, NY 10983

STRUCTURAL FRAMING PLANS

PROJECT #: 2108.02

DRAWN BY: AR/JC

CAD FILE: 2108.02/P:/BID

DRAWING#: A-8

PAVILION

ATTACHMENT _ SP-1 (7 pgs)

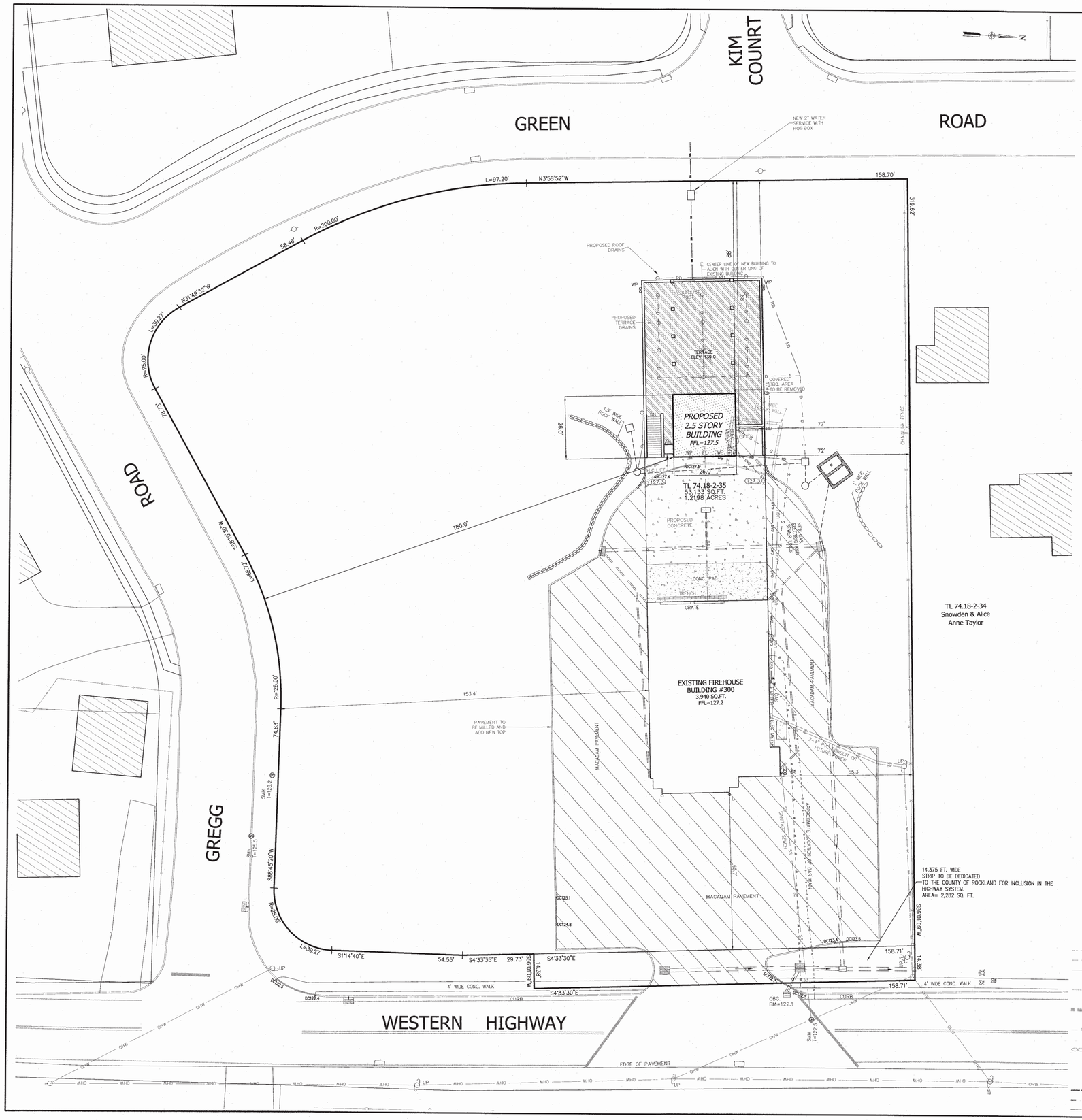

NOTES:

1. ALL UTILITIES, INCLUDING ELECTRIC AND TELEPHONE SERVICE SHALL BE INSTALLED UNDERGROUND.
2. NO BUILDING PERMIT WILL BE ISSUED UNTIL SEWAGE DISPOSAL ARRANGEMENTS HAVE BEEN APPROVED BY THE ROCKLAND COUNTY HEALTH DEPARTMENT AND/OR THE TOWN OF ORANGETOWN.
3. LOT DRAINAGE ON THIS PLAN SHALL CONSTITUTE EASEMENTS RUNNING WITH THE LAND AND SHALL NOT BE DISTURBED.
4. ANY EXISTING UTILITIES (POLES, HYDRANTS, ETC.) AFFECTED BY CONSTRUCTION OF THIS SITE PLAN SHALL BE RELOCATED AT THE DEVELOPERS EXPENSE PRIOR TO THE ISSUANCE OF ANY CERTIFICATE OF OCCUPANCY.
5. NO OPEN BURNING DURING CONSTRUCTION WITHOUT SPECIFIC PERMISSION FROM NEW YORK STATE DEPARTMENT OF HEALTH.
6. DATUM: NAVD 1988–CATCHBASIN GREENBUSH ROAD.
7. NO BUILDING PERMIT SHALL BE ISSUED UNTIL RESULTS OF TEST PITS HAVE BEEN SUBMITTED TO THE BUILDING DEPARTMENT.
8. DURING THE COURSE OF CONSTRUCTION, ALL STORM DRAIN INLETS SHALL BE PROTECTED WITH A HAY BALE FILTER (SEE DETAIL).
9. ALL AREAS DISTURBED BY ONSITE GRADING SHOULD BE LIMED AND FERTILIZED PRIOR TO SEEDING.
10. THE NEW CORNERS OF ALL LOTS SHALL BE MARKED WITH METAL RODS 3/4" IN DIAMETER, AND AT LEAST 30" IN LENGTH (TO BE INSTALLED AFTER FINAL GRADING). SAID PINS SHOWN THUS: ●
11. THIS SITE PLAN IS SUBJECT TO DETAILS OF GRADING, ROADS AND UTILITIES AS SHOWN ON CONSTRUCTION DRAWINGS APPROVED BY THE PLANNING BOARD AND FILED WITH THE TOWN CLERK.
12. SIDEWALKS AND CURBS SHALL BE INSTALLED IN ACCORDANCE WITH HIGHWAY DEPARTMENT SPECIFICATIONS.
13. TEMPORARY SEDIMENT ENTRAPMENT AREAS SHALL BE PROVIDED AS SHOWN TO INTERCEPT AND CLARIFY SILT LADEN RUNOFF FROM THE SITE. THESE MAY BE EXCAVATED OR MAY BE CREATED UTILIZING EARTHEN BERMS, RIP–RAP OR CRUSHED STONE DAMS, HAY BALES, OR OTHER SUITABLE MATERIALS. DIVERSION SWALES, BERMS OR THE CHANNELIZATION SHALL BE CONSTRUCTED TO INSURE THAT ALL SILT LADEN WATERS ARE DIRECTED INTO THE ENTRAPMENT AREAS, WHICH SHALL NOT BE PERMITTED TO FILL IN, BUT SHALL BE CLEANED PERIODICALLY DURING THE COURSE OF CONSTRUCTION. THE COLLECTED SILT SHALL BE DEPOSITED IN AREAS SAFE FROM FURTHER EROSION.
14. ALL DISTURBED AREAS, EXCEPT ROADWAYS, WHICH WILL REMAIN UNFURNISHED FOR MORE THAN THIRTY (30) DAYS SHALL BE TEMPORARILY SEEDED WITH 3 LB. OF RYE GRASS OR MULCH WITH 100 LBS. OF STRAW OR HAY PER 1,000 SQUARE FEET. ROADWAYS SHALL BE STABILIZED AS RAPIDLY AS PRACTICABLE BY THE INSTALLATION OF THE BASE COURSE.
15. SILT THAT LEAVES THE SITE IN SPITE OF THE REQUIRED PRECAUTIONS SHALL BE COLLECTED AND REMOVED AS DIRECTED BY APPROPRIATE MUNICIPAL AUTHORITIES.
16. AT THE COMPLETION OF THE PROJECT ALL TEMPORARY SILTATION DEVICES SHALL BE REMOVED AND THE AFFECTED AREAS REGRADED, PLANTED, OR TREATED IN ACCORDANCE WITH THE APPROVED SITE PLANS.
17. PERMANENT VEGETATION COVER SPECIFICATIONS:

    LAWN AREA – PER 1,000 S.F.
    15 LBS. 10–6–4 50% SLOW RELEASE FERTILIZER
    70 LBS. GRANULATE LIMESTONE
    4 LBS. SEED MIXTURE

    40% KENTUCKY BLUE
    40% RED FESCUE
    20% PERENNIAL RYEGRASS
18. THIS PLAN DOES NOT CONFLICT WITH THE COUNTY OFFICIAL MAP AND HAS BEEN APPROVED IN THE MANNER SPECIFIED BY SECTION 239 L&M OF THE GENERAL MUNICIPAL LAW.
19. CERTIFICATE OF OCCUPANCY SHALL NOT BE REQUESTED FROM THE TOWN OF ORANGETOWN BUILDING DEPARTMENT UNTIL RESULTS OF INFILTRATION AND EXFILTRATION TESTS FOR SANITARY SEWERS ARE CERTIFIED BY A NEW YORK STATE LICENSED PROFESSIONAL ENGINEER AND APPROVED BY THE DIRECTOR, DIVISION OF SEWERS.
20. AT LEAST ONE WEEK PRIOR TO THE COMMENCEMENT OF ANY WORK, INCLUDING THE INSTALLATION OF EROSION CONTROL DEVICES OR THE REMOVAL OF TREES AND VEGETATION, A PRECONSTRUCTION MEETING MUST BE HELD WITH THE DEME, SUPERINTENDENT OF HIGHWAYS AND THE OFFICE OF BUILDING, ZONING AND PLANNING ADMINISTRATION AND ENFORCEMENT. IT IS THE RESPONSIBILITY OF THE PROPERTY OWNER TO ARRANGE SUCH A MEETING.
21. TREE PROTECTION :
    A TREE PROTECTION PROGRAM WILL BE IMPLEMENTED IN ORDER TO PROTECT AND PRESERVE BOTH INDIVIDUAL SPECIMEN TREES AND BUFFER AREAS WITH MANY TREES. STEPS, WHICH WILL BE TAKEN TO PRESERVE AND PROTECT EXISTING TREES, ARE AS FOLLOWS:

    A) NO CONSTRUCTION EQUIPMENT SHALL BE PARKED UNDER THE TREE CANOPY.
    B) THERE WILL BE NO EXCAVATION OR STOCKPILING OF EARTH UNDERNEATH THE TREES.
    C) TREES TO BE PRESERVED SHALL BE MARKED CONSPICUOUSLY ON ALL SIDES.
    D) TREES TO BE SAVED WILL BE FENCED AT THE OUTER DRIP LINE.
    E) NO EARTH FILLS GREATER THAN 6" IN DEPTH WILL BE MADE BENEATH TREES TO BE PRESERVED.
    F) IN FILL AREAS, TREES WILL BE PRESERVED IN TREE WELLS, OR THROUGH THE USE OF RETAINING WALLS.
    G) IN CUT AREAS, TREES WILL BE PRESERVED WITH RETAINING WALLS.
22. ADDITIONAL CERTIFICATION, BY AN APPROPRIATE LICENSED OR CERTIFIED DESIGN PROFESSIONAL SHALL BE REQUIRED FOR ALL MATTERS BEFORE THE PLANNING BOARD INDICATING THAT THE DRAWINGS AND PROJECT ARE IN COMPLIANCE WITH THE STORMWATER MANAGEMENT PHASE TWO REGULATIONS.
23. A DRAINAGE PERMIT IS REQUIRED FROM THE ROCKLAND COUNTY DRAINAGE AGENCY PRIOR TO ISSUANCE OF BUILDING PERMIT.
24. PRIOR TO ISSUANCE OF A CERTIFICATE OF OCCUPANCY, A FLOOD ELEVATION CERTIFICATE IS TO BE SUBMITTED TO THE TOWN OF ORANGETOWN BUILDING DEPT.

VICINITY MAP
SCALE: 1"=300'

OWNER & APPLICANT:

TAPPAN FIRE DISTRICT
PO BOX 525
TAPPAN, NY 10983

TAX MAP REFERENCE:

TOWN OF ORANGETOWN
SECTION 74.18, BLOCK 2, LOTS 35

SITE ADDRESS:

TAPPAN FIRE DISTRICT
300 WESTERN HIGHWAY
TAPPAN, NY 10983

AREAS:

90,393 SQ.FT. OR 2.07 ACS

DISTRICTS:

SCHOOL DISTRICT	–	SOUTH ORANGETOWN CENTRAL SCHOOL DISTRICT NO. 1
FIRE DISTRICT	–	TAPPAN
WATER DISTRICT	–	TAPPAN
SEWER DISTRICT	–	ORANGETOWN SEWER DISTRICT
LIGHTING DISTRICT	–	TOWN OF ORANGETOWN

DRAWING LIST

DRAWING No.		TITLE	ORIGIN DATE	LAST REVISION
DRAWING 1	–	SITE DEVELOPMENT PLAN	10–28–2021	07–15–2022
DRAWING 2	–	EXISTING CONDITION	10–28–2021	07–15–2022
DRAWING 3	–	GRADING PLAN	10–28–2021	07–15–2022
DRAWING 4	–	DETAILS	10–28–2021	07–15–2022
DRAWING 5	–	EROSION & SEDIMENT CONTROL PLAN	10–28–2021	07–15–2022
DRAWING 6	–	LANDSCAPING PLAN	10–28–2021	07–15–2022
DRAWING 7	–	LIGHTING PLAN	10–28–2021	07–15–2022

BULK REQUIREMENTS:

ZONE R–15, GROUP P	REQUIRED/ PERMITTED	EXISTING	PROPOSED
MAXIMUM FLOOR AREA RATIO	NONE	0.08	0.10
MINIMUM LOT AREA (SQ.FT.)	NONE	90,393 SQ.FT. (NET)	90,393 SQ.FT. (NET)
MINIMUM LOT WIDTH	NONE	N/A	N/A COR LOT
MINIMUM STREET FRONTAGE	50 FT.	158.7 FT.	266.7 FT.
FRONT YARD	100 FT.	65.7 FT.	88 FT. *
SIDE YARD	100 FT.	55.3 FT.	72 FT. *
TOTAL SIDE YARD	200 FT.	N/A COR LOT	N/A COR LOT
REAR YARD	100 FT.	N/A	N/A
MAXIMUM BUILDING HEIGHT	NONE	25 FT.	32 FT.

*–DENOTES VARIANCE REQUIRED

PARKING REQUIREMENTS:

NOT LISTED IN CODE
13 SPACES PROVIDED

LOT AREA CALCULATIONS

GROSS LOT AREA = 90,393 SQ. FT.

NET LOT AREA FOR ZONING PURPOSES = 89,252 SQ. FT. OR 2.049 ACRES

LEGEND

- 362 — EXISTING 2' CONTOUR
- 360 — EXISTING 10' CONTOUR
- W — EXISTING WATERLINE
- EXISTING FIRE HYDRANT
- G — EXISTING GAS LINE
- CB — EXISTING CATCH BASIN
- EXISTING STORM DRAIN LINE
- S SMH — EXISTING SEWER MANHOLE
- S — S — EXISTING SEWER LINE
- + 360.0 — EXISTING SPOT ELEVATION
- EXISTING STONEWALL
- EXISTING SIGN
- UP — EXISTING LIGHT POLE
- UP — EXISTING UTILITY POLE
- LIMIT OF 100 YEAR FLOODPLAIN
- LIMIT OF 500 YEAR FLOODPLAIN
- GAS — GAS — PROPOSED GAS LINE

THE EDUCATION LAW OF THE STATE OF NEW YORK PROHIBITS ANY PERSON ALTERING ANYTHING ON THESE DRAWINGS AND/OR THE ACCOMPANYING SPECIFICATIONS, UNLESS IT IS UNDER THE DIRECTION BY A LICENSED PROFESSIONAL ENGINEER. WHERE ANY ALTERATION IS MADE, THE ALTERING ENGINEER SHALL AFFIX HIS/HER SEAL, SIGN AND DESCRIBE THE FULL EXTENT OF THE ALTERATION ON THE DRAWINGS AND/OR IN THE SPECIFICATIONS. (NYS EDUCATION LAW SECTION 7209-2)

STATE OF NEW YORK · RYAN A. NASHER

RYAN A. NASHER, P.E.
N.Y.S. P.E. LIC. NO. 89066

"UNAUTHORIZED ALTERATIONS OR ADDITIONS TO A SURVEY MAP BEARING A LICENSED LAND SURVEYOR'S EMBOSSED SEAL IS A VIOLATION OF SECTION 7209, SUBDIVISION 2, OF THE NEW YORK STATE EDUCATION LAW."
"ONLY COPIES FROM THE ORIGINAL DRAWING OF THIS SURVEY MAP MARKED WITH THE LAND SURVEYOR'S EMBOSSED SEAL SHALL BE CONSIDERED TO BE VALID TRUE COPIES."
"CERTIFICATION INDICATED HERE ON SIGNIFY THAT THIS SURVEY WAS PREPARED IN ACCORDANCE WITH THE EXISTING CODE OF PRACTICE FOR LAND SURVEYORS ADOPTED BY THE DELAWARE – HUDSON LAND SURVEYORS ASSOCIATION, INC. THE CERTIFICATION IS NOT TRANSFERABLE TO ADDITIONAL INDIVIDUALS OR INSTITUTIONS FOR WHOM THE SURVEY WAS PREPARED. CERTIFICATIONS ARE NOT TRANSFERABLE TO ADDITIONAL INDIVIDUALS OR INSTITUTIONS. SUCH SUCCESSORS AND/OR ASSIGNS OR SUBSEQUENT OWNERS."

STATE OF NEW YORK · JOHN R. ATZL

JOHN R. ATZL
N.Y.S. P.L.S. LIC. NO. 50228

REVISION	DATE	DESCRIPTION
1	07–15–22	PER COMMENTS BY ARCHITECT

ATZL, NASHER & ZIGLER P.C.
ENGINEERS–SURVEYORS–PLANNERS
232 North Main Street
New City, New York 10956
Tel: (845) 634–4694
Fax: (845) 634–5543
E-mail: info@anzny.com
Web: www.ANZNY.com

PROJECT:

TAPPAN FIRE DISTRICT

TOWN OF ORANGETOWN
ROCKLAND COUNTY, NEW YORK

TITLE:

SITE DEVELOPMENT PLAN

DRAWN BY: LF	CHECKED BY: JRA
DATE: JUNE 24, 2022	SCALE: 1 IN. = 20 FT.
PROJECT NO: 4924	DRAWING NO: 1

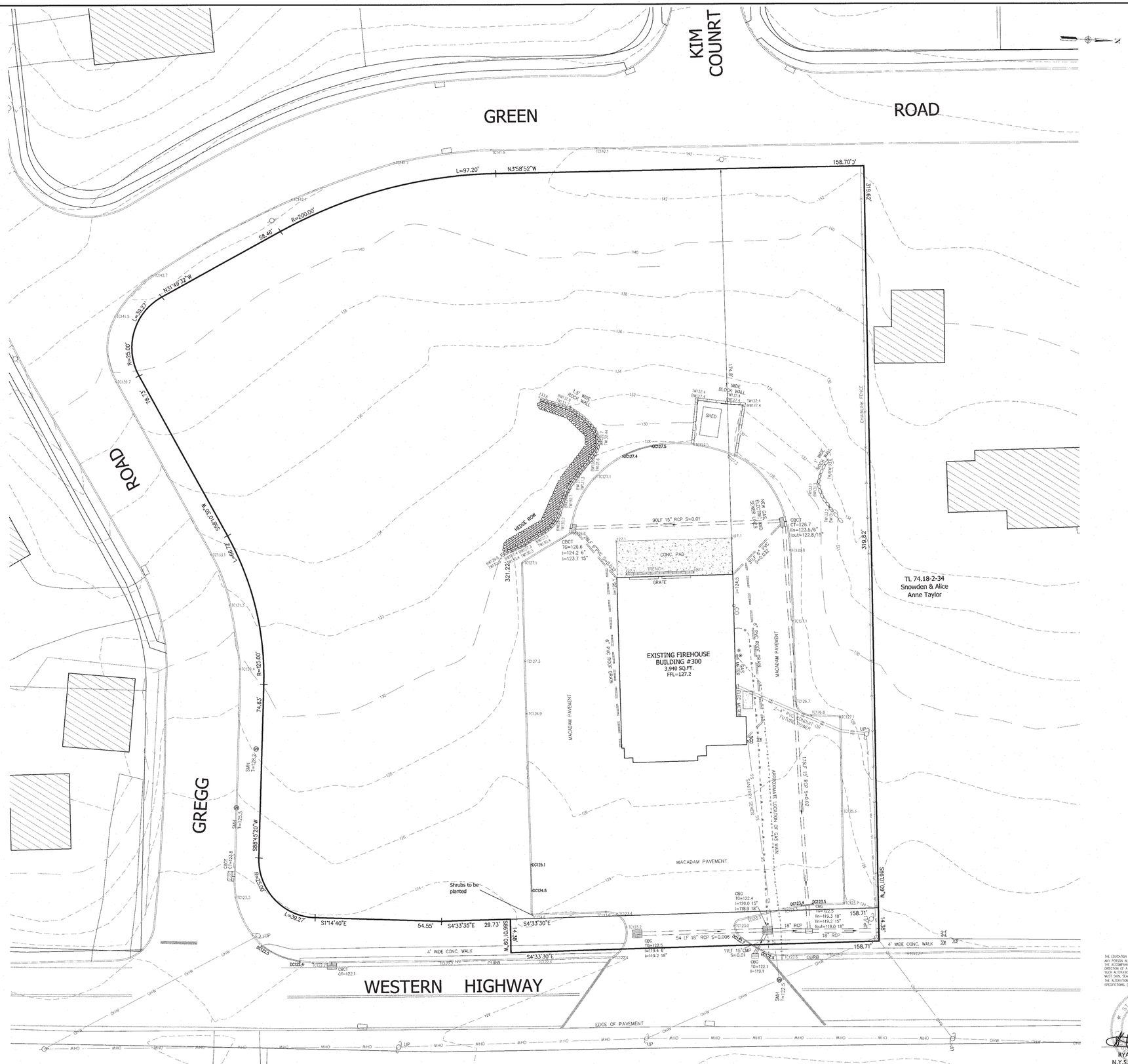

THE EDUCATION LAW OF THE STATE OF NEW YORK PROHIBITS ANY PERSON ALTERING ANYTHING ON THESE DRAWINGS AND/OR THE ACCOMPANYING SPECIFICATIONS, UNLESS IT IS UNDER THE DIRECTION OF A LICENSED PROFESSIONAL ENGINEER. WHERE SUCH ALTERATIONS ARE MADE, THE PROFESSIONAL ENGINEER MUST SIGN, SEAL, DATE AND DESCRIBE THE FULL EXTENT OF THE ALTERATION ON THE DRAWINGS AND/OR IN THE SPECIFICATIONS. (NYS EDUCATION LAW SECTION 7209-2)

STATE OF NEW YORK · RYAN A. NASHER · LICENSED PROFESSIONAL ENGINEER

RYAN A. NASHER, P.E.
N.Y.S. P.E. LIC. NO. 89066

"UNAUTHORIZED ALTERATIONS OR ADDITIONS TO A SURVEY MAP BEARING A LICENSED LAND SURVEYOR'S EMBOSSED SEAL IS A VIOLATION OF SECTION 7209, SUBDIVISION 2, OF THE NEW YORK STATE EDUCATION LAW."
"ONLY COPIES FROM THE ORIGINAL DRAWING OF THIS SURVEY MAP MARKED WITH THE LAND SURVEYOR'S EMBOSSED SEAL SHALL BE CONSIDERED TO BE VALID TRUE COPIES."
"THE SURVEY INDICATED HERE ON SERVES THAT THIS SURVEY WAS PREPARED IN ACCORDANCE WITH THE EXISTING CODE OF PRACTICE FOR LAND SURVEYORS ADOPTED BY THE ORANGE - ROCKLAND LAND SURVEYORS ASSOCIATION. THIS CERTIFICATION SHALL RUN ONLY TO THOSE NAMED INDIVIDUALS AND/OR INSTITUTIONS FOR WHOM THE SURVEY WAS PREPARED. OTHERS WHO MAY BE FAMILIAR WITH THE FACTS OF THIS INDIVIDUAL INVESTIGATION, THEIR SUCCESSORS AND/OR ASSIGNS OF SUBSEQUENT OWNERS."

STATE OF NEW YORK · JOHN R. ATZL · LICENSED PROFESSIONAL ENGINEER

JOHN R. ATZL
N.Y.S. P.L.S. LIC. NO. 50228

REVISION	DATE	DESCRIPTION
1	07-15-22	PER COMMENTS BY ARCHITECT

AN&Z

ATZL, NASHER & ZIGLER P.C.
ENGINEERS-SURVEYORS-PLANNERS
232 North Main Street
New City, New York 10956
Tel: (845) 634-4694
Fax: (845) 634-5543
E-mail: info@anzny.com
Web: www.ANZNY.com

PROJECT:

TAPPAN FIRE DISTRICT

TOWN OF ORANGETOWN
ROCKLAND COUNTY, NEW YORK

TITLE:

EXISTING CONDITION

DRAWN BY: LF	CHECKED BY: JRA
DATE: OCTOBER 28, 2021	SCALE: 1 IN. = 20 FT.
PROJECT NO: 4924	DRAWING NO: 2

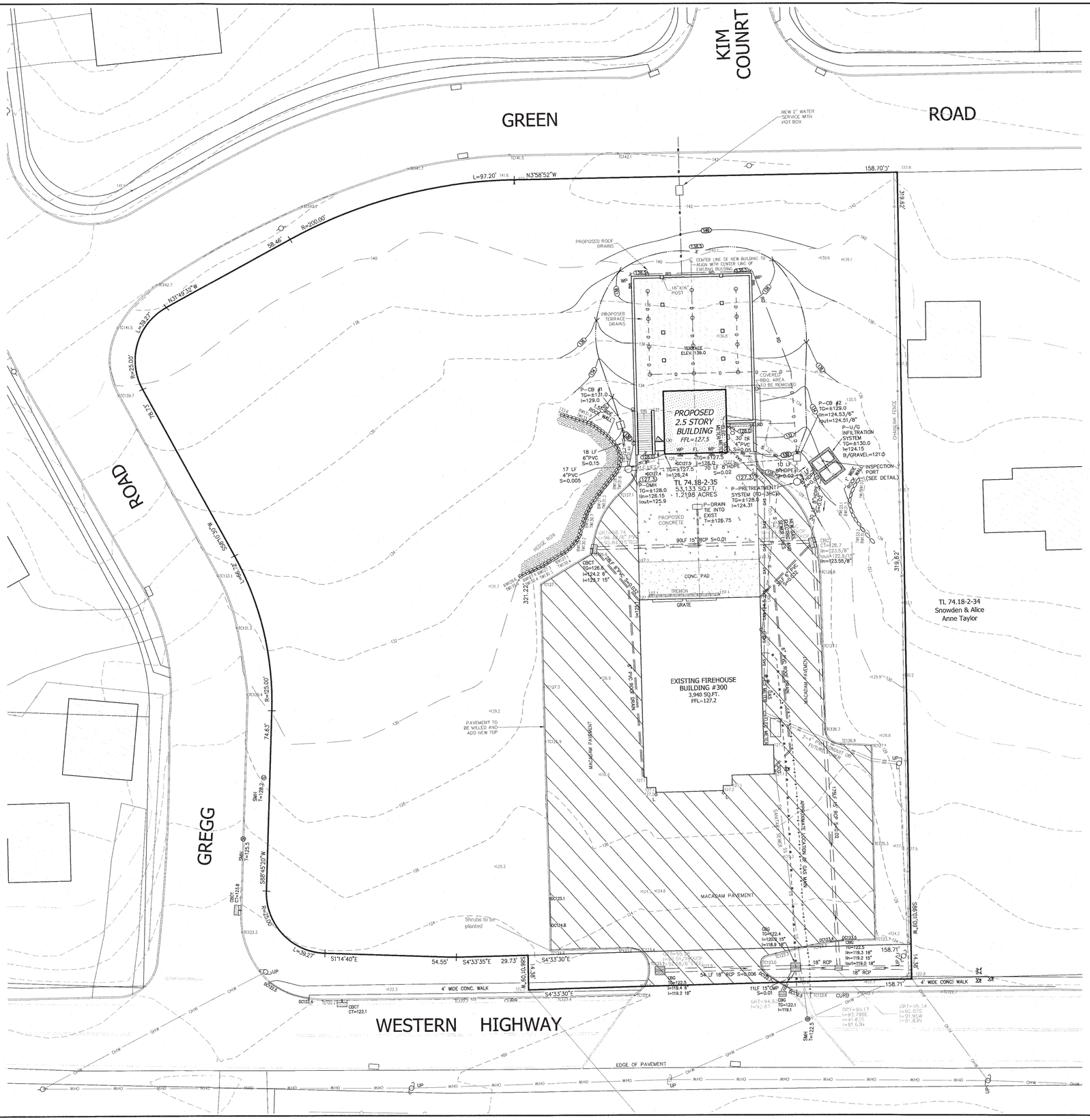

LEGEND

- EXISTING 2' CONTOUR
- EXISTING 10' CONTOUR
- EXISTING WATERLINE
- EXISTING FIRE HYDRANT
- EXISTING GAS LINE
- EXISTING CATCH BASIN
- EXISTING STORM DRAIN LINE
- EXISTING SEWER MANHOLE
- EXISTING SEWER LINE
- EXISTING SPOT ELEVATION
- EXISTING STONEWALL
- EXISTING SIGN
- EXISTING LIGHT POLE
- EXISTING UTILITY POLE
- LIMIT OF 100 YEAR FLOODPLAIN
- LIMIT OF 500 YEAR FLOODPLAIN
- PROPOSED GAS LINE

THE EDUCATION LAW OF THE STATE OF NEW YORK PROHIBITS ANY PERSON ALTERING ANYTHING ON THESE DRAWINGS AND/OR THE ACCOMPANYING SPECIFICATIONS UNLESS IT IS UNDER THE DIRECTION OF A LICENSED PROFESSIONAL ENGINEER. WHERE SUCH ALTERATIONS ARE MADE, THE PROFESSIONAL ENGINEER MUST SIGN, SEAL, DATE AND DESCRIBE THE FULL EXTENT OF THE ALTERATION ON THE DRAWINGS AND/OR IN THE SPECIFICATIONS. (NYS EDUCATION LAW SECTION 7209-2)

STATE OF NEW YORK · RYAN A. NASHER

RYAN A. NASHER, P.E.
N.Y.S. P.E. LIC. NO. 89066

"UNAUTHORIZED ALTERATIONS OR ADDITIONS TO A SURVEY MAP BEARING A LICENSED LAND SURVEYOR'S EMBOSSED SEAL IS A VIOLATION OF SECTION 7209, SUBDIVISION 2, OF THE NEW YORK STATE EDUCATION LAW."
"ONLY COPIES FROM THE ORIGINAL MAPPING OF THIS SURVEY MAP MARKED WITH THE LAND SURVEYOR'S EMBOSSED SEAL SHALL BE CONSIDERED TO BE VALID TRUE COPIES."
"THIS MAP IS CERTIFIED HERE ON SIDNEY THAT THE SURVEY WAS PREPARED IN ACCORDANCE WITH THE EXISTING CODE OF PRACTICE FOR LAND SURVEYORS ADOPTED BY THE DELAWARE – HUDSON LAND SURVEYORS ASSOCIATION. SAID CERTIFICATION SHALL RUN ONLY TO THOSE NAMED INDIVIDUALS AND/OR INSTITUTIONS FOR WHOM THE SURVEY WAS PREPARED. CERTIFICATION IS PROHIBITED TO ANY OTHER INDIVIDUALS AND/OR INSTITUTIONS, THEIR SUCCESSORS AND/OR ASSIGNS OR SUBSEQUENT OWNERS."

STATE OF NEW YORK · JOHN R. ATZL

JOHN R. ATZL
N.Y.S. P.L.S. LIC. NO. 50228

REVISION	DATE	DESCRIPTION
1	07-15-22	PER COMMENTS BY ARCHITECT

ATZL, NASHER & ZIGLER P.C.
ENGINEERS-SURVEYORS-PLANNERS
232 North Main Street
New City, New York 10956
Tel: (845) 634-4694
Fax: (845) 634-5543
E-mail: info@anzny.com
Web: www.ANZNY.com

PROJECT:

TAPPAN FIRE DISTRICT

TOWN OF ORANGETOWN
ROCKLAND COUNTY, NEW YORK

TITLE:

GRADING PLAN

DRAWN BY: LF	CHECKED BY: JRA
DATE: OCTOBER 28, 2021	SCALE: 1 IN. = 20 FT.
PROJECT NO: 4924	DRAWING NO: 3

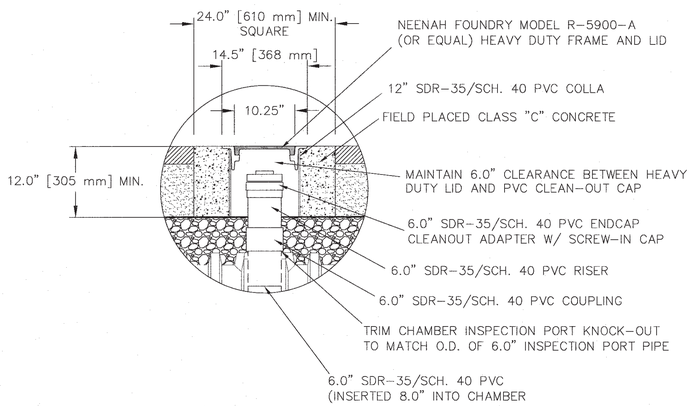

INSPECTION PORT DETAIL
SCALE: 1" = 1'

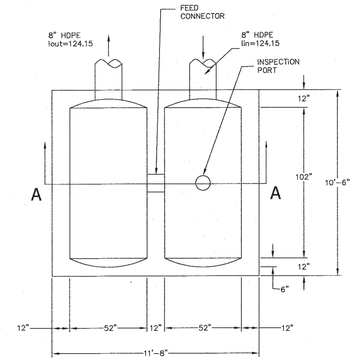

PLAN VIEW

P-UNDERGROUND STORAGE SYSTEM PLAN (CULTEC OR EQUAL) DETAIL
SCALE: 1" = 4'

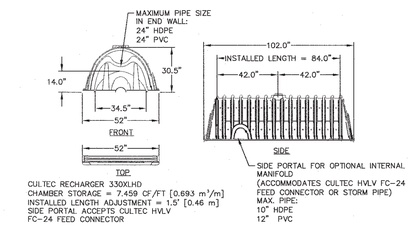

CULTEC RECHARGER 330XLHD OR EQUAL HEAVY DUTY
SCALE: 1" = 4'

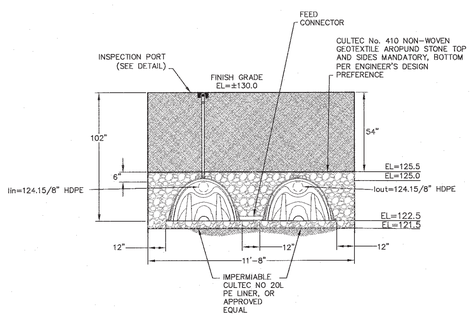

SECTION VIEW

SECTION A-A: CULTEC RECHARGER 330XLHD OR APPROVED EQUAL
SCALE: 1" = 4'

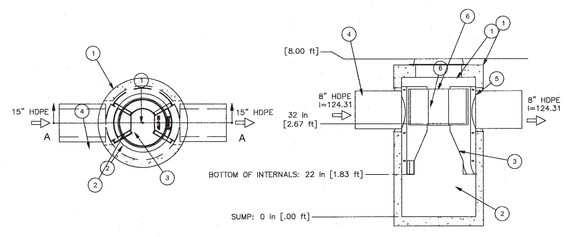

SECTION A-A

Parts List			
ITEM	QTY.	DESCRIPTION	SIZE (in)
1	1	I.D. CONCRETE MANHOLE	36
2	1	INLET CHUTE (W/ FLOATABLES TRAP)	
3	1	OUTLET CHUTE	
4	1	INLET PIPE (BY OTHERS)	12
5	1	OUTLET PIPE (BY OTHERS)	12
6	1	HIGH FLOW BYPASS	
7	1	FRAME AND COVER (OR GRATE)	24

CAPACITIES:

1. PEAK HYDRAULIC FLOW: 15.0 cfs (424 l/s)
2. TYPICAL TREATMENT FLOW: 0.84 cfs (23.78 l/s)
3. SEDIMENT STORAGE CAPACITY: 0.4 cu. yd. (0.3 cu. m.)
4. OIL STORAGE CAPACITY: 125 gal. (473 liters)
5. MAXIMUM INLET/OUTLET PIPE DIAMETERS: 18 in. (450 mm)

PRETREATMENT (FIRST DEFENSE FD-3HC OR EQUAL)
SCALE: N.T.S.

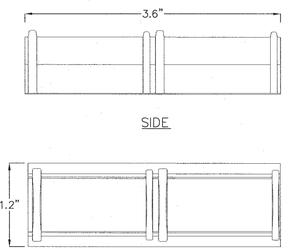

SIDE

TOP

FRONT

CULTEC HVLV FC-48 FEED CONNECTOR
N.T.S.

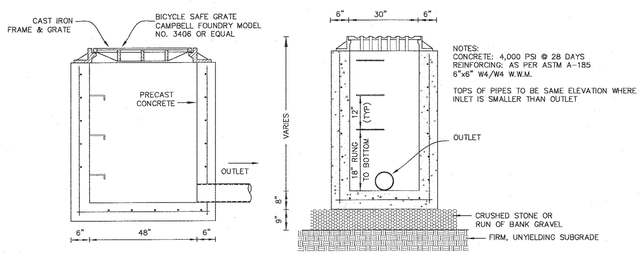

NOTES:
CONCRETE: 4,000 PSI @ 28 DAYS
REINFORCING: AS PER ASTM A-185
6"x6" W4/W4 W.W.M.

TOPS OF PIPES TO BE SAME ELEVATION WHERE INLET IS SMALLER THAN OUTLET

TYP. PRECAST FLAT GRATE CATCH BASIN DETAIL
N.T.S.

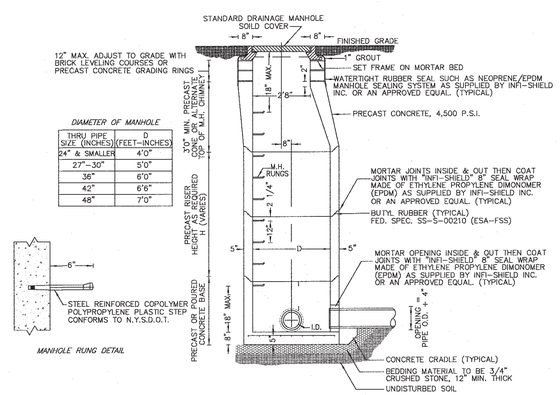

DIAMETER OF MANHOLE

THRU PIPE SIZE (INCHES)	D (FEET-INCHES)
24" & SMALLER	4'0"
27"-30"	5'0"
36"	6'0"
42"	6'6"
48"	7'0"

PRECAST STANDARD DRAINAGE MANHOLE SECTION
N.T.S.

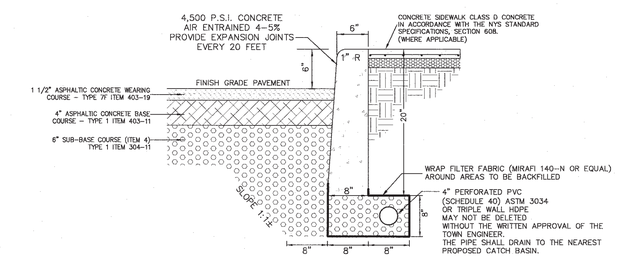

ASPHALTIC CONCRETE PAVEMENT & CONCRETE CURB DETAIL FOR TRAVELLED WAY
N.T.S.

THE EDUCATION LAW OF THE STATE OF NEW YORK PROHIBITS ANY PERSON ALTERING ANYTHING ON THESE DRAWINGS AND/OR THE ACCOMPANYING SPECIFICATIONS, UNLESS IT IS UNDER THE DIRECTION OF A LICENSED PROFESSIONAL ENGINEER. WHEN SUCH ALTERATIONS ARE MADE, THE PROFESSIONAL ENGINEER MUST SIGN, SEAL, DATE AND DESCRIBE THE FULL EXTENT OF THE ALTERATION ON THE DRAWINGS AND/OR IN THE SPECIFICATIONS. (NYS EDUCATION LAW SECTION 7209-2)

"UNAUTHORIZED ALTERATIONS OR ADDITIONS TO A SURVEY MAP BEARING A LICENSED LAND SURVEYOR'S EMBOSSED SEAL IS A VIOLATION OF SECTION 7209, SUBDIVISION 2, OF THE NEW YORK STATE EDUCATION LAW."
"CERTIFICATION INDICATED HERE ON SIGNIFY THAT THIS SURVEY WAS PREPARED IN ACCORDANCE WITH THE EXISTING CODE OF PRACTICE FOR LAND SURVEYS ADOPTED BY THE NEW YORK STATE ASSOCIATION OF PROFESSIONAL LAND SURVEYORS. SAID CERTIFICATION SHALL RUN ONLY TO THOSE NAMED INDIVIDUALS, AND/OR INSTITUTIONS FOR WHOM THE SURVEY WAS PREPARED. CERTIFICATIONS ARE NOT TRANSFERABLE TO ADDITIONAL INDIVIDUALS, MORTGAGES, THEIR SUCCESSORS AND/OR ASSIGNS OF SUBSEQUENT OWNERS."

RYAN A. NASHER, P.E.
N.Y.S. P.E. LIC. NO. 89066

JOHN R. ATZL
N.Y.S. P.L.S. LIC. NO. 50228

REVISION	DATE	DESCRIPTION
1	07-15-22	PER COMMENTS BY ARCHITECT

ATZL, NASHER & ZIGLER P.C.
ENGINEERS-SURVEYORS-PLANNERS
232 North Main Street
New City, New York 10956
Tel: (845) 634-4694
Fax: (845) 634-5543
E-mail: info@anzny.com
Web: www.ANZNY.com

PROJECT:

TAPPAN FIRE DISTRICT

TOWN OF ORANGETOWN
ROCKLAND COUNTY, NEW YORK

TITLE:

DETAILS

DRAWN BY: LF	CHECKED BY: JRA
DATE: OCTOBER 28, 2021	SCALE: 1 IN. = 20 FT.
PROJECT NO: 4924	DRAWING NO: 4

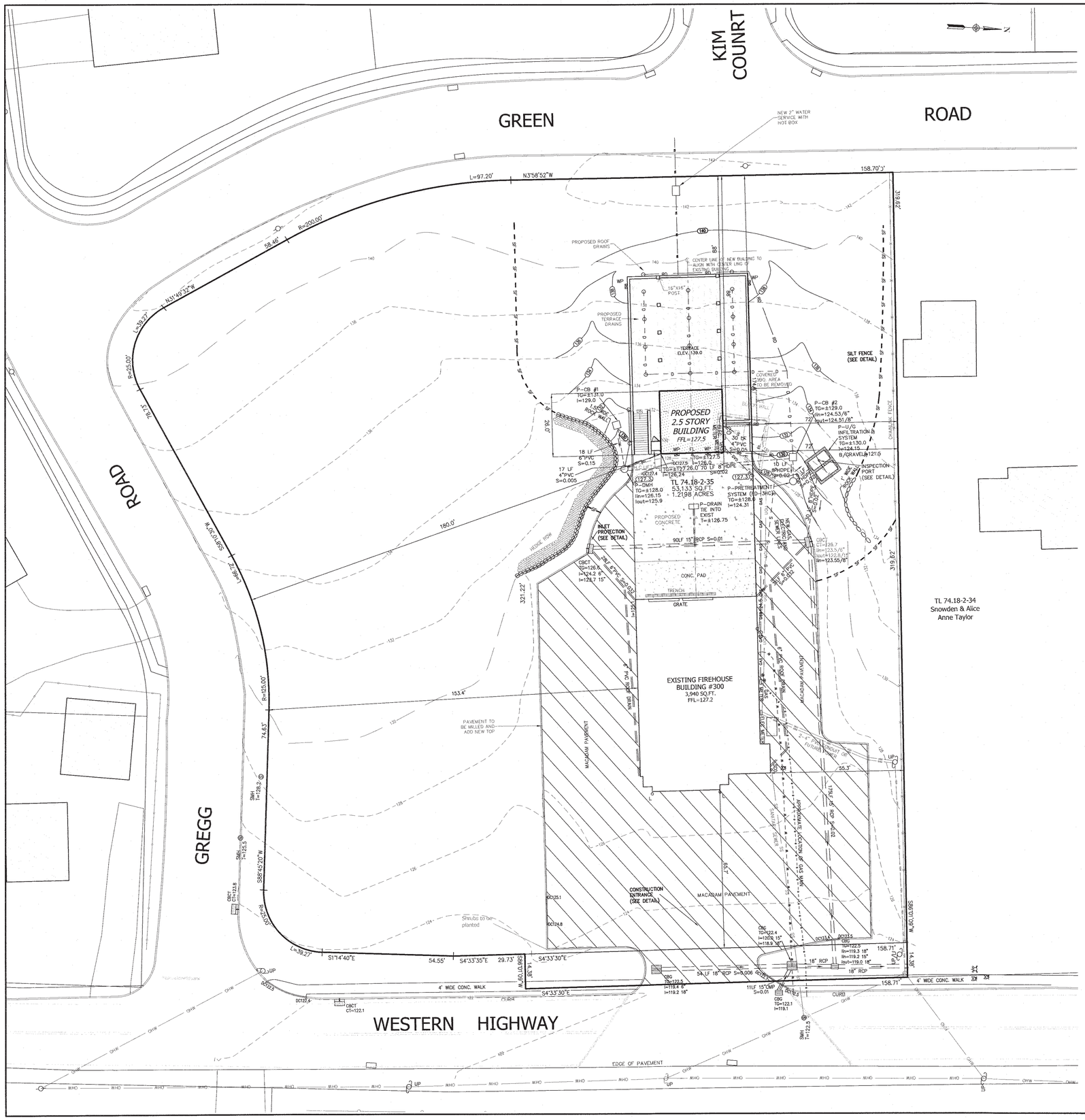

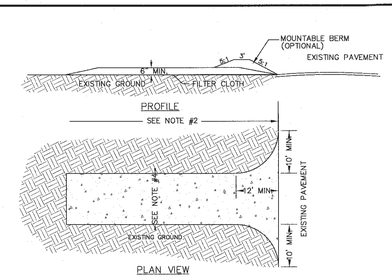

SPECIFICATIONS FOR CONSTRUCTION ENTRANCE

1. STONE SIZE – USE 2" STONE, OR RECLAIMED OR RECYCLED CONCRETE EQUIVALENT.
2. LENGTH – NOT LESS THAN 50 FT. (EXCEPT ON A SINGLE RESIDENCE LOT WHERE A 30 FT. MINIMUM LENGTH WOULD APPLY).
3. THICKNESS – NOT LESS THAN 6 IN.
4. WIDTH – 12 FT. MINIMUM, BUT NOT LESS THAN THE FULL WIDTH AT POINTS WHERE INGRESS AND EGRESS OCCUR. 24 FT. IF SINGLE ENTRANCE TO SITE.
5. FILTER CLOTH – WILL BE PLACED OVER THE ENTIRE AREA PRIOR TO THE PLACEMENT OF STONE.
6. SURFACE WATER – ALL SURFACE WATER FLOWING OR DIVERTED TOWARD CONSTRUCTION ENTRANCES SHALL BE PIPED ACROSS THE ENTRANCE. IF PIPING IS IMPRACTICAL, A MOUNTABLE BERM WITH 5:1 SLOPES WILL BE PERMITTED.
7. MAINTENANCE – THE ENTRANCE SHALL BE MAINTAINED IN A CONDITION WHICH WILL PREVENT TRACKING OR FLOWING OF SEDIMENT ONTO PUBLIC RIGHT-OF-WAYS. ALL SEDIMENT SPILLED, DROPPED, WASHED, OR TRACKED ONTO PUBLIC RIGHT-OF-WAYS MUST BE REMOVED IMMEDIATELY.
8. WHEN WASHING IS REQUIRED, IT SHALL BE DONE ON AN AREA STABILIZED WITH STONE AND WHICH DRAINS TO AN APPROVED SEDIMENT TRAPPING DEVICE.
9. PERIODIC INSPECTION AND NEEDED MAINTENANCE SHALL BE PROVIDED AFTER EACH RAIN.

CONSTRUCTION ENTRANCE DETAIL

N.T.S.

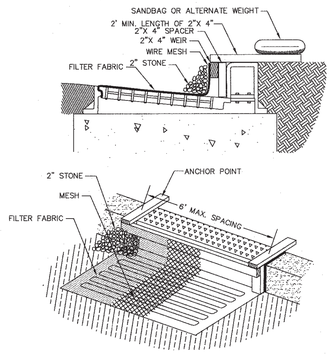

SPECIFICATIONS FOR CURB INLET PROTECTION

1. FILTER FABRIC SHALL HAVE AN EOS of 60–85.
2. WOODEN FRAME SHALL BE CONSTRUCTED OF 2"X 4" CONSTRUCTION GRADE LUMBER.
3. WIRE MESH ACROSS THROAT SHALL BE A CONTINUOUS PIECE 30" MINIMUM WIDTH WITH A LENGTH 4 FT. LONGER THAN THE THROAT. IT SHALL BE SHAPED AND SECURELY NAILED TO A 2"X 4" WEIR.
4. THE WEIR SHALL BE SECURELY NAILED TO 2"X 4" SPACERS 9" LONG SPACED NO MORE THAN 6 FT. APART.
5. THE ASSEMBLY SHALL BE PLACED AGAINST THE INLET AND SECURED BY 2"X 4" ANCHORS 2 FT. LONG EXTENDING ACROSS THE TOP OF THE INLET AND HELD IN PLACE BY SANDBAGS OR ALTERNATE WEIGHTS.

CURB INLET PROTECTION DETAIL

N.T.S.

PREFABRICATED UNIT: GEOFAB, ENVIROFENCE, OR APPROVED EQUAL

1. WHEN TWO SECTIONS OF FILTER CLOTH ADJOIN EACH OTHER THEY SHALL BE OVERLAPPED BY SIX INCHES AND FOLDED.
2. MAINTENANCE SHALL BE PERFORMED AS NEEDED AND MATERIAL REMOVED WHEN "BULGES" DEVELOP IN THE SILT FENCE.

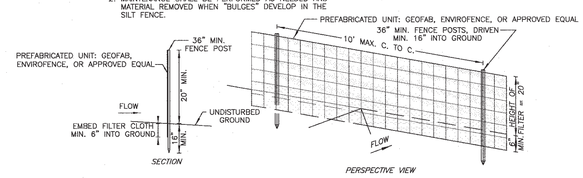

SILT FENCE DETAIL

N.T.S.

GENERAL SOIL RESTORATION NOTES AND REQUIREMENTS:

1) Soil restoration is not required to the area where no soil disturbance is proposed.
2) Soil restoration is not required to the area where minimal soil disturbance is proposed such as clearing and grubbing.
3) Aerate and apply 6 inch of top soil to areas where topsoil is stripped only and no change in grade. Aeration includes the use of machines such as tractor-drawn implements with coulters making a narrow slit in the soil, a roller with many spikes making indentations in the soil, or prongs which function like a mini-subsoiler.
4) Soil Restoration (de-compaction and compost enhancement) is required to areas where cut and fill are proposed.
5) Soil Restoration (de-compaction and compost enhancement) is required to areas where heavy traffic areas on site, especially in a zone 5-25 feet around buildings but not within a 5 feet perimeter around foundation wall.
6) Soil Restoration (de-compaction and compost enhancement) is required on redevelopment projects in areas where existing impervious area will be converted to pervious area. During periods of relatively low to moderate subsoil moisture, the disturbed subsoils are returned to rough grade and the following Soil Restoration steps applied:
   a) Apply 3 inches of compost over subsoil
   b) Till compost into subsoil to a depth of at least 12 inches using a cat-mounted ripper, tractor-mounted disc, or tiller, mixing, and circulating air and compost into subsoils
   c) Rock-pick until uplifted stone/rock materials of four inches and larger size are cleaned off the site
   d) Apply topsoil to a depth of 6 inches
   e) Vegetate as required by approved plan.

LEGEND

362	EXISTING 2' CONTOUR
360	EXISTING 10' CONTOUR
W	EXISTING WATERLINE
	EXISTING FIRE HYDRANT
G	EXISTING GAS LINE
CB	EXISTING CATCH BASIN
	EXISTING STORM DRAIN LINE
SMH	EXISTING SEWER MANHOLE
S	EXISTING SEWER LINE
+ 360.0	EXISTING SPOT ELEVATION
	EXISTING STONEWALL
	EXISTING SIGN
LP	EXISTING LIGHT POLE
UP	EXISTING UTILITY POLE
	LIMIT OF 100 YEAR FLOODPLAIN
	LIMIT OF 500 YEAR FLOODPLAIN
GAS	PROPOSED GAS LINE

THE EDUCATION LAW OF THE STATE OF NEW YORK PROHIBITS ANY PERSON ALTERING ANYTHING ON THESE DRAWINGS AND/OR THE ACCOMPANYING SPECIFICATIONS, UNLESS IT IS UNDER THE DIRECTION OF A LICENSED PROFESSIONAL ENGINEER. ALL ALTERATIONS ARE MADE, THE PROFESSIONAL ENGINEER MUST SIGN, SEAL, DATE AND DESCRIBE THE FULL EXTENT OF THE ALTERATION ON THE DRAWINGS AND/OR IN THE SPECIFICATIONS. (NYS EDUCATION LAW SECTION 7209-2)

"UNAUTHORIZED ALTERATIONS OR ADDITIONS TO A SURVEY MAP BEARING A LICENSED LAND SURVEYOR'S EMBOSSED SEAL IS A VIOLATION OF SECTION 7209, SUBDIVISION 2, OF THE NEW YORK STATE EDUCATION LAW"

"ONLY COPIES FROM THE ORIGINAL DRAWING OF THIS SURVEY MAP MARKED WITH THE LAND SURVEYOR'S EMBOSSED SEAL SHALL BE CONSIDERED TO BE VALID TRUE COPIES."

"CERTIFICATIONS INDICATED HEREON SIGNIFY THAT THIS SURVEY WAS PREPARED IN ACCORDANCE WITH THE EXISTING CODE OF PRACTICE FOR LAND SURVEYORS ADOPTED BY THE ASSOCIATION OF LICENSED LAND SURVEYORS OF NEW YORK. CERTIFICATIONS SHALL RUN ONLY TO THE PERSON FOR WHOM THE SURVEY WAS PREPARED, AND ON BEHALF OF THE PERSON, AND ITS SUCCESSORS AND ASSIGNS. CERTIFICATIONS ARE NOT TRANSFERABLE TO ADDITIONAL INDIVIDUALS, INSTITUTIONS, THEIR SUCCESSORS AND/OR ASSIGNS OR SUBSEQUENT OWNERS."

RYAN A. NASHER, P.E.
N.Y.S. P.E. LIC. NO. 89066

JOHN R. ATZL
N.Y.S. P.L.S. LIC. NO. 50228

REVISION	DATE	DESCRIPTION
1	07-15-22	PER COMMENTS BY ARCHITECT

ATZL, NASHER & ZIGLER P.C.
ENGINEERS–SURVEYORS–PLANNERS
232 North Main Street
New City, New York 10956
Tel: (845) 634-4694
Fax: (845) 634-5543
E-mail: info@anzny.com
Web: www.ANZNY.com

PROJECT:

TAPPAN FIRE DISTRICT

TOWN OF ORANGETOWN
ROCKLAND COUNTY, NEW YORK

TITLE:

EROSION & SEDIMENT CONTROL PLAN

DRAWN BY: MM	CHECKED BY: JRA
DATE: OCTOBER 28, 2021	SCALE: 1 IN. = 20 FT.
PROJECT NO: 4924	DRAWING NO: 5

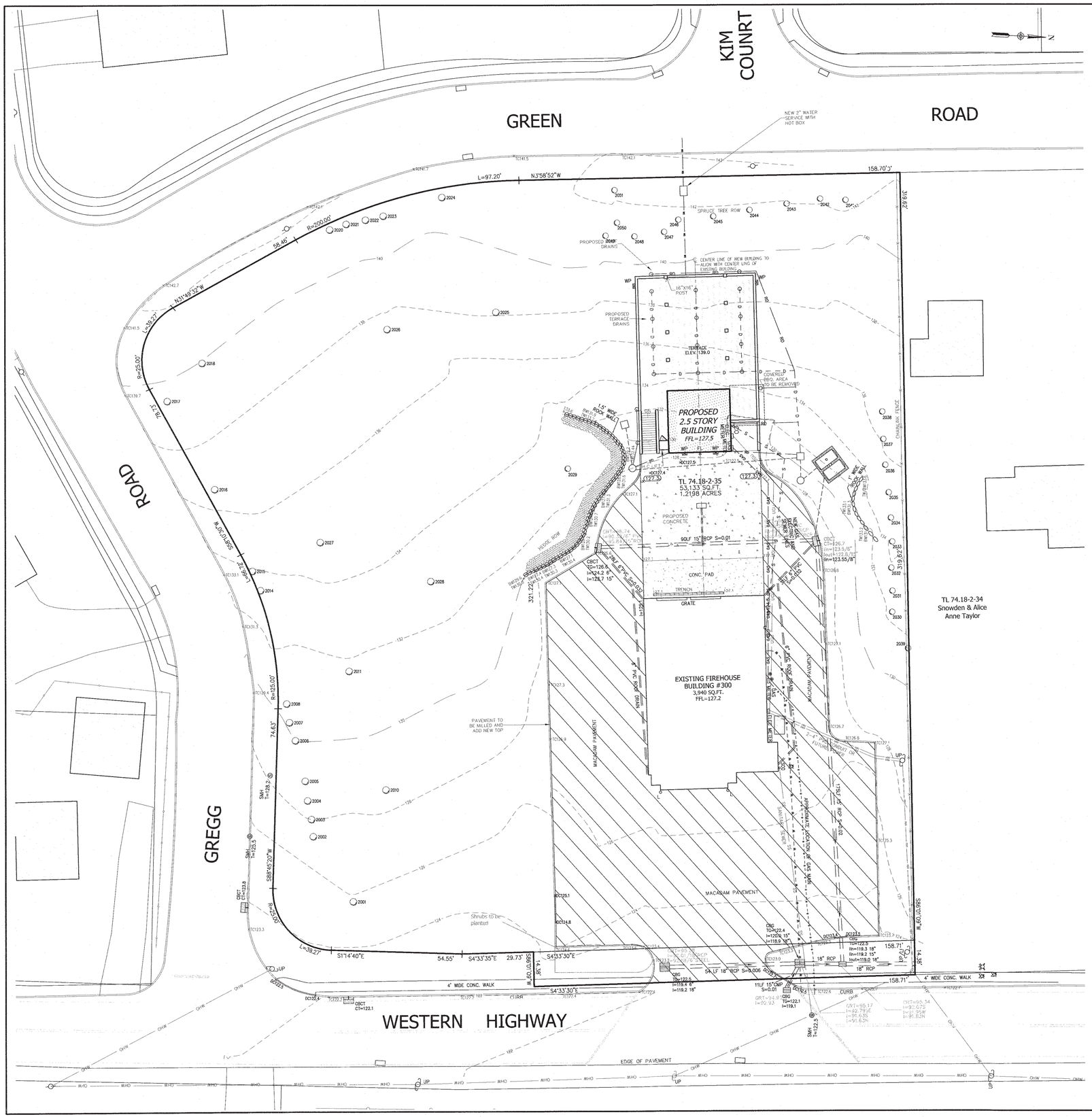

PLANTING NOTES

1. ALL PLANTS SHALL BE NURSERY GROWN AND PLANTS AND WORKMANSHIP SHALL CONFORM TO THE AMERICAN ASSOCIATION OF NURSERYMEN STANDARDS AND SHALL BE SUBJECT TO THE APPROVAL OF THE LANDSCAPE ARCHITECT BEFORE AND AFTER PLANTING.

2. ALL PLANTING SHALL BE PLACED UNDER THE DIRECTION OF THE LANDSCAPE ARCHITECT. GIVE 48 HOURS NOTICE BEFORE PLANTING.

3. GUARANTEE ALL PLANTS AND WORKMANSHIP FOR A PERIOD OF TWO PLANTING SEASONS (ONE FULL YEAR).

4. PLACE 4" OF TOPSOIL ON ALL LAWN AREAS AND 12" TOP SOIL IN ALL PLANTING BEDS.

5. PLANT PITS SHALL BE 36" WIDER FOR TREES (MINIMUM OF TWO TIMES ROOT BALL DIAMETER) AND 24" WIDER FOR SHRUBS AND 6" DEEPER THAN THE ROOT BALL. SET PLANTS AT SAME LEVEL AS ORIGINALLY GROWN ON BASE OF UNDISTURBED SOIL. REMOVE ALL EXISTING SOIL FROM PLANT PIT AND BACKFILL WITH A MIXTURE OF ONE PART PEAT HUMUS, ONE PART DEHYDRATED COW MANURE, AND FOUR PARTS TOPSOIL. FERTILIZE ALL PLANTS WITH 2 TO 3 OZ. PER FOOT OF SHRUB HEIGHT AND 2 TO 3 IBS. PER INCH OF TREE TRUNK OF 5-10-5 FERTILIZER. FOR EVERGREEN PLANTING, ADD 1 LB. PER 100 SQUARE FEET OF PLANT BED EACH OF AMMONIUM SULFATE AND SUPERPHOSPHATE.

6. STAKE ALL TREES WITH TWO CEDAR STAKES; COVER TWISTED 10 GAGE GALVANIZED WIRE WITH RUBBER HOSE AND FASTEN AROUND TREE AT 5 FOOT HEIGHT MINIMUM. WRAP TRUNK WITH KRAFT PAPER TO FIRST BRANCH. REMOVE WIRES AND STAKES AFTER THE ONE YEAR.

7. MULCH ALL PLANTS AND PLANTED AREAS WITH A 4" DEPTH OF SHREDDED PINE, OAK BARK.

8. FERTILIZE AREAS BEFORE SEEDING OR SODDING WITH 15 IBS. PER 1000 SQUARE FEET OF 10-20-10 FERTILIZER OR APPROVED EQUIVALENT. REPEAT AFTER 8 WEEKS.

9. LAWN AREAS SHALL BE SEEDED AT 5 LBS. PER 1000 SQUARE FEET WITH THE FOLLOWING SEED MIX: 40% JAMESTOWN CHEWINGS FESCUE, 40% BARON KENTUCKY BLUEGRASS, AND 20% YORKTOWN PERENNIAL RYE. MULCH NEWLY SEEDED LAWN AT 90 IBS. PER 1000 SQUARE FEET WITH HAY OR STRAW MULCH.

10. THE CONTRACTOR IS RESPONSIBLE TO PLANT THE TOTAL QUANTITIES OF ALL PLANTS SHOWN ON THE PLANTING PLAN. THE QUANTITIES OF PLANTING SHOWN GRAPHICALLY ON THE PLAN SHALL GOVERN.

11. EXISTING TREES SHOWN ON THIS PLAN ARE TO REMAIN UNDISTURBED. ALL EXISTING TREES SHOWN TO REMAIN ARE TO BE PROTECTED WITH A 4 FOOT HIGH SNOW FENCE PLACED AT THE DRIP LINE OF THE BRANCHES OR AT 8 FEET MINIMUM FROM THE TREE TRUNK.

TREE LIST

NO.	SIZE	TYPE	CONDITION
2001	19"	MAPLE	GOOD
2002	11"	TRIPLEMAPLE	GOOD
2003	19"	TWIN MAPLE	GOOD
2004	21"	QUAD MAPLE	GOOD
2005	24"	MAPLE	GOOD
2006	12"	TRIPLE MAPLE	GOOD
2007	12"	TRIPLE MAPLE	GOOD
2008	14"	QUADMAPLE	GOOD
2010	26"	MAPLE	GOOD
2011	20"	MAPLE	GOOD
2014	16"	TRIPLE MAPLE	GOOD
2015	12"	QUAD MAPLE	GOOD
2016	30"	MAPLE	GOOD
2017	12"	TRIPLE MAPLE	GOOD
2018	16"	MAPLE	GOOD
2020	10"	MAPLE	POOR
2021	12"	MAPLE	GOOD
20225	6"	CLUMP MAPLE	GOOD
2023	22"	TWIN MAPLE	GOOD
2024	21"	TRIPLE MAPLE	GOOD
2025	27"	MAPLE	GOOD
2026	23"	MAPLE	GOOD
2027	24"	SYCAMORE	GOOD
2028	15"	MAPLE	GOOD
2029	48"	OAK	GOOD
2030	7"	FIR	GOOD
2031	10"	FIR	GOOD
2032	12"	FIR	GOOD
2033	8"	FIR	GOOD
2034	10"	FIR	GOOD
2035	9"	FIR	GOOD
2036	9"	FIR	GOOD
2037	7"	FIR	GOOD
2038	10"	FIR	GOOD
2039	15"	BIRCH	GOOD
2041	8"	FIR	GOOD
2042	11"	FIR	GOOD
2043	11"	FIR	GOOD
2044	12"	FIR	GOOD
2045	12"	FIR	GOOD
2046	11"	FIR	GOOD
2047	8"	FIR	GOOD
2048	8"	FIR	GOOD
2049	12"	FIR	GOOD
2050	8"	FIR	GOOD
2051	19"	ASH	GOOD

TREE LEGEND

- EXISTING TREE
- TREE TO BE PRESERVED
- TREE TO BE REMOVED

LEGEND

- 362 — EXISTING 2' CONTOUR
- 360 — EXISTING 10' CONTOUR
- W — EXISTING WATERLINE
- EXISTING FIRE HYDRANT
- G — EXISTING GAS LINE
- CB — EXISTING CATCH BASIN
- EXISTING STORM DRAIN LINE
- S SMH — EXISTING SEWER MANHOLE
- S — EXISTING SEWER LINE
- + 360.0 — EXISTING SPOT ELEVATION
- EXISTING STONEWALL
- EXISTING SIGN
- LP — EXISTING LIGHT POLE
- UP — EXISTING UTILITY POLE
- LIMIT OF 100 YEAR FLOODPLAIN
- LIMIT OF 500 YEAR FLOODPLAIN
- GAS — GAS — PROPOSED GAS LINE

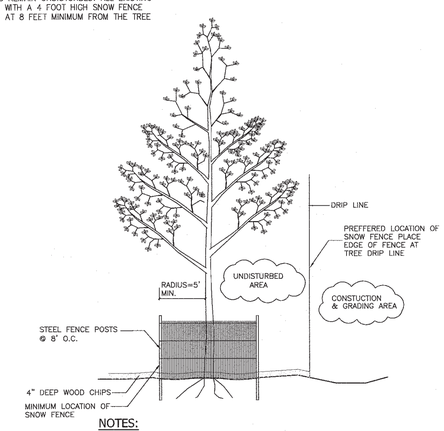

NOTES:

1) INSTALL SNOW FENCE TREE PROTECTION PRIOR TO ANY CLEARING OR EXCAVATION.
2) MAINTAIN SNOW FENCE FOR THE DURATION OF THE CONSTRUCTION PERIOD.

TREE PROTECTION DETAIL

N.T.S.

REVISION	DATE	DESCRIPTION
1	07-15-22	PER COMMENTS BY ARCHITECT

ATZL, NASHER & ZIGLER P.C.
ENGINEERS-SURVEYORS-PLANNERS
232 North Main Street
New City, New York 10956
Tel: (845) 634-4694
Fax: (845) 634-5543
E-mail: info@anzny.com
Web: www.ANZNY.com

PROJECT:

TAPPAN FIRE DISTRICT

TOWN OF ORANGETOWN
ROCKLAND COUNTY, NEW YORK

TITLE:

TREE PLAN

DRAWN BY: LF	CHECKED BY: JRA
DATE: OCTOBER 28, 2021	SCALE: 1 IN. = 20 FT.
PROJECT NO: 4924	DRAWING NO: 6

RYAN A. NASHER, P.E.
N.Y.S. P.E. LIC. NO. 89066

JOHN R. ATZL
N.Y.S. P.L.S. LIC. NO. 50228

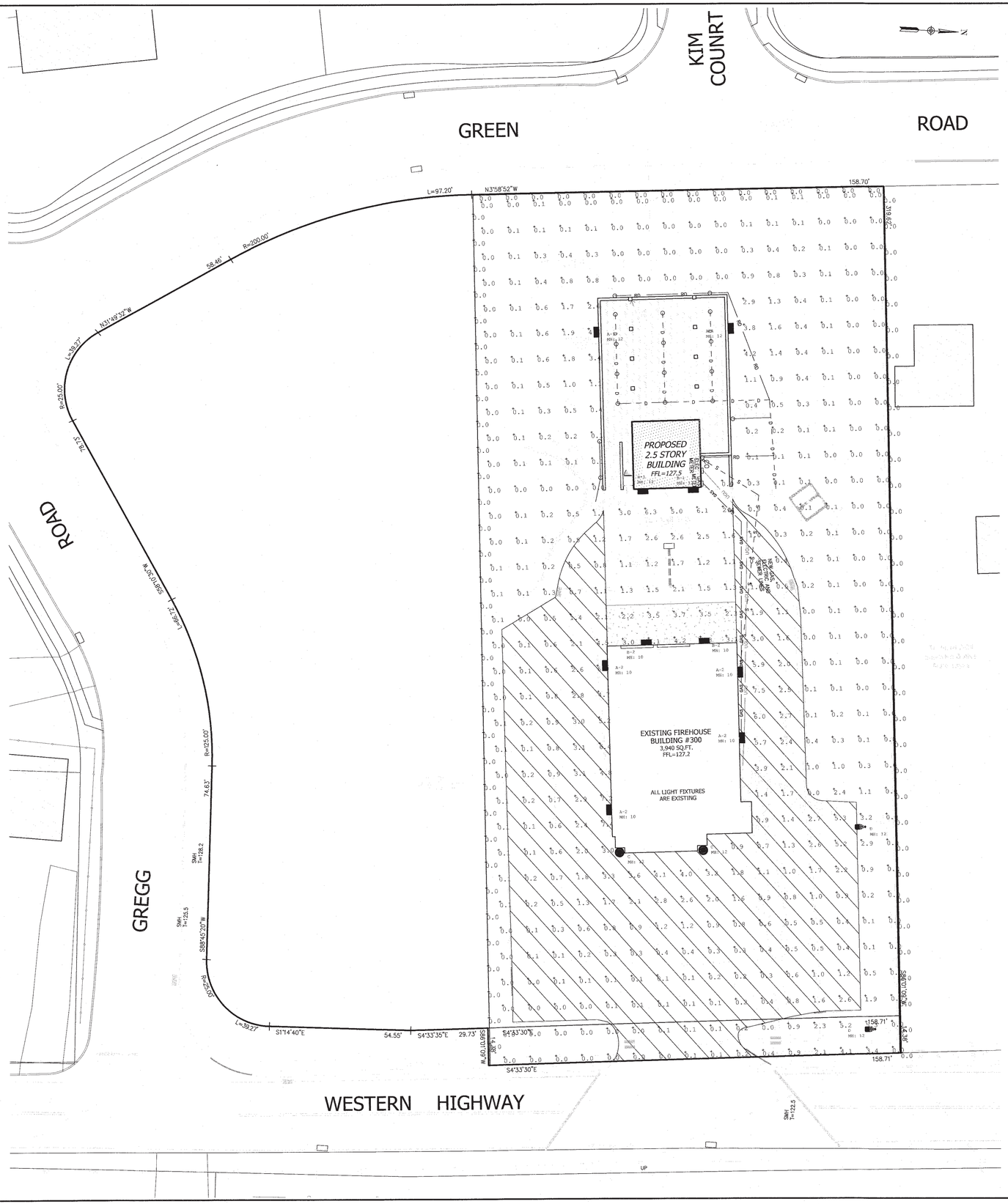

CALCULATION SUMMARY							
LABEL	CALC TYPE	UNITS	AVG	MAX	MIN	AVG/MIN	MAX/MIN
CALCULATION GRID @ GRADE	ILLUMINANCE	FC	0.91	7.5	0.0	N.A.	N.A.
PROPERTY LINE	ILLUMINANCE	FC	0.00	0.0	0.0	N.A.	N.A.
SITE	ILLUMINANCE	FC	1.78	7.5	0.0	N.A.	N.A.

LUMINAIRE SCHEDULE										
SYMBOL	QTY	LABEL	ARRANGEMENT	TOTAL LAMP LUM.	LLF	DESCRIPTION	TOTAL WATTS	BUG RATING	LUM. WATTS
	2	A-1	SINGLE	N.A.	0.950	VISIONAIRE MLB-1_T3_24LC_5_4K-VOLT @ 12' MTG. HT.	77.71428	B1-U0-G1	38.85714
	5	A-2	SINGLE	N.A.	0.950	VISIONAIRE MLB-1_T3_24LC_5_4K-VOLT @ 10' MTG. HT.	194.2857	B1-U0-G1	38.85714
	2	B-1	SINGLE	N.A.	0.950	VISIONAIRE MLB-1_T4_24LC_5_4K-COLT @ 12' MTG. HT.	77.71428	B1-U0-G1	38.85714
	2	B-2	SINGLE	N.A.	0.950	VISIONAIRE MLB-1_T4_24LC_5_4K-COLT @ 10' MTG. HT.	77.71428	B1-U0-G1	38.85714
	2	C	SINGLE	N.A.	0.950	VISIONAIRE SRL-1-T4-32LC-3-4K-UNV_CL @ 12' MTG. HT.	70	B1-U3-G2	35
	2	D	SINGLE	N.A.	0.950	VISIONAIRE VSX-II_T4L_20L_4K_HS-VOLT-SINGLE @ 12' MTG. HT.	268	B0-U3-G3	134

LEGEND

- 362 — EXISTING 2' CONTOUR
- 360 — EXISTING 10' CONTOUR
- W — EXISTING WATERLINE
- EXISTING FIRE HYDRANT
- G — EXISTING GAS LINE
- CB — EXISTING CATCH BASIN
- EXISTING STORM DRAIN LINE
- SMH — EXISTING SEWER MANHOLE
- S — EXISTING SEWER LINE
- × 366.0 — EXISTING SPOT ELEVATION
- EXISTING STONEWALL
- EXISTING SIGN
- LP — EXISTING LIGHT POLE
- UP — EXISTING UTILITY POLE
- LIMIT OF 100 YEAR FLOODPLAIN
- LIMIT OF 500 YEAR FLOODPLAIN
- GAS — GAS — PROPOSED GAS LINE

RYAN A. NASHER, P.E.
N.Y.S. P.E. LIC. NO. 89066

JOHN R. ATZL
N.Y.S. P.L.S. LIC. NO. 60228

REVISION	DATE	DESCRIPTION
1	07-15-22	PER COMMENTS BY ARCHITECT

ATZL, NASHER & ZIGLER P.C.
ENGINEERS-SURVEYORS-PLANNERS
232 North Main Street
New City, New York 10956
Tel: (845) 634-4694
Fax: (845) 634-5543
E-mail: info@anzny.com
Web: www.ANZNY.com

PROJECT:

TAPPAN FIRE DISTRICT

TOWN OF ORANGETOWN
ROCKLAND COUNTY, NEW YORK

TITLE:

LIGHTING PLAN

DRAWN BY: LF	CHECKED BY: JRA
DATE: OCTOBER 28, 2021	SCALE: 1 IN. = 20 FT.
PROJECT NO: 4924	DRAWING NO: 7