THIELLS ROSEVILLE FIRE DISTRICT

NEW 26-100 FIRE HEADQUARTERS

65 W RAMAPO ROAD
GARNERVILLE, NY 10923

TRFD 2302
FEBRUARY 2025

RENDERING

LOCATION MAP (N.T.S.)

TRUE NORTH

C:\Users\akaled\Documents\TRFD2302_Central25-A_AKaled.rvt

2/25/2025 4:05:41 PM

DRAWING LIST

INFORMATIONAL DRAWINGS (ALL CONTRACTS)

G 000	COVER SHEET
G 001	GENERAL NOTES AND LEGENDS
G 010	NEW YORK STATE CODE ANALYSIS
G 011	NEW YORK STATE CODE ANALYSIS

SOIL BORING DRAWINGS (ALL CONTRACTS)

BS 100	BORING LOCATION PLAN
BS 101	RECORD OF SUBSURFACE EXPLORATION (1 OF 2)
BS 102	RECORD OF SUBSURFACE EXPLORATION (2 OF 2)

CIVIL DRAWINGS (CONTRACT C)

V 100	EXISTING CONDITIONS PLAN
CD 100	DEMOLITION SITE PLAN
CD 101	TREE REMOVAL SITE PLAN
CS 100	DIMENSIONAL SITE PLAN
C 100	SITE GRADING AND DRAINAGE PLAN
C 110	DRAINAGE & UTILITY PLAN
C 111	DETAIL INFILTRATION BASIN PLAN
C 120	SOIL EROSION AND SEDIMENT CONTROL PLAN
C 130	SNOW REMOVAL PLAN
LS 100	LANDSCAPE SITE PLAN
C 500	SITE DETAILS (1 OF 4)
C 501	SITE DETAILS (2 OF 4)
C 502	SITE DETAILS (3 OF 4)
C 503	SITE DETAILS (4 OF 4)
C 504	LANDSCAPE DETAILS
C505	STRUCTURAL SITE DETAILS
DOT 100	NYSDOT HIGHWAY WORK PERMIT GENERAL PLAN
DOT 101	NYSDOT GRADING & DRAINAGE IMPROVEMENT PLAN
DOT 102	NYSDOT ROADWAY REMOVALS PLAN
DOT 200	TRAFFIC SIGNAL PLAN
DOT 201	TRAFFIC SIGNAL REMOVAL PLAN
DOT 202	SPREAD SPECTRUM WIRELESS CONTROL INSTALLATION PLAN

STRUCTURAL DRAWINGS (CONTRACT G)

S 001	GENERAL NOTES
S 002	GENERAL NOTES
S 100	FOUNDATION PLAN
S 110	SLAB PLAN
S 120	STORAGE MEZZANINE FRAMING PLAN
S 121	SECOND FLOOR FRAMING PLAN
S 130	LOW ROOF FRAMING PLAN
S 131	HIGH ROOF FRAMING PLAN
S 132	STAIR ROOF FRAMING PLANS
S 300	BRACED FRAME ELEVATIONS
S 301	BRACED FRAME ELEVATIONS
S 302	BRACED FRAME ELEVATIONS
S 400	WALL PROJECTION PLANS AND SECTIONS

STRUCTURAL DRAWINGS (CONTRACT G)

S 401	STAIR A PORTAL FRAME PLAN AND ISOMETRIC
S 500	FOUNDATION DETAILS
S 501	FOUNDATION DETAILS
S 510	SLAB DETAILS
S 520	MASONRY DETAILS
S 521	MASONRY DETAILS
S 530	STRUCTURAL STEEL DETAILS
S 531	STRUCTURAL STEEL DETAILS
S 532	STRUCTURAL STEEL/OPEN WEB STEEL JOIST DETAILS
S 533	STRUCTURAL STEEL DETAILS
S 534	METAL DECK DETAILS
S 535	METAL DECK BEARING DETAILS
S 540	COLD FORMED STEEL DETAILS
S 600	COLUMN AND REBAR DEVELOPMENT SCHEDULES
S 601	BASEPLATE SCHEDULE AND DETAILS
S 602	JOIST SCHEDULE AND LOADING DIAGRAM

ARCHITECTURAL DRAWINGS (CONTRACT G)

A 000	PARTITION TYPES
A 001	UL ASSEMBLIES
A 101	FLOOR PLAN - FIRST FLOOR
A 102	FLOOR PLAN - SECOND FLOOR
A 121	REFLECTED CEILING PLAN - FIRST FLOOR
A 122	REFLECTED CEILING PLAN - SECOND FLOOR
A 123	CEILING DETAILS
A 130	ROOF PLAN
A 131	ROOFING DETAILS
A 132	ROOFING DETAILS
A 200	BUILDING ELEVATIONS
A 201	BUILDING ELEVATIONS
A 300	BUILDING SECTIONS
A 301	BUILDING SECTIONS
A 310	WALL SECTION
A 311	WALL SECTION
A 312	WALL SECTION
A 400	ENLARGED STAIR 'A' PLAN AND SECTIONS
A 401	ENLARGED STAIR 'B' PLANS AND SECTIONS
A 402	ENLARGED STAIR 'C' PLANS AND SECTIONS
A 403	STAIR AND RAILING DETAILS
A 404	ENLARGED ELEVATOR PLAN, SECTION, DETAILS & NOTES
A 410	ENLARGED TOILET ROOMS, INTERIOR ELEVATIONS & TYPICAL DETAILS
A 411	ENLARGED TOILET ROOMS, INTERIOR ELEVATIONS & TYPICAL DETAILS
A 412	TYPICAL TOILET DETAILS AND NOTES
A 420	ENLARGED LAUNDRY ROOM & SCBA ROOM PLANS & INTERIOR ELEVATIONS
A 421	ENLARGED DECON TRANSITIONS & WORK ROOM PLANS & INTERIOR ELEVATIONS
A 422	ENLARGED OUTDOOR STORAGE & DAY ROOM PLANS, EQUIPMENT SCHEDULE & INTERIOR ELEVATIONS
A 423	ENLARGED FITNESS ROOM PLANS & INTERIOR ELEVATIONS
A 424	ENLARGED MULTI-PURPOSE ROOM SERVICE AREA & INTERIOR ELEVATIONS

ARCHITECTURAL DRAWINGS (CONTRACT G)

A 425	ENLARGED KITCHEN PLAN, INTERIOR ELEVATIONS & EQUIPMENT SCHEDULE
A 426	ENLARGED OPERABLE PARTITION PLAN, ELEVATIONS AND DETAILS
A 427	DISPLAY CASE INTERIOR ELEVATIONS
A 428	ENLARGED EXTERIOR PAVILION PLAN AND ELEVATIONS
A 500	PLAN DETAILS
A 501	SECTION DETAILS
A 502	INTERIOR DETAILS
A 503	MILLWORK DETAILS
A 504	MILLWORK DETAILS
A 600	FINISH SCHEDULE
A 601	BUILDING SIGNAGE DETAILS
A 610	WINDOW TYPES & DETAILS
A 620	DOOR SCHEDULE & DOOR TYPES
A 621	DOOR DETAILS
A 622	DOOR DETAILS
A 623	DOOR DETAILS
A 630	CURTAIN WALL TYPES
A 631	CURTAIN WALL TYPES & DETAILS
A 640	STOREFRONT TYPES
A 641	STOREFRONT DETAILS

PLUMBING DRAWINGS (CONTRACT P)

P 001	PLUMBING NOTES, LEGEND, ABBREVIATIONS AND SCHEDULES
PS 100	PLUMBING SITE PLAN
PS 101	ENLARGED FUELING STATION PLAN AND DETAILS
PS 102	ENGLARGED OIL WATER SEPARATOR PLAN AND DETAILS
P 120	DOMESTIC WATER, GAS, AND COMPRESSED AIR FIRST FLOOR PLAN
P 121	DOMESTIC WATER, GAS, AND COMPRESSED AIR SECOND FLOOR PLAN
P 130	WASTE, VENT, AND STORM UNDERSLAB PLAN
P 131	WASTE, VENT, AND STORM FIRST FLOOR PLAN
P 132	WASTE, VENT, AND STORM SECOND FLOOR PLAN
P 140	PLUMBING ROOF PLAN
P 400	PLUMBING ENLARGEMENT PLANS (1 OF 2)
P 401	PLUMBING ENLARGEMENT PLANS (2 OF 2)
P 500	PLUMBING DETAILS (1 OF 2)
P 501	PLUMBING DETAILS (2 OF 2)
P 502	GAS BOOSTER PUMP DETAILS
P 600	PLUMBING SCHEDULES (1 OF 2)
P 601	PLUMBING SCHEDULES (2 OF 2)
P 610	DOMESTIC RISER DIAGRAM
P 611	SANITARY, VENT, AND STORM RISER DIAGRAMS (1 OF 2)
P 612	SANITARY, VENT, AND STORM RISER DIAGRAMS (2 OF 2)
P 613	GAS RISER DIAGRAM

FIRE SPRINKLER DRAWINGS (CONTRACT P)

FP 001	FIRE PROTECTION GENERAL NOTES, ABBREVIATIONS, AND LEGENDS
FP 500	SPRINKLER DETAILS
FP 100	FIRE PROTECTION FIRST FLOOR PLAN
FP 110	FIRE PROTECTION SECOND FLOOR PLAN

MECHANICAL DRAWINGS (CONTRACT M)

M 001	HVAC GENERAL NOTE AND LEGENDS
M 110	HVAC FIRST FLOOR PLAN
M 111	HVAC SECOND FLOOR PLAN
M 131	HVAC ROOF PLAN
M 500	DETAILS (1 OF 2)
M 501	DETAILS (2 OF 2)
M 600	SCHEDULES
M 601	SCHEDULES
M 602	SCHEDULES
M 603	SCHEDULES
M 604	KITCHEN SCHEDULES
M 605	KITCHEN SCHEDULES

ELECTRICAL DRAWINGS (CONTRACT E)

E 502	DETAILS - SHEET NO. 3
E 001	ELECTRICAL LEGENDS
ES 100	ELECTRICAL SITE PLAN
E 100	ELECTRICAL POWER FIRST FLOOR FLOOR PLAN
E 101	ELECTRICAL POWER SECOND FLOOR FLOOR PLAN
E 110	ELECTRICAL HVAC POWER FIRST FLOOR PLAN
E 111	ELECTRICAL HVAC POWER SECOND FLOOR PLAN
E 112	ELECTRICAL HVAC POWER ROOF PLAN
E 120	ELECTRICAL LIGHTING FIRST FLOOR PLAN
E 121	ELECTRICAL LIGHTING SECOND FLOOR PLAN
E 130	ELECTRICAL LOW VOLTAGE FIRST FLOOR PLAN
E 131	ELECTRICAL LOW VOLTAGE SECOND FLOOR PLAN
E 140	ELECTRICAL GENERATOR PLAN
E 200	ELECTRICAL EQUIPMENT ELEVATIONS
E 500	ELECTRICAL DETAILS - SHEET NO. 1
E 501	ELECTRICAL DETAILS - SHEET NO. 2
E 540	ELECTRICAL GENERATOR DETAILS
E 600	ELECTRICAL SCHEDULES
E 601	SCHEDULES
E 610	ELECTRICAL SINGLE LINE DIAGRAM
E 611	FUEL STATION SINGLE LINE DIAGRAM
E 620	ELECTRICAL PANEL SCHEDULES
E 621	ELECTRICAL PANEL SCHEDULES

FIRE ALARM DRAWINGS (CONTRACT E)

FA 001	FIRE ALARM LEGENDS AND RISER DIAGRAMS
FA 100	FIRE ALARM FIRST FLOOR PLAN
FA 101	FIRE ALARM SECOND FLOOR PLAN
FA 102	ROOF FIRE ALARM PLAN

H2M architects + engineers

538 Broad Hollow Road, 4th Floor East
Melville, NY 11747
631.756.8000 • www.h2m.com
Architecture & Landscape Architecture: No Certificate Required
Engineering Certificate of Authorization No.: 0018178

REGISTERED ARCHITECT PATRICK OTTO STONE 039654 STATE OF NEW YORK

10/31/2025
Exp. Date

PATRICK O. STONE, R.A.
NY PROFESSIONAL ARCHITECT Lic. No. 039654

"IN ACCORDANCE WITH ARTICLE 145, SECTION 7209 OF THE NEW YORK STATE EDUCATION LAW, ALTERATIONS OF THIS DOCUMENT EXCEPT BY A LICENSED PROFESSIONAL IS ILLEGAL."

DESIGNED BY:	DRAWN BY:	CHECKED BY:	REVIEWED BY:
DBS/RLG	ANK		
PROJECT No: TRFD 2302	DATE: FEBRUARY 2025		SCALE: AS SHOWN

CLIENT

THIELLS ROSEVILLE FIRE DISTRICT

NEW 26-100 FIRE HEADQUARTERS

65 W RAMAPO ROAD
GARNERVILLE, NY 10923

STATUS

FINAL BID DOCUMENT

DRAWING No.

G 000.00

GENERAL NOTES

1. THE DRAWINGS AND PROJECT MANUAL ARE COMPLEMENTARY. THE PROJECT MANUAL SEPARATELY BOUND CONTAINS THE CONDITIONS OF THE CONTRACT, PROCEDURES AND TECHNICAL SPECIFICATIONS.

2. THE CONSTRUCTION DOCUMENTS DEFINE THE EXTENT, QUALITY OF PRODUCTS AND THE SCOPE OF WORK. THE CONSTRUCTION DOCUMENTS ALSO PROVIDE A GUIDE FOR THE COORDINATION OF WORK.

3. THE CONTRACTOR MUST REVIEW ALL DRAWINGS CONTAINED WITHIN THIS SET AND ALL PROJECT SPECIFICATIONS SO AS TO BECOME FAMILIAR WITH ALL OF THE WORK REQUIRED UNDER THE CONTRACTS. THE CONTRACTOR SHALL BE REQUIRED TO FURTHER COORDINATE ALL OF THE WORK AND SHALL PROVIDE A FIRST CLASS FINISHED INSTALLATION THAT SHALL FOLLOW ALL INDUSTRY BEST PRACTICES AND STANDARDS, CODES AND CODE REFERENCE STANDARDS, AND PRODUCT MANUFACTURER'S REQUIREMENTS.

4. THE ARCHITECT/ENGINEER OF RECORD SHALL PROVIDE ALL INTERPRETATIONS OF THE CONTRACT DOCUMENTS INCLUDING THE INTENT.

5. THE CONTRACTOR SHALL NOT MAKE ANY DEVIATIONS FROM THE CONTRACT DOCUMENTS WITHOUT WRITTEN DIRECTION FROM ARCHITECT/ENGINEER OF RECORD.

6. VERIFY AND ADJUST APPROXIMATE DIMENSIONS (+/-) IN THE FIELD. VERIFY WITH THE ARCHITECT/ENGINEER OF RECORD PRIOR TO CONSTRUCTION AND UPDATE PROJECT RECORD SET ACCORDINGLY.

7. DO NOT SCALE DRAWINGS. WRITTEN DIMENSIONS CONFIRMED BY FIELD CONDITIONS TAKE PRECEDENCE. IF A DISCREPANCY ARISES BASED UPON FIELD CONDITIONS, CONSULT WITH ARCHITECT/ENGINEER OF RECORD BEFORE PROCEEDING WITH WORK OR ORDERING OF MATERIALS.

8. THE CONTRACTOR SHALL BE EXPERIENCED IN SIMILAR TYPES OF CONSTRUCTION PROJECTS. ALL SUBCONTRACTORS HIRED SHALL ALSO BE EXPERIENCED WITH THE TYPE OF CONSTRUCTION REQUIRED. ALL WORK SHALL BE PERFORMED BY TRADES THAT ARE EXPERIENCED WITH THE WORK TO BE UNDERTAKEN THAT ARE FAMILIAR WITH THE ITEMS TO BE INSTALLED, INDUSTRY BEST PRACTICES AND STANDARDS, CODES AND CODE REFERENCED STANDARDS, AUTHORITY HAVING JURISDICTION (AHJ) REQUIREMENTS, AND PRODUCT MANUFACTURER'S INSTALLATION REQUIREMENTS.

9. ALL ELECTRICAL WORK SHALL BE PERFORMED BY LICENSED ELECTRICIANS ACCEPTABLE TO THE AHJ.

10. ALL PLUMBING WORK SHALL BE PERFORMED BY LICENSED PLUMBERS ACCEPTABLE TO THE AHJ.

11. CONTRACTORS SHALL BE REQUIRED TO PROVIDE ANY AND ALL WORK INCIDENTAL TO THE CONSTRUCTION AS REQUIRED TO ACHIEVE A FIRST CLASS FINISHED INSTALLATION AND TO FOLLOW ALL INDUSTRY BEST PRACTICES AND STANDARDS, PERTINENT CODES AND CODE REFERENCE STANDARDS, AND PRODUCT MANUFACTURER'S REQUIREMENTS AS PART OF THE BASE BID PRICE, WITHOUT ANY EXCEPTIONS.

12. THE CONTRACTOR SHALL PREPARE COORDINATION DRAWINGS OF EACH TRADE THAT IS INVOLVED IN THE CONSTRUCTION, INCORPORATING ALL OF THE WORK TO IDENTIFY ANY POTENTIAL CONFLICTS OR ISSUES PRIOR TO UNDERTAKING THE WORK. THE CONTRACTOR SHALL PROVIDE THE COORDINATION DRAWINGS TO THE ARCHITECT/ENGINEER OF RECORD FOR REVIEW.

13. CONTRACTORS SHALL REPORT ANY ERRORS, INACCURACIES, MISSING DIMENSIONAL REQUIREMENTS OR CONFLICTS WITHIN THE CONTRACT DOCUMENTS. IF THERE IS A DISCREPANCY WITHIN THE CONTRACT DOCUMENTS THE ARCHITECT/ENGINEER OF RECORD SHALL BE NOTIFIED IMMEDIATELY SO THAT THE DISCREPANCY CAN BE RESOLVED. THE MORE CONSERVATIVE INTERPRETATION RESULTING IN THE GREATEST EXTENT OF WORK SHALL BE ASSUMED AS THE INTENT WITHIN REGARD TO THE CONTRACTORS BID.

14. THE CONTRACTORS SHALL VERIFY EXACT LAYOUT CAPABILITY WITH ALL EXISTING CONDITIONS AND COORDINATE ALL OF THE WORK TO BE UNDERTAKEN PRIOR TO BEGINNING ANY WORK. NOTIFY THE ARCHITECT/ENGINEER OF RECORD IN WRITING BEFORE BEGINNING ANY WORK IF ANY DISCREPANCIES OR CONFLICTS ARE FOUND WITH THE WORK IN THE CONTRACT DOCUMENTS AND/OR CONDITIONS ENCOUNTERED. CONTRACTORS WILL ASSUME ALL RESPONSIBILITY AND LIABILITY FOR ANY WORK EXECUTED WITHOUT PRIOR VERIFICATION AND/OR COORDINATION INCLUDING BUT NOT LIMITED TO RESPONSIBILITY AND LIABILITY FOR ALL TEMPORARY MEASURES, TIME LOST, CHANGES TO THE WORK SCOPE, ANY REMOVALS AND REINSTALLATION'S WITHOUT ANY ADDITIONAL COMPENSATION.

15. THE CONTRACTORS BY COMMENCING WORK ARE AGREEING THAT THEY ARE EXPERIENCED WITH THE WORK TO BE UNDERTAKEN AND THAT THEY ARE FAMILIAR AND EXPERIENCED WITH THE ITEMS TO BE INSTALLED, INDUSTRY BEST PRACTICES AND STANDARDS, PERTINENT CODES AND REFERENCED STANDARDS, AND PRODUCT MANUFACTURER'S INSTALLATION REQUIREMENTS, THAT THEY HAVE THOROUGHLY REVIEWED AND COORDINATED ALL OF THE WORK REQUIRED AND THAT THEY HAVE VERIFIED THE EXISTING CONDITIONS AND THAT THE WORK CAN BE EXECUTED AND INSTALLED WITHOUT CONFLICT.

16. ALL WORK SHALL BE PERFORMED IN ACCORDANCE WITH ALL LOCAL, STATE, AND FEDERAL LAWS, CODES, RULES AND REGULATIONS OF EVERY AGENCY, DEPARTMENT AND/OR AUTHORITY HAVING JURISDICTION. THE BUILDING CODE FOR THIS PROJECT IS THE 2020 BCNYS AND ALL REFERENCED CODES AND STANDARDS. ICC A117.-2009 IS THE ACCESSIBILITY STANDARD TO BE FOLLOWED.

17. THE CONTRACTOR SHALL NOTIFY THE ARCHITECT/ENGINEER OF RECORD IMMEDIATELY IF HE OR SHE CANNOT COMPLY WITH ALL THE REQUIREMENTS OF THE CONSTRUCTION DOCUMENTS, 2020 BCNYS, ADA, OR ANY OF THE ASSOCIATED AGENCIES HAVING JURISDICTION.

18. THE ARCHITECT/ENGINEER OF RECORD WILL FILE THE APPLICATIONS FOR A CONSTRUCTION PERMIT WITH THE TOWN OF HAVERSTRAW BUILDING DEPARTMENT. THE CONTRACTORS SHALL FILE ALL OTHER APPLICATIONS, SECURE ALL OTHER REQUIRED APPROVALS, OBTAIN ALL REQUIRED PERMITS, PAY ASSOCIATED FEES AND OBTAIN ALL SIGN OFFS AND TEMPORARY AND FINAL CERTIFICATES FROM ALL APPROPRIATE AGENCIES HAVING JURISDICTION.

19. NO WORK SHALL COMMENCE UNTIL ALL APPROPRIATE APPROVALS AND PERMITS HAVE BEEN SECURED BY THE CONTRACTORS.

20. THE CONTRACTORS ARE REQUIRED TO PROVIDE ALL MEANS AND METHODS ASSOCIATED WITH THE WORK TO BE UNDERTAKEN INCLUDING ALL PROJECT RELATED SITE SAFETY.

21. THE CONTRACTORS SHALL BE RESPONSIBLE FOR ADEQUATELY BRACING AND PROTECTING ALL WORK DURING CONSTRUCTION AND OR DEMOLITION AGAINST DAMAGE, BREAKAGE, COLLAPSE, DISTORTION AND MISALIGNMENT.

22. THE CONTRACT DOCUMENTS DO NOT INCLUDE ALL THE NECESSARY COMPONENTS FOR CONSTRUCTION SAFETY OR PROTECTION, SAFETY AND CARE OF EXISTING AND ADJACENT PROPERTIES AND STRUCTURES DURING CONSTRUCTION. COMPLIANCE WITH TOWN, COUNTY, STATE, AND FEDERAL REGULATIONS REGARDING PROTECTION AND SAFETY IS THE RESPONSIBILITY OF THE CONTRACTOR.

23. CONTRACTORS SHALL HIRE THEIR OWN PROFESSIONAL ENGINEER LICENSED IN THE STATE OF NEW YORK TO DESIGN AND ENGINEER ALL REQUIRED CONTRACTOR RELATED WORK FOR PROTECTION, BRACING, RIGGING, SAFETY AND CONSTRUCTION ITEMS.

24. CONTRACTORS SHALL BE RESPONSIBLE TO PROTECT THE PUBLIC, WORKERS, NEIGHBORING PROPERTIES AND INSTALLED WORK THROUGHOUT THE DURATION OF THE PROJECT.

25. THE CONTRACTOR SHALL MAINTAIN, AT THE SITE ONE RECORD COPY OF ALL DRAWINGS, SPECIFICATIONS, APPROVED SHOP DRAWINGS, SUBMITTALS AND SAMPLES. CONTRACTORS SHALL MAINTAIN A RECORD OF ANY CHANGES MADE AND LOCATIONS OF CONCEALED OR BUILT IN WORK AS THE CONSTRUCTION PROGRESSES. THE FIELD MARK UP INFORMATION SHALL BE INCORPORATED INTO AS-BUILT RECORD DOCUMENTS PREPARED BY THE CONTRACTORS AND TURNED OVER TO THE ARCHITECT/ENGINEER OF RECORD AS PART OF PROJECT CLOSEOUT.

26. FIRST FLOOR DATUM ELEVATION 400.00'. ALL VERTICAL DIMENSIONS FOR THE FLOOR PLANS ARE WORKED FROM THIS DATUM, UNLESS NOTED OTHERWISE.

27. THE CONTRACTORS SHALL PERFORM WORK EXPEDITIOUSLY, PROFESSIONALLY AND IN PROPER SEQUENCE.

28. THE CONTRACTORS SHALL PROVIDE A DETAILED CONSTRUCTION SCHEDULE INCLUDING PHASING FOR APPROVAL BY THE ARCHITECT/ENGINEER OF RECORD PRIOR TO COMMENCEMENT OF WORK.

29. IF COORDINATION, PREPARATIONS OR CONDITIONS FOR WORK ARE INADEQUATE OR NOT SUITABLE IN ANY WAY, CONTRACTORS ARE NOT TO PROCEED WITH WORK UNTIL ALL COORDINATION, PREPARATIONS AND CONDITIONS ARE CORRECTED AND ACCEPTABLE FOR NEW WORK TO BE INSTALLED.

30. ANY WORK INSTALLED THAT IS LESS THAN A COMPLETE AND FIRST CLASS INSTALLATION SHALL BE REMOVED AS DIRECTED AND REINSTALLED AT NO ADDITIONAL COST TO THE OWNER OR ARCHITECT/ENGINEER.

31. THE OWNER RESERVES THE RIGHT, THROUGHOUT THE PROJECT DURATION, TO DELIVER, PLACE AND INSTALL MATERIALS, EQUIPMENT AND FURNISHINGS AS THE WORK PROGRESSES PROVIDING THERE IS NOT A CONFLICT WITH THE CONTRACTORS WORK.

32. THE CONTRACTORS SHALL BE RESPONSIBLE FOR THE CONTROL OF CHEMICAL FUMES, GASES AND OTHER CONTAMINANTS PRODUCED BY CONSTRUCTION OPERATIONS THROUGHOUT THE PROJECT DURATION INCLUDING BUT NOT LIMITED TO; WELDING, GASOLINE, OR DIESEL ENGINES, PAINTING, ETC. TO ENSURE THEY DO NOT ENTER OCCUPIED PORTIONS OF THE FACILITY INCLUDING FACILITY OPENINGS AND INTAKES OR NEIGHBORING PROPERTIES.

33. THE CONTRACTOR SHALL BE RESPONSIBLE TO ENSURE THAT CONSTRUCTION ACTIVITIES AND MATERIALS THAT RESULT IN OFF-GASSING OF VOLATILE ORGANIC COMPOUNDS (VOC) SUCH AS GLUES, PAINTS, ETC. ARE SCHEDULED, CURED AND VENTILATED ADEQUATELY BEFORE A SPACE IS OCCUPIED.

34. CONSTRUCTION OPERATIONS SHALL NOT PRODUCE NOISE IN EXCESS OF 60 dBA. IF NOT POSSIBLE, THE CONTRACTOR SHALL MITIGATE ACTIVITIES BY MEANS ACCEPTABLE TO THE ARCHITECT/ENGINEER.

35. ALL CONSTRUCTION MATERIALS AND EQUIPMENT SHALL BE UTILIZED AND STORED IN A SAFE AND SECURE MANNER. FENCES AROUND CONSTRUCTION, MATERIALS, EQUIPMENT, SUPPLIES AND DEBRIS SHALL BE PROVIDED. REFER TO DIVISION 01 SPECIFICATIONS FOR CONTRACTOR RESPONSIBILITIES

ABBREVIATIONS

AB	ANCHOR BOLT
ABV	ABOVE
A/C	AIR CONDITIONER
ACI	AMERICAN CONCRETE INSTITUTE
ACST	ACOUSTIC
ACP	ACOUSTICAL CEILING PANEL
ACU	AIR CONDITIONER UNIT
AD	ACCESS DOOR
ADAPT	ADAPTATION
ADH	ADHESIVE
ADJ	ADJUSTABLE
ADMIN	ADMINISTRATION
A.D.O	AUTOMATIC DOOR OPERATOR
A/E	ARCHITECT/ENGINEER
A.F.F	ABOVE FINISH FLOOR
ALT	ALTERNATE
ALUM	ALUMINUM
ANCH	ANCHOR
ANSI	AMERICAN NATIONAL STANDARDS INSTITUTE
A.P.	ACCESS PANEL
APPROX	APPROXIMATE
ASPH.	ASPHALT
ASPPLK	ASPHALT PLANK
ASSIST	ASSISTANT
ASTM	AMERICAN SOCIETY FOR TESTING & MATERIALS
A.T.	ACOUSTICAL TILE
AWS	AMERICAN WELDING SOCIETY
BAL.	BALANCE
B.B.	BULLETIN BOARD
B.C.	BRICK COURSE
BRD.	BOARD
BLDG	BUILDING
BLK.	BLOCK
BLKG.	BLOCKING
BM.	BEAM
B.O.	BOTTOM OF
B.O.L.	BOTTOM OF LINTEL
BOT.	BOTTOM
B.R.	BUMPER RAIL
BRKT.	BRACKET
BU	BUILT-UP
CAB.	CABINET
C.B.	CATCH BASIN
C.C.	CONSTRUCTION CONTRACTOR
CLG.	CEILING
CEM.	CEMENT
CER.	CERAMIC
C.FI.	CONDUCTIVE FLOORING
CG	CORNER GUARD
CIP	CAST-IN-PLACE
C.J.	CONTROL JOINT
CLG.	CEILING
CL.GL.	CLEAR GLASS
CLO.	CLOSER
CMU	CONCRETE MASONRY UNIT
C.O.	CLEAN OUT
COL.	COLUMN
CONC.	CONCRETE
CONST.	CONSTRUCTION
CONT.	CONTINUOUS
CONTR.	CONTRACTOR
CORR.	CORRIDOR
CPT.	CARPET
C.R.	CARD READER
C.R.S	CORROSION-RESISTANT STEEL
CRSI	CONCRETE REINFORCED STEEL INSTITUTE
C/S	COUNTERSUNK
C.T.	CERAMIC TILE
CTG.	COATING
CTR.	CENTER
CU.	COPPER
C.W.	COLD WATER
DBL.	DOUBLE
DET.	DETAIL
D.F.	DRINKING FOUNTAIN
DIA.	DIAMETER
DIAG.	DIAGONAL
DIM.	DIMENSION
DISP.	DISPENSER
DN.	DOWN
DRSG.	DRESSING
D.S.	DOWNSPOUT
DRWG.	DRAWING
DWR.	DRAWER
E.	ELECTRICAL
EA	EACH
E.J.	EXPANSION JOINT
EL.	ELEVATION
ELEC.	ELECTRIC/ELECTRICAL

ELEV.	ELEVATION
ENG	ENGINEER
EP	ELECTRICAL PANEL
EPY	EPOXY COATING
EQ	EQUAL
EQUIP.	EQUIPMENT
E.S.	EACH SIDE
EXAM	EXAMINATION
EXIST.	EXISTING
EXH.	EXHAUST
EXP	EXPOSED
EXPN.	EXPANSION
EXT.	EXTERIOR
F.A.I.	FRESH AIR INTAKE
F.C.	FIRE CODE
F.B.O.	FURNISHED BY OTHERS
F.C.	FILING CABINET
F.C.U.	FAN COIL UNIT
F.D.	FLOOR DRAIN
FE.	FIRE EXTINGUISHER
F.F.	FINISH FLOOR
F.H.C.	FIRE HOUSE CABINET
FHMS	FLAT HEAD MACHINE SCREW
FIN.	FINISH
FLAM	FLAMMABLE
FLR.	FLOOR
FLSHG.	FLASH
FDN.	FOUNDATION
F.P.	FIRE PARTITION
F.R.	FIRE RETARDANT
F.SP.	FIRE STANDPIPE
FTG.	FOOTING
F.GL.	FIXED GLASS
FUR'G	FURRING
G.	GAS
GA.	GAUGE
GALV.	GALVANIZED
G.B.	GRAB BAR
GEN.	GENERAL
GL.	GLASS, GLAZED
GR.	GRADE
GRT.	GROUT
G.W.B.	GYPSUM WALL BOARD
GYP.	GYPSUM
GYP.BD.	GYPSUM BOARD
H.C.	HANDICAPPED
HDBD.	HARDBOARD
HDWD.	HARDWOOD
HDWE.	HARDWARE
HM.	HOLLOW METAL
HOR.	HORIZONTAL
H.R.	HANDRAIL
HT.	HEIGHT
HTG	HEATING
H.W.	HOT WATER
INSUL.	INSULATION/INSULATING
INT.	INTERIOR
JNT.	JOINT
JST.	JOIST
K.P.	KICK PLATE
LAM.	LAMINATE
LAV.	LAVATORY
LDR.	LEADER
LKR.	LOCKER
L.L.H.	LONG LEG HORIZONTAL
L.L.V.	LONG LEG VERTICAL
LOC.	LOCATION
L.P.	LOW POINT
LMSTN.	LIMESTONE
LT.	LIGHT
M.	MECHANICAL
MANUF.	MANUFACTURER
MATL.	MATERIAL
MAX.	MAXIMUM
M.B.	MODIFIED BITUMEN
MECH.	MECHANICAL
M.E.P.	MECHANICAL, ELECTRICAL, PLUMBING
MET.	METAL
MFD.	MANUFACTURED
MFR.	MANUFACTURER
MGR.	MANAGER
MID.	MIDDLE
MIN.	MINIMUM
MISC.	MISCELLANEOUS
MLDG.	MOLDING
MTD.	MOUNTED
M.O.	MASONRY OPENING
MOIST.	MOISTURE
M.P.E.	MECHANICAL, PLUMBING, ELECTRICAL
M.R.	MOISTURE RESISTANT

M.T.	METAL THRESHOLD
MTL.	METAL
M.T.P.	METAL TOILET PARTITION
MULT.	MULTIPLE
NBS	NATIONAL BUREAU OF STANDARDS
N.I.C.	NOT IN CONTRACT
N.L.	NEOPRENE LATEX
NO.	NUMBER
NRCA	NATIONAL ROOFING CONTRACTORS ASSOC.
N.T.S.	NOT TO SCALE
O.C.	ON CENTER
O.D.	OUTSIDE DIAMETER
OHD.	OVERHEAD DOOR
OPG.	OPENING
OPP.	OPPOSITE
O.W.	OBSERVATION WINDOW
O.W.S.J.	OPEN WEB STEEL JOIST
P.	PLUMBING
PAR.	PARALLEL
P.C.	POURED CONCRETE
PERP.	PERPENDICULAR
PL.	PLATE OR PLASTIC
PLAS.	PLASTIC
P.LAM.	PLASTIC LAMINATED
PLBG.	PLUMBING
PLYWD.	PLYWOOD
PNL.	PANEL
PNT.	PAINTED
PORT.	PORTABLE
PROJ.	PROJECTION
P.S.	PRODUCT STANDARD
PSF	POUNDS PER SQUARE FOOT
PSI	POUNDS PER SQUARE INCH
PT.	PAINT
PTD.	PAINTED
PTN.	PARTITION
P.V.C.	POLYVINYL CHLORIDE
P.W.	PASS WINDOW
QA	QUALITY ASSURANCE
Q.T.	QUARRY TILE
R	RADIUS OR RISER
(R)	RELOCATED ITEM
RBR.	RUBBER BASE
R&C	RECEPTION & CONTROL
R.C.P.	REFLECTED CEILING PLAN
R.D.	ROOF DRAIN
R.D.L.	ROOF DRAIN LEADER
REC.	RECEPTION
REINF.	REINFORCED
REF.	REFRIGERATION
REG.	REGLET
REHAB.	REHABILITATION
REPRO.	REPRODUCTION
REQ.	REQUIREMENT
RESIL.	RESILIENT
RM.	ROOM
R.O.	ROUGH OPENING
R.P.	RETRACTABLE PARTITION
RST.	RESISTANCE
R.T.	RUBBER TILE
S.C.	SPECIAL COATING
SCHED.	SCHEDULE
SECT.	SECTION
S.G.F.U.	STRUCTURAL GLAZED FACING UNITS
SH.	SHELVING, SHELF
SIM.	SIMILAR
S.J.C.	SEISMIC JOINT CEILING
S.J.F.	SEISMIC JOINT FLOORING
S.J.W.	SEISMIC JOINT WALL
SPEC.	SPECIFICATIONS
SQ.	SQUARE
S&R	SHELF & ROD
S.S.	SERVICE SINK
ST. STL.	STAINLESS STEEL
STA.	STATION
STL.	STEEL
STOR.	STORAGE
STRUC.	STRUCTURE
STRUCT.	STRUCTURAL
SUB.	SUBCONTRACTOR
SUPER.	SUPERVISOR
SUSP.	SUSPEND
S.V.F.	SHEET VINYL FLOORING
SW.	SIDEWALK
SYM.	SYMMETRICAL
T.	TOILET
TECH.	TECHNICIAN
TEL.	TELEPHONE
T.GL.	TEMPERED
TEMP.	TEMPERATURE

TEMP'Y	TEMPORARY
TERR.	TERRAZZO
THK.	THICK
T.O.M.	TOP OF MASONRY
T.O.S.	TOP OF STEEL
TOX.	TOXIC
TR.	TREAD
TRTD.	TREATED
TRTMT.	TREATMENT
TV.C.TV	SCREEN OR MONITOR, CEILING MOUNTED
TV.W.TV	SCREEN OR MONITOR, WALL MOUNTED
TYP.	TYPICAL
UBC	UNIFORM BUILDING CODE
UNAS.	UNASSIGNED
U.N.O.	UNLESS NOTED OTHERWISE
UNPT.	UNPAINTED
U.P.S	UNINTERRUPTABLE POWER SUPPLY
UR.	URINAL
UTIL.	UTILITY
V.	VACUUM
V.B.	VAPOR BARRIER
VCT	VINYL COMPOSITION TILE
VERT.	VERTICAL
VEST.	VESTIBULE
V.H.	VINYL HOMOGENEOUS
VIN.	VINYL
V.T.R.	VENT THRU ROOF
V.W.C.	VINYL WALL COVERING
W.	WALL COVERING
W/	WILL
W.C.	WATER CLOSET
W/C	WHEEL CHAIR
WD.	WIDTH OR WOOD
W.HTR.	WATER HEATER
W.I	WROUGHT IRON
W.W.F.	WELDED WIRE FABRIC
W/O	WITHOUT
W.P.	WATERPROOFING
W.R.	WASTE REPLACEMENT
W.R.A.B.	WATER RESISTANT AIR BARRIER
WSCT.	WAINSCOT
W.T.	WALL TILE
W.V.F.	WELDED VINYL FLOORING

SYMBOL LEGEND

- OFFICE 10001A 150 SF — Room Designation
- A — Window, Curtain Wall and Storefront Key
- 1001A — Door Number
- 12'-0" — Primary Ceiling Tag
- 1 / A101 — Exterior Elevation
- 1 / A101 — Section Cut
- Brick
- Acoustic Tile / Ceramic Tile
- Concrete
- Concrete Block
- Earth
- Steel
- Casework
- 1i — Wall Type
- 0 — Column Grid
- XX — Revision Tag
- 1 Title SCALE: 1/8" = 1'-0" — Drawing Title
- 1'-0" A.F.F. — Secondary Ceiling Tag
- A / A101 — Interior Elevation
- 1 / A101 Ref — Detail Key
- Batt Insulation
- Rigid Insulation
- Gypsum Board
- Plywood
- Wood Blocking
- Wood

ALTERNATES

CONTRACT 'G'

G-01 FOUR-FOLD DOORS
CONTRACT 'G' TO PROVIDE FOUR-FOLD STYLE DOOR IN LIEU OF FULLY GLAZED SECTIONAL OVERHEAD DOORS AT OH-1, OH-2, OH-3, OH-4 & OH-5 (TYPICAL OF 5 LOCATIONS). REFER TO FOUR-FOLD SPECIFICATION FOR ADDITIONAL INFORMATION.
NOTE: THIS ALTERNATE IS ASSOCIATED WITH AND WILL BE AWARDED WITH ALTERNATE P-03.

BASE BID: PROVIDE FULLY GLAZED SECTIONAL OVERHEAD DOORS AT OVERHEAD DOORS OH-1, OH-2, OH-3, OH-4 & OH-5 (TYPICAL OF 5 LOCATIONS).

G-02 MULTI-PURPOSE ROOM CEILING
CONTRACT 'G' TO PROVIDE ACP-2 IN LIEU OF BASE BID LINEAR METAL CEILINGS IN MULTI-PURPOSE ROOM 203A AND 203B.

G-03 SERVICE AREA EQUIPMENT (MULTI-PURPOSE ROOM)
CONTRACT 'G' TO PROVIDE ALL EQUIPMENT LISTED FOR MULTI-PURPOSE ROOM 203 LISTED AS 'N.I.C'. EQUIPMENT LABELED AS 'EXISTING' SHALL NOT BE INCLUDED IN PRICE TO FURNISH EQUIPMENT. BASE BID PRICE SHALL INCLUDE INSTALLATION OF ALL EQUIPMENT FURNISHED BY OWNER.

G-04 KITCHEN EQUIPMENT
CONTRACT 'G' TO PROVIDE ALL EQUIPMENT LISTED FOR KITCHEN 201 LISTED AS 'N.I.C'. EQUIPMENT LABELED AS 'EXISTING' SHALL NOT BE INCLUDED IN PRICE TO FURNISH EQUIPMENT. BASE BID PRICE SHALL INCLUDE INSTALLATION OF ALL EQUIPMENT FURNISHED BY OWNER.

G-05 ILLUMINATED EXTERIOR SIGNAGE
CONTRACT 'G' TO PROVIDE HALO LIT LETTERING SIGNAGE IN LIEU OF NON-ILLUMINATED BUILDING MOUNTED SIGNAGE. REFER TO CONTRACT DRAWINGS AND SPECIFICATION 101400 FOR ADDITIONAL INFORMATION. BASE BID: PROVIDE 18" HIGH NON-ILLUMINATED CAST ALUMINUM LETTERING SIGNAGE.

NOTE: THIS ALTERNATE IS ASSOCIATED WITH, AND WILL BE AWARDED WITH ALTERNATE E-04.

G-06 FIREMATIC EQUIPMENT
CONTRACT 'G' TO PROVIDE ALL EQUIPMENT LISTED FOR ROOMS LAUNDRY 115, SCBA 121, WORK ROOM 117, AND OUTDOOR STORAGE 114 LISTED AS 'N.I.C.'. EQUIPMENT LABELED AS 'EXISTING' SHALL NOT BE INCLUDED IN PRICE TO FURNISH EQUIPMENT.

BASE BID PRICE SHALL INCLUDE INSTALLATION OF ALL EQUIPMENT FURNISHED BY OWNER.

G-07 EXTERIOR PAVILION
CONTRACT 'G' TO PROVIDE AND INSTALL EXTERIOR PAVILION IN OUTDOOR WELLNESS AREA, INCLUDING POURED CONCRETE FOUNDATIONS, AND PRE-ENGINEERED WOOD STRUCTURE (SEE SPECIFICATION 133400). REFER TO DRAWING A 428 FOR GENERAL LAYOUT.

ALL CONCRETE FLATWORK, INCLUDING SIDEWALKS AND PAD, AS SHOWN ON THE DIMENSIONAL SITE PLAN SHALL BE PROVIDED BY CONTRACT 'C' AS BASE BID SCOPE.

CONTRACT 'C'

C-01 UPPER LEVEL PARKING AREA
CONTRACT 'C' TO PROVIDE ALL ASPHALT PAVING, CONCRETE CURBING, GUIDE RAILS, DRAINAGE INLETS, AND STRIPING FOR UPPER LEVEL PARKING AND ACCESS ROAD AS OUTLINED ON CS-100.

BASE BID SHALL INCLUDE RETAINING WALL, CONCRETE STAIRS, ROUGH GRADING, ALL DRAINAGE STRUCTURES SHOWN IN THE BID DOCUMENTS AND SUB-BASE.

C-02
NOT USED

C-03 LANDSCAPING
CONTRACT 'C' TO PROVIDE PLANTINGS AS PER LS 100 LANDSCAPING PLAN AND C 504 LANDSCAPE DETAILS.

CONTRACT 'P'

P-01 UNDER CARRIAGE WASH SYSTEM
CONTRACT 'P' TO PROVIDE UNDER CARRIAGE WASH SYSTEM AS INDICATED IN THE CONTRACT DRAWINGS. ALTERNATE PRICING SHALL INCLUDE ALL MATERIAL AND LABOR FOR A COMPLETE INSTALLATION.

P-02 FUELING ISLAND
CONTRACT 'P' TO PROVIDE FUELING ISLAND AS SHOWN ON PS 101 AND PS 102. NOTE: THIS ALTERNATE IS ASSOCIATED WITH, AND WILL BE AWARDED WITH ALTERNATE E-03.

P-03 FOUR-FOLD DOOR SPRINKLERS
CONTRACT 'P' TO PROVIDE DEDUCT PRICING TO REMOVE SIDEWALL SPRINKLER HEADS SHOWN ON FP 100 AND ASSOCIATED BRANCH PIPING. NOTE: THIS ALTERNATE IS ASSOCIATED WITH, AND WILL BE AWARDED WITH ALTERNATE G-01.

P-04 GAS BOOSTER PUMP
CONTRACT 'P' TO PROVIDE GAS BOOSTER PUMP AND ASSOCIATED ENCLOSURE, PIPING, VALVES, AND MATERIALS AS INDICATED ON CONTRACT DOCUMENTS. NOTE: THIS ALTERNATE IS ASSOCIATED WITH, AND WILL BE AWARDED WITH ALTERNATE E-06.

CONTRACT 'M'

M-01 BUILDING MANAGEMNET SYSTEM (BMS)
CONTRACT 'M' TO PROVIDE PRICING FOR OPEN PROTOCOL BUILDING MANGEMENT SYSTEM (BMS)

CONTRACT 'E'

E-01 FOUR-FOLD DOORS
CONTRACT 'E' TO PROVIDE A 40A/1P CIRCUIT BREAKER WITH 2 #8 AWG + #10 AWG GND IN 1" E.C. FEEDER FOR THE GARAGE DOOR CONTROL PANEL, "GDCP". CONTRACT 'E' SHALL POWER AND PROVIDE CONTROL WIRING FOR MOTOR OPERATOR AND AUXILIARY DEVICES FROM "GDCP" IN ACCORDANCE WITH THE MANUFACTURER'S REQUIREMENTS (TYPICAL OF 5 LOCATIONS). CONTRACT 'E' SHALL COORDINATE WITH CONTRACT 'G'.
NOTE: THIS ALTERNATE IS ASSOCIATED WITH, AND WILL BE AWARDED WITH ALTERNATE G-01.

E-02 EV CHARGING STATION
CONTRACT 'E' TO PROVIDE ONE FREE STANDING "CHARGE POINT" (MODEL NO. CP600 AC DUAL PORT, 80 AMP) ELECTRIC VEHICLE CHARGING STATION (OR APPROVED EQUAL) AS INDICATED IN THE CONTRACT DOCUMENTS. ALL REQUIRED EQUIPMENT, CONDUIT, CABLE AND LABOR TO PROVIDE A FUNCTIONING SYSTEM SHALL BE INCLUDED IN THE ALTERNATE PRICE.
BASE BID: PROVIDE UNDERGROUND CONDUIT AND DRAGLINE CAPPED AT LOCATION OF EV CHARGER FOR FUTURE INSTALLATION BY THE OWNER.

CONTRACT 'E' (CONTINUED)

E-03 FUELING ISLAND
CONTRACT 'E' TO PROVIDE FEEDERS, SWITCHES AND BREAKERS AS SHOWN ON CONTRACT DOCUMENTS FOR FUELING ISLAND. BASE BID SHALL INCLUDE UNDERGROUND CONDUIT FOR POWER FEED AND DATA CONNECTIONS AS INDICATED. NOTE: THIS ALTERNATE IS ASSOCIATED WITH, AND WILL BE AWARDED WITH ALTERNATE P-02.

E-04 ILLUMINATED EXTERIOR SIGNAGE
CONTRACT 'E' TO PROVIDE PRICING TO SUPPLY POWER TO EXTERIOR ILLUMINATED BUILDING SIGNAGE AS INDICATED IN THE CONTRACT DOCUMENTS. NOTE: THIS ALTERNATE IS ASSOCIATED WITH AND WILL BE AWARDED WITH ALTERNATE G-05.

E-05 UPPER LEVEL PARKING - LIGHTING AND POWER
CONTRACT 'E' TO PROVIDE DEDUCT PRICING TO OMIT LIGHT FIXTURES, POLES, BASES, POLE MOUNTED RECEPTACLES, POWER FEEDS, JUNCTION BOXES, AND CONDUIT FOR UPPER LEVEL PARKING LOT. BASE BID SHALL INCLUDE PULLBOX AND CONDUIT SHOWN UP TO PULLBOX ON ES 100. NOTE: THIS ALTERNATE IS ASSOCIATED WITH AND WILL BE AWARDED WITH ALTERNATE C-01.

E-06 GAS BOOSTER PUMP
CONTRACT 'E' TO PROVIDE PRICING TO POWER GAS BOOSTER PUMP AND ASSOCIATED ACCESSORY OPTIONS AS INDICATED ON CONTRACT DOCUMENTS. ALL EQUIPMENT, CONDUIT, CABLE AND LABOR TO PROVIDE A FUNCTIONING SYSTEM SHALL BE INCLUDED IN THE ALTERNATE PRICE. NOTE: THIS ALTERNATE IS ASSOCIATED WITH AND WILL BE AWARDED WITH ALTERNATE P-04.

H 2 M architects + engineers

538 Broad Hollow Road, 4th Floor East
Melville, NY 11747
631.756.8000 ▪ www.h2m.com
NY Architecture & Landscape Architecture: No Certificate Required
NY Engineering Certificate of Authorization No.: 0018178

CONSULTANTS:

MARK	DATE	DESCRIPTION

REGISTERED ARCHITECT · PATRICK OTTO STONE · 039654 · STATE OF NEW YORK

10/31/2025 Exp. Date

PATRICK O. STONE, R.A.
NY PROFESSIONAL ARCHITECT Lic. No. 039654

"IN ACCORDANCE WITH ARTICLE 145, SECTION 7209 OF THE NYS EDUCATION LAW, ALTERATION OF THIS DOCUMENT EXCEPT BY A LICENSED PROFESSIONAL IS ILLEGAL"

DESIGNED BY:	DRAWN BY:	CHECKED BY:	REVIEWED BY:
DBS	ANK	DBS	POS

PROJECT No:	DATE:	SCALE:
TRFD 2302	FEBRUARY 2025	AS SHOWN

CLIENT

THIELLS ROSEVILLE FIRE DISTRICT

NEW 26-100 FIRE HEADQUARTERS

65 W RAMAPO ROAD
GARNERVILLE, NY 10923

CONTRACT
ALL CONTRACTS

STATUS
FINAL BID DOCUMENT

SHEET TITLE
GENERAL NOTES AND LEGENDS

DRAWING No.
G 001.00

C:\Users\akaled\Documents\TRFD2302_Central23-A_AKaled.rvt
2/25/2025 4:05:42 PM

BUILDING CODE OF NEW YORK STATE

(2020 BCNYS TABLE 504.3/.4 & 506.2)

	ALLOWED	PROPOSED	COMMENTS
BUILDING OCCUPANCY	B / S-2 / S-1 / A-3	B / S-2 / S-1 / A-3	NOTE 3
CONSTRUCTION CLASSIFICATION	IIIB	IIIB	-
HEIGHT (STORIES)	3	2	NOTES 3 & 4
HEIGHT (FEET)	75'-0"	28'- 0"	NOTES 3 & 4
FIRE AREA	28,500	22,644 SF	NOTES 3, 4 & 5

NOTES

1. CODE ANALYSIS PERFORMED USING 2020 BUILDING CODE OF NEW YORK STATE.
2. MODEL BUILDING CODE, WITH APPLICABLE STATE AMENDMENTS, (HEREAFTER REFERENCED AS EITHER THE 2020 BCNYS, OR THE 'NYS BUILDING CODE'; OTHER PERTINENT APPLICABLE CODES APPLICABLE CODES INCLUDE, BUT ARE NOT LIMITED TO, 2020 ENERGY CONSERVATION CONSTRUCTION CODE OF NEW YORK STATE (ECCNYS) AND THE 2020 FIRE CODE OF NEW YORK STATE (FCNYS).
3. IN REFERENCE TO NYS TECHNICAL BULLETIN DATED OCTOBER 31, 2017 (2015 IBC), THIS BUILDING SHALL BE CONSIDERED A MIXED USE, NON-SEPARATED BUILDING CONSISTING OF GROUPS B, S-2 AND A-3. IN THIS CASE, A-3 IS THE MOST RESTRICTIVE OCCUPANCY AND SHALL APPLY WHEN CALCULATING PERMITTED FIRE AREAS AND BUILDING HEIGHTS.
4. ALLOWABLE BUILDING AREA AND HEIGHT HAS BEEN CALCULATED WITH THE INCLUSION OF AN AUTOMATIC SPRINKLER SYSTEM INSTALLED IN ACCORDANCE WITH SECTION 903 OF THE BCNYS.
5. AS PER SECTION 505 OF THE BCNYS, THE MEZZANINE AREAS HAVE BEEN CALCULATED AS PART OF THE STORY BELOW.

ACCESSIBILITY PER ANSI A117.1-2009

ANSI TABLE 404.2.3.1 MANEUVERING CLEARANCES AT MANUAL SWINGING DOORS

TYPE OF USE		MINIMUM MANEUVERING CLEARANCES	
APPROACH DIRECTION	DOOR SIDE	PERPENDICULAR TO DOORWAY	PERPENDICULAR TO DOORWAY
FROM FRONT	PULL	60 INCHES (1525 MM)	18 INCHES (455 MM)
FROM FRONT	PUSH	48 INCHES (1220MM)	0 INCHES (0MM)[3]
FROM HINGE SIDE	PULL	60 INCHES (1525 MM)	36 INCHES (915 MM)
FROM HINGE SIDE	PULL	54 INCHES (1370 MM)	42 INCHES (1065 MM)
FROM HINGE SIDE	PUSH	42 INCHES (1065 MM)[1]	22 INCHES (560 MM)[3&4]
FROM LATCH SIDE	PULL	48 INCHES (1220 MM)[1]	24 INCHES (610 MM)
FROM LATCH SIDE	PUSH	42 INCHES (1065 MM)[2]	24 INCHES (610 MM)

NOTES:
1. ADD 6 INCHES (150 MM) IF CLOSER AND LATCH PROVIDED
2. ADD 6 INCHES (150 MM) IF CLOSER PROVIDED
3. ADD 12 INCHES (305 MM) BEYOND LATCH IF CLOSER AND LATCH PROVIDED.
4. BEYOND HINGE SIDE.

NEW YORK STATE ENERGY CONSERVATION CODE

(NYSECC TABLE C402.1.3) & (NYSECC TABLE C402.4)

		COMPLIANCE PATH	PRESCRIPTIVE
		CLIMATE ZONE	5A
	REQUIRED	PROVIDED	METHOD
ROOF INSULATION ENTIRELY ABOVE DECK	R-30 CI MIN.	R-44.22 CI	6" MIN. POLYISO INSULATION
MASS WALLS	R-11.4 CI MIN.	R-15 CI	3" RIGID BOARD INSULATION
METAL FRAMED WALLS	R-13 + R-7.5 CI MIN.	R-19 + R-12 CI	FIBERGLASS BATT INSULATION IN STUD CAVITY + 3" MINERAL WOOL
BELOW GRADE WALLS	R-7.5 CI MIN.	R-10 CI	2" POLYISO
UNHEATED SLABS	R-10 MIN. (FOR 24" BELOW)	R-10 CI	2" POLYISO
ENTRANCE DOORS	U = .77 MAX	U = .77 MAX	SEE SPECIFICATIONS FOR ADDITIONAL INFORMATION
OPERABLE FENESTRATION	U = .45 MAX	U = .45 MAX	SEE SPECIFICATIONS FOR ADDITIONAL INFORMATION
FIXED FENESTRATION	U = .38 MAX	U = .38 MAX	SEE SPECIFICATIONS FOR ADDITIONAL INFORMATION
GARAGE DOOR <14% GLAZING	U = .31 MAX	U = .31 MAX	SEE SPECIFICATIONS FOR ADDITIONAL INFORMATION
PF < 0.2	SHGC = .38 MAX	SHGC = .36 MAX	SEE SPECIFICATIONS FOR ADDITIONAL INFORMATION
0.2 ≤ PF < 0.5	SHGC = .46 MAX	SHGC = .43 MAX	SEE SPECIFICATIONS FOR ADDITIONAL INFORMATION
PF ≥ 0.5	SHGC = 0.61 MAX	SHGC = 0.58 MAX	SEE SPECIFICATIONS FOR ADDITIONAL INFORMATION

MINIMUM NUMBER OF EXITS PER OCCUPIED SPACE

(2020 BCNYS TABLE 1006.2.1)

	RM. #	ROOM NAME	# OF OCCUPANTS	REQ'D # OF EXITS	# OF EXITS PROVIDED
FIRST FLOOR	102	CHIEF'S OFFICE	2	1	1
	104	CONFERENCE ROOM	14*	1	2
	105	FITNESS ROOM	14	1	1
	106	LINE OFFICERS	3	1	1
	107	DAY ROOM	16	1	2
	108	UNIFORM STORAGE	1	1	1
	109	WOMEN'S AUXILIARY	1	1	1
	110	UTILITY ROOM	1	1	1
	112	GEAR AREA	3	1	2
	114	OUTDOOR STORAGE	1	1	1
	115	LAUNDRY	1	1	1
	116	FIRE GEAR STORAGE	1	1	1
	117	WORK ROOM	1	1	1
	119	RADIO ROOM	1	1	1
	120	APPARATUS BAY	32	1	1
	121	SCBA	1	1	1
	M01	STORAGE	4	1	1
	M02	UTILITY	1	1	1
	M03	FILE STORAGE	1	1	1
	M04	I.T.	1	1	1

NOTE:
* FOR THE PURPOSE OF CAPACITY OF EGRESS FROM THIS SPACE, THE OCCUPIED LOAD WAS MODIFIED TO REFLECT THE ACTUAL PROPOSED OCCUPANCY, BASED ON THE NUMBER OF CONFERENCE ROOM CHAIRS. THE MODIFIED LOAD IS HIGHER THAN THE CALCULATED LOAD BASED ON TABLE 1004.5 FROM THE 2020 BCNYS.

CAPACITY OF EXIT DOORS - 1ST FLOOR

(2020 BCNYS TABLE 1005.3.2.)

DOOR NO.	MIN. WIDTH	ACTUAL WIDTH	# OF PERSONS ALLOWED	MAX. # PROPOSED
100A	32"	72"	360	77
100B	32"	72"	360	109
100C	32"	36"	180	14
105B	32"	72"	360	14
107A	32"	36"	180	16
112A	32"	36"	180	6
115A	32"	72"	360	1
120	32"	36"	180	39

CAPACITY OF EXIT ACCESS DOORS - 1ST FLOOR

(2020 BCNYS TABLE 1005.3.2.)

DOOR NO.	MIN. WIDTH	ACTUAL WIDTH	# OF PERSONS ALLOWED	MAX. # PROPOSED
100D	32"	36"	180	3
100F	32"	36"	180	5
102	32"	36"	180	2
104	32"	36"	180	6
104A	32"	36"	180	6
106	32"	36"	180	3
108	32"	36"	180	1
109	32"	36"	180	1
114	32"	72"	360	1
116	32"	36"	180	1
118A	32"	36"	180	1
119	32"	36"	180	1
121	32"	72"	360	1

EXIT ACCESS TRAVEL DISTANCE - 1ST FLOOR

(2020 BCNYS TABLE 1017.2)

OCCUPANCY	MAX. DISTANCE WITH SPRINKLERS	PROVIDED
BUSINESS - B	300'-0" (B)	76'-3" (MAX)
STORAGE - S-1	250'-0" (S-1)	119'-4" (MAX)
STORAGE - S-2	400'-0" (S-2)	127'-2" (MAX)

APPLICABLE CODES

2020 BUILDING CODE OF NEW YORK STATE
2020 MECHANICAL CODE OF NEW YORK STATE
2020 PLUMBING CODE OF NEW YORK STATE
2020 ENERGY CONSERVATION CODE OF NEW YORK STATE
ICC/ANSI A117.1-2009 ACCESSIBLE AND USABLE BUILDINGS AND FACILITIES
2017 NATIONAL ELECTRIC CODE (NFPA-70)
2020 FIRE CODE OF NEW YORK STATE

FIRST FLOOR

1ST FLOOR GROSS AREA:	16,344 SF
1ST FLOOR NET FLOOR:	12,452 SF
1ST FLOOR OCCUPANT LOAD:	100 PERSONS
TOTAL GROSS AREA:	22,644 SF
TOTAL OCCUPANT LOAD:	276 PERSONS

NOTE: MEZZANINE FLOOR AREA SHOWN COUNTS AS PART OF FIRST FLOOR (SECTION 505.2 OF 2020 BCNYS)

GENERAL CODE NOTES

1. ALL INTERIOR WALL AND CEILING FINISHES SHALL MEET OR EXCEED THE REQUIREMENTS IDENTIFIED IN TABLE 803.13 OF THE 2020 BCNYS.
2. THIS FACILITY WILL BE EQUIPPED THROUGHOUT WITH AN AUTOMATIC FIRE SPRINKLER SYSTEM THAT COMPLIES WITH NFPA 13 AND SECTION 903 OF THE 2020 BCNYS. SEE 'FP' DRAWINGS FOR ADDITIONAL INFORMATION.
3. THIS FACILITY WILL BE EQUIPPED WITH FULLY ADDRESSABLE FIRE ALARM AND SMOKE DETECTION SYSTEM THAT COMPLIES WITH NFPA 72 AND SECTION 907 OF THE 2020 BCNYS. REFER TO 'FA' DRAWINGS FOR ADDITIONAL INFORMATION.
4. PORTABLE FIRE EXTINGUISHERS SHALL BE PROVIDED AS INDICATED IN SECTION 906 OF THE 2020 BCNYS TABLE 906.1 AND TABLE 906.3 OF THE BCNYS. PORTABLE FIRE EXTINGUISHERS SHALL ALSO BE SELECTED AND INSTALLED IN ACCORDANCE WITH NFPA 10. SEE CODE COMPLIANCE PLANS FOR QUANTITIES AND LOCATIONS OF EXTINGUISHERS.
5. MAXIMUM FLOOR AREA ALLOWANCES PER OCCUPANT INDICATED ON CODE COMPLIANCE PLANS ARE AS INDICATED ON TABLE 1004.5 OF THE 2020 BCNYS.
6. THE MINIMUM CORRIDOR WIDTH SHALL NOT BE LESS THAN 44" PER SECTION 1020.2 OF THE 2020 BCNYS.
7. AS PER SECTION 1105.1 OF THE 2020 BCNYS, 60% OF ALL PUBLIC ENTRANCES MUST BE ACCESSIBLE. SEVEN (7) OF THE NINE (9) ENTRANCES INTO THE BUILDING ARE ACCESSIBLE. (71%) SEE CODE COMPLIANCE PLAN FOR LOCATIONS AND ADDITIONAL INFORMATION.
8. ALL GLAZING IN DOORS, FIXED SIDE PANELS ADJOINING DOORS, INTERIOR PARTITIONS WHERE GLAZING EXTENDS TO WITHIN 1'-6" OF FINISHED FLOOR AND GLASS PANELS GREATER THAN 50 SF TO BE FULLY TEMPERED SAFETY GLASS PER CHAPTER 24 OF THE 2020 BCNYS.
9. UTILITY ROOM 110 EXIT DOOR TO RECEIVE PANIC HARDWARE - REFER TO DOOR SCHEDULE FOR ADDITIONAL INFORMATION. SPRINKLER COVERAGE PROVIDED, NO FIRE RATING REQUIRED AS PER NFPA 13

LEGEND

(hatch)	1 HOUR MIN. FIRE RATED WALLS 45 MIN. FIRE RATED OPENING PROTECTIVE REFER TO WALL TYPES	(hatch)	1 HOUR MIN. FIRE RATED FLOOR/CEILING ASSEMBLY UL: U417
ROOM NAME AND NUMBER / OCCUPANCY TYPE / AREA OF SPACE	ROOM NAME - 101 / OCCUPANCY TYPE, # OF OCCUPANT(S) / AREA SF, # SF/OCCUPANT	NUMBER OF OCCUPANT(S) / SF PER OCCUPANT	ADA ACCESSIBLE ENTRANCE
1001A	EXIT ACCESS DOOR	1001A	EXIT DOOR
EW	EYE WASH	FE	SURFACE MOUNTED FIRE EXTINGUISHER
— — — —	PATH OF EGRESS		WASH BASIN W/ EYE WASH
FEC	RECESSED FIRE EXTINGUISHER	EX	EXIT SIGN
DF	DRINKING FOUNTAIN		

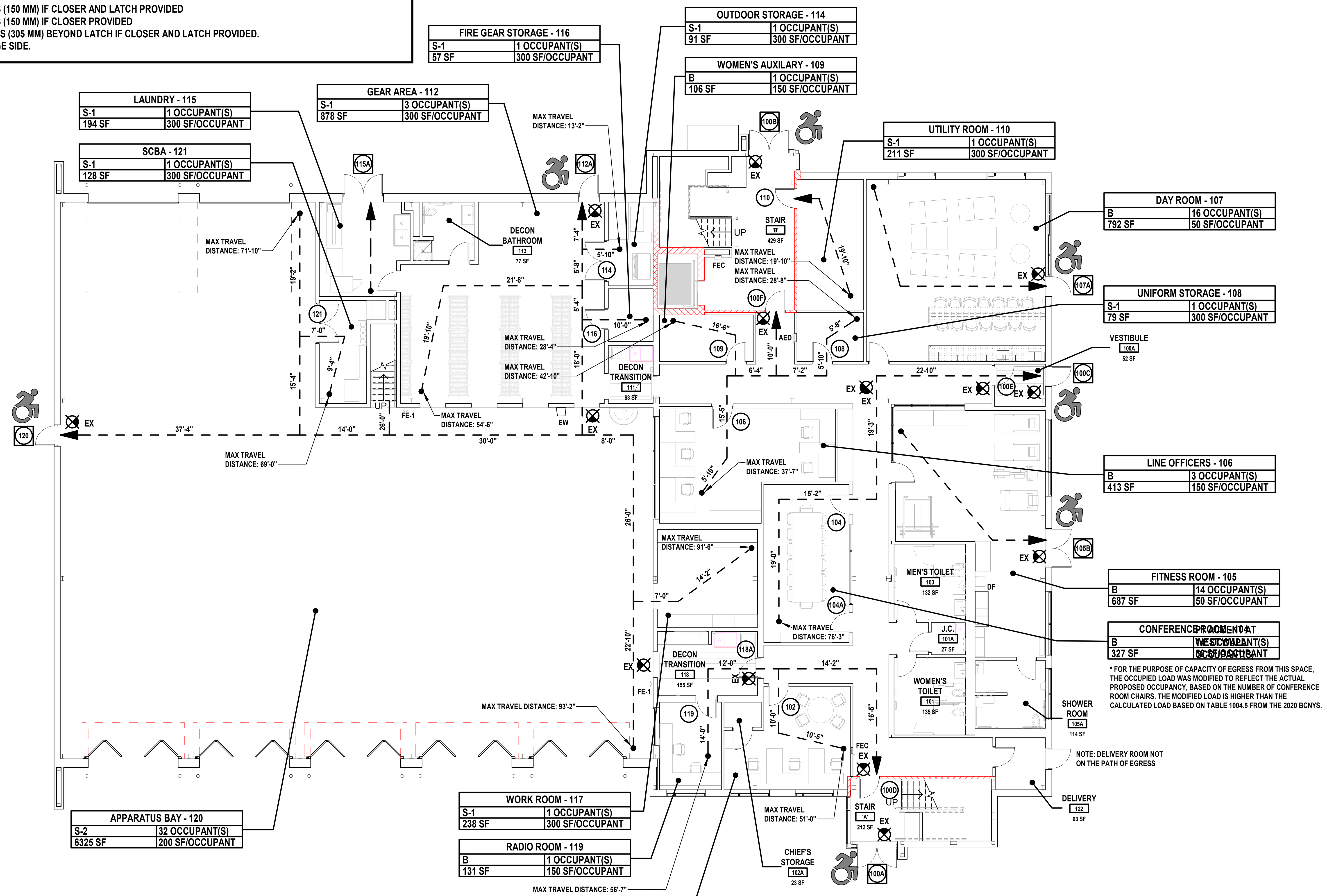

1 First Floor Code Compliance Plan
SCALE: 3/32" = 1'-0"

H2M architects + engineers
538 Broad Hollow Road, 4th Floor East
Melville, NY 11747
631.756.8000 • www.h2m.com
NY Architecture & Landscape Architecture: No Certificate Required
NY Engineering Certificate of Authorization No.: 0018178

CONSULTANTS:

PATRICK O. STONE, R.A.
NY PROFESSIONAL ARCHITECT Lic. No. 039654
10/31/2025 Exp. Date

"IN ACCORDANCE WITH ARTICLE 145, SECTION 7209 OF THE NYS EDUCATION LAW, ALTERATION OF THIS DOCUMENT EXCEPT BY A LICENSED PROFESSIONAL IS ILLEGAL"

MARK	DATE	DESCRIPTION

DESIGNED BY:	DRAWN BY:	CHECKED BY:	REVIEWED BY:
DBS	KAP/ANK	KMS	POS

PROJECT No:	DATE:	SCALE:
TRFD 2302	FEBRUARY 2025	AS SHOWN

CLIENT

THIELLS ROSEVILLE FIRE DISTRICT

NEW 26-100 FIRE HEADQUARTERS

65 W RAMAPO ROAD
GARNERVILLE, NY 10923

CONTRACT: ALL CONTRACTS

STATUS: FINAL BID DOCUMENT

SHEET TITLE: NEW YORK STATE CODE ANALYSIS FIRST FLOOR

DRAWING No. **G 010.00**

C:\Users\akaled\Documents\TRFD2302_Central23-A_AKaled.rvt
2/25/2025 4:05:55 PM

PLUMBING FIXTURE REQUIREMENTS

(2020 PCNYS TABLE 403.1)

SPACE		WATER CLOSETS				LAVATORIES			BATHTUBS/SHOWERS		DRINKING FOUNTAIN	
USE	LOAD	RATIO	MALE	RATIO	FEMALE	RATIO	MALE	FEMALE	RATIO	REQ'D	RATIO	REQ'D
BUSINESS 'B'	69	1 PER 25 FOR THE FIRST 50	1.38	1 PER 25 FOR THE FIRST 50	1.38	1 PER 40 FOR THE FIRST 80	0.86	0.86	N/A	-	1 PER 100	0.69
ASSEMBLY A-3	157	1 PER 125	1.05	1 PER 65	1.05	1 PER 200	0.39	0.39	N/A	-	1 PER 500	0.31
STORAGE 'S'	50	1 PER 100	0.25	1 PER 100	0.25	1 PER 100	0.25	0.25	SEE NOTE 3		1 PER 1,000	0.05
SUB-TOTAL	276		2.68		2.68		1.51	1.51		-		1.05
TOTAL REQUIRED			3		3		2	2		-		2
TOTAL PROVIDED			5 (4,5)		4 (4)		4 (4)	3 (4)		1(4)		2(4)

NOTES:

1. THE 2020 PCNYS REQUIRES ONLY ONE SERVICE SINK PER BUILDING IF ALL OCCUPANCIES HAVE ACCESS TO THE SERVICE SINK AT ALL TIMES. THIS BUILDING IS EQUIPPED WITH 2 SERVICE SINKS.
2. PER SECTION 403.3.3 OF THE 2020 BCNYS, TOILET FACILITIES ARE REQUIRED TO BE LOCATED WITHIN 500 FEET AND ONE STORY ABOVE OR BELOW THE SPACE THAT REQUIRES THEM. FULL COMPLIANCE WITH THIS REQUIREMENT HAS BEEN PROVIDED.
3. THIS FACILITY IS EQUIPPED WITH 2 EMERGENCY EYEWASH STATIONS THAT COMPLY WITH SECTION 411 OF THE 2020 PCNYS.
4. WATER DISPENSER TO BE PROVIDED IN MULTI-PURPOSE ROOM 203 TO SATISFY SECOND DRINKING FOUNTAIN REQUIREMENT.
5. TWO WATER CLOSETS WERE SUBSTITUTED FOR URINALS IN MENS 103 & 209. URINALS DO NOT MAKE UP MORE THAN 67 PERCENT OF REQUIRED WATER CLOSETS AS PER SECTION 424.2.

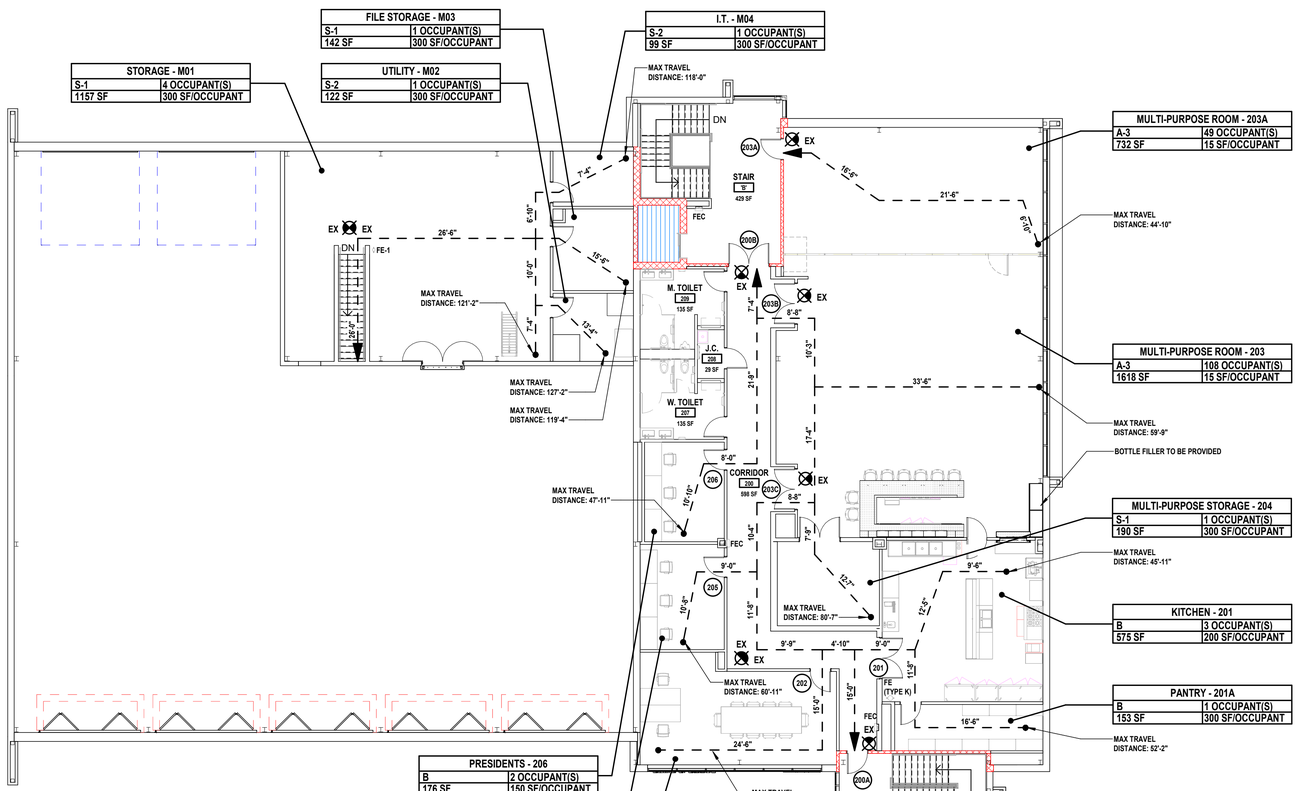

1 Second Floor Code Compliance Plan

SCALE: 3/32" = 1'-0"

* FOR THE PURPOSE OF CAPACITY OF EGRESS FROM THIS SPACE, THE OCCUPIED LOAD WAS MODIFIED TO REFLECT THE ACTUAL PROPOSED OCCUPANCY, BASED ON THE NUMBER OF CONFERENCE ROOM CHAIRS. THE MODIFIED LOAD IS HIGHER THAN THE CALCULATED LOAD BASED ON TABLE 1004.5 FROM THE 2020 BCNYS.

CAPACITY OF EXIT ACCESS DOORS - 2ND FLOOR

(2020 BCNYS TABLE 1005.3.2.)

DOOR NO.	MIN. WIDTH	ACTUAL WIDTH	# OF PERSONS ALLOWED	MAX. # PROPOSED
200A	32"	36"	180	71
200B	32"	72"	360	56
201	32"	72"	360	4
202	32"	36"	180	10
203A	32"	36"	180	49
203B	32"	72"	360	54
203C	32"	72"	360	54
205	32"	36"	180	2
206	32"	36"	180	2

EXIT ACCESS TRAVEL DISTANCE - 2ND FLOOR

(2020 BCNYS TABLE 1017.2)

OCCUPANCY	MAX. DISTANCE WITH SPRINKLERS	PROVIDED
ASSEMBLY - A-3	250'-0" (A-3)	59'-9" (MAX)
STORAGE - S-1	250'-0" (S-1)	80'-7" (MAX)
BUSINESS - B	300'-0" (B)	60'-11" (MAX)

MINIMUM NUMBER OF EXITS PER OCCUPIED SPACE

(2020 BCNYS TABLE 1006.2.1)

	RM. #	ROOM NAME	# OF OCCUPANTS	REQ'D # OF EXITS	# OF EXITS PROVIDED
SECOND FLOOR	201	KITCHEN	3	1	1
	201A	PANTRY	1	1	1
	202	COMMISSIONERS	10*	1	1
	203	MULTI-PURPOSE ROOM	108	2	2
	203A	MULTI-PURPOSE ROOM	49	1	1
	204	MULTI-PURPOSE STORAGE	1	1	1
	205	PURCHASING	2	1	1
	206	PRESIDENTS	2	1	1

NOTE:

* FOR THE PURPOSE OF CAPACITY OF EGRESS FROM THIS SPACE, THE OCCUPIED LOAD WAS MODIFIED TO REFLECT THE ACTUAL PROPOSED OCCUPANCY, BASED ON THE NUMBER OF CONFERENCE ROOM CHAIRS. THE MODIFIED LOAD IS HIGHER THAN THE CALCULATED LOAD BASED ON TABLE 1004.5 FROM THE 2020 BCNYS.

APPLICABLE CODES

2020 BUILDING CODE OF NEW YORK STATE
2020 MECHANICAL CODE OF NEW YORK STATE
2020 PLUMBING CODE OF NEW YORK STATE
2020 ENERGY CONSERVATION CODE OF NEW YORK STATE
ICC/ANSI A117.1-2009 ACCESSIBLE AND USABLE BUILDINGS AND FACILITIES
2017 NATIONAL ELECTRIC CODE (NFPA-70)
2020 FIRE CODE OF NEW YORK STATE

SECOND FLOOR

2ND FLOOR GROSS AREA:	6,300 SF
2ND NET FLOOR AREA:	4,080 SF
2ND FLOOR OCCUPANT LOAD:	176 PERSONS
TOTAL GROSS AREA:	22,644 SF
TOTAL OCCUPANT LOAD:	276 PERSONS

NOTE: MEZZANINE FLOOR AREA SHOWN COUNTS AS PART OF FIRST FLOOR (SECTION 505.2 OF 2020 BCNYS)

GENERAL CODE NOTES

1. ALL INTERIOR WALL AND CEILING FINISHES SHALL MEET OR EXCEED THE REQUIREMENTS IDENTIFIED IN TABLE 803.13 OF THE 2020 BCNYS.
2. THIS FACILITY WILL BE EQUIPPED THROUGHOUT WITH AN AUTOMATIC FIRE SPRINKLER SYSTEM THAT COMPLIES WITH NFPA 13 AND SECTION 903 OF THE 2020 BCNYS. SEE 'FP' DRAWINGS FOR ADDITIONAL INFORMATION.
3. THIS FACILITY WILL BE EQUIPPED WITH FULLY ADDRESSABLE FIRE ALARM AND SMOKE DETECTION SYSTEM THAT COMPLIES WITH NFPA 72 AND SECTION 907 OF THE 2020 BCNYS. REFER TO 'FA' DRAWINGS FOR ADDITIONAL INFORMATION.
4. PORTABLE FIRE EXTINGUISHERS SHALL BE PROVIDED AS INDICATED IN SECTION 906 OF THE 2020 BCNYS TABLE 906.1 AND TABLE 906.3 OF THE BCNYS. PORTABLE FIRE EXTINGUISHERS SHALL ALSO BE SELECTED AND INSTALLED IN ACCORDANCE WITH NFPA 10. SEE CODE COMPLIANCE PLANS FOR QUANTITIES AND LOCATIONS OF EXTINGUISHERS.
5. MAXIMUM FLOOR AREA ALLOWANCES PER OCCUPANT INDICATED ON CODE COMPLIANCE PLANS ARE AS INDICATED ON TABLE 1004.5 OF THE 2020 BCNYS.
6. THE MINIMUM CORRIDOR WIDTH SHALL NOT BE LESS THAN 44" PER SECTION 1020.2 OF THE 2020 BCNYS.
7. AS PER SECTION 1105.1 OF THE 2020 BCNYS, 60% OF ALL PUBLIC ENTRANCES MUST BE ACCESSIBLE. SEVEN (7) OF THE NINE (9) ENTRANCES INTO THE BUILDING ARE ACCESSIBLE. (71%) SEE CODE COMPLIANCE PLAN FOR LOCATIONS AND ADDITIONAL INFORMATION.
8. ALL GLAZING IN DOORS, FIXED SIDE PANELS ADJOINING DOORS, INTERIOR PARTITIONS WHERE GLAZING EXTENDS TO WITHIN 1'-6" OF FINISHED FLOOR AND GLASS PANELS GREATER THAN 50 SF TO BE FULLY TEMPERED SAFETY GLASS PER CHAPTER 24 OF THE 2020 BCNYS.
9. UTILITY ROOM 110 EXIT DOOR TO RECEIVE PANIC HARDWARE - REFER TO DOOR SCHEDULE FOR ADDITIONAL INFORMATION. SPRINKLER COVERAGE PROVIDED, NO FIRE RATING REQUIRED AS PER NFPA 13

LEGEND

1 HOUR MIN. FIRE RATED WALLS 45 MIN. FIRE RATED OPENING PROTECTIVE REFER TO WALL TYPES

1 HOUR MIN. FIRE RATED FLOOR/CEILING ASSEMBLY UL: U417

ROOM NAME AND NUMBER — ROOM NAME - 101
OCCUPANCY TYPE — OCCUPANCY TYPE | # OF OCCUPANT(S)
AREA OF SPACE — AREA SF | # SF/OCCUPANT
NUMBER OF OCCUPANT(S)
SF PER OCCUPANT

					ADA ACCESSIBLE ENTRANCE
1001A	EXIT ACCESS DOOR	1001A	EXIT DOOR	EW	EYE WASH
FE	SURFACE MOUNTED FIRE EXTINGUISHER		PATH OF EGRESS		WASH BASIN W/ EYE WASH
FEC	RECESSED FIRE EXTINGUISHER	EX	EXIT SIGN	DF	DRINKING FOUNTAIN

H2M architects + engineers
538 Broad Hollow Road, 4th Floor East
Melville, NY 11747
631.756.8000 • www.h2m.com
NY Architecture & Landscape Architecture: No Certificate Required
NY Engineering Certificate of Authorization No.: 0018178

CONSULTANTS:

MARK	DATE	DESCRIPTION

REGISTERED ARCHITECT PATRICK O. STONE STATE OF NEW YORK 039654

10/31/2025
Exp. Date

PATRICK O. STONE, R.A.
NY PROFESSIONAL ARCHITECT Lic. No. 039654

"IN ACCORDANCE WITH ARTICLE 145, SECTION 7209 OF THE NYS EDUCATION LAW, ALTERATION OF THIS DOCUMENT EXCEPT BY A LICENSED PROFESSIONAL IS ILLEGAL."

DESIGNED BY:	DRAWN BY:	CHECKED BY:	REVIEWED BY:
DBS	KAP/ANK	KMS	POS
PROJECT No: TRFD 2302	DATE: FEBRUARY 2025	SCALE: AS SHOWN	

CLIENT

THIELLS ROSEVILLE FIRE DISTRICT

NEW 26-100 FIRE HEADQUARTERS

THIELLS 26 FD

65 W RAMAPO ROAD
GARNERVILLE, NY 10923

CONTRACT

ALL CONTRACTS

STATUS

FINAL BID DOCUMENT

SHEET TITLE

NEW YORK STATE CODE ANALYSIS SECOND FLOOR

DRAWING No.

G 011.00

C:\Users\ksalade\Documents\TRFD2302_Central23-A_AKalad.rvt

2/25/2025 4:05:59 PM

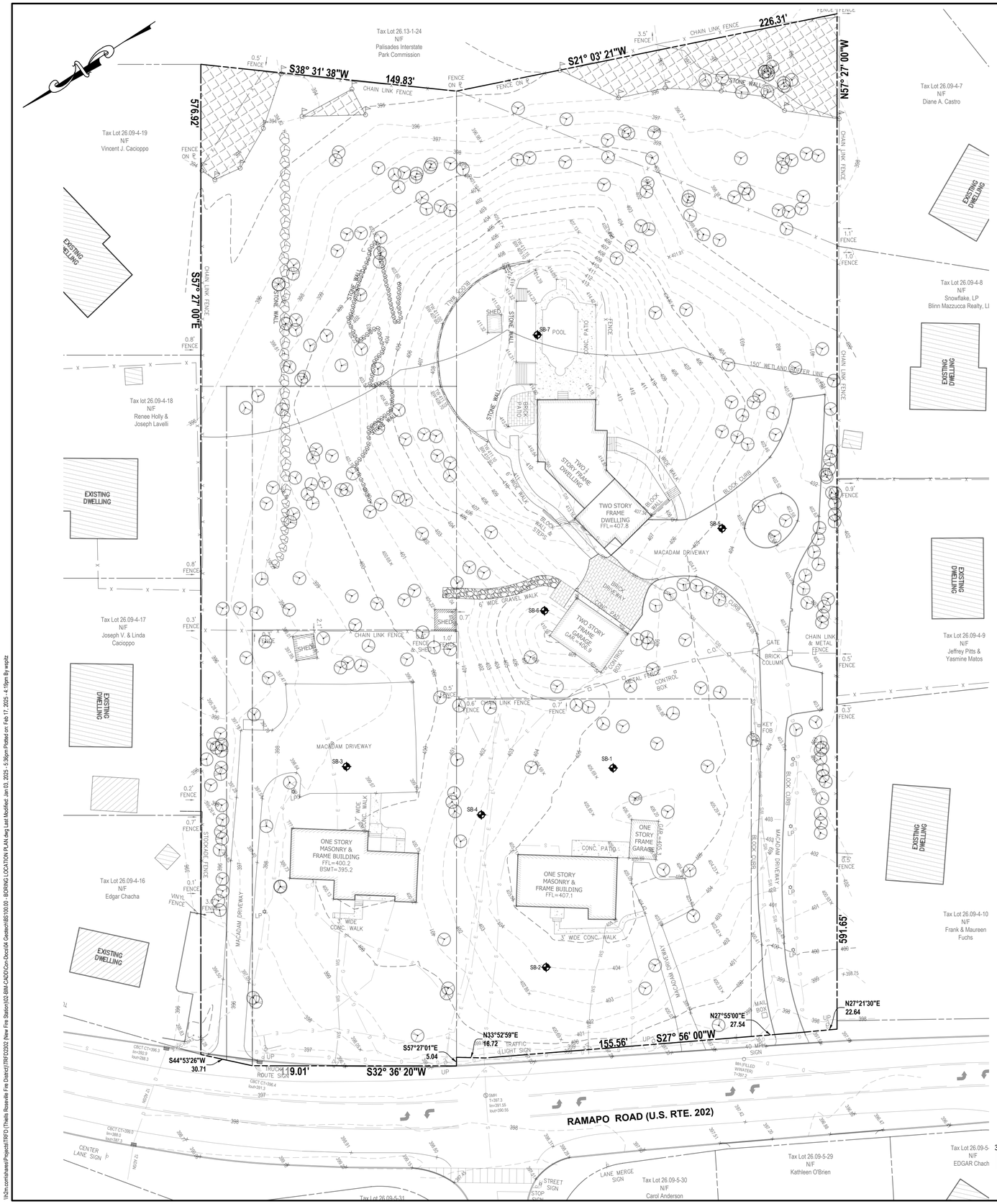

LEGEND

DESCRIPTION	SYMBOL
BORING LOCATION	SB-1

NOTES:

1. FOR RECORD OF SUBSURFACE EXPLORATION, REFER TO SHEETS BS101 & BS102.
2. SUBSURFACE EXPLORATION WAS PERFORMED BY WHITESTONE ASSOCIATES ENGINEERING & GEOLOGY NY, PLLC. ON 9/3/24 & 9/4/24.

H2M architects + engineers

538 Broad Hollow Road, 4th Floor East
Melville, NY 11747
631.756.8000 • www.h2m.com
NY Architecture & Landscape Architecture: No Certificate Required
NY Engineering Certificate of Authorization No. 0018178

CONSULTANTS:

MARK	DATE	DESCRIPTION

DESIGNED BY:	DRAWN BY:	CHECKED BY:	REVIEWED BY:

PROJECT No.:	DATE:	SCALE:
TRFD 2302	FEBRUARY 2025	AS SHOWN

CLIENT

THIELLS ROSEVILLE FIRE DISTRICT

NEW 26-100 FIRE HEADQUARTERS

65 W RAMAPO RD
GARNERVILLE, NY 10923

CONTRACT

ALL CONTRACTS

STATUS

FINAL BID DOCUMENT

SHEET TITLE

BORING LOCATION PLAN

DRAWING No.

BS 100.00

RECORD OF SUBSURFACE EXPLORATION

WHITESTONE

Boring No.: SB-1
Page 1 of 2

Project: Proposed Fire Station — **WAI Project No.:** GJ2422032.Y00
Location: 63 – 69 West Ramapo Road & One Angelus Drive; Garnerville, Town of Haverstraw, Rockland County, NY — **Client:** Thiells Roseville Fire Department

Surface Elevation: ± 406.0 feet
Termination Depth: 25.8 feet bgs
Proposed Location: Building
Drill / Test Method: HSA / SPT

Date Started: 9/3/2024
Date Completed: 9/3/2024
Logged By: RN
Contractor: GB
Equipment: Diedrich D50

	Water Depth (feet bgs)	Elevation (feet)	Cave-In Depth (feet bgs)	Elevation (feet)
During:	12.0	394.0		
At Completion:	12.0	394.0	10.0	396.0
24 Hours:	---	---	---	---

Depth (feet)	No	Type	Blows Per 6"	Rec. (in.)	N	Depth (feet)	Strata	Description of Materials (Classification)	Remarks
						0.0	TOPSOIL	4" Topsoil	
0 - 2	S-1		2 - 2 - 4 - 3	12	6	0.3	FILL	Brown Sandy Silt, Moist (FILL)	
2 - 4	S-2		4 - 6 - 11 - 12	14	17	2.0	GLACIAL DEPOSITS	Brown Poorly Graded Sand, Little Gravel, Moist, Medium Dense (SP)	
4 - 6	S-3		12 - 20 - 27 - 21	12	47	5.0		Brown Poorly Graded Gravel with Silt and Sand, Moist, Dense (GP-GM)	
6 - 8	S-4		17 - 16 - 13 - 14	10	29			Brown Poorly Graded Sand, Trace Silt, Moist, Medium Dense (SP)	
8 - 10	S-5		6 - 8 - 11 - 10	7	19			As Above, Little Gravel (SP)	
10 - 12	S-6		6 - 5 - 5 - 4	20	10	10.0		As Above (SP)	
									Water @ 12.0 ftgs Tip of Spoon
15 - 17	S-7		7 - 20 - 18 - 15	19	38	15.0		Brown Poorly Graded Sand with Gravel, Trace Silt, Wet, Dense (SP)	
20 - 21.8	S-8		7 - 15 - 29 - 50/3"	14	44	20.0		Brown Poorly Graded Sand, Little Gravel, Trace Silt, Wet, Dense (SP)	
									Rough Drilling 22.0 ftgs to 25.0 ftgs
						25.0			

NOTES: bgs = below ground surface, NA = Not Applicable, NE = Not Encountered, NS = Not Surveyed, P = Perched

RECORD OF SUBSURFACE EXPLORATION 22032_SBlogs 9/23/2024

RECORD OF SUBSURFACE EXPLORATION

WHITESTONE

Boring No.: SB-1
Page 2 of 2

Project: Proposed Fire Station — **WAI Project No.:** GJ2422032.Y00
Location: 63 – 69 West Ramapo Road & One Angelus Drive; Garnerville, Town of Haverstraw, Rockland County, NY — **Client:** Thiells Roseville Fire Department

Surface Elevation: ± 406.0 feet
Termination Depth: 25.8 feet bgs
Proposed Location: Building
Drill / Test Method: HSA / SPT

Date Started: 9/3/2024
Date Completed: 9/3/2024
Logged By: RN
Contractor: GB
Equipment: Diedrich D50

	Water Depth (feet bgs)	Elevation (feet)	Cave-In Depth (feet bgs)	Elevation (feet)
During:	12.0	394.0		
At Completion:	12.0	394.0	10.0	396.0
24 Hours:	---	---	---	---

Depth (feet)	No	Type	Blows Per 6"	Rec. (in.)	N	Depth (feet)	Strata	Description of Materials (Classification)	Remarks
25 - 25.8	S-9		43 - 50/3"	10	50/3"	25.0	GLACIAL DEPOSITS	Brown Silt, Little Gravel, Little Clay, Wet, Hard (ML)	Qu = 4.5 tsf
						25.8		Boring Log SB-1 Terminated at a Depth of 25.8 Feet Below Ground Surface	
						30.0			
						35.0			
						40.0			
						45.0			
						50.0			

NOTES: bgs = below ground surface, NA = Not Applicable, NE = Not Encountered, NS = Not Surveyed, P = Perched

RECORD OF SUBSURFACE EXPLORATION 22032_SBlogs 9/23/2024

RECORD OF SUBSURFACE EXPLORATION

WHITESTONE

Boring No.: SB-2
Page 1 of 1

Project: Proposed Fire Station — **WAI Project No.:** GJ2422032.Y00
Location: 63 – 69 West Ramapo Road & One Angelus Drive; Garnerville, Town of Haverstraw, Rockland County, NY — **Client:** Thiells Roseville Fire Department

Surface Elevation: ± 404.0 feet
Termination Depth: 8.5 feet bgs
Proposed Location: SMP / Building
Drill / Test Method: HSA / SPT

Date Started: 9/3/2024
Date Completed: 9/3/2024
Logged By: RN
Contractor: GB
Equipment: Diedrich D50

	Water Depth (feet bgs)	Elevation (feet)	Cave-In Depth (feet bgs)	Elevation (feet)
During:	NE	---		
At Completion:	NE	---	DNC	---
24 Hours:	---	---	---	---

Depth (feet)	No	Type	Blows Per 6"	Rec. (in.)	N	Depth (feet)	Strata	Description of Materials (Classification)	Remarks
						0.0	TOPSOIL	6" Topsoil	
0 - 2	S-1		1 - 2 - 2 - 3	18	4	0.5	FILL	Brown Sandy Silt, Moist (FILL)	
2 - 4	S-2		3 - 3 - 4 - 4	20	7	2.8		As Above (FILL) Brown Poorly Graded Sand, Moist (FILL)	
4 - 6	S-3		2 - 3 - 2 - 3	12	5	5.0		As Above (FILL)	
6 - 8	S-4		2 - 4 - 8 - 11	18	12	6.0	GLACIAL DEPOSITS	Brown Silty Sand with Gravel, Moist, Medium Dense (SM)	
8 - 8.4	S-5		50/5"	NR	50/5"	8.5		No Recovery, Assumed As Above, Very Dense (SM)	Rough Drilling
						10.0		Boring Log SB-2 Terminated at a Depth of 8.5 Feet Below Ground Surface Due to Auger Refusal	
						15.0			
						20.0			
						25.0			

NOTES: bgs = below ground surface, NA = Not Applicable, NE = Not Encountered, NS = Not Surveyed, P = Perched

RECORD OF SUBSURFACE EXPLORATION 22032_SBlogs 9/23/2024

NOTES:

1. FOR BORING LOCATION INFORMATION REFER TO SHEET BS100.00.
2. SUBSURFACE EXPLORATION WAS PERFORMED BY WHITESTONE ASSOCIATES ENGINEERING & GEOLOGY NY, PLLC. ON 9/3/24 & 9/4/24.

RECORD OF SUBSURFACE EXPLORATION

WHITESTONE

Boring No.: SB-3
Page 1 of 1

Project: Proposed Fire Station — **WAI Project No.:** GJ2422032.Y00
Location: 63 – 69 West Ramapo Road & One Angelus Drive; Garnerville, Town of Haverstraw, Rockland County, NY — **Client:** Thiells Roseville Fire Department

Surface Elevation: ± 400.0 feet
Termination Depth: 12.0 feet bgs
Proposed Location: Building
Drill / Test Method: HSA / SPT

Date Started: 9/3/2024
Date Completed: 9/3/2024
Logged By: RN
Contractor: GB
Equipment: Diedrich D50

	Water Depth (feet bgs)	Elevation (feet)	Cave-In Depth (feet bgs)	Elevation (feet)
During:	8.0	392.0		
At Completion:	8.0	392.0	8.0	392.0
24 Hours:	---	---	---	---

Depth (feet)	No	Type	Blows Per 6"	Rec. (in.)	N	Depth (feet)	Strata	Description of Materials (Classification)	Remarks
						0.0	PAVEMENT	3" Asphalt, No Apparent Subbase	
1 - 3	S-1		1 - 4 - 3 - 3	4	7	0.3	FILL	Brown Silty Sand, Some Gravel, Moist (FILL)	
3 - 5	S-2		2 - 3 - 4 - 12	8	7	5.0		As Above (FILL)	
5 - 7	S-3		23 - 22 - 22 - 20	6	44		GLACIAL DEPOSITS	Brown Poorly Graded Sand, Some Gravel, Trace Silt, Moist, Dense (SP)	
7 - 9	S-4		17 - 10 - 8 - 9	12	18	7.0		Brown Silt, Little Sand, Moist to Wet, Very Stiff (ML)	Qu = 3.0 tsf Water @ 8.0 ftgs
9 - 11	S-5		9 - 9 - 21 - 23	3	30	10.0		Brown Poorly Graded Gravel with Sand, Trace Silt, Wet, Dense (GP)	Rough Drilling 10.0 ftgs to 12.0 ftgs
						12.0		Boring Log SB-3 Terminated at a Depth of 12.0 Feet Below Ground Surface Due to Auger Refusal	
						15.0			
						20.0			
						25.0			

NOTES: bgs = below ground surface, NA = Not Applicable, NE = Not Encountered, NS = Not Surveyed, P = Perched

RECORD OF SUBSURFACE EXPLORATION 22032_SBlogs 9/23/2024

RECORD OF SUBSURFACE EXPLORATION

WHITESTONE

Boring No.: SB-4
Page 1 of 2

Project: Proposed Fire Station — **WAI Project No.:** GJ2422032.Y00
Location: 63 – 69 West Ramapo Road & One Angelus Drive; Garnerville, Town of Haverstraw, Rockland County, NY — **Client:** Thiells Roseville Fire Department

Surface Elevation: ± 404.0 feet
Termination Depth: 31.0 feet bgs
Proposed Location: Building
Drill / Test Method: HSA / SPT

Date Started: 9/4/2024
Date Completed: 9/4/2024
Logged By: RN
Contractor: GB
Equipment: Diedrich D50

	Water Depth (feet bgs)	Elevation (feet)	Cave-In Depth (feet bgs)	Elevation (feet)
During:	11.0	393.0		
At Completion:	11.0	393.0	---	---
24 Hours:	---	---	---	---

Depth (feet)	No	Type	Blows Per 6"	Rec. (in.)	N	Depth (feet)	Strata	Description of Materials (Classification)	Remarks
						0.0	TOPSOIL	3" Topsoil	
0 - 2	S-1		1 - 2 - 2 - 2	2	4	0.3	FILL	Brown Sandy Silt, Moist (FILL)	
2 - 4	S-2		1 - 1 - 1 - 1	5	2	4.0		As Above (FILL)	
4 - 6	S-3		2 - 3 - 16 - 19	10	19	5.0	GLACIAL DEPOSITS	Brown Poorly Graded Sand, Some Gravel, Moist, Medium Dense (SP)	
6 - 8	S-4		15 - 21 - 16 - 15	18	37			As Above, Little Gravel, Dense (SP)	
8 - 10	S-5		10 - 11 - 9 - 9	21	20			As Above, No Gravel, Medium Dense (SP)	
10 - 12	S-6		4 - 4 - 3 - 3	18	7	10.0		As Above, Moist to Wet, Loose (SP)	Water @ 11.0 ftgs
15 - 17	S-7		14 - 15 - 15 - 23	14	30	15.0		Brown Silty Sand, Trace Clay, Wet (SM)	
20 - 22	S-8		47 - 12 - 13 - 13	18	25	20.0		As Above, Some Gravel, Medium Dense (SM)	
						25.0			

NOTES: bgs = below ground surface, NA = Not Applicable, NE = Not Encountered, NS = Not Surveyed, P = Perched

RECORD OF SUBSURFACE EXPLORATION 22032_SBlogs 9/23/2024

RECORD OF SUBSURFACE EXPLORATION

WHITESTONE

Boring No.: SB-4
Page 2 of 2

Project: Proposed Fire Station — **WAI Project No.:** GJ2422032.Y00
Location: 63 – 69 West Ramapo Road & One Angelus Drive; Garnerville, Town of Haverstraw, Rockland County, NY — **Client:** Thiells Roseville Fire Department

Surface Elevation: ± 404.0 feet
Termination Depth: 31.0 feet bgs
Proposed Location: Building
Drill / Test Method: HSA / SPT

Date Started: 9/4/2024
Date Completed: 9/4/2024
Logged By: RN
Contractor: GB
Equipment: Diedrich D50

	Water Depth (feet bgs)	Elevation (feet)	Cave-In Depth (feet bgs)	Elevation (feet)
During:	11.0	393.0		
At Completion:	11.0	393.0	---	---
24 Hours:	---	---	---	---

Depth (feet)	No	Type	Blows Per 6"	Rec. (in.)	N	Depth (feet)	Strata	Description of Materials (Classification)	Remarks
25 - 25.3	S-9		50/4"	4	50/4"	25.0	GLACIAL DEPOSITS	Gray Silty Sand, Some Gravel, Trace Clay, Wet, Very Dense (SM)	Rough Drilling 25.5 ftgs to 30.0 ftgs
30 - 30.3	S-10		50/4"	4	50/4"	30.0		As Above (SM)	
						31.0		Boring Log SB-4 Terminated at a Depth of 31.0 Feet Below Ground Surface Due to Auger Refusal	
						35.0			
						40.0			
						45.0			
						50.0			

NOTES: bgs = below ground surface, NA = Not Applicable, NE = Not Encountered, NS = Not Surveyed, P = Perched

RECORD OF SUBSURFACE EXPLORATION 22032_SBlogs 9/23/2024

H2M architects + engineers

538 Broad Hollow Road, 4th Floor East
Melville, NY 11747
631.756.8000 • www.h2m.com
NY Architecture & Landscape Architecture: No Certificate Required
NY Engineering Certificate of Authorization No. 0018178

CONSULTANTS:

MARK	DATE	DESCRIPTION

DESIGNED BY:	DRAWN BY:	CHECKED BY:	REVIEWED BY:

PROJECT No.:	DATE:	SCALE:
TRFD 2302	FEBRUARY 2025	AS SHOWN

CLIENT

THIELLS ROSEVILLE FIRE DISTRICT

NEW 26-100 FIRE HEADQUARTERS

65 W RAMAPO RD GARNERVILLE, NY 10923

CONTRACT

ALL CONTRACTS

STATUS

FINAL BID DOCUMENT

SHEET TITLE

RECORD OF SUBSURFACE EXPLORATION (1 OF 2)

DRAWING No.

BS 101.00

\\h2m.com\shares\Projects\TRFD (Thiells Roseville Fire District)\TRFD2302 (New Fire Station)\02-BIM-CADD\Civil-Docs\04 Geotech\BS101.00 - RECORD OF SUBSURFACE EXPLORATION (1 OF 2).dwg Last Modified: Oct 25, 2024 - 10:33am Plotted on: Feb 17, 2025 - 4:15pm By:wsdtz

WHITESTONE — RECORD OF SUBSURFACE EXPLORATION

Boring No.: SB-5 Page 1 of 2

Project:	Proposed Fire Station	**WAI Project No.:**	GJ2422032.Y00
Location:	63 – 69 West Ramapo Road & One Angelus Drive; Garnerville, Town of Haverstraw, Rockland County, NY	**Client:**	Thiells Roseville Fire Department

Surface Elevation:	± 404.0 feet	**Date Started:**	9/3/2024		**Water Depth (feet bgs) | Elevation (feet)**		**Cave-In Depth (feet bgs) | Elevation (feet)**
Termination Depth:	27.0 feet bgs	**Date Completed:**	9/3/2024	**During:**	13.0 | 391.0		
Proposed Location:	Pavement/SWM	**Logged By:**	RN	**At Completion:**	12.0 | 392.0	**At Completion:**	13.0 | 391.0
Drill / Test Method:	HSA / SPT	**Contractor:**	GB	**24 Hours:**	--- | ---	**24 Hours:**	--- | ---
		Equipment:	Diedrich D50				

Depth (feet)	No	Type	Blows Per 6"	Rec. (in.)	N	DEPTH (feet)	STRATA	DESCRIPTION OF MATERIALS (Classification)	REMARKS
						0.0 – 0.3	PAVEMENT	3" Asphalt, No Apparent Subbase	
1 - 3	S-1	X	1 - 2 - 2 - 3	12	4	0.3 – 3.0	FILL	Brownish-Yellow Silt, Trace Sand, Moist (FILL)	
3 - 5	S-2	X	6 - 15 - 17 - 22	20	32	3.0	GLACIAL DEPOSITS	Brown Poorly Graded Sand, Little Gravel, Moist, Dense (SP)	
5 - 7	S-3	X	8 - 14 - 15 - 16	14	29	5.0		As Above, No Gravel, Medium Dense (SP)	
7 - 9	S-4	X	13 - 14 - 20 - 28	16	34			Brown Silty Sand with Gravel, Dense (SM)	
10 - 10.9	S-5	X	21 - 50/5"	1	50/5"	10.0		Brown Poorly Graded Sand, Little Gravel, Moist, Very Dense (SP)	Cobble Piece in Spoon Shoe Rough Drilling 11.0 fbgs to 13.0 fbgs; Boulder Likely Water @ ~13.0 fbgs
15 - 17	S-6	X	9 - 10 - 10 - 10	4	20	15.0		As Above, Little Gravel, Wet, Medium Dense (SP)	
20 - 22	S-7	X	13 - 12 - 11 - 13	5	23	20.0		As Above (SP)	
						25.0			

NOTES: bgs = below ground surface, NA = Not Applicable, NE = Not Encountered, NS = Not Surveyed, P = Perched

RECORD OF SUBSURFACE EXPLORATION 22032_SBlogs 9/23/2024

WHITESTONE — RECORD OF SUBSURFACE EXPLORATION

Boring No.: SB-5 Page 2 of 2

Project:	Proposed Fire Station	**WAI Project No.:**	GJ2422032.Y00
Location:	63 – 69 West Ramapo Road & One Angelus Drive; Garnerville, Town of Haverstraw, Rockland County, NY	**Client:**	Thiells Roseville Fire Department

Surface Elevation:	± 404.0 feet	**Date Started:**	9/3/2024		**Water Depth (feet bgs) | Elevation (feet)**		**Cave-In Depth (feet bgs) | Elevation (feet)**
Termination Depth:	27.0 feet bgs	**Date Completed:**	9/3/2024	**During:**	13.0 | 391.0		
Proposed Location:	SMP	**Logged By:**	RN	**At Completion:**	12.0 | 392.0	**At Completion:**	13.0 | 391.0
Drill / Test Method:	HSA / SPT	**Contractor:**	GB	**24 Hours:**	--- | ---	**24 Hours:**	--- | ---
		Equipment:	Diedrich D50				

Depth (feet)	No	Type	Blows Per 6"	Rec. (in.)	N	DEPTH (feet)	STRATA	DESCRIPTION OF MATERIALS (Classification)	REMARKS
25 - 25.1	S-8	X	50/1"	1	50/1"	25.0 – 27.0	GLACIAL DEPOSITS	As Above, Some Gravel, Little Silt, Very Dense (SP)	
						27.0		Boring Log SB-5 Terminated at a Depth of 27.0 Feet Below Ground Surface Due to Auger Refusal	
						30.0			
						35.0			
						40.0			
						45.0			
						50.0			

NOTES: bgs = below ground surface, NA = Not Applicable, NE = Not Encountered, NS = Not Surveyed, P = Perched

RECORD OF SUBSURFACE EXPLORATION 22032_SBlogs 9/23/2024

WHITESTONE — RECORD OF SUBSURFACE EXPLORATION

Boring No.: SB-6 Page 1 of 1

Project:	Proposed Fire Station	**WAI Project No.:**	GJ2422032.Y00
Location:	63 – 69 West Ramapo Road & One Angelus Drive; Garnerville, Town of Haverstraw, Rockland County, NY	**Client:**	Thiells Roseville Fire Department

Surface Elevation:	± 408.0 feet	**Date Started:**	9/4/2024		**Water Depth (feet bgs) | Elevation (feet)**		**Cave-In Depth (feet bgs) | Elevation (feet)**
Termination Depth:	22.5 feet bgs	**Date Completed:**	9/4/2024	**During:**	15.0 | 393.0		
Proposed Location:	Pavement	**Logged By:**	RN	**At Completion:**	15.0 | 393.0	**At Completion:**	--- | ---
Drill / Test Method:	HSA / SPT	**Contractor:**	GB	**24 Hours:**	--- | ---	**24 Hours:**	--- | ---
		Equipment:	Diedrich D50				

Depth (feet)	No	Type	Blows Per 6"	Rec. (in.)	N	DEPTH (feet)	STRATA	DESCRIPTION OF MATERIALS (Classification)	REMARKS
						0.0 – 0.3	TOPSOIL	4" Topsoil	
0 - 2	S-1	X	4 - 7 - 7 - 6	22	14	0.3	FILL	Brown Sandy Silt, Moist (FILL)	
2 - 4	S-2	X	6 - 6 - 7 - 8	18	13			Brown Poorly Graded Sand, Little Gravel, Moist (FILL)	Reworked Natural
4 - 6	S-3	X	7 - 9 - 13 - 11	17	22	5.0		As Above, No Gravel (FILL)	
6 - 8	S-4	X	10 - 9 - 10 - 11	11	19			As Above (FILL)	
8 - 10	S-5	X	8 - 9 - 15 - 14	14	24			As Above (FILL)	
10 - 12	S-6	X	9 - 10 - 8 - 7	15	18	10.0	GLACIAL DEPOSITS	Brown Poorly Graded Sand, Moist, Medium Dense (SP)	
15 - 17	S-7	X	6 - 7 - 6 - 6	10	13	15.0		As Above (SP)	
20 - 22	S-8	X	28 - 12 - 13 - 14	20	25	20.0		Brown Poorly Graded Sand with Gravel, Wet, Medium Dense (SP)	
						22.5		Boring Log SB-6 Terminated at a Depth of 22.5 Feet Below Ground Surface Due to Auger Refusal	
						25.0			

NOTES: bgs = below ground surface, NA = Not Applicable, NE = Not Encountered, NS = Not Surveyed, P = Perched

RECORD OF SUBSURFACE EXPLORATION 22032_SBlogs 9/23/2024

WHITESTONE — RECORD OF SUBSURFACE EXPLORATION

Boring No.: SB-7 Page 1 of 2

Project:	Proposed Fire Station	**WAI Project No.:**	GJ2422032.Y00
Location:	63 – 69 West Ramapo Road & One Angelus Drive; Garnerville, Town of Haverstraw, Rockland County, NY	**Client:**	Thiells Roseville Fire Department

Surface Elevation:	± 412.0 feet	**Date Started:**	9/4/2024		**Water Depth (feet bgs) | Elevation (feet)**		**Cave-In Depth (feet bgs) | Elevation (feet)**
Termination Depth:	27.0 feet bgs	**Date Completed:**	9/4/2024	**During:**	20.0 | 392.0		
Proposed Location:	Pavement	**Logged By:**	RN	**At Completion:**	20.0 | 392.0	**At Completion:**	--- | ---
Drill / Test Method:	HSA / SPT	**Contractor:**	GB	**24 Hours:**	--- | ---	**24 Hours:**	--- | ---
		Equipment:	Diedrich D50				

Depth (feet)	No	Type	Blows Per 6"	Rec. (in.)	N	DEPTH (feet)	STRATA	DESCRIPTION OF MATERIALS (Classification)	REMARKS
						0.0	TOPSOIL	Topsoil	
0 - 2	S-1	X	4 - 5 - 6 - 6	1	11		FILL	Brown Poorly Graded Sand, Dry (FILL)	
2 - 4	S-2	X	4 - 4 - 3 - 4	2	7			As Above (FILL)	Reworked Natural
4 - 6	S-3	X	8 - 12 - 11 - 12	5	23	5.0		As Above, Little Gravel, Moist (FILL)	
6 - 8	S-4	X	5 - 5 - 7 - 6	16	12			As Above, No Gravel (FILL)	
8 - 10	S-5	X	3 - 4 - 5 - 9	24	9			As Above (FILL)	
10 - 12	S-6	X	6 - 6 - 8 - 9	21	14	10.0	GLACIAL DEPOSITS	Brown Poorly Graded Sand, Moist, Medium Dense (SP)	
15 - 17	S-7	X	5 - 7 - 7 - 8	20	14	15.0		As Above (SP)	
20 - 22	S-8	X	4 - 4 - 4 - 12	24	8	20.0		As Above, Wet, Loose (SP)	Water @ 20.0 fbgs
						21.5		Brown Silt, Little Gravel, Little Clay, Wet, Hard (ML)	Qu = 4.0 tsf
						25.0			

NOTES: bgs = below ground surface, NA = Not Applicable, NE = Not Encountered, NS = Not Surveyed, P = Perched

RECORD OF SUBSURFACE EXPLORATION 22032_SBlogs 9/23/2024

WHITESTONE — RECORD OF SUBSURFACE EXPLORATION

Boring No.: SB-7 Page 2 of 2

Project:	Proposed Fire Station	**WAI Project No.:**	GJ2422032.Y00
Location:	63 – 69 West Ramapo Road & One Angelus Drive; Garnerville, Town of Haverstraw, Rockland County, NY	**Client:**	Thiells Roseville Fire Department

Surface Elevation:	± 412.0 feet	**Date Started:**	9/4/2024		**Water Depth (feet bgs) | Elevation (feet)**		**Cave-In Depth (feet bgs) | Elevation (feet)**
Termination Depth:	27.0 feet bgs	**Date Completed:**	9/4/2024	**During:**	20.0 | 392.0		
Proposed Location:	Pavement	**Logged By:**	RN	**At Completion:**	20.0 | 392.0	**At Completion:**	--- | ---
Drill / Test Method:	HSA / SPT	**Contractor:**	GB	**24 Hours:**	--- | ---	**24 Hours:**	--- | ---
		Equipment:	Diedrich D50				

Depth (feet)	No	Type	Blows Per 6"	Rec. (in.)	N	DEPTH (feet)	STRATA	DESCRIPTION OF MATERIALS (Classification)	REMARKS
						25.0			
25 - 27	S-9	X	23 - 21 - 23 - 38	1	44		GLACIAL DEPOSITS	BrownPoorly Graded Sand with Gravel, Wet, Dense (SP)	
						27.0		Boring Log SB-7 Terminated at a Depth of 27.0 Feet Below Ground Surface	
						30.0			
						35.0			
						40.0			
						45.0			
						50.0			

NOTES: bgs = below ground surface, NA = Not Applicable, NE = Not Encountered, NS = Not Surveyed, P = Perched

RECORD OF SUBSURFACE EXPLORATION 22032_SBlogs 9/23/2024

NOTES:

1. FOR BORING LOCATION INFORMATION REFER TO SHEET BS100.00.
2. SUBSURFACE EXPLORATION WAS PERFORMED BY WHITESTONE ASSOCIATES ENGINEERING & GEOLOGY NY, PLLC. ON 9/3/24 & 9/4/24.

H2M architects + engineers

538 Broad Hollow Road, 4th Floor East
Melville, NY 11747
631.756.8000 ▪ www.h2m.com
NY Architecture & Landscape Architecture: No Certificate Required
NY Engineering Certificate of Authorization No. 0018178

CONSULTANTS:

MARK	DATE	DESCRIPTION

DESIGNED BY:	DRAWN BY:	CHECKED BY:	REVIEWED BY:

PROJECT No.:	DATE:	SCALE:
TRFD 2302	FEBRUARY 2025	AS SHOWN

CLIENT

THIELLS ROSEVILLE FIRE DISTRICT

NEW 26-100 FIRE HEADQUARTERS

65 W RAMAPO RD
GARNERVILLE, NY 10923

CONTRACT

ALL CONTRACTS

STATUS

FINAL BID DOCUMENT

SHEET TITLE

RECORD OF SUBSURFACE EXPLORATION (2 OF 2)

DRAWING No.

BS 102.00

\\h2m.com\shares\Projects\TRFD (Thiells Roseville Fire District)\TRFD2302 (New Fire Station)\02-BIM-CADD\Con-Docs\04 Geotech\BS102.00 - RECORD OF SUBSURFACE EXPLORATION (2 OF 2).dwg Last Modified: Oct 25, 2024 - 10:40am Plotted on: Feb 17, 2025 - 4:19pm By wspitz

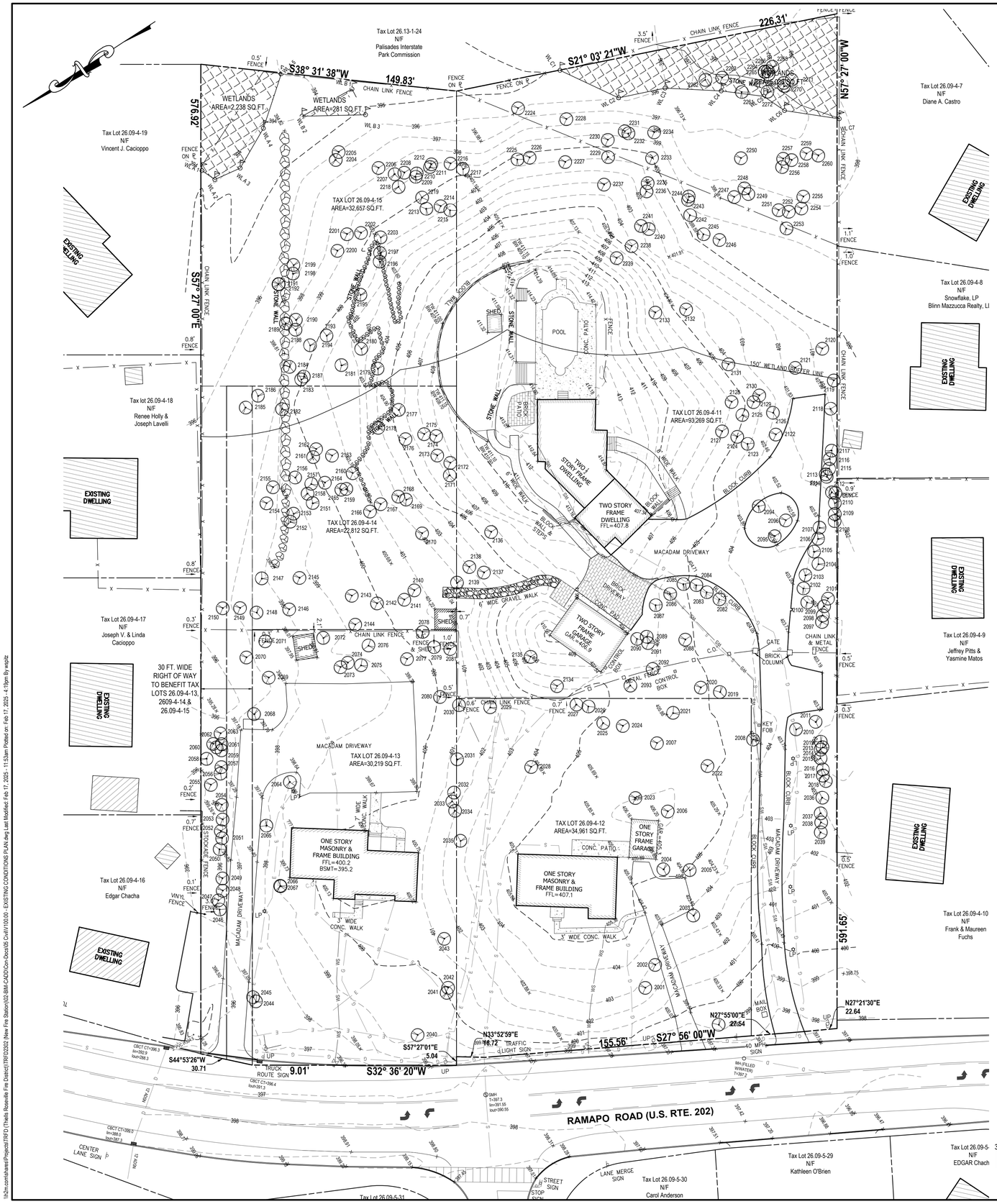

LEGEND

DESCRIPTION	SYMBOL
DRAINAGE MANHOLE	D
CATCH BASIN	
INLET	
INLET	
HYDRANT	
TEST BORE/TEST HOLE	
SANITARY MANHOLE	S
CLEAN OUT	
ELECTRIC MANHOLE	E
LIGHT	
PULL BOX	
UTILITY POLE/GUY POLE	
GUY WIRE	C
IRRIGATION CONTROL BOX	
SIGN	
MANHOLE	U
WETLAND MARKER	
DELINEATED WETLANDS	
DECIDUOUS TREE	

DESCRIPTION	SYMBOL
CURB	
DROP CURB	
STORM DRAIN	D D
WATER SERVICE	WS
WATER MAIN	W W
HOUSE CONNECTION	HC HC
SANITARY SEWER	S
UNDERGROUND GAS	G
UNDERGROUND ELECTRIC	E E
UNDERGROUND TELEPHONE	T T
OVERHEAD WIRES	O/H O/H
FENCE	X X
EDGE OF PAVEMENT	
CONTOUR	100
SPOT ELEVATION	100.0 x
TOP/BOT CURB GRADE	x tc 100.50 bc 100.00
CONCRETE PAVEMENT	
BRICK/PAVER PAVEMENT	
WALKWAY PAVEMENT	
GRAVEL WALKWAY	

EXISTING CONDITIONS NOTES:

1. EXISTING SURVEY PREPARED BY ATZL, NASHER & ZIGLER, P.C., DATED DECEMBER 19, 2023.
2. MARKOUT OF UNDERGROUND UTILITIES COMPLETED BY THE LEXIS GROUP, NOVEMBER 17, 2023.
3. WETLANDS FLAGGED BY BRUCE R. FRIEDMAN - SENIOR ENVIRONMENTAL SCIENTIST - ECOLOGICAL ANALYSIS, LLC, OCTOBER 18, 2023.
4. LOCATION OF UNDERGROUND UTILITIES AND STRUCTURES BOTH PUBLIC AND CUSTOMER OWNED, WERE OBTAINED FROM EITHER OLD MAPS, SURVEYS, DRAWINGS/RECORDS SUPPLIED BY OTHERS AND/OR UTILITY MARKOUT. THE OWNER AND ENGINEER DO NOT GUARANTEE OR ACCEPT RESPONSIBILITY FOR ANY DAMAGE TO SUCH FACILITIES DUE TO DISCREPANCIES IN LOCATION AND SIZE SHOWN ON THE PLANS OR THOSE UTILITIES AND STRUCTURES NOT SHOWN.

UTILITY NOTES:

SUBSURFACE UTILITY ENGINEERING (SUE) QUALITY LEVELS OF SERVICE (ACCURACY)
ALL MARKOUT IS QUALITY LEVEL B UNLESS OTHERWISE NOTED.

QL-A = QUALITY LEVEL A (TEST HOLES)
DATA TYPICALLY ACQUIRED AT ONE POINT ON AN UNDERGROUND UTILITY FEATURE EXPOSED BY AIR VACUUM EXCAVATION OR OTHER MEANS. THE HORIZONTAL AND VERTICAL LOCATION OF THIS REFERENCE POINT IS ACQUIRED AND REPORTED TO ACCEPTABLE SURVEY TOLERANCES. THE ACQUIRED DATA FULFILLS SECTION 5.4.5 ON PAGE 6 OF ASCE STANDARD 38-02.

QL-B = QUALITY LEVEL B (UTILITY DESIGNATION)
DEPICTION OF AN UNDERGROUND UTILITY LINE ESTABLISHED BY SENSING THE LOCATION WITH ELECTRONIC INSTRUMENTATION. LINEWORK AND UTILITY SURFACE FEATURES ARE ACQUIRED BY SURVEYING POINTS ALONG ALIGNMENT TO ACCEPTABLE SURVEY TOLERANCES.

QL-C = QUALITY LEVEL C (RECORDS PLOTTING)
UTILITY INFORMATION OBTAINED FROM RECORD INFORMATION AND PLOTTED TO CORRELATE WITH SURFACE UTILITY FEATURES WHICH HAVE BEEN SURVEY LOCATED AND ACCURATELY REDUCED ON TO DESIGN/CONSTRUCTION DOCUMENTS.

QL-D = QUALITY LEVEL D (RECORDS DRAFTING)
DEPICTION OF UNDERGROUND UTILITY LINES BY TRANSPOSITION FROM UTILITY RECORDS OR PLACED FROM VERBAL RECOLLECTIONS WITHOUT BENEFIT OF SURVEYED SURFACE FEATURES. ACCURACY OF INFORMATION IS QUESTIONABLE.

EOI
END OF INFORMATION PERTAINS TO THE LOSS OF RECORD SIGNAL THAT HAS BEEN APPLIED TO AN UNDERGROUND UTILITY AND THEN DETECTED TO ELECTRONICALLY LOCATE THE UTILITY. COMMONLY FOUND WHERE UTILITIES CHANGE TO NON-CONDUCTIVE MATERIALS, ARE CUT OR AT END OF UTILITY.

H2M architects + engineers
538 Broad Hollow Road, 4th Floor East
Melville, NY 11747
631.756.8000 • www.h2m.com
NY Architecture & Landscape Architecture: No Certificate Required
NY Engineering Certificate of Authorization No. 0018178

CONSULTANTS:

MARK	DATE	DESCRIPTION

STATE OF NEW YORK · DANIELLE A. DRAKE · 092596 · LICENSED PROFESSIONAL ENGINEER

Danielle Drake 08/31/2027
DANIELLE A. DRAKE, P.E. DATE
NY PROFESSIONAL ENGINEER Lic. No. 092596
"IN ACCORDANCE WITH ARTICLE 145, SECTION 7209 OF THE NYS EDUCATION LAW, ALTERATION OF THIS DOCUMENT EXCEPT BY LICENSE PROFESSIONAL IS ILLEGAL"

DESIGNED BY:	DRAWN BY:	CHECKED BY:	REVIEWED BY:
WHS	WHS	DAD	MRM
PROJECT No.	DATE:	SCALE:	
TRFD 2302	FEBRUARY 2025	AS SHOWN	

CLIENT
THIELLS ROSEVILLE FIRE DISTRICT

NEW 26-100 FIRE HEADQUARTERS

THIELLS 26 FD

65 W RAMAPO RD
GARNERVILLE, NY 10923

CONTRACT
ALL CONTRACTS

STATUS
FINAL BID DOCUMENT

SHEET TITLE
EXISTING CONDITIONS PLAN

DRAWING No.
V 100.00

\\h2m.com\shares\Projects\TRFD (Thiells Roseville Fire District)\TRFD2302 New Fire Station\02.BIM-CADD\Civil\Civil Docs\05 Civil\V100.00 - EXISTING CONDITIONS PLAN.dwg | last Modified: Feb 17, 2025 - 11:53am | Plotted on: Feb 17, 2025 - 4:19pm | By: wmz

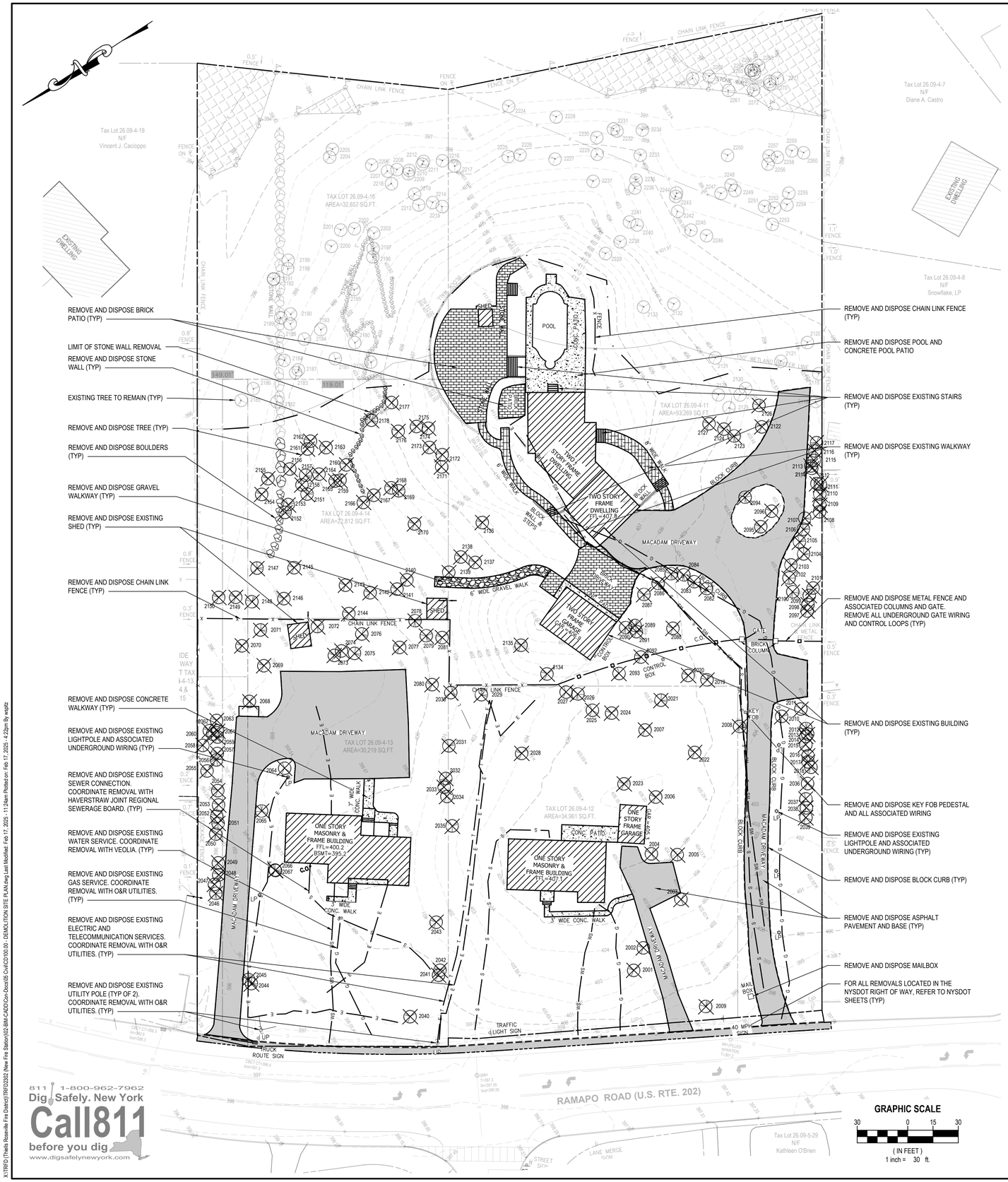

SITE DEMOLITION NOTES:

1. REPORT ANY DISCREPANCIES BETWEEN ACTUAL FIELD CONDITIONS AND THE PLANS TO THE ENGINEER IN WRITING IMMEDIATELY.
2. UNDERGROUND UTILITY INFORMATION SHOWN ON THESE PLANS WAS OBTAINED FOR DESIGN PURPOSES ONLY. PROVIDE FOR CONSTRUCTION MARKOUT AND LOCATE EXISTING UNDERGROUND UTILITIES. NO EXCAVATION CAN COMMENCE UNTIL UTILITY DOCUMENTATION HAS BEEN COMPLETED.
3. AFTER MARKOUT AND PRIOR TO DISTURBING THE SITE, UNCOVER ALL SUBSURFACE UTILITIES AND STRUCTURES WITHIN LIMITS OF DISTURBANCE TO CONFIRM THEIR LOCATION AND DEPTH.
4. NO COMPENSATION WILL BE MADE FOR ANY INCONVENIENCE CAUSED BY ENCOUNTERING UTILITIES AND STRUCTURES WHICH ARE NOT SHOWN, OR ARE INACCURATELY SHOWN ON THE PLANS.
5. REPAIR ANY DAMAGE TO EXISTING UTILITIES RESULTING FROM CONTRACTOR OPERATIONS IMMEDIATELY AT NO COST TO OWNER.
6. REPAIR ANY DAMAGE TO EXISTING SITE FEATURES SCHEDULED TO REMAIN RESULTING FROM CONTRACTOR OPERATIONS AT NO COST TO OWNER.
7. SAWCUT CONCRETE PAVEMENT BACK TO NEAREST EXPANSION/CONTROL JOINT.
8. PROVIDE TEMPORARY FENCING TO PROTECT WORK AREAS.
9. INSTALL EROSION CONTROL MEASURES AS SHOWN ON THE EROSION AND SEDIMENT CONTROL PLAN PRIOR TO ANY GROUND DISTURBANCE.
10. DELINEATE THE LIMITS OF CLEARING AND REVIEW WITH THE OWNER PRIOR TO COMMENCING WORK.
11. NOTIFY OWNER AND ENGINEER IMMEDIATELY IN WRITING WHEN UNKNOWN STRUCTURES OR SUSPECTED HAZARDOUS OR CONTAMINATED MATERIALS ARE ENCOUNTERED PRIOR TO REMOVAL OR DISTURBANCE.
12. TAKE APPROPRIATE MEASURES TO PROTECT PEDESTRIANS AND VEHICULAR TRAFFIC DURING REMOVAL ACTIVITIES, AND PROVIDE TEMPORARY MEASURES FOR THE PROTECTION AND SAFETY OF THE PUBLIC UNTIL FINAL ACCEPTANCE BY THE OWNER.
13. BACKFILL ALL VOIDS RESULTING FROM THE REMOVAL OF EXISTING SITE FEATURES. BACKFILL TO BE SOIL, FREE OF ORGANIC MATERIAL, DEBRIS, TRASH, CLAY AND STONES LARGER THAN 4 INCHES.
14. FOR TREE REMOVAL INFORMATION, SEE SHEET CD101.00.
15. THE CONTRACTOR IS REQUIRED TO OBTAIN ALL NECESSARY PERMITS & PERFORM UTILITY DISCONNECTS PRIOR TO DEMOLISHING EXISTING BUILDINGS ON THE SITE, WHERE APPLICABLE.
16. IN ORDER TO CONSTRUCT THE NEW STRUCTURES AND FEATURES PROPOSED WITH THIS PROJECT, EXISTING ABOVE GRADE AND BELOW GRADE STRUCTURES WILL NEED TO BE REMOVED AND DISPOSED OF PRIOR TO PROCEEDING WITH THE DEVELOPMENT OF THE SITE. THE SOLE PURPOSE OF THIS PLAN IS TO PROVIDE GENERAL INFORMATION REGARDING EXISTING STRUCTURES AND INFRASTRUCTURE CONTEMPLATED FOR REMOVAL IN CONJUNCTION WITH THE PROPOSED WORK. THIS PLAN IS INTENDED TO SERVE AS A COORDINATION DOCUMENT TO FACILITATE EFFORTS BY THE OWNER AND CONTRACTOR TO ASSESS EXISTING SITE CONDITIONS AND DETERMINE THE SCOPE OF WORK REQUIRED IN CONNECTION WITH PREPARING THE SITE FOR CONSTRUCTION. IN ADDITION, THE PLAN CAN BE UTILIZED TO SUPPORT APPLICATIONS TO REGULATORY AGENCIES AND UTILITY COMPANIES IN CONNECTION WITH ABANDONMENTS AND DISCONNECTS. THIS PLAN IS NOT INTENDED TO BE ALL INCLUSIVE OF THE WORK REQUIRED TO PREPARE THE SITE FOR CONSTRUCTION.
17. THE CONTRACTOR IS REQUIRED TO OBTAIN A HIGHWAY WORK PERMIT FROM NYSDOT FOR ALL WORK IN THE US-202 (RAMAPO RD) RIGHT-OF-WAY.

LEGEND

DESCRIPTION	SYMBOL
REMOVE AND DISPOSE EXISTING TREE	
REMOVE AND DISPOSE OF EXISTING CURB	
SAWCUT PAVEMENT LINE	
REMOVE AND DISPOSE EXISTING ASPHALT PAVEMENT AND BASE	
REMOVE AND DISPOSE EXISTING CONCRETE SIDEWALK	
REMOVE AND DISPOSE EXISTING BRICK DRIVEWAY / PATIO	
REMOVE AND DISPOSE EXISTING GRAVEL WALKWAY	
REMOVE AND DISPOSE EXISTING STONE PAVER WALKWAY	
REMOVE AND DISPOSE EXISTING BUILDING	
REMOVE AND DISPOSE OF EXISTING CHAIN LINK FENCE	X X
REMOVE AND DISPOSE OF EXISTING METAL FENCE	
REMOVE AND DISPOSE OF EXISTING DRAINAGE INLET / CATCH BASIN	
REMOVE AND DISPOSE OF EXISTING SANITARY LINE	S S
REMOVE AND DISPOSE OF EXISTING DRAINAGE LINE	D D
REMOVE AND DISPOSE OF EXISTING GAS LINE	G G
REMOVE AND DISPOSE OF EXISTING ELECTRIC LINE	E E
REMOVE AND DISPOSE OF EXISTING TELECOM LINE	T T
REMOVE AND DISPOSE OF EXIST. WATER SERVICE LINE	WS WS
LIMIT OF DISTURBANCE LINE	

GRAPHIC SCALE
30 0 15 30
(IN FEET)
1 inch = 30 ft.

H2M architects + engineers
538 Broad Hollow Road, 4th Floor East
Melville, NY 11747
631.756.8000 • www.h2m.com
NY Architecture & Landscape Architecture: No Certificate Required
NY Engineering Certificate of Authorization No. 0018178

CONSULTANTS:

MARK	DATE	DESCRIPTION

STATE OF NEW YORK · DANIELLE A. DRAKE · 092596 · LICENSED PROFESSIONAL ENGINEER

Danielle Drake 08/31/2027
DANIELLE A. DRAKE, P.E. DATE
NY PROFESSIONAL ENGINEER Lic. No. 092596
"IN ACCORDANCE WITH ARTICLE 145, SECTION 7209 OF THE NYS EDUCATION LAW, ALTERATION OF THIS DOCUMENT EXCEPT BY LICENSE PROFESSIONAL IS ILLEGAL"

DESIGNED BY:	DRAWN BY:	CHECKED BY:	REVIEWED BY:
WHS	WHS	DAD	MRM
PROJECT No.: TRFD 2302	DATE: FEBRUARY 2025	SCALE: AS SHOWN	

CLIENT
THIELLS ROSEVILLE FIRE DISTRICT

NEW 26-100 FIRE HEADQUARTERS

THIELLS 26 FD

65 W RAMAPO RD GARNERVILLE, NY 10923

CONTRACT
CONTRACT C CIVIL CONSTRUCTION

STATUS
FINAL BID DOCUMENT

SHEET TITLE
DEMOLITION SITE PLAN

DRAWING No.
CD 100.00

X:\TRFD\Thiells Roseville Fire District\TRFD2302 (New Fire Station)\02-BIM-CADD\Civil\Dwgs\05 Civil\CD100.00 - DEMOLITION SITE PLAN.dwg Last Modified: Feb 17, 2025 - 11:24am Plotted on: Feb 17, 2025 - 4:22pm By: wsolz

EXISTING TREES

Tree No.	Caliper (in)	To Remain	Remove
2001	30"		X
2002	16"		X
2003	16"		X
2004	12"		X
2005	24"		X
2006	24"		X
2007	29"		X
2008	48"		X
2009	10"		X
2010	15"		X
2011	10"		X
2012	6"		X
2013	8"		X
2014	6"		X
2015	12"		X
2016	14"		X
2017	12"		X
2018	12"		X
2019	10"		X
2020	10"		X
2021	10"		X
2022	10"		X
2023	18"		X
2024	10"		X
2025	8"		X
2026	8"		X
2027	8"		X
2028	10"		X
2029	24"		X
2030	24"		X
2031	26"		X
2032	8"		X
2033	6"		X
2034	26"		X
2035	28"		X
2036	10"		X
2037	8"		X
2038	12"		X
2039	10"		X
2040	6"		X
2041	36"		X
2042	24"		X
2043	84"		X
2044	28"		X
2045	30"		X
2046	30"		X
2047	10"		X
2048	12"		X
2049	14"		X
2050	10"		X
2051	6"		X
2052	12"		X
2053	10"		X
2054	15"		X
2055	15"		X
2056	8"		X
2057	24"		X
2058	12"		X
2059	12"		X
2060	8"		X
2061	10"		X
2062	24"		X
2063	10"		X
2064	28"		X
2065	20"		X
2066	20"		X
2067	20"		X
2068	24"		X
2069	28"		X
2070	24"		X
2071	12"		X
2072	26"		X
2073	12"		X
2074	12"		X
2075	12"		X
2076	25"		X
2077	12"		X
2078	26"		X
2079	26"		X
2080	8"		X
2081	10"		X
2082	24"		X
2083	12"		X
2084	20"		X
2085	18"		X
2086	20"		X
2087	18"		X
2088	12"		X
2089	6"		X
2090	12"		X
2091	12"		X
2092	12"		X
2093	12"		X
2094	24"		X
2095	10"		X
2096	10"		X
2097	24"		X
2098	20"		X
2099	15"		X
2100	15"		X
2101	15"		X
2102	15"		X
2103	15"		X
2104	15"		X
2105	15"		X
2106	12"		X

EXISTING TREES

Tree No.	Caliper (in)	To Remain	Remove
2107	6"		X
2108	12"		X
2109	15"		X
2110	15"		X
2111	12"		X
2112	10"		X
2113	10"		X
2114	6"		X
2115	8"		X
2116	10"		X
2117	10"		X
2118	6"	X	
2119	20"	X	
2120	24"	X	
2121	26"	X	
2122	30"		X
2123	20"		X
2124	20"		X
2125	20"	X	
2126	6"		X
2127	24"		X
2128	10"	X	
2129	24"	X	
2130	24"	X	
2131	30"	X	
2132	26"	X	
2133	30"	X	
2134	28"		X
2135	30"		X
2136	30"		X
2137	25"		X
2138	30"		X
2139	24"		X
2140	24"		X
2141	10"		X
2142	10"		X
2143	12"		X
2144	36"		X
2145	10"		X
2146	20"		X
2147	10"		X
2148	30"		X
2149	30"		X
2150	26"		X
2151	12"		X
2152	24"		X
2153	20"		X
2154	20"		X
2155	20"		X
2156	24"		X
2157	24"		X
2158	15"		X
2159	15"		X
2160	20"		X
2161	20"		X
2162	15"		X
2163	22"		X
2164	20"		X
2165	20"		X
2166	20"		X
2167	20"		X
2168	26"		X
2169	6"		X
2170	26"		X
2171	24"		X
2172	24"		X
2173	20"		X
2174	24"		X
2175	24"		X
2176	20"		X
2177	26"		X
2178	20"		X
2179	10"	X	
2180	15"	X	
2181	30"	X	
2182	24"	X	
2183	24"	X	
2184	24"	X	
2185	20"	X	
2186	28"	X	
2187	12"	X	
2188	22"	X	
2189	22"	X	
2190	12"	X	
2191	26"	X	
2192	36"	X	
2193	15"	X	
2194	6"	X	
2195	20"	X	
2196	20"	X	
2197	10"	X	
2198	18"	X	
2199	26"	X	
2200	24"	X	
2201	24"	X	
2202	24"	X	
2203	20"	X	
2204	15"	X	
2205	8"	X	
2206	15"	X	
2207	15"	X	
2208	15"	X	
2209	20"	X	
2210	22"	X	
2211	22"	X	
2212	18"	X	

EXISTING TREES

Tree No.	Caliper (in)	To Remain	Remove
2213	18"	X	
2214	25"	X	
2215	18'	X	
2216	18"	X	
2217	18"	X	
2218	18"	X	
2219	18"	X	
2224	20"	X	
2225	18"	X	
2226	6"	X	
2227	20"	X	
2228	30"	X	
2229	28"	X	
2230	24"	X	
2231	26"	X	
2232	26"	X	
2233	20"	X	
2234	24"	X	
2235	10"	X	
2236	10"	X	
2237	15"	X	
2238	18"	X	
2239	18"	X	
2240	10"	X	
2241	10"	X	
2242	18"	X	
2243	18"	X	
2244	8"	X	
2245	18"	X	
2246	20"	X	
2247	12"	X	
2248	15"	X	
2249	8"	X	
2250	20"	X	
2251	18"	X	
2252	24"	X	
2253	24"	X	
2254	24"	X	
2255	15"	X	
2256	26"	X	
2257	26"	X	
2258	15"	X	
2259	25"	X	
2260	28"	X	
2261	18"	X	
2262	30"	X	
2263	20"	X	
2264	10"	X	
2265	15"	X	
2266	15"	X	
2267	18"	X	
2268	15"	X	
2269	18"	X	
2270	10"	X	
2271	15"	X	
2272	13"	X	

LEGEND

DESCRIPTION	SYMBOL
REMOVE AND DISPOSE EXISTING TREE	2000

H2M architects + engineers

538 Broad Hollow Road, 4th Floor East
Melville, NY 11747
631.756.8000 • www.h2m.com
NY Architecture & Landscape Architecture: No Certificate Required
NY Engineering Certificate of Authorization No. 0018178

CONSULTANTS:

MARK	DATE	DESCRIPTION

STATE OF NEW YORK · DANIELLE A. DRAKE · 092596 · LICENSED PROFESSIONAL ENGINEER

Danielle Drake 08/31/2027
DATE

DANIELLE A. DRAKE, P.E.
NY PROFESSIONAL ENGINEER Lic. No. 092596

"IN ACCORDANCE WITH ARTICLE 145, SECTION 7209 OF THE NYS EDUCATION LAW, ALTERATION OF THIS DOCUMENT EXCEPT BY LICENSE PROFESSIONAL IS ILLEGAL"

DESIGNED BY:	DRAWN BY:	CHECKED BY:	REVIEWED BY:
WHS	WHS	DAD	MRM

PROJECT No.:	DATE:	SCALE:
TRFD 2302	FEBRUARY 2025	AS SHOWN

CLIENT

THIELLS ROSEVILLE FIRE DISTRICT

NEW 26-100 FIRE HEADQUARTERS

THIELLS 26 FD

65 W RAMAPO RD
GARNERVILLE, NY 10923

CONTRACT

CONTRACT C
CIVIL CONSTRUCTION

STATUS

FINAL BID DOCUMENT

SHEET TITLE

TREE REMOVAL SITE PLAN

DRAWING No.

CD 101.00

X:\TRFD\Thiells Roseville Fire District\TRFD2302 (New Fire Station)\02-BIM-CADD\Civil\D101.00 - TREE REMOVAL SITE PLAN.dwg Last Modified: Jan 02, 2025 - 9:23am Plotted on: Feb 17, 2025 - 4:22pm By: wshr

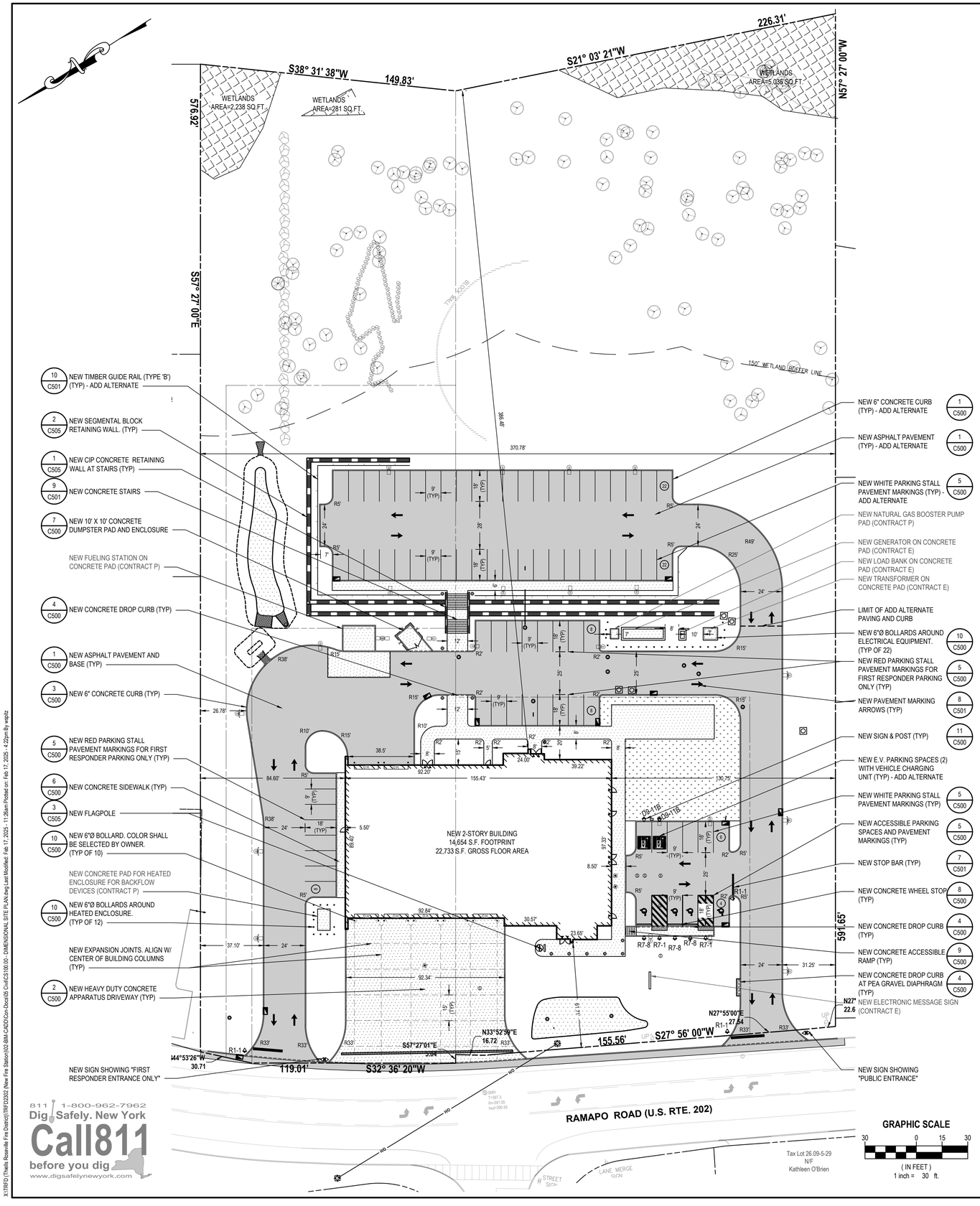

811 1-800-962-7962
Dig Safely. New York
Call811
before you dig
www.digsafelynewyork.com

X:\TRFD (Thiells Roseville Fire District)\TRFD2302 (New Fire Station)\02-BIM-CADD\Civil\Dwg\05 Civil\CS100.00_DIMENSIONAL SITE PLAN.dwg Last Modified: Feb 17, 2025 - 11:26am Plotted on: Feb 17, 2025 - 4:22pm By: whs2fc

SIGN LEGEND

DESCRIPTION	SYMBOL
R1-1 (24" x 24")	STOP
R7-8 (12x18)	RESERVED PARKING
R7-1 (12"x18")	NO PARKING ANY TIME
D9-11B (24"x24")	EV
(18"x36")	FIRST RESPONDER ENTRANCE ONLY
(18"x36")	PUBLIC ENTRANCE

LEGEND

DESCRIPTION	SYMBOL
CURB	
RETAINING WALL	
CONCRETE DROP CURB	
ASPHALT PAVEMENT	
CONCRETE PAVEMENT SIDEWALK	
OUTDOOR WELLNESS AREA	
FLAGGED WETLAND AREA	
SIGN	
DOOR	
OVERHEAD DOOR	OH
UTILITY MANHOLE	S D E T U
CLEAN OUT	
CATCH BASIN	
YARD INLET	
BOLLARD	
PARKING STALL COUNT	12
LIGHT POLE	
LIGHTED BOLLARD	
TRAFFIC SIGNAL POLE	
OVERHEAD UTILITIES LINE	O/H O/H
TIMBER GUIDE RAIL	

SITE DATA

RCTM: 26.09-4-11,12,13,14,15
ZONE: R15 - MEDIUM DENSITY RESIDENCE DISTRICT / ROUTE 202 FLOATING OVERLAY DISTRICT
PROPOSED USE: FIRE STATION
SITE AREA: 213,918 SF / 4.91 ACRES

BULK REQUIREMENTS (ROUTE 202 FLOATING OVERLAY ZONE)

ITEM	REQUIRED	NEW
MINIMUM LOT AREA	1.00 ACRES	4.91 ACRES
MINIMUM LOT WIDTH	150.00 FT	370.78 FT
MINIMUM LOT FRONTAGE	150.00 FT	377.22 FT
MINIMUM FRONT YARD DEPTH	25.00 FT	61.71 FT
MINIMUM SIDE YARD WIDTH	20.00 FT	84.60 FT
MINIMUM TOTAL SIDE YARD	40.00 FT	215.35 FT
MINIMUM REAR YARD DEPTH	40.00 FT	386.48 FT
MAXIMUM BUILDING HEIGHT	28 FT / 2 STORIES	28 FT / 2 STORIES
MAXIMUM F.A.R.	0.35	0.11
MAXIMUM BUILDING COVERAGE	20%	7%
MAXIMUM TOTAL LOT COVERAGE	60%	36%
MINIMUM LANDSCAPED AREA	15%	64%
MINIMUM BUFFER ZONE WIDTH	20.00 FT	26.78 FT

PARKING CALCULATIONS

REQUIRED PARKING:
NEW FIRE STATION:
OFFICE & PUBLIC BUILDING: 22,733 SF @ 1 SPACE / 150 SF = 152 SPACES
TOTAL REQUIRED PARKING: 152 SPACES

PARKING PROVIDED:
FIRST RESPONDER PARKING: 24 SPACES
PUBLIC PARKING: 54 SPACES
TOTAL SPACES PROVIDED: 78 SPACES*

*INCLUDING 4 ACCESSIBLE SPACES

SITE PLAN NOTES:

1. INSPECT THE SITE PRIOR TO SUBMISSION OF BIDS AND MAKE NO ADDITIONAL CLAIMS REGARDING SITE CONDITIONS THEREAFTER.
2. NOTIFY THE OWNER AND H2M (TELEPHONE 631-756-8000) AT LEAST 48 HOURS PRIOR TO THE COMMENCEMENT OF THE WORK. THE SAME NOTICE SHALL BE REQUIRED WHEN RESUMING WORK AFTER ANY STOPPAGE OR DELAY.
3. COMPLETE ALL SURVEY AND STAKEOUT AS REQUIRED TO PROPERLY COMPLETE THE WORK.
4. PERFORM DAILY CLEANUP OPERATIONS INCLUDING REMOVAL OF DEBRIS AND EXCESS CONSTRUCTION MATERIAL, AND DRIVEWAY/STREET CLEANING TO THE SATISFACTION OF THE OWNER.
5. DURING ALL NON-WORKING HOURS, STORE ALL EQUIPMENT AND MATERIALS WITHIN AN AREA DESIGNATED BY THE OWNER AT THE PROJECT SITE.
6. ALL CURB DIMENSIONS SHOWN REFER TO THE FACE OF CURB.
7. ALL CONSTRUCTION TO CONFORM WITH ALL APPLICABLE FEDERAL, STATE AND LOCAL CODE REQUIREMENTS.
8. COORDINATE CONSTRUCTION ACTIVITIES WITH OWNER TO MINIMIZE INTERRUPTION TO THE OWNER'S OPERATIONS.
9. RESTORE SURROUNDING AREAS DAMAGED OR DISTURBED DURING CONSTRUCTION. RESTORE TO NEW CONDITIONS AT NO ADDITIONAL COST TO THE OWNER.
10. RESTORE ALL DISTURBED GRASS AREAS AND ALL AREAS NOT SPECIFICALLY IDENTIFIED FOR OTHER IMPROVEMENTS WITH 4 INCHES OF TOPSOIL AND SEED.
11. REMOVE ALL ASPHALT FROM EXISTING CASTINGS.
12. SEAL ALL JOINTS BETWEEN NEW ASPHALT AND EXISTING ASPHALT WITH HOT ASPHALT CEMENT.
13. ARCHITECTURAL AND STRUCTURAL DRAWINGS SHALL BE USED IN CONJUNCTION WITH THE CIVIL DRAWINGS FOR THE LAYOUT AND CONSTRUCTION OF BUILDING FOUNDATIONS AND OTHER BUILDING ELEMENTS. REPORT ANY DISCREPANCIES BETWEEN CIVIL, ARCHITECTURAL, AND STRUCTURAL DRAWINGS IN WRITING TO THE CIVIL ENGINEER PRIOR TO CONSTRUCTING BUILDING FOUNDATIONS AND/OR OTHER BUILDING ELEMENTS.

H2M architects + engineers
538 Broad Hollow Road, 4th Floor East
Melville, NY 11747
631.756.8000 • www.h2m.com
NY Architecture & Landscape Architecture: No Certificate Required
NY Engineering Certificate of Authorization No. 0018178

CONSULTANTS:

MARK	DATE	DESCRIPTION

STATE OF NEW YORK • DANIELLE A. DRAKE • 092596 • LICENSED PROFESSIONAL ENGINEER

Danielle Drake 08/31/2027
DATE

DANIELLE A. DRAKE, P.E.
NY PROFESSIONAL ENGINEER Lic. No. 092596

"IN ACCORDANCE WITH ARTICLE 145, SECTION 7209 OF THE NYS EDUCATION LAW, ALTERATION OF THIS DOCUMENT EXCEPT BY LICENSE PROFESSIONAL IS ILLEGAL"

DESIGNED BY:	DRAWN BY:	CHECKED BY:	REVIEWED BY:
WHS	WHS	DAD	MRM

PROJECT No.:	DATE:	SCALE:
TRFD 2302	FEBRUARY 2025	AS SHOWN

CLIENT
THIELLS ROSEVILLE FIRE DISTRICT

NEW 26-100 FIRE HEADQUARTERS

THIELLS 26 FD

65 W RAMAPO RD
GARNERVILLE, NY 10923

CONTRACT
CONTRACT C
CIVIL CONSTRUCTION

STATUS
FINAL BID DOCUMENT

SHEET TITLE
DIMENSIONAL SITE PLAN

DRAWING No.
CS 100.00

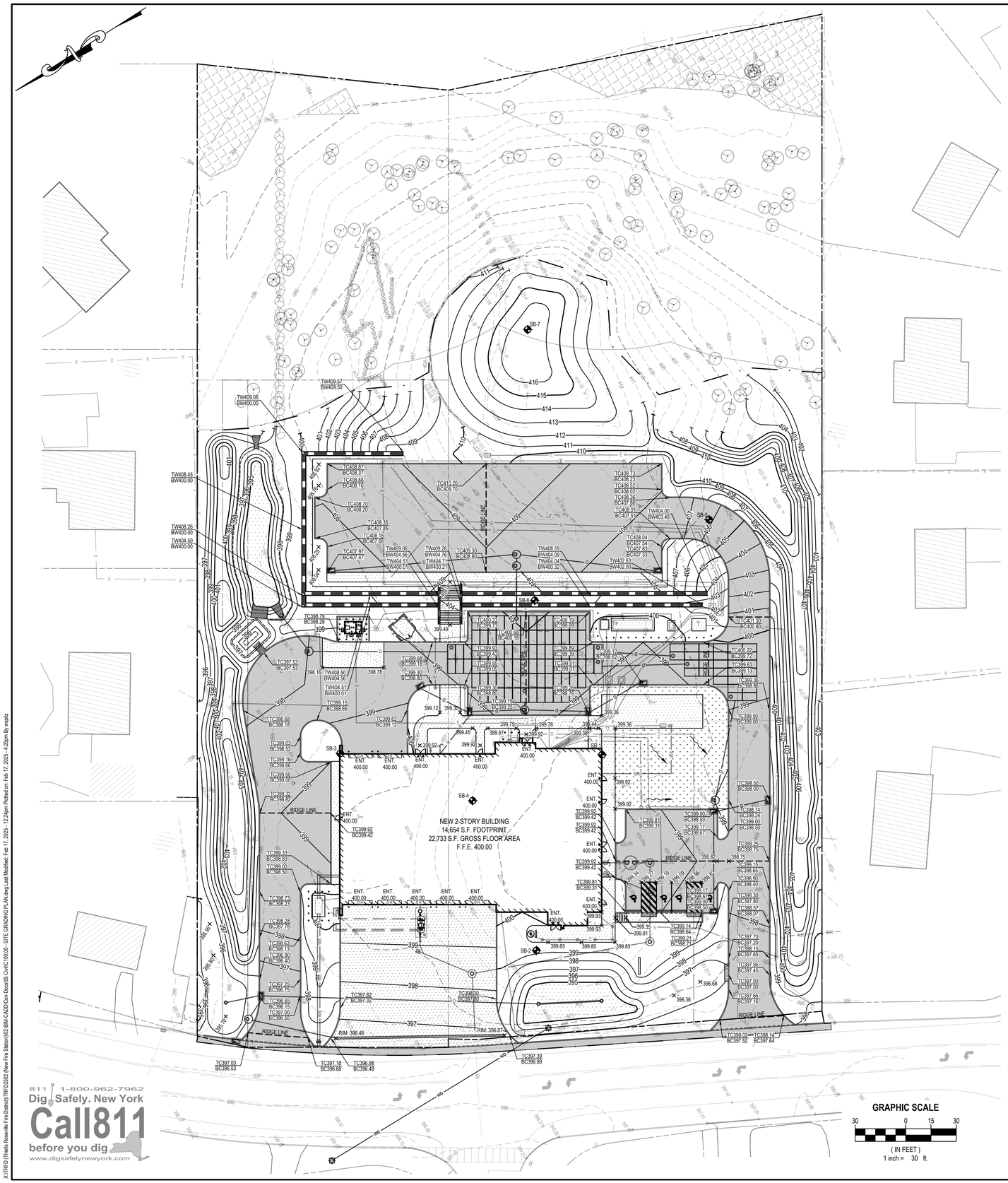

LEGEND

DESCRIPTION	SYMBOL
SPOT ELEVATION	×121.50
TOP AND BOTTOM CURB ELEVATION	TC140.00 / BC139.50
MAJOR CONTOUR	240
MINOR CONTOUR	241
BORING / TEST HOLE LOCATION	
RIDGE LINE	
RETAINING WALL	
CATCH BASIN	
YARD INLET	
SANITARY SEPTIC TANK / GREASE TRAP	
SANITARY CLEAN OUT	
SANITARY MANHOLE	
LIGHT POLE	
LIGHTED BOLLARD	
UTILITY POLE/GUY POLE	
TRAFFIC SIGNAL POLE	
FLOW ARROW	
GAS LINE	G
SANITARY LINE	S
DRAINAGE LINE	D
ELECTRIC LINE	E
ROOF LEADER LINE	R
FIRE SERVICE LINE	FS
WATER SERVICE LINE	WS
OVERHEAD UTILITIES LINE	OH
LIMIT OF DISTURBANCE LINE	

NOTES:

1. SEE GRADING AND DRAINAGE NOTES ON C110.00.

GRAPHIC SCALE

30 0 15 30

(IN FEET)
1 inch = 30 ft.

H2M architects + engineers

538 Broad Hollow Road, 4th Floor East
Melville, NY 11747
631.756.8000 • www.h2m.com
NY Architecture & Landscape Architecture: No Certificate Required
NY Engineering Certificate of Authorization No. 0018178

CONSULTANTS:

MARK	DATE	DESCRIPTION

STATE OF NEW YORK · DANIELLE A. DRAKE · 092596 · LICENSED PROFESSIONAL ENGINEER

DANIELLE A. DRAKE, P.E.
NY PROFESSIONAL ENGINEER Lic. No. 092596

08/31/2027
DATE

"IN ACCORDANCE WITH ARTICLE 145, SECTION 7209 OF THE NYS EDUCATION LAW, ALTERATION OF THIS DOCUMENT EXCEPT BY LICENSE PROFESSIONAL IS ILLEGAL"

DESIGNED BY:	DRAWN BY:	CHECKED BY:	REVIEWED BY:
WHS	WHS	DAD	MRM

PROJECT No.:	DATE:	SCALE:
TRFD 2302	FEBRUARY 2025	AS SHOWN

CLIENT

THIELLS ROSEVILLE FIRE DISTRICT

NEW 26-100 FIRE HEADQUARTERS

THIELLS 26 FD

65 W RAMAPO RD
GARNERVILLE, NY 10923

CONTRACT

CONTRACT C
CIVIL CONSTRUCTION

STATUS

FINAL BID DOCUMENT

SHEET TITLE

SITE GRADING PLAN

DRAWING No.

C 100.00

X:\TRFD\Thiells Roseville Fire District\TRFD2302 (New Fire Station)\02-BIM-CADD\Civil\Docs\05 Civil\C100.00 - SITE GRADING PLAN.dwg Last Modified: Feb 17, 2025 - 12:24pm Plotted on: Feb 17, 2025 - 4:20pm By wsotz

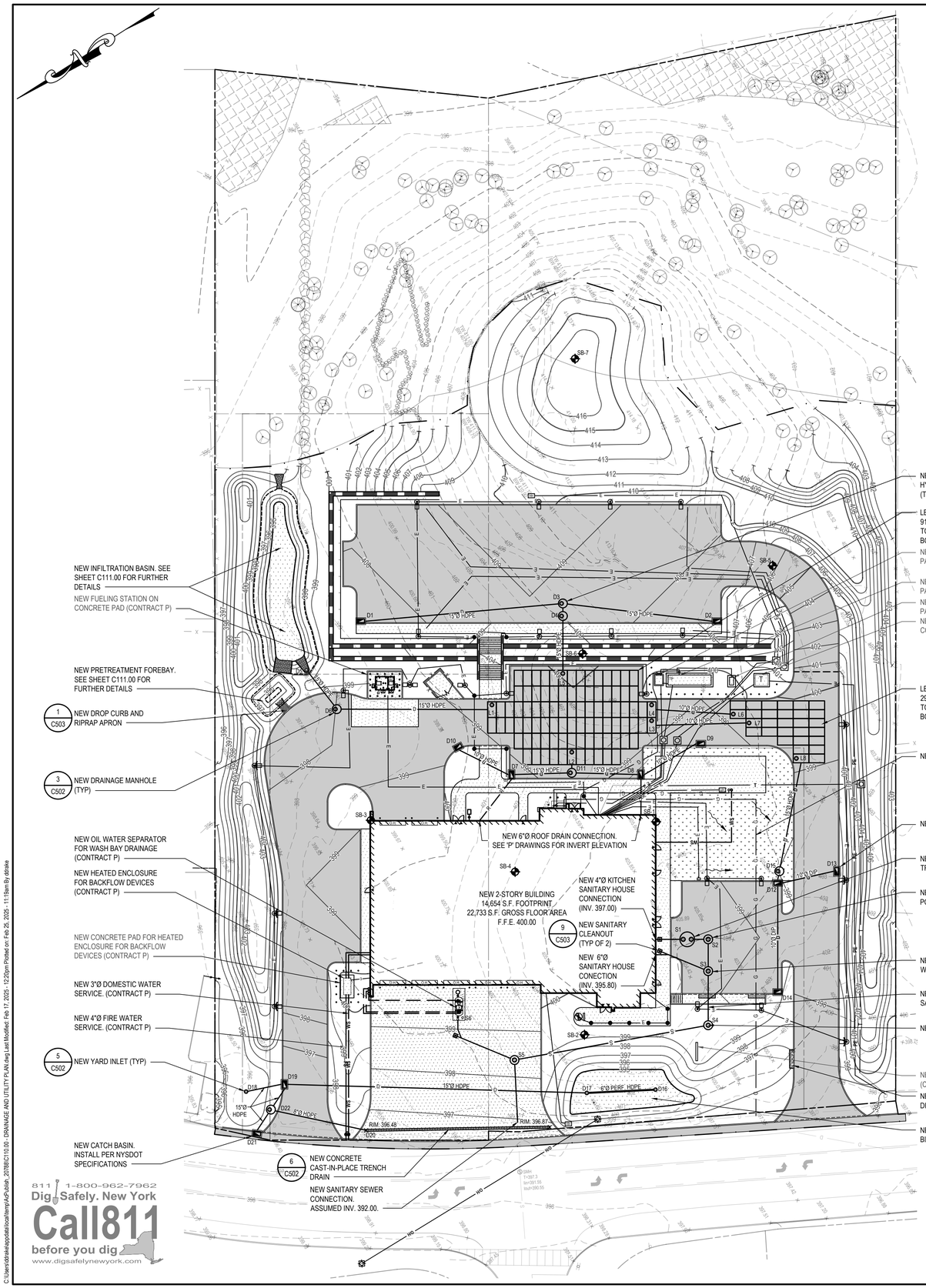

GRADING AND DRAINAGE NOTES:

1. FOR NEW CONSTRUCTION THAT MEETS EXISTING CONDITIONS, ABUTTING SURFACES SHALL BE FLUSH AND ALIGNED.
2. THE CONTRACTOR SHALL CONFIRM INVERT ELEVATIONS OF ALL ROOF DRAINS AND SANITARY HOUSE CONNECTIONS PRIOR TO COMMENCING SITE DRAINAGE AND SANITARY CONSTRUCTION.
3. ADJUST ALL EXISTING CASTINGS AND VALVE COVERS TO MEET PROPOSED GRADE.
4. CONSTRUCTION DEBRIS AND EXCESS SOIL SHALL BE REMOVED AND LEGALLY DISPOSED OFF SITE.
5. UNSUITABLE SOILS ENCOUNTERED DURING CONSTRUCTION SHALL BE BROUGHT TO THE ATTENTION OF THE OWNER AND ENGINEER IMMEDIATELY IN WRITING BEFORE REMOVAL OR DISTURBANCE.
6. TOWN OF HAVERSTRAW HIGHWAY DEPARTMENT WILL ACCEPT APPROXIMATELY 500 TRUCK LOADS OF MATERIAL. MATERIAL TO BE DELIVERED TO 113 THIELLS MT. IVY RD. THIELLS, NY 10984

SANITARY SEWAGE FLOW CALCULATION:

PROPOSED FIRE DEPT. BUILDING:
FIRE HALL (PER NYS SANITARY CODE):

SANITARY WASTE:	120 SEATS @	10 GPD/SEAT	=	1,200 GPD
KITCHEN WASTE:	120 SEATS @	10 GPD/SEAT	=	1,200 GPD
WASH BAY FLOW:	100 SF @	44.88 GAL/100 SF	=	46 GAL
	6,211.11 SF @	7.48 GAL/100 SF	=	465 GAL

TOTAL SANITARY SEWAGE: = 2,911 GPD

GREASE TRAP CALCULATION:

PROPOSED FIREHOUSE KITCHEN LOAD:

NEEDED CAPACITY: 120 SEATS @ 10 GPD/SEAT = 1,200 GPD

USE: 1 X 8'Ø GREASE TRAP W/ 5.0' LIQUID DEPTH: = 1,500 GAL

OIL-WATER SEPARATOR CALCULATION:

SEE PLUMBING PLANS FOR FURTHER INFORMATION.

REQUIRED CAPACITY: 511 GAL

PROVIDED: 550 GAL

PIPE MATERIAL SPECIFICATIONS:

DRAINAGE PIPING:

- CATCH BASIN TO LEACHING GALLEY CONNECTIONS: 15"Ø SMOOTH INTERIOR HDPE
- CATCH BASIN TO CATCH BASIN CONNECTIONS: 15"Ø SMOOTH INTERIOR HDPE*
- CATCH BASIN TO DRAINAGE MANHOLE CONNECTIONS: 15"Ø SMOOTH INTERIOR HDPE*
- YARD INLET TO DRAINAGE MANHOLE CONNECTIONS: 15"Ø SMOOTH INTERIOR HDPE
- DRAINAGE MANHOLE TO LEACHING GALLEY CONNECTIONS: 15"Ø SMOOTH INTERIOR HDPE
- LEACHING GALLEY TO LEACHING GALLEY CONNECTIONS: 10"Ø SMOOTH INTERIOR HDPE
- TRENCH DRAIN TO PIPE OUTLET CONNECTIONS: 8"Ø SMOOTH INTERIOR HDPE
- ROOF LEADER TO CATCH BASIN CONNECTIONS: 6"Ø SMOOTH INTERIOR HDPE
- FILTRATION BIO-RETENTION UNDERDRAIN: 6" CORRUGATED PERFORATED HDPE

*UNLESS OTHERWISE NOTED ON PLANS, PROFILES, OR DETAILS

SANITARY PIPING:

- GRAVITY SANITARY HOUSE CONNECTION: 6"Ø PVC (DR 18)*
- GRAVITY SANITARY SEWER COLLECTION SYSTEM: 6"Ø PVC (DR 18)*

*UNLESS OTHERWISE NOTED ON PLANS, PROFILES, OR DETAILS

WATER PIPING

- SEE PLUMBING PLANS

LEGEND

DESCRIPTION	SYMBOL
MAJOR CONTOUR	240
MINOR CONTOUR	241
BORING / TEST HOLE LOCATION	
RIDGE LINE	
RETAINING WALL	
CATCH BASIN	
YARD INLET	
ROOF LEADER	L
DRAINAGE CLEAN OUT	
SANITARY GREASE TRAP	G G
SANITARY CLEAN OUT	
SANITARY MANHOLE	S
UTILITY POLE/GUY POLE	
TRAFFIC SIGNAL POLE	
LIGHT POLE	
LIGHTED BOLLARD	
FLOW ARROW	
GAS LINE	G G
SANITARY LINE	S S
DRAINAGE LINE	D D
ELECTRIC LINE	E E
ROOF LEADER LINE	R R
FIRE SERVICE LINE	FS FS
WATER SERVICE LINE	WS WS
OVERHEAD UTILITIES LINE	O/H O/H
LIMIT OF DISTURBANCE LINE	

LEACHING GALLEY STRUCTURE SCHEDULE

SYSTEM ID	PIPE CONNECTION ID	INV. ELEVATION	TOP OF STRUCTURE ELEVATION	BOTTOM OF STRUCTURE ELEVATION	MIN SURFACE ELEVATION
SYSTEM A	L1	NE 396.10 (15")	398.00	395.00	399.00
	L2	NW 395.00 (15")			
	L3	SW 395.00 (10")			
	L4	SW 395.00 (10")			
	L5	SE 395.00 (15")			
SYSTEM B	L6	NE 396.50 (10")	398.00	395.00	399.00
	L7	NE 396.50 (10")			
	L8	NW 395.00 (15")			

NOTE: PROVIDE CASTING TO GRADE AT ALL LEACHING GALLEYS W/ PIPED CONNECTION.

DRAINAGE STRUCTURE SCHEDULE

STRUCT. NUMBER	STRUCTURE TYPE	RIM ELEVATION	INVERT ELEVATIONS
D1	NEW CATCH BASIN	RIM 407.47	SW 404.10 (15")
D2	NEW CATCH BASIN	RIM 407.33	NE 403.95 (15")
D3	NEW CASCADE HDS	RIM 408.70	NW,NE,SW 402.50 (15")
D4	NEW 4'Ø DRAINAGE MANHOLE W/ SOLID COVER	RIM 408.60	SE 402.25 (15") NW 397.50 (15")
D5	NEW YARD INLET	RIM 397.50	W 394.10 (15")
D6	NEW 4'Ø DRAINAGE MANHOLE W/ SOLID COVER	RIM 398.00	SW, E 394.45 (15")
D7	NEW CATCH BASIN	RIM 398.80	NE 395.55 (10") SW 395.55 (15") NW 395.55 (6")
D8	NEW CATCH BASIN	RIM 398.76	NE 395.35 (15") SE 395.35 (10") SW 395.35 (6")
D9	NEW CATCH BASIN	RIM 398.62	NE 395.70 (10")
D10	NEW CATCH BASIN	RIM 398.75	SE 395.85 (15")
D11	NEW CASCADE HDS	RIM 399.25	NE, SE, SW 395.05 (15")
D12	NEW CATCH BASIN	RIM 398.50	SE 395.40 (15") NW, SW 395.40 (10")*
D13	NEW CATCH BASIN	RIM 398.00	NE 395.60 (10")*
D14	NEW CATCH BASIN	RIM 398.50	SE 396.20 (10")*
D15	NEW CASCADE HDS	RIM 399.00	NW, SE 395.35 (15")
D16	NEW YARD INLET	RIM 396.00**	NE 391.70 (6")***
D17	NEW YARD INLET	RIM 396.00**	SW 391.70 (6")*** NE 391.70 (15")
D18	NEW YARD INLET	RIM 395.50	SW 392.10 (15")
D19	NEW CATCH BASIN	RIM 396.15	NE 391.70 (15") NW 392.75 (15") SW 390.00 (15")
D20	NEW TRENCH DRAIN	SEE PLAN	NE 393.75 (8")
D21	NEW NYSDOT CATCH BASIN	RIM 396.25	NE 391.55 (EXIST.) S 391.55 (15")
D22	NEW CASCADE HDS	RIM 396.30	N, S 392.65 (15")

(*) DENOTES DUCTILE IRON PIPE SHALL BE USED
(**) DENOTES RIM IS HIGHER THAN FINISHED GRADE
(***) DENOTES PERFORATED UNDERDRAIN PIPE SHALL BE USED

SANITARY STRUCTURE SCHEDULE

SEWER PIPE SHALL BE 6"Ø DR 18 PVC UNLESS OTHERWISE NOTED

STRUCT. NUMBER	STRUCTURE TYPE	RIM ELEVATION	TOP ELEVATION	BOTTOM ELEVATION	EFFECTIVE DEPTH	INVERT IN	INVERT OUT
S1	8' DIA. GREASE TRAP	RIM 399.35	397.15	390.90	5'	396.40 (4")	395.90 (6")
S2	4' DIA. SEWER ACCESS PORT W/ RETENTION AREA	RIM 399.25	--	--	----------	395.8 (6")	395.70 (6")
S3	4' DIA. SEWER ACCESS PORT W/ FORMED INVERT	RIM 399.20	--	--	----------	395.20 (6")	395.10 (6")
S4	4' DIA. SANITARY MANHOLE	RIM 399.34	--	--	----------	394.70 (6")	394.60 (6")
S5	4' DIA. SANITARY MANHOLE	RIM 398.36	--	--	----------	393.10 (6")	393.00 (6")
S6	550-GAL OIL WATER SEPARATOR	VARIES	--	--	----------	NOTE 1	396.65 (4")

NOTES:
1. SEE PLUMBING PLANS.

H2M architects + engineers
538 Broad Hollow Road, 4th Floor East
Melville, NY 11747
631.756.8000 • www.h2m.com
NY Architecture & Landscape Architecture: No Certificate Required
NY Engineering Certificate of Authorization No. 0018178

CONSULTANTS:

MARK	DATE	DESCRIPTION

STATE OF NEW YORK · DANIELLE A. DRAKE · 092596 · LICENSED PROFESSIONAL ENGINEER

DANIELLE A. DRAKE, P.E. 08/31/2027 DATE
NY PROFESSIONAL ENGINEER Lic. No. 092596
"IN ACCORDANCE WITH ARTICLE 145, SECTION 7209 OF THE NYS EDUCATION LAW, ALTERATION OF THIS DOCUMENT EXCEPT BY LICENSE PROFESSIONAL IS ILLEGAL"

DESIGNED BY:	DRAWN BY:	CHECKED BY:	REVIEWED BY:
WHS	WHS	DAD	MRM

PROJECT No.:	DATE:	SCALE:
TRFD 2302	FEBRUARY 2025	AS SHOWN

CLIENT
THIELLS ROSEVILLE FIRE DISTRICT

NEW 26-100 FIRE HEADQUARTERS

THIELLS 26 FD

65 W RAMAPO RD
GARNERVILLE, NY 10923

CONTRACT
CONTRACT C
CIVIL CONSTRUCTION

STATUS
FINAL BID DOCUMENT

SHEET TITLE
DRAINAGE & UTILITY PLAN

DRAWING No.
C 110.00

811 1-800-962-7962 Dig Safely. New York Call811 before you dig www.digsafelynewyork.com

C:\Users\drake\appdata\local\temp\AcPublish_20796\C110.00 - DRAINAGE AND UTILITY PLAN.dwg Last Modified: Feb 17, 2025 - 12:20pm Plotted on: Feb 25, 2025 - 11:15am By:drake

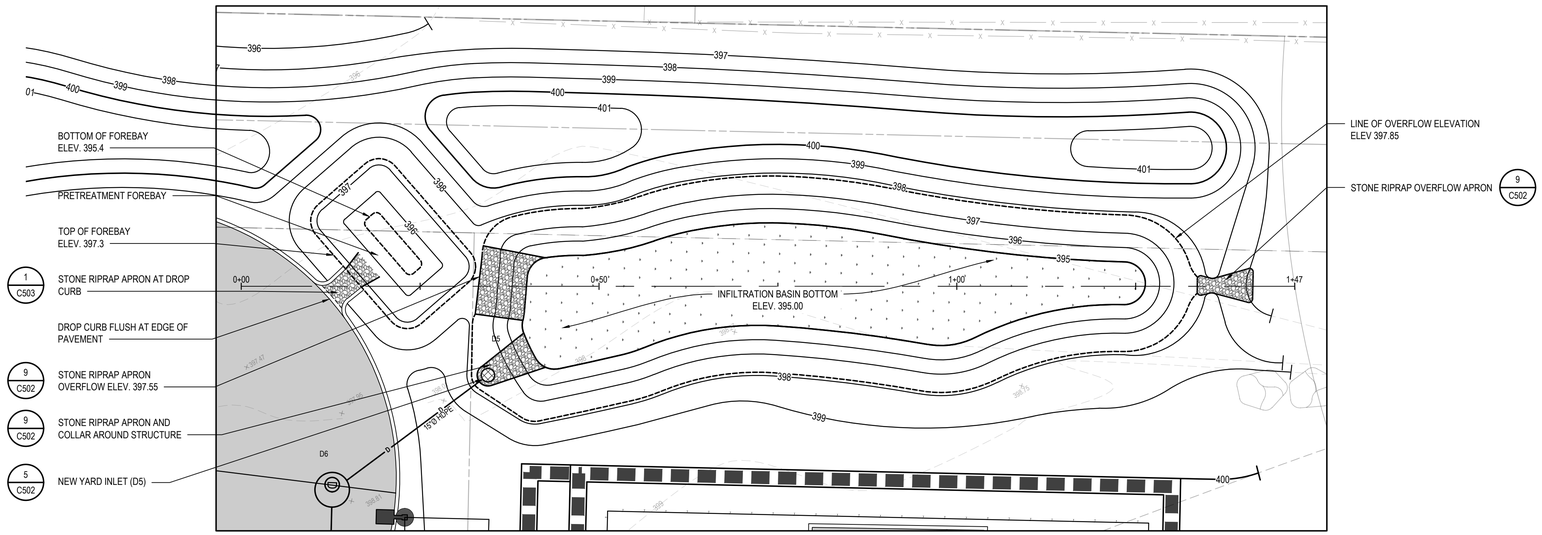

GRAPHIC SCALE

10 0 5 10

(IN FEET)
1 inch = 10 ft.

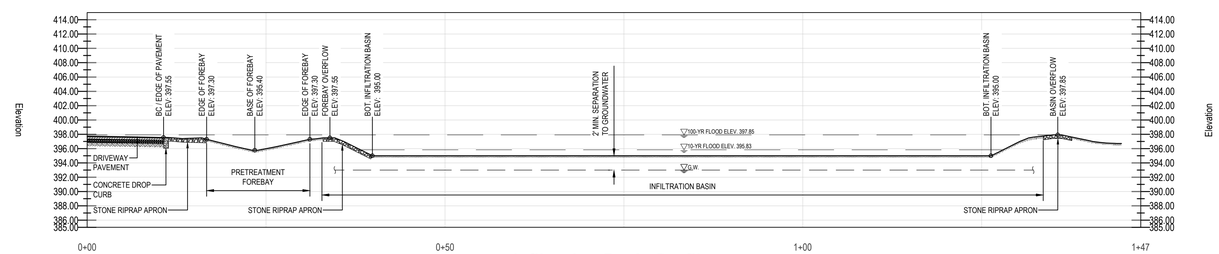

Infiltration Basin Profile

SCALE: 1" = 10'-0" H/V

INFILTRATION BASIN PONDING AREA STAGE STORAGE TABLE

STAGE ELEVATION (FT)	AREA (SF)	INCREMENTAL VOLUME (CF)	CUMULATIVE VOLUME (CF)
395.00	1,085	0	0
396.00	1,484	1,285	1,285
397.00	1,909	1,697	2,981
397.50	2,207	1,029	4,010
397.85	2,521	827	4,838

FOREBAY PONDING AREA STAGE STORAGE TABLE

STAGE ELEVATION (FT)	AREA (SF)	INCREMENTAL VOLUME (CF)	CUMULATIVE VOLUME (CF)
395.4	26	0	0
397.0	256	226	226
397.3	315	86	311

811 1-800-962-7962
Dig Safely. New York
Call811
before you dig
www.digsafelynewyork.com

X:\TRFD (Thiells Roseville Fire District)\TRFD2302 (New Fire Station)\02-BIM-CADD\Civil\Docs\75 Civil\C111.00 - DETAIL INFILTRATION BASIN PLAN.dwg Last Modified: Feb 17, 2025 - 1:20pm Plotted on: Feb 17, 2025 - 4:20pm By: wschlz

H2M architects + engineers

538 Broad Hollow Road, 4th Floor East
Melville, NY 11747
631.756.8000 • www.h2m.com
NY Architecture & Landscape Architecture: No Certificate Required
NY Engineering Certificate of Authorization No. 0018178

CONSULTANTS:

MARK	DATE	DESCRIPTION

STATE OF NEW YORK · DANIELLE A. DRAKE · 092596 · LICENSED PROFESSIONAL ENGINEER

Danielle Drake 08/31/2027
DATE

DANIELLE A. DRAKE, P.E.
NY PROFESSIONAL ENGINEER Lic. No. 092596
"IN ACCORDANCE WITH ARTICLE 145, SECTION 7209 OF THE NYS EDUCATION LAW, ALTERATION OF THIS DOCUMENT EXCEPT BY LICENSE PROFESSIONAL IS ILLEGAL"

DESIGNED BY:	DRAWN BY:	CHECKED BY:	REVIEWED BY:
WHS	WHS	DAD	MRM

PROJECT No.	DATE:	SCALE:
TRFD 2302	FEBRUARY 2025	AS SHOWN

CLIENT

THIELLS ROSEVILLE FIRE DISTRICT

NEW 26-100 FIRE HEADQUARTERS

65 W RAMAPO RD GARNERVILLE, NY 10923

CONTRACT

CONTRACT C CIVIL CONSTRUCTION

STATUS

FINAL BID DOCUMENT

SHEET TITLE

DETAIL INFILTRATION BASIN PLAN

DRAWING No.

C 111.00

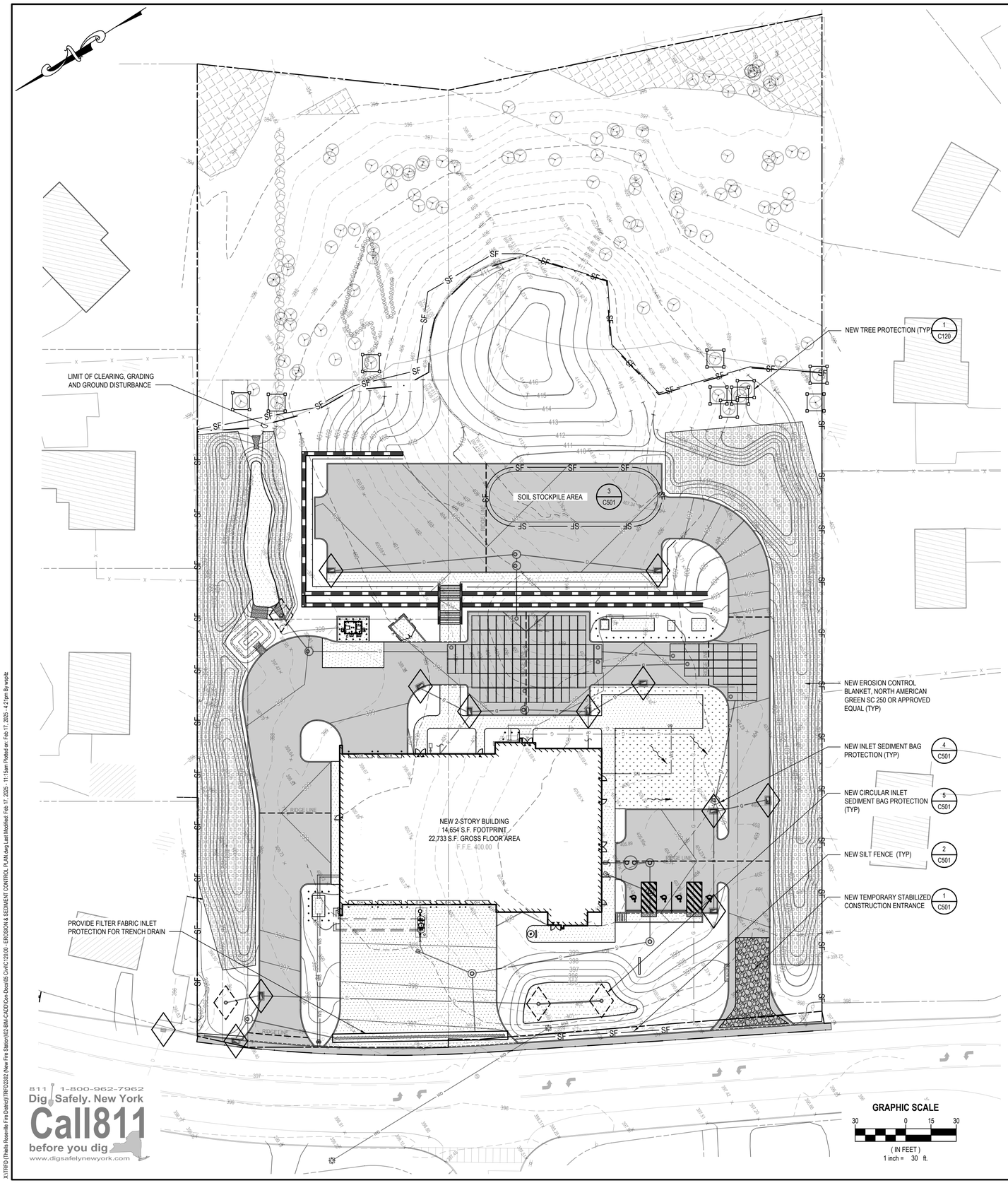

811 1-800-962-7962
Dig Safely. New York
Call811
before you dig
www.digsafelynewyork.com

X:\TRFD\Thiells Roseville Fire District\TRFD2302 (New Fire Station)\02-BIM-CADD\Con-Docs\05 Civil\C120.00 - EROSION & SEDIMENT CONTROL PLAN.dwg Last Modified: Feb 17, 2025 - 11:15am Plotted on: Feb 17, 2025 - 4:21pm By: wsolte

LEGEND

DESCRIPTION	SYMBOL
NEW SILT FENCE	SF SF
NEW INLET SEDIMENT BAG PROTECTION	
NEW CURB INLET SEDIMENT BAG	
NEW STABILIZED CONSTRUCTION ENTRANCE	
NEW EROSION CONTROL BLANKET	

EROSION CONTROL NOTES:

1. DURING THE COURSE OF CONSTRUCTION, EROSION AND SEDIMENT CONTROL MEASURES ARE NECESSARY TO PREVENT THE TRANSPORT OF SEDIMENT TO UNDISTURBED AREAS, PONDS, WATER COURSES, DRAINAGE SYSTEMS, RECHARGE BASINS, AND ROADS. THE MINIMUM EROSION CONTROL MEASURES REQUIRED ARE INDICATED ON THIS PLAN. IN ADDITION, THE FOLLOWING GENERAL CONDITIONS SHALL BE OBSERVED:
   a. EXISTING VEGETATION SCHEDULED TO REMAIN SHALL BE PROTECTED AND REMAIN UNDISTURBED.
   b. INSTALL ADDITIONAL EROSION AND SEDIMENT CONTROL MEASURES AS REQUIRED TO PREVENT THE INCIDENTAL DISCHARGE OF SEDIMENT FROM THE SITE.
2. SPECIFIC METHODS AND MATERIALS EMPLOYED IN THE INSTALLATION AND MAINTENANCE OF EROSION CONTROL MEASURES MUST CONFORM TO THE LATEST EDITION OF THE "NEW YORK STATE STANDARDS AND SPECIFICATIONS FOR EROSION AND SEDIMENT CONTROL".
3. INSTALL PROPRIETARY EROSION AND SEDIMENT CONTROL PRODUCTS IN ACCORDANCE WITH MANUFACTURERS INSTRUCTIONS.
4. ADJUST EROSION AND SEDIMENT CONTROL MEASURES TO ACCOMMODATE CONSTRUCTION PHASING TO MAINTAIN EFFECTIVENESS OF EROSION AND SEDIMENT CONTROL MEASURES.
5. PROTECT EXISTING DRAINAGE INLETS WITHIN THE PROJECT LIMITS AND NEW DRAINAGE INLETS INSTALLED AS PART OF THIS PROJECT FROM SEDIMENT INTRUSION.
6. PERFORM INSPECTION AND MAINTENANCE OF EROSION AND SEDIMENT CONTROL MEASURES ON A WEEKLY BASIS AND AFTER HEAVY OR PROLONGED STORMS. MAINTENANCE MEASURES INCLUDE, BUT ARE NOT LIMITED TO, CLEANING AND REPAIR OF ALL EROSION AND SEDIMENT CONTROL MEASURES.
7. UTILIZE APPROPRIATE MEANS TO CONTROL DUST DURING CONSTRUCTION, INCLUDING BUT NOT LIMITED TO APPLYING WATER TO BARE SOIL SURFACES.
8. MAINTAIN THE STABILIZED CONSTRUCTION ENTRANCE TO PREVENT SOIL AND LOOSE DEBRIS FROM BEING TRACKED ONTO LOCAL ROADS. MAINTAIN THE CONSTRUCTION ENTRANCE WEEKLY UNTIL THE SITE IS PERMANENTLY STABILIZED.
9. ALL EROSION AND SEDIMENT CONTROL MEASURES SHALL REMAIN IN PLACE UNTIL DISTURBED AREAS ARE PERMANENTLY STABILIZED. AFTER PERMANENT STABILIZATION, REMOVE ALL TEMPORARY EROSION AND SEDIMENT CONTROL MEASURES AND ALL ACCUMULATED SEDIMENT AND DEBRIS FROM THE SITE AND DRAINAGE STRUCTURES.

TOTAL LAND DISTURBANCE = 3.48 ACRES

STORMWATER POLLUTION PREVENTION PLAN (SWPPP) NOTES:

1. PURSUANT TO THE REQUIREMENTS OF SPDES GENERAL PERMIT FOR CONSTRUCTION ACTIVITY GP-0-20-001 ESTABLISHED BY THE NEW YORK STATE DEPARTMENT OF ENVIRONMENTAL CONSERVATION, A STORMWATER POLLUTION PREVENTION PLAN (SWPPP) HAS BEEN PREPARED FOR THIS PROJECT. ADHERE TO AND IMPLEMENT ALL REQUIREMENTS OF THE SWPPP AND EROSION AND SEDIMENT CONTROL PLAN.
2. REVIEW THE SWPPP AND SIGN IN THE LOCATION SHOWN STATING THAT ALL WORK PERTAINING TO EROSION AND SEDIMENT CONTROL WILL BE PERFORMED WITHIN REQUIREMENTS OF THE SWPPP AND EROSION AND SEDIMENT CONTROL PLAN.
3. THE OWNER SHALL PROVIDE A QUALIFIED INSPECTOR WHO WILL PERFORM WEEKLY INSPECTIONS AT THE CONSTRUCTION SITE. THE QUALIFIED INSPECTOR SHALL MEET THE REQUIREMENTS OUTLINED IN SPDES GENERAL PERMIT FOR STORMWATER DISCHARGE FROM CONSTRUCTION ACTIVITY (GP-0-20-001). IF THE INSPECTIONS FIND ANY DEVIATIONS FROM THE SWPPP OR THE EROSION AND SEDIMENT CONTROL PLAN IT WILL BE NOTED. THE CONTRACTOR WILL HAVE 7 DAYS TO CORRECT ANY DEVIATIONS SO THAT IT COMPLIES WITH THE REQUIREMENTS OF THE SWPPP AND OR EROSION AND SEDIMENT CONTROL PLAN. IN THE EVENT THAT MORE THAN 5 ACRES OF SOIL IS DISTURBED AT ANY TIME, 2 WEEKLY INSPECTIONS WILL BE PERFORMED.

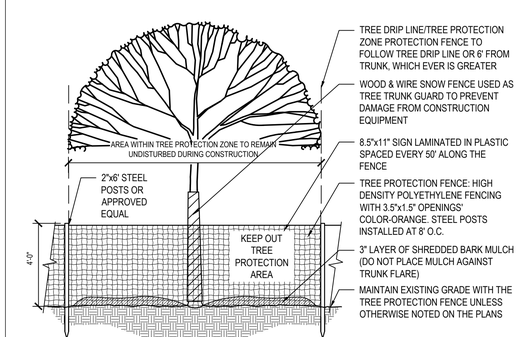

NOTES:

1. PLACE FENCE AT A MINIMUM 12" FROM TRUNK FOR EACH 1" OF CALIPER OR AT DRIPLINE OF TREE.
2. SEE SITE REMOVALS PLANS FOR TREE PROTECTION AREAS.
3. NO EQUIPMENT SHALL OPERATE INSIDE THE PROTECTIVE FENCING INCLUDING DURING FENCE INSTALLATION AND REMOVAL.
3. IF THERE IS NO EXISTING IRRIGATION, SEE SPECIFICATIONS FOR WATERING REQUIREMENTS.
4. NO PRUNING SHALL BE PERFORMED EXCEPT BY APPROVED ARBORIST.
5. REMOVE TREE PROTECTION FENCE AT CONMPLETION OF CONSTRUCTION.

1 Tree Protection Fence - Type 1
NTS

H2M architects + engineers
538 Broad Hollow Road, 4th Floor East
Melville, NY 11747
631.756.8000 • www.h2m.com
NY Architecture & Landscape Architecture: No Certificate Required
NY Engineering Certificate of Authorization No. 0018178

CONSULTANTS:

MARK	DATE	DESCRIPTION

STATE OF NEW YORK · DANIELLE A. DRAKE · 092596 · LICENSED PROFESSIONAL ENGINEER

Danielle Drake 08/31/2027
DATE

DANIELLE A. DRAKE, P.E.
NY PROFESSIONAL ENGINEER Lic. No. 092596

"IN ACCORDANCE WITH ARTICLE 145, SECTION 7209 OF THE NYS EDUCATION LAW, ALTERATION OF THIS DOCUMENT EXCEPT BY LICENSE PROFESSIONAL IS ILLEGAL"

DESIGNED BY:	DRAWN BY:	CHECKED BY:	REVIEWED BY:
WHS	WHS	DAD	MRM

PROJECT No.:	DATE:	SCALE:
TRFD 2302	FEBRUARY 2025	AS SHOWN

CLIENT

THIELLS ROSEVILLE FIRE DISTRICT

NEW 26-100 FIRE HEADQUARTERS

THIELLS 26 FD

65 W RAMAPO RD
GARNERVILLE, NY 10923

CONTRACT

CONTRACT 8
PLUMBING CONTRACT

STATUS

FINAL BID DOCUMENT

SHEET TITLE

SOIL EROSION AND SEDIMENT CONTROL PLAN

DRAWING No.

C 120.00

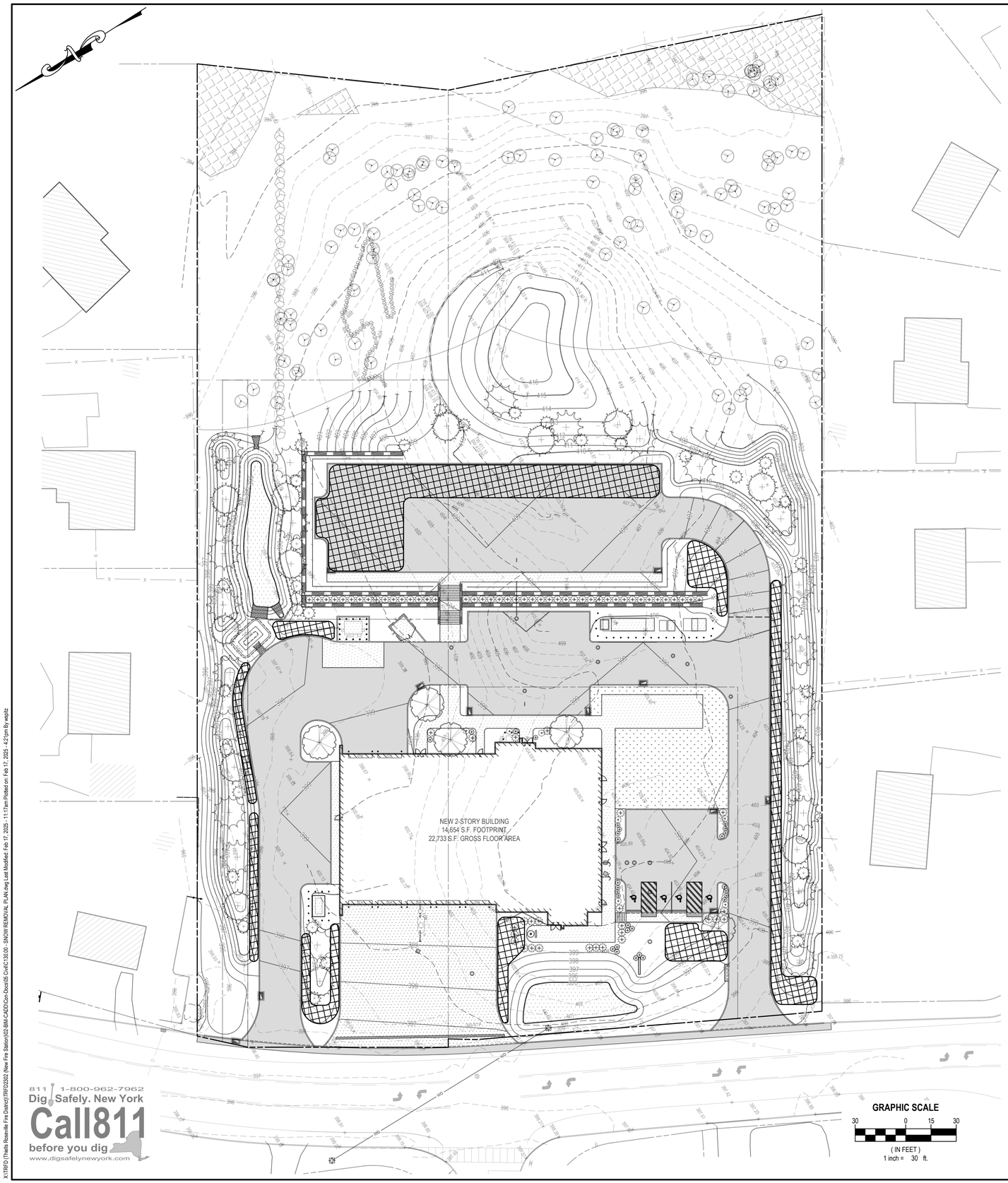

LEGEND

DESCRIPTION	SYMBOL
AREA ALLOCATED FOR SNOW STOCKPILE	

SNOW MANAGEMENT NOTE:

IN THE EVENT OF A SNOW STORM, DRIVEWAYS WILL BE CLEARED OF SNOW. SNOW WILL BE STOCKPILED IN OPEN AREAS AND/OR REMOVED AS NECESSARY TO KEEP PAVED AREAS CLEAR FOR MAINTENANCE AND EMERGENCY VEHICULAR TRAFFIC.

PERIMETER AREA OF DRIVEWAYS WILL BE USED FOR SNOW STORAGE FROM PLOWING OPERATIONS. PLOWING TO BE PERFORMED BY OWNER.

DURING PERIODS OF HEAVY ACCUMULATION, EXCESS SNOW WILL BE REMOVED AND DISPOSED OF OFFSITE.

SNOW STORAGE AREA: 12,547 SF

H2M architects + engineers

538 Broad Hollow Road, 4th Floor East
Melville, NY 11747
631.756.8000 • www.h2m.com
NY Architecture & Landscape Architecture: No Certificate Required
NY Engineering Certificate of Authorization No. 0018178

CONSULTANTS:

MARK	DATE	DESCRIPTION

STATE OF NEW YORK · DANIELLE A. DRAKE · 092596 · LICENSED PROFESSIONAL ENGINEER

DANIELLE A. DRAKE, P.E. — 08/31/2027 DATE
NY PROFESSIONAL ENGINEER Lic. No. 092596
"IN ACCORDANCE WITH ARTICLE 145, SECTION 7209 OF THE NYS EDUCATION LAW, ALTERATION OF THIS DOCUMENT EXCEPT BY LICENSE PROFESSIONAL IS ILLEGAL"

DESIGNED BY:	DRAWN BY:	CHECKED BY:	REVIEWED BY:
WHS	WHS	DAD	MRM
PROJECT No.: TRFD 2302	DATE: FEBRUARY 2025	SCALE: AS SHOWN	

CLIENT

THIELLS ROSEVILLE FIRE DISTRICT

NEW 26-100 FIRE HEADQUARTERS

65 W RAMAPO RD GARNERVILLE, NY 10923

CONTRACT

CONTRACT 9
PLUMBING CONTRACTOR

STATUS

FINAL BID DOCUMENT

SHEET TITLE

SNOW REMOVAL PLAN

DRAWING No.

C 130.00

X:\TRFD (Thiells Roseville Fire District)\TRFD2302 New Fire Station\02-BIM-CADD\Con-Docs\05-Civil\C130.00 - SNOW REMOVAL PLAN.dwg Last Modified: Feb 17, 2025 - 11:17am Plotted on: Feb 17, 2025 - 4:21pm By: wsoltz

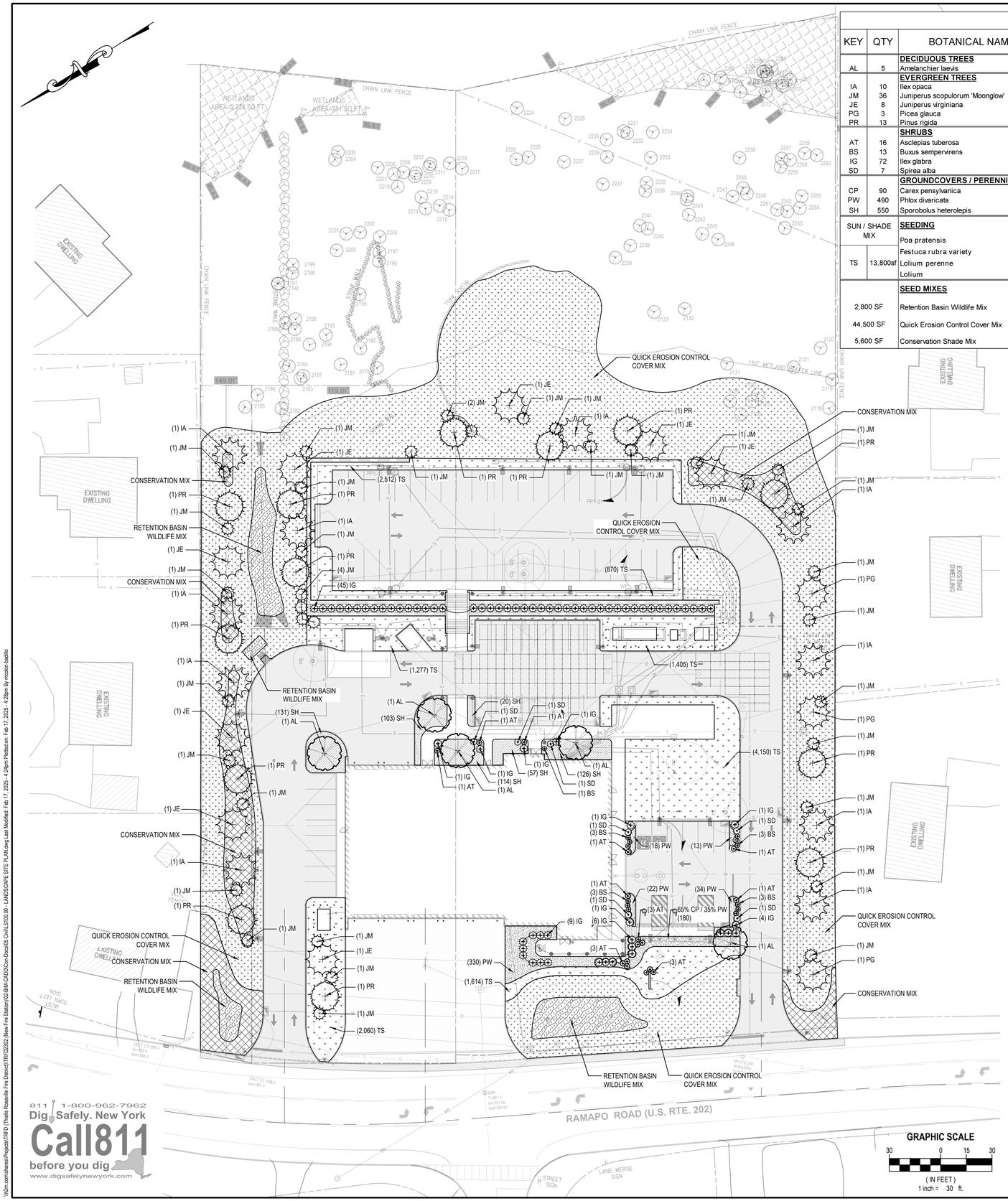

PLANT MATERIAL LIST

KEY	QTY	BOTANICAL NAME	COMMON NAME	SIZE AT INSTALL	ROOT	REMARKS
		DECIDUOUS TREES				
AL	5	Amelanchier laevis	Allegheny Serviceberry	5' - 6' Ht.	B&B	All trees to be specimen quality, have a single stem and a straight leader, well branched and limbed up 6'-7' unless otherwise noted.
		EVERGREEN TREES				
IA	10	Ilex opaca	American Holly	7' - 8' Ht.	B&B	All evergreen trees to be specimen quality, full and dense, branched to the ground.
JM	36	Juniperus scopulorum 'Moonglow'	Moonglow Juniper	7' - 8' Ht.	B&B	
JE	8	Juniperus virginiana	Eastern Redcedar	7' - 8' Ht.	B&B	
PG	3	Picea glauca	White Spruce	7' - 8' Ht.	B&B	
PR	13	Pinus rigida	Pitch Pine	7' - 8' Ht.	B&B	
		SHRUBS				
AT	16	Asclepias tuberosa	Orange Butterfly Milkweed	3 gal.	Pot	Shrubs to be full and dense with the minimum number of canes for size requested in accordance with the latest edition of the American Standard for Nursery Stock. Spacing of shrubs shall be as shown on the plan or as noted.
BS	13	Buxus sempervirens	Common Boxwood	3 gal.	Pot	
IG	72	Ilex glabra	Inkberry Holly	5 gal.	Pot	
SD	7	Spirea alba	White Meadowsweet	3 gal.	Pot	
		GROUNDCOVERS / PERENNIALS				
CP	90	Carex pensylvanica	Pennsylvania Sedge	1 gal.	Pot	Plant @ 18" o.c.
PW	490	Phlox divaricata	Woodland Phlox	1 gal.	Pot	Plant @ 18" o.c.
SH	550	Sporobolus heterolepis	Prairie Dropseed	1 gal.	Pot	Plant @ 24" o.c.
SUN / SHADE MIX		**SEEDING**		SEED MIX PROPORTION BY WEIGHT		SEEDING RATE
		Poa pratensis	Kentucky Bluegrass (Min of 3 cultivars)	15%		Seed at 5 lbs per 1,000 SF
TS	13,800sf	Festuca rubra variety	Creeping Red Fescue	35%		
		Lolium perenne	Perennial Rygrass	35%		
		Lolium	Annual Rygrass	15%		
		SEED MIXES				
2,800 SF		Retention Basin Wildlife Mix	See Specification			0.5-1 lb per 1,000 sq ft
44,500 SF		Quick Erosion Control Cover Mix	See Specification			50 lb per acre
5,600 SF		Conservation Shade Mix	See Specification			3-5 lb per 1,000 sq ft

LEGEND

DESCRIPTION	SYMBOL
EXISTING TREE	
NEW DECIDUOUS TREE	
NEW EVERGREEN TREE	
NEW DECIDUOUS SHRUB	
NEW EVERGREEN SHRUB	
NEW GROUND COVER	
NEW SEEDING	
RETENTION BASIN WILDLIFE SEED MIX	
QUICK EROSION CONTROL COVER SEED MIX	
CONSERVATION SEED MIX	

PLANTING NOTES

1. ALL SUPPLIED AND INSTALLED PLANT MATERIAL SHALL BE NURSERY GROWN STOCK IN ACCORDANCE WITH THE LATEST EDITION OF THE "AMERICAN STANDARD FOR NURSERY STOCK" (ANSI Z60.1). PLANT MATERIAL SHALL BE OF THE APPROVED SPECIES AND GROWN UNDER THE SAME CLIMATIC CONDITIONS AS THE SUBJECT SITE. THEY SHALL BE OF SYMMETRICAL GROWTH, FREE OF INSECTS, PESTS, AND DISEASE. SUBSTITUTIONS MUST BE APPROVED IN WRITING BY THE LANDSCAPE ARCHITECT.
2. CONFIRM THE LOCATION OF EXISTING SUBSURFACE UTILITIES WITH THE RESPECTIVE UTILITY COMPANIES AND COORDINATE WITH THE GRADING AND DRAINAGE PLAN OR UTILITY PLAN FOR THE LOCATION OF PROPOSED SUBSURFACE UTILITY LINES AND STRUCTURES PRIOR TO ANY EXCAVATION. NOTIFY THE LANDSCAPE ARCHITECT IF ANY CONFLICTS EXIST.
3. NOTIFY THE LANDSCAPE ARCHITECT IMMEDIATELY AND PRIOR TO THE INSTALLATION OF ANY PLANT MATERIALS IF SUB-GRADE SOIL CONDITIONS ARE DELETERIOUS TO PLANT GROWTH OR WILL INHIBIT DRAINAGE.
4. IF ANY DISCREPANCY EXISTS BETWEEN THE PLANT COUNT SHOWN IN THE PLANT MATERIAL LIST AND THE PLANTING PLAN, THE PLAN SHALL TAKE PRECEDENCE.
5. UNLESS OTHERWISE APPROVED IN WRITING, INSTALL VEGETATION DURING THE FOLLOWING PERIODS:
   a. DECIDUOUS WOODY PLANTS: SEPTEMBER 15 TO MAY 15 WHENEVER TEMPERATURE IS ABOVE 40 DEGREES F.
   b. EVERGREENS: AUGUST 15 TO SEPTEMBER 15 OR DURING APRIL AND MAY BEFORE THE START OF NEW GROWTH.
   c. SEEDING: APRIL 1 TO MAY 15 AND SEPTEMBER 1 TO OCTOBER 15.
6. PLANTS SHALL BEAR THE SAME RELATIONSHIP TO FINISHED GRADE AS THEY BORE TO THE EXISTING GRADE IN THE NURSERY.
7. THE TRUNK DIAMETER OF DECIDUOUS TREES SHALL BE MEASURED IN ACCORDANCE WITH THE LATEST EDITION OF THE "AMERICAN STANDARD FOR NURSERY STOCK" (ANSI Z60.1) FOR THE CALIPER SIZE AS SHOWN IN THE PLANT MATERIAL LIST.
8. ALL DECIDUOUS TREES SHALL BE BRANCHED NOT LOWER THAN SEVEN (7) FEET WITH AN AVERAGE HEIGHT AND SPREAD FOR THE PARTICULAR SIZE AND SPECIES SPECIFIED, IN ACCORDANCE WITH THE LATEST EDITION OF THE AMERICAN STANDARD FOR NURSERY STOCK.
9. DO NOT LOCATE TREE TRUNKS WITHIN THREE (3) FEET OF ANY PARKING LOT OR STREET CURBS.
10. INSTALL A 2"-3" LAYER OF SHREDDED BARK MULCH IN ALL TREE PLANTING AREAS AND SHRUB BEDS. DO NOT PLACE MULCH DIRECTLY AGAINST TRUNKS OF TREES. FORM AN EARTH SAUCER AROUND EACH PLANT OR SHRUB BED SO AS TO HOLD WATER AND MULCH. PROVIDE SUFFICIENT IRRIGATION FOR ALL PLANT MATERIALS TO MAINTAIN HEALTHY AND VIGOROUS CONDITION UNTIL THE PROJECT IS ACCEPTED BY THE OWNER.
11. REMOVE TREE STAKES AND OTHER PLANTING GUIDE MATERIALS,IF SPECIFIED, AFTER ONE YEAR FROM THE TIME OF PLANTING.
12. ALL PLANT MATERIAL SHALL BE GUARANTEED FOR A PERIOD OF ONE YEAR AFTER PLANTING FOLLOWING ACCEPTANCE BY THE OWNER. UPON COMPLETION OF THE ONE YEAR PLANT GUARANTEE PERIOD, REPLACE ALL PLANT MATERIAL DEEMED DEAD, DYING OR DISEASED AS DETERMINED BY THE LANDSCAPE ARCHITECT. REPLACE PLANT WITH THE SAME SPECIES AND SIZE IMMEDIATELY DURING THE CURRENT GROWING SEASON OR AT THE BEGINNING OF THE NEXT GROWING SEASON.
13. UPON COMPLETION OF PLANTING OPERATION CULTIVATE AND NEATLY RAKE ALL PLANTING AREAS.
14. RESTORE ALL DISTURBED GRASS AREAS AND ALL AREAS NOT SPECIFICALLY IDENTIFIED FOR OTHER IMPROVEMENTS WITH 4 INCHES OF TOPSOIL AND SEED. PROVIDE SUFFICIENT MULCH AND IRRIGATION TO ESTABLISH AND MAINTAIN A HEALTHY STAND OF GRASS UNTIL PROJECT IS ACCEPTED BY THE OWNER.
15. INSTALL AN AUTOMATIC UNDERGROUND IRRIGATION SYSTEM BY OWNER FOR ALL LANDSCAPED AND LAWN AREAS INCLUDING A RAIN SENSOR OVERRIDE AND MULTI-ZONE CONTROLLER, CAPABLE OF PROVIDING VARYING AMOUNTS OF WATER TO MULTIPLE AREAS DEPENDING ON THE REQUIREMENTS OF THE VARIOUS TREES, SHRUBS, GROUND COVERS AND LAWN AREAS.

GRAPHIC SCALE
30 0 15 30
(IN FEET)
1 inch = 30 ft.

H2M architects + engineers
538 Broad Hollow Road, 4th Floor East
Melville, NY 11747
631.756.8000 • www.h2m.com
NY Architecture & Landscape Architecture: No Certificate Required
NY Engineering Certificate of Authorization No. 0018178

CONSULTANTS:

MARK	DATE	DESCRIPTION

LICENSED LANDSCAPE ARCHITECT KENNETH ADAM KELTAI No. 001951 STATE OF NEW YORK
02/28/2025 EXP. DATE
KENNETH A. KELTAI, R.L.A.
NY REGISTERED LANDSCAPE ARCHITECT Lic. No. 001951

"IN ACCORDANCE WITH ARTICLE 145, SECTION 7209 OF THE NYS EDUCATION LAW, ALTERATION OF THIS DOCUMENT EXCEPT BY LICENSE PROFESSIONAL IS ILLEGAL"

DESIGNED BY:	DRAWN BY:	CHECKED BY:	REVIEWED BY:
MCB / KAK	MCB	KAK	

PROJECT No.:	DATE:	SCALE:
TRFD 2302	FEBRUARY 2025	AS SHOWN

CLIENT

THIELLS ROSEVILLE FIRE DISTRICT

NEW 26-100 FIRE HEADQUARTERS

THIELLS 26 FD

65 W RAMAPO RD
GARNERVILLE, NY 10923

CONTRACT
CONTRACT C
CIVIL CONSTRUCTION

STATUS
FINAL BID DOCUMENT

SHEET TITLE
LANDSCAPE SITE PLAN

DRAWING No.
LS 100.00

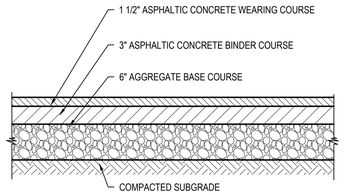

NOTE:
COMPACT SUBGRADE TO 92% MAXIMUM DENSITY IN ACCORDANCE WITH ASTM D1557.

1 Asphalt Pavement - Heavy Duty

SCALE: NTS (321216.13 H2MX2) - U

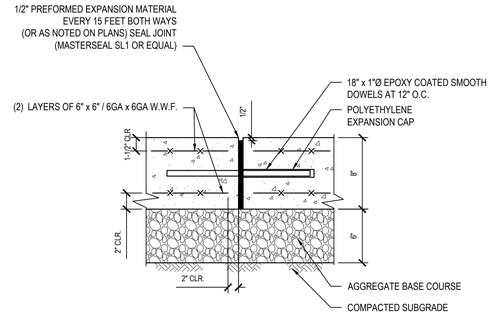

NOTE:
1. CONCRETE TO ACHIEVE 4,000 P.S.I. STRENGTH AT 28 DAYS.
2. APPLY BROOM FINISH PERPENDICULAR TO PRIMARY DIRECTION OF TRAVEL.
3. THIS DETAIL APPLIES TO ALL JOINTS IN NEW CONCRETE PAVEMENT AND WHEN NEW CONCRETE PAVEMENT ABUTS EXISTING CONCRETE PAVEMENT. WHEN ABUTTING EXISTING CONCRETE PAVEMENT, DRILL AND GROUT DOWELS INTO EXISTING CONCRETE PAVEMENT .
4. COMPACT SUBGRADE TO 92% MAXIMUM DENSITY IN ACCORDANCE WITH ASTM D1557.

2 Concrete Pavement - Heavy Duty

SCALE: NTS (321313.26 H2MX1) - U

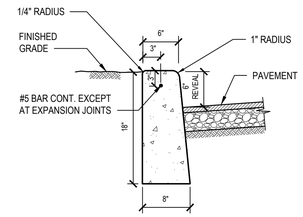

NOTES:
1. WOOD FLOAT AND BRUSH FINISH ON ALL SURFACES ABOVE GRADE.
2. AT ALL CURB ENDINGS, PROVIDE SMOOTH TRANSITION DOWN TO PAVED SURFACE.
3. PROVIDE 1/2" PREFORMED EXPANSION MATERIAL AT 20' ON CENTER AND AT ALL CORNERS. SET EXPANSION MATERIAL 1/2" BELOW EXPOSED SURFACES AND SEAL JOINT.
4. CONCRETE TO ACHIEVE 4,000 PSI STRENGTH AT 28 DAYS.

3 Concrete Curb

SCALE: NTS (321613.16 H2MX1)

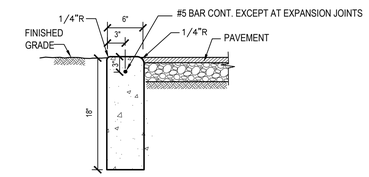

NOTES:
1. WOOD FLOAT AND BRUSH FINISH ON ALL SURFACES ABOVE GRADE.
2. AT ALL CURB ENDINGS, PROVIDE SMOOTH TRANSITION DOWN TO PAVED SURFACE.
3. PROVIDE 1/2" PREFORMED EXPANSION MATERIAL AT 20' ON CENTER AND AT ALL CORNERS. SET EXPANSION MATERIAL 1/2" BELOW EXPOSED SURFACES AND SEAL JOINT.
4. CONCRETE TO ACHIEVE 4000 PSI STRENGTH AT 28 DAYS.

4 Flush Concrete Curb

NTS (321613.16 H2MX1) -U -R

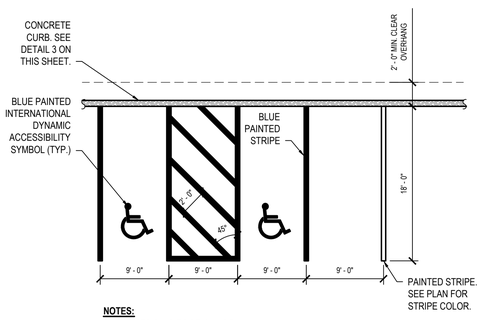

NOTES:
1. ALL STRIPING TO BE 4" WIDE.
2. SEE DIMENSIONAL SITE PLAN FOR LOCATIONS OF PARKING STALL SIGNAGE.

5 Parking Stall Layout - Single Striping

SCALE: NTS (321799.00 H2MX1) - MOD

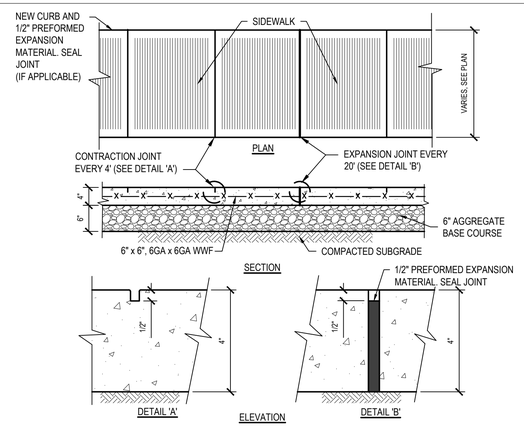

NOTES:
1. CONCRETE TO ACHIEVE 4000 PSI STRENGTH AT 28 DAYS
2. COMPACT SUBGRADE TO 92% MAXIMUM DENSITY IN ACCORDANCE WITH ASTM D1557.
3. APPLY BROOM FINISH PERPENDICULAR TO DIRECTION OF TRAVEL.

6 Concrete Sidewalk

SCALE: NTS 321313.33 H2MX1

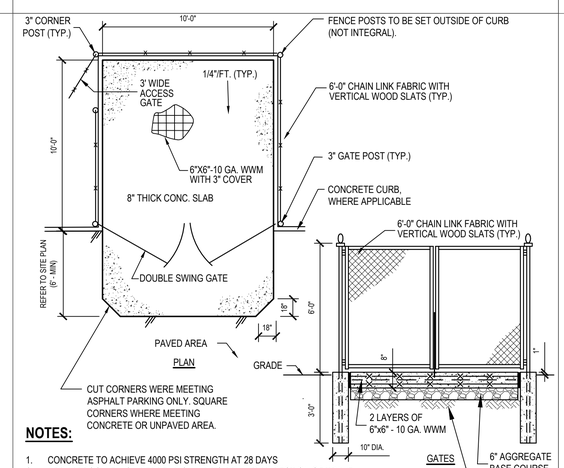

NOTES:
1. CONCRETE TO ACHIEVE 4000 PSI STRENGTH AT 28 DAYS
2. APPLY BROOM FINISH PERPENDICULAR TO PRIMARY DIRECTION OF TRAVEL
3. COMPACT SUBGRADE TO 92% MAXIMUM DENSITY IN ACCORDANCE WITH ASTM D1557
4. REFER TO DETAILS FOR FURTHER INFORMATION

7 Refuse Enclosure

NTS 323599.00 H2MX1

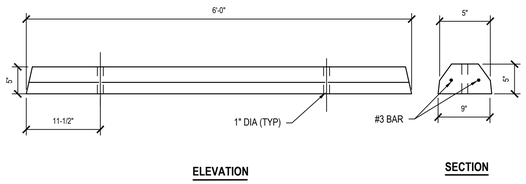

NOTES:
1. CONCRETE TO ACHIEVE 4,000 PSI STRENGTH AT 28 DAYS.
2. REINFORCEMENT: ASTM A615 GRADE 60.
3. ANCHOR TO PAVEMENT WITH TWO - 12" #6 REINFORCING BARS.

8 Concrete Wheel Stop

SCALE: NTS (321713.19 H2MX1) - U

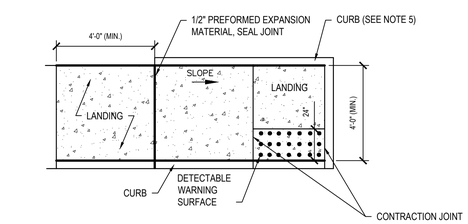

PLAN

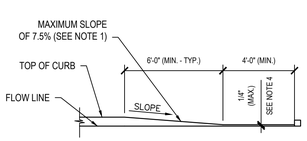

ELEVATION

9 Concrete Handicap Ramp - Hybrid - Parallel

SCALE: NTS (321313.36 H2MX3) - U

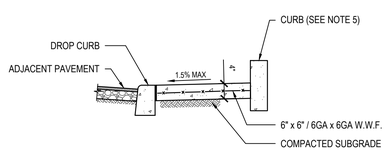

SECTION

NOTES:
1. DIMENSIONS SHOWN ARE APPLICABLE FOR INSTALLATION WITH 6" CURB REVEAL. DIMENSIONS OF FLARE AND RAMP LENGTH FOR INSTALLATION WITH ALTERNATE CURB REVEALS MAY BE MODIFIED TO MAINTAIN A RAMP SLOPE NOT TO EXCEED 7.5%.
2. THE SIZE OF THE DETECTABLE WARNING FIELD SHALL BE 24" IN THE DIRECTION OF TRAVEL AND SHALL EXTEND THE FULL WIDTH OF THE CURB RAMP EXCLUSIVE OF SIDE FLARES.
3. MAXIMUM SLOPE OF LANDING IS 1.5% IN ANY DIRECTION.
4. RAMP TRANSITIONS BETWEEN WALKS, GUTTERS, OR STREETS SHALL BE FLUSH AND FREE OF ABRUPT VERTICAL CHANGES (1/4" MAX)
5. OMIIT CURB FOR INSTALLATIONS ADJACENT TO BUILDING FOUNDATIONS.
6. CONCRETE TO ACHIEVE 4,000 P.S.I. STRENGTH AT 28 DAYS.
7. COMPACT SUBGRADE TO 92% MAXIMUM DENSITY IN ACCORDANCE WITH ASTM D1557.
8. APPLY BRUSH FINISH PERPENDICULAR TO DIRECTION OF SLOPE.
9. REFER TO CONCRETE SIDEWALK DETAIL FOR INFORMATION REGARDING CONTRACTION AND EXPANSION JOINTS.

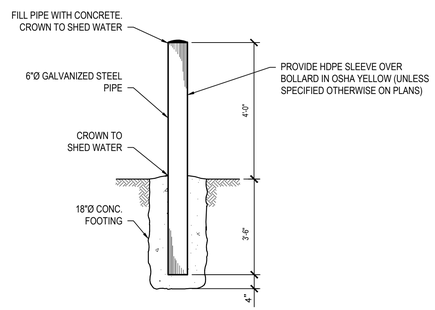

NOTE:
1. CONCRETE TO ACHIEVE 4,000 PSI STRENGTH AT 28 DAYS.

10 Steel Bollard - 6" Diameter

SCALE: NTS (323613.00 H2MX2)

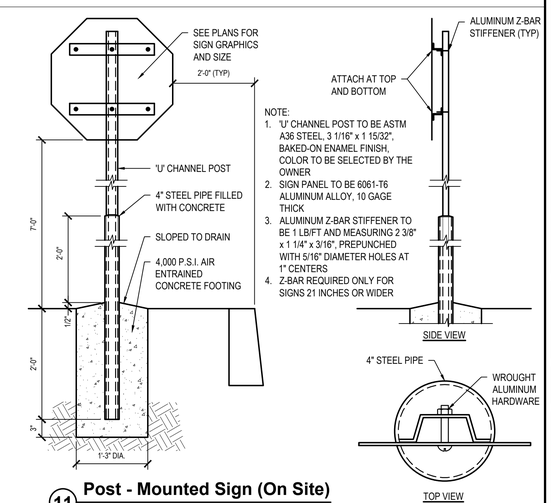

NOTE:
1. 'U' CHANNEL POST TO BE ASTM A36 STEEL, 3 1/16" x 1 15/32", BAKED-ON ENAMEL FINISH, COLOR TO BE SELECTED BY THE OWNER
2. SIGN PANEL TO BE 6061-T6 ALUMINUM ALLOY, 10 GAGE THICK
3. ALUMINUM Z-BAR STIFFENER TO BE 1 LB/FT AND MEASURING 2 3/8" x 1 1/4" x 3/16", PREPUNCHED WITH 5/16" DIAMETER HOLES AT 1" CENTERS
4. Z-BAR REQUIRED ONLY FOR SIGNS 21 INCHES OR WIDER

11 Post - Mounted Sign (On Site)

SCALE: NTS (101453H2MX1) - U

H2M architects + engineers
538 Broad Hollow Road, 4th Floor East
Melville, NY 11747
631.756.8000 • www.h2m.com
NY Architecture & Landscape Architecture: No Certificate Required
NY Engineering Certificate of Authorization No. 0018178

CONSULTANTS:

MARK	DATE	DESCRIPTION

STATE OF NEW YORK · DANIELLE A. DRAKE · 092596 · LICENSED PROFESSIONAL ENGINEER

DANIELLE A. DRAKE, P.E.
NY PROFESSIONAL ENGINEER Lic. No. 092596

08/31/2027 EXP. DATE

"IN ACCORDANCE WITH ARTICLE 145, SECTION 7209 OF THE NYS EDUCATION LAW, ALTERATION OF THIS DOCUMENT EXCEPT BY LICENSE PROFESSIONAL IS ILLEGAL"

DESIGNED BY:	DRAWN BY:	CHECKED BY:	REVIEWED BY:
WHS	WHS	DAD	MRM

PROJECT No.:	DATE:	SCALE:
TRFD 2302	FEBRUARY 2025	AS SHOWN

CLIENT

THIELLS ROSEVILLE FIRE DISTRICT

NEW 26-100 FIRE HEADQUARTERS

THIELLS 26 FD

65 W RAMAPO RD GARNERVILLE, NY 10923

CONTRACT

CONTRACT C CIVIL CONSTRUCTION

STATUS

FINAL BID DOCUMENT

SHEET TITLE

SITE DETAILS (1 OF 4)

DRAWING No.

C 500.00

X:\TRFD\Thiells Roseville Fire District\TRFD2302 New Fire Station\02-BIM-CADD\Cov-Dwn\05 Civil\C500.00 - SITE DETAILS (1 OF X).dwg Last Modified: Feb 17, 2025 - 11:18am Plotted on Feb 17, 2025 - 4:21pm By wpdiz

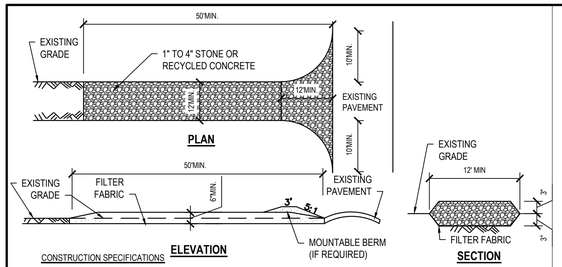

CONSTRUCTION SPECIFICATIONS

1. STONE OR RECYCLED CONCRETE SIZE TO BE 1" TO 4".
2. LENGTH - NOT LESS THAN 50 FEET (UNLESS INDICATED OTHERWISE ON PLANS).
3. THICKNESS - NOT LESS THAN SIX (6) INCHES.
4. WIDTH - TWELVE (12) FOOT MINIMUM, BUT NOT LESS THAN THE FULL WIDTH AT POINTS WHERE INGRESS OR EGRESS OCCURS. TWENTY-FOUR (24) FOOT IF SINGLE ENTRANCE TO SITE.
5. PLACE FILTER FABRIC OVER THE ENTIRE AREA PRIOR TO PLACING OF STONE. FILTER FABRIC TO BE TREVIRA SPUNBOND, 1135 MIRAFI 600X OR EQUIVALENT.
6. SURFACE WATER - ALL SURFACE WATER FLOWING OR DIVERTED TOWARD CONSTRUCTION ENTRANCES SHALL BE PIPED BENEATH THE ENTRANCE. IF PIPING IS IMPRACTICAL, A MOUNTABLE BERM WITH 5:1 SLOPES WILL BE PERMITTED.
7. MAINTENANCE - THE ENTRANCE SHALL BE MAINTAINED IN A CONDITION WHICH WILL PREVENT TRACKING OR FLOWING OF SEDIMENT ONTO PUBLIC RIGHTS-OF-WAY, ALL SEDIMENT SPILLED, DROPPED, WASHED OR TRACKED ONTO PUBLIC RIGHTS-OF-WAY MUST BE REMOVED IMMEDIATELY.
8. WHEN WASHING IS REQUIRED, IT SHALL BE DONE ON AN AREA STABILIZED WITH STONE AND WHICH DRAINS INTO AN APPROVED SEDIMENT TRAPPING DEVICE.
9. PERIODIC INSPECTION AND NEEDED MAINTENANCE SHALL BE PROVIDED AFTER EACH RAIN.

1 Stabilized Construction Entrance

SCALE: NTS (312513.19 NYDC1) - U

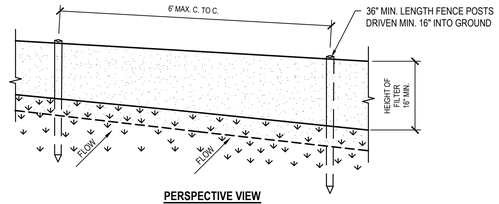

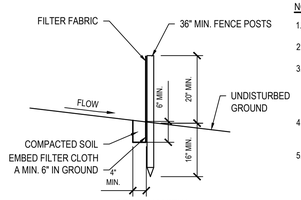

NOTES

1. POSTS SHALL BE 2" X 2" HARDWOOD OR APPROVED EQUIVALENT.
2. FILTER CLOTH TO BE TO BE FASTENED SECURELY TO POSTS AT TOP AND MID SECTION.
3. WHEN TWO SECTIONS OF FILTER CLOTH ADJOIN EACH OTHER THEY SHALL BE OVERLAPPED BY SIX INCHES AND FOLDED AND SECURE AT POST. FILTER CLOTH SHALL BE EITHER FILTER X, MIRAFI 100X, STABILINKA T140N, OR APPROVED EQUIVALENT.
4. MAINTENANCE SHALL BE PERFORMED AS NEEDED AND ACCUMULATED SEDIMENT REMOVED WHEN "BULGES" DEVELOP IN THE SILT FENCE.
5. REMOVE SILT FENCE UPON PERMANENT STABILIZATION OF UPLAND AREAS.

2 Silt Fence - Standard

SCALE: NTS 312513.13 NYDC1-U

NOTES:

1. AREA CHOSEN FOR STOCKPILING OPERATIONS SHALL BE DRY AND STABLE.
2. MAXIMUM SLOPE OF STOCKPILE SHALL BE 2:1.
3. UPON COMPLETION OF SOIL STOCKPILING, EACH PILE SHALL BE SURROUNDED WITH EITHER SILT FENCING OR STRAW BALES, THEN STABILIZED WITH VEGETATION OR COVERED.

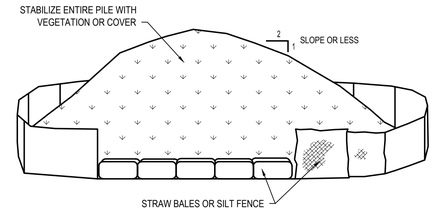

TO BE USED WHERE TOPSOIL IS NECESSARY FOR REGRADING AND VEGETATING DISTURBED AREAS. TEMPORARY STOCKPILE STABILIZATION MEASURES INCLUDE VEGETATIVE COVER, MULCH, NONVEGETATIVE COVER, AND PERIPHERAL SEDIMENT TRAPPING BARRIERS. THE STABILIZATION MEASURE(S) SELECTED SHOULD BE APPROPRIATE FOR THE TIME OF YEAR, SITE CONDITIONS, AND REQUIRED PERIOD OF USE.

3 Temporary Soil Stockpile

SCALE: NTS 312513.23 NYDC1-U

FILTER FABRIC PROPERTIES

Mechanical Properties	Test Method	Units	MARV
Grab Tensile Strength	ASTM D 4632	lbs	365 x 200
Grab Tensile Elongation	ASTM D 4632	%	24 x 10
Puncture Strength	ASTM D 4833	lbs	90
Mullen Burst Strength	ASTM D 3786	psi	450
Trapezoid Tear Strength	ASTM D 4533	lbs	115 x 75
UV Resistence	ASTM D 4355	%	90
Apparent Opening Size	ASTM D 4751	US Std Sieve)	40
Flow Rate	ASTM D 4491	gal/min/ft²	145
Permittivity	ASTM D 4491	Sec⁻¹	2.1

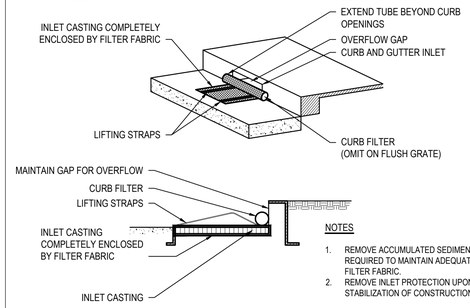

NOTES

1. REMOVE ACCUMULATED SEDIMENT AND DEBRIS AS REQUIRED TO MAINTAIN ADEQUATE FLOW THROUGH FILTER FABRIC.
2. REMOVE INLET PROTECTION UPON PERMANENT STABILIZATION OF CONSTRUCTION SITE.

4 Curb Inlet Sediment Bag Protection

SCALE: NTS (312553.13 H2MX1) - U

FILTER FABRIC PROPERTIES

Mechanical Properties	Test Method	Units	MARV
Grab Tensile Strength	ASTM D 4632	lbs	365 x 200
Grab Tensile Elongation	ASTM D 4632	%	24 x 10
Puncture Strength	ASTM D 4833	lbs	90
Mullen Burst Strength	ASTM D 3786	psi	450
Trapezoid Tear Strength	ASTM D 4533	lbs	115 x 75
UV Resistence	ASTM D 4355	%	90
Apparent Opening Size	ASTM D 4751	US Std Sieve)	40
Flow Rate	ASTM D 4491	gal/min/ft²	145
Permittivity	ASTM D 4491	Sec⁻¹	2.1

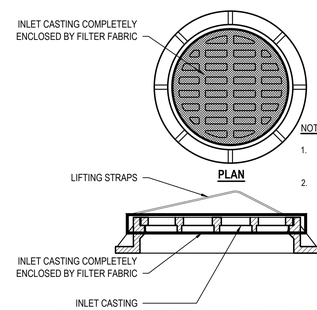

NOTES

1. REMOVE ACCUMULATED SEDIMENT AND DEBRIS AS REQUIRED TO MAINTAIN ADEQUATE FLOW THROUGH FILTER FABRIC.
2. REMOVE INLET PROTECTION UPON PERMANENT STABILIZATION OF CONSTRUCTION SITE.

5 Circular Inlet Sediment Bag Protection

SCALE: NTS 312553.13 H2MX2

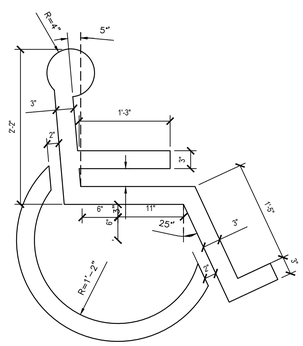

6 Accessibility Symbol

SCALE: NTS 321799.01 H2MX2

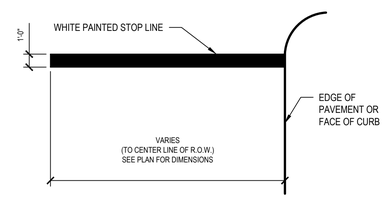

NOTE:

1. SEE DIMENSIONAL SITE PLAN FOR STOP BAR LOCATION

7 Stop Bar

SCALE: NTS 321723.13 (H2MX1) -U

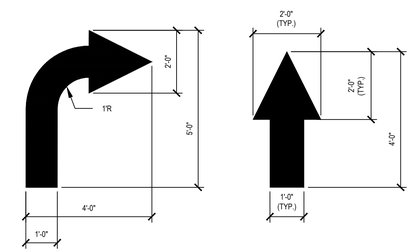

NOTES:

1. ALL ARROWS MAY NOT BE APPLICABLE TO THIS PROJECT. REFER TO SITE PLAN SHEETS.
2. TURN ARROW DETAILS SHOWN ARE FOR RIGHT TURN. REVERSE DETAILS AS REQUIRED FOR LEFT TURNS.

8 Directional Arrows - On SIte

SCALE: NTS 321723.13 H2MX1 -U

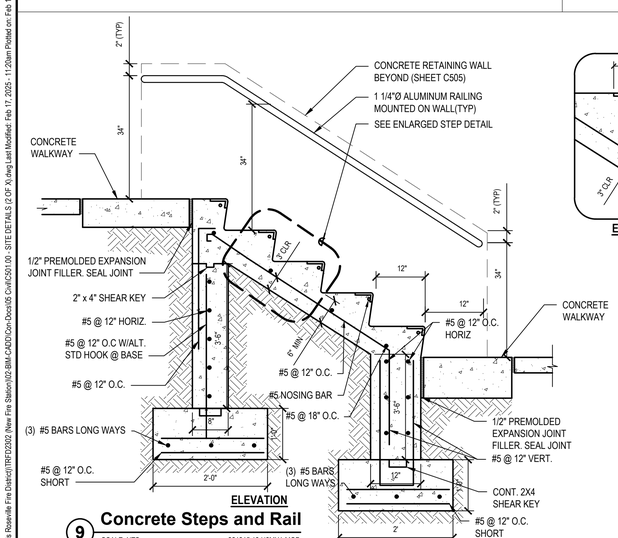

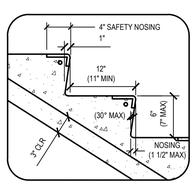

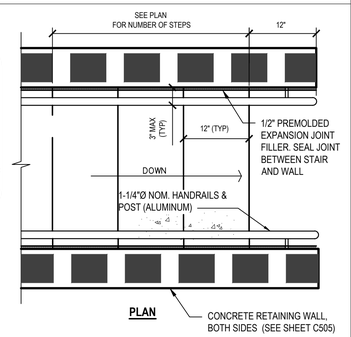

NOTES:

1. WOOD FLOAT AND BRUSH FINISH ON ALL SURFACES ABOVE GRADE.
2. SLOPE TREADS 1/8" PER FOOT (MAX) AWAY FROM RISER.
3. NOSING SHALL HAVE VISUAL CONTRAST FROM THE REMAINDER OF THE STAIR TREAD
4. INSTALL EXPANSION JOINTS AT LOCATION OF INTERMEDIATE RAILINGS
5. FOR TOTAL NUMBER OF STEPS AND STAIR WIDTH, SEE DIMENSIONAL SITE PLAN.
6. CONCRETE TO ACHIEVE 4,000 PSI STRENGTH AT 28 DAYS.
7. COMPACT SUBGRADE TO 95% OF MAXIMUM DENSITY ON ACCORDANCE WITH ASTM D698.
8. TREAD HEIGHT AND LENGTH SHALL BE UNIFORM FOR ALL STEPS.

9 Concrete Steps and Rail

SCALE: NTS 321315.13 H2MX1-MOD

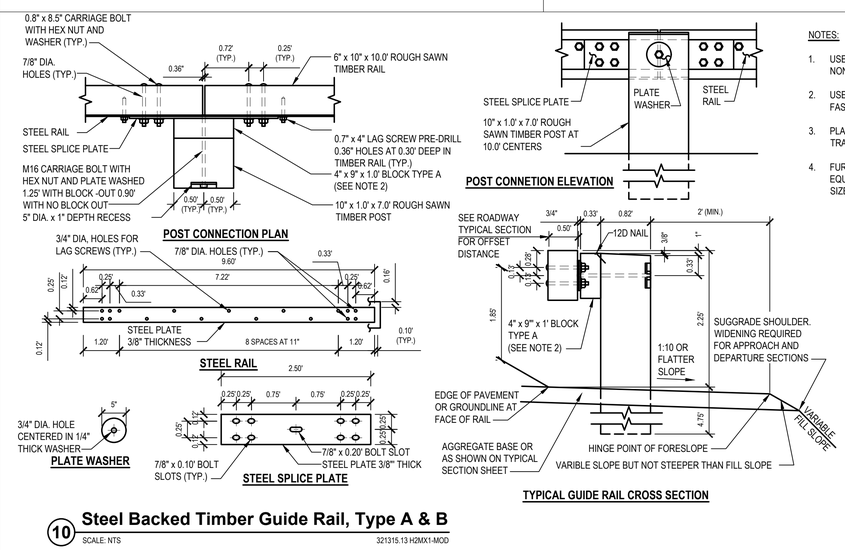

NOTES:

1. USE THE TYPE A, BLOCKED-OUT SYSTEM OR THE TYPE B, NON-BLOCKED OUT SYSTEM AS SPECIFIED.
2. USE WEATHERING STEAL FOR ALL STRUCTURAL STEEL AND FASTENER HARDWARE AS SPECIFIED.
3. PLACE TERMINAL SECTION ON BOTH APPROACH AND TRAILING ENDS OF BARRIER INSTALLATIONS.
4. FURNISH HARDWARE IN THE IMPERIAL SIZES SHOWN. EQUIVALENT METRIC SIZES MAY BE USED WHEN IMPERIAL SIZES ARE NOT AVAILABLE.

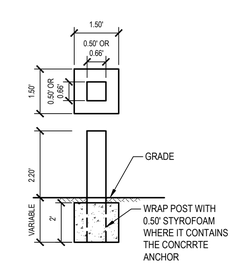

10 Steel Backed Timber Guide Rail, Type A & B

SCALE: NTS 321315.13 H2MX1-MOD

H2M architects + engineers

538 Broad Hollow Road, 4th Floor East
Melville, NY 11747
631.756.8000 • www.h2m.com
NY Architecture & Landscape Architecture: No Certificate Required
NY Engineering Certificate of Authorization No. 0018178

CONSULTANTS:

MARK	DATE	DESCRIPTION

STATE OF NEW YORK · DANIELLE A. DRAKE · 092596 · LICENSED PROFESSIONAL ENGINEER

DANIELLE A. DRAKE, P.E. — 08/31/2027 EXP. DATE
NY PROFESSIONAL ENGINEER Lic. No. 092596
"IN ACCORDANCE WITH ARTICLE 145, SECTION 7209 OF THE NYS EDUCATION LAW, ALTERATION OF THIS DOCUMENT EXCEPT BY LICENSE PROFESSIONAL IS ILLEGAL"

DESIGNED BY:	DRAWN BY:	CHECKED BY:	REVIEWED BY:
WHS	WHS	DAD	MRM
PROJECT No.: TRFD 2302	DATE: FEBRUARY 2025	SCALE: AS SHOWN	

CLIENT

THIELLS ROSEVILLE FIRE DISTRICT

NEW 26-100 FIRE HEADQUARTERS

THIELLS 26 FD

65 W RAMAPO RD
GARNERVILLE, NY 10923

CONTRACT

CONTRACT C
CIVIL CONSTRUCTION

STATUS

FINAL BID DOCUMENT

SHEET TITLE

SITE DETAILS
(2 OF 4)

DRAWING No.

C 501.00

X:\TRFD\Thiells Roseville Fire District\TRFD2302 (New Fire Station)\02-BIM-CADD\Civil\Dwgs\05 Civil\C501.00 - SITE DETAILS (2 OF X).dwg Last Modified: Feb 17, 2025 - 11:29am Plotted on: Feb 17, 2025 - 4:21pm By: wshz

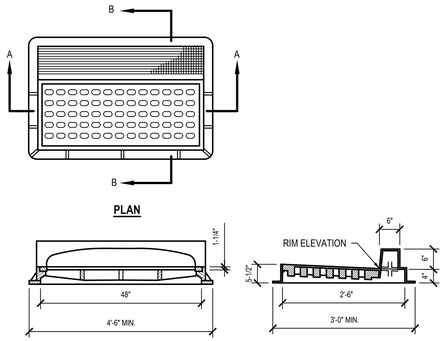

NOTE

1. CASTING MUST BE CAST IRON AND CAPABLE OF SUPPORTING AASHTO HS-20 HIGHWAY LOADING.
2. GRATE PATTERN TO BE BICYCLE SAFE.

1 Combination Inlet Frame & Grate - Heavy Duty

SCALE: NTS (334913.23 H2MX3)

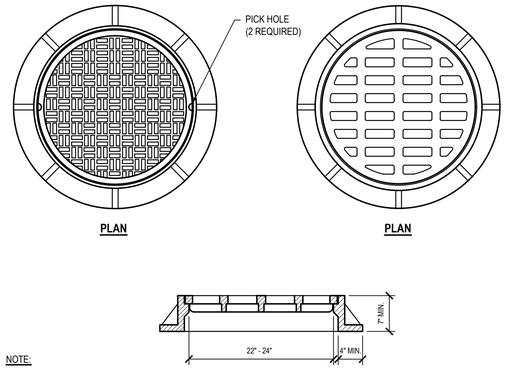

NOTE:

CASTINGS MUST BE CAST IRON CAPABLE OF SUPPORTING THE AASHTO HS-20 HIGHWAY LOADING.

2 Circular Frame & Cover or Grate - Heavy Duty

SCALE: NTS (334913.23 H2WMXS-MOD)

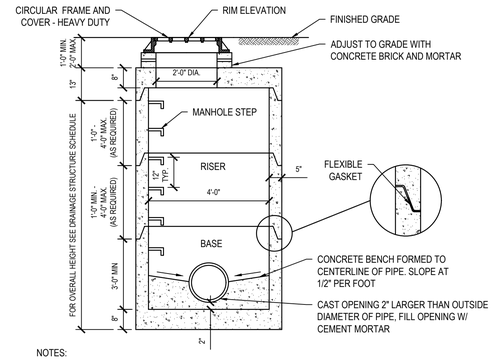

NOTES:

1. MANHOLE IS TO BE REINFORCED PRECAST CONCRETE AND CAPABLE OF SUPPORTING THE AASHTO HS-20 HIGHWAY LOADING.
2. MANHOLE CONSTRUCTION TO CONFORM TO ASTM C913
3. PROVIDE ADDITIONAL RISERS AS REQUIRED.
4. FLEXIBLE GASKET TO CONFORM TO THE REQUIREMENTS OF ASTM C990.

3 Drainage Manhole - 4 Foot Diameter

SCALE: NTS (334913.13 H2MX1)

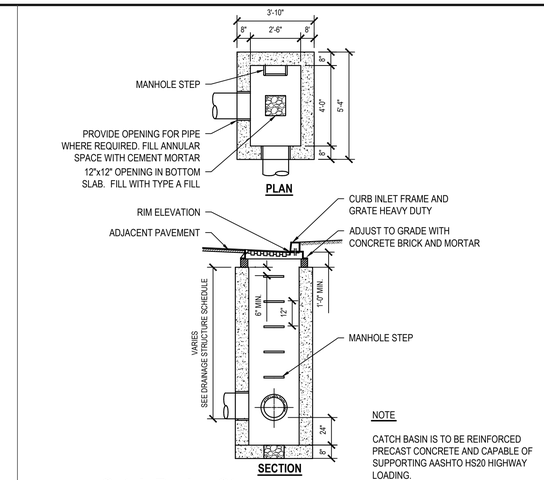

NOTE

CATCH BASIN IS TO BE REINFORCED PRECAST CONCRETE AND CAPABLE OF SUPPORTING AASHTO HS20 HIGHWAY LOADING.

4 Catch Basin - Standard

SCALE: NTS (334413.13 H2MX1)

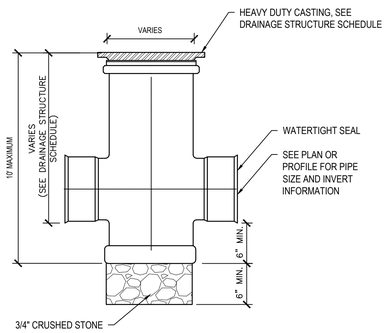

NOTES:

1. INLET TO BE PVC CONSTRUCTION MANUFACTURED BY NYLOPLAST OR APPROVED EQUIVALENT.
2. CASTING AND INLET TO BE SUPPLIED BY THE SAME MANUFACTURER.

5 Yard Inlet

SCALE: NTS (334413.16 H2MX1)

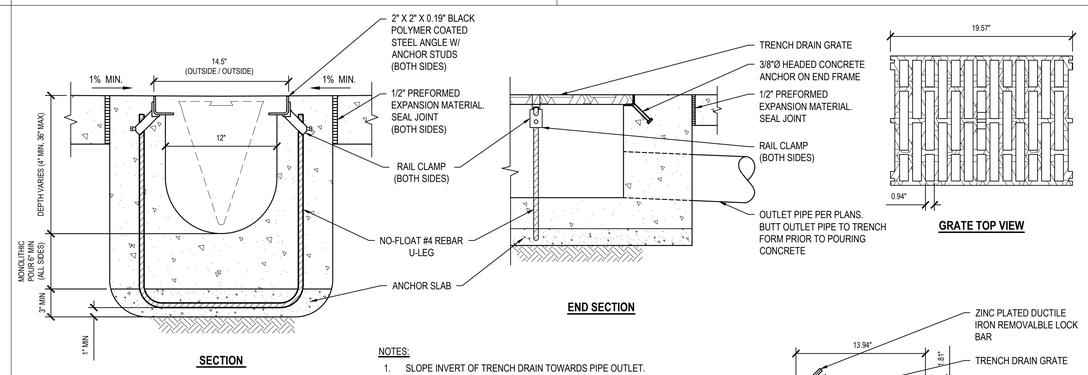

NOTES:

1. SLOPE INVERT OF TRENCH DRAIN TOWARDS PIPE OUTLET.
2. PROVIDE END SECTION AT UPSTREAM END OF TRENCH DRAIN.
3. CONCRETE TO ACHIEVE 4000 PSI STRENGTH AT 28 DAYS.
4. COMPACT SUBGRADE TO 95% MAXIMUM DENSITY IN ACCORDANCE WITH ASTM D1557.
5. TRENCH DRAIN TO BE FORMED USING PRE-ENGINEERED CONCRETE FORMING SYSTEM (TRENCHFORMER MHD) MANUFACTURED BY ABT, INC. OR APPROVED EQUIVALENT.
6. GRATE SHALL BE RATED FOR H-20 LOADING.
7. TRENCH DRAIN SHALL BE INSTALLED PER MANUFACTURERS SPECIFICATIONS.

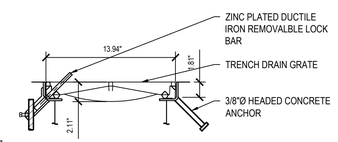

GRATE / FRAME ASSEMBLY
CROSS-SECTION

6 Heavy Duty Cast-In-Place Concrete Trench Drain

SCALE: NTS (XXXXXXX)

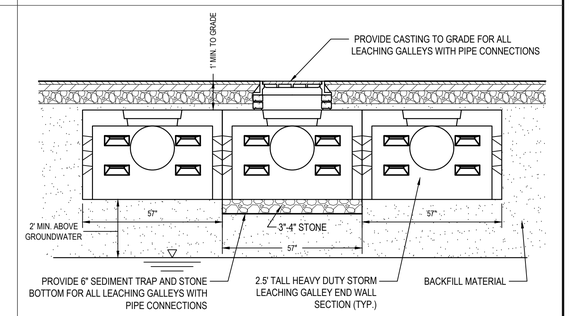

NOTES:

1. CONCRETE 4,000 PSI @ 28 DAYS
2. REBAR TO BE ASTM A-615 GRADE 60
3. WELDED WIRE FABRIC ASTM A-185
4. DESIGNED FOR AASHTO HS-20 LOADING
5. TOP SLAB AND WALL ARE MONOLITHIC
6. COLLAR MATERIALS TO CONSIST OF CLEAN SAND AND GRAVEL CONTAINING LESS THAN 15% FINE CLAY FRACTION NOT TO EXCEED 5%. NATIVE MATERIAL MAY BE REUSED IF IT MEETS THIS REQUIREMENT.
7. EXCAVATION TO PROVIDE A DIRECT CONNECTION BETWEEN BOTTOM OF GALLEYS AND A 6' MINIMUM STRATUM OF VIRGIN SAND AND GRAVEL. WHEN OVER EXCAVATION IS REQUIRED TO SATISFY THIS CRITERIA, ALL BACKFILL SHALL BE CLEANED SAND AND GRAVEL MEETING THE COLLAR SPECIFICATION
8. MAXIMIZE DEPTH OF 3 FOOT ANNULAR COLLAR BELOW BOTTOM OF GALLEYS WHEN OVER EXCAVATION IS REQUIRED .

7 Schematic Leaching Galley Section

SCALE: NTS

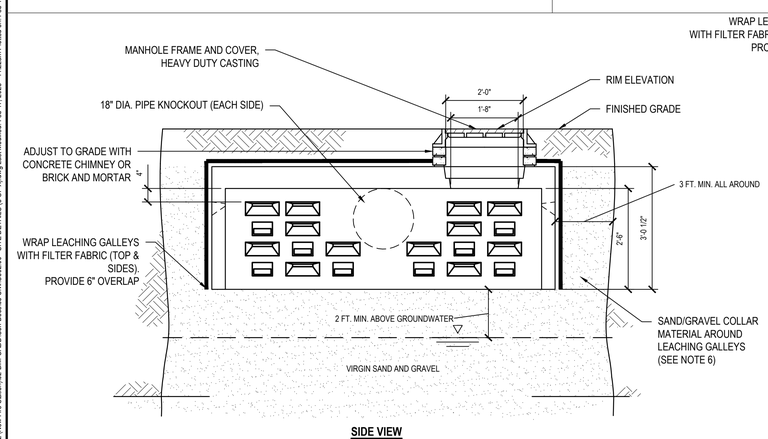

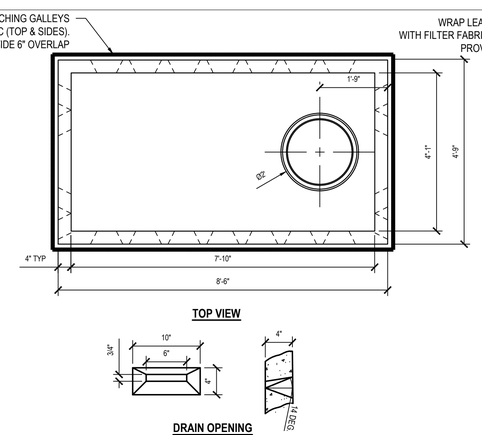

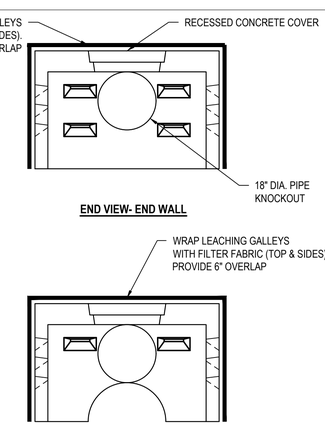

NOTES:

1. CONCRETE 4,000 PSI @ 28 DAYS
2. REBAR TO BE ASTM A-615 GRADE 60
3. WELDED WIRE FABRIC ASTM A-185
4. DESIGNED FOR AASHTO HS-20 LOADING
5. TOP SLAB AND WALL ARE MONOLITHIC
6. COLLAR MATERIALS TO CONSIST OF CLEAN SAND AND GRAVEL CONTAINING LESS THAN 15% FINE CLAY FRACTION NOT TO EXCEED 5%. NATIVE MATERIAL MAY BE REUSED IF IT MEETS THIS REQUIREMENT.
7. EXCAVATION TO PROVIDE A DIRECT CONNECTION BETWEEN BOTTOM OF GALLEYS AND A 6' MINIMUM STRATUM OF VIRGIN SAND AND GRAVEL. WHEN OVER EXCAVATION IS REQUIRED TO SATISFY THIS CRITERIA, ALL BACKFILL SHALL BE CLEANED SAND AND GRAVEL MEETING THE COLLAR SPECIFICATION
8. MAXIMIZE DEPTH OF 3 FOOT ANNULAR COLLAR BELOW BOTTOM OF GALLEYS WHEN OVER EXCAVATION IS REQUIRED .

8 2'-6" High Leaching Galley

SCALE: NTS

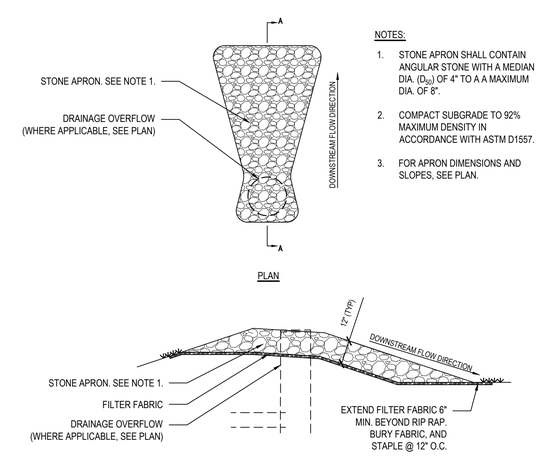

NOTES:

1. STONE APRON SHALL CONTAIN ANGULAR STONE WITH A MEDIAN DIA. (D_{50}) OF 4" TO A A MAXIMUM DIA. OF 8".
2. COMPACT SUBGRADE TO 92% MAXIMUM DENSITY IN ACCORDANCE WITH ASTM D1557.
3. FOR APRON DIMENSIONS AND SLOPES, SEE PLAN.

9 Rip Rap Apron

SCALE: NTS

H2M architects + engineers

538 Broad Hollow Road, 4th Floor East
Melville, NY 11747
631.756.8000 • www.h2m.com
NY Architecture & Landscape Architecture: No Certificate Required
NY Engineering Certificate of Authorization No. 0018178

CONSULTANTS:

MARK	DATE	DESCRIPTION

STATE OF NEW YORK · DANIELLE A. DRAKE · 092596 · LICENSED PROFESSIONAL ENGINEER

DANIELLE A. DRAKE, P.E. — 08/31/2027 DATE
NY PROFESSIONAL ENGINEER Lic. No. 092596
"IN ACCORDANCE WITH ARTICLE 145, SECTION 7209 OF THE NYS EDUCATION LAW, ALTERATION OF THIS DOCUMENT EXCEPT BY LICENSE PROFESSIONAL IS ILLEGAL"

DESIGNED BY:	DRAWN BY:	CHECKED BY:	REVIEWED BY:
WHS	WHS	DAD	MRM

PROJECT No.:	DATE:	SCALE:
TRFD 2302	FEBRUARY 2025	AS SHOWN

CLIENT

THIELLS ROSEVILLE FIRE DISTRICT

NEW 26-100 FIRE HEADQUARTERS

65 W RAMAPO RD GARNERVILLE, NY 10923

CONTRACT

CONTRACT C CIVIL CONSTRUCTION

STATUS

FINAL BID DOCUMENT

SHEET TITLE

SITE DETAILS (3 OF 4)

DRAWING No.

C 502.00

X:\TRFD (Thiells Roseville Fire District)\TRFD2302 (New Fire Station)\02-BIM-CADD\Civil\Dwg\05 Civil\C502.00 - SITE DETAILS (3 OF X).dwg Last Modified: Feb 17, 2025 - 11:22am Plotted on: Feb 17, 2025 - 4:21pm By: wsohl

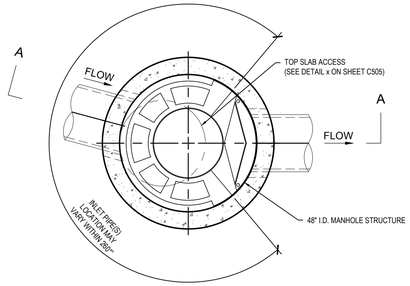

PLAN VIEW B-B
NOT TO SCALE

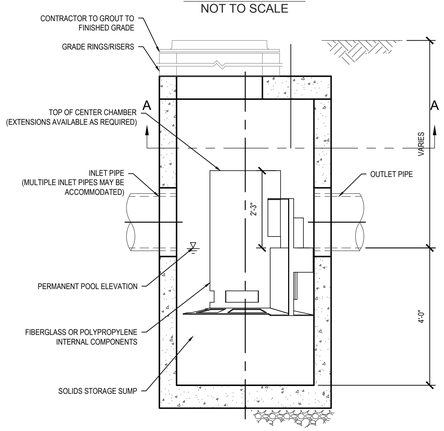

ELEVATION A-A
NOT TO SCALE

GENERAL NOTES
1. STRUCTURE TO BE CONTECH ENGINEERED SOLUTIONS LLC CASCADE SEPARATOR CS-4 OR APPROVED EQUAL.
2. CONTECH TO PROVIDE ALL MATERIALS UNLESS NOTED OTHERWISE.
3. CASCADE SEPARATOR STRUCTURE SHALL BE PRECAST CONCRETE CONFORMING TO ASTM C478 AND AASHTO LOAD FACTOR DESIGN METHOD.
4. ANY SUB-BASE, BACKFILL DEPTH, AND/OR ANTI-FLOTATION PROVISIONS ARE SITE-SPECIFIC DESIGN CONSIDERATIONS AND SHALL BE SPECIFIED BY ENGINEER OF RECORD.
5. CONTRACTOR TO PROVIDE EQUIPMENT WITH SUFFICIENT LIFTING AND REACH CAPACITY TO LIFT AND SET THE CASCADE SEPARATOR MANHOLE STRUCTURE.
6. CONTRACTOR TO INSTALL JOINT SEALANT BETWEEN ALL STRUCTURE SECTIONS AND ASSEMBLE STRUCTURE.
7. CONTRACTOR TO PROVIDE, INSTALL, AND GROUT INLET AND OUTLET PIPE(S). MATCH PIPE INVERTS WITH ELEVATIONS SHOWN. ALL PIPE CENTERLINES TO MATCH PIPE OPENING CENTERLINES.
8. CONTRACTOR TO TAKE APPROPRIATE MEASURES TO ASSURE UNIT IS WATER TIGHT, HOLDING WATER TO FLOWLINE INVERT MINIMUM. IT IS SUGGESTED THAT ALL JOINTS BELOW PIPE INVERTS ARE GROUTED.

3 Hydrodynamic Seperator (CS-4)
SCALE: NTS

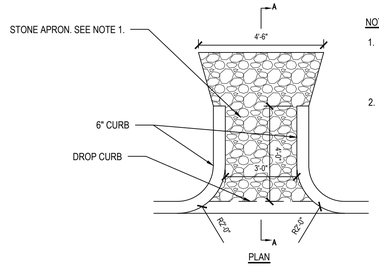

NOTES:
1. STONE APRON SHALL CONTAIN ANGULAR STONE WITH A MEDIAN DIA. (D_{50}) OF 4" TO A A MAXIMUM DIA. OF 8".
2. COMPACT SUBGRADE TO 92% MAXIMUM DENSITY IN ACCORDANCE WITH ASTM D1557.

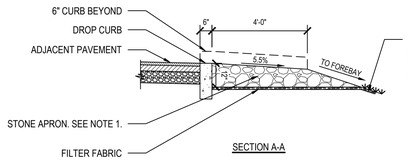

1 Rip Rap Apron at Drop Curb
SCALE: NTS

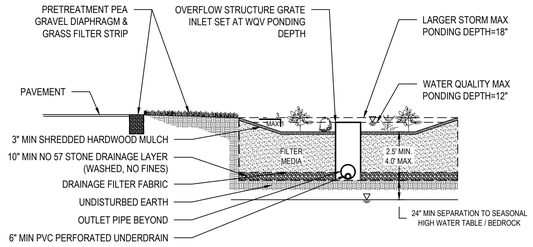

2 Filtration Bioretention Area
SCALE: NTS

NOTES:
1. BIORETENTION FACILITIES SHALL BE INSTALLED AND MAINTAINED IN ACCORDANCE WITH "VOLUME 5 - LOW IMPACT DEVELOPMENT STORMWATER MANAGEMENT MANUAL" AS PREPARED BY THE MRETOPOLITAN GOVERNMENT NASHVILLE AND DAVIDSON COUNTY (MWS).
2. DRAINAGE AREA TRIBUTARY TO THE BIORETENTION MUST BE FULLY STABILIZED, PRIOR TO CONSTRUCTION OF BIORETENTION AREAS.
3. BACK FILLING OF BIORETENTION FACILITY SHALL BE PLACED IN 12" LIFTS.
4. PLANTING SOIL MATERIAL SHALL BE USDA SOIL TYPES LOAMY SAND, SANDY LOAM OR LOAM, CONTAINING 60% SAND, LESS THAN 30% SILT, 5 TO 10% ORGANIC MATTER AND LESS THAN 10% CLAY. FINAL MATERIAL SHALL BE APPROVED BY THE ENGINEER AND SHALL MEET THE FOLLOWING CRITERIA:

PH RANGE	5.2-7.0
ORGANIC MATTER	5-10%
MAGNESIUM	35 LB/AC
PHOSPHOROUS P_2O_5	75LB/AC
POTASSIUM K_2O	85LB/AC
SOLUBLE SALTS	NOT TO EXCEED 500PPM
CEC	> 10 meq/100 mL

5. PLANTING SOIL MATERIAL SHALL NOT CONTAIN THE FOLLOWING:
   5.1. UNACCEPTABLE MATERIALS: CONCRETE SLURRY, CONCRETE LAYERS OR CHUNKS, CEMENT, PLASTER, BUILDING DEBRIS, ASPHALT, BRICKS, OILS, GASOLINE, DIESEL FUEL, PAIN THINNER, TURPENTINE, TAT, ROOFING COMPOUND, ACID, SOLID WASTE, AND OTHER EXTRANEOUS MATERIALS THAT ARE HARMFUL TO PLANT GROWTH.
   5.2. UNSUITABLE MATERIALS: STONES, ROOTS, PLANTS, SOD, CLAY LUMPS, AND POCKETS OF COARSE SAND THAT EXCEED A COMBINED MAXIMUM OF 5 PERCENT BY DRY WEIGHT OF THE MANUFACTURED SOIL.
   5.3. LARGE MATERIALS: STONES, CLODS, ROOTS, CLAY LUMPS, AND POCKETS OF COARSE SAND EXCEEDING 0.187" (7.76 mm) IN ANY DIMENSION.
6. HARDWOOD MULCH SHALL BE AGED FOR A MINIMUM OF 6 MONTHS, PRIOR TO INSTALL.
7. ROTOTILL 2-3" OF SAND BASE INTO THE BASE OF THE BIORETENTION FACILITY.
8. NON-WOVEN GEOTEXTILE SHALL HAVE FLOW RATE > 100 GAL./MIN./FT SQUARE

NOTES:
1. GREASE TRAP IS TO BE REINFORCED PRECAST CONCRETE AND CAPABLE OF SUPPORTING AASHTO HS-20 HIGHWAY LOADING.
2. SEAL PIPE OPENINGS WITH NON-SHRINK GROUT.
3. JOINT SEALANT TO MEET ASTM C990.

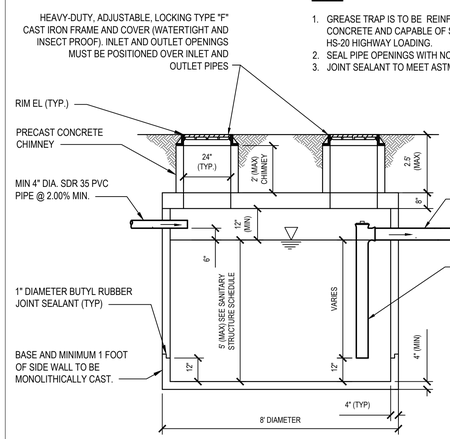

4 Sanitary Grease Trap - Single unit - 8' Diameter
SCALE: NTS (333639.00 SUFF1)

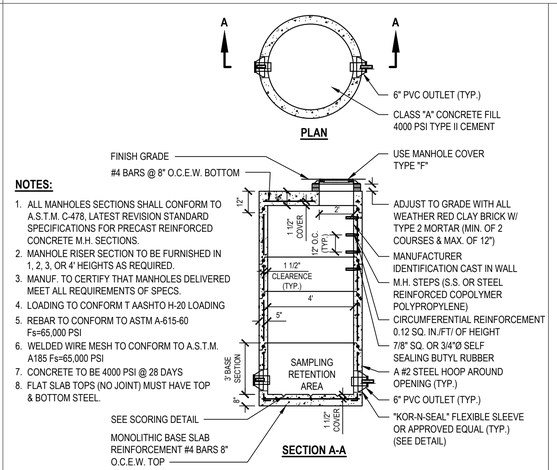

NOTES:
1. ALL MANHOLES SECTIONS SHALL CONFORM TO A.S.T.M. C-478, LATEST REVISION STANDARD SPECIFICATIONS FOR PRECAST REINFORCED CONCRETE M.H. SECTIONS.
2. MANHOLE RISER SECTION TO BE FURNISHED IN 1, 2, 3, OR 4' HEIGHTS AS REQUIRED.
3. MANUF. TO CERTIFY THAT MANHOLES DELIVERED MEET ALL REQUIREMENTS OF SPECS.
4. LOADING TO CONFORM T AASHTO H-20 LOADING
5. REBAR TO CONFORM TO ASTM A-615-60 Fs=65,000 PSI
6. WELDED WIRE MESH TO CONFORM TO A.S.T.M. A185 Fs=65,000 PSI
7. CONCRETE TO BE 4000 PSI @ 28 DAYS
8. FLAT SLAB TOPS (NO JOINT) MUST HAVE TOP & BOTTOM STEEL.

Sewer Access Port With Sampling Retention Area
5 NTS

"USE WHERE SEWER INVERT IS DEEPER THAN 4' BELOW GRADE"

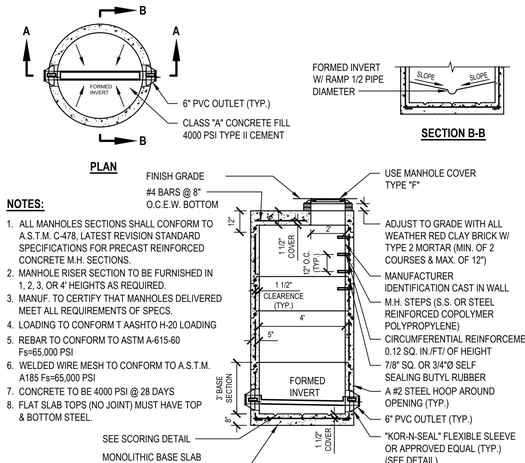

NOTES:
1. ALL MANHOLES SECTIONS SHALL CONFORM TO A.S.T.M. C-478, LATEST REVISION STANDARD SPECIFICATIONS FOR PRECAST REINFORCED CONCRETE M.H. SECTIONS.
2. MANHOLE RISER SECTION TO BE FURNISHED IN 1, 2, 3, OR 4' HEIGHTS AS REQUIRED.
3. MANUF. TO CERTIFY THAT MANHOLES DELIVERED MEET ALL REQUIREMENTS OF SPECS.
4. LOADING TO CONFORM T AASHTO H-20 LOADING
5. REBAR TO CONFORM TO ASTM A-615-60 Fs=65,000 PSI
6. WELDED WIRE MESH TO CONFORM TO A.S.T.M. A185 Fs=65,000 PSI
7. CONCRETE TO BE 4000 PSI @ 28 DAYS
8. FLAT SLAB TOPS (NO JOINT) MUST HAVE TOP & BOTTOM STEEL.

6 Sewer Access Port With Formed Invert
NTS

"USE WHERE SEWER INVERT IS DEEPER THAN 4' BELOW GRADE"

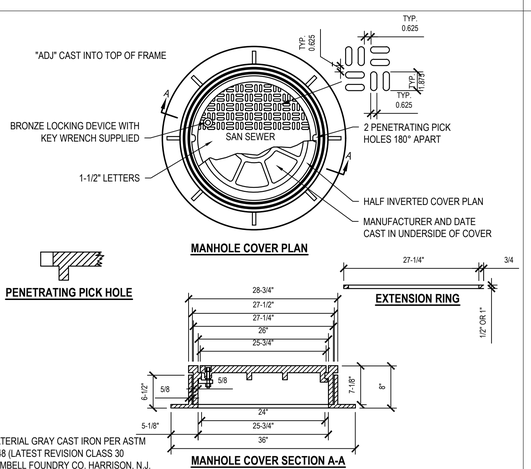

MATERIAL GRAY CAST IRON PER ASTM A-48 (LATEST REVISION CLASS 30 CAMBELL FOUNDRY CO. HARRISON, N.J. 07029 (OR EQUAL) PATTERN NO. 17341010

7 Type "F" Adjustable Manhole Casting
SCALE: NTS SPECIFICATION #

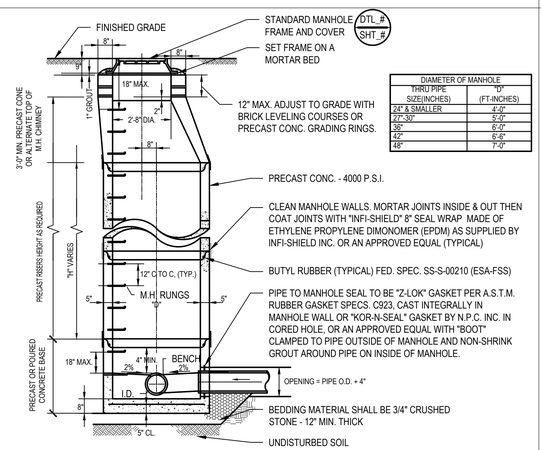

DIAMETER OF MANHOLE	
THRU PIPE SIZE(INCHES)	"D" (FT-INCHES)
24" & SMALLER	4'-0"
27"-30"	5'-0"
36"	6'-0"
42"	6'-6"
48"	7'-0"

Rockland County Standard Detail Precast Manhole Section
8 SCALE: NTS

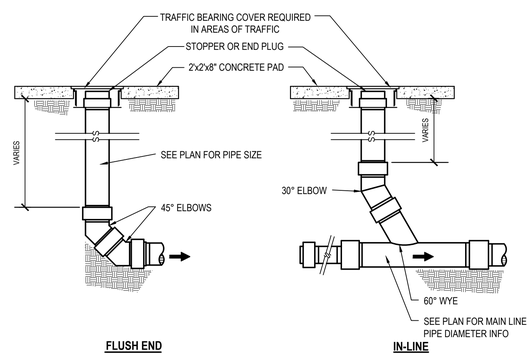

9 Sanitary Cleanout
SCALE: NTS (333923.00 SUFF1)

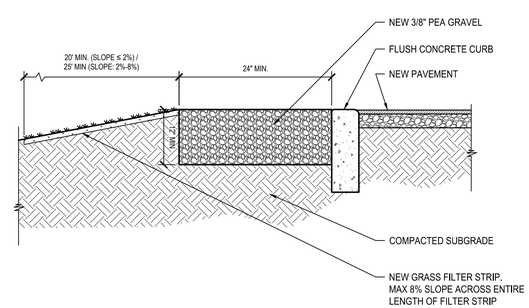

NOTE:
COMPACT SUBGRADE TO 92% MAXIMUM DENSITY IN ACCORDANCE WITH ASTM D1557.

10 Pea Gravel Diaphragm & Grass Filter Strip
NTS

H2M architects + engineers
538 Broad Hollow Road, 4th Floor East
Melville, NY 11747
631.756.8000 • www.h2m.com
NY Architecture & Landscape Architecture: No Certificate Required
NY Engineering Certificate of Authorization No. 0018178

CONSULTANTS:

MARK	DATE	DESCRIPTION

STATE OF NEW YORK · DANIELLE A. DRAKE · 092596 · LICENSED PROFESSIONAL ENGINEER

DANIELLE A. DRAKE, P.E.
NY PROFESSIONAL ENGINEER Lic. No. 092596

08/31/2027 DATE

"IN ACCORDANCE WITH ARTICLE 145, SECTION 7209 OF THE NYS EDUCATION LAW, ALTERATION OF THIS DOCUMENT EXCEPT BY LICENSE PROFESSIONAL IS ILLEGAL"

DESIGNED BY:	DRAWN BY:	CHECKED BY:	REVIEWED BY:
WHS	WHS	DAD	MRM

PROJECT No.:	DATE:	SCALE:
TRFD 2302	FEBRUARY 2025	AS SHOWN

CLIENT
THIELLS ROSEVILLE FIRE DISTRICT

NEW 26-100 FIRE HEADQUARTERS

65 W RAMAPO RD GARNERVILLE, NY 10923

CONTRACT
CONTRACT C CIVIL CONSTRUCTION

STATUS
FINAL BID DOCUMENT

SHEET TITLE
SITE DETAILS (4 OF 4)

DRAWING No.
C 503.00

X:\TRFD\[Thiells Roseville Fire District]\TRF02302 New Fire Station\02-BIM-CADD\Con-Docs\05 Civil\C503.00 - SITE DETAILS (4 OF X).dwg Last Modified: Feb 17, 2025 - 12:10pm Plotted on: Feb 17, 2025 - 4:22pm By: wsotz

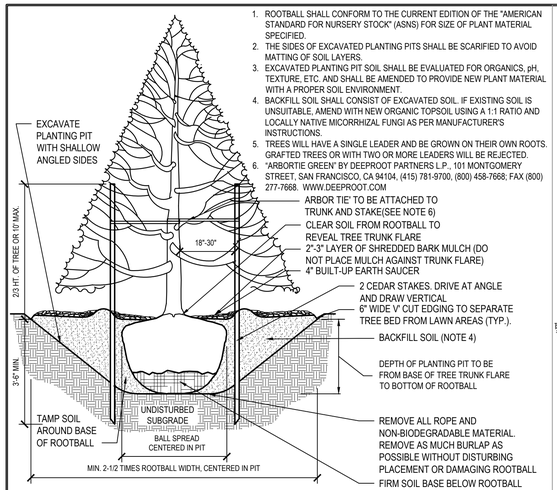

1. ROOTBALL SHALL CONFORM TO THE CURRENT EDITION OF THE "AMERICAN STANDARD FOR NURSERY STOCK" (ASNS) FOR SIZE OF PLANT MATERIAL SPECIFIED.
2. THE SIDES OF EXCAVATED PLANTING PITS SHALL BE SCARIFIED TO AVOID MATTING OF SOIL LAYERS.
3. EXCAVATED PLANTING PIT SOIL SHALL BE EVALUATED FOR ORGANICS, pH, TEXTURE, ETC. AND SHALL BE AMENDED TO PROVIDE NEW PLANT MATERIAL WITH A PROPER SOIL ENVIRONMENT.
4. BACKFILL SOIL SHALL CONSIST OF EXCAVATED SOIL. IF EXISTING SOIL IS UNSUITABLE, AMEND WITH NEW ORGANIC TOPSOIL USING A 1:1 RATIO AND LOCALLY NATIVE MICORRHIZAL FUNGI AS PER MANUFACTURER'S INSTRUCTIONS.
5. TREES WILL HAVE A SINGLE LEADER AND BE GROWN ON THEIR OWN ROOTS. GRAFTED TREES OR WITH TWO OR MORE LEADERS WILL BE REJECTED.
6. 'ARBORTIE GREEN' BY DEEPROOT PARTNERS L.P., 101 MONTGOMERY STREET, SAN FRANCISCO, CA 94104, (415) 781-9700, (800) 458-7668; FAX (800) 277-7668. WWW.DEEPROOT.COM

1 Evergreen Tree Planting with Stakes

SCALE: NTS (329343.00 H2M X2)

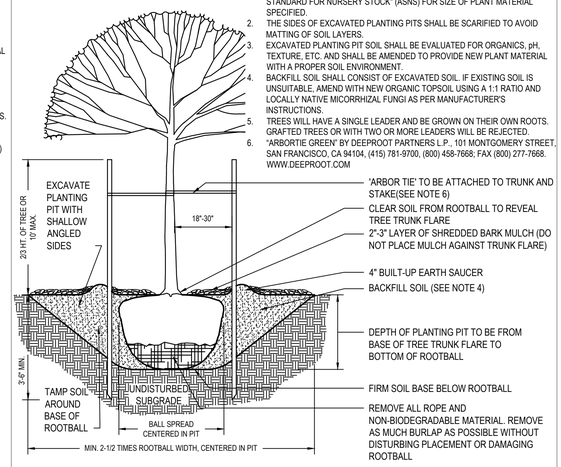

1. ROOTBALL SHALL CONFORM TO THE CURRENT EDITION OF THE "AMERICAN STANDARD FOR NURSERY STOCK" (ASNS) FOR SIZE OF PLANT MATERIAL SPECIFIED.
2. THE SIDES OF EXCAVATED PLANTING PITS SHALL BE SCARIFIED TO AVOID MATTING OF SOIL LAYERS.
3. EXCAVATED PLANTING PIT SOIL SHALL BE EVALUATED FOR ORGANICS, pH, TEXTURE, ETC. AND SHALL BE AMENDED TO PROVIDE NEW PLANT MATERIAL WITH A PROPER SOIL ENVIRONMENT.
4. BACKFILL SOIL SHALL CONSIST OF EXCAVATED SOIL. IF EXISTING SOIL IS UNSUITABLE, AMEND WITH NEW ORGANIC TOPSOIL USING A 1:1 RATIO AND LOCALLY NATIVE MICORRHIZAL FUNGI AS PER MANUFACTURER'S INSTRUCTIONS.
5. TREES WILL HAVE A SINGLE LEADER AND BE GROWN ON THEIR OWN ROOTS. GRAFTED TREES OR WITH TWO OR MORE LEADERS WILL BE REJECTED.
6. 'ARBORTIE GREEN' BY DEEPROOT PARTNERS L.P., 101 MONTGOMERY STREET, SAN FRANCISCO, CA 94104, (415) 781-9700, (800) 458-7668; FAX (800) 277-7668. WWW.DEEPROOT.COM

2 Deciduous Tree Planting with Stakes

NTS (329343.00 H2M X2)

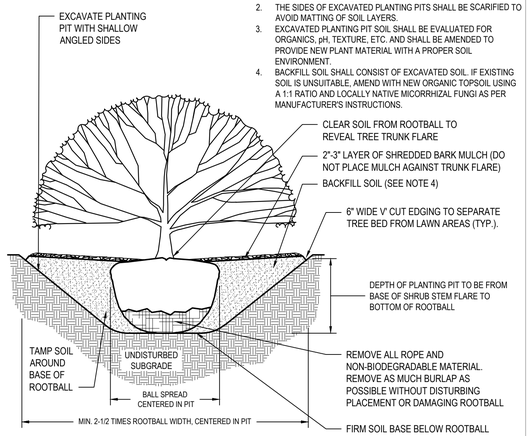

1. ROOTBALL SHALL CONFORM TO THE CURRENT EDITION OF THE "AMERICAN STANDARD FOR NURSERY STOCK" (ASNS) FOR SIZE OF PLANT MATERIAL SPECIFIED.
2. THE SIDES OF EXCAVATED PLANTING PITS SHALL BE SCARIFIED TO AVOID MATTING OF SOIL LAYERS.
3. EXCAVATED PLANTING PIT SOIL SHALL BE EVALUATED FOR ORGANICS, pH, TEXTURE, ETC. AND SHALL BE AMENDED TO PROVIDE NEW PLANT MATERIAL WITH A PROPER SOIL ENVIRONMENT.
4. BACKFILL SOIL SHALL CONSIST OF EXCAVATED SOIL. IF EXISTING SOIL IS UNSUITABLE, AMEND WITH NEW ORGANIC TOPSOIL USING A 1:1 RATIO AND LOCALLY NATIVE MICORRHIZAL FUNGI AS PER MANUFACTURER'S INSTRUCTIONS.

3 Decidious Shrub Planting

SCALE: NTS 329300.01 H2M1

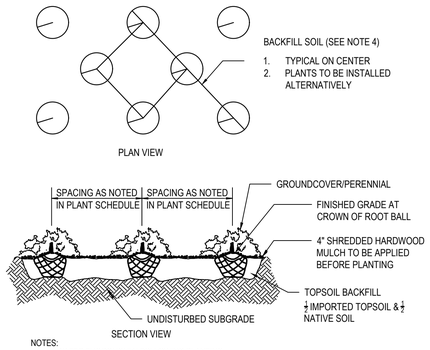

NOTES:
1. WATER THOROUGHLY FOLLOWING PLANTING.
2. AVOID DAMAGE TO ROOTS STRUCTURE IN HANDLING AND PLANTING.
3. REMOVE ALL CONTAINERS UNLESS PLANTABLE.
4. SET PLANT MATERIAL AT ORIGINAL SOIL LEVEL.
5. PLANTABLE CONTAINERS SHOULD HAVE UPPER 1/3 REMOVED AND BE SLIT CAREFULLY AT SIDES AND BOTTOM.

4 Perennial Planting

NTS

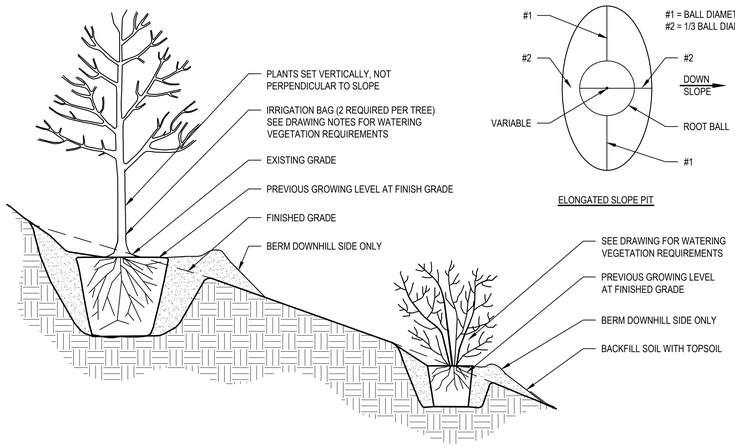

5 Planting Tree / Shrub on Slope

SCALE: NTS 329300.01 H2M1

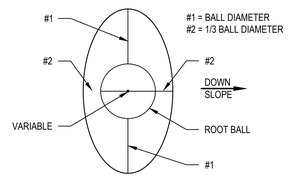

ELONGATED SLOPE PIT

NOTE:

1. ELONGATED PITS MAY BE USED ON SLOPES AS DIRECTED BY THE ENGINEER. RECTANGULAR OR SQUARE PITS ARE ACCEPTABLE PROVIDED THEY ACCOMMODATE THE PLANTS AS SHOWN.

H2M architects + engineers

538 Broad Hollow Road, 4th Floor East
Melville, NY 11747
631.756.8000 • www.h2m.com
NY Architecture & Landscape Architecture: No Certificate Required
NY Engineering Certificate of Authorization No. 0018178

CONSULTANTS:

MARK	DATE	DESCRIPTION

LICENSED LANDSCAPE ARCHITECT KENNETH ADAM KELTAI No. 001951 STATE OF NEW YORK

KENNETH A. KELTAI, R.L.A. — EXP. DATE 02/28/2025
NY REGISTERED LANDSCAPE ARCHITECT Lic. No. 001951
"IN ACCORDANCE WITH ARTICLE 145, SECTION 7209 OF THE NYS EDUCATION LAW, ALTERATION OF THIS DOCUMENT EXCEPT BY LICENSE PROFESSIONAL IS ILLEGAL"

DESIGNED BY:	DRAWN BY:	CHECKED BY:	REVIEWED BY:
MCB/KAK	MCB	KAK	RJR
PROJECT No.: TRFD 2302	DATE: FEBRUARY 2025	SCALE: AS SHOWN	

CLIENT

THIELLS ROSEVILLE FIRE DISTRICT

NEW 26-100 FIRE HEADQUARTERS

65 W RAMAPO RD GARNERVILLE, NY 10923

CONTRACT

CONTRACT C CIVIL CONSTRUCTION

STATUS

FINAL BID DOCUMENT

SHEET TITLE

LANDSCAPE DETAILS

DRAWING No.

C 504.00

\\h2m.com\shares\Projects\TRFD (Thiells Roseville Fire District)\TRF02302 (New Fire Station)\02-BIM-CADD\Con-Docs\05 Civil\C504.00 - LANDSCAPE DETAILS.dwg Last Modified: Jan 06, 2025 - 3:47pm Plotted on: Feb 17, 2025 - 4:27pm By: mcolon,kelsalla

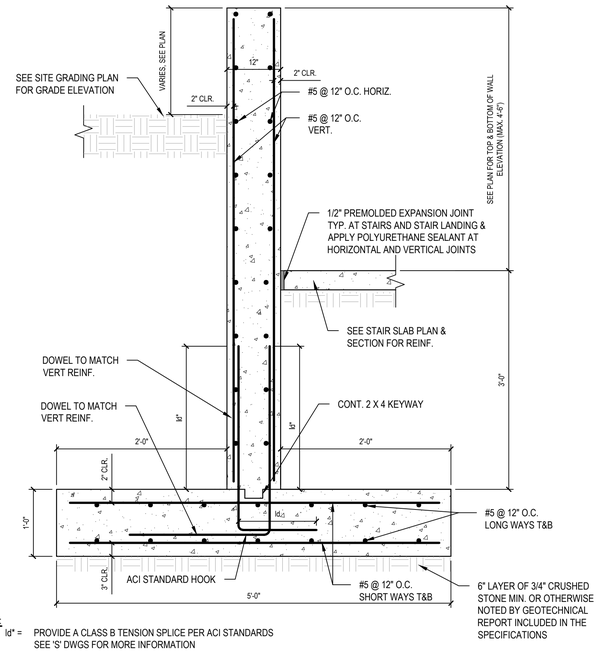

NOTE:
1) ld* = PROVIDE A CLASS B TENSION SPLICE PER ACI STANDARDS SEE 'S' DWGS FOR MORE INFORMATION

2) SEE STRUCTURAL DRAWINGS FOR STEP FOOTING DETAILS AND STEP WALL FOOTINGS WHERE BOTTOM OF WALL TRANSITIONS OCCUR ON SITE GRADING PLAN.

1 Typical Retaining Wall Detail
SCALE: NTS

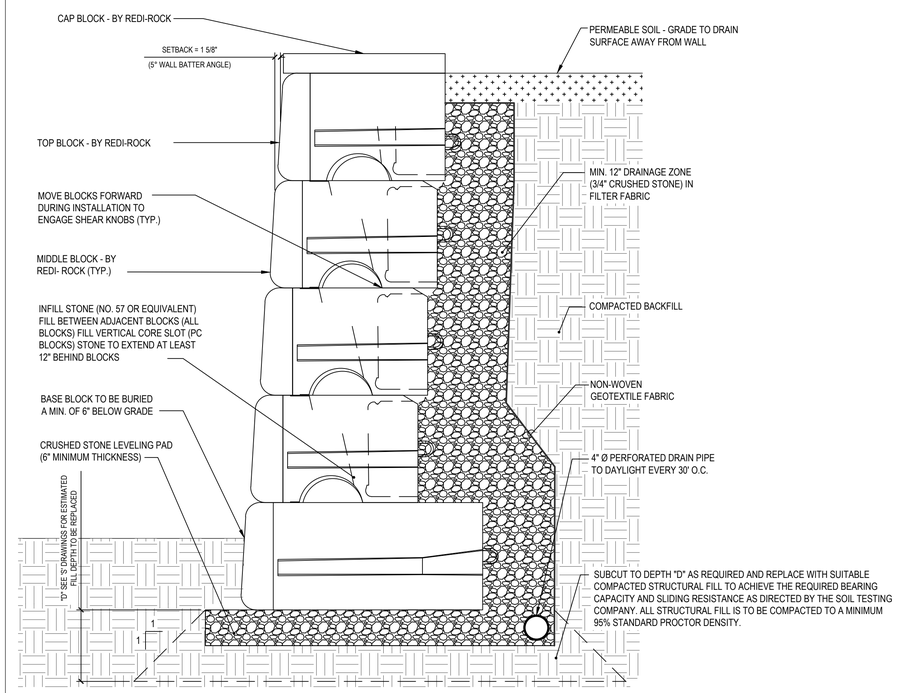

NOTE:
THIS DETAIL IS FOR REFERENCE ONLY. DETERMINATION OF THE SUITABILITY AND/OR MANNER OF USE OF THIS DETAIL IS THE SOLE RESPONSIBILITY OF A DELEGATED DESIGNER RETAINED BY THE CONTRACTOR. FINAL DESIGN, INCLUDING ALL CONSTRUCTION DETAILS, SHALL BE PREPARED BY THE DELEGATED DESIGNER. FINAL WALL DESIGN MUST ADDRESS BOTH INTERNAL & EXTERNAL DRAINAGE, ALL MODES OF WALL STABILITY, AND INFLUENCE OF TOP TIER REDI-ROCK WALL. THE DELEGATED DESIGN ENGINEER SHALL SUBMIT SIGNED & SEALED CALCULATIONS & DRAWINGS COMPLETED BY A NYS REGISTERED ENGINEER FOR THE E.O.R. REVIEW.

2 Typical Retaining Wall Section - Redi-Rock
SCALE: N.T.S.

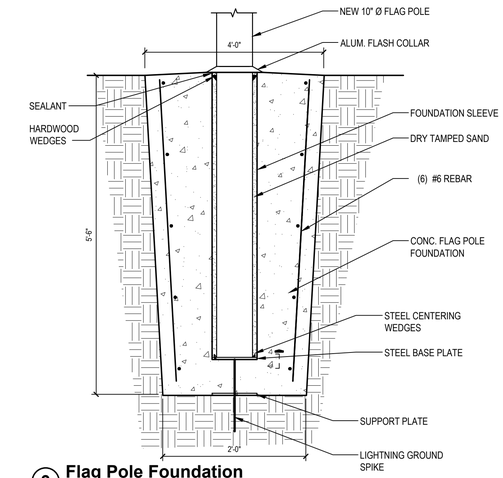

3 Flag Pole Foundation
SCALE: NTS

H2M architects + engineers

538 Broad Hollow Road, 4th Floor East
Melville, NY 11747
631.756.8000 • www.h2m.com
NY Architecture & Landscape Architecture: No Certificate Required
NY Engineering Certificate of Authorization No. 0018178

CONSULTANTS:

MARK	DATE	DESCRIPTION

STATE OF NEW YORK · DANIEL J. AIELLO · 100515 · LICENSED PROFESSIONAL ENGINEER

04/30/2027
EXP. DATE

DANIEL J. AIELLO, P.E.
NY PROFESSIONAL ENGINEER Lic. No. 100515

"IN ACCORDANCE WITH ARTICLE 145, SECTION 7209 OF THE NYS EDUCATION LAW, ALTERATION OF THIS DOCUMENT EXCEPT BY LICENSE PROFESSIONAL IS ILLEGAL"

DESIGNED BY:	DRAWN BY:	CHECKED BY:	REVIEWED BY:
JJN	JJN	DJA	DJA

PROJECT No.:	DATE:	SCALE:
TRFD 2302	FEBRUARY 2025	AS SHOWN

CLIENT
THIELLS ROSEVILLE FIRE DISTRICT

NEW 26-100 FIRE HEADQUARTERS

THIELLS 26 FD

65 W RAMAPO RD
GARNERVILLE, NY 10923

CONTRACT
CONTRACT C
CIVIL CONSTRUCTION

STATUS
FINAL BID DOCUMENT

SHEET TITLE
STRUCTURAL SITE DETAILS

DRAWING No.
C 505.00

C:\Users\weiqi\Dropbox\Work\Local\Temp\AcPublish_22064\C505.00 - STRUCTURAL SITE DETAILS.dwg Last Modified: Feb 21, 2025 - 11:33am Plotted on: Feb 21, 2025 - 11:40am By: weiqiz

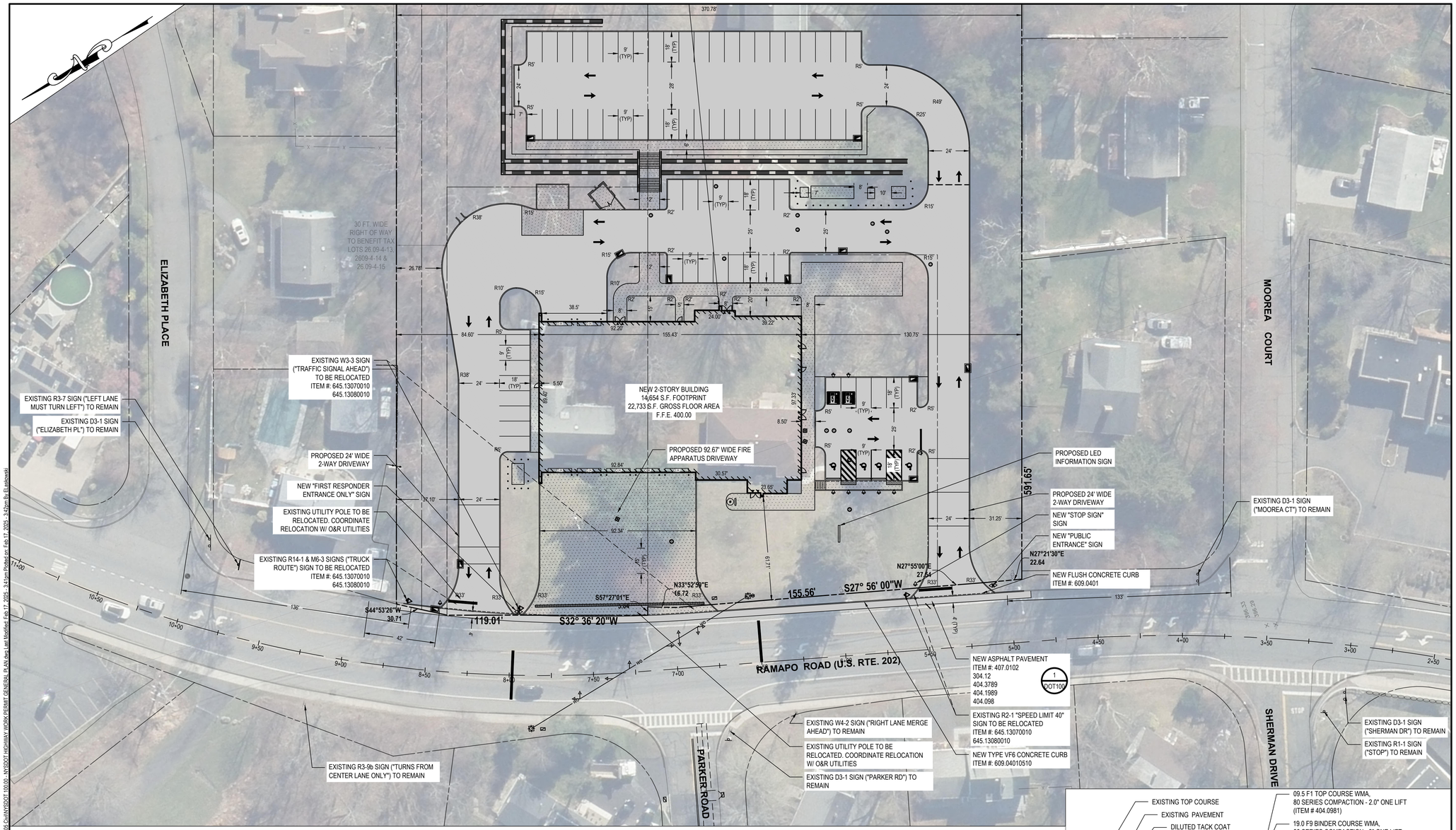

GRAPHIC SCALE

30 0 15 30

(IN FEET)
1 inch = 30 ft.

SITE DATA

RCTM: 26.09-4-11,12,13,14,15
ZONE: R15 - MEDIUM DENSITY RESIDENCE DISTRICT / ROUTE 202 FLOATING OVERLAY DISTRICT
PROPOSED USE: FIRE STATION
SITE AREA: 213,918 SF / 4.91 ACRES

PLAN NOTES:

1. EXISTING SURVEY PREPARED BY ATZL, NASHER & ZIGLER P.C. DATED 12/19/2023.
2. AERIAL IMAGERY PROVIDED BY NYSGIS DATA, LAST UPDATED IN 2023. IMAGERY SHOWN FOR INFORMATIONAL PURPOSES ONLY.

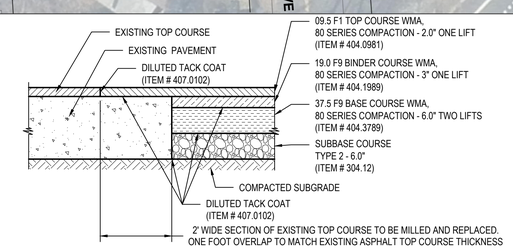

NOTE:
1. COMPACT SUBGRADE TO AT LEAST 95% MAXIMUM DENSITY AS DETERMINED BY THE STANDARD PROCTOR (ASTM D-698).
2. NYSDOT PAVEMENT THICKNESS = 16.7"
3. TACK COAT REQUIRED BETWEEN ALL LIFTS REGARDLESS WHEN PLACES.
4. PROPOSED MILLING OF TOP ASPHALT SHOULD EXTEND 1'-0" OVER EXISTING ASPHALT PAVEMENT
5. ALL COLD JOINTS TO BE SEALED WITH ITEM NUMBER 402.76020008
6. TACK COAT REQUIRED BETWEEN ALL LIFTS AND JOINTS, REGARDLESS OF WHEN PLACES

NYSDOT Roadway Asphalt Pavement Restoration Detail
1 NTS

811 1-800-962-7962
Dig Safely. New York
Call811
before you dig
www.digsafelynewyork.com

PENDING NYSDOT APPROVAL

H2M architects + engineers
538 Broad Hollow Road, 4th Floor East
Melville, NY 11747
631.756.8000 • www.h2m.com
NY Architecture & Landscape Architecture: No Certificate Required
NY Engineering Certificate of Authorization No. 0018178

MARK	DATE	DESCRIPTION

STATE OF NEW YORK · DANIELLE A. DRAKE · 092596 · LICENSED PROFESSIONAL ENGINEER

DANIELLE A. DRAKE, P.E.
NY PROFESSIONAL ENGINEER Lic. No. 092596
08/31/2027 EXP. DATE
"IN ACCORDANCE WITH ARTICLE 145, SECTION 7209 OF THE NYS EDUCATION LAW, ALTERATION OF THIS DOCUMENT EXCEPT BY LICENSE PROFESSIONAL IS ILLEGAL"

DESIGNED BY:	DRAWN BY:	CHECKED BY:	REVIEWED BY:
WHS	WHS	DAD	MRM

PROJECT No.:	DATE:	SCALE:
TRFD 2302	FEBRUARY 2025	AS SHOWN

CLIENT

THIELLS ROSEVILLE FIRE DISTRICT

NEW 26-100 FIRE HEADQUARTERS

THIELLS 26 FD

65 W RAMAPO RD
GARNERVILLE, NY 10923

CONTRACT

CONTRACT C
CIVIL CONSTRUCTION

STATUS

FINAL BID DOCUMENT

SHEET TITLE

NYSDOT GENERAL ROADWAY WORK PLAN

DRAWING No.

DOT 100.00

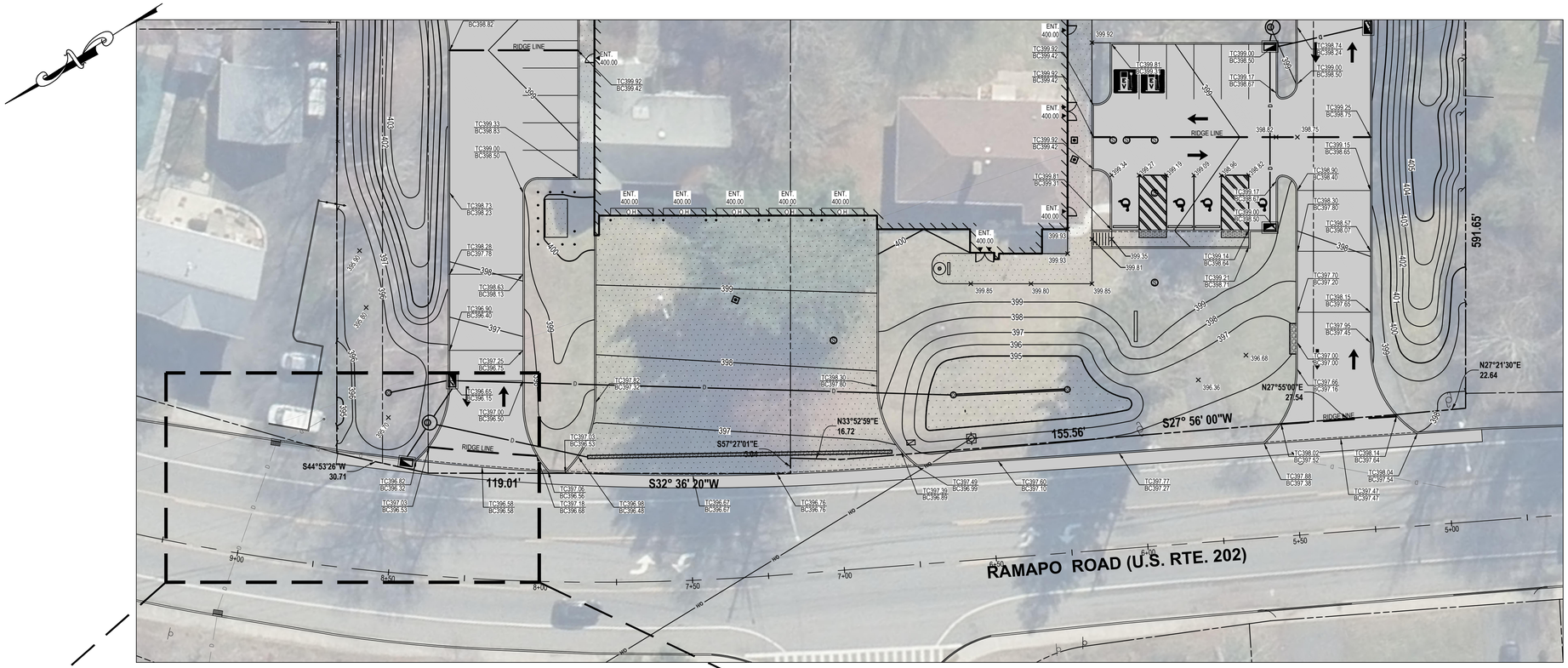

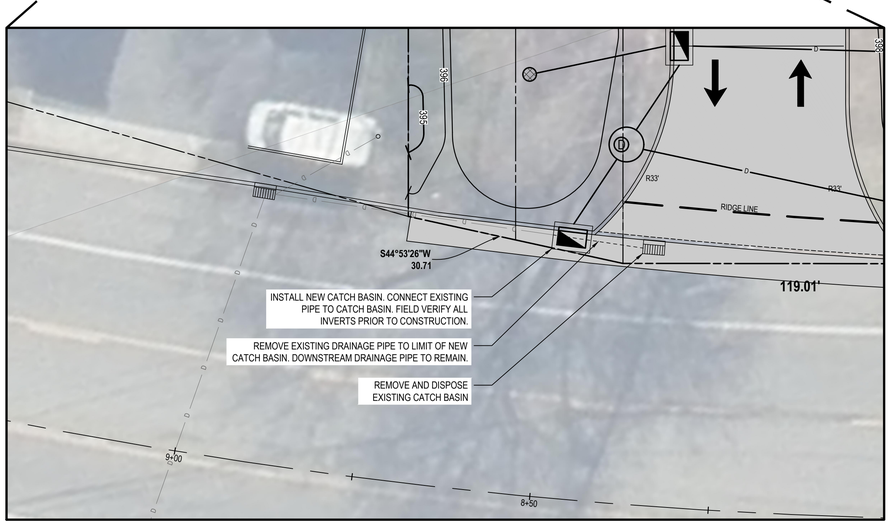

Drainage Improvement Inset
SCALE: 1" = 10'-0"

GRAPHIC SCALE
30 0 15 30
(IN FEET)
1 inch = 30 ft.

PLAN NOTES:

1. EXISTING SURVEY PREPARED BY ATZL, NASHER & ZIGLER P.C. DATED 12/19/2023.
2. VERIFY LOCATION AND INVERTS FOR ALL STRUCTURES PRIOR TO COMMENCEMENT OF CONSTRUCTION.
3. ALL NEW PAVEMENT SHALL MEET EXISTING GRADE AT EDGE OF EXISTING PAVEMENT.
4. ALL NEW CURBS SHALL MEET EXISTING GRADE OF ADJACENT CURB.
5. ALL WORK IN THE NYSDOT RIOGHT-OF-WAY SHALL BE DONE IN ACCORDANCE WITH ALL NYSDOT REQUIREMENTS AND IN ACCORDANCE WITH THE PERMIT DOCUMENTS.

811 1-800-962-7962
Dig Safely. New York
Call811
before you dig
www.digsafelynewyork.com

PENDING NYSDOT APPROVAL

H 2 M architects + engineers

538 Broad Hollow Road, 4th Floor East
Melville, NY 11747
631.756.8000 • www.h2m.com
NY Architecture & Landscape Architecture: No Certificate Required
NY Engineering Certificate of Authorization No. 0018178

MARK	DATE	DESCRIPTION

STATE OF NEW YORK · DANIELLE A. DRAKE · 092596 · LICENSED PROFESSIONAL ENGINEER

DANIELLE A. DRAKE, P.E.
NY PROFESSIONAL ENGINEER Lic. No. 092596
08/31/2027
EXP. DATE

"IN ACCORDANCE WITH ARTICLE 145, SECTION 7209 OF THE NYS EDUCATION LAW, ALTERATION OF THIS DOCUMENT EXCEPT BY LICENSE PROFESSIONAL IS ILLEGAL"

DESIGNED BY:	DRAWN BY:	CHECKED BY:	REVIEWED BY:
WHS	WHS	DAD	MRM

PROJECT No.:	DATE:	SCALE:
TRFD 2302	FEBRUARY 2025	AS SHOWN

CLIENT

THIELLS ROSEVILLE FIRE DISTRICT

NEW 26-100 FIRE HEADQUARTERS

THIELLS 26 FD

65 W RAMAPO RD GARNERVILLE, NY 10923

CONTRACT

CONTRACT C CIVIL CONSTRUCTION

STATUS

FINAL BID DOCUMENT

SHEET TITLE

NYSDOT GRADING & DRAINAGE IMPROVEMENT PLAN

DRAWING No.

DOT 101.00

C:\Users\wsp\Desktop\Local\Temp\AcPublish_9788\NYSDOT 101.00 - NYSDOT GRADING & DRAINAGE IMPROVEMENT PLAN.dwg Last Modified: Feb 17, 2025 - 11:38am Plotted on: Feb 17, 2025 - 3:24am By: wsp2c

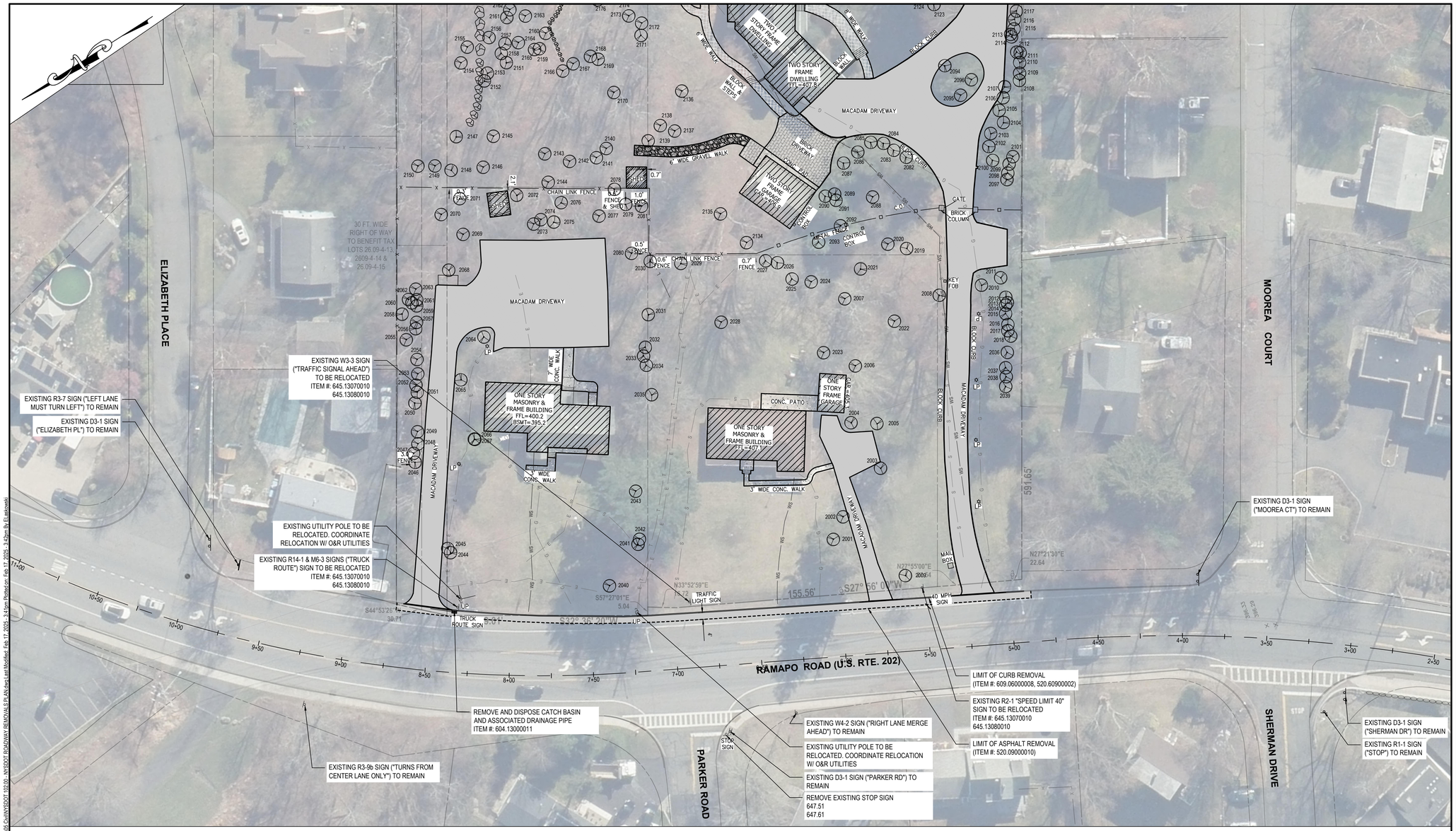

GRAPHIC SCALE

30 0 15 30

(IN FEET)
1 inch = 30 ft.

SITE DATA

RCTM: 26.09-4-11,12,13,14,15
ZONE: R15 - MEDIUM DENSITY RESIDENCE DISTRICT / ROUTE 202 FLOATING OVERLAY DISTRICT
PROPOSED USE: FIRE STATION
SITE AREA: 213,918 SF / 4.91 ACRES

PLAN NOTES:

1. EXISTING SURVEY PREPARED BY ATZL, NASHER & ZIGLER P.C. DATED 12/19/2023.
2. AERIAL IMAGERY PROVIDED BY NYSGIS DATA, LAST UPDATED IN 2021. IMAGERY SHOWN FOR INFORMATIONAL PURPOSES ONLY.

811 1-800-962-7962
Dig Safely. New York
Call811
before you dig
www.digsafelynewyork.com

PENDING NYSDOT APPROVAL

H2M architects + engineers
538 Broad Hollow Road, 4th Floor East
Melville, NY 11747
631.756.8000 • www.h2m.com
NY Architecture & Landscape Architecture: No Certificate Required
NY Engineering Certificate of Authorization No. 0018178

MARK	DATE	DESCRIPTION

STATE OF NEW YORK · DANIELLE A. DRAKE · 092596 · LICENSED PROFESSIONAL ENGINEER

DANIELLE A. DRAKE, P.E. — 08/31/2027 DATE
NY PROFESSIONAL ENGINEER Lic. No. 092596
"IN ACCORDANCE WITH ARTICLE 145, SECTION 7209 OF THE NYS EDUCATION LAW, ALTERATION OF THIS DOCUMENT EXCEPT BY LICENSE PROFESSIONAL IS ILLEGAL"

DESIGNED BY:	DRAWN BY:	CHECKED BY:	REVIEWED BY:
WHS	WHS	DAD	MRM
PROJECT No.: TRFD 2302	DATE: FEBRUARY 2025	SCALE: AS SHOWN	

CLIENT

THIELLS ROSEVILLE FIRE DISTRICT

NEW 26-100 FIRE HEADQUARTERS

THIELLS 26 FD

65 W RAMAPO RD
GARNERVILLE, NY 10923

CONTRACT
CONTRACT C
CIVIL CONSTRUCTION

STATUS
FINAL BID DOCUMENT

SHEET TITLE
NYSDOT ROADWAY REMOVALS PLAN

DRAWING No.
DOT 102.00

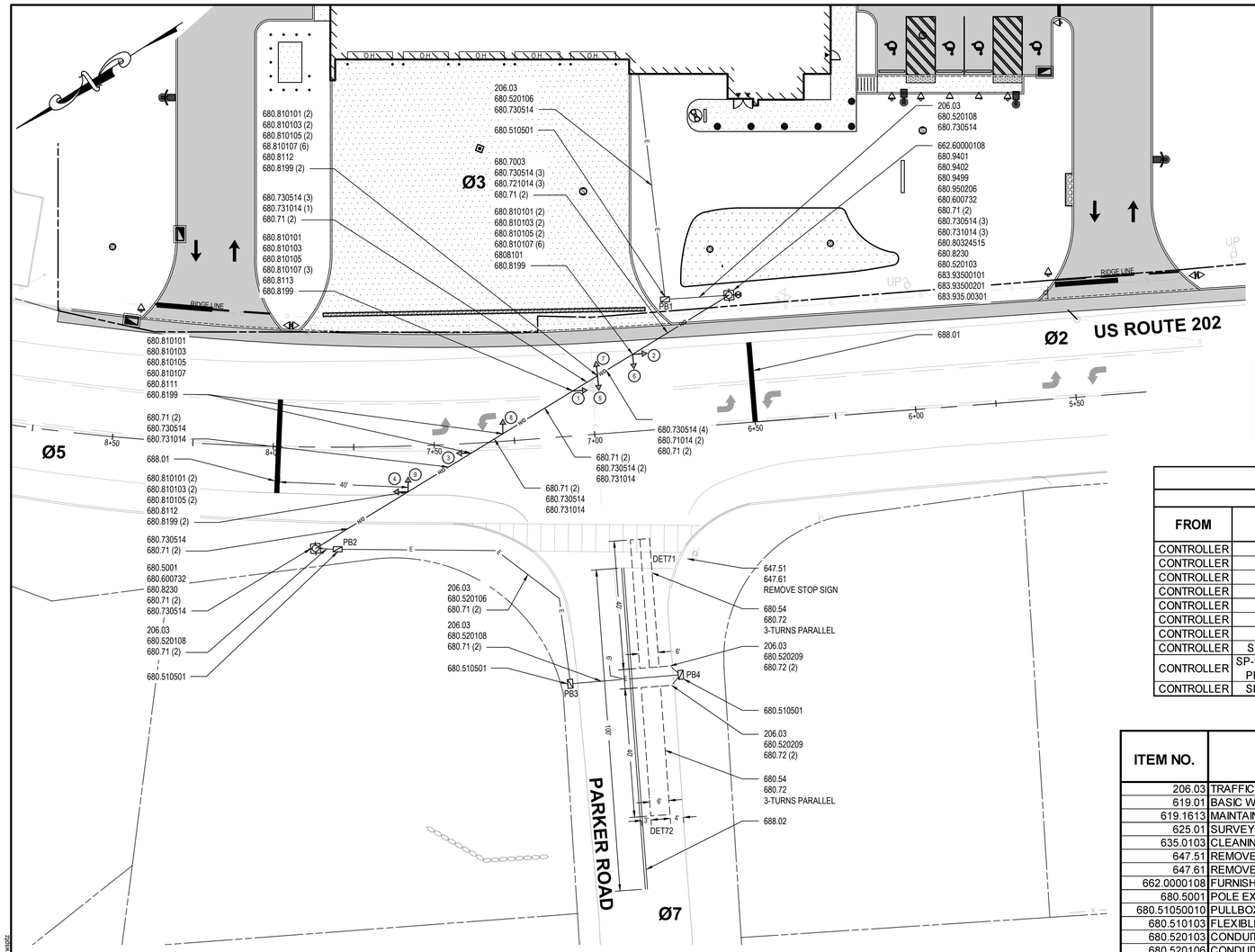

LEGEND

DESCRIPTION	SYMBOL
TRAFFIC SIGNAL HEAD	1
TRAFFIC SIGNAL POLE	
TRAFFIC SIGNAL CABINET	
SIGNAL PULLBOX	
UNDERGROUND SIGNAL CONDUIT	E
OVERHEAD SIGNAL SPAN WIRE	OH
SIGNAL DETECTOR LOOP	
DOUBLE YELLOW PAVEMENT MARKING	

TABLE OF TRAFFIC SIGNAL POLES

STATION	OFFSET	POLE	ITEM NUMBER	FOOTING	STANDARD
6+55.11	39.72' R	SP1	680.600732	221 FT-KIPS	L14
7+86.61	31.48' L	SP2	680.600732	221 FT-KIPS	L14

TABLE OF DETECTORS

NUMBER	TYPE	FUNCTION	SIZE	TURNS	206.05 INSTALL CONDUIT	680.520203 FLEXIBLE CONDUIT	680.54 LOOP INSTALL	680.72 LOOP WIRE
71	QUAD	PRESENCE	6' X 40'	3	7	7	140	720
72	STD	PRESENCE	6' X 40'	3	7	7	100	300

TABLE OF CABLES

ROUTE FROM	ROUTE THROUGH	ROUTE TO	CABLE DESCRIPTION	# OF CABLES	680.71 SHIELDED LEAD-IN	680.730514 5 C, 14 AWG	680.731014 10 C, 14 AWG
CONTROLLER	SP-1	PREEMPT TT	14 C, 14AWG	1		25	
CONTROLLER	SP-1, SPAN	HEAD A	14/10C-A-X/X	1			80
CONTROLLER	SP-1, SPAN	HEAD B	14/10C-B-X/X	1			90
CONTROLLER	SP-1, SPAN	HEAD C	14/5C-C-X/X	1		104	
CONTROLLER	SP-1, SPAN	HEAD D	14/5C-D-X/X	1		136	
CONTROLLER	SP-1, SPAN	HEAD E	14/5C-E-X/X	1		143	
CONTROLLER	SP-1, SPAN	HEAD F	14/10C-F-X/X	1			165
CONTROLLER	SP-1, SPAN,SP-2	PREEMPT TT	14 C, 14AWG	1		180	
CONTROLLER	SP-1, SPAN,SP-2, C3, PB2, C4, PB3, C5,	LOOPS 71 & 72	SHIELDED LEAD-IN	2	640		
CONTROLLER	SP-1, C1, PB1, C6	FD SWITCH	14 C, 14AWG	1		95	

ESTIMATE OF QUANTITIES

ITEM NO.	DESCRIPTION	UNIT	QUANTITY
206.03	TRAFFIC SIGNAL CONDUIT EXCAVATION AND BACKFILL	LF	230
619.01	BASIC WORK ZONE TRAFFIC CONTROL	LS	NEC
619.1613	MAINTAIN TRAFFIC SIGNAL EQUIPMENT, REQUIREMENT "C"	INTM	6
625.01	SURVEY OPERATIONS	LS	NEC
635.0103	CLEANING & PREPARATION OF PAVEMENT SURFACES - LINES	LF	608
647.51	REMOVE & DISPOSE SIGN PANEL/SIGN PANEL ASSEMBLY SIZE I (UNDER 30 SQUARE FEET)	EACH	1
647.61	REMOVE & DISPOSE SIGNS GROUND MOUNTED TYPE A SIGN SUPPORTS & FOUNDATIONS SIZE I	EACH	1
662.0000108	FURNISH ELECTRICAL SERVICE	LS	NEC
680.5001	POLE EXCAVATION AND CONCRETE FOUNDATION	CY	9.2
680.51050010	PULLBOX, RECTANGULAR REINFORCED CONCRETE (26" X 18")	EACH	4
680.510103	FLEXIBLE LIQUID TIGHT STEEL, 1"	LF	12
680.520103	CONDUIT, METAL STEEL, ZINC COATED, 1"	LF	26
680.520106	CONDUIT, METAL STEEL, ZINC COATED, 2"	LF	173
680.520108	CONDUIT, METAL STEEL, ZINC COATED, 3"	LF	45
680.54	INDUCTANCE LOOP INSTALLATION	LF	240
680.600732	TRAFFIC SIGNAL POLE - SPAN WIRE 7000 POUND LOAD, 32 FEET LONG	EACH	2
680.7003	DUAL SPAN WIRE ASSEMBLY WITH LOWER TETHER	EACH	2
680.71	SHIELED LEAD-IN CABLE	LF	640
680.72	INDUCTANCE LOOP WIRE	LF	1020
680.730514	SIGNAL CABLE 5 CONDUCTORS, 14 AWG	LF	683
680.731014	SIGNAL CABLE 10 CONDUCTORS, 14 AWG	LF	335
680.79010008	REMOVE TRAFFIC SIGNAL EQUIPMENT	LS	NEC
680.80324515	INSTALL MICROCOMPUTER CABINET	EACH	1
680.810101	TRAFFIC SIGNAL MODULE - 12 INCH, RED BALL, LED	EACH	9
680.810103	TRAFFIC SIGNAL MODULE - 12 INCH, YELLOW BALL, LED	EACH	9
680.810105	TRAFFIC SIGNAL MODULE - 12 INCH, GREEN BALL, LED	EACH	9
680.810107	TRAFFIC SIGNAL SECTION - TYPE I, 12 INCH	EACH	27
680.8111	TRAFFIC SIGNAL BRACKET ASEMBLY - 1 WAY	EACH	3
680.8112	TRAFFIC SIGNAL BRACKET ASEMBLY - 2 WAY	EACH	3
680.81990008	TRAFFIC SIGNAL BACK PLATES WITH YELLOW REFLECTIVE TAPE	EACH	9
680.8230	FIRE PRE-EMPTION TELL TALE LIGHT	EACH	2
680.9401	WATERTIGHT DISCONNECT BOX	EACH	1
680.9402	METER PAN	EACH	1
680.9499	INSTALL ELECTRICAL DISCONNECT TRANSFER SWITCH	EACH	1
680.950206	SERVICE CABLE 2 CONDUCTOR NO. 06 AWG	LF	70
680.99020010	REMOVE STEEL ANCHOR BASE TRAFFIC SIGNAL POLE	EACH	2
680.99050010	REMOVE POLE MOUNTED SIGNAL CONTROL CABINET	EACH	1
680.99100010	REMOVE TRAFFIC SIGNAL SPAN WIRE ASSEMBLY WITH TRAFFIC SIGNAL HEADS	EACH	1
683.93500101	SPREAD SPECTRUM WIRELESS TRAFFIC CONTROL	EACH	2
683.93500201	DIRECTIONAL YAGI ANTENNA FOR SPREADSPECTRUM WIRELESS TRAFFIC CONTROL	EACH	2
683.93500301	REMOTE ANTENNA CABLE FOR SPREAD SPECTRUM WIRELESS TRAFFIC CONTROL	LF	75
688.01	WHITE PREFORMED REFLECTORIZED PAVEMENT STRIPES	LF	408
688.02	YELLOW PREFORMED REFLECTORIZED PAVEMENT STRIPES	LF	200

SIGNAL No. R140

TABLE OF OPERATIONS

PHASE	FACES 1	2	3	4	5	6	7	8	9
Ø2 + Ø5	G	G	G	G	R	R	FLR	FLR	FLR
1st CL to Ø7	Y	Y	Y	Y	R	R	R	R	R
2nd CL to Ø7	R	R	R	R	R	R	R	R	R
1st CL to Preempt	Y	Y	Y	Y	R	R	R	R	R
2nd CL to Preempt	R	R	R	R	R	R	R	R	R
Ø7	R	R	R	R	G	G	R	R	R
1st CL to Ø2 + Ø5	R	R	R	R	Y	Y	R	R	R
2nd CL to Ø2 + Ø5	R	R	R	R	R	R	R	R	R
1st CL to Preempt	R	R	R	R	Y	Y	R	R	R
2nd CL to Preempt	R	R	R	R	R	R	R	R	R
Preempt Ø3	R	R	R	R	R	R	G	G	G
1st CL to Ø2 + Ø5	R	R	R	R	R	R	Y	Y	Y
2nd CL to Ø2 + Ø5	R	R	R	R	R	R	R	R	R
Flashing	Y	Y	Y	Y	R	R	R	R	R

SEQUENCE TABLE

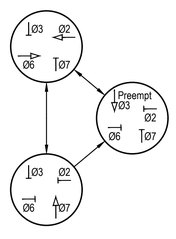

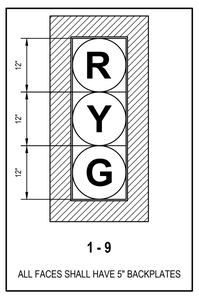

1 - 9

ALL FACES SHALL HAVE 5" BACKPLATES

GRAPHIC SCALE

20 0 10 20

(IN FEET)
1 inch = 20 ft.

NOTES:

1. SIGNAL NO. R140 SHALL BE COORDINATED THE EXISTING SIGNAL AT THE INTERSECTION OF ROUTE 202 AND ROSMAN ROAD VIA THE SPREAD SPECTRUM RADIO TO BE INSTALLED IN EACH SIGNAL. UPON THE INITIATION OF THE CLEARANCE INTERVAL OF PHASE 2 OF THE SIGNAL AT ROSMAN ROAD, A SIGNAL SHALL BE SENT TO NEW SIGNAL NO. R140.

811 1-800-962-7962
Dig Safely. New York
Call811
before you dig
www.digsafelynewyork.com

PENDING NYSDOT APPROVAL

H2M architects + engineers

538 Broad Hollow Road, 4th Floor East
Melville, NY 11747
631.756.8000 • www.h2m.com
NY Architecture & Landscape Architecture: No Certificate Required
NY Engineering Certificate of Authorization No. 0018178

MARK	DATE	DESCRIPTION

STATE OF NEW YORK · DANIELLE A. DRAKE · 092596 · LICENSED PROFESSIONAL ENGINEER

DANIELLE A. DRAKE, P.E.
NY PROFESSIONAL ENGINEER Lic. No. 092596

08/31/2027 EXP. DATE

"IN ACCORDANCE WITH ARTICLE 145, SECTION 7209 OF THE NYS EDUCATION LAW, ALTERATION OF THIS DOCUMENT EXCEPT BY LICENSE PROFESSIONAL IS ILLEGAL"

DESIGNED BY:	DRAWN BY:	CHECKED BY:	REVIEWED BY:
WHS	WHS	DAD	MRM

PROJECT No.:	DATE:	SCALE:
TRFD 2302	FEBRUARY 2025	AS SHOWN

CLIENT

THIELLS ROSEVILLE FIRE DISTRICT

NEW 26-100 FIRE HEADQUARTERS

THIELLS 26 FD

65 W RAMAPO RD
GARNERVILLE, NY 10923

CONTRACT

CONTRACT C
CIVIL CONSTRUCTION

STATUS

FINAL BID DOCUMENT

SHEET TITLE

TRAFFIC SIGNAL PLAN

DRAWING No.

DOT 200.00

C:\Users\wsolo\appdata\local\temp\AcPublish_97868\TRAFFIC SIGNAL PLAN.dwg Last Modified: Feb 17, 2025 - 11:44am Plotted on: Feb 17, 2025 - 3:27pm By: wsolo

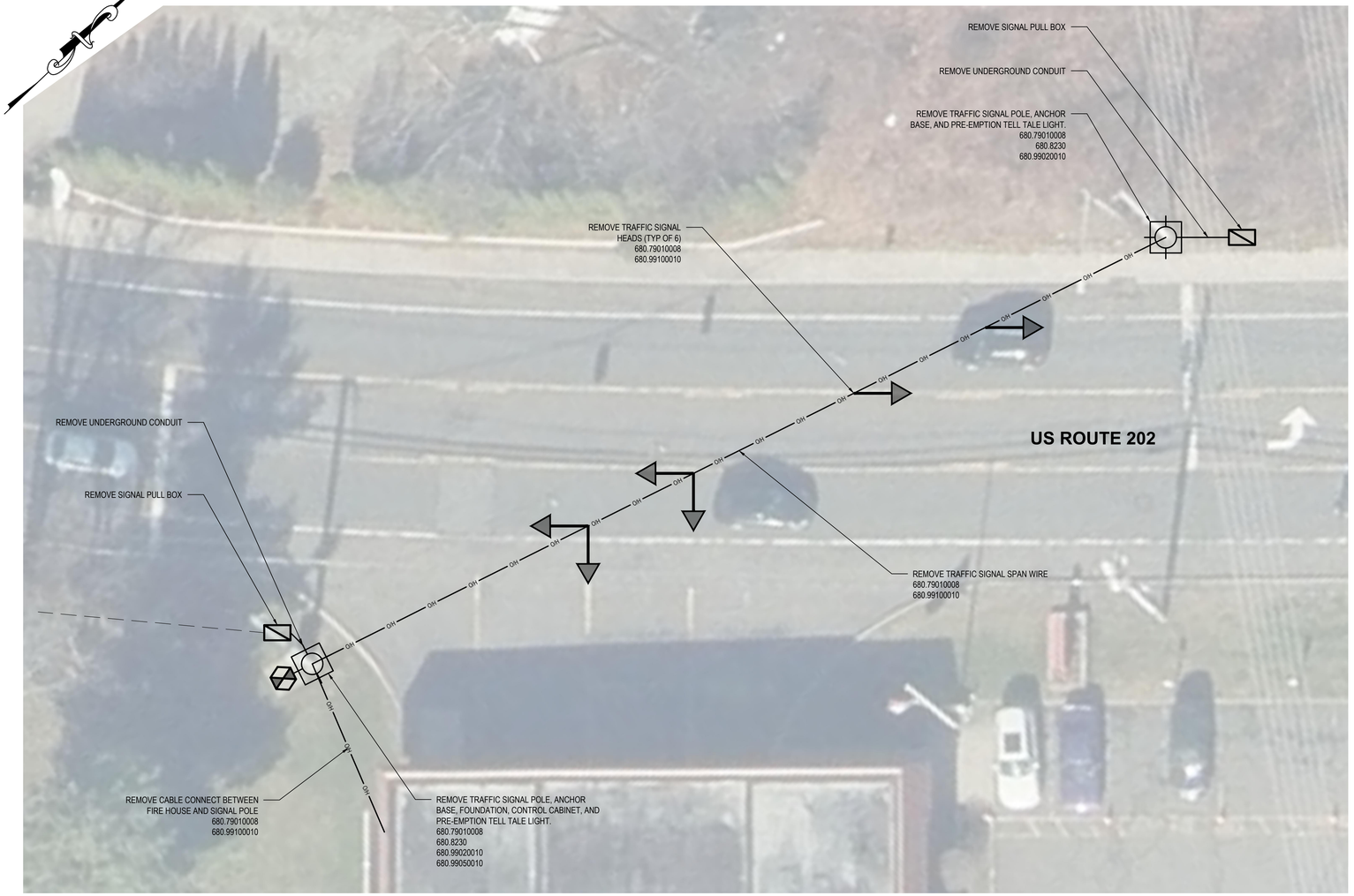

Flashing Beacon Removal Plan
SCALE: 1" = 80'

GRAPHIC SCALE
10 0 5 10
(IN FEET)
1 inch = 10 ft.

LEGEND

DESCRIPTION	SYMBOL
REMOVE TRAFFIC SIGNAL HEAD	
REMOVE TRAFFIC SIGNAL POLE	
REMOVE TRAFFIC SIGNAL CABINET	
REMOVE SIGNAL PULLBOX	
REMOVE UNDERGROUND CONDUIT	E
REMOVE OVERHEAD SPAN WIRE	OH OH

TABLE OF REMOVALS

MATERIAL/EQUIPMENT	QUANTITY	DISPOSAL
Traffic Signal Pole Span Wire - 10 M., 30 kN	2	Salvage
Two Way Traffic Signal Head (6-12")	2	Salvage
One Way Traffic Signal Head (3-12")	2	Salvage
Type 330 Cabinet	1	Salvage
Signal Pole Foundation - 286.5 kN-M	2	Dispose
Dual Span Wire w/ Upper Tether	1	Dispose
Aerial Cable Connection Between Signal & Fire Station	1	Dispose
Fire Preemption Tell Tale Light	2	Salvage
Miscellaneous Signal Cale	NEC	Dispose
Traffic Signal Pole Bracket Mount - 6 M.	1	Salvage
Signal Pole Foundation (K-1)	1	Dispose
Flashing Beacon Assembly and Sign	1	Salvage
Pullbox, Conc., 24" X 18"	2	Dispose

NOTES:
1. ALL REMOVALS SHALL BE INCLUDED IN THE PRICE BID FOR ITEM 680.79010008
2. ITEMS TO BE DISPOSED OF SHALL BECOME THE PROPERTY OF THE CONTRACTOR AND BE REMOVED FROM THE SITE.
3. ITEMS DESIGNATED FOR SALVAGE SHALL BE RETURNED TO THE STATE.
4. THE TOP 18 INCHES OF FOUNDATIONS SHALL BE REMOVED INCLUDING ALL CONCRETE, REINFORCING STEEL AND ANCHOR BOLTS PRESENT. SUITABLE FILL SHALL BE USED TO BACKFILL THE EXCAVATED MATERIAL IN 6 INCH LIFTS WITH THE TOP 4 INCHES FILLED WITH TOP SOIL AND SEEDED TO RESTORE THE SURFACE AREA.
5. PULLBOXES SHALL EITHER BE REMOVED IN THEIR ENTIRETY OR THE TOP 18 INCHES SHALL BE REMOVED, ANY VOID FILLED WITH SUITABLE MATERIAL AND THE TOP 18 INCHES FILLED WITH SUITABLE MATERIAL IN 6 INCH LIFTS, AND TOPPPED WITH 4 INCHES OF TOP SOIL AND SEEDED TO RESTORE THE SURFACE AREA.

811 1-800-962-7962
Dig Safely. New York
Call811
before you dig
www.digsafelynewyork.com

PENDING NYSDOT APPROVAL

H2M architects + engineers
538 Broad Hollow Road, 4th Floor East
Melville, NY 11747
631.756.8000 • www.h2m.com
NY Architecture & Landscape Architecture: No Certificate Required
NY Engineering Certificate of Authorization No. 0018178

MARK	DATE	DESCRIPTION

STATE OF NEW YORK · DANIELLE A. DRAKE · 092596 · LICENSED PROFESSIONAL ENGINEER

DANIELLE A. DRAKE, P.E.
NY PROFESSIONAL ENGINEER Lic. No. 092596
08/31/2027 EXP. DATE
"IN ACCORDANCE WITH ARTICLE 145, SECTION 7209 OF THE NYS EDUCATION LAW, ALTERATION OF THIS DOCUMENT EXCEPT BY LICENSE PROFESSIONAL IS ILLEGAL"

DESIGNED BY:	DRAWN BY:	CHECKED BY:	REVIEWED BY:
WHS	WHS	DAD	MRM

PROJECT No.:	DATE:	SCALE:
TRFD 2302	FEBRUARY 2025	AS SHOWN

CLIENT
THIELLS ROSEVILLE FIRE DISTRICT

NEW 26-100 FIRE HEADQUARTERS

THIELLS 26 FD

65 W RAMAPO RD
GARNERVILLE, NY 10923

CONTRACT
CONTRACT C
CIVIL CONSTRUCTION

STATUS
FINAL BID DOCUMENT

SHEET TITLE
TRAFFIC SIGNAL REMOVAL PLAN

DRAWING No.
DOT 201.00

C:\Users\wsmith\appdata\local\temp\AcPublish_8788\TRAFFIC SIGNAL PLAN.dwg Last Modified: Feb 17, 2025 - 11:44am Plotted on: Feb 17, 2025 - 3:27pm By: wsmith

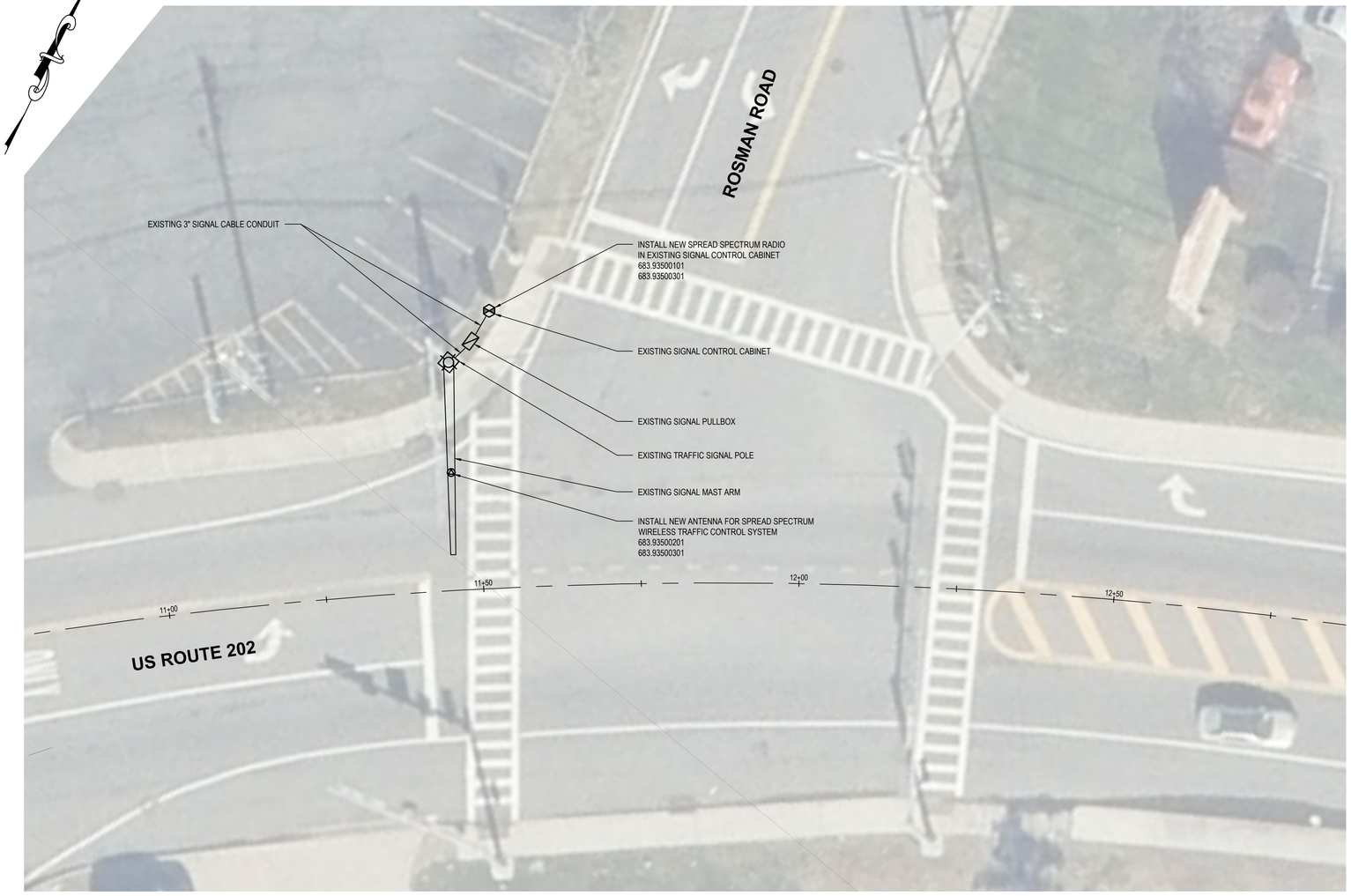

GRAPHIC SCALE

10 0 5 10

(IN FEET)
1 inch = 10 ft.

LEGEND

DESCRIPTION	SYMBOL
POLE MOUNTED ANTENNA	
TRAFFIC SIGNAL POLE	
TRAFFIC SIGNAL CABINET	
PULLBOX	
REMOVE UNDERGROUND CONDUIT	E
REMOVE OVERHEAD SPAN WIRE	O/H O/H

H2M architects + engineers

538 Broad Hollow Road, 4th Floor East
Melville, NY 11747
631.756.8000 • www.h2m.com
NY Architecture & Landscape Architecture: No Certificate Required
NY Engineering Certificate of Authorization No. 0018178

MARK	DATE	DESCRIPTION

STATE OF NEW YORK
DANIELLE A. DRAKE
092596
LICENSED PROFESSIONAL ENGINEER

Danielle Drake 08/31/2027
DANIELLE A. DRAKE, P.E. EXP. DATE
NY PROFESSIONAL ENGINEER Lic. No. 092596

"IN ACCORDANCE WITH ARTICLE 145, SECTION 7209 OF THE NYS EDUCATION LAW, ALTERATION OF THIS DOCUMENT EXCEPT BY LICENSE PROFESSIONAL IS ILLEGAL."

DESIGNED BY:	DRAWN BY:	CHECKED BY:	REVIEWED BY:
WHS	WHS	DAD	MRM

PROJECT No.:	DATE:	SCALE:
TRFD 2302	FEBRUARY 2025	AS SHOWN

CLIENT

THIELLS ROSEVILLE FIRE DISTRICT

NEW 26-100 FIRE HEADQUARTERS

THIELLS 26 FD

65 W RAMAPO RD
GARNERVILLE, NY 10923

CONTRACT

CONTRACT C
CIVIL CONSTRUCTION

STATUS

FINAL BID DOCUMENT

SHEET TITLE

SPREAD SPECTRUM WIRELESS CONTROL INSTALLATION PLAN

DRAWING No.

DOT 202.00

811 1-800-962-7962
Dig Safely. New York
Call811
before you dig
www.digsafelynewyork.com

PENDING NYSDOT APPROVAL

C:\Users\wspdata\appdata\local\temp\AcPublish_9788\TRAFFIC SIGNAL PLAN.dwg Last Modified: Feb 17, 2025 - 11:44am Plotted on: Feb 17, 2025 - 3:27pm By: wspbz

DESIGN NOTES:

1. BUILDING CODE:
   2020 BUILDING CODE OF NEW YORK STATE

2. RISK CATEGORY:
   IV

3. BUILDING GRAVITY LOADS:
   A. DEAD LOADS:

ROOF	25 PSF
2ND FLOOR	68 PSF
MEZZANINE	68 PSF
CU-1A, 1B, 1C	782 LB
DOAS-1	2110 LB
RTU- B	2590 LB
RTU- A	1452 LB
MAU-1	1328 LB

   B. LIVE LOADS:

ROOF	20 PSF
OFFICES	50 PSF
CORRIDORS/LOBBIES/STAIRS	100 PSF
STORAGE (AT MEZZANINE)	125 PSF

   C. SNOW LOADS:

GROUND SNOW LOAD, pg	30 PSF
EXPOSURE COEFFICIENT, Ce	1.0
THERMAL COEFFICIENT, Ct	1.0
SNOW IMPORTANCE FACTOR	1.2
MINIMUM SNOW LOAD, pm	24 PSF
FLAT ROOF SNOW LOAD, pf	26 PSF

SNOW DRIFT HAS BEEN ACCOUNTED FOR IN DESIGN OF ALL NEW STRUCTURAL MEMBERS AND ANALYSIS OF EXISTING STRUCTURAL MEMBERS.

SEE ROOF FRAMING PLAN AND APPLICABLE FRAMING SCHEDULES FOR SNOW DRIFT LOAD LOCATIONS AND MAGNITUDES TO BE INCLUDED IN DELEGATED DESIGN.

4. WIND LOADS:

BASIC WIND SPEED	128 MPH
EXPOSURE	B
INTERNAL PRESSURE COEFF., GCpi	+/- 0.18
END ZONE WIDTH, a	10 FT

DESIGN WIND ZONE:	DESIGN WIND PRESSURE:
MWFRS WALL (END ZONE)	26.0 PSF
MWFRS WALL (INTERIOR ZONE)	17.3 PSF
MWFRS ROOF (END ZONE)	-16.0 PSF
MWFRS ROOF (INTERIOR ZONE)	-16.0 PSF
UPLIFT (MAXIMUM)	-31.3 PSF
C&C WALL (END ZONE)	29.5, -39.5 PSF
C&C WALL (INT. ZONE)	29.5, -32.1 PSF
C&C FLAT ROOF (CORNER ZONE)	16.0, -84.6 PSF
C&C FLAT ROOF (END ZONE)	16.0, -62.0 PSF
C&C FLAT ROOF (INT. ZONE)	16.0, -47.0 PSF

COMPONENT AND CLADDING VALUES LISTED ARE BASED ON 10 SQUARE FOOT "EFFECTIVE AREA" AS DEFINED BY ASCE 7-16 - MINIMUM DESIGN LOADS FOR BUILDING AND OTHER STRUCTURES. ALL ITEMS SPECIFIED TO BE DESIGNED BY OTHERS SHALL BE DESIGNED TO WITHSTAND COMPONENT AND CLADDING LOADS SHOWN, UNLESS SPECIFICALLY NOTED OTHERWISE IN PLANS, SPECIFICATIONS OR BY RFI RESPONSE. WIND LOADS MAY BE REDUCED BASED ON INCREASED "EFFECTIVE AREA" WHEN CALCULATIONS ARE SUBMITTED AND REVIEWED BY ENGINEER OF RECORD PRIOR TO FINAL DESIGN SUBMISSION. SUBMITTAL SHALL INCLUDE EFFECTIVE AREA ASSUMPTIONS FOR EACH COMPONENT AND WIND LOAD CALCULATIONS USING PARAMETERS SPECIFIED HEREIN.

5. SEISMIC LOADS:

SEISMIC SITE CLASS	D
SEISMIC IMPORTANCE FACTOR, Ie	1.5

Ss = 0.290 g	S1 = 0.061 g
Fa = 1.57	Fv = 2.40
Sms = 0.454 g	Sm1 = 0.147 g
Sds = 0.303 g	Sd1 = 0.098 g

SEISMIC DESIGN CATEGORY C

ANALYSIS PROCEDURE:
EQUIVALENT LATERAL FORCE PROCEDURE
SEISMIC FORCE RESISTING SYSTEM:
STEEL SYSTEMS NOT SPECIFICALLY DETAILED FOR SEISMIC RESISTANCE, EXCLUDING CANTILEVER COLUMN SYSTEMS
R = 3.0 Cd = 3.0 Ω_0 = 3.0

SEISMIC RESPONSE COEFFICIENT, Cs	0.093
BASE SHEAR, ULTIMATE	128.3 KIPS

6. SOIL DESIGN VALUES:

SOIL BEARING CAPACITY	3,000 PSF
SUBGRADE MODULUS	150 PSI/IN

SOIL DESIGN VALUES AS REPORTED IN GEOTECHNICAL ENGINEERING REPORT BY WHITESTONE ASSOCIATES ENGINEERING & GEOLOGY NY, PLLC DATED [09/23/2024].

7. ANY BUILDING COMPONENT NOTED AS DELEGATED DESIGN ITEMS IN DRAWINGS AND/OR SPECIFICATIONS SHALL BE DESIGNED IN ACCORDANCE WITH MINIMUM LOADS SPECIFIED ABOVE. ANY DEVIATION FROM NOTED LOAD VALUES SHALL BE SUBMITTED BY CONTRACTOR FOR REVIEW AND APPROVAL TO EOR PRIOR TO SUBMITTING SHOP DRAWINGS AND CALCULATIONS.

8. ALL DELEGATED DESIGN SHALL BE DONE TO THE ABOVE REFERENCED BUILDING CODE VERSIONS, AND THEIR REFERENCED SUBCODES.

9. ADDITIONAL DESIGN LOADS INDICATED ON STRUCTURAL DRAWINGS ARE IDENTIFIED AS FOLLOWS:
   DL = DEAD LOAD
   LL = LIVE LOAD
   Lr = ROOF LIVE LOAD
   SL = SNOW LOAD
   WL= WIND LOAD
   EQ= SEISMIC LOAD
   FL = FLOOD LOAD

GENERAL NOTES:

1. SPECIFICATIONS ARE PART OF THE CONSTRUCTION DOCUMENTS AND MUST BE USED IN CONJUNCTION WITH THE DRAWINGS. WHERE SPECIFICATIONS ARE IN CONFLICT WITH THE GENERAL NOTES OR DRAWINGS, THE MORE RESTRICTIVE LIMITATION SHALL APPLY.
2. THE CONTRACTOR SHALL VERIFY ALL DIMENSIONS BY MEASUREMENTS OR SURVEY AT THE JOB SITE AND SHALL TAKE ANY AND ALL OTHER MEASUREMENTS NECESSARY TO VERIFY THE DRAWINGS AND TO PERFORM THE WORK PROPERLY.
3. ANY DISCREPANCY BETWEEN THE DRAWINGS AND THE MEASURED DIMENSIONS OF THE EXISTING CONDITION SHALL BE BROUGHT TO THE ATTENTION OF THE ENGINEER. NO WORK SHALL PROCEED UNTIL SUCH DISCREPANCIES HAVE BEEN RECTIFIED, INCLUDING BUT NOT LIMITED TO FABRICATION OF MATERIALS. SUCH DISCREPANCIES BETWEEN THE DRAWINGS AND THE MEASURED DIMENSIONS SHALL NOT BE THE REASONS FOR ANY EXTRA COST OR DELAY IN THE EXECUTION OF THE WORK AND THE WORK SHALL BE PERFORMED AT NO EXTRA COST TO THE OWNER.
4. ALL CONTRACTORS ARE REQUIRED TO VISIT THE SITE AND FULLY INFORM THEMSELVES AS TO THE EXISTING CONDITIONS AND LIMITATIONS PRIOR TO SUBMITTING THEIR PROPOSAL/BID. FAILURE TO VISIT THE SITE AND NOT FAMILIARIZING THEMSELVES WITH THE CONDITIONS AND LIMITATIONS WILL IN NO WAY RELIEVE THE SUCCESSFUL BIDDER FROM FURNISHING ANY MATERIALS OR PERFORMING ANY WORK THAT MAY BE REQUIRED TO COMPLETE THE WORK IN ACCORDANCE WITH THE DRAWINGS AND SPECIFICATIONS AT NO ADDITIONAL COST TO THE OWNER.
5. THE CONTRACT STRUCTURAL DOCUMENTS REPRESENT THE FINISHED STRUCTURE. THE CONTRACTOR ALONE IS RESPONSIBLE FOR THE MEANS AND METHODS OF CONSTRUCTION AND SAFETY OF THE STRUCTURE AND WORKMEN DURING THE ENTIRE CONSTRUCTION PERIOD, WHICH SHALL INCLUDE BUT NOT BE LIMITED TO: DESIGN AND INSTALLATION OF BRACING, SHORING FOR CONSTRUCTION EQUIPMENT, SHORING FOR NEW OR EXISTING BUILDINGS, FORMS, AND SCAFFOLDING, SHORING OF RETAINING WALLS, AND OTHER TEMPORARY SUPPORTS AS REQUIRED.
6. CONTRACTOR SHALL SCHEDULE WORK IN CONSULTATION WITH THE OWNER AND IN SUCH A WAY AS TO MINIMIZE CONFLICT WITH THE OPERATION OF ANY EXISTING BUILDINGS, FACILITIES, OR RIGHTS-OF-WAY.
7. CONTRACTOR SHALL COMPLY WITH ALL APPLICABLE REQUIREMENTS OF OSHA AND ANY OTHER GOVERNING BODIES HAVING JURISDICTION AT THE SITE.
8. IN CASE OF ANY DAMAGE TO THE CONSTRUCTION, THE CONTRACTOR SHALL REPAIR THE SAME TO THE ENTIRE SATISFACTION OF THE OWNER AT NO ADDITIONAL COST TO THE OWNER.
9. CONTRACTOR SHALL INFORM THE ENGINEER OF ANY DEMOLITION, ALTERATIONS REQUIRED, OR INTERFERENCES NOT SHOWN ON THE DEMOLITION DRAWINGS FOR RESOLUTION. THE CONTRACTOR SHALL ALLOW MINIMUM SEVEN (7) WORKING DAYS FOR RESOLUTION OF THE CONDITION UNLESS ADDITIONAL TIME IS STATED TO BE REQUIRED BY THE ENGINEER.
10. TYPICAL DETAILS ON THE DRAWINGS APPLY TO SITUATIONS OCCURRING ON THE PROJECT THAT ARE THE SAME OR SIMILAR TO THOSE SPECIFICALLY DETAILED. SUCH DETAILS APPLY WHETHER OR NOT DETAILS ARE REFERENCED AT EACH LOCATION. NOTIFY ENGINEER OF CONFLICTS REGARDING APPLICABILITY OF TYPICAL DETAILS.
11. DO NOT LOAD THE FINISHED SLAB-ON-GRADE OR ELEVATED SLABS WITH ERECTION EQUIPMENT. DO NOT STACK OR STORE CONSTRUCTION MATERIALS ON DECKS/SLABS. DO NOT CAUSE IMPACT LOADS TO DECK/SLAB DURING CONSTRUCTION.
12. CONTRACTOR SHALL VERIFY THE LOCATION OF ALL CHASES, INSERTS, OPENING, SLEEVES, FINISHES, DEPRESSIONS, PADS, AND WALL OPENINGS PRIOR TO CONSTRUCTION.
13. PRINCIPAL OPENINGS THROUGH THE FRAMING AND SLABS ARE SHOWN ON DRAWINGS. COORDINATE WITH THE ARCHITECTURAL AND MECHANICAL DRAWINGS FOR ALL REQUIRED OPENINGS AND PROVIDE FOR ALL REQUIRED OPENINGS WHETHER SHOWN ON THE STRUCTURAL DRAWING OR NOT. VERIFY SIZE AND LOCATION OF OPENINGS WITH THE MECHANICAL CONTRACTOR. DEVIATIONS FROM THE OPENINGS SHOWN ON THE STRUCTURAL DRAWINGS MUST BE APPROVED PRIOR TO CONSTRUCTION/FABRICATION OF THE REQUIRED OPENINGS.
14. LOADING FOR MECHANICAL EQUIPMENT ARE BASED ON THE UNITS SHOWN ON THE MECHANICAL DRAWINGS. ANY CHANGED IN TYPE, SIZE, OR NUMBER OF PIECES OF EQUIPMENT SHALL BE REPORTED TO THE ENGINEER OF RECORD FOR VERIFICATION OF THE ADEQUACY OF SUPPORTING MEMBERS PRIOR TO THE PLACEMENT OF SUCH EQUIPMENT.
15. SEE ARCHITECTURAL DRAWINGS FOR ELEVATIONS NOT SHOWN AND FOR EXACT LOCATION OF ALL SLAB DEPRESSIONS AND HOUSEKEEPING PADS. THE CONTRACTOR SHALL COMPARE THE STRUCTURAL SECTIONS WITH ARCHITECTURAL SECTIONS AND REPORT ANY DISCREPANCY TO THE ARCHITECT AND/OR ENGINEER PRIOR TO FABRICATING OR INSTALLING STRUCTURAL MEMBERS.

EXCAVATION NOTES:

1. EXCAVATION SHALL BE PERFORMED IN ACCORDANCE WITH THE REQUIREMENTS OF THE PROJECT GEOTECHNICAL REPORT. WHERE STRUCTURAL CONTRACT DOCUMENTS CONFLICT WITH THE GEOTECHNICAL REPORT, THE MORE RESTRICTIVE LIMITATION SHALL APPLY.
2. PROTECT ALL ABOVE AND BELOW GRADE UTILITIES WHICH ARE TO REMAIN.
3. PROTECT ALL PLANT LIFE, LAWNS, AND OTHER FEATURES REMAINING AS A PORTION OF THE FINAL LANDSCAPING.
4. PROTECT BENCHMARKS, EXISTING STRUCTURES, FENCES, SIDEWALKS, ROADWAYS, FINISHED PAVINGS, AND CURBS FROM EXCAVATION EQUIPMENT AND VEHICULAR TRAFFIC.
5. GRADE TOP PERIMETER OF EXCAVATION TO PREVENT SURFACE WATER FROM DRAINING INTO EXCAVATION.
6. HAND TRIM EXCAVATION. REMOVE LOOSE MATTER.
7. REMOVE LUMPED SUBSOIL, BOULDERS, AND ROCK.
8. UNSUITABLE BEARING MATERIAL, AS DEFINED IN THE PROJECT GEOTECHNICAL REPORT, IS TO BE REMOVED AND REPLACED WITH SUITABLE FILL PER THE RECOMMENDATIONS OF THE GEOTECHNICAL ENGINEER.
9. NOTIFY ENGINEER OF UNEXPECTED SUBSURFACE CONDITIONS AND DISCONTINUE WORK IN AFFECTED AREA UNTIL NOTIFIED TO RESUME WORK.
10. CORRECT UNAUTHORIZED EXCAVATION AT NO EXTRA COST TO OWNER IN ACCORDANCE WITH BACKFILLING NOTES.
11. STOCKPILE EXCAVATED MATERIAL IN AREA DESIGNATED ON SITE AND REMOVE EXCESS MATERIAL NOT BEING REUSED FROM SITE. DO NOT STOCKPILE EXCAVATED MATERIAL WITHIN 10 FEET, OR A DISTANCE EQUAL TO THE DEPTH OF EXCAVATION, OF THE EDGE OF EXCAVATION.
12. PROTECT EXCAVATIONS BY METHODS REQUIRED TO PREVENT CAVE-IN OR LOOSE SOIL FROM FALLING INTO EXCAVATION.
13. VERIFY LOCATION OF EXISTING STRUCTURES AND UTILITIES PRIOR TO EXCAVATION. CONTRACTOR SHALL ENSURE ALL SURROUNDING STRUCTURES ARE PROTECTED FROM ALL EFFECTS OF EXCAVATION, INCLUDING BUT NOT LIMITED TO: SETTLEMENT, SLIDING, CAVE-IN, AND VIBRATION.
14. SLOPE SIDES OF EXCAVATIONS AT A MAXIMUM SLOPE OF 1.5H:1V, UNLESS STEEPER SLOPE IS PERMITTED BY THE GEOTECHNICAL ENGINEER.
15. WHERE THE REQUIRED EXCAVATION SLOPE CANNOT BE PROVIDED, CONTRACTOR IS RESPONSIBLE FOR OBTAINING A SUPPORT OF EXCAVATION (SOE) DESIGN FOR VERTICAL EXCAVATION. SUPPORT OF EXCAVATION DESIGN SHALL INCLUDE EXCAVATION PLAN, SECTIONS, AND NOTES, AND BE SIGNED AND SEALED BY A REGISTERED PROFESSIONAL ENGINEER LICENSED IN THE STATE OF CONSTRUCTION.

BACKFILLING NOTES:

1. BACKFILLING SHALL BE PERFORMED IN ACCORDANCE WITH THE REQUIREMENTS OF THE PROJECT GEOTECHNICAL REPORT. WHERE STRUCTURAL CONTRACT DOCUMENTS CONFLICT WITH THE GEOTECHNICAL REPORT, THE MORE RESTRICTIVE LIMITATION SHALL APPLY.
2. BACKFILLING SHALL BE DONE WITH TYPE C SAND: NATURAL RIVER OR BANK SAND, WASHED FREE OF SILT, CLAY, LOAM, FRIABLE OR SOLUBLE MATERIALS, AND ORGANIC MATTER. FILL SHALL BE GRADED IN ACCORDANCE WITH ANSI/ASTM C136 WITHIN THE FOLLOWING LIMITS, UNLESS DIRECTED OTHERWISE IN THE GEOTECHNICAL REPORT:

SIEVE SIZE:	PERCENT PASSING:
NO. 4	100
NO. 14	10-100
NO. 50	5-90
NO. 100	4-30
NO. 200	0-1

3. VERIFY EXISTING CONDITIONS AND SUBSTRATE ARE SUITABLE PRIOR TO BACKFILLING.
4. VERIFY EXCAVATED MATERIALS TO BE REUSED AS FILL MATERIAL ARE ACCEPTABLE PRIOR TO BACKFILLING.
5. COMPACT SUBGRADE TO 95 PERCENT MAXIMUM DRY DENSITY IN ACCORDANCE WITH ANSI/ASTMD1557.
6. CUT OUT SOFT AREAS OF SUBGRADE NOT CAPABLE OF IN-SITU COMPACTION. BACKFILL AND COMPACT TO DENSITY EQUAL TO OR GREATER THAN REQUIREMENTS FOR SUBSEQUENT BACKFILL MATERIAL.
7. BACKFILL AREAS WITH UNFROZEN MATERIALS.
8. SYSTEMATICALLY BACKFILL TO ALLOW MAXIMUM TIME FOR NATURAL SETTLEMENT. DO NOT BACKFILL OVER POROUS, WET, FROZEN OR SPONGY MATERIALS. REMOVE ANY STANDING WATER PRIOR TO BACKFILLING.
9. PLACE AND COMPACT MATERIALS IN CONTINUOUS LAYERS NOT EXCEEDING 6 INCHES COMPACTED DENSITY.
10. ALL BACKFILL MATERIALS SHALL BE COMPACTED TO 95 PERCENT MAXIMUM DRY DENSITY IN ACCORDANCE WITH ANSI/ASTM D1557. MAINTAIN OPTIMUM MOISTURE CONTENT TO ATTAIN REQUIRED DENSITY.
11. AT COMPLETION OF BASEMENT OR FOUNDATION WALL CONSTRUCTION, BACKFILL SHALL BE PLACED LEVEL WITH FINAL TOP OF WALL ELEVATION. IF FINAL GRADING, PAVING, LANDSCAPING AND/OR STORM DRAINAGE INSTALLATION ADJACENT TO THE WALL IS NOT PLACED IMMEDIATELY AFTER COMPLETION, TEMPORARY GRADING AND DRAINAGE SHALL BE PROVIDED TO ENSURE WATER RUNOFF IS NOT DIRECTED AT THE WALL OR ALLOWED TO COLLECT OR POND BEHIND THE WALL UNTIL FINAL CONSTRUCTION ADJACENT TO THE WALL IS COMPLETED.
12. DO NOT BACKFILL AGAINST BASEMENT WALL UNTIL FIRST FLOOR FRAMING IS INSTALLED. BASEMENT WALLS ARE TO BE ADEQUATELY BRACED AGAINST CONSTRUCTION ACTIVITIES UNTIL FIRST FLOOR FRAMING IS FULLY INSTALLED.

FOUNDATION NOTES:

1. FOUNDATION DESIGN IS BASED UPON THE GEOTECHNICAL ENGINEERING REPORT PROVIDED BY WHITESTONE ASSOCIATES ENGINEERING & GEOLOGY NY, PLLC , DATED 09/23/2024. COORDINATE STRUCTURAL PLANS AND DETAILS WITH REQUIREMENTS OF GEOTECHNICAL REPORT AND ANY ADDENDUMS THERETO.
2. FOOTING DESIGN IS BASED ON 3,000 PSF NET ALLOWABLE SOIL BEARING PRESSURE.
3. REFER TO THE GEOTECHNICAL REPORT AND THE PROJECT SPECIFICATIONS FOR GENERAL REQUIREMENTS OF EARTHWORK, EXCAVATION, SUBGRADE PREPARATION, FILL AND COMPACTION, WATERPROOFING, AND OTHER PERTINENT REQUIREMENTS AND INFORMATION. IF THERE IS A CONFLICT BETWEEN GEOTECHNICAL REPORT AND STRUCTURAL PLANS OR SPECIFICATIONS, THE MORE STRINGENT CRITERIA SHALL APPLY UNLESS OTHERWISE DIRECTED BY AN RFI.
4. PROTECT PIPES AND CONDUITS RUNNING THROUGH WALLS AND SLABS WITH 1/2 INCH EXPANSION JOINT MATERIAL. LOWER CONTINUOUS FOOTINGS AND GRADE BEAMS PERPENDICULAR TO PIPE RUNS TO ALLOW PIPES TO PASS ABOVE THE FOOTING. LOWER FOOTING AND GRADE BEAMS PARALLEL TO PIPE RUNS TO AVOID DISCHARGE ONTO ADJACENT TRENCH EXCAVATIONS.
5. MAINTAIN SPECIFIED SUBGRADE AND FILL MOISTURE CONTENT UNTIL FOUNDATIONS ARE PLACED.
6. ARRANGE FOR OWNER'S INDEPENDENT TESTING AGENCY TO MONITOR CUT AND FILL OPERATIONS AND PERFORM FIELD DENSITY AND MOISTURE CONTENT TESTS TO VERIFY COMPACTION AND APPROVE FOOTING SUBGRADES PRIOR TO PLACING CONCRETE.
7. DO NOT PLACE FOOTINGS OR SLABS AGAINST SUBGRADE CONTAINING FREE WATER, FROST OR ICE.
8. MAINTAIN PROPER SITE DRAINAGE DURING CONSTRUCTION TO ENSURE SURFACE RUNOFF AWAY FROM STRUCTURES AND TO PREVENT PONDING OF SURFACE RUNOFF NEAR THE STRUCTURES.

CONCRETE NOTES:

1. PROVIDE BATCH MIXING, TRANSPORTATION, PLACING, AND CURING OF CONCRETE IN ACCORDANCE WITH RECOMMENDATIONS OF ACI 301 AND ACI 318, LATEST EDITIONS.
2. USE TYPE I PORTLAND CEMENT UNLESS NOTED OTHERWISE. PROVIDE ADMIXTURES AND SPECIAL REQUIREMENTS AS SPECIFIED. REFER TO PROJECT SPECIFICATIONS FOR ADDITIONAL INFORMATION.
3. ALL CONCRETE SHALL BE NORMAL WEIGHT (145 PCF) CONCRETE, U.O.N.
4. CONCRETE SHALL HAVE A 28-DAY COMPRESSIVE STRENGTH (f'c) AS FOLLOWS:

A. FOOTINGS, PIERS, AND FOUNDATION WALLS	4,000 PSI
B. SLABS-ON-GRADE	4,000 PSI
C. SLAB ON METAL DECK	4,000 PSI
D. ALL OTHER CONCRETE, U.O.N.	4,000 PSI

5. ALL CONCRETE SHALL HAVE A MAXIMUM WATER-CEMENT RATIO OF 0.50 +/- 0.10.
6. ALL CONCRETE SHALL BE AIR-ENTRAINED, WITH AN AIR CONTENT OF 6% +/- 1%, EXCEPT WHERE SLABS ARE TROWELED (USE AIR ENTRAINMENT OF 3% MAXIMUM.)
7. PROVIDE CONCRETE MIXES DESIGNED BY A QUALIFIED TESTING LABORATORY FOR REVIEW AND APPROVAL BY THE STRUCTURAL ENGINEER. CONCRETE MIXES SHALL INCLUDE ALL PROPOSED ADMIXTURES, AND WEIGHTS/VOLUMES OF ALL COMPONENT MATERIALS, INCLUDING SOURCE AND/OR MANUFACTURER PRODUCT INFORMATION. CONCRETE MIX DESIGNS SHALL BE PROVIDED FOR EACH TYPE OF CONCRETE REQUIRED ON PROJECT.
8. PROVIDE CONSTRUCTION AND CONTROL JOINTS AS REQUIRED BY ACI CODE AND AS INDICATED ON DRAWINGS. HORIZONTAL CONSTRUCTION JOINTS ARE NOT ALLOWED UNLESS SPECIFICALLY NOTED OR APPROVED BY STRUCTURAL ENGINEER. SUBMIT PLAN TO ENGINEER INDICATING PROPOSED CONTROL AND EXPANSION JOINT LOCATIONS IN CONCRETE SLABS FOR REVIEW AND APPROVAL PRIOR TO INSTALLATION.
9. CONCRETE SHALL BE PLACED AND CURED IN ACCORDANCE WITH ACI 305.1 AND ACI 305R FOR HOT-WEATHER CONCRETING.
10. CONCRETE SHALL BE PLACED AND CURED IN ACCORDANCE WITH ACI 306.1 AND ACI 306R FOR COLD-WEATHER CONCRETING. DO NOT PLACE CONCRETE AGAINST FROZEN SURFACES.
11. CHAMFER EXPOSED CONCRETE EDGES 3/4 INCH, UNLESS NOTED OTHERWISE.
12. WIRE BRUSH AND CLEAN CONSTRUCTION JOINTS PRIOR TO POURING NEW CONCRETE.
13. PROVIDE ADEQUATE STRUCTURAL FRAMING AS APPROVED BY STRUCTURAL ENGINEER FOR MECHANICAL OPENINGS THROUGH THE SLABS, WALLS AND FLOOR DECK.
14. PROVIDE BROOM FINISH ON ALL SLABS, U.O.N. COORDINATE FINISH WITH ARCHITECTURAL AND/OR CIVIL DRAWINGS. FOR SIDEWALKS, PROVIDE FINISH PERPENDICULAR TO DIRECTION OF TRAVEL.

CONCRETE REINFORCING NOTES:

1. PROVIDE DETAILING, FABRICATION, AND INSTALLATION OF REINFORCING AND ACCESSORIES IN ACCORDANCE WITH ACI 301, ACI 315, AND ACE 318, LATEST VERSIONS.
2. PROVIDE NEW BILLET STEEL REINFORCING BARS IN ACCORDANCE WITH ASTM A615, GRADE 60.
3. COORDINATE PLACEMENT OF CAST-IN-PLACE EMBEDS AND ANCHOR RODS. SET ANCHOR RODS WITH A TEMPLATE. SECURELY ATTACH EMBEDDED ITEMS TO FORMWORK OR REINFORCING.
4. PROVIDE CLASS "B" REINFORCEMENT SPLICES FOR CONTINUOUS REINFORCEMENT. PROVIDE STANDARD 90-DEGREE HOOKS IN ACCORDANCE WITH ACI 318, UNLESS NOTED OTHERWISE.
5. MAINTAIN THE FOLLOWING CONCRETE COVERAGE FOR REINFORCING STEEL UNLESS NOTED OTHERWISE:
   A. CONCRETE CAST AGAINST EARTH: 3 INCHES
   B. CONCRETE EXPOSED TO WEATHER:
      NO. 6 AND LARGER: 2 INCHES
      NO. 5 AND SMALLER: 1 1/2 INCHES
   C. CONCRETE NOT EXPOSED TO WEATHER AND NOT IN CONTACT WITH THE GROUND:
      SLABS AND WALLS, NO. 11 AND SMALLER: 3/4 INCHES
6. DO NOT WELD OR BEND REINFORCEMENT IN THE FIELD UNLESS SPECIFICALLY SHOWN OR APPROVED BY STRUCTURAL ENGINEER.
7. WHEN SPECIFICALLY APPROVED, PROVIDE WELDED REINFORCEMENT IN ACCORDANCE WITH ASTM A706, GRADE 60. USE LOW HYDROGEN ELECTRODES FOR WELDING OF REINFORCEMENT IN CONFORMANCE WITH "RECOMMENDED PRACTICES FOR WELDING REINFORCING STEEL," AMERICAN WELDING SOCIETY, AWS D12.1.
8. WHERE REQUIRED, PROVIDE DOWELS TO MATCH SIZE AND SPACING OF MAIN REINFORCING, U.O.N.
9. COORDINATE PLACEMENT OF REINFORCING DOWELS TO MASONRY WALLS WITH MASONRY WALL CELL LOCATIONS.
10. PROVIDE CONTINUOUS HORIZONTAL WALL REINFORCEMENT WITH 90-DEGREE BENDS AND EXTENSIONS AT CORNERS AND INTERSECTIONS AS SHOWN ON TYPICAL BAR PLACING DETAILS.

STRUCTURAL STEEL NOTES:

1. DETAIL, FABRICATE, AND ERECT STRUCTURAL STEEL IN ACCORDANCE WITH THE FOLLOWING, LATEST EDITIONS:
   A. AISC 360, "SPECIFICATION FOR STRUCTURAL STEEL BUILDINGS"
   B. AISC MANUAL OF STEEL CONSTRUCTION
   C. AISC 303, "CODE OF STANDARD PRACTICE FOR STEEL BUILDINGS AND BRIDGES"
   D. AWS D1.1, "STRUCTURAL WELDING CODE"
2. PROVIDE STRUCTURAL STEEL OF THE FOLLOWING ASTM DESIGNATIONS, UNLESS NOTED OTHERWISE:

A. WIDE FLANGE SHAPES:	A992
B. CHANNELS, ANGLES, AND PLATES:	A36
C. HOLLOW STRUCTURAL SECTIONS, RECTANGULAR:	A500, GR. C
D. HOLLOW STRUCTURAL SECTIONS, CIRCULAR:	A500, GR. C
E. STRUCTURAL PIPE:	A53, GR. B
F. HIGH-STRENGTH PLATES:	A572, GR. 50
G. ANCHOR RODS:	F1554, GR. 36

3. PROVIDE CONNECTION MATERIALS OF THE FOLLOWING ASTM DESIGNATIONS, U.O.N.:
   A. STIFFENER AND DOUBLER PLATES TO MATCH THE GRADE OF PRIMARY STRUCTURAL MEMBER.

B. HIGH STRENGTH BOLTS:	F3125, GR. A325
C. HARDENED STEEL WASHERS:	F436
D. THREADED RODS:	A36

4. WELD MINIMUM SIZE AND STRENGTH:
   A. FILLET WELDS SHALL NOT BE SMALLER THAN THE MINIMUM SIZE SPECIFIED IN TABLE J2.4 OF THE AISC MANUAL.
   B. PROVIDE MINIMUM EFFECTIVE THROAT THICKNESS OF PARTIAL PENETRATION GROOVE WELDS AS SPECIFIED IN TABLE J2.3 OF THE AISC MANUAL.
   C. SIZE WELDS IN TENSION CONNECTIONS TO DEVELOP THE FULL TENSILE STRENGTH OF THE MEMBER ELEMENT JOINED ON ALL SHOP AND FIELD WELDS, UNLESS NOTED OTHERWISE ON DRAWINGS.
   D. WHERE CONNECTIONS ARE NOTED ON DRAWINGS AS MOMENT CONNECTIONS, PROVIDE WELDS TO DEVELOP THE FULL FLEXURUAL CAPACITY OF THE LESSER MEMBER.
      PROVIDE ELECTRODES FOR FIELD AND SHOP WELDING THAT CONFORM TO ASTM A233 (CLASS 70).
   E. ALL WELDS ARE CONTINUOUS FOR THE FULL LENGTH OF THE CONNECTION, UNLESS NOTED OTHERWISE ON DRAWINGS.
5. PROVIDE MINIMUM OF TWO BOLTS PER BOLTED CONNECTION. MINIMUM BOLT DIAMETER SHALL BE 3/4 INCH.
6. PROVIDE BOLTS, NUTS, AND WASHERS THAT ARE HOT DIP GALVANIZED ACCORDING TO ASTM A153, CLASS C, WHEN USED TO CONNECT STEEL ELEMENTS THAT ARE HOT DIP GALVANIZED AFTER FABRICATION.
7. SUBMIT CALCULATIONS FOR CONNECTION DESIGNS NOT FULLY DETAILED ON DRAWINGS. DESIGN CONNECTIONS UNDER SUPERVISION OF A REGISTERED PROFESSIONAL ENGINEER LICENSED IN THE STATE WHERE PROJECT IS BEING CONSTRUCTED, AND EMPLOYED BY THE STEEL FABRICATOR. DESIGN CALCULATIONS SHALL BE SIGNED AND SEALED BY FABRICATOR'S REGISTERED PROFESSIONAL ENGINEER. SHOP DRAWINGS SUBMITTED WITHOUT COMPLETE DESIGN CALCULATIONS MAY NOT BE REVIEWED.
8. PROVIDE SIMPLE SHEAR CONNECTIONS FOR STEEL CONNECTIONS NOT FULLY DETAILED BY UTILIZING HIGH STRENGTH BEARING BOLTS IN SINGLE OR DOUBLE SHEAR. PROVIDE DOUBLE ANGLE BOLTED CONNECTIONS WHERE POSSIBLE. CONNECTION DESIGNER SHALL DESIGN SHEAR CONNECTION FOR THE LARGER OF:
   A. REACTION SHOWN ON DRAWINGS, OR
   B. MAXIMUM END REACTION RESULTING FROM THE APPLICATION OF THE ALLOWABLE UNIFORM LOADS LISTED IN TABLES OF PART 2 OF THE AISC MANUAL OF STEEL CONSTRUCTION, PLUS ANY LOADS OR REACTIONS OF MEMBERS SUPPORTED BY BEAM WITHIN THREE FEET OF BEAM END AND VERTICAL COMPONENTS OF FORCES IN BRACE MEMBERS FRAMING INTO BEAM.
9. STEEL FABRICATION:
   A. FABRICATE AND ASSEMBLE STRUCTURAL MEMBERS / ASSEMBLIES IN SHOP TO GREATEST EXTENT POSSIBLE.
   B. SPLICING OF STRUCTURAL STEEL MEMBERS IS PROHIBITED WITHOUT PRIOR APPROVAL OF THE ENGINEER OF RECORD.
   C. FABRICATOR SHALL BE RESPONSIBLE FOR ALL ERRORS OF DETAILING ON THE SHOP DRAWINGS, ERRORS IN FABRICATION, AND THE CORRECT FITTING OF STRUCTURAL STEEL MEMBERS.
   D. ERECTION TOLERANCES SHALL CONFORM TO THE AISC CODE OF STANDARD PRACTICE.
   E. FIELD MODIFICATION OF STRUCTURAL STEEL IS PROHIBITED WITHOUT PRIOR APPROVAL OF THE ENGINEER OF RECORD.
   F. CLEAN STEEL OF RUST, LOOSE MILL SCALE, AND OTHER FOREIGN MATERIALS WHERE REQUIRED FOR FABRICATION, FITTING UP, WELDING, PRIMING, OR PAINTING.
   G. DO NOT CUT STRUCTURAL STEEL MEMBERS FOR THE WORK OF OTHER TRADES WITHOUT PRIOR REVIEW AND APPROVAL OF THE ENGINEER OF RECORD.
10. HOT DIP GALVANIZE AFTER FABRICATION ALL STRUCTURAL STEEL AND THEIR CONNECTIONS PERMANENTLY EXPOSED TO WEATHER OR CORROSIVE ENVIRONMENTS. ITEMS INCLUDED BUT NOT LIMITED TO:
    A. SHELF ANGLES
    B. LOOSE LINTELS
    C. PLATES EMBEDDED IN CONCRETE
11. EXAMINE THE ARCHITECTURAL AND STRUCTURAL DRAWINGS FOR OTHER ITEMS THAT REQUIRE HOT-DIPPED GALVANIZATION.
12. PROVIDE DECK SUPPORT PLATES AND/OR ANGLES AT ALL COLUMNS.
13. FURNISH STEEL SHOP DRAWINGS FOR ARCHITECT'S AND STRUCTURAL ENGINEER'S REVIEW PRIOR TO FABRICATION. INCLUDE WELDING PROCEDURES, TESTING PROGRAMS FOR WELDING AND HIGH STRENGTH BOLTING, COATING MATERIAL, AND ERECTION SEQUENCE ON SHOP DRAWINGS. SHOP DRAWINGS SHALL NOT BE REPRODUCTIONS OF CONTRACT DOCUMENTS. SHOP DRAWINGS SHALL BE PREPARED UNDER THE SUPERVISION OF A LICENSED PROFESSIONAL ENGINEER REGISTERED IN THE STATE OF THE PROPOSED CONSTRUCTION, AND ALL DRAWINGS AND CALCULATIONS SHALL BE SIGNED AND SEALED BY SAID ENGINEER.
14. HEADED STUDS (SHEAR AND ANCHOR) AND DEFORMED ANCHORS:
    A. PROVIDE HEADED STUDS (SHEAR AND ANCHOR) MADE OF MATERIALS CONFORMING TO ASTM A108.
    B. PROVIDE DEFORMED ANCHORS MADE OF MATERIAL CONFORMING TO ASTM A496.
    C. WELD STUDS ACCORDING TO MANUFACTURER'S RECOMMENDATIONS. MANUAL ARC (STICK) WELDING OF HEADED STUDS AND/OR DEFORMED ANCHORS IS NOT ALLOWED.

H2M architects + engineers
538 Broad Hollow Road, 4th Floor East
Melville, NY 11747
631.756.8000 ▪ www.h2m.com
NY Architecture & Landscape Architecture: No Certificate Required
NY Engineering Certificate of Authorization No.: 0018178

CONSULTANTS:

MARK	DATE	DESCRIPTION

STATE OF NEW YORK · DANIEL J. AIELLO · LICENSED PROFESSIONAL ENGINEER · 100515

04/30/2027
Exp. Date
DANIEL J. AIELLO, P.E.
NY PROFESSIONAL ENGINEER Lic. No. 100515

"IN ACCORDANCE WITH ARTICLE 145, SECTION 7209 OF THE NYS EDUCATION LAW, ALTERATION OF THIS DOCUMENT EXCEPT BY A LICENSED PROFESSIONAL IS ILLEGAL"

DESIGNED BY:	DRAWN BY:	CHECKED BY:	REVIEWED BY:
JJN	SRK	JJN	DJA

PROJECT No:	DATE:	SCALE:
TRFD 2302	FEBRUARY 2025	AS SHOWN

CLIENT
THIELLS ROSEVILLE FIRE DISTRICT

NEW 26-100 FIRE HEADQUARTERS

65 W RAMAPO ROAD
GARNERVILLE, NY 10923

CONTRACT
CONTRACT G

STATUS
FINAL BID DOCUMENT

SHEET TITLE
GENERAL NOTES

DRAWING No.
S 001.00

C:\Users\jneubauer\Documents\TRFD2302_Central23-S_jneubauerLCLC5.rvt
2/25/2025 12:04:53 PM

MASONRY NOTES:

1. CONSTRUCT MASONRY IN ACCORDANCE WITH THE AMERICAN CONCRETE INSTITUTE ACI-530 / ASCE 5 / TMS 402, LATEST EDITION "BUILDING CODE REQUIREMENTS FOR MASONRY STRUCTURES."
2. PROVIDE CONCRETE MASONRY UNITS (CMU) CONFORMING TO ASTM C90 GRADE N, WITH A MINIMUM NET COMPRESSIVE STRENGTH (F'M) OF 2,000 PSI. MASONRY STRENGTH SHALL BE DETERMINED BY THE UNIT STRENGTH METHOD OR THE PRISM TEST METHOD AS DESCRIBED BY ACI 530.
3. PROVIDE MORTAR CONFORMING TO THE REQUIREMENTS OF ASTM C-270, TYPE S (OR AS APPLICABLE). CEMENT USED FOR MORTAR SHALL BE PORTLAND CEMENT WITH A MINIMUM 28-DAY COMPRESSIVE STRENGTH OF 750 PSI.
4. PROVIDE GROUT CONFORMING TO THE REQUIREMENTS OF ASTM C476 COARSE GROUT, WITH A MINIMUM COMPRESSIVE STRENGTH OF 3,000 PSI AT 28 DAYS.
5. PROVIDE REINFORCING BARS CONFORMING TO ASTM A615, GRADE 60. ALL WELDED REINFORCING SHALL BE ASTM A706. PROVIDE SPACERS AND TIES AS NEEDED TO PROPERLY SECURE REINFORCING PRIOR TO GROUTING. ALL CELLS WITH REINFORCING SHALL BE FULLY GROUTED.
6. MASONRY SHALL COMPLY WITH THE TYPICAL DETAILS FOR CONCRETE MASONRY WALL REINFORCING AND CONCRETE MASONRY OPENING REINFORCING AS SHOWN IN THE STRUCTURAL DRAWINGS.
7. SPECIAL INSPECTION IS REQUIRED ON ALL MASONRY WALLS, IN ACCORDANCE WITH BUILDING CODE REFERENCED ABOVE.
8. LAP REINFORCING IN ACCORDANCE WITH ACI 530, UNLESS INDICATED OTHERWISE IN STRUCTURAL DRAWINGS.
9. MORTARED CELLS SHALL BE PLACED CONTINUOUSLY AT THE ELEVATION OF CONSTRUCTION AND SHALL NOT BE PERMITTED TO BE PUMPED OR PLACED FROM ABOVE. GROUTING OF THE MASONRY CELLS SHALL BE PERMITTED IN THE INSTANCES WHERE CONTINUOUS MORTAR PLACEMENT CANNOT BE ACHIEVED.
10. MAXIMUM HEIGHT TO WHICH MASONRY SHALL BE LAID BEFORE GROUTING IS 5 FEET. MAXIMUM GROUT PLACEMENT HEIGHT IS 5 FEET. IF GROUT PLACEMENT HEIGHT EXCEEDS 5 FEET, PROVIDE CLEANOUT OPENINGS AT THE BOTTOM OF EACH PLACEMENT. CLEANOUT OPENINGS SHALL BE PROVIDED AT EACH CELL TO BE FILLED WITH GROUT.
11. REINFORCE MASONRY WHERE SHOWN ON STRUCTURAL DRAWINGS. TIE REINFORCING IN POSITION AND PLACE GROUT AROUND REINFORCING. DO NOT PUSH REINFORCING DOWN INTO PREVIOUSLY PLACED GROUT FILL. SET ANCHOR BOLTS SIMILARLY.
12. HORIZONTAL JOINT REINFORCEMENT SHALL NOT EXTEND THROUGH EXPANSION JOINTS IN THE MASONRY. JOINT REINFORCEMENT SHALL BE PLACED CONTINUOUSLY WITH THE ENDS LAPPED 6" FOR DEFORMED BARS AND 12" FOR SMOOTH BARS.
13. TIE MASONRY WYTHES TOGETHER WITH HORIZONTAL REINFORCING AS SPECIFIED.
14. PROVIDE VERTICAL BARS, SIZE AND SPACING MATCHING WALL REINFORCING, AT ALL CORNERS, ENDS OF WALLS, EACH SIDE OF CONTROL JOINTS, AND EACH SIDE OF WALL OPENINGS. SEE ARCHITECTURAL DRAWINGS FOR LOCATIONS OF CONTROL JOINTS.
15. ALL CORNERS AND INTERSECTIONS OF STRUCTURAL MASONRY WALLS SHALL BE CONSTRUCTED BY INTERLOCKING COURSE.
16. ALL LINTELS SHALL BEAR 8" MINIMUM EACH SIDE OF OPENING ON SOLID GROUTED CELLS, UNLESS NOTED OTHERWISE.
17. VERTICAL BARS INTERRUPTED BY STEEL FRAMING SHALL BE WELDED TO TOP OF STEEL FRAMING, OR FASTENED TO TOP OF STEEL WITH REBAR COUPLERS WELDED TO TOP OF STEEL.
18. MORTAR BED JOINTS SHALL NOT EXCEED 3/8" THICKNESS, OR AS SPECIFIED IN EXPOSED AREAS WITH TIGHTER BED JOINT TOLERANCE.
19. COORDINATE PLACEMENT OF VERTICAL WALL DOWELS EMBEDDED INTO FOUNDATIONS AND FLOOR SLABS WITH CELLS OF MASONRY WALL. DOWEL SIZE AND SPACING TO MATCH VERTICAL WALL REINFORCING, U.O.N.
20. REFER TO ARCHITECTURAL DRAWINGS FOR NON-STRUCTURAL MASONRY PARTITION WALL CONSTRUCTION..

METAL DECK NOTES:

1. DESIGN, FABRICATE, AND ERECT METAL DECK IN CONFORMANCE WITH THE STEEL DECK INSTITUTE (SDI) "CODE OF RECOMMENDED STANDARD PRACTICE AND BASIC DESIGN SPECIFICATIONS".
2. FORM ROOF AND FLOOR DECK FROM STEEL SHEETS CONFORMING TO ASTM A611 GRADE C AND D OR A653 OR HIGHER SPECIFICATIONS WITH A MINIMUM YIELD STRENGTH OF 33 KSI.
3. METAL DECK PANELS ARE TO BE 3-SPAN CONTINUOUS, UNLESS OTHERWISE NOTED.
4. PROVIDE SHORING FOR METAL DECK IN ACCORDANCE WITH MANUFACTURER'S RECOMMENDATIONS AND AS INDICATED METAL DECK ERECTION DRAWINGS.
5. ATTACH METAL DECK TO STEEL SUPPORT MEMBERS AS INDICATED AND IN ACCORDANCE WITH THE MANUFACTURER'S INSTRUCTIONS FOR INSTALLATION. WHEN DECK IS SCHEDULED TO BE EXPOSED, DE-SLAG, CLEAN, AND TOUCH UP WELDS WITH ZINC-RICH PRIMER.
6. LAP METAL DECK ENDS MINIMUM OF 2 INCHES.
7. WHEN FASTENING DECK TO SUPPORT MEMBERS WITH WELDS, PROVIDE WELDING MATERIALS INSTALLATION PROCEDURES TO PREVENT BURNING OF HOLES IN DECK. PROVIDE WELD WASHERS WHERE REQUIRED.
8. PROVIDE CLOSURE STRIP WHERE CHANGES IN DECK DIRECTION OCCUR. CLOSURE TO BE SAME DEPTH AND GUAGE AS DECK.
9. AT ENDS OF DECKS OR WHERE CHANGES OF DECK DIRECTION OCCUR, FASTEN DECK TO SUPPORTS AT EACH FLUTE. FASTEN SIDES OF DECK TO CLOSURES OR SUPPORTING MEMBERS PER SIDELAP FASTENING REQUIREMENTS.
10. WHERE PARTIAL PANELS MAY BE REQUIRED TO COMPLETE DECK INSTALLATION AT PERIMETER OF STRUCTURE, FASTEN DECK TO SUPPORTING STRUCTURAL MEMBERS AT EACH FLUTE. INSTALL PARTIAL DECK PIECES IN THREE CONTINUOUS SPAN LENGTHS.
11. AT PERIMETER OF DECK, SECURE DECK TO STRUCTURAL MEMBERS WITH SAME ATTACHMENT AND SPACING SUPPORT ATTACHMENT AS INDICATED ON PLANS.
12. DECK SUPPLIER IS RESPONSIBLE FOR PROVIDING CLOSURES AND POUR STOPS AT ALL TERMINATIONS OR CHANGES IN DIRECTION OF METAL DECK. ALL DECKING ACCESSORIES SHALL BE INCLUDED IN METAL DECK SHOP DRAWINGS FOR REVIEW AND APPROVAL.

COLD-FORMED STEEL NOTES:

1. COLD-FORMED STEEL FRAMING SHALL BE DESIGNED, FABRICATED, AND ERECTED IN ACCORDANCE WITH THE AMERICAN IRON AND STEEL INSTITUTE (AISI) "SPECIFICATIONS FOR THE DESIGN OF COLD-FORMED STEEL STRUCTURAL MEMBERS", LATEST EDITION.
2. PROVIDE ALL STUDS AND/OR JOISTS AND ACCESSORIES OF THE TYPE, SIZE, GAUGE, AND SPACING SHOWN ON THE DRAWINGS.
3. FORM ALL FRAMING MEMBERS AND ACCESSORIES FROM CORROSION RESISTANT STEEL, CORRESPONDING TO REQUIREMENTS OF ASTM A653 AND THE FOLLOWING STRENGTH REQUIREMENTS:
   A. MATERIAL WITH A THICKNESS OF 18 GA (43 MIL) OR THINNER SHALL HAVE MINIMUM YIELD STRENGTH OF 33 KSI.
   B. MATERIAL WITH A THICKNESS OF 16 GA (54 MIL) OR THICKER SHALL HAVE A MINIMUM YIELD STRENGTH OF 50 KSI.
4. PLACE ALL COLD-FORMED STEEL STUD WALL BRIDGING HORIZONTALLY WITH A MAXIMUM VERTICAL SPACING OF FOUR FEET, UNLESS NOTED OTHERWISE. AS AN OPTION, CONTINUOUS COLD-FORMED CHANNELS MAY BE POSITIONED THROUGH THE STUD PUNCH OUTS AS BRIDGING PROVIDED THE BRIDGING CHANNEL IS PROPERLY FASTENED TO EACH STUD. STUDS WITH A MEMBER DEPTH OF EIGHT (8) INCHES OR GREATER SHALL USE CONTINUOUS FLAT STRAP BRIDGING ON EACH SIDE OF THE WALL.
5. BRIDGING SHALL BE SECURELY ANCHORED TO A POST, STRONGBACK, BRACE, OR OTHER SUPPORTING MEMBER PER WALL DESIGN, OR NOT FARTHER THAN EVERY 24 FEET ON CENTER.
6. INSTALL AXIALLY LOADED STUDS IN A MANNER WHICH WILL ASSURE THAT THEIR ENDS ARE POSITIONED AGAINST THE INSIDE OF THE TRACK WEB PRIOR TO FASTENING.
7. FASTEN COMPONENTS WITH SELF-DRILLING SCREWS OR WELDING. PROVIDE SCREWS OF SUFFICIENT SIZE TO ENSURE THE STRENGTH OF THE CONNECTION. WIRE TYING OF COMPONENTS IS NOT PERMITTED. TOUCH UP ALL WELDS WITH A ZINC-RICH PAINT.
8. WELDING OF COLD-FORMED STUDS MAY BE PERFORMED USING A MINIMUM ONE-EIGHTH INCH AWS TYPE 6013 WELDING ROD.
9. SECURELY ANCHOR WALL TRACKS TO THE SUPPORTING STRUCTURE. PROVIDE COMPLETE, UNIFORM, AND LEVEL BEARING SUPPORT FOR THE BOTTOM TRACK. PROVIDE METAL OR PLASTIC SHIMS BETWEEN BOTTOM TRACK AND SLAB AT EACH WALL STUD AS NEEDED TO ENSURE FULL BEARING.
10. SECURELY ANCHOR ABUTTING LENGTHS OF WALL TRACK TO A COMMON STRUCTURAL ELEMENT, BUTT-WELDED OR SPLICED.
11. PLUMB, ALIGN, AND SECURELY ATTACH STUDS TO THE FLANGES OF BOTH UPPER AND LOWER WALL TRACKS. SPLICES IN WALL STUDS ARE NOT PERMITTED.
12. ALIGN PUNCHED OPENINGS OF WALL STUDS.
13. PROVIDE HEADERS AND SUPPORTING STUDS FOR FRAMING OF WALL OPENINGS.
14. STUD MATERIAL USED IN HEADER CONSTRUCTION SHALL BE FREE OF PUNCHED OPENINGS.
15. WHERE COLD-FORMED STEEL DESIGN HAS BEEN DELEGATED, OWNER/CONTRACTOR SHALL HIRE A SPECIALTY ENGINEER WITH EXPERIENCE IN COLD-FORMED STEEL DESIGN TO DEVELOP THE DESIGN OF THE DELEGATED COLD-FORMED STEEL MEMBERS. SPECIALTY ENGINEER RESPONSIBLE FOR COLD-FORMED STEEL DESIGN SHALL BE A LICENSED PROFESSIONAL ENGINEER REGISTERED IN THE STATE OF THE PROPOSED CONSTRUCTION. SPECIALTY ENGINEER SHALL PROVIDE A FULL SET OF COLD-FORMED STEEL ENGINEERING DRAWINGS TO THE ENGINEER OF RECORD FOR REVIEW AND APPROVAL. WHERE DELEGATED COLD-FORMED STEEL DESIGN INCLUDES BEARING WALLS, SHEAR WALLS, BRACED WALL PANELS, OR OTHER VERTICAL ELEMENTS OF THE BUILDING GRAVITY OR LATERAL SYSTEMS, DESIGN CALCULATIONS SHALL ALSO BE SUBMITTED TO THE ENGINEER OF RECORD FOR REVIEW AND APPROVAL. ALL ENGINEERING DRAWINGS AND CALCULATIONS SUBMITTED SHALL BE SIGNED AND SEALED BY THE SPECIALTY ENGINEER RESPONSIBLE FOR THE COLD-FORMED STEEL DESIGN.
16. SHOP DRAWINGS SHALL BE SUBMITTED FOR ALL PANELIZED COLD-FORM STEEL CONSTRUCTION FOR REVIEW AND APPROVAL PRIOR TO FABRICATION.
17. FOR ANY JAMB MEMBER THAT CANNOT BE SIZED AS SPECIFIED IN THE ARCHITECTURAL DRAWINGS, THE CONTRACTOR SHALL SUBSTITUTE IT WITH AN HSS STEEL POST. THE HSS STEEL POST SHALL BE DESIGNED, PROCURED, AND INSTALLED BY THE CONTRACTOR

CURTAIN WALL SYSTEM NOTES:

1. CURTAIN WALL SYSTEM SHALL BE DESIGNED TO MEET THE MOST STRINGENT MINIMUM LOADING AND SERVICEABILITY REQUIREMENTS SPECIFIED IN DESIGN NOTES HEREIN AS WELL AS INDICATED IN SPECIFICATION SECTION. CURTAIN WALL SYSTEM MUST BE DESIGNED AS A DEAD LOADED SYSTEM BEARING ON FOUNDATIONS OR STEEL BEAMS WHERE SPECIFICALLY NOTED IN PLANS. NO COMPONENTS OF THE SYSTEM SHALL BE HUNG FROM STEEL SUPPORTS ABOVE UNLESS SPECIFICALLY INDICATED IN PLANS. MANUFACTURER SUPPLIED CLIPS SHALL BE PROVIDED BY GC FOR LATERAL ATTACHMENT TO STRUCTURE.

LIST OF ABBREVIATIONS:

C/C	=	CENTER-TO-CENTER
C.J.	=	CONTROL JOINT; CEILING JOISTS
D.E.	=	DECK EDGE
E.F.	=	EACH FACE
E.J.	=	EXPANSION JOINT
E.W.	=	EACH WAY
E.O.D.	=	EDGE OF DECK
E.O.S.	=	EDGE OF SLAB
I.F.	=	INSIDE FACE
O.C.	=	ON CENTER
O.F.	=	OUTSIDE FACE
O.H.	=	OPPOSITE HAND
R.R.	=	ROOF RAFTERS
S.O.G.	=	SLAB-ON-GRADE
T.O.D.	=	TOP OF DECK
T.O.F.	=	TOP OF FOOTING
T.O.P.	=	TOP OF PIER/PEDESTAL
T.O.S.	=	TOP OF SLAB; TOP OF STEEL
T.O.Sh.	=	TOP OF SHELF
T.O.W.	=	TOP OF WALL
TYP.	=	TYPICAL
U.N.O.	=	UNLESS NOTED OTHERWISE
U.O.N.	=	UNLESS OTHERWISE NOTED
W.P.	=	WORKING POINT

SPECIAL INSPECTIONS:

SPECIAL INSPECTION SHALL MEET THE REQUIREMENTS OF THE ABOVE REFERENCED BUILDING CODE, CHAPTER 17. SPECIAL INSPECTOR(S) SHALL BE RETAINED BY THE OWNER TO PERFORM THE REQUIRED SPECIAL INSPECTIONS. THE NAMES AND QUALIFICATIONS OF THE PERSONS AND/OR FIRMS WHO ARE TO PERFORM THE SPECIAL INSPECTIONS SHALL BE PROVIDED TO THE BUILDING OFFICIAL FOR APPROVAL PRIOR TO THE START OF CONSTRUCTION. THE SPECIAL INSPECTOR(S) SHALL COMPLETE AND SUBMIT ALL FORMS, REPORTS, AND CERTIFICATES REQUIRED BY THE JURISDICTION WHERE CONSTRUCTION OR WORK IS LOCATED.

1. THE SPECIAL INSPECTOR(S) SHALL:
   A. OBSERVE THE WORK ASSIGNED FOR CONFORMANCE TO THE APPROVED DRAWINGS AND SPECIFICATIONS.
   B. FURNISH INSPECTION REPORTS TO ENGINEER OF RECORD AND BUILDING DEPARTMENT. DISCREPANCIES SHALL BE BROUGHT TO THE IMMEDIATE ATTENTION OF THE CONTRACTOR FOR CORRECTION, THEN, IF NOT CORRECTED, TO THE ATTENTION OF THE ENGINEER AND THE BUILDING DEPARTMENT.
   C. SUBMIT TO THE ENGINEER OF RECORD AND THE BUILDING DEPARTMENT A SIGNED FINAL REPORT STATING THAT THE WORK WAS IN CONFORMANCE WITH THE APPROVED DRAWINGS AND SPECIFICATIONS AND THE APPLICABLE WORKMANSHIP PROVISIONS OF THE BUILDING CODE.
2. SPECIAL INSPECTION NOTES:
   A. WHERE FABRICATION OF STRUCTURAL LOAD-BEARING MEMBERS AND ASSEMBLIES IS BEING PERFORMED ON THE PREMISES OF A FABRICATOR'S SHOP, SPECIAL INSPECTION OF THE FABRICATED ITEMS IS REQUIRED DURING THE PERFORMANCE OF THE WORK EXCEPT WHERE THE FABRICATOR HAS BEEN APPROVED TO PERFORM THE WORK WITHOUT SPECIAL INSPECTION IN ACCORDANCE WITH THE APPLICABLE BUILDING CODE. WHERE SPECIAL INSPECTION HAS BEEN EXEMPTED DURING FABRICATION, FABRICATOR SHALL SUBMIT A CERTIFICATE OF COMPLIANCE IN LIEU OF THE INSPECTION, STATING THAT THE WORK WAS PERFORMED IN ACCORDANCE WITH THE CONSTRUCTION DOCUMENTS.
   B. IT IS THE RESPONSIBILITY OF THE CONTRACTOR TO PROVIDE THE SPECIAL INSPECTOR(S) WITH ADVANCE NOTICE, NO LESS THAN 72 HOURS, OF THE INITIATION OF ANY WORK REQUIRED TO HAVE SPECIAL INSPECTIONS. ALL WORK PERFORMED WITHOUT REQUIRED SPECIAL INSPECTION WILL BE SUBJECT TO REMOVAL.
   C. THE CONSTRUCTION OR WORK FOR WHICH SPECIAL INSPECTION IS REQUIRED SHALL REMAIN ACCESSIBLE AND EXPOSED FOR SPECIAL INSPECTION UNTIL COMPLETION OF THE REQUIRED INSPECTIONS AND/OR TESTS.
3. STRUCTURAL OBSERVATION NOTES:
   A. WHERE REQUIRED BY THE BUILDING CODE OR BUILDING OFFICIAL, OR ELECTED BY THE OWNER OR ENGINEER OF RECORD, THE ENGINEER OF RECORD OR A DESIGNATED REGISTERED PROFESSIONAL ENGINEER ACTING ON THE OWNER'S OR ENGINEER'S BEHALF MAY PERFORM STRUCTURAL OBSERVATIONS DURING CONSTRUCTION.
   B. STRUCTURAL OBSERVATIONS DO NOT INCLUDE, OR WAIVE THE RESPONSIBILITY FOR, THE PERFORMANCE OF SPECIAL INSPECTIONS AS REQUIRED HEREIN, OR FOR ANY OTHER INSPECTIONS AS REQUIRED BY THE BUILDING CODE OR BUILDING OFFICIAL.
4. SPECIAL INSPECTIONS AND TESTS OF ELEMENTS OF BUILDINGS AND STRUCTURES SHALL MEET THE APPLICABLE REQUIREMENTS LISTED BELOW.
   A. STEEL CONSTRUCTION:
      a. STRUCTURAL STEEL:
         - SPECIAL INSPECTION AND NONDESTRUCTIVE TESTING OF STRUCTURAL STEEL ELEMENTS IN BUILDINGS, STRUCTURES, AND PORTIONS THEREOF SHALL BE IN ACCORDANCE WITH THE QUALITY ASSURANCE INSPECTION REQUIREMENTS OF AISC 360, LATEST EDITION.
      b. COLD-FORMED STEEL DECK:
         - SPECIAL INSPECTIONS AND QUALIFICATION OF WELDING SPECIAL INSPECTOR(S) FOR COLD-FORMED STEEL FLOOR AND ROOF DECK SHALL BE IN ACCORDANCE WITH THE QUALITY ASSURANCE INSPECTION REQUIREMENTS OF SDI QA/QC.
      c. OPEN-WEB STEEL JOISTS AND JOIST GIRDERS:
         - SPECIAL INSPECTIONS OF OPEN-WEB STEEL JOISTS AND JOIST GIRDERS IN BUILDINGS, STRUCTURES, AND PORTIONS THEREOF SHALL BE IN ACCORDANCE WITH BUILDING CODE TABLE 1705.2.3.
      d. COLD-FORMED STEEL TRUSSES SPANNING 60 FEET OR GREATER:
         - SPECIAL INSPECTOR SHALL VERIFY THAT THE TEMPORARY INSTALLATION RESTRAINT/BRACING AND THE PERMANENT INDIVIDUAL TRUSS MEMBER RESTRAINT/BRACING ARE INSTALLED IN ACCORDANCE WITH THE APPROVED TRUSS SUBMITTAL PACKAGE.
   B. CONCRETE CONSTRUCTION:
      a. SPECIAL INSPECTIONS OF CONCRETE CONSTRUCTION SHALL BE PERFORMED AS LISTED BELOW AND IN ACCORDANCE WITH BUILDING CODE TABLE 1705.3, EXCEPT AS ALLOWED PER THE EXEMPTIONS LISTED IN BUILDING CODE SECTION 1705.3.
      b. PERIODIC INSPECTION OF REINFORCING STEEL AND PRESTRESSING TENDON MATERIAL AND PLACEMENT.
      c. PERIODIC INSPECTION OF REINFORCING STEEL WELDING, INCLUDING BAR MATERIAL AND WELDS AS REQUIRED.
      d. PERIODIC INSPECTION OF ANCHORS CAST IN FRESH CONCRETE.
      e. INSPECTION OF ANCHORS POST-INSTALLED IN HARDENED CONCRETE PER ACI 318, SECTION 17.8.
      f. PERIODIC VERIFICATION OF USE OF REQUIRED DESIGN MIX.
      g. FABRICATE SPECIMENS FOR STRENGTH TESTS, PERFORM SLUMP AND AIR CONTENT TESTS, AND DETERMINE TEMPERATURE OF THE FRESH CONCRETE PRIOR TO CONCRETE PLACEMENT.
      h. CONTINUOUS INSPECTION OF CONCRETE AND SHOTCRETE PLACEMENT FOR PROPER APPLICATION TECHNIQUES.
      i. PERIODIC VERIFICATION OF MAINTENANCE OF SPECIFIED CURING TEMPERATURE AND TECHNIQUES.
      j. INSPECT PRESTRESSED CONCRETE FOR APPLICATION OF PRESTRESSING FORCES AND GROUTING OF BONDED PRESTRESSING TENDONS.
      k. PERIODIC INSPECTION OF ERECTION OF PRECAST CONCRETE MEMBERS.
      l. VERIFY IN-SITU CONCRETE STRENGTH:
         - PRIOR TO STRESSING OF TENDONS IN POST-TENSIONED CONCRETE, AND
         - PRIOR TO REMOVAL OF SHORES AND FORMS FROM BEAMS AND STRUCTURAL SLABS.
      m. PERIODIC INSPECTION OF FORMWORK FOR SHAPE, LOCATION, AND DIMENSIONS OF THE CONCRETE MEMBER BEING FORMED.
   C. MASONRY CONSTRUCTION:
      a. SPECIAL INSPECTIONS AND TESTS OF MASONRY CONSTRUCTION, INCLUDING VERTICAL MASONRY FOUNDATION ELEMENTS, SHALL BE PERFORMED IN ACCORDANCE WITH THE QUALITY ASSURANCE PROGRAM REQUIREMENTS OF TMS 402 AND TMS 602, LATEST EDITIONS, EXCEPT AS SPECIFICALLY EXEMPTED BY BUILDING CODE SECTION 1705.4
   D. SOILS:
      a. SPECIAL INSPECTIONS AND TESTS OF EXISTING SITE SOIL CONDITIONS, FILL PLACEMENT, AND LOAD-BEARING REQUIREMENTS SHALL BE PERFORMED IN ACCORDANCE WITH BUILDING CODE SECTION 1705.6 AND TABLE 1705.6, INCLUDING:
         - PERIODIC VERIFICATION THAT MATERIALS BELOW SHALLOW FOUNDATIONS ARE ADEQUATE TO ACHIEVE THE DESIGN BEARING CAPACITY.
         - PERIODIC VERIFICATION THAT EXCAVATIONS ARE EXTENDED TO PROPER DEPTH AND HAVE REACHED PROPER BEARING MATERIAL.
         - PERIODIC CLASSIFICATION AND TESTING OF COMPACTED FILL MATERIALS.
         - CONTINUOUS VERIFICATION OF USE OF PROPER FILL MATERIALS, FILL MATERIAL DENSITIES, AND LIFT THICKNESSES DURING PLACEMENT AND COMPACTION OF COMPACTED FILL.
         - PERIODIC INSPECTION OF SUBGRADE PREPARATION PRIOR TO PLACEMENT OF COMPACTED FILL.
   E. MAIN WIND-FORCE RESISTING SYSTEM: [>> ENGR NOTE: THIS DOES NOT ALWAYS APPLY, SEE BC SECTION 1705.11 FOR APPLICABILITY <<]
      a. ELEMENTS OF THE MAIN WIND-FORCE RESISTING SYSTEM SHALL BE INSPECTED IN ACCORDANCE WITH BUILDING CODE SECTION 1705.11
   F. MAIN SEISMIC-FORCE RESISTING SYSTEM: [>> ENGR NOTE: THIS DOES NOT ALWAYS APPLY, SEE BC SECTIONS 1705.12 AND 1705.13 FOR APPLICABILITY <<]
      a. ELEMENTS OF THE MAIN SEISMIC-FORCE RESISTING SYSTEM SHALL BE INSPECTED IN ACCORDANCE WITH BUILDING CODE SECTIONS 1705.12 AND 1705.13.
   G. SPECIAL INSPECTIONS SHALL BE PROVIDED FOR ANY OTHER ELEMENTS NOT LISTED AS ABOVE AS DEEMED NECESSARY BY THE BUILDING OFFICIAL.

SPECIAL INSPECTION REQUIREMENTS

REQ'D?	INSPECTION OR TEST	CODE REFERENCE SECTION	REFERENCE STANDARDS
X	STEEL - MATERIAL TEST REPORTS & CERTS.	1705.2	AISC 360
X	STEEL - WELDED CONNECTIONS	1705.2	AISC 360, AWS D1.1
X	STEEL - BOLTED CONNECTIONS	1705.2	AISC 360
	STEEL - GALVANIZED MAIN MEMBERS	1705.2	AISC 360
X	STEEL - DETAILS	1705.2	AISC 360
X	STEEL - ANCHOR RODS & EMBEDMENTS	1705.2	AISC 360, ACI 318
X	COLD-FORMED STEEL DECK	1705.2	SDI
X	OPEN-WEB STEEL JOISTS & JOIST GIRDERS	1705.2; TABLE 1705.2.3	SJI
	COLD-FORMED STEEL TRUSSES	1705.2	-
X	CONCRETE CONSTRUCTION	1705.3; TABLE 1705.3	ACI 318, AWS D1.4
X	MASONRY CONSTRUCTION: TYPE A	1705.4	TMS 402, TMS 602
X	MASONRY CONSTRUCTION: TYPE B	1705.4	TMS 402, TMS 602
X	MASONRY CONSTRUCTION: TYPE C	1705.4	TMS 402, TMS 602
	WOOD - HIGH LOAD DIAPHRAGMS	1705.5	-
	METAL-PLATE CONNECTED WOOD TRUSSES	1705.5	-
X	SOIL TESTING & INSPECTION	1705.6; TABLE 1705.6	-
	DRIVEN DEEP FOUNDATIONS	1705.7; TABLE 1705.7	-
	CAST-IN-PLACE DEEP FOUNDATIONS	1705.8; TABLE 1705.8	-
	HELICAL PILE FOUNDATIONS	1705.9	-
	WIND RESISTANCE - WOOD CONSTRUCTION	1705.11	-
	WIND RESISTANCE - CFS CONSTRUCTION	1705.11	-
	WIND RESISTANCE - COMPONENTS	1705.11	-
	SEISMIC RESISTANCE - STRUCTURAL STEEL	1705.12; 1705.13	AISC 341
	SEISMIC RESISTANCE - WOOD CONSTRUCTION	1705.12	-
	SEISMIC RESISTANCE - CFS CONSTRUCTION	1705.12	-

NOTE:
1. THE ABOVE TABLE IS INTENDED TO SUMMARIZE THE REQUIRED STRUCTURAL SPECIAL INSPECTIONS AND ALERT THE OWNER AND CONTRACTOR OF THEIR INCLUSION IN THE SCOPE. THE CONTRACTOR IS RESPONSIBLE FOR BEING FAMILIAR WITH THE BUILDING CODE AND COMPLYING WITH ALL OF THE SPECIFIC REQUIREMENTS OF THE SECTIONS LISTED ABOVE. IT IS NOT INTENDED TO BE AN EXHAUSTIVE OR COMPLETE LIST OF REQUIRED SPECIAL INSPECTIONS, THERE MAY BE OTHER, OR MORE SPECIFIC, REQUIREMENTS SHOWN ELSEWHERE ON THE DRAWINGS OR IN THE SPECIFICATIONS THAT ARE REQUIRED BY THE SCOPE OF WORK.
2. THE REFERENCE STANDARD COLUMN ABOVE IS FOR GENERAL USE, THE CONTRACTOR IS RESPONSIBLE FOR BEING IN COMPLIANCE WITH ALL STANDARDS REFERENCED IN THE GOVERNING BUILDING CODE.

H2M architects + engineers

538 Broad Hollow Road, 4th Floor East
Melville, NY 11747
631.756.8000 • www.h2m.com
NY Architecture & Landscape Architecture: No Certificate Required
NY Engineering Certificate of Authorization No.: 0018178

CONSULTANTS:

MARK	DATE	DESCRIPTION

STATE OF NEW YORK · DANIEL J. AIELLO · 100515 · LICENSED PROFESSIONAL ENGINEER

04/30/2027
Exp. Date

DANIEL J. AIELLO, P.E.
NY PROFESSIONAL ENGINEER Lic. No. 100515

"IN ACCORDANCE WITH ARTICLE 145, SECTION 7209 OF THE NYS EDUCATION LAW, ALTERATION OF THIS DOCUMENT EXCEPT BY A LICENSED PROFESSIONAL IS ILLEGAL"

DESIGNED BY:	DRAWN BY:	CHECKED BY:	REVIEWED BY:
JJN	SRK	JJN	DJA

PROJECT No:	DATE:	SCALE:
TRFD 2302	FEBRUARY 2025	AS SHOWN

CLIENT

THIELLS ROSEVILLE FIRE DISTRICT

NEW 26-100 FIRE HEADQUARTERS

THIELLS 26 FD

65 W RAMAPO ROAD
GARNERVILLE, NY 10923

CONTRACT

CONTRACT G

STATUS

FINAL BID DOCUMENT

SHEET TITLE

GENERAL NOTES

DRAWING No.

S 002.00

C:\Users\jnieubauer\Documents\TRFD2302_Central23-S_jnieubauerLCLC5.rvt
2/25/2025 12:04:53 PM

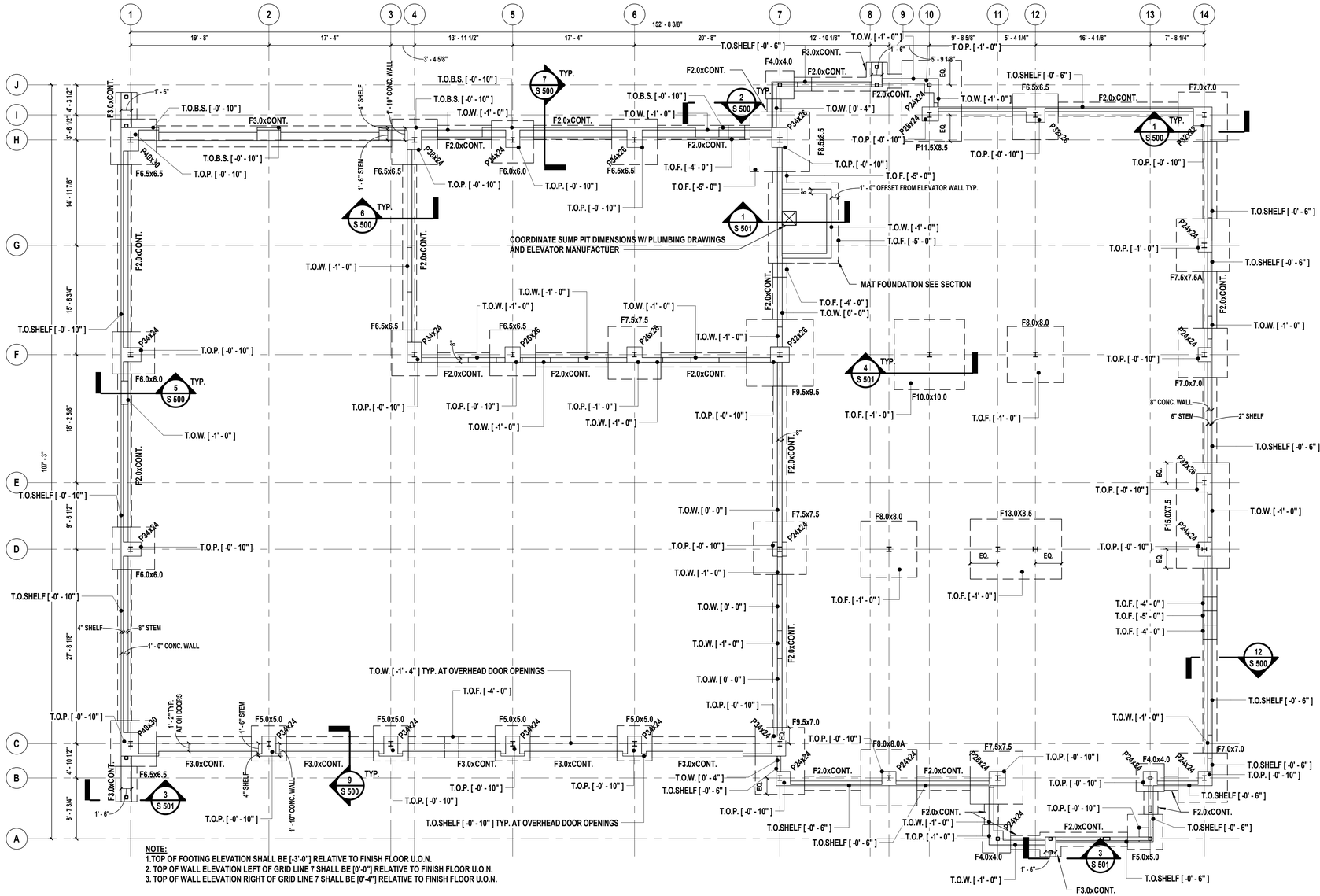

NOTE:
1.TOP OF FOOTING ELEVATION SHALL BE [-3'-0"] RELATIVE TO FINISH FLOOR U.O.N.
2. TOP OF WALL ELEVATION LEFT OF GRID LINE 7 SHALL BE [0'-0"] RELATIVE TO FINISH FLOOR U.O.N.
3. TOP OF WALL ELEVATION RIGHT OF GRID LINE 7 SHALL BE [0'-4"] RELATIVE TO FINISH FLOOR U.O.N.

1 **Foundation Plan**
SCALE: 1/8" = 1'-0"

FOUNDATION PLAN NOTES:

1. ELEVATIONS SHOWN THUS [ ] ARE RELATIVE TO FINISHED FIRST FLOOR ELEVATION [0'-0"].
2. BACKFILLING SHALL NOT COMMENCE AT AREAS ADJACENT TO BASEMENT FOUNDATION WALLS UNTIL THE WALL HAS BEEN PROPERLY LATERALLY BRACED.
3. ALL EXCAVATED EARTH SHALL BE REPLACED WITH CONTROLLED FILL AS PER SPECIFICATIONS.
4. ALL CONCRETE PEDESTALS ARE TO ALIGN WITH WALL CORNERS AND INTERSECTIONS AS SHOWN, UNLESS DIMENSIONED OTHERWISE ON PLAN. CONTRACTOR TO COORDINATE STEEL COLUMN LOCATION WITH PIER LOCATION.
5. CONTRACTOR SHALL COORDINATE SIZE AND LOCATIONS OF ALL REQUIRED PIPING AND CONDUIT PENETRATIONS THROUGH FOUNDATION WALL WITH ALL OTHER CONTRACTS. PROVIDE PIPE SLEEVES AND REINFORCEMENT AROUND PENETRATIONS AS PER DETAILS 5 AND 6 ON SHEET S 501.
6. REFER TO 'A' DWGS FOR WATERPROOFING REQUIREMENTS.
7. COORDINATE LOCATIONS OF REINFORCEMENT DOWELS INTO BUILDING WALLS WITH MASONRY TRADE.
8. THE FOUNDATIONS SHALL BE CAST ON SUITABLE BEARING MATERIAL VERIFIED BY A QUALIFIED GEOTECHNICAL ENGINEER/INSPECTOR. THE GEOTECHNICAL REPORT STATES A 6'-0" LAYER OF UNSUITABLE FILL. THE CONTRACTOR SHALL PROVIDE A UNIT PRICE IN $/CU. YD FOR FILL REMOVAL ON THIS PROJECT ALONG WITH THE BID.
9. SEE SLAB PLAN FOR ADDITIONAL SECONDARY AND STEM WALL CONCRETE POURS

FOOTING SCHEDULE

FOOTING TYPE	SIZE	THICKNESS	REINFORCEMENT	COMMENTS
F2.0xCONT.	2'-0"xCONT.	12"	#5 @ 12" O.C. SHORT & (3) #5 LONG	-
F3.0xCONT.	3'-0"xCONT.	12"	#5 @ 12" O.C. SHORT & (3) #5 LONG	-
F4.0x4.0	4'-0"x4'-0"	12"	(4) #5 BARS T&B	-
F5.0x5.0	5'-0"x5'-0"	12"	(5) #5 BARS T&B	-
F6.0x6.0	6'-0"x6'-0"	12"	(6) #5 BARS T&B	-
F6.5x6.5	6'-6"x6'-6"	12"	(6) #5 BARS T&B	-
F7.0x7.0	7'-0"x7'-0"	12"	(6) #5 BARS T&B	-
F7.5x7.5	7'-6"x7'-6"	15"	(8) #5 BARS B ONLY	-
F7.5x7.5A	7'-6"x7'-6"	15"	(8) #5 BARS T&B	-
F8.0x8.0	8'-0"x8'-0"	15"	(9) #5 BARS T&B	-
F8.0x8.0A	8'-0"x8'-0"	15"	(9) #5 BARS B. (6) #5 BARS T.	-
F8.5x8.5	8'-6"x8'-6"	15"	(9) #5 BARS T&B	-
F9.5x9.5	9'-6"x9'-6"	18"	(12) #5 BARS B ONLY	-
F10.0x10.0	10'-0"x10'-0"	18"	(13) #5 BARS B ONLY	-
F9.5x7.0	9'-6"x7'-0"	15"	(15) #5 BARS SHORT B ONLY (8) #5 T&B LONG	-
F11.5x8.5	11'-6"x8'-6"	15"	(16) #5 BARS SHORT B ONLY (9) #5 T&B LONG	-
F13.5x8.5	13'-6"x8'-6"	15"	(17) #5 BARS SHORT B ONLY (9) #5 T&B LONG	-
F15.0x7.5	15'-0"x7'-6"	15"	(19) #5 BARS SHORT B (10) #5 BARS SHORT T (10) #5 T&B LONG	-
MAT FOUNDATION	SEE PLAN	15"	#5 @ 10" B EACH WAY. #5 @ 12" T EACH WAY	-

PEDESTAL SCHEDULE

PEDESTAL TYPE	SIZE	STIRRUPS	LONG. REINF.	NOTES
P24x24	24" x 24"	#4 @ 10" O.C.	(8) #7	1, 3
P26x26	26" x 26"	#4 @ 10" O.C.	(8) #7	N/A
P32x32	32" x 32"	#4 @ 10" O.C.	(8) #7	2, 5
P28x24	28" x 24"	#3 @ 10" O.C.	(10) #7	1,3
P32x26	32" x 26"	#3 @ 10" O.C.	(22) #7	1,5
P34x24	34" x 24"	#4 @ 10" O.C.	(24) #7	1,3
P34x26	34" x 26"	#4 @ 10" O.C.	(28) #7	1,4
P38x24	38" x 24"	#3 @ 10" O.C.	(34) #7	1,4
P40x30	40" x 30"	#3 @ 10" O.C.	(34) #7	N/A

NOTES:
1. PROVIDE ADDITIONAL TENSION REINFORCEMENT: (4) #7 VERTICAL BARS
2. PROVIDE ADDITIONAL TENSION REINFORCEMENT: (6) #7 VERTICAL BARS
3. PROVIDE ADDITIONAL SHEAR REINFORCEMENT: (4) #4 STIRRUPS @ 3" O.C. TOP
4. PROVIDE ADDITIONAL SHEAR REINFORCEMENT: (6) #4 STIRRUPS @ 3" O.C. TOP
5. PROVIDE ADDITIONAL SHEAR REINFORCEMENT: (8) #4 STIRRUPS @ 3" O.C. TOP

H2M architects + engineers
538 Broad Hollow Road, 4th Floor East
Melville, NY 11747
631.756.8000 • www.h2m.com
NY Architecture & Landscape Architecture: No Certificate Required
NY Engineering Certificate of Authorization No.: 0018178

CONSULTANTS:

MARK	DATE	DESCRIPTION

STATE OF NEW YORK · DANIEL J. AIELLO · 100515 · LICENSED PROFESSIONAL ENGINEER

04/30/2027
Exp. Date

DANIEL J. AIELLO, P.E.
NY PROFESSIONAL ENGINEER Lic. No. 100515

"IN ACCORDANCE WITH ARTICLE 145, SECTION 7209 OF THE NYS EDUCATION LAW, ALTERATION OF THIS DOCUMENT EXCEPT BY A LICENSED PROFESSIONAL IS ILLEGAL"

DESIGNED BY:	DRAWN BY:	CHECKED BY:	REVIEWED BY:
JJN	SRK	JJN	DJA

PROJECT No:	DATE:	SCALE:
TRFD 2302	FEBRUARY 2025	AS SHOWN

CLIENT
THIELLS ROSEVILLE FIRE DISTRICT

NEW 26-100 FIRE HEADQUARTERS

THIELLS 26 FD

65 W RAMAPO ROAD GARNERVILLE, NY 10923

CONTRACT
CONTRACT G GENERAL CONSTRUCTION

STATUS
FINAL BID DOCUMENT

SHEET TITLE
FOUNDATION PLAN

DRAWING No.
S 100.00

C:\Users\jneubauer\Documents\TRFD2302_Central23-S_jneubauerLCLC5.rvt

2/25/2025 12:04:54 PM

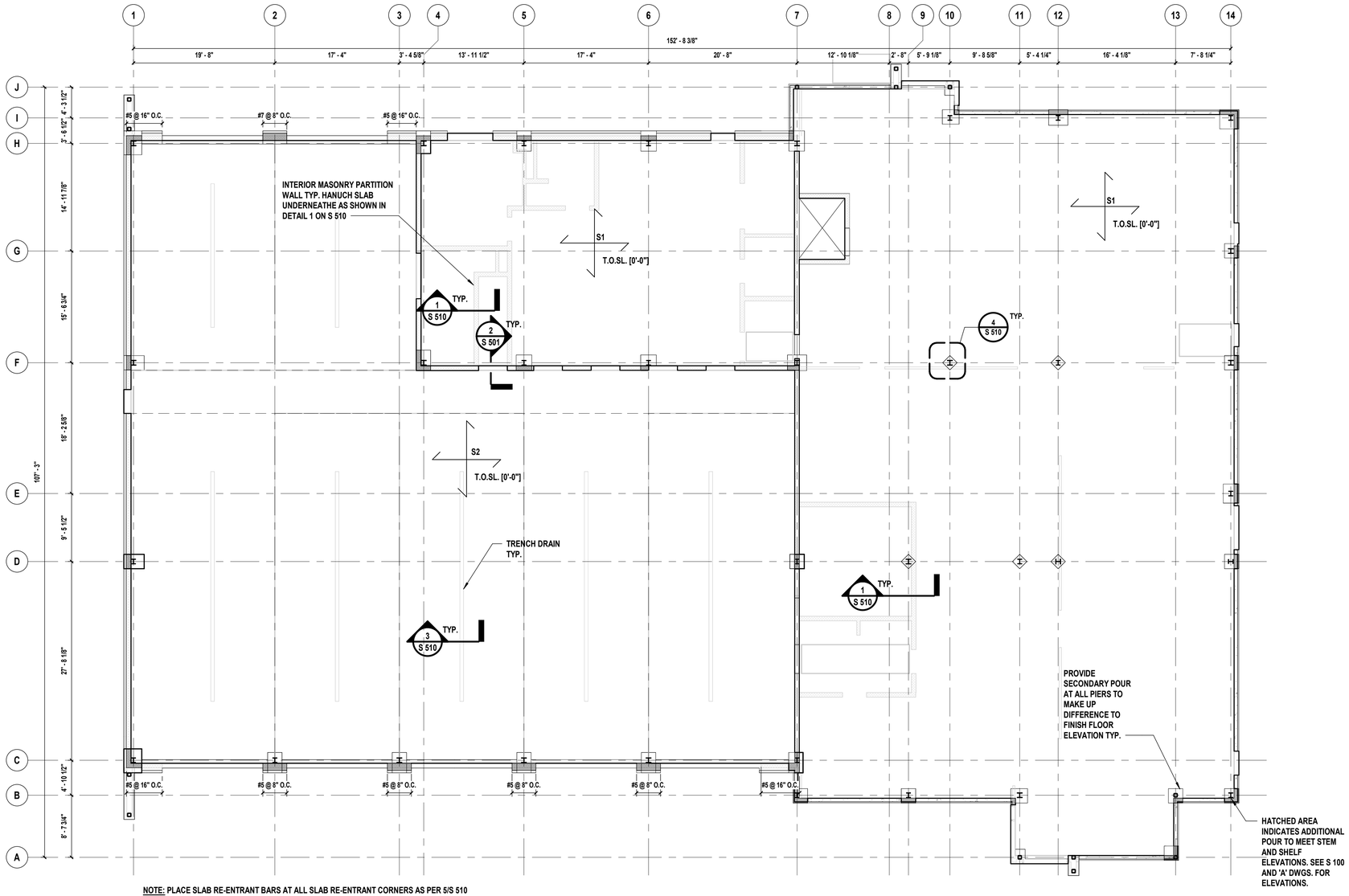

NOTE: PLACE SLAB RE-ENTRANT BARS AT ALL SLAB RE-ENTRANT CORNERS AS PER 5/S 510

1 **Slab Plan**
SCALE: 1/8" = 1'-0"

MASONRY NOTES:

1. ELEVATIONS SHALL BE ESTABLISHED RELATIVE TO FINISHED FIRST FLOOR ELEVATION [0'-0"].

1.1 INDICATES CMU WALL (SEE 'A' DWGS FOR SIZE) REINFORCED VERTICALLY WITH #5 BARS SPACED AT A MAXIMUM SPACING OF 32" O.C., TYPICAL, UNLESS OTHERWISE NOTED.

2. FILL ALL MASONRY CELLS CONTAINING REINFORCEMENT SOLID WITH GROUT, TYPICAL.
3. AT EACH SIDE OF MASONRY OPENINGS, FILL TWO CELLS WITH GROUT AND (1) #5 MIN. PER CELL VERTICALLY UNLESS NOTED OTHERWISE. AT CORNERS OF MASONRY WALLS, CORNER CELL AND ONE ADJACENT CELL TO EACH SIDE OF CORNER (3 TOTAL) ARE TO BE FILLED WITH GROUT AND (1) #5 MIN. PER CELL FROM FOOTING INTO UPPERMOST BOND BEAM UNLESS NOTED OTHERWISE. FOR WALLS WITH LARGER REBAR INDICATED IN SCHEDULE USE THE LARGER REBAR.
4. REFER TO 'A' DWGS. AND SPECIFICATIONS FOR ADDITIONAL REQUIREMENTS NOT OUTLINED HERE.
5. ALL VERTICAL REINFORCEMENT INTERRUPTED BY STRUCTURAL STEEL SHALL BE WELDED TO TOP OF STEEL MEMBERS, TYPICAL.
6. COORDINATE PLACEMENT OF VERTICAL WALL DOWELS EMBEDDED INTO FOUNDATION WALLS AND FLOOR SLABS WITH CELLS OF MASONRY WALL. DOWEL SPACING TO MATCH SPACING OF VERTICAL REINFORCEMENT IN WALLS, TYPICAL.
7. REFER TO 'A' DWGS. FOR LOCATIONS AND BRACING REQUIREMENTS OF INTERIOR MASONRY WALLS.
8. ALL INTERIOR STRUCTURAL MASONRY WALLS SHALL BE REINFORCED VERTICALLY WITH #5 @ 48" O.C., CENTERED IN FULLY GROUTED CELL, TYPICAL U.O.N.
9. PROVIDE LADDER TYPE HORIZONTAL JOINT REINFORCING IN ALL WALLS AT 16" O.C. , MAXIMUM, U.O.N.
10. BOND BEAMS REINFORCED WITH (1) #5 BAR, CONTINUOUS, SHALL BE PLACED AT EACH FLOOR LEVEL AND AT TOP OF WALL, U.O.N.

NOTES:

1. ELEVATIONS SHOWN THUS [ ] ARE RELATIVE TO FINISHED FIRST FLOOR ELEVATION [0'-0"].
2. S1 INDICATES 6" CONCRETE SLAB ON GRADE REINFORCED WITH 6x6 - W2.9xW2.9 W.W.F.
3. S2 INDICATES SPAN OF 8" CONCRETE SLAB ON GRADE, REINFORCED WITH 6x6 - W4.0XW4.0 W.W.F. TOP & BOTTOM, MAINTAIN THICKNESS THROUGH PITCHED AREAS
4. PROVIDE 1/2" PRE-MOLDED EXPANSION JOINT AROUND PERIMETER OF CONCRETE SLAB ON METAL DECK AND SLAB ON GRADE WHERE IT ABUTS THE FOUNDATION WALL OF THE BUILDING.
5. COORDINATE LOCATIONS OF INTERIOR MASONRY WALLS WITH 'A' DWGS. PROVIDE #5 DOWELS, 1'-4" x 6" LG. @ 48" O.C. TO BE EMBEDDED INTO CONCRETE FLOOR SLAB.

LEGEND:

C.J. = CONTROL JOINT
E.J. = 1/2" PREMOLDED EXPANSION JOINT
E.O.S. = EDGE OF SLAB
T.O.S. = TOP OF SLAB
U.O.N. = UNLESS OTHERWISE NOTED
H.P. = HIGH POINT OF PITCHED SLAB
L.P. = LOW POINT OF PITCHED SLAB
INDICATES PITCH DIRECTION OF SLAB
INDICATES CHANGE IN SLAB ELEVATION

H2M architects + engineers
538 Broad Hollow Road, 4th Floor East
Melville, NY 11747
631.756.8000 • www.h2m.com
NY Architecture & Landscape Architecture: No Certificate Required
NY Engineering Certificate of Authorization No.: 0018178

CONSULTANTS:

MARK	DATE	DESCRIPTION

STATE OF NEW YORK · DANIEL J. AIELLO · 100515 · LICENSED PROFESSIONAL ENGINEER

04/30/2027
Exp. Date

DANIEL J. AIELLO, P.E.
NY PROFESSIONAL ENGINEER Lic. No. 100515

"IN ACCORDANCE WITH ARTICLE 145, SECTION 7209 OF THE NYS EDUCATION LAW, ALTERATION OF THIS DOCUMENT EXCEPT BY A LICENSED PROFESSIONAL IS ILLEGAL"

DESIGNED BY:	DRAWN BY:	CHECKED BY:	REVIEWED BY:
JJN	SRK	JJN	DJA
PROJECT No: TRFD 2302	DATE: FEBRUARY 2025	SCALE: AS SHOWN	

CLIENT

THIELLS ROSEVILLE FIRE DISTRICT

NEW 26-100 FIRE HEADQUARTERS

THIELLS 26 FD

65 W RAMAPO ROAD GARNERVILLE, NY 10923

CONTRACT

CONTRACT G GENERAL CONSTRUCTION

STATUS

FINAL BID DOCUMENT

SHEET TITLE

SLAB PLAN

DRAWING No.

S 110.00

C:\Users\jneubauer\Documents\TRFD2302_Central23-S_jneubauerLCLC5.rvt
2/25/2025 12:04:55 PM

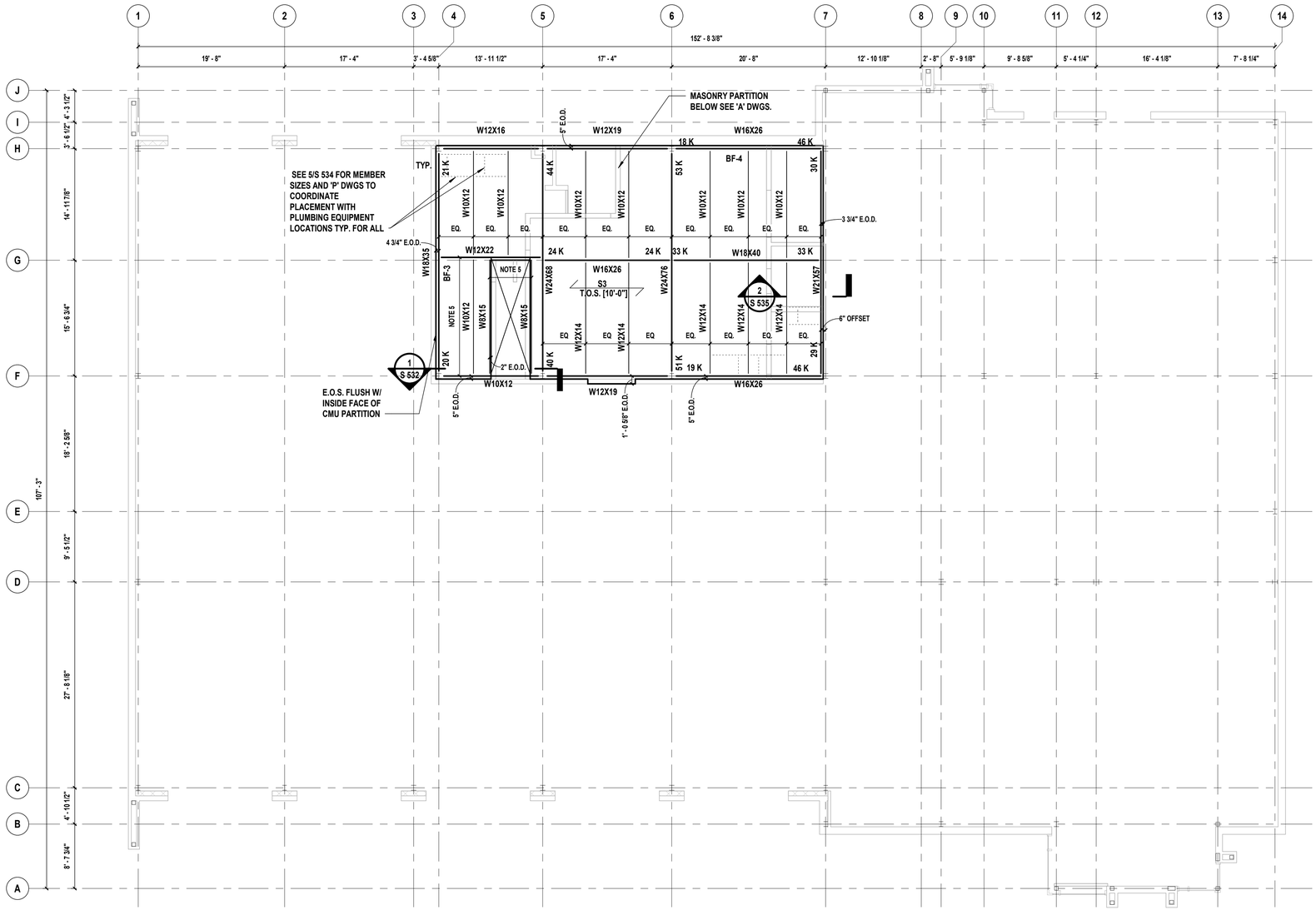

1 **Mezzanine Framing Plan**
SCALE: 1/8" = 1'-0"

NOTES:

1. TOP OF STEEL SHALL BE SET AT [9'-8"] FROM TOP OF SLAB ELEVATION SEE PLAN FOR SLAB ELEVATION.
2. S3 INDICATES SPAN OF 1.5C-36 18GA. NON-COMPOSITE METAL DECK BY VULCRAFT OR APPROVED EQUAL, WITH 2 1/2" OF 4000PSI CONCRETE (4" THK. TOTAL) REINFORCED W/ 6X6 W2.9xW2.9 WELDED WIRE FABRIC & #4 @ 12" O.C. PARALLEL WITH SPAN OF DECK
3. SEE A DWGS. FOR EDGE OF SLAB DIMENSIONS.
4. STEEL CONNECTION PIECE DETAILS SHALL BE SUBMITTED WITH CALCULATIONS SIGNED AND SEALED BY A NEW YORK STATE LICENSED PROFESSIONAL ENGINEER. CONNECTION DESIGNER SHALL DESIGN ALL MOMENT CONNECTIONS AND SIMPLE SHEAR CONNECTIONS. WHERE DESIGN SHEAR REACTION IS NOT LISTED ON DRAWINGS, IT SHALL BE TAKEN AS 15 KIPS LRFD. WHERE AXIAL FORCE IN BEAMS IS NOT LISTED IN DRAWINGS, IT SHALL BE TAKEN AS 15 KIPS LRFD. ALL CONNECTIONS SHALL BE DESIGNED CONSIDERING AXIAL, SHEAR AND MOMENT FORCES SIMULTANEOUSLY AS REQUIRED BY BUILDING CODE. SEE STRUCTURAL STEEL SPECIFICATIONS FOR ADDITIONAL DESIGN LOADING REQUIREMENTS.
5. COORDINATE DIMENSIONS OF STAIR LANDING FRAMING WITH STAIR MANUFACTURER. SEE 'A' DWGS. FOR ADDITIONAL INFORMATION.
6. DECK IS DESIGNED AS THREE-SPAN DECK.

LEGEND:

= HANGER BELOW

= CARRIED COLUMN/HANGER ABOVE

E.O.S. = EDGE OF SLAB

H2M architects + engineers

538 Broad Hollow Road, 4th Floor East
Melville, NY 11747
631.756.8000 • www.h2m.com
NY Architecture & Landscape Architecture: No Certificate Required
NY Engineering Certificate of Authorization No.: 0018178

CONSULTANTS:

MARK	DATE	DESCRIPTION

STATE OF NEW YORK · DANIEL J. AIELLO · 100515 · LICENSED PROFESSIONAL ENGINEER

04/30/2027
Exp. Date

DANIEL J. AIELLO, P.E.
NY PROFESSIONAL ENGINEER Lic. No. 100515

"IN ACCORDANCE WITH ARTICLE 145, SECTION 7209 OF THE NYS EDUCATION LAW, ALTERATION OF THIS DOCUMENT EXCEPT BY A LICENSED PROFESSIONAL IS ILLEGAL"

DESIGNED BY:	DRAWN BY:	CHECKED BY:	REVIEWED BY:
JJN	SRK	JJN	DJA

PROJECT No:	DATE:	SCALE:
TRFD 2302	FEBRUARY 2025	AS SHOWN

CLIENT

THIELLS ROSEVILLE FIRE DISTRICT

NEW 26-100 FIRE HEADQUARTERS

65 W RAMAPO ROAD GARNERVILLE, NY 10923

CONTRACT

CONTRACT G GENERAL CONSTRUCTION

STATUS

FINAL BID DOCUMENT

SHEET TITLE

STORAGE MEZZANINE FRAMING PLAN

DRAWING No.

S 120.00

C:\Users\jneubauer\Documents\TRFD2302_Central23-S_jneubauerLCLC5.rvt

2/25/2025 12:04:55 PM

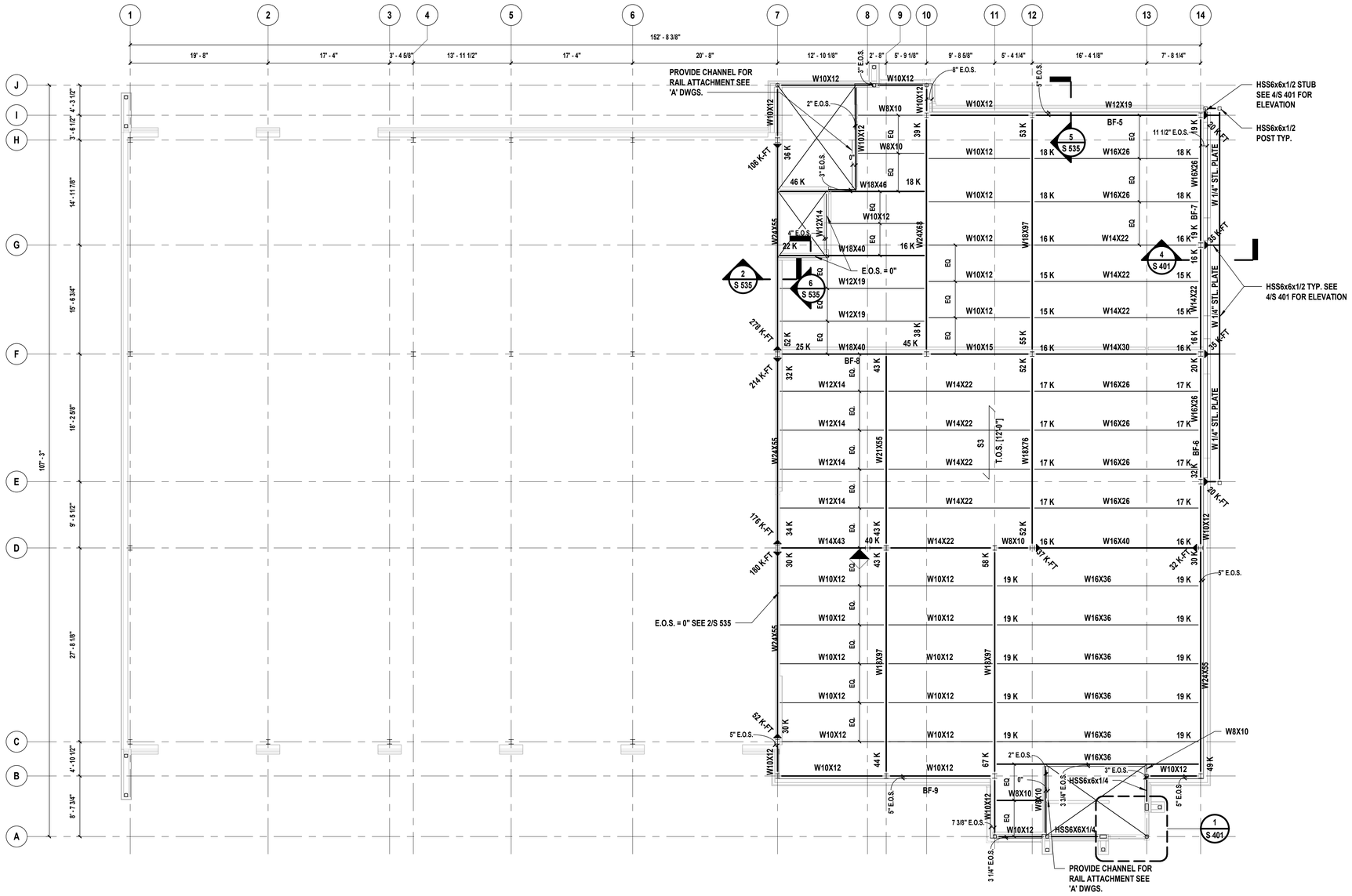

1 Second Floor Framing Plan

SCALE: 1/8" = 1'-0"

NOTES:

1. TOP OF STEEL SHALL BE SET AT [11'-8]" FROM TOP OF SLAB ELEVATION SEE PLAN FOR SLAB ELEVATION.
2. S3 — INDICATES SPAN OF 1.5C-36 18GA. NON-COMPOSITE METAL DECK BY VULCRAFT OR APPROVED EQUAL, WITH 2 1/2" OF 4000PSI CONCRETE (4" THK. TOTAL) REINFORCED W/ 6X6 W2.9xW2.9 WELDED WIRE FABRIC & #4 @ 12" O.C. PARALLEL WITH SPAN OF DECK
3. SEE 'A' DWGS. FOR EDGE OF SLAB DIMENSIONS.
4. INDICATES BEAM TO COLUMN MOMENT CONNECTION WITH THE NUMBER REPRESENTING THE L.R.F.D. DESIGN MOMENT IN FT-KIPS.
5. STEEL CONNECTION PIECE DETAILS SHALL BE SUBMITTED WITH CALCULATIONS SIGNED AND SEALED BY A NEW YORK STATE LICENSED PROFESSIONAL ENGINEER. CONNECTION DESIGNER SHALL DESIGN ALL MOMENT CONNECTIONS AND SIMPLE SHEAR CONNECTIONS. WHERE DESIGN SHEAR REACTION IS NOT LISTED ON DRAWINGS, IT SHALL BE TAKEN AS 15 KIPS LRFD. WHERE AXIAL FORCE IN BEAMS IS NOT LISTED IN DRAWINGS, IT SHALL BE TAKEN AS 15 KIPS LRFD. ALL CONNECTIONS SHALL BE DESIGNED CONSIDERING AXIAL, SHEAR AND MOMENT FORCES SIMULTANEOUSLY AS REQUIRED BY BUILDING CODE. SEE STRUCTURAL STEEL SPECIFICATIONS FOR ADDITIONAL DESIGN LOADING REQUIREMENTS.
6. COORDINATE DIMENSIONS OF STAIR LANDING FRAMING WITH STAIR MANUFACTURER. SEE 'A' DWGS. FOR ADDITIONAL INFORMATION.

LEGEND:

= HANGER BELOW

= CARRIED COLUMN/HANGER ABOVE

E.O.S. = EDGE OF SLAB

H2M architects + engineers

538 Broad Hollow Road, 4th Floor East
Melville, NY 11747
631.756.8000 • www.h2m.com
NY Architecture & Landscape Architecture: No Certificate Required
NY Engineering Certificate of Authorization No.: 0018178

CONSULTANTS:

MARK	DATE	DESCRIPTION

STATE OF NEW YORK · DANIEL J. AIELLO · 100515 · LICENSED PROFESSIONAL ENGINEER

04/30/2027 Exp. Date

DANIEL J. AIELLO, P.E.
NY PROFESSIONAL ENGINEER Lic. No. 100515

"IN ACCORDANCE WITH ARTICLE 145, SECTION 7209 OF THE NYS EDUCATION LAW, ALTERATION OF THIS DOCUMENT EXCEPT BY A LICENSED PROFESSIONAL IS ILLEGAL"

DESIGNED BY:	DRAWN BY:	CHECKED BY:	REVIEWED BY:
JJN	SRK	JJN	DJA

PROJECT No:	DATE:	SCALE:
TRFD 2302	FEBRUARY 2025	AS SHOWN

CLIENT

THIELLS ROSEVILLE FIRE DISTRICT

NEW 26-100 FIRE HEADQUARTERS

THIELLS 26 FD

65 W RAMAPO ROAD
GARNERVILLE, NY 10923

CONTRACT

CONTRACT G
GENERAL CONSTRUCTION

STATUS

FINAL BID DOCUMENT

SHEET TITLE

SECOND FLOOR FRAMING PLAN

DRAWING No.

S 121.00

C:\Users\jneubauer\Documents\TRFD2302_Central23-S_jneubauer.LCLC5.rvt

2/25/2025 12:04:56 PM

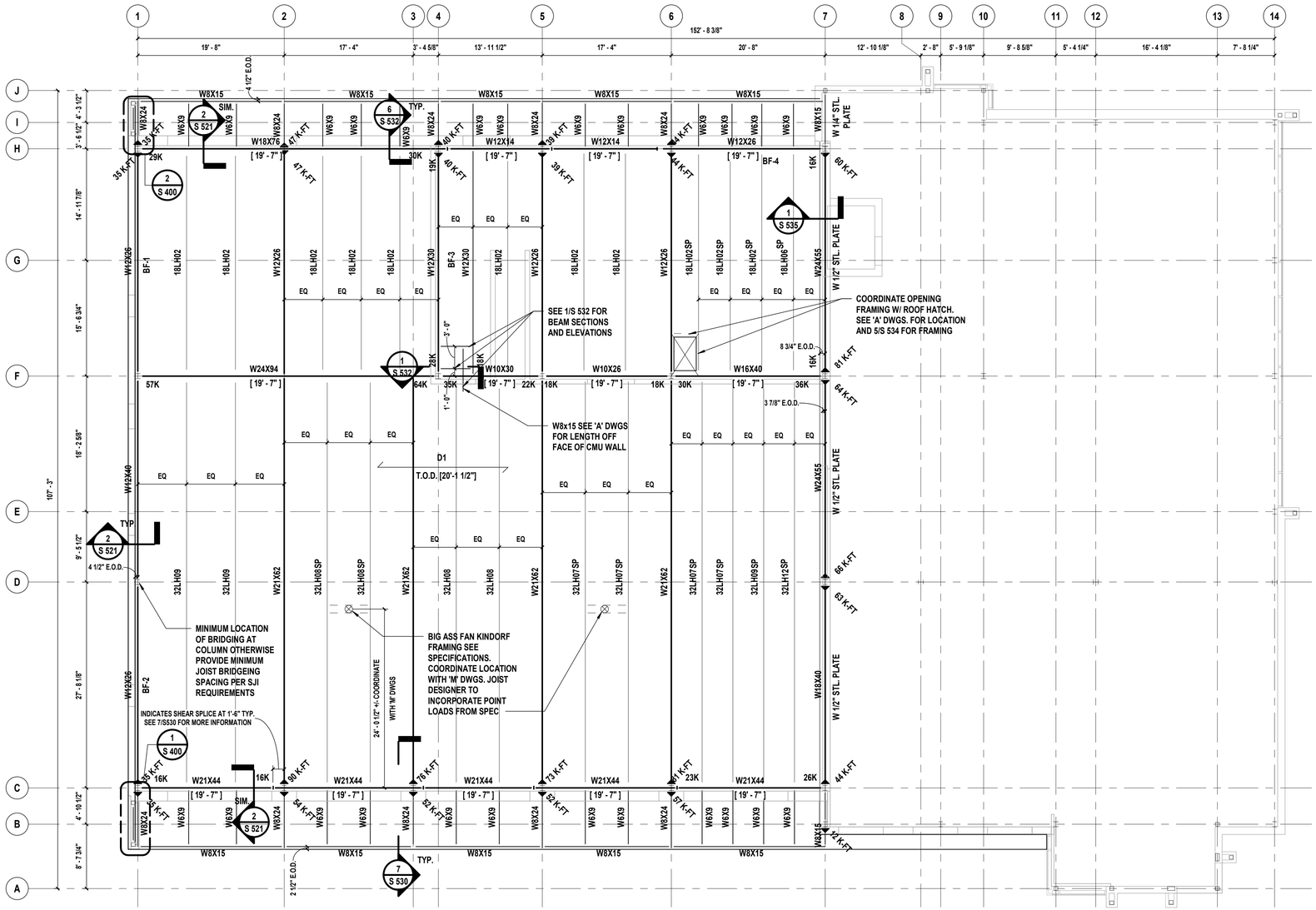

1 Low Roof Framing Plan

SCALE: 1/8" = 1'-0"

NOTES:

1. TOP OF STEEL SHALL BE SET AT -0'-1 1/2" FROM TOP OF DECK SEE PLAN FOR DECK ELEVATION.
2. D1 INDICATES SPAN OF 1.5B-36 19GA. ROOF DECK BY VULCRAFT NUCOR OR APPROVED EQUAL
3. INSTALL BRIDGING FOR BAR JOISTS AS PER S.J.I. REQUIREMENTS.
4. SEE 'A' DWGS. FOR EDGE OF DECK DIMENSIONS.
5. INDICATES BEAM TO COLUMN MOMENT CONNECTION WITH THE NUMBER REPRESENTING THE L.R.F.D. MOMENT CAPACITY IN FT-KIPS.
6. STEEL CONNECTION PIECE DETAILS SHALL BE SUBMITTED WITH CALCULATIONS SIGNED AND SEALED BY A NEW YORK STATE LICENSED PROFESSIONAL ENGINEER. CONNECTION DESIGNER SHALL DESIGN ALL MOMENT CONNECTIONS AND SIMPLE SHEAR CONNECTIONS. WHERE DESIGN SHEAR REACTION IS NOT LISTED ON DRAWINGS, IT SHALL BE TAKEN AS 15 KIPS LRFD. WHERE AXIAL FORCE IN BEAMS IS NOT LISTED IN DRAWINGS, IT SHALL BE TAKEN AS 15 KIPS LRFD. ALL CONNECTIONS SHALL BE DESIGNED CONSIDERING AXIAL, SHEAR AND MOMENT FORCES SIMULTANEOUSLY AS REQUIRED BY BUILDING CODE. SEE STRUCTURAL STEEL SPECIFICATIONS FOR ADDITIONAL DESIGN LOADING REQUIREMENTS.
7. COORDINATE DIMENSIONS OF STAIR LANDING FRAMING WITH STAIR MANUFACTURER. SEE 'A' DWGS. FOR ADDITIONAL INFORMATION.

LEGEND:

= HANGER BELOW

= CARRIED COLUMN/HANGER ABOVE

E.O.S. = EDGE OF SLAB

H2M architects + engineers

538 Broad Hollow Road, 4th Floor East
Melville, NY 11747
631.756.8000 • www.h2m.com
NY Architecture & Landscape Architecture: No Certificate Required
NY Engineering Certificate of Authorization No.: 0018178

CONSULTANTS:

MARK	DATE	DESCRIPTION

STATE OF NEW YORK · DANIEL J. AIELLO · 100515 · LICENSED PROFESSIONAL ENGINEER

04/30/2027 Exp. Date

DANIEL J. AIELLO, P.E.
NY PROFESSIONAL ENGINEER Lic. No. 100515

"IN ACCORDANCE WITH ARTICLE 145, SECTION 7209 OF THE NYS EDUCATION LAW, ALTERATION OF THIS DOCUMENT EXCEPT BY A LICENSED PROFESSIONAL IS ILLEGAL"

DESIGNED BY:	DRAWN BY:	CHECKED BY:	REVIEWED BY:
JJN	SRK	JJN	DJA
PROJECT No: TRFD 2302	DATE: FEBRUARY 2025	SCALE: AS SHOWN	

CLIENT

THIELLS ROSEVILLE FIRE DISTRICT

NEW 26-100 FIRE HEADQUARTERS

65 W RAMAPO ROAD
GARNERVILLE, NY 10923

CONTRACT

CONTRACT G
GENERAL CONSTRUCTION

STATUS

FINAL BID DOCUMENT

SHEET TITLE

LOW ROOF FRAMING PLAN

DRAWING No.

S 130.00

C:\Users\jineubauer\Documents\TRFD2302_Central23-S_jineubauer.CLCS.rvt

2/25/2025 2:46:42 PM

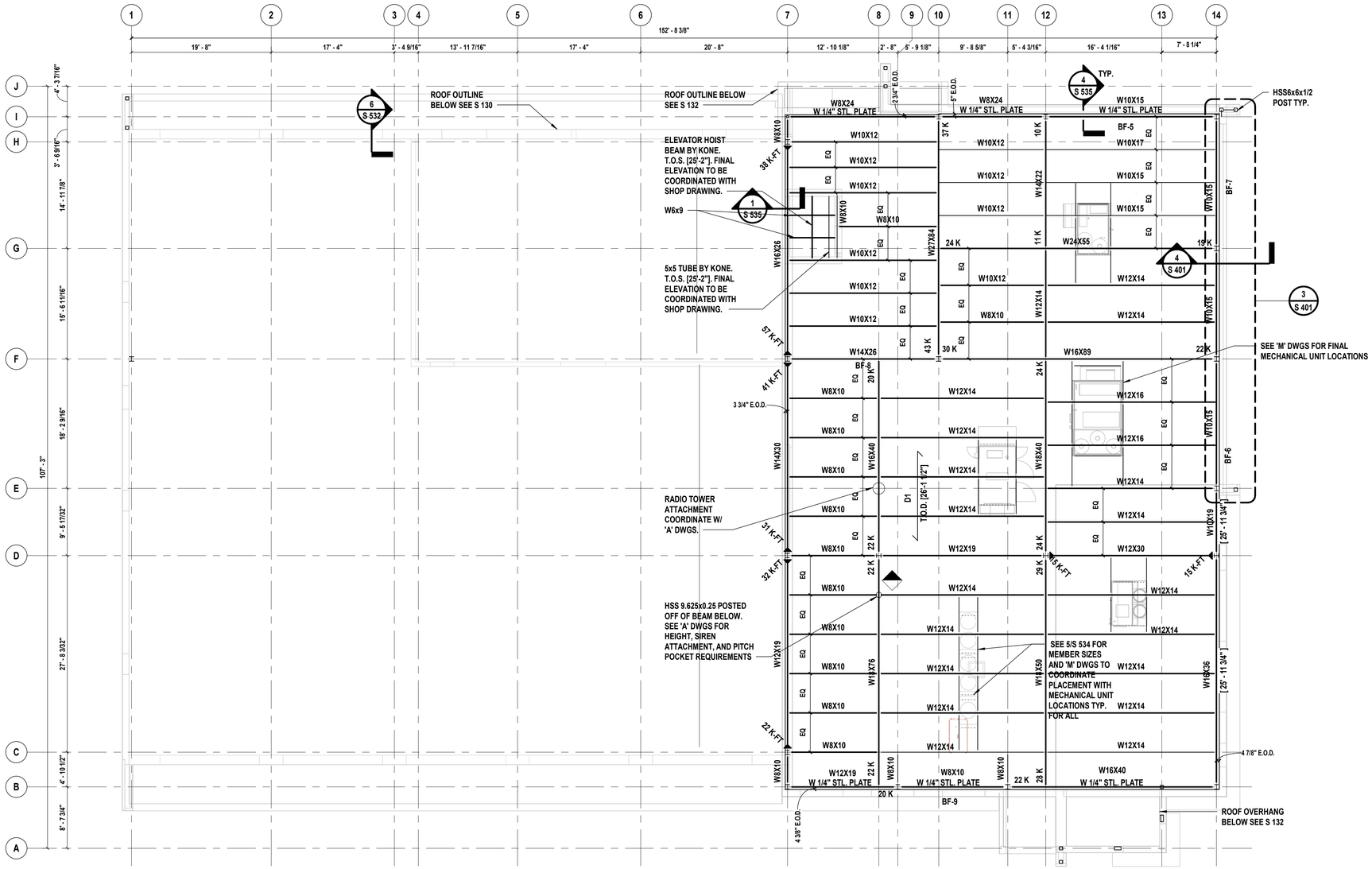

1 **High Roof Framing Plan**
SCALE: 1/8" = 1'-0"

NOTES:

1. TOP OF STEEL SHALL BE SET AT [26'-0"] ABOVE FINISHED FIRST FLOOR ELEVATION UNLESS OTHERWISE NOTED AS THUS [ ].
2. D1 INDICATES SPAN OF 1.5B-36 19GA. ROOF DECK BY VULCRAFT NUCOR OR APPROVED EQUAL
3. INSTALL BRIDGING FOR BAR JOISTS AS PER S.J.I. REQUIREMENTS.
4. SEE 'A' DWGS FOR EDGE OF DECK DIMENSIONS.
5. INDICATES BEAM TO COLUMN MOMENT CONNECTION WITH THE NUMBER REPRESENTING THE L.R.F.D. DESIGN MOMENT IN FT-KIPS.
6. STEEL CONNECTION PIECE DETAILS SHALL BE SUBMITTED WITH CALCULATIONS SIGNED AND SEALED BY A NEW YORK STATE LICENSED PROFESSIONAL ENGINEER. CONNECTION DESIGNER SHALL DESIGN ALL MOMENT CONNECTIONS AND SIMPLE SHEAR CONNECTIONS. WHERE DESIGN SHEAR REACTION IS NOT LISTED ON DRAWINGS, IT SHALL BE TAKEN AS 15 KIPS LRFD. WHERE AXIAL FORCE IN BEAMS IS NOT LISTED IN DRAWINGS, IT SHALL BE TAKEN AS 15 KIPS LRFD. ALL CONNECTIONS SHALL BE DESIGNED CONSIDERING AXIAL, SHEAR AND MOMENT FORCES SIMULTANEOUSLY AS REQUIRED BY BUILDING CODE. SEE STRUCTURAL STEEL SPECIFICATIONS FOR ADDITIONAL DESIGN LOADING REQUIREMENTS.
7. COORDINATE DIMENSIONS OF STAIR LANDING FRAMING WITH STAIR MANUFACTURER. SEE 'A' DWGS. FOR ADDITIONAL INFORMATION.

LEGEND:

= HANGER BELOW

= CARRIED COLUMN/HANGER ABOVE

E.O.S. = EDGE OF SLAB

H2M architects + engineers

538 Broad Hollow Road, 4th Floor East
Melville, NY 11747
631.756.8000 • www.h2m.com
NY Architecture & Landscape Architecture: No Certificate Required
NY Engineering Certificate of Authorization No.: 0018178

CONSULTANTS:

MARK	DATE	DESCRIPTION

STATE OF NEW YORK · DANIEL J. AIELLO · 100515 · LICENSED PROFESSIONAL ENGINEER

04/30/2027
Exp. Date

DANIEL J. AIELLO, P.E.
NY PROFESSIONAL ENGINEER Lic. No. 100515

"IN ACCORDANCE WITH ARTICLE 145, SECTION 7209 OF THE NYS EDUCATION LAW, ALTERATION OF THIS DOCUMENT EXCEPT BY A LICENSED PROFESSIONAL IS ILLEGAL"

DESIGNED BY:	DRAWN BY:	CHECKED BY:	REVIEWED BY:
JJN	SRK	JJN	DJA
PROJECT No: TRFD 2302	DATE: FEBRUARY 2025	SCALE: AS SHOWN	

CLIENT

THIELLS ROSEVILLE FIRE DISTRICT

NEW 26-100 FIRE HEADQUARTERS

THIELLS 26 FD

65 W RAMAPO ROAD
GARNERVILLE, NY 10923

CONTRACT
CONTRACT G
GENERAL CONSTRUCTION

STATUS
FINAL BID DOCUMENT

SHEET TITLE
HIGH ROOF FRAMING PLAN

DRAWING No.
S 131.00

C:\Users\jmeubauer\Documents\TRFD2302_Central23-S_jmeubauer.CLCS.rvt

2/25/2025 12:04:58 PM

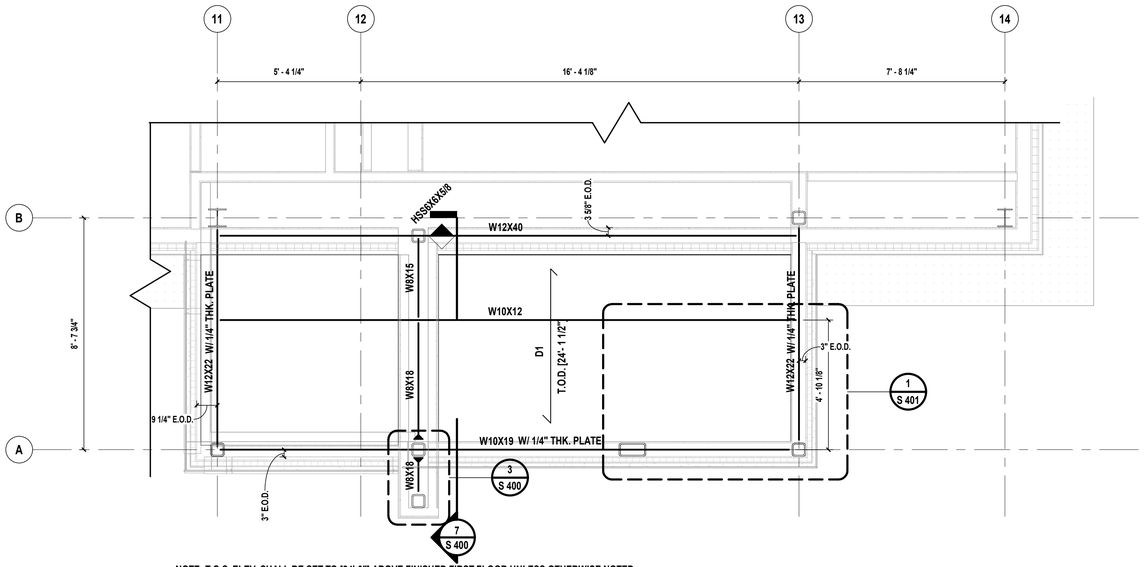

NOTE: T.O.S. ELEV. SHALL BE SET TO [24'-0"] ABOVE FINISHED FIRST FLOOR UNLESS OTHERWISE NOTED.

1 Roof Framing Plan at Stair A

SCALE: 3/8" = 1'-0"

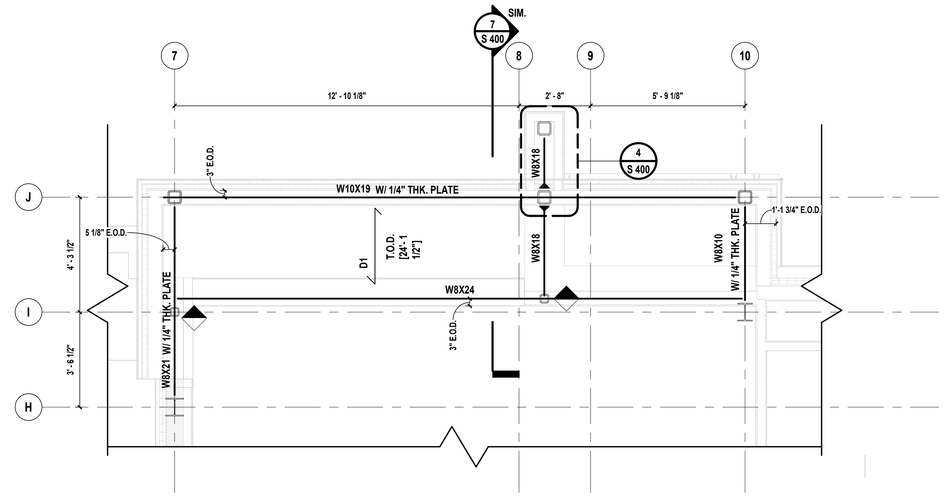

NOTE: T.O.S. ELEV. SHALL BE SET TO [24'-0"] ABOVE FINISHED FIRST FLOOR UNLESS OTHERWISE NOTED.

2 Roof Framing Plan at Stair B

SCALE: 3/8" = 1'-0"

NOTES:

1. SEE NOTES ON PLAN VIEWS FOR T.O.S. ELEVATIONS.
2. D1 INDICATES SPAN OF 1.5B-36 19GA. ROOF DECK BY VULCRAFT NUCOR OR APPROVED EQUAL
3. SEE PLAN FOR EDGE OF DECK DIMENSIONS.
4. INDICATES BEAM TO COLUMN MOMENT CONNECTION WITH THE NUMBER REPRESENTING THE L.R.F.D. DESIGN MOMENT IN FT-KIPS.
5. STEEL CONNECTION PIECE DETAILS SHALL BE SUBMITTED WITH CALCULATIONS SIGNED AND SEALED BY A NEW YORK STATE LICENSED PROFESSIONAL ENGINEER. CONNECTION DESIGNER SHALL DESIGN ALL MOMENT CONNECTIONS AND SIMPLE SHEAR CONNECTIONS. WHERE DESIGN SHEAR REACTION IS NOT LISTED ON DRAWINGS, IT SHALL BE TAKEN AS 15 KIPS LRFD. WHERE AXIAL FORCE IN BEAMS IS NOT LISTED IN DRAWINGS, IT SHALL BE TAKEN AS 15 KIPS LRFD. ALL CONNECTIONS SHALL BE DESIGNED CONSIDERING AXIAL, SHEAR AND MOMENT FORCES SIMULTANEOUSLY AS REQUIRED BY BUILDING CODE. SEE STRUCTURAL STEEL SPECIFICATIONS FOR ADDITIONAL DESIGN LOADING REQUIREMENTS.
6. COORDINATE DIMENSIONS OF STAIR LANDING FRAMING WITH STAIR MANUFACTURER. SEE 'A' DWGS. FOR ADDITIONAL INFORMATION.

LEGEND:

= HANGER BELOW

= CARRIED COLUMN/HANGER ABOVE

E.O.S. = EDGE OF SLAB

C:\Users\jneubauer\Documents\TRFD2302_Central23-S_jneubauerLCLC5.rvt

2/25/2025 12:04:58 PM

H2M architects + engineers

538 Broad Hollow Road, 4th Floor East
Melville, NY 11747
631.756.8000 • www.h2m.com
NY Architecture & Landscape Architecture: No Certificate Required
NY Engineering Certificate of Authorization No.: 0018178

CONSULTANTS:

MARK	DATE	DESCRIPTION

STATE OF NEW YORK · DANIEL J. AIELLO · 100515 · LICENSED PROFESSIONAL ENGINEER

04/30/2027
Exp. Date

DANIEL J. AIELLO, P.E.
NY PROFESSIONAL ENGINEER Lic. No. 100515

"IN ACCORDANCE WITH ARTICLE 145, SECTION 7209 OF THE NYS EDUCATION LAW, ALTERATION OF THIS DOCUMENT EXCEPT BY A LICENSED PROFESSIONAL IS ILLEGAL"

DESIGNED BY:	DRAWN BY:	CHECKED BY:	REVIEWED BY:
JJN	JJN	TZY	DJA

PROJECT No:	DATE:	SCALE:
TRFD 2302	FEBRUARY 2025	AS SHOWN

CLIENT

THIELLS ROSEVILLE FIRE DISTRICT

NEW 26-100 FIRE HEADQUARTERS

THIELLS 26 FD

65 W RAMAPO ROAD
GARNERVILLE, NY 10923

CONTRACT

CONTRACT G

STATUS

FINAL BID DOCUMENT

SHEET TITLE

STAIR ROOF FRAMING PLANS

DRAWING No.

S 132.00

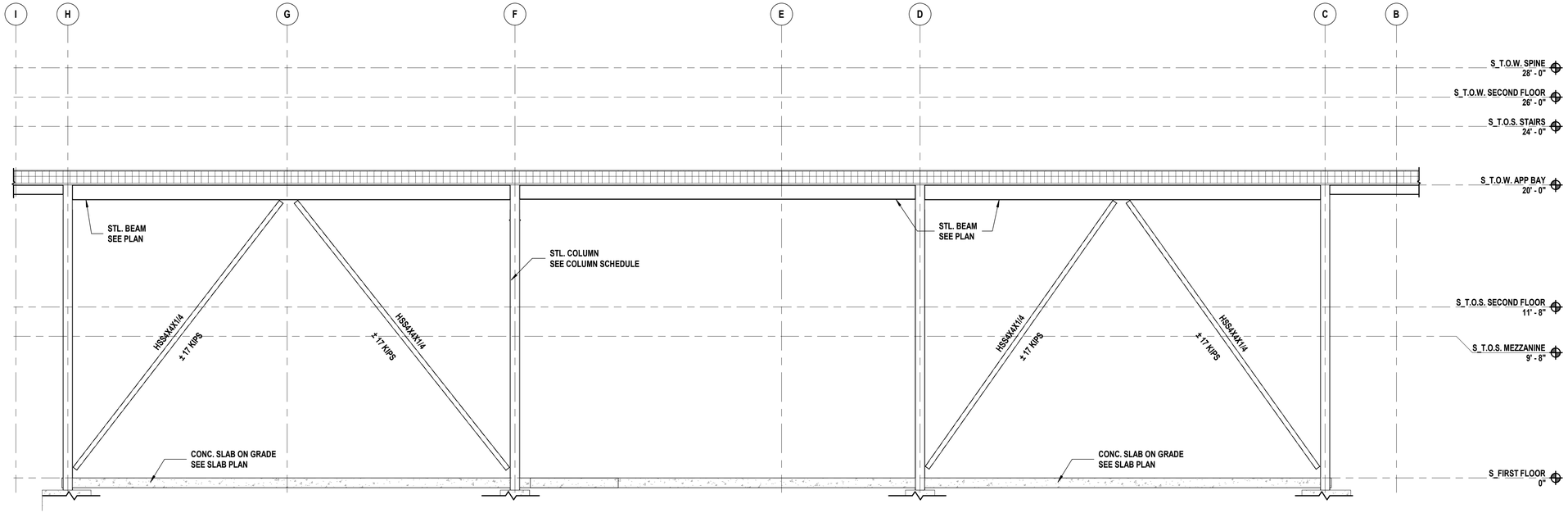

1 BF-1 and BF-2 Elevation

SCALE: NTS

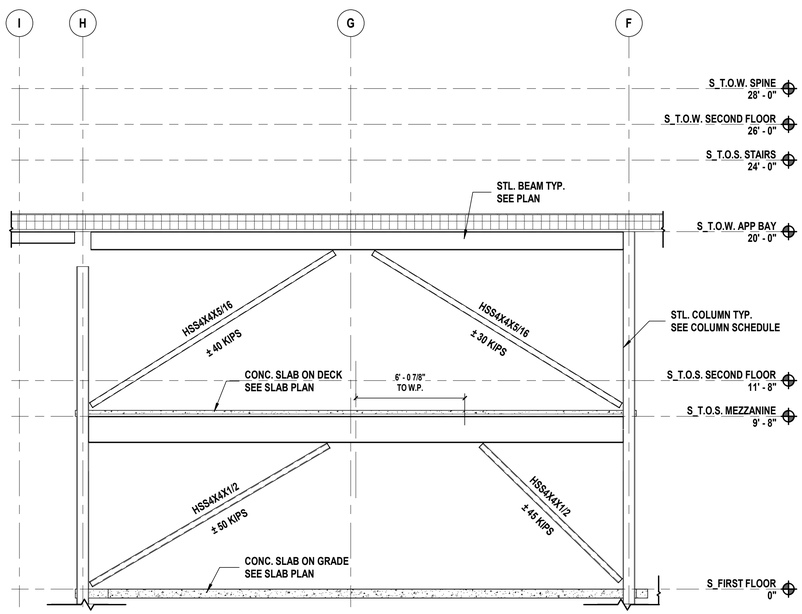

2 BF-3 Elevation

SCALE: NTS

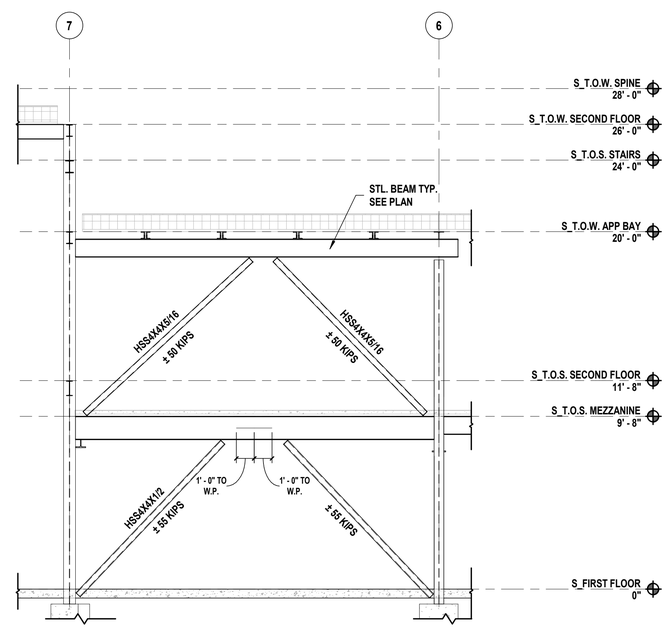

3 BF-4 Elevation

SCALE: NTS

H2M architects + engineers

538 Broad Hollow Road, 4th Floor East
Melville, NY 11747
631.756.8000 • www.h2m.com
NY Architecture & Landscape Architecture: No Certificate Required
NY Engineering Certificate of Authorization No.: 0018178

CONSULTANTS:

MARK	DATE	DESCRIPTION

STATE OF NEW YORK
DANIEL J. AIELLO
100515
LICENSED PROFESSIONAL ENGINEER

04/30/2027
Exp. Date

DANIEL J. AIELLO, P.E.
NY PROFESSIONAL ENGINEER Lic. No. 100515

"IN ACCORDANCE WITH ARTICLE 145, SECTION 7209 OF THE NYS EDUCATION LAW, ALTERATION OF THIS DOCUMENT EXCEPT BY A LICENSED PROFESSIONAL IS ILLEGAL"

DESIGNED BY:	DRAWN BY:	CHECKED BY:	REVIEWED BY:
JJN	SRK	JJN	DJA
PROJECT No: TRFD 2302	DATE: FEBRUARY 2025	SCALE: AS SHOWN	

CLIENT

THIELLS ROSEVILLE FIRE DISTRICT

NEW 26-100 FIRE HEADQUARTERS

65 W RAMAPO ROAD
GARNERVILLE, NY 10923

CONTRACT

CONTRACT G

STATUS

FINAL BID DOCUMENT

SHEET TITLE

BRACED FRAME ELEVATIONS

DRAWING No.

S 300.00

C:\Users\jnieubauer\Documents\TRFD2302_Central23-S_jnieubauerLCLC5.rvt

2/25/2025 12:04:59 PM

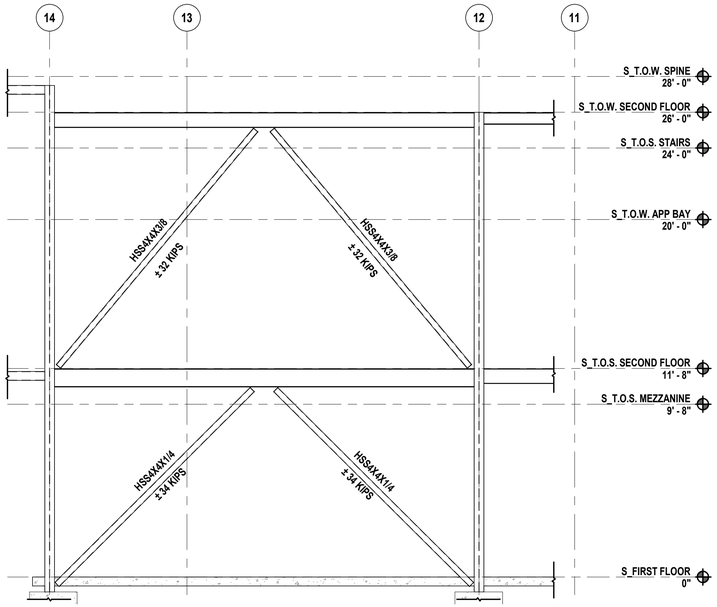

1 **BF-5 Elevation**
SCALE: NTS

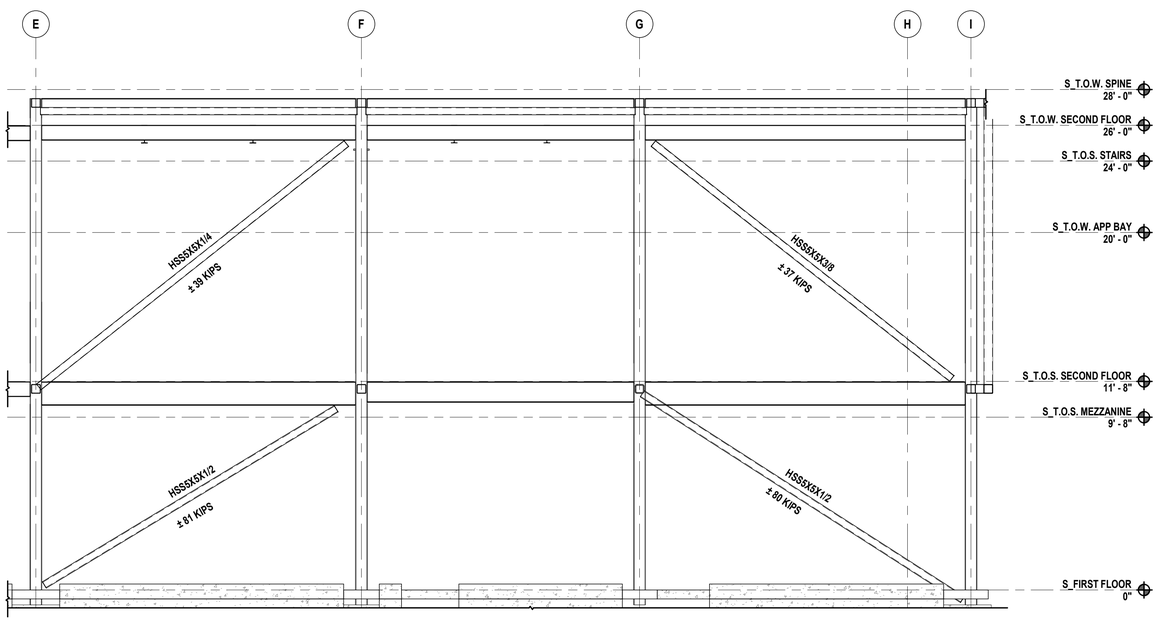

2 **BF-6 and BF-7 Elevation**
SCALE: NTS

C:\Users\jnieubauer\Documents\TRFD2302_Central23-S_jnieubauerLCLC5.rvt

2/25/2025 12:04:59 PM

H 2 M architects + engineers

538 Broad Hollow Road, 4th Floor East
Melville, NY 11747
631.756.8000 • www.h2m.com
NY Architecture & Landscape Architecture: No Certificate Required
NY Engineering Certificate of Authorization No.: 0018178

CONSULTANTS:

MARK	DATE	DESCRIPTION

STATE OF NEW YORK
DANIEL J. AIELLO
100515
LICENSED PROFESSIONAL ENGINEER

04/30/2027
Exp. Date

DANIEL J. AIELLO, P.E.
NY PROFESSIONAL ENGINEER Lic. No. 100515

"IN ACCORDANCE WITH ARTICLE 145, SECTION 7209 OF THE NYS EDUCATION LAW, ALTERATION OF THIS DOCUMENT EXCEPT BY A LICENSED PROFESSIONAL IS ILLEGAL"

DESIGNED BY:	DRAWN BY:	CHECKED BY:	REVIEWED BY:
JJN	SRK	JJN	DJA
PROJECT No: TRFD 2302	DATE: FEBRUARY 2025	SCALE: AS SHOWN	

CLIENT

THIELLS ROSEVILLE FIRE DISTRICT

NEW 26-100 FIRE HEADQUARTERS

THIELLS 26 FD

65 W RAMAPO ROAD
GARNERVILLE, NY 10923

CONTRACT

CONTRACT G

STATUS

FINAL BID DOCUMENT

SHEET TITLE

BRACED FRAME ELEVATIONS

DRAWING No.

S 301.00

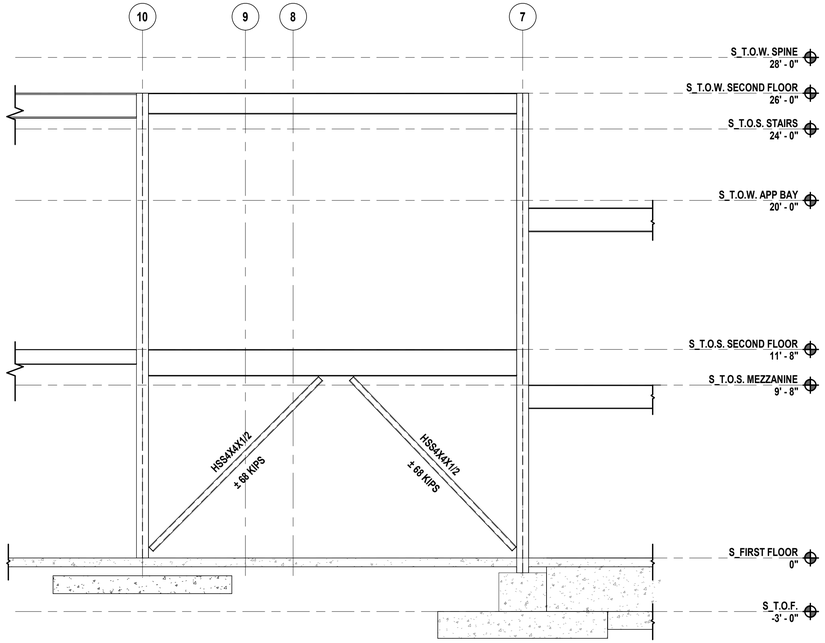

1 BF-8 Elevation

SCALE: NTS

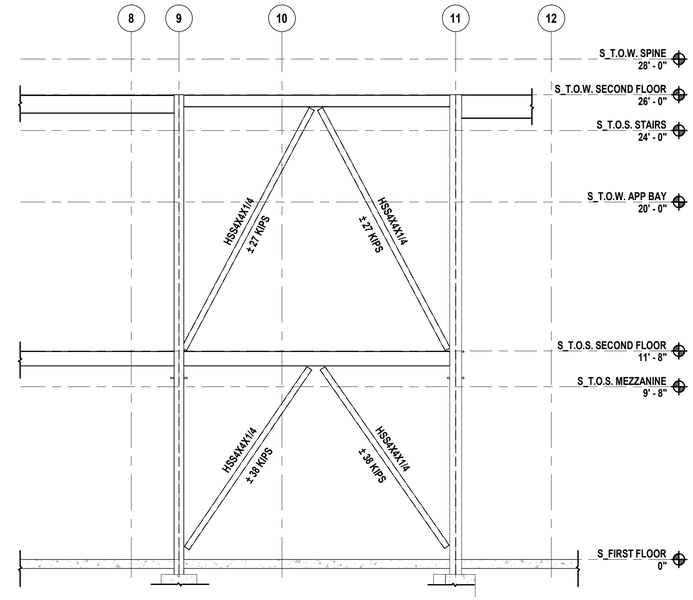

2 BF-9 Elevation

SCALE: NTS

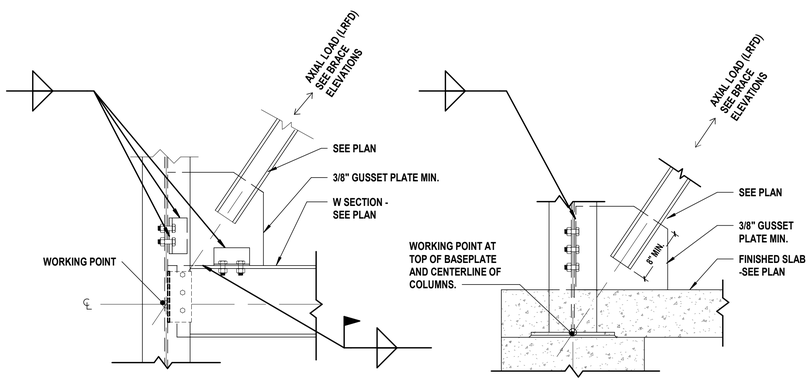

NOTE: CONNECTIONS SHOWN HERE ARE SUGGESTIONS TO THE FABRICATOR. FABRICATOR'S ENGINEER TO DESIGN THESE CONNECTIONS TO THE LOADS PROVIDED ON THE BRACED FRAME ELEVATIONS.

3 Base Bracing Connection

SCALE: 1" = 1'-0"

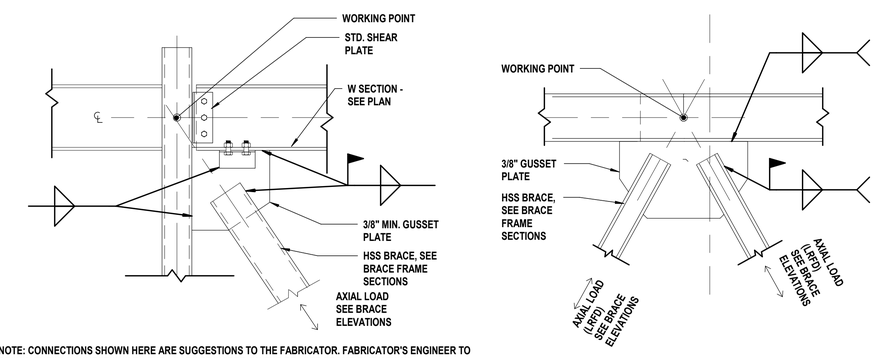

NOTE: CONNECTIONS SHOWN HERE ARE SUGGESTIONS TO THE FABRICATOR. FABRICATOR'S ENGINEER TO DESIGN THESE CONNECTIONS TO THE LOADS PROVIDED ON THE BRACED FRAME ELEVATIONS.

4 Beam Bracing Connection

SCALE: NTS

H 2 M architects + engineers

538 Broad Hollow Road, 4th Floor East
Melville, NY 11747
631.756.8000 • www.h2m.com
NY Architecture & Landscape Architecture: No Certificate Required
NY Engineering Certificate of Authorization No.: 0018178

CONSULTANTS:

MARK	DATE	DESCRIPTION

STATE OF NEW YORK · DANIEL J. AIELLO · 100515 · LICENSED PROFESSIONAL ENGINEER

04/30/2027
Exp. Date

DANIEL J. AIELLO, P.E.
NY PROFESSIONAL ENGINEER Lic. No. 100515

"IN ACCORDANCE WITH ARTICLE 145, SECTION 7209 OF THE NYS EDUCATION LAW, ALTERATION OF THIS DOCUMENT EXCEPT BY A LICENSED PROFESSIONAL IS ILLEGAL"

DESIGNED BY:	DRAWN BY:	CHECKED BY:	REVIEWED BY:
JJN	SRK	JJN	DJA
PROJECT No:	DATE:	SCALE:	
TRFD 2302	FEBRUARY 2025	AS SHOWN	

CLIENT

THIELLS ROSEVILLE FIRE DISTRICT

NEW 26-100 FIRE HEADQUARTERS

THIELLS 26 FD

65 W RAMAPO ROAD
GARNERVILLE, NY 10923

CONTRACT

CONTRACT G

STATUS

FINAL BID DOCUMENT

SHEET TITLE

BRACED FRAME ELEVATIONS

DRAWING No.

S 302.00

C:\Users\jneubauer\Documents\TRFD2302_Central23-S_jneubauerLCLC5.rvt
2/25/2025 12:05:00 PM

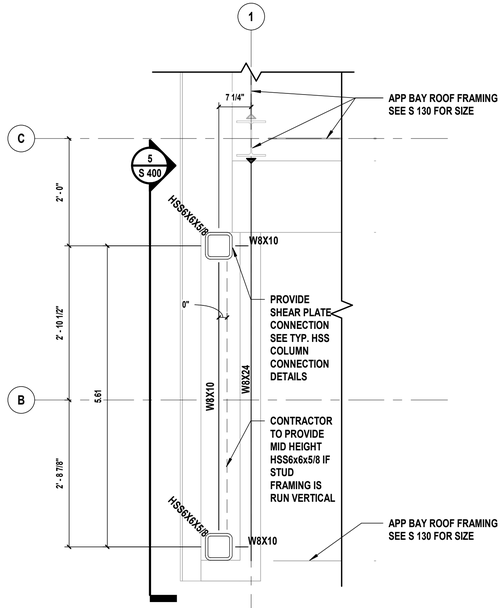

1 **Wall Projection Plan 1**
SCALE: 3/4" = 1'-0"

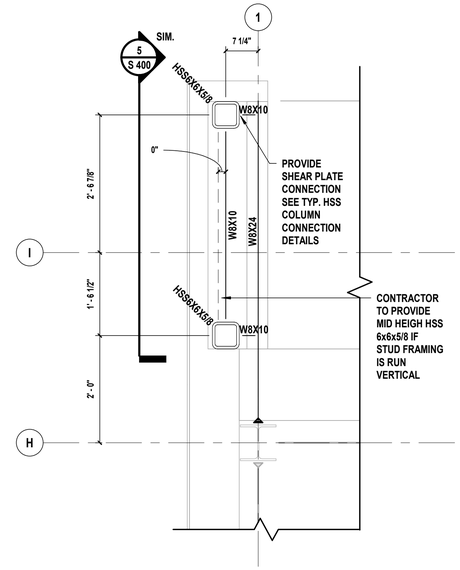

2 **Wall Projection Plan 2**
SCALE: 3/4" = 1'-0"

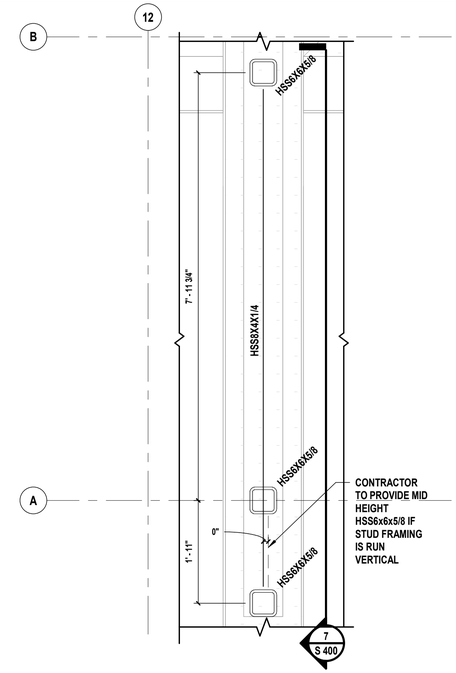

3 **Wall Projection Plan 3**
SCALE: 3/4" = 1'-0"

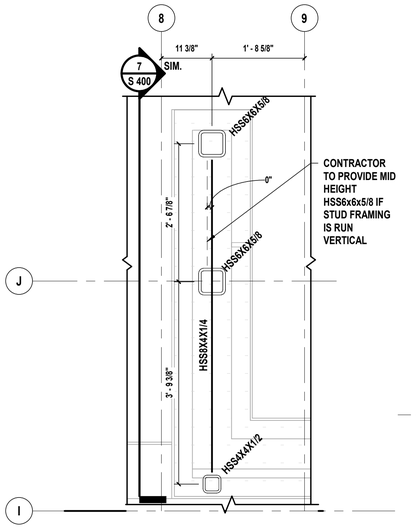

4 **Wall Projection Plan 4**
SCALE: 3/4" = 1'-0"

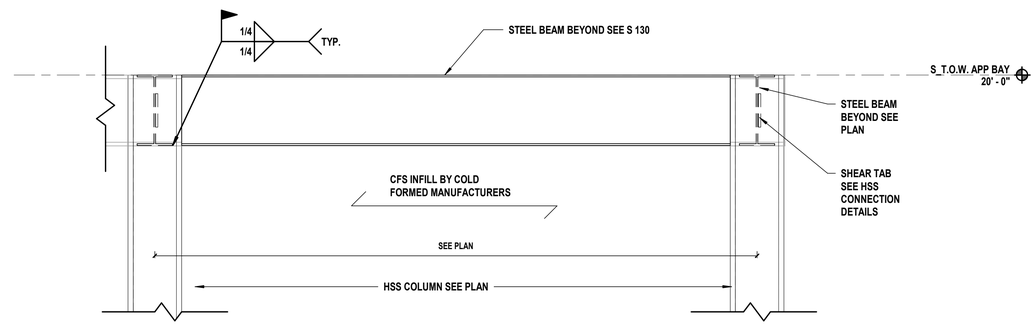

5 **App Bay Wall Projection Section**
SCALE: 1 1/2" = 1'-0"

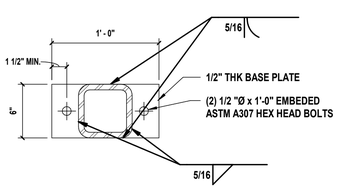

6 **Projection Frame Base Plate Detail**
SCALE: 1 1/2" = 1'-0"

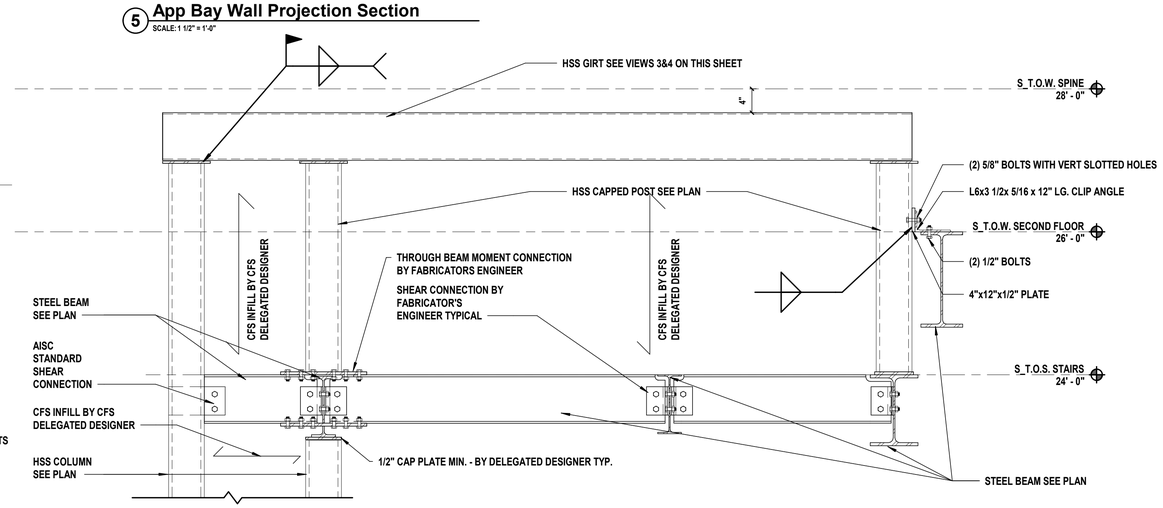

7 **Stair Roof Wall Projection Section**
SCALE: 1" = 1'-0"

NOTES:

1. SEE SECTIONS FOR T.O.S. ELEVATIONS.
2. D1 — INDICATES SPAN OF 1.5B-36 ROOF DECK BY VULCRAFT NUCOR OR APPROVED EQUAL
3. SEE PLAN FOR EDGE OF DECK DIMENSIONS.
4. INDICATES BEAM TO COLUMN MOMENT CONNECTION WITH THE NUMBER REPRESENTING THE L.R.F.D. DESIGN MOMENT IN FT-KIPS.
5. STEEL CONNECTION PIECE DETAILS SHALL BE SUBMITTED WITH CALCULATIONS SIGNED AND SEALED BY A NEW YORK STATE LICENSED PROFESSIONAL ENGINEER. CONNECTION DESIGNER SHALL DESIGN ALL MOMENT CONNECTIONS AND SIMPLE SHEAR CONNECTIONS. WHERE DESIGN SHEAR REACTION IS NOT LISTED ON DRAWINGS, IT SHALL BE TAKEN AS 15 KIPS LRFD. WHERE AXIAL FORCE IN BEAMS IS NOT LISTED IN DRAWINGS, IT SHALL BE TAKEN AS 15 KIPS LRFD. ALL CONNECTIONS SHALL BE DESIGNED CONSIDERING AXIAL, SHEAR AND MOMENT FORCES SIMULTANEOUSLY AS REQUIRED BY BUILDING CODE. SEE STRUCTURAL STEEL SPECIFICATIONS FOR ADDITIONAL DESIGN LOADING REQUIREMENTS.
6. COORDINATE DIMENSIONS OF STAIR LANDING FRAMING WITH STAIR MANUFACTURER. SEE 'A' DWGS. FOR ADDITIONAL INFORMATION.

LEGEND:

= HANGER BELOW

= CARRIED COLUMN/HANGER ABOVE

E.O.S. = EDGE OF SLAB

H 2 M architects + engineers

538 Broad Hollow Road, 4th Floor East
Melville, NY 11747
631.756.8000 • www.h2m.com
NY Architecture & Landscape Architecture: No Certificate Required
NY Engineering Certificate of Authorization No.: 0018178

CONSULTANTS:

MARK	DATE	DESCRIPTION

STATE OF NEW YORK · DANIEL J. AIELLO · 100515 · LICENSED PROFESSIONAL ENGINEER

04/30/2027 Exp. Date

DANIEL J. AIELLO, P.E.
NY PROFESSIONAL ENGINEER Lic. No. 100515

"IN ACCORDANCE WITH ARTICLE 145, SECTION 7209 OF THE NYS EDUCATION LAW, ALTERATION OF THIS DOCUMENT EXCEPT BY A LICENSED PROFESSIONAL IS ILLEGAL"

DESIGNED BY:	DRAWN BY:	CHECKED BY:	REVIEWED BY:
JJN	JJN	DJA	DJA

PROJECT No:	DATE:	SCALE:
TRFD 2302	FEBRUARY 2025	AS SHOWN

CLIENT

THIELLS ROSEVILLE FIRE DISTRICT

NEW 26-100 FIRE HEADQUARTERS

THIELLS 26 FD

65 W RAMAPO ROAD
GARNERVILLE, NY 10923

CONTRACT

CONTRACT G

STATUS

FINAL BID DOCUMENT

SHEET TITLE

WALL PROJECTION PLANS AND SECTIONS

DRAWING No.

S 400.00

C:\Users\jnieubauer\Documents\TRFD2302_Central23-S_jnieubauer.LCLC5.rvt

2/25/2025 12:05:01 PM

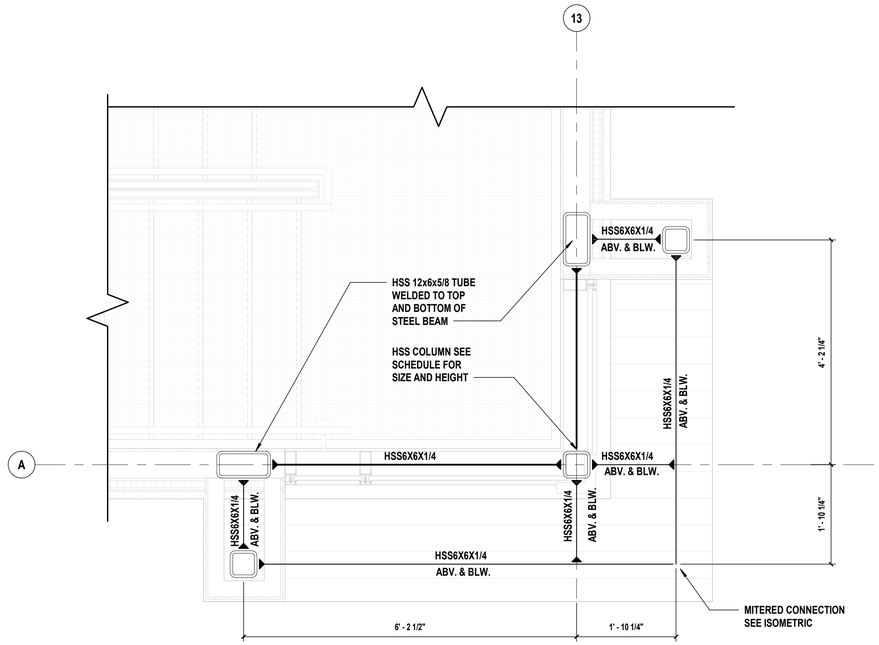

NOTE:
1. SEE PORTAL FRAMING ISOMETRIC VIEW ON THIS SHEET FOR MORE INFORMATION.
2. ALL MOMENT CONNECTIONS SHOWN IN THIS PLAN SHALL BE DESIGNED FOR 15 K-FT LRFD U.O.N.

1 Stair Portal Framing Plan
SCALE: 3/4" = 1'-0"

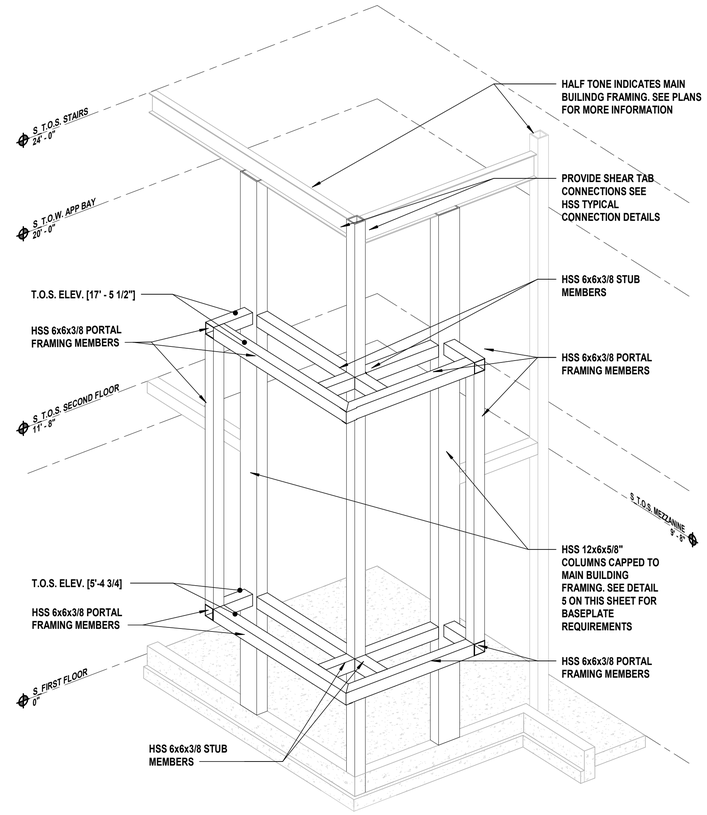

NOTE: T.O.S ELEVATIONS SHOWN ARE RELATIVE TO FINISHED FIRST FLOOR TYP.

2 Portal Framing Isometric View
SCALE:

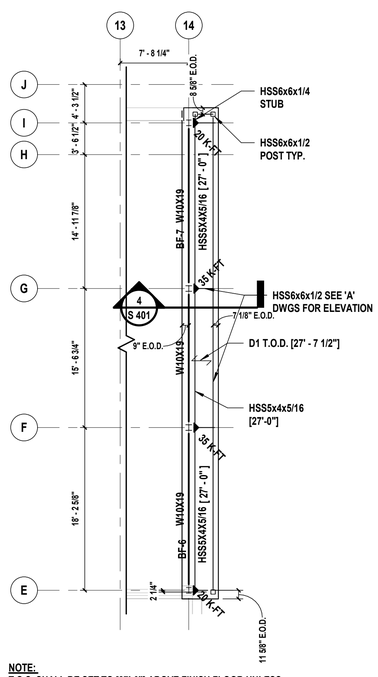

NOTE:
T.O.S. SHALL BE SET TO [27'-6"] ABOVE FINISH FLOOR UNLESS OTHERWISE NOTED.

3 Portal Frame Partial Plan
SCALE: 1/8" = 1'-0"

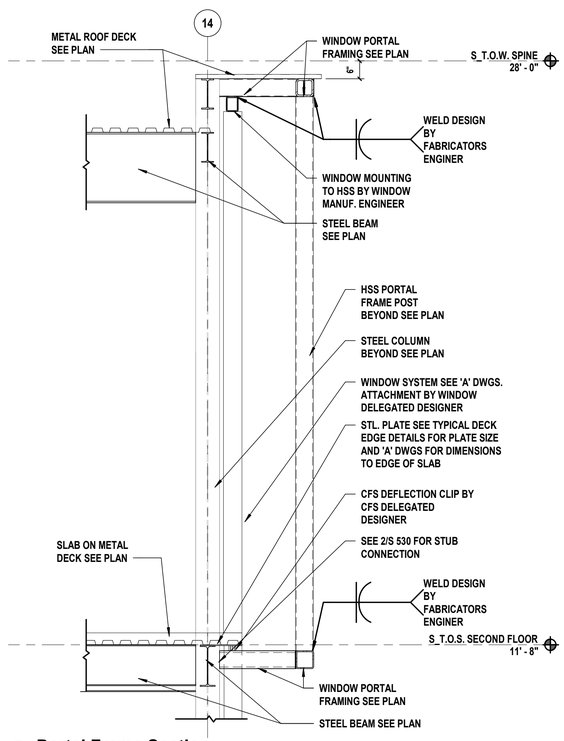

4 Portal Frame Section
SCALE: 1/2" = 1'-0"

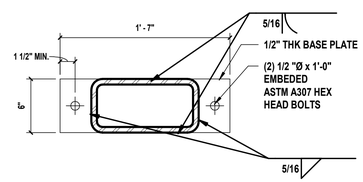

5 Stair Portal Frame Base Plate Detail
SCALE: 1 1/2" = 1'-0"

NOTES:

1. SEE VIEWS ON THIS SHEET FOR T.O.S. ELEVATIONS.
2. D1 INDICATES SPAN OF 1.5B-36 ROOF DECK BY VULCRAFT NUCOR OR APPROVED EQUAL
3. SEE PLAN FOR EDGE OF DECK DIMENSIONS.
4. INDICATES BEAM TO COLUMN MOMENT CONNECTION WITH THE NUMBER REPRESENTING THE L.R.F.D. DESIGN MOMENT IN FT-KIPS.
5. STEEL CONNECTION PIECE DETAILS SHALL BE SUBMITTED WITH CALCULATIONS SIGNED AND SEALED BY A NEW YORK STATE LICENSED PROFESSIONAL ENGINEER. CONNECTION DESIGNER SHALL DESIGN ALL MOMENT CONNECTIONS AND SIMPLE SHEAR CONNECTIONS. WHERE DESIGN SHEAR REACTION IS NOT LISTED ON DRAWINGS, IT SHALL BE TAKEN AS 15 KIPS LRFD. WHERE AXIAL FORCE IN BEAMS IS NOT LISTED IN DRAWINGS, IT SHALL BE TAKEN AS 15 KIPS LRFD. ALL CONNECTIONS SHALL BE DESIGNED CONSIDERING AXIAL, SHEAR AND MOMENT FORCES SIMULTANEOUSLY AS REQUIRED BY BUILDING CODE. SEE STRUCTURAL STEEL SPECIFICATIONS FOR ADDITIONAL DESIGN LOADING REQUIREMENTS.
6. COORDINATE DIMENSIONS OF STAIR LANDING FRAMING WITH STAIR MANUFACTURER. SEE 'A' DWGS. FOR ADDITIONAL INFORMATION.

LEGEND:

= HANGER BELOW

= CARRIED COLUMN/HANGER ABOVE

E.O.S. = EDGE OF SLAB

H2M architects + engineers
538 Broad Hollow Road, 4th Floor East
Melville, NY 11747
631.756.8000 • www.h2m.com
NY Architecture & Landscape Architecture: No Certificate Required
NY Engineering Certificate of Authorization No.: 0018178

CONSULTANTS:

MARK	DATE	DESCRIPTION

STATE OF NEW YORK · DANIEL J. AIELLO · 100515 · LICENSED PROFESSIONAL ENGINEER

04/30/2027 Exp. Date

DANIEL J. AIELLO, P.E.
NY PROFESSIONAL ENGINEER Lic. No. 100515
"IN ACCORDANCE WITH ARTICLE 145, SECTION 7209 OF THE NYS EDUCATION LAW, ALTERATION OF THIS DOCUMENT EXCEPT BY A LICENSED PROFESSIONAL IS ILLEGAL"

DESIGNED BY:	DRAWN BY:	CHECKED BY:	REVIEWED BY:
JJN	JJN	DJA	DJA

PROJECT No:	DATE:	SCALE:
TRFD 2302	FEBRUARY 2025	AS SHOWN

CLIENT
THIELLS ROSEVILLE FIRE DISTRICT

NEW 26-100 FIRE HEADQUARTERS

THIELLS 26 FD

65 W RAMAPO ROAD
GARNERVILLE, NY 10923

CONTRACT
CONTRACT G

STATUS
FINAL BID DOCUMENT

SHEET TITLE
STAIR A PORTAL FRAME PLAN AND ISOMETRIC

DRAWING No.
S 401.00

C:\Users\jnieubauer\Documents\TRFD2302_Central23-S_jnieubauerLCLC5.rvt

2/25/2025 12:05:02 PM

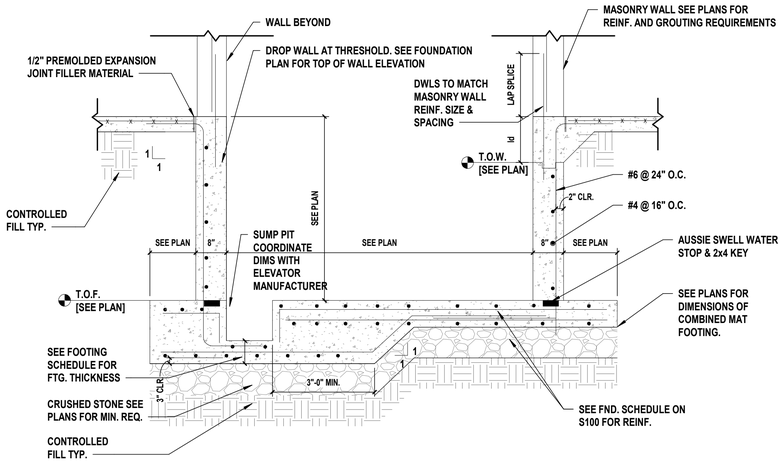

1 Elevator Pit with Sump Pit
SCALE: NTS

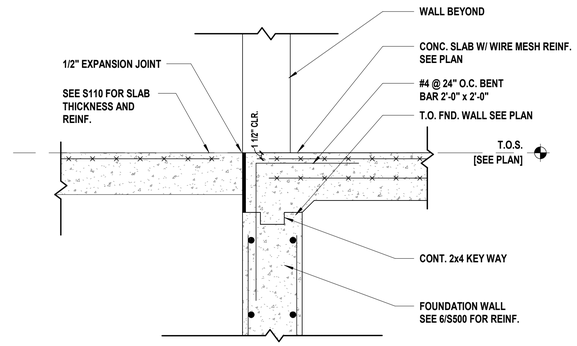

2 Interior Foundation at Door Opening
SCALE: NTS

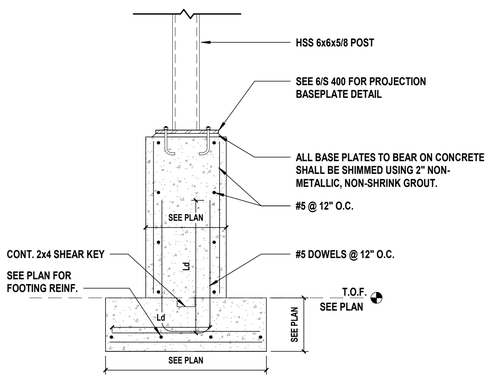

3 Foundation Wall Detail at Wall Projections
SCALE: 3/4" = 1'-0"

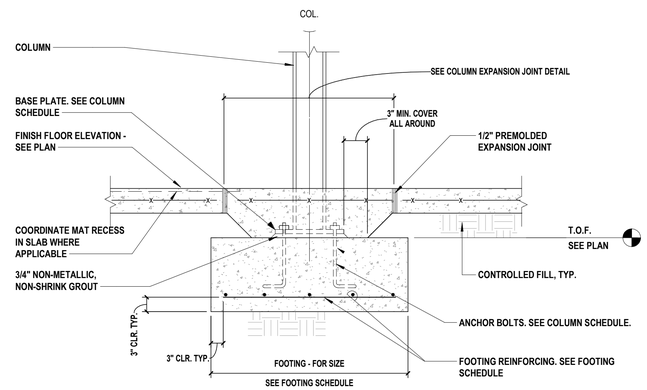

4 Interior Footing Detail
SCALE: NTS

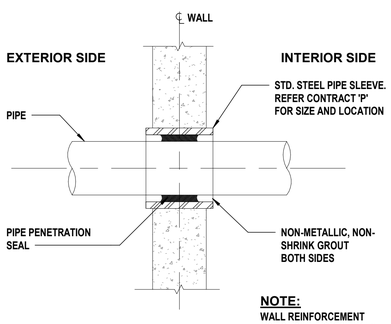

NOTE:
WALL REINFORCEMENT NOT SHOWN FOR CLARITY - SEE DETAIL THIS SHEET.

5 Pipe Penetration at Wall or Slab
SCALE: NTS

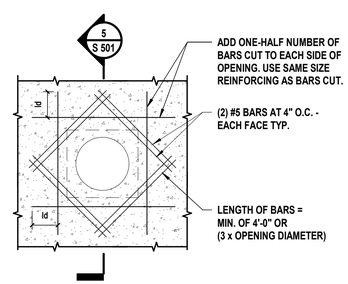

6 Pipe Penetration at Wall or Slab (Elevation)
SCALE: NTS

H2M architects + engineers
538 Broad Hollow Road, 4th Floor East
Melville, NY 11747
631.756.8000 • www.h2m.com
NY Architecture & Landscape Architecture: No Certificate Required
NY Engineering Certificate of Authorization No.: 0018178

CONSULTANTS:

MARK	DATE	DESCRIPTION

STATE OF NEW YORK · DANIEL J. AIELLO · 100515 · LICENSED PROFESSIONAL ENGINEER

04/30/2027
Exp. Date

DANIEL J. AIELLO, P.E.
NY PROFESSIONAL ENGINEER Lic. No. 100515

"IN ACCORDANCE WITH ARTICLE 145, SECTION 7209 OF THE NYS EDUCATION LAW, ALTERATION OF THIS DOCUMENT EXCEPT BY A LICENSED PROFESSIONAL IS ILLEGAL"

DESIGNED BY:	DRAWN BY:	CHECKED BY:	REVIEWED BY:
JJN	SRK	JJN	DJA
PROJECT No: TRFD 2302	DATE: FEBRUARY 2025	SCALE: AS SHOWN	

CLIENT
THIELLS ROSEVILLE FIRE DISTRICT

NEW 26-100 FIRE HEADQUARTERS

65 W RAMAPO ROAD
GARNERVILLE, NY 10923

CONTRACT
CONTRACT G

STATUS
FINAL BID DOCUMENT

SHEET TITLE
FOUNDATION DETAILS

DRAWING No.
S 501.00

C:\Users\jneubauer\Documents\TRFD2302_Central23-S_jneubauerLCLC5.rvt
2/25/2025 12:05:03 PM

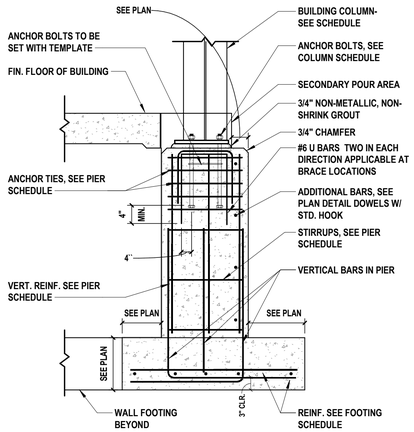

SECTION

1 Concrete Pier/Footing Section Detail

SCALE: NTS

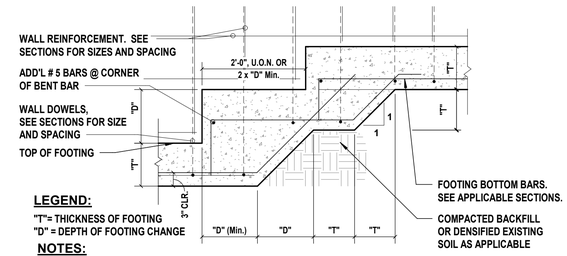

LEGEND:

"T"= THICKNESS OF FOOTING
"D" = DEPTH OF FOOTING CHANGE

NOTES:

1. TOP REINFORCEMENT FOR RETAINING WALL/ COLUMN SUPPORT FOOTINGS NOT SHOWN FOR CLARITY.
2. COORDINATE STEP LOCATIONS WITH STRUCTURAL ENGINEER IF STEP IS NOT INDICATED ON THESE DRAWINGS.

2 Typical Stepped Footing Detail

SCALE: NTS

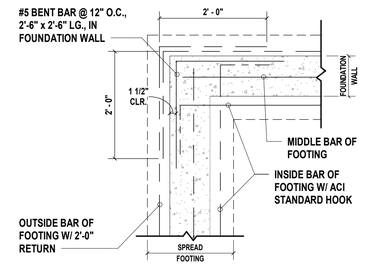

PLAN VIEW

NOTES:

1. VERTICAL WALL REINFORCEMENT NOT SHOWN FOR CLARITY

3 Corner of Building Fnd/Fgt

SCALE: NTS

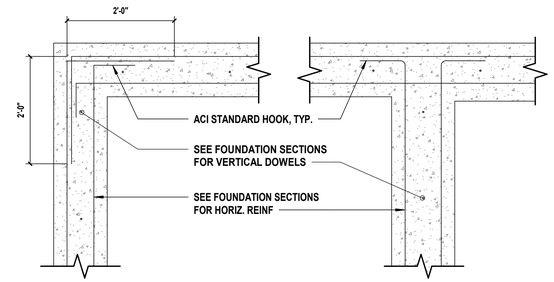

OUTSIDE CORNER **INTERSECTION**

4 Corner Horizontal Reinforcement at Foundation Wall or Footing

SCALE: NTS

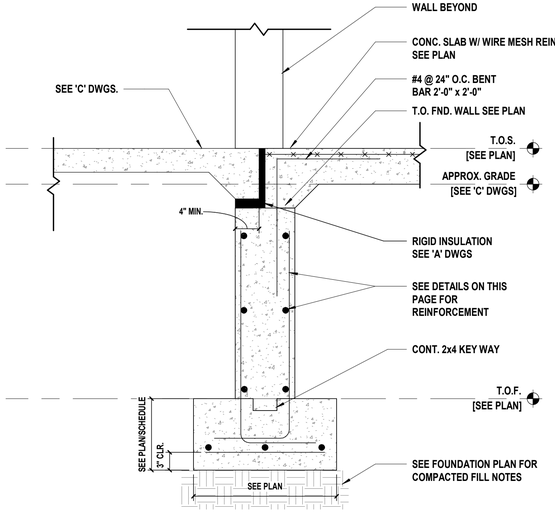

5 Haunched Slab on Grade at Doorway

SCALE: NTS

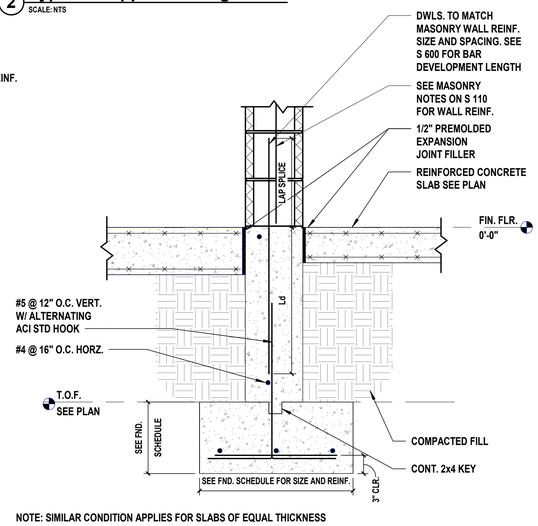

NOTE: SIMILAR CONDITION APPLIES FOR SLABS OF EQUAL THICKNESS

6 Interior 8" Wide Foundation Wall

SCALE: NTS

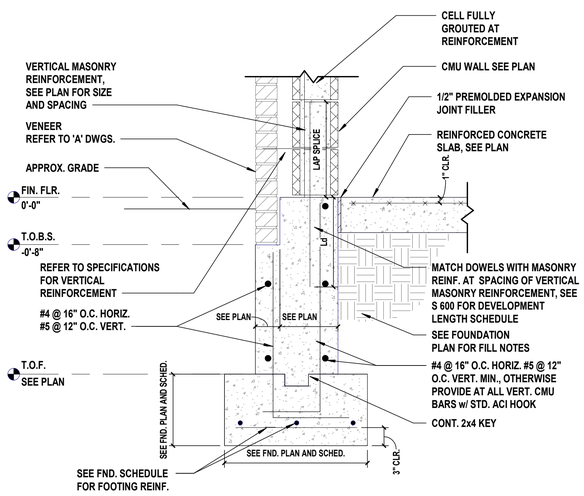

7 Exterior Foundation Wall With Brick Shelf

SCALE: NTS

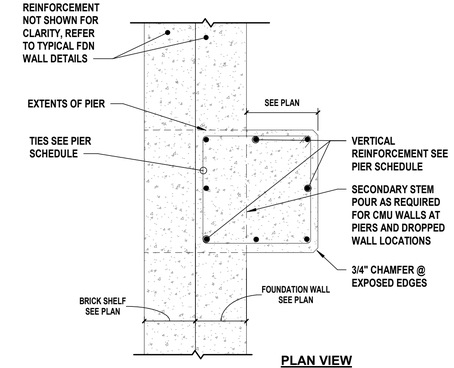

PLAN VIEW

8 Typical Pier/Foundation Wall/Brick Shelf Intersection

SCALE: NTS

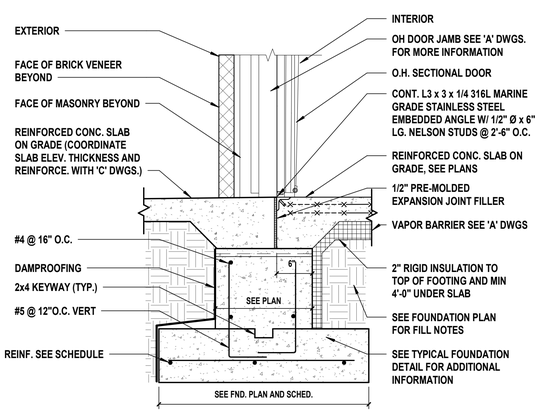

NOTE: EMBEDDED ANGLE LENGTH SHALL EXTEND FULL LENGTH OF O.H. DOOR OPENING WITH 4" ADDITIONAL EMBEDDED CLOSURE ANGLE EXTENDING TO MASONRY WALL/EDGE OF SLAB AT EA. END (MITER CORNER FOR SMOOTH EXPOSED SURFACE). REFER TO 'A' DWGS. FOR ADDITIONAL INFORMATION.

9 Thickened Wall at Overhead Door

SCALE: NTS

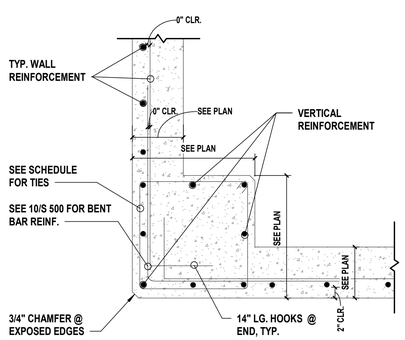

PLAN VIEW

NOTE:

1. CONDITION AT SINGLE LAYER OF WALL REINFORCEMENT SHOWN. DOUBLE LAYER REINFORCEMENT CONDITION SIMILAR.

10 Corner Pier/Foundation Wall Intersection

SCALE: NTS

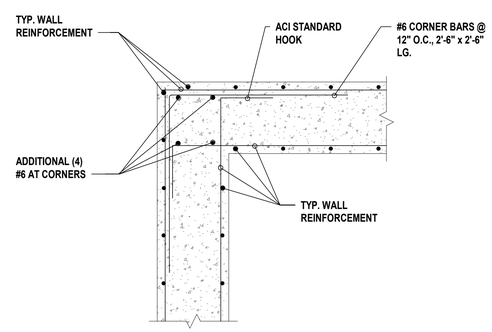

11 Wall Corner Reinforcement with Additional Vertical Bars

SCALE: NTS

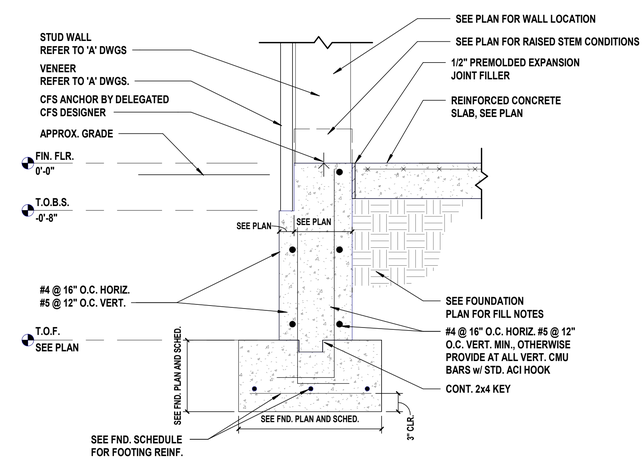

12 Exterior Foundation Wall With Panel Shelf

SCALE: NTS

H2M architects + engineers

538 Broad Hollow Road, 4th Floor East
Melville, NY 11747
631.756.8000 • www.h2m.com
NY Architecture & Landscape Architecture: No Certificate Required
NY Engineering Certificate of Authorization No.: 0018178

CONSULTANTS:

MARK	DATE	DESCRIPTION

STATE OF NEW YORK · DANIEL J. AIELLO · 100515 · LICENSED PROFESSIONAL ENGINEER

04/30/2027
Exp. Date

DANIEL J. AIELLO, P.E.
NY PROFESSIONAL ENGINEER Lic. No. 100515

"IN ACCORDANCE WITH ARTICLE 145, SECTION 7209 OF THE NYS EDUCATION LAW, ALTERATION OF THIS DOCUMENT EXCEPT BY A LICENSED PROFESSIONAL IS ILLEGAL"

DESIGNED BY:	DRAWN BY:	CHECKED BY:	REVIEWED BY:
JJN	SRK	JJN	DJA
PROJECT No: TRFD 2302	DATE: FEBRUARY 2025		SCALE: AS SHOWN

CLIENT

THIELLS ROSEVILLE FIRE DISTRICT

NEW 26-100 FIRE HEADQUARTERS

65 W RAMAPO ROAD GARNERVILLE, NY 10923

CONTRACT

CONTRACT G

STATUS

FINAL BID DOCUMENT

SHEET TITLE

FOUNDATION DETAILS

DRAWING No.

S 500.00

C:\Users\jneubauer\Documents\TRFD2302_Central23-S_jneubauer.LCLC5.rvt

2/25/2025 12:05:03 PM

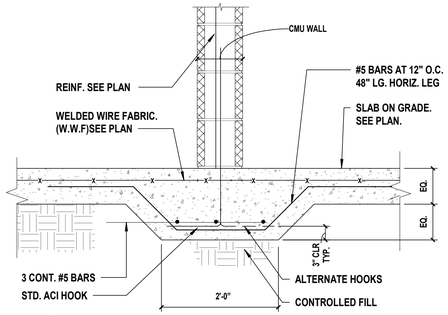

NOTE
VAPOR BARRIER TO BE CONTINUOUS UNDER THICKENED SLAB.

1 Haunched Slab at Masonry Non-Load-Bearing Partition
SCALE: NTS

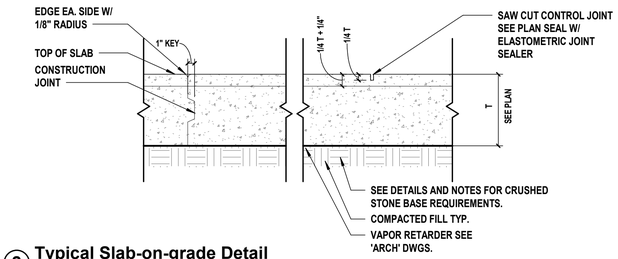

2 Typical Slab-on-grade Detail
SCALE: NTS

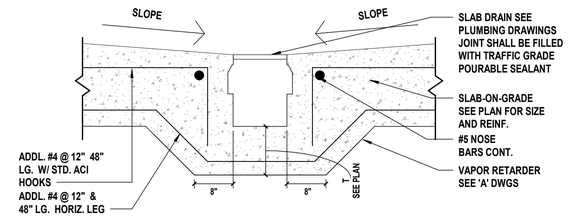

3 Trench Drain Detail
SCALE: NTS

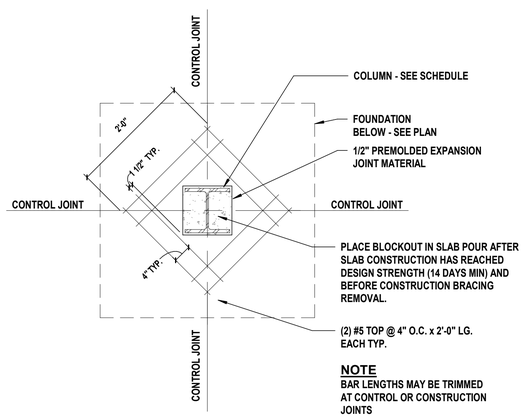

NOTE
BAR LENGTHS MAY BE TRIMMED
AT CONTROL OR CONSTRUCTION
JOINTS

SQUARE BLOCKOUT TIGHT TO COLUMN

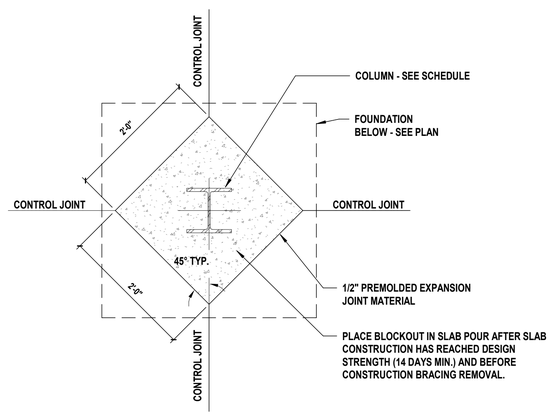

DIAMOND BLOCKOUT AROUND COLUMN

4 Column Expansion Joint Details
SCALE: NTS

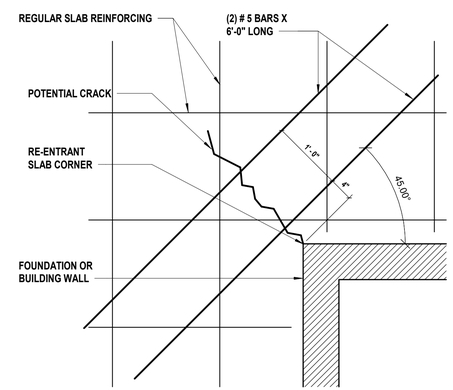

NOTE: THIS DETAIL IS ALSO APPLICABLE TO TRENCH DRAIN ENDS. LENGTH OF REBAR TO BE 2'-0".

5 Typical Slab Re-Entrant Corner Reinforcement
SCALE: NTS

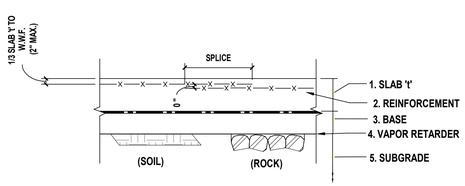

TYPICAL DETAIL- SLAB ON GROUND

NOTE:

1. SLAB THICKNESS NOTED ON PLANS.
2. REINFORCEMENT: SEE PLAN
3. BASE = SEE PLAN NOTES, SPECS AND REFER TO DIRECTION OF GEOTECHNICAL REPORT
4. VAPOR RETARDER (VAPOR "BARRIER"): SEE 'A' DWGS.
5. SUBGRADE: COMPACTED STRUCTURAL FILL, BACKFILL OR UNDISTURBED NATIVE SOIL.
6. PER GEOTECHNICAL REPORT CONTRACTOR SHALL BE RESPONSIBLE TO REMOVE ALL UNSUITABLE BEARING MATERIALS PER SUBGRADE INSPECTIONS.

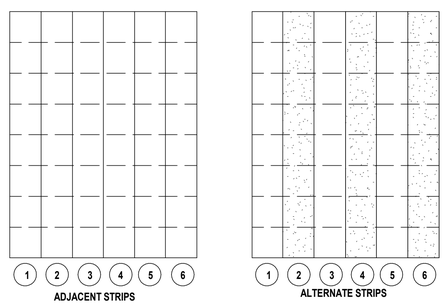

SUGGESTED SEQUENCE OF CASTING STRIPS

SLAB ON GROUND NOTES:

1. SLAB ON GROUND SHALL BE PLACED IN STRIPS, AS SHOWN IN "SUGGESTED SEQUENCE OF CASTING STRIPS".
2. CONTROL JOINTS SHALL BE SAWCUT AS SOON CONCRETE IS HARD ENOUGH NOT TO BE TORN OR DAMAGED BY THE BLADE, AND BEFORE THE CONCRETE STARTS TO COOL. TYPICALLY JOINTS SHOULD BE CUT 4 TO 12 HOURS AFTER THE SLAB HAS BEEN FINISHED, DEPENDING UPON WEATHER AND JOB CONDITIONS.
3. SPACING OF SAWCUT CONTROL JOINTS (IN FEET) TO BE APPROXIMATELY THREE TIMES THE SLAB THICKNESS IN INCHES, WITH A MAXIMUM OF TWENTY (20) FEET.
4. A MAXIMUM RATIO OF 1.5 SHALL BE MAINTAINED BETWEEN LONG AND SHORT DIMENSIONS OF PANELS FORMED BY CONSTRUCTION AND CONTROL JOINTS.

LEGEND:

- STRIPS CAST FIRST
- INFILL STRIPS
- FORMED JOINTS
- SAWCUT JOINTS

6 Typical Slab on Grade Detail
SCALE: NTS

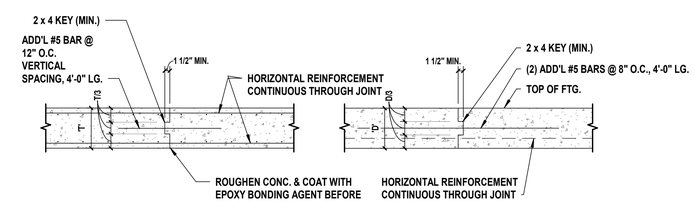

NOTE:
KEY WIDTH NOT TO EXCEED 1/3 WIDTH OF WALL IN GRADE BEAM. VERTICAL CONSTRUCTION JOINT PERMITTED IN WALL OR GRADE AT ANY POINT 4'-0" MIN. AWAY FROM FACE OF SUPPORTING PIER, BUTTRESS AND/OR WALL OPENING. PROVIDE ONE VERTICAL CONSTRUCTION JOINT FOR EVERY 40'-0" OF STRAIGHT RUN OF WALL.

VERTICAL CONSTRUCTION JOINT IN WALL OR GRADE BEAM

VERTICAL CONSTRUCTION JOINT IN CONTINUOUS FOOTING

NOTE:
SUBMIT CONSTRUCTION JOINT LAYOUT FOR ALL CONCRETE STRUCTURES FOR ENGINEER'S REVIEW

7 Construction Joint Details
SCALE: NTS

H2M architects + engineers
538 Broad Hollow Road, 4th Floor East
Melville, NY 11747
631.756.8000 • www.h2m.com
NY Architecture & Landscape Architecture: No Certificate Required
NY Engineering Certificate of Authorization No.: 0018178

CONSULTANTS:

MARK	DATE	DESCRIPTION

STATE OF NEW YORK · DANIEL J. AIELLO · 100515 · LICENSED PROFESSIONAL ENGINEER

04/30/2027
Exp. Date

DANIEL J. AIELLO, P.E.
NY PROFESSIONAL ENGINEER Lic. No. 100515

"IN ACCORDANCE WITH ARTICLE 145, SECTION 7209 OF THE NYS EDUCATION LAW, ALTERATION OF THIS DOCUMENT EXCEPT BY A LICENSED PROFESSIONAL IS ILLEGAL"

DESIGNED BY:	DRAWN BY:	CHECKED BY:	REVIEWED BY:
JJN	JJN	DJA	DJA

PROJECT No:	DATE:	SCALE:
TRFD 2302	FEBRUARY 2025	AS SHOWN

CLIENT

THIELLS ROSEVILLE FIRE DISTRICT

NEW 26-100 FIRE HEADQUARTERS

65 W RAMAPO ROAD
GARNERVILLE, NY 10923

CONTRACT
CONTRACT G

STATUS
FINAL BID DOCUMENT

SHEET TITLE
SLAB DETAILS

DRAWING No.
S 510.00

C:\Users\jneubauer\Documents\TRFD2302_Central2-S_jneubauer.LCLC5.rvt
2/25/2025 12:05:04 PM

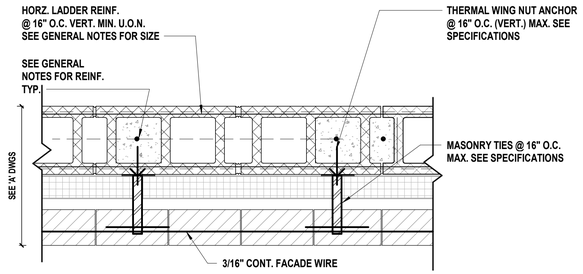

1 Typical CMU Wall Reinforcing Detail
SCALE: NTS

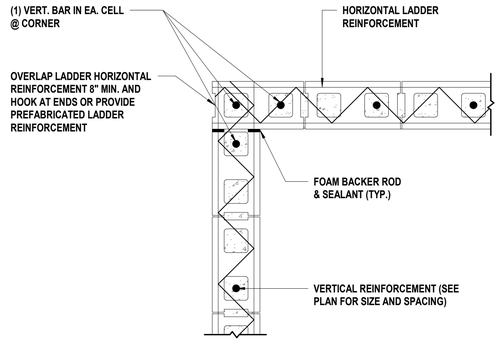

AT CMU BLOCKS

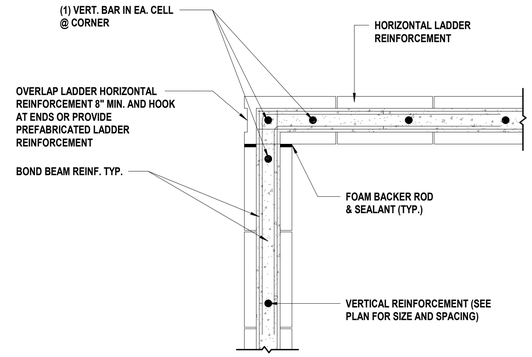

AT CMU BOND BEAMS

2 Typical CMU Corner Reinforcement Detail
SCALE: NTS

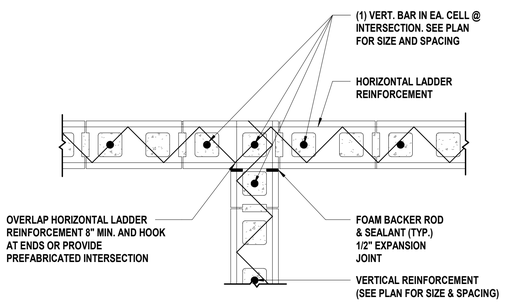

3 Typical CMU Intersection Reinforcement Detail
SCALE: NTS

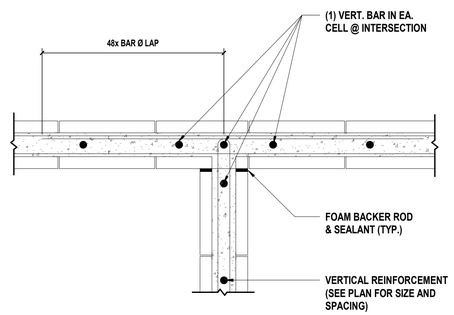

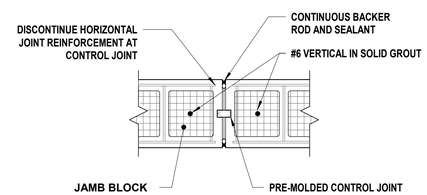

4 Typical CMU Wall Control Joint
SCALE: NTS

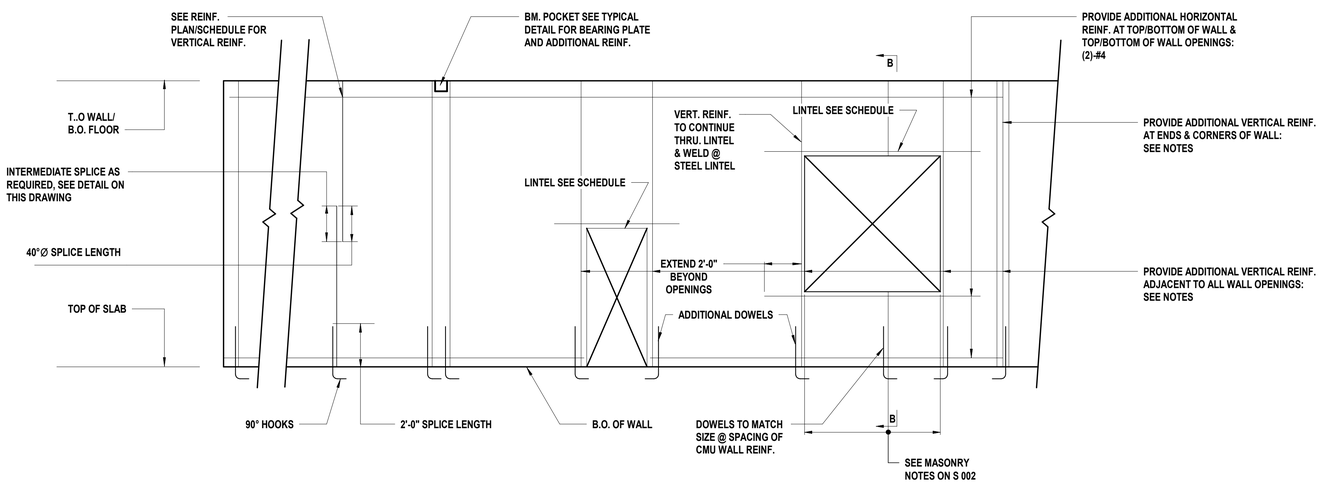

WALL REINFORCEMENT ELEVATION NOTES:

1. ABOVE DETAIL APPLIES TO ALL MASONRY (C.M.U.) WALLS
2. DETAIL DOES NOT SHOW GENERAL REINFORCEMENT SEE PLANS & SCHEDULES FOR REINFORCEMENT SIZE AND SPACING.
3. DETAIL DOES NOT SHOW BOND BEAM, LADDER REINFORCEMENT, ETC. FOR CLARITY.
4. FOR MULTI-WYTHE EXTERIOR WALLS ABOVE DETAIL APPLIES TO C.M.U. BACKUP WALL ONLY. SEE ARCH DWGS FOR ADDITIONAL INFORMATION.
5. FOR C.M.U. MASONRY NOTES SEE S 002.

5 Typical CMU Wall Elevation Detail
SCALE: NTS

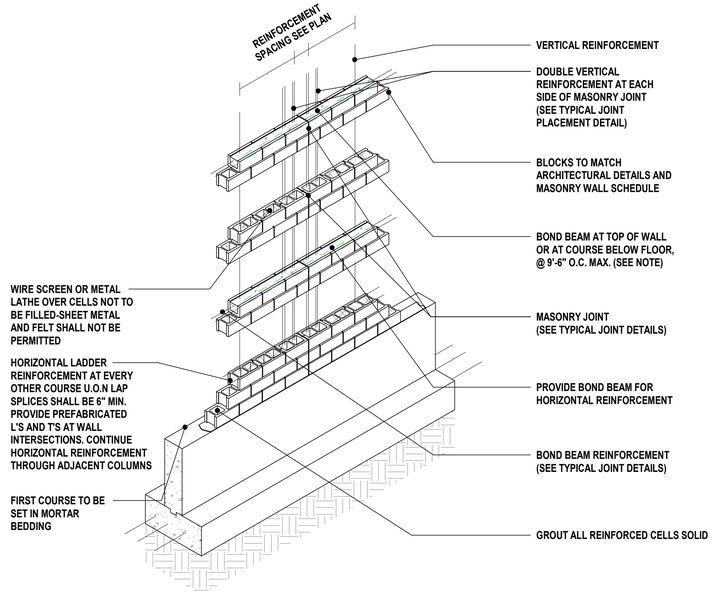

NOTE: IF FLOOR HEIGHT EXCEEDS 9'-6", PROVIDE A BOND BEAM AT THE MID HEIGHT OF THE WALL

6 Typical CMU Wall Bond Beam Elevation Detail
SCALE: NTS

H 2 M architects + engineers

538 Broad Hollow Road, 4th Floor East
Melville, NY 11747
631.756.8000 • www.h2m.com
NY Architecture & Landscape Architecture: No Certificate Required
NY Engineering Certificate of Authorization No.: 0018178

CONSULTANTS:

MARK	DATE	DESCRIPTION

STATE OF NEW YORK · DANIEL J. AIELLO · 100515 · LICENSED PROFESSIONAL ENGINEER

04/30/2027
Exp. Date

DANIEL J. AIELLO, P.E.
NY PROFESSIONAL ENGINEER Lic. No. 100515

"IN ACCORDANCE WITH ARTICLE 145, SECTION 7209 OF THE NYS EDUCATION LAW, ALTERATION OF THIS DOCUMENT EXCEPT BY A LICENSED PROFESSIONAL IS ILLEGAL"

DESIGNED BY:	DRAWN BY:	CHECKED BY:	REVIEWED BY:
JJN	SRK	JJN	DJA
PROJECT No: TRFD 2302	DATE: FEBRUARY 2025	SCALE: AS SHOWN	

CLIENT

THIELLS ROSEVILLE FIRE DISTRICT

NEW 26-100 FIRE HEADQUARTERS

THIELLS 26 FD

65 W RAMAPO ROAD
GARNERVILLE, NY 10923

CONTRACT

CONTRACT G

STATUS

FINAL BID DOCUMENT

SHEET TITLE

MASONRY DETAILS

DRAWING No.

S 520.00

C:\Users\jneubauer\Documents\TRFD2302_Central23-S_jneubauerLCLC5.rvt

2/25/2025 12:05:04 PM

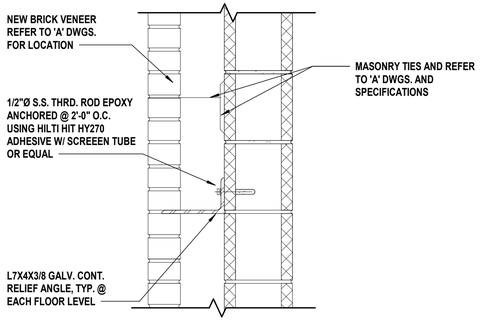

NOTE:
REFER TO 'A' DWGS. FOR INSULATION REQUIREMENTS AS WELL AS ADDITIONAL INFO FOR MASONRY NOT DEPICTED HERE.

1 Veneer Relief Angle At CMU Wall
SCALE: NTS

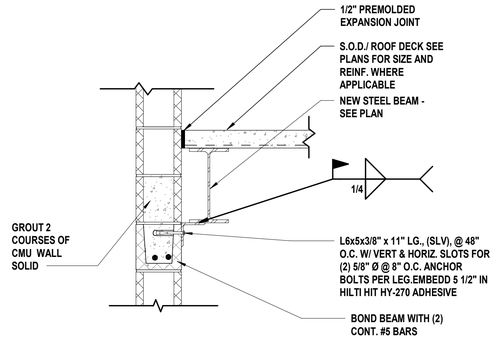

2 CMU Wall Bracing Detail
SCALE: 1" = 1'-0"

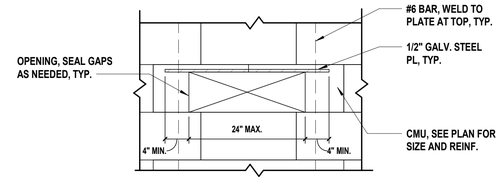

NOTE: SEE 'M' DRAWINGS FOR PENETRATION LOCATIONS

3 CMU Opening 8" - 24"
SCALE: NTS

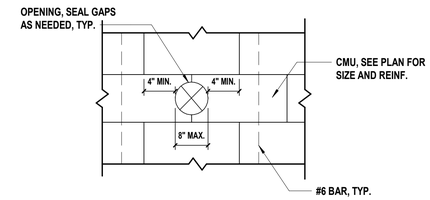

NOTE: SEE 'M' DRAWINGS FOR PENETRATION LOCATIONS

4 CMU Opening 8" and Less
SCALE: NTS

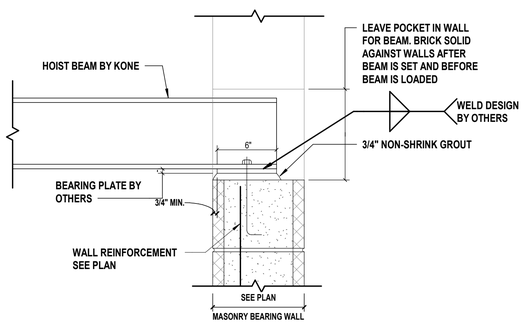

NOTE:
FILL HOLLOWS IN WALL UNDER BEARING PLATE SOLID WITH MORTAR BEFORE PLACING BEARING PLATE.

5 Elevator Hoist Beam Bearing on CMU Wall
SCALE: 1" = 1'-0"

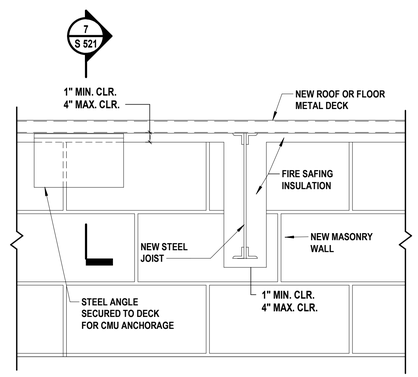

NOTE: DETAIL APPLIES FOR W-SHAPE STEEL BEAMS AS WELL

6 Joist Thru Non-bearing CMU Wall
SCALENTS

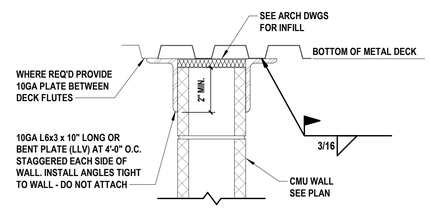

SECTION A

7 Non-Bearing CMU Wall Bracing Detail
SCALE: 1" = 1'-0"

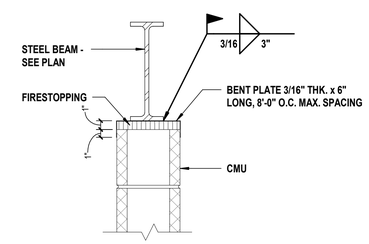

8 Typical CMU Beam Bracing
SCALE: NTS

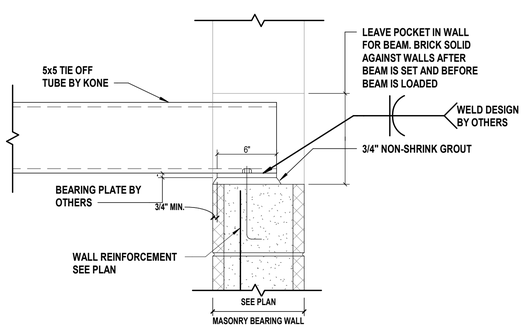

NOTE:
FILL HOLLOWS IN WALL UNDER BEARING PLATE SOLID WITH MORTAR BEFORE PLACING BEARING PLATE.

9 Elevator Tie-Off Bearing on CMU Wall
SCALE: 1" = 1'-0"

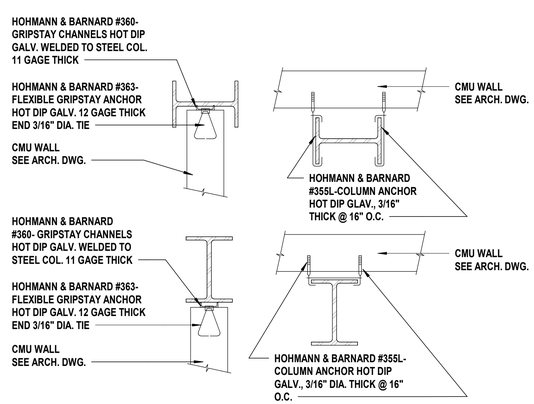

10 Masonry Ties at Steel Column
SCALENTS

H 2 M architects + engineers

538 Broad Hollow Road, 4th Floor East
Melville, NY 11747
631.756.8000 • www.h2m.com
NY Architecture & Landscape Architecture: No Certificate Required
NY Engineering Certificate of Authorization No.: 0018178

CONSULTANTS:

MARK	DATE	DESCRIPTION

STATE OF NEW YORK · DANIEL J. AIELLO · 100515 · LICENSED PROFESSIONAL ENGINEER

04/30/2027
Exp. Date

DANIEL J. AIELLO, P.E.
NY PROFESSIONAL ENGINEER Lic. No. 100515

"IN ACCORDANCE WITH ARTICLE 145, SECTION 7209 OF THE NYS EDUCATION LAW, ALTERATION OF THIS DOCUMENT EXCEPT BY A LICENSED PROFESSIONAL IS ILLEGAL"

DESIGNED BY:	DRAWN BY:	CHECKED BY:	REVIEWED BY:
JJN	SRK	JJN	DJA
PROJECT No: TRFD 2302	DATE: FEBRUARY 2025	SCALE: AS SHOWN	

CLIENT

THIELLS ROSEVILLE FIRE DISTRICT

NEW 26-100 FIRE HEADQUARTERS

65 W RAMAPO ROAD
GARNERVILLE, NY 10923

CONTRACT

CONTRACT G

STATUS

FINAL BID DOCUMENT

SHEET TITLE

MASONRY DETAILS

DRAWING No.

S 521.00

C:\Users\jnieubauer\Documents\TRFD2302_Central23-S_jnieubauer.LCLC5.rvt

2/25/2025 12:05:05 PM

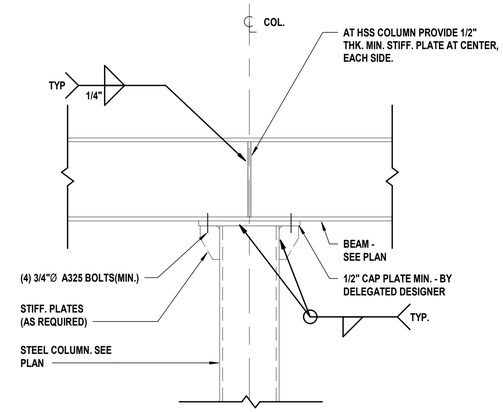

1 Beam Cantilever Over Column
SCALE: NTS

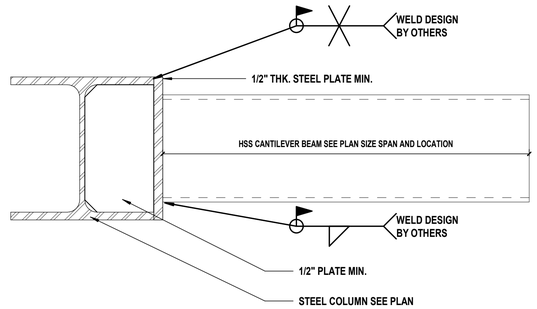

2 Face Mounted HSS Moment Connection
SCALE: 3" = 1'-0"

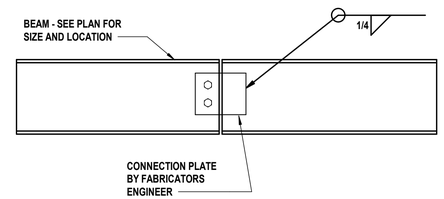

3 Shear Splice Connection Detail
SCALE: NTS

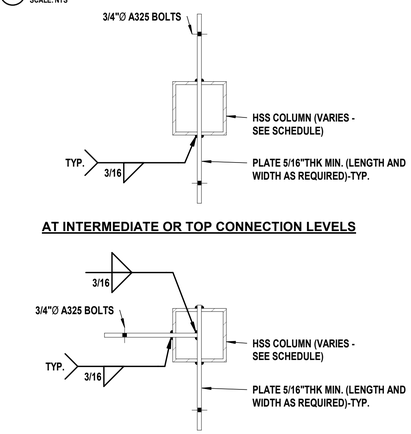

4 Shear Connections at HSS Steel Columns
SCALE: NTS

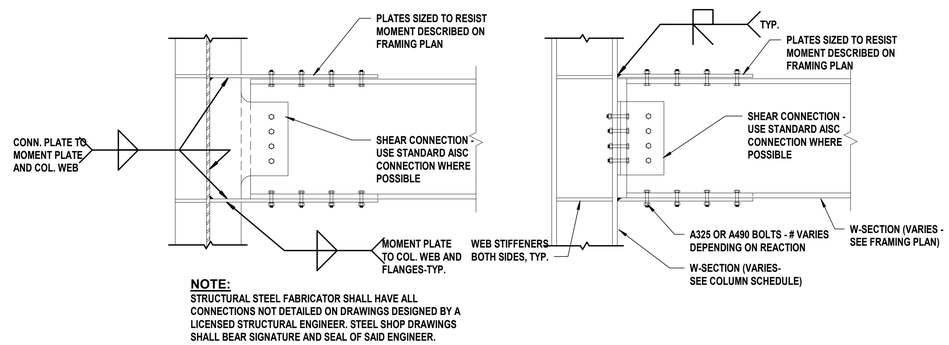

NOTE:
STRUCTURAL STEEL FABRICATOR SHALL HAVE ALL CONNECTIONS NOT DETAILED ON DRAWINGS DESIGNED BY A LICENSED STRUCTURAL ENGINEER. STEEL SHOP DRAWINGS SHALL BEAR SIGNATURE AND SEAL OF SAID ENGINEER.

5 Beam to Column Moment Connection
SCALE: NTS

NOTE- ALL CONNECTIONS SHOWN HEREIN IS TO BE DESIGNED BY THE DELEGATED CONNECTION DESIGNER.

7 Through-Beam Moment Connection at Apparatus Bay
SCALE: 1" = 1'-0"

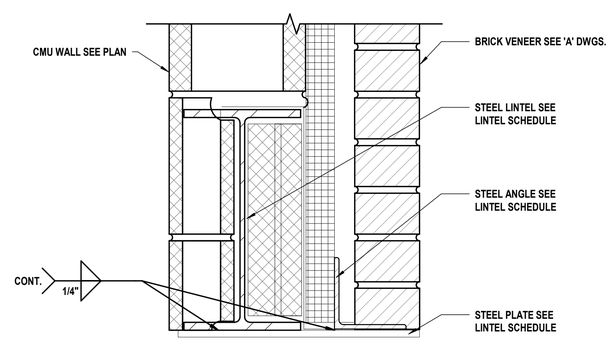

NOTE- WELD ALL VERTICAL REBAR IN CMU WALL TO STEEL BEAM

9 Section at Overhead Door Lintel
SCALE: NTS

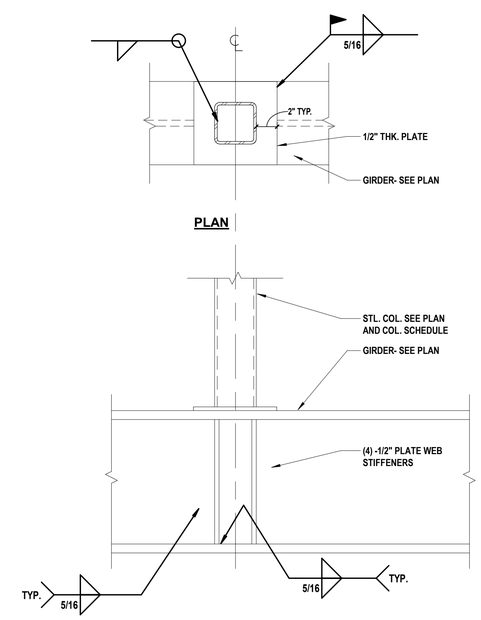

NOTE: SIMILAR DETAIL APPLIES FOR W-SHAPED COLUMNS

10 Carried Column Or Post
SCALE: NTS

H2M architects + engineers
538 Broad Hollow Road, 4th Floor East
Melville, NY 11747
631.756.8000 • www.h2m.com
NY Architecture & Landscape Architecture: No Certificate Required
NY Engineering Certificate of Authorization No.: 0018178

CONSULTANTS:

MARK	DATE	DESCRIPTION

STATE OF NEW YORK · DANIEL J. AIELLO · 100515 · LICENSED PROFESSIONAL ENGINEER

04/30/2027 Exp. Date

DANIEL J. AIELLO, P.E.
NY PROFESSIONAL ENGINEER Lic. No. 100515

"IN ACCORDANCE WITH ARTICLE 145, SECTION 7209 OF THE NYS EDUCATION LAW, ALTERATION OF THIS DOCUMENT EXCEPT BY A LICENSED PROFESSIONAL IS ILLEGAL"

DESIGNED BY:	DRAWN BY:	CHECKED BY:	REVIEWED BY:
SRK	SRK	JJN	DJA
PROJECT No: TRFD 2302	DATE: FEBRUARY 2025		SCALE: AS SHOWN

CLIENT

THIELLS ROSEVILLE FIRE DISTRICT

NEW 26-100 FIRE HEADQUARTERS

THIELLS 26 FD

65 W RAMAPO ROAD
GARNERVILLE, NY 10923

CONTRACT
CONTRACT G
GENERAL CONSTRUCTION

STATUS
FINAL BID DOCUMENT

SHEET TITLE
STRUCTURAL STEEL DETAILS

DRAWING No.
S 530.00

C:\Users\jnesbauer\Documents\TRFD2302_Central23-S_jnesbauer.LCLC5.rvt
2/25/2025 12:05:06 PM

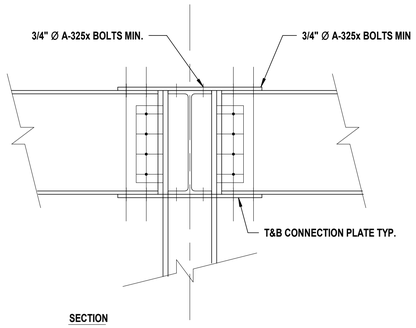

SECTION

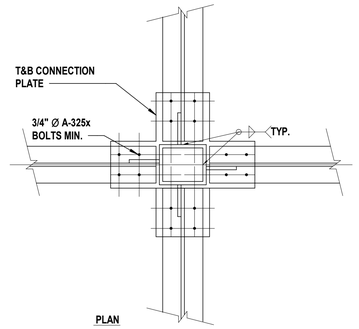

PLAN

4 WAY HSS MOMENT CONNECTIONS

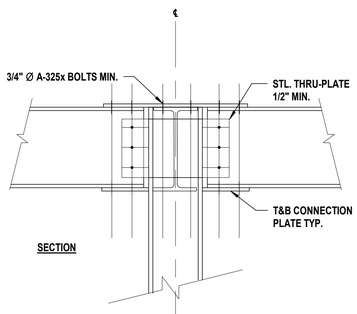

SECTION

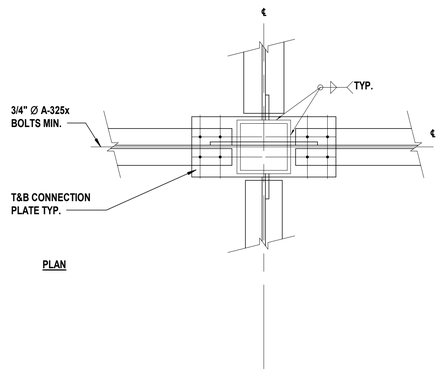

PLAN

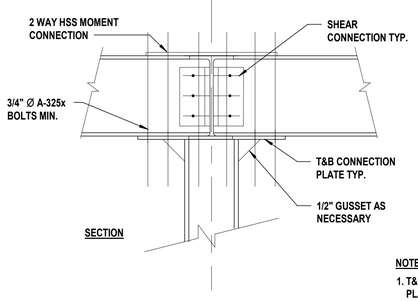

SECTION

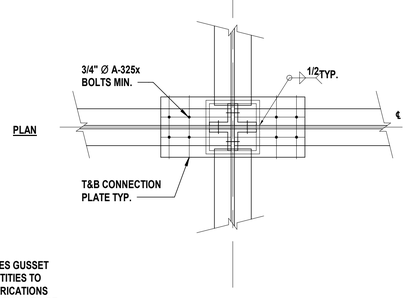

PLAN

NOTE:

1. T&B PLATES, THRU PLATES GUSSET PLATES AND BOLT QUANTITIES TO ROLE, DESIGNED BY FABRICATIONS ENGINEER AND CALCULATIONS TO BE SUBMITTED TO E.O.R.

ALTERNATE HSS MOMENT CONNECTIONS

1 HSS Moment Connections

SCALE: 3/4" = 1'-0"

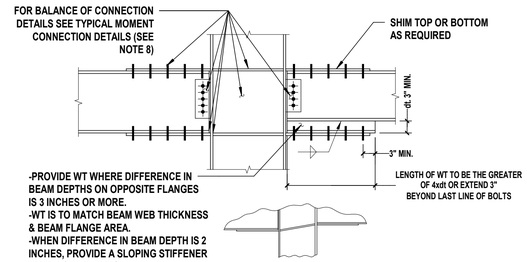

BEAM TO COLUMN FLANGE WITH DIFFERENT BEAM DEPTHS
(BEAM TO COLUMN WEB SIMILAR SEE EQUAL DEPTH CONNECTIONS)

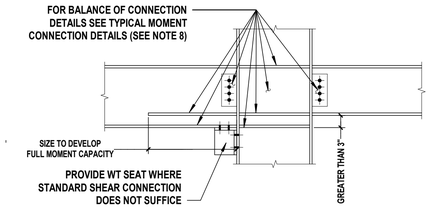

ALTERNATE BEAM TO COLUMN FLANGE WITH DIFFERENT BEAM DEPTHS
(BEAM TO COLUMN WEB SIMILAR SEE EQUAL DEPTH CONNECTIONS)

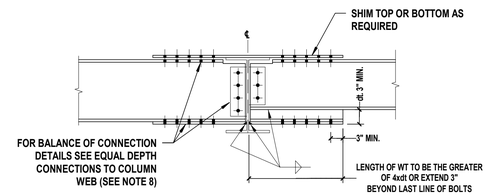

BEAM TO BEAM WITH DIFFERENT DEPTHS

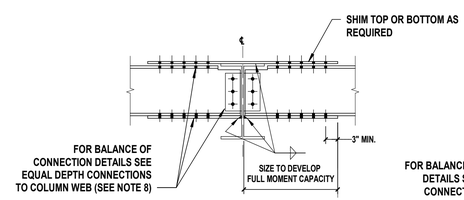

BEAM TO BEAM WITH DIFFERENT DEPTHS

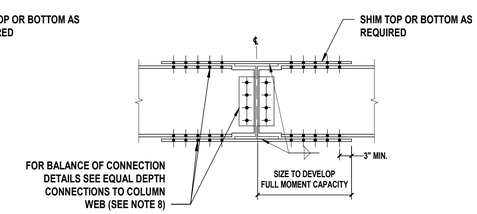

BEAM TO BEAM WITH DIFFERENT DEPTHS

2 Through-Beam and Stepped Moment Connection Details

SCALE: 3/4" = 1'-0"

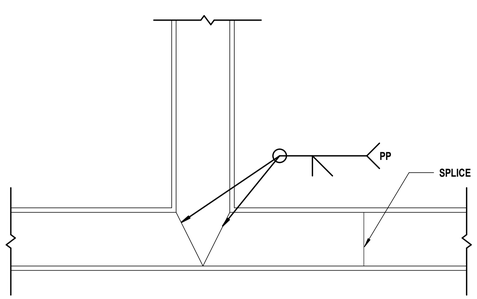

TYPICAL BEAM-TO-BEAM CONNECTION AT INTERIOR INTERSECTION

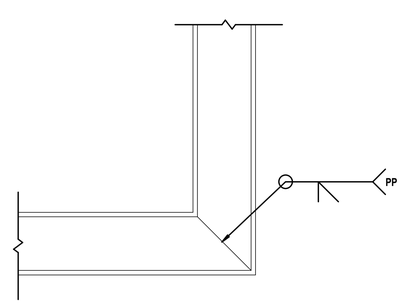

TYPICAL BEAM-TO-BEAM CONNECTION AT EXTERIOR CORNER

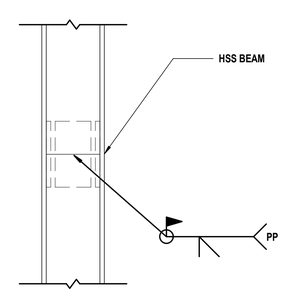

TYPICAL SPLICE DETAIL

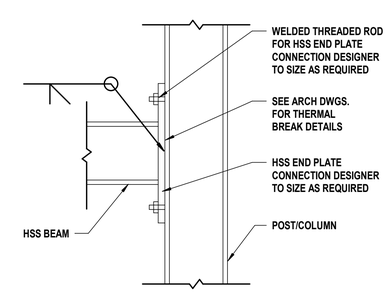

TYPICAL BEAM-TO-COLUMN CONNECTION WITH BEAM FRAMING INTO COLUMN

NOTES:

1. WHERE SMALLER HSS INTERSECTS LARGER HSS, FILLET WELDS SHALL BE SUBSTITUTED FOR FLARE BEVEL WELDS.

2. FABRICATOR TO COORDINATE WHERE SPLICES ARE REQUIRED FOR SHIPMENT AND FABRICATION REFER TO TYPICAL DETAIL HEREIN FOR INTENT.

3. ALL EXPOSED STEEL SHALL BE GALVANIZED.

4. REFER TO SCREEN MANUFACTURER SPECS AND DETAILS FOR ATTACHMENT OF SCREEN TO HSS TUBES

3 HSS Outrigger Details

SCALE: NTS

C:\Users\jneubauer\Documents\TRFD2302_Central23-S_jneubauerLCLC5.rvt

2/25/2025 12:05:06 PM

H 2 M architects + engineers

538 Broad Hollow Road, 4th Floor East
Melville, NY 11747
631.756.8000 • www.h2m.com
NY Architecture & Landscape Architecture: No Certificate Required
NY Engineering Certificate of Authorization No.: 0018178

CONSULTANTS:

MARK	DATE	DESCRIPTION

STATE OF NEW YORK · DANIEL J. AIELLO · 100515 · LICENSED PROFESSIONAL ENGINEER

04/30/2027
Exp. Date

DANIEL J. AIELLO, P.E.
NY PROFESSIONAL ENGINEER Lic. No. 100515

"IN ACCORDANCE WITH ARTICLE 145, SECTION 7209 OF THE NYS EDUCATION LAW, ALTERATION OF THIS DOCUMENT EXCEPT BY A LICENSED PROFESSIONAL IS ILLEGAL"

DESIGNED BY:	DRAWN BY:	CHECKED BY:	REVIEWED BY:
JJN	JJN	DJA	DJA
PROJECT No:	DATE:	SCALE:	
TRFD 2302	FEBRUARY 2025	AS SHOWN	

CLIENT

THIELLS ROSEVILLE FIRE DISTRICT

NEW 26-100 FIRE HEADQUARTERS

65 W RAMAPO ROAD
GARNERVILLE, NY 10923

CONTRACT

CONTRACT G

STATUS

FINAL BID DOCUMENT

SHEET TITLE

STRUCTURAL STEEL DETAILS

DRAWING No.

S 531.00

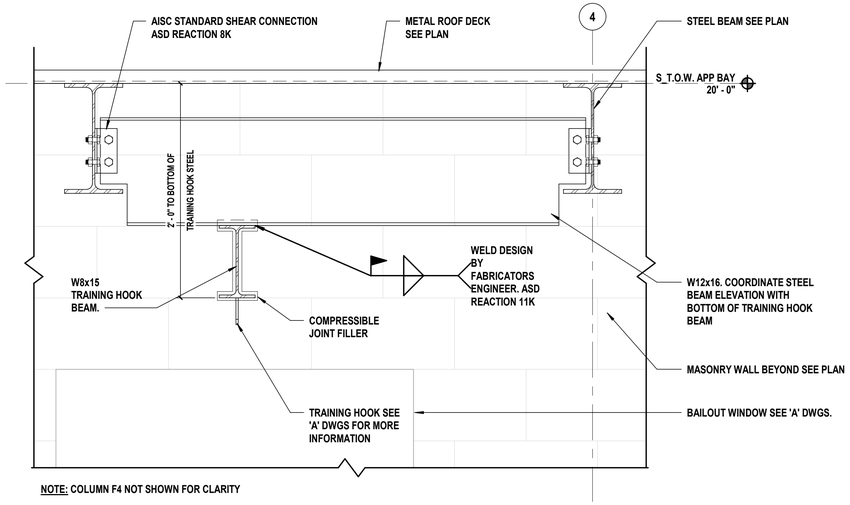

NOTE: COLUMN F4 NOT SHOWN FOR CLARITY

1 Training Hook Steel Section

SCALE: 1 1/2" = 1'-0"

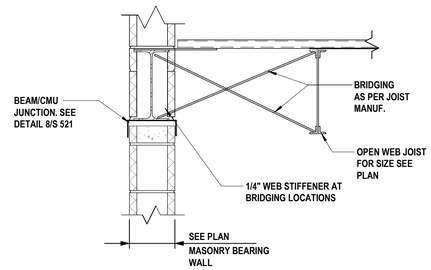

2 Joist Bridging at Spandrel Beam

SCALE: 1 1/2" = 1'-0"

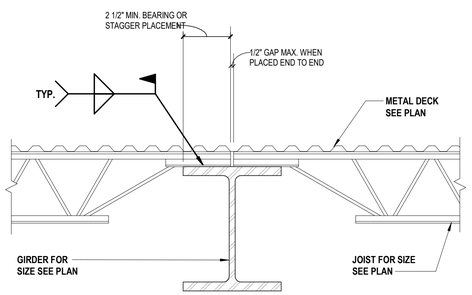

4 Joist Bearing On Steel Girder

SCALE: NTS

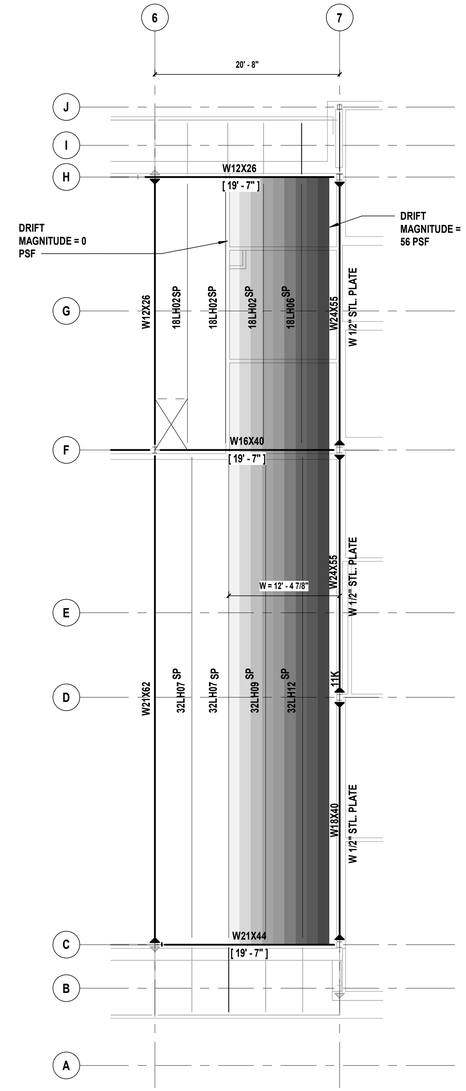

3 Snow Drift Load Plan

SCALE: 1/8" = 1'-0"

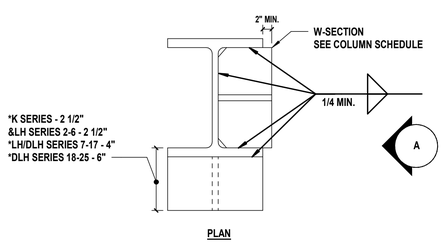

NOTE: SEATS SHOWN HERE SHALL BE DESIGNED BY
THE STEEL CONNECTION DELEGATED DESIGNER

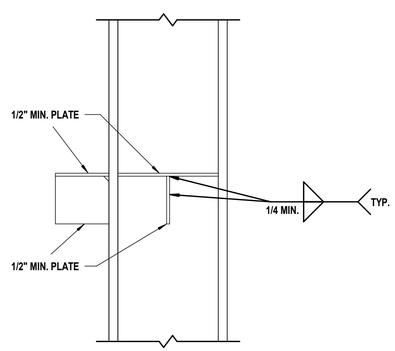

ELEVATION A

5 Typical Joist/Bridging Seat at Steel Column Detail

SCALENTS

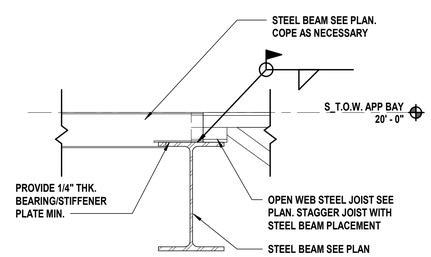

6 Offset Beam/Joist Connection Detail

SCALE: 1" = 1'-0"

H 2 M architects + engineers

538 Broad Hollow Road, 4th Floor East
Melville, NY 11747
631.756.8000 • www.h2m.com
NY Architecture & Landscape Architecture: No Certificate Required
NY Engineering Certificate of Authorization No.: 0018178

CONSULTANTS:

MARK	DATE	DESCRIPTION

STATE OF NEW YORK · DANIEL J. AIELLO · 100515 · LICENSED PROFESSIONAL ENGINEER

04/30/2027
Exp. Date

DANIEL J. AIELLO, P.E.
NY PROFESSIONAL ENGINEER Lic. No. 100515

"IN ACCORDANCE WITH ARTICLE 145, SECTION 7209 OF THE NYS EDUCATION LAW, ALTERATION OF THIS DOCUMENT EXCEPT BY A LICENSED PROFESSIONAL IS ILLEGAL"

DESIGNED BY:	DRAWN BY:	CHECKED BY:	REVIEWED BY:
JJN	JJN	DJA	DJA

PROJECT No:	DATE:	SCALE:
TRFD 2302	FEBRUARY 2025	AS SHOWN

CLIENT

THIELLS ROSEVILLE FIRE DISTRICT

NEW 26-100 FIRE HEADQUARTERS

THIELLS 26 FD

65 W RAMAPO ROAD
GARNERVILLE, NY 10923

CONTRACT

CONTRACT G

STATUS

FINAL BID DOCUMENT

SHEET TITLE

STRUCTURAL STEEL/OPEN WEB STEEL JOIST DETAILS

DRAWING No.

S 532.00

C:\Users\jmeubauer\Documents\TRFD2302_Central23-S_jmeubauer.LCLC5.rvt

2/25/2025 12:05:07 PM

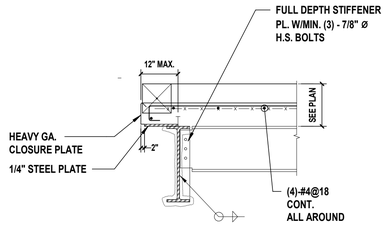

TYPICAL SPANDREL BEAM & PERIMETER REINFORCING

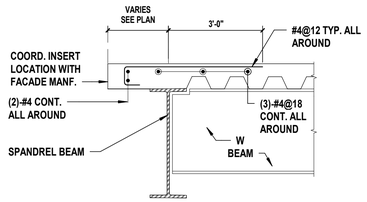

DECK SUPPORT AT PERIMETER

NOTE:
NOTCH IN CONCRETE SLAB IS REQUIRED FOR CURTAIN WALL ANCHORS COORDINATE WITH CURTAIN WALL CONTRACTOR & REINFORCING DETAILS ON THE DRAWINGS.

1 Perimeter Deck Support Details

SCALE: 3/4" = 1'-0"

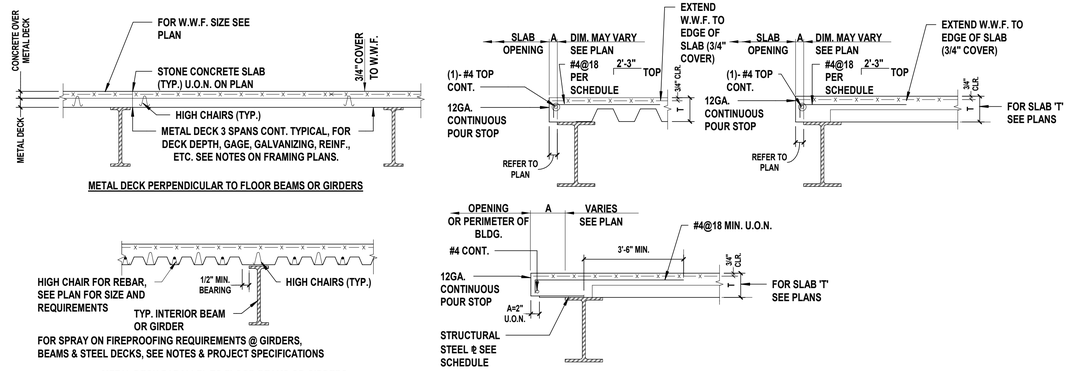

2 Typical Slab Reinforcement/ Pour Stop Details

SCALE:N.T.S.

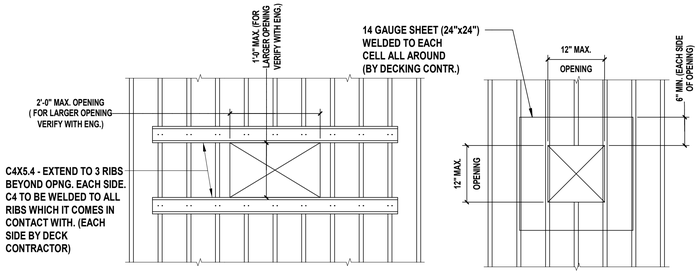

NO REINF. REQUIRED FOR HOLES 6"Ø OR LESS PROVIDE CONCRETE STOP AT ALL OPENINGS

FOR OPENINGS TO 2'-0" PERPENDICULAR TO DECK

NO REINF. REQUIRED WHERE "L" IS 6" OR LESS IN DIRECTION PERPENDICULAR TO DECK

FOR OPENINGS TO 12" PERPENDICULAR TO DECK

TYPICAL FLOOR DETAILS @ OPENINGS

NOTES:
1. FOR OPENING SIZE & LOC. SEE 'A' + MEP DWGS
2. SPACING BETWEEN FLOOR OPENINGS SHOWN TO BE 3'-0" MIN. U.O.N.

3 Typical Floor Details at Openings

SCALE: 3/4" = 1'-0"

END CLOSURE PLATE SCHEDULE

T= UP TO & INCLUDING 6 1/4"		T= OVER 6 1/4", UP TO & INCLUDING 8"		REMARKS
A	GAGE OF PLATE	A	GAGE OF PLATE	
UP TO 4"	14	UP TO 4"	12	--
OVER 4" TO 8"	12	OVER 4" TO 8"	10	FOR A=6" OR GREATER PROVIDE #4@18 TOP
OVER 8" TO 10"	10	OVER 8" TO 12"	1/4" THICK PLATE	PROVIDE #4@18 TOP
10" TO 12"	3/16" THICK PLATE			PROVIDE #4@18 TOP
12" TO 18"	1/4" THICK PLATE			PROVIDE #4@18 TOP

NOTES:
1. CLOSURE TO BEAR 2" ON FLANGE OF BEAM
2. WELD CLOSURE TO TOP FLANGE PER MANUFACTURER'S RECOMMENDATIONS.
3. PROVIDE RETURN LIP AT ALL VERTICAL LEGS, 1" FOR 10 GAGE, 3/4" FOR 12 GAGE, 1/2" FOR 14 GAGE.
4. IF 'A' EXCEEDS DIMENSIONS SHOWN ABOVE, REINFORCE POUR STOP WITH STIFFENERS OR SHORE UP THE EDGE OF SLAB DURING POUR.

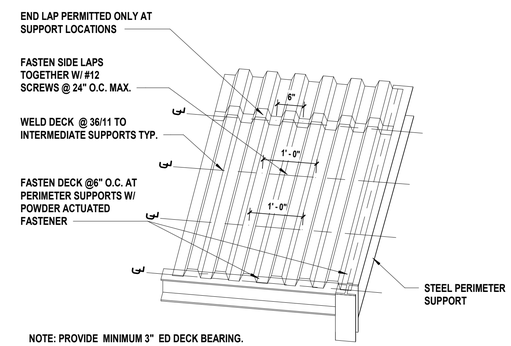

NOTE: PROVIDE MINIMUM 3" ED DECK BEARING.

4 Typical Roof Deck Details

SCALE: N.T.S.

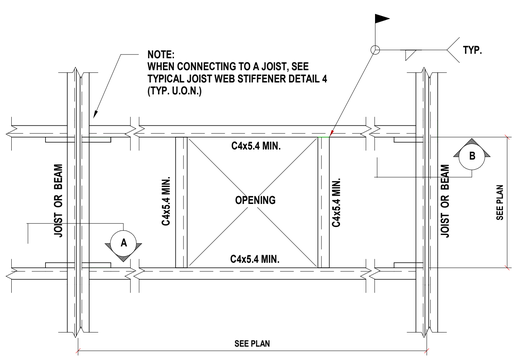

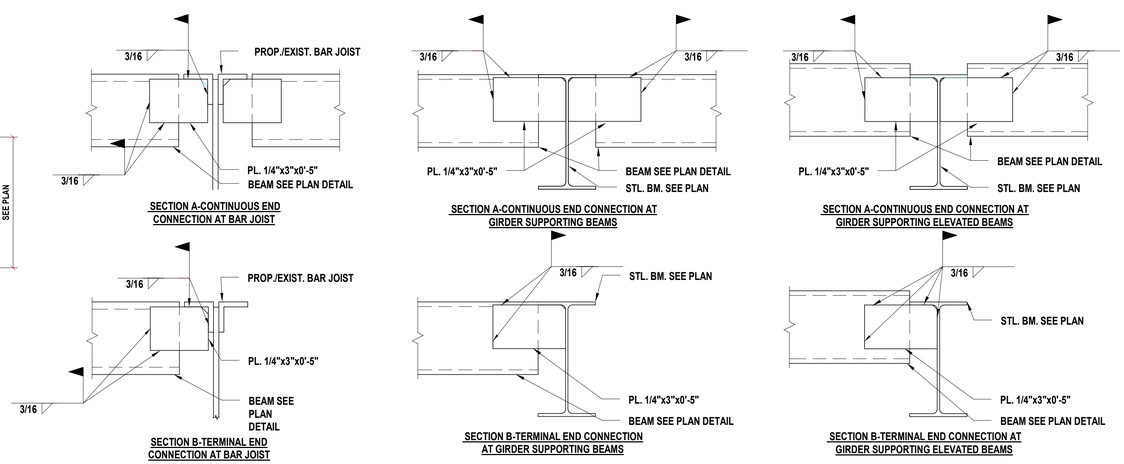

5 Floor Opening/Equipment Support Details

SCALE: 3/4" = 1'-0"

C:\Users\jneubauer\Documents\TRF22302_Central23-S_jneubauer1.CLC5.rvt

2/25/2025 12:05:07 PM

H2M architects + engineers

538 Broad Hollow Road, 4th Floor East
Melville, NY 11747
631.756.8000 • www.h2m.com
NY Architecture & Landscape Architecture: No Certificate Required
NY Engineering Certificate of Authorization No.: 0018178

CONSULTANTS:

MARK	DATE	DESCRIPTION

STATE OF NEW YORK · DANIEL J. AIELLO · 100515 · LICENSED PROFESSIONAL ENGINEER

04/30/2027
Exp. Date

DANIEL J. AIELLO, P.E.
NY PROFESSIONAL ENGINEER Lic. No. 100515

"IN ACCORDANCE WITH ARTICLE 145, SECTION 7209 OF THE NYS EDUCATION LAW, ALTERATION OF THIS DOCUMENT EXCEPT BY A LICENSED PROFESSIONAL IS ILLEGAL"

DESIGNED BY:	DRAWN BY:	CHECKED BY:	REVIEWED BY:
JJN	JJN	DJA	DJA

PROJECT No:	DATE:	SCALE:
TRFD 2302	FEBRUARY 2025	AS SHOWN

CLIENT

THIELLS ROSEVILLE FIRE DISTRICT

NEW 26-100 FIRE HEADQUARTERS

THIELLS 26 FD

65 W RAMAPO ROAD
GARNERVILLE, NY 10923

CONTRACT

CONTRACT G

STATUS

FINAL BID DOCUMENT

SHEET TITLE

METAL DECK DETAILS

DRAWING No.

S 534.00

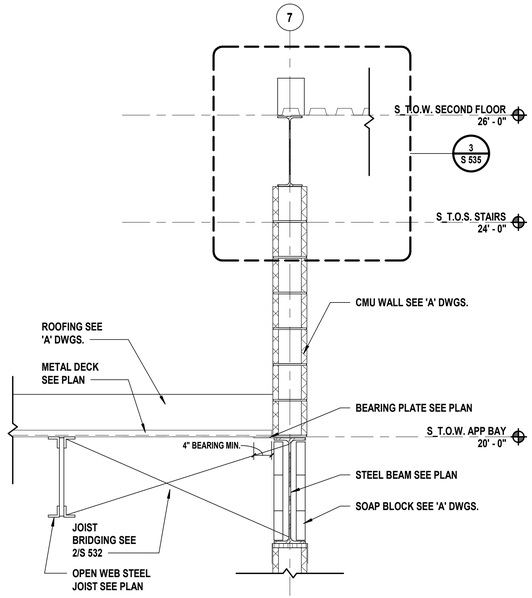

1 Section at Low to High Roof Transition
SCALE: 3/4" = 1'-0"

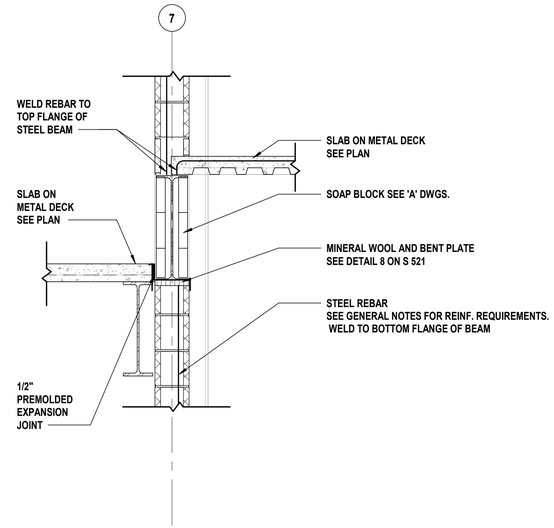

2 Section at Mezzanine/Second Floor Slab Junction
SCALE: 3/4" = 1'-0"

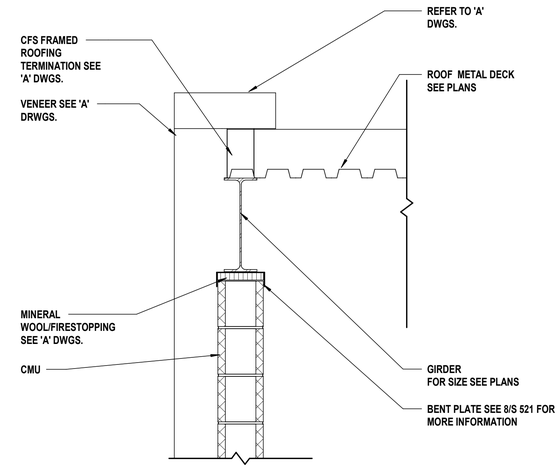

3 Typical High Roof Detail
SCALE: NTS

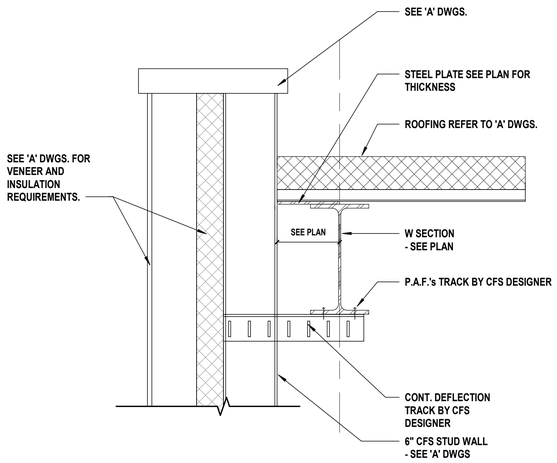

4 Typical CFS Deflection Clip at High Roof
SCALE: NTS

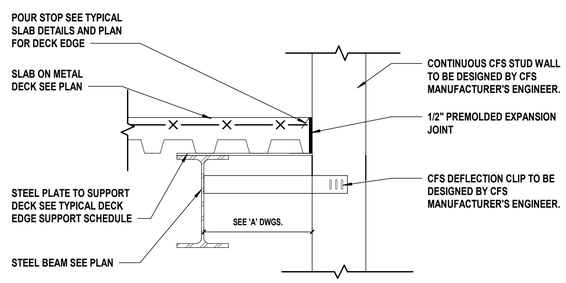

5 Deck Edge at Continuous CFS Stud Detail
SCALENTS

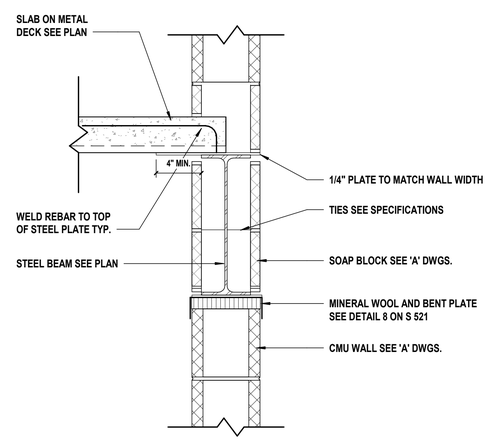

6 Deck Bearing on Steel Beam at Elevator Pit
SCALENTS

H 2 M architects + engineers

538 Broad Hollow Road, 4th Floor East
Melville, NY 11747
631.756.8000 • www.h2m.com
NY Architecture & Landscape Architecture: No Certificate Required
NY Engineering Certificate of Authorization No.: 0018178

CONSULTANTS:

MARK	DATE	DESCRIPTION

STATE OF NEW YORK · DANIEL J. AIELLO · 100515 · LICENSED PROFESSIONAL ENGINEER

04/30/2027
Exp. Date

DANIEL J. AIELLO, P.E.
NY PROFESSIONAL ENGINEER Lic. No. 100515

"IN ACCORDANCE WITH ARTICLE 145, SECTION 7209 OF THE NYS EDUCATION LAW, ALTERATION OF THIS DOCUMENT EXCEPT BY A LICENSED PROFESSIONAL IS ILLEGAL"

DESIGNED BY:	DRAWN BY:	CHECKED BY:	REVIEWED BY:
JJN	JJN	DJA	DJA
PROJECT No:	DATE:	SCALE:	
TRFD 2302	FEBRUARY 2025	AS SHOWN	

CLIENT

THIELLS ROSEVILLE FIRE DISTRICT

NEW 26-100 FIRE HEADQUARTERS

THIELLS 26 FD

65 W RAMAPO ROAD
GARNERVILLE, NY 10923

CONTRACT

CONTRACT G

STATUS

FINAL BID DOCUMENT

SHEET TITLE

METAL DECK BEARING DETAILS

DRAWING No.

S 535.00

C:\Users\jineubauer\Documents\TRFD2302_Central23-S_jineubauer_CLCS.rvt

2/25/2025 12:05:08 PM

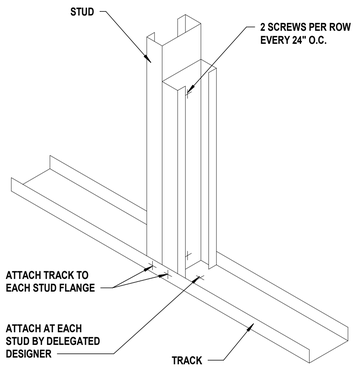

1 **Back-to-Back Studs**
SCALE: NTS

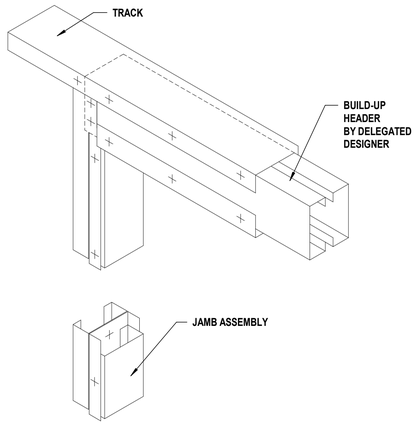

NOTE:
FASTEN BUILT-UP MEMBER TOGETHER AT 12" O.C. MAX

2 **Bearing Header**
SCALE: NTS

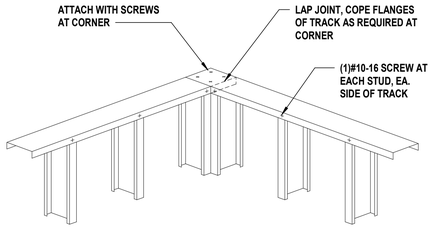

3 **Exterior Corner tie**
SCALE: NTS

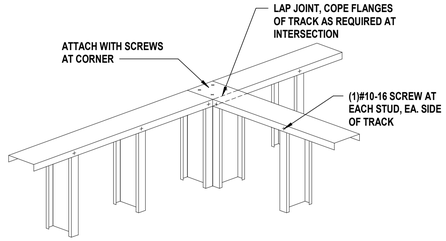

4 **Interior Corner Tie**
SCALE: NTS

H2M architects + engineers

538 Broad Hollow Road, 4th Floor East
Melville, NY 11747
631.756.8000 • www.h2m.com
NY Architecture & Landscape Architecture: No Certificate Required
NY Engineering Certificate of Authorization No.: 0018178

CONSULTANTS:

MARK	DATE	DESCRIPTION

STATE OF NEW YORK
DANIEL J. AIELLO
100515
LICENSED PROFESSIONAL ENGINEER

04/30/2027
Exp. Date

DANIEL J. AIELLO, P.E.
NY PROFESSIONAL ENGINEER Lic. No. 100515

"IN ACCORDANCE WITH ARTICLE 145, SECTION 7209 OF THE NYS EDUCATION LAW, ALTERATION OF THIS DOCUMENT EXCEPT BY A LICENSED PROFESSIONAL IS ILLEGAL"

DESIGNED BY:	DRAWN BY:	CHECKED BY:	REVIEWED BY:
JJN	SRK	JJN	DJA
PROJECT No: TRFD 2302	DATE: FEBRUARY 2025	SCALE: AS SHOWN	

CLIENT

THIELLS ROSEVILLE FIRE DISTRICT

NEW 26-100 FIRE HEADQUARTERS

THIELLS 26 FD

65 W RAMAPO ROAD
GARNERVILLE, NY 10923

CONTRACT

CONTRACT G

STATUS

FINAL BID DOCUMENT

SHEET TITLE

COLD FORMED STEEL DETAILS

DRAWING No.

S 540.00

C:\Users\jneubauer\Documents\TRFD2302_Central23-S_jneubauerLCLC5.rvt

2/25/2025 12:05:08 PM

COLUMN SCHEDULE

COLUMN DESIGNATION	A		B					C						D							E	F								G	H					I				J	
	11	13	7	9	11	13	14	1	2	3	5	6	7	1	7	8	9	11	12	14	14	1	4	5	6	7	10	12	14	14	1	4	5	6	7	7	10	12	14	7	10
HIGH ROOF [26'-0"]																					[27'-6"]								[27'-6"]	[27'-6"]									[26'-0"]		
STAIR ROOF [24'-0"]			[26'-0"]	[26'-0"]	[26'-0"]	[24'-8"]	[26'-0"]						[26'-0"]		[26'-0"]	[26'-0"]			[26'-0"]	[26'-0"]						[26'-0"]	[26'-0"]							[26'-0"]	[26'-0"]	[26'-0"]	[26'-0"]			
LOW ROOF [20'-0"]	[23'-2"]	[24'-0"]						[20'-0"]						[20'-0"]								[20'-0"]	[20'-0"]	[20'-0"]	[20'-0"]						[20'-0"]					[24' - 0"] HSS4x4x1/2				[24'-0"]	[24'-0"]
FINISHED 2nd FLOOR [11'-4"]									[17'-10"]	[17'-10"]	[17'-10"]	[17'-10"]				W8X24																[19'-5"]	[19'-5"]								
MEZZANINE [10'-0"]																[11'-4"]	[11'-4"]	[11'-4"]										[11'-4"]				[18'-9 1/2"]									
FIRST FLOOR [0'-0"]	HSS6x6x5/8	HSS6x6x5/8	W8X24	W8X24	W8X31	HSS5x6x3/8	W8X24	W8X24	W8X31	W8X31	W8X31	W8X31	W8X24	W8X24	W8X24		W8X31	W8X24	W8X31	W8X24	W8X24	W8X35	W8X31	W8X24	W8X24	W8X35	W8X40	W8X24	W8X31	W8X31	W8X31	W8X35	W8X24	W8X24	W8X31		W8X24	W8X24	W8X24	HSS5x6x5/8	HSS6x6x5/8
	[-1' - 0"]	[-0' - 10"]	[-0' - 10"]	[-0' - 10"]	[-0' - 10"]	[-0' - 10"]	[-0' - 10"]	[-0' - 10"]	[-0' - 10"]	[-0' - 10"]	[-0' - 10"]	[-0' - 10"]	[-0' - 10"]	[-0' - 10"]	[-0' - 10"]		[-1' - 0"]	[-1' - 0"]	[-1' - 0"]	[-0' - 10"]	[-0' - 10"]	[-0' - 10"]	[-0' - 10"]	[-0' - 10"]	[-1' - 0"]	[-1' - 0"]	[-0' - 10"]	[-1' - 0"]	[-1' - 0"]	[-0' - 10"]	[-1' - 0"]	[-0' - 10"]	[-0' - 10"]	[-0' - 10"]	[-0' - 10"]	[-0' - 10"]		[-0' - 10"]	[-0' - 10"]	[-0' - 10"]	[0' - 4"]	[-1' - 0"]
BASE PLATE TYPE	BP7	BP8	BP5	BP3	BP3	BP7	BP1	BP2	BP1	BP1	BP1	BP1	BP1	BP2	BP1	-	BP1	BP1	BP1	BP1	BP4	BP2	BP3	BP1	BP1	BP4	BP4	BP1	BP1	BP9	BP2	BP4	BP1	BP4	BP3	-	BP1	BP2	BP10	BP6	BP6

NOTES:

1. INDICATES TOP OF COLUMN/TOP PLATE
2. INDICATES BOTTOM OF BASE PLATE
3. SEE BASE PLATE DETAIL AND SCHEDULE TO DETERMINE BOTTOM OF COLUMN ELEVATION. COORDINATE TOP OF COLUMN ELEVATION WITH ALL CAP PLATE DESIGNS.
4. SEE "FOOTING SCHEDULE" FOR FOOTING SIZE AND REINFORCING.
5. ALL BASE PLATES TO BEAR ON CONCRETE SHALL BE SHIMMED USING 2" NON-METALLIC, NON-SHRINK GROUT.
6. FOR COLUMNS POSTED OFF OF BEAMS SEE 10/S 530 FOR BASEPLATE SIZE AND ATTACHMENT

TENSION DEVELOPMENT LENGTH (Ld) (Inches)

BAR SIZE	Fy = 60,000 PSI CONCRETE: 4000 PSI
#3	15
#4	19
#5	24
#6	29
#7	42
#8	48
#9	54
#10	60
#11	66

TENSION DEVELOPMENT LENGTH (Ld) FOR TOP BAR (Inches)

BAR SIZE	Fy = 60,000 PSI CONCRETE: 4000 PSI
#3	19
#4	25
#5	31
#6	37
#7	54
#8	62
#9	70
#10	78
#11	85

TENSION LAP SPLICE LENGTH (CLASS B MIN.) (Inches)

BAR SIZE	Fy = 60,000 PSI CONCRETE: 4000 PSI
#3	18
#4	24
#5	30
#6	36
#7	52
#8	60
#9	67
#10	75
#11	82

TENSION LAP SPLICE LENGTH FOR TOP BAR (CLASS B MIN.) (Inches)

BAR SIZE	Fy = 60,000 PSI CONCRETE: 4000 PSI
#3	24
#4	31
#5	39
#6	47
#7	68
#8	78
#9	87
#10	97
#11	106

NOTES:
1. REINFORCEMENT IS UNCOATED, WITH Fy=60,000 PSI.
2. CONCRETE IS NORMAL WEIGHT (122-150#/C.F).
3. FOR "TOP" BAR SPLICE LENGTH ("TOP" IS DEFINED BY ACI 318 AS HAVING MORE THAN 12 INCHES OF FRESH CONCRETE CAST BELOW THE BAR), TABULATED LENGTHS HAVE BEEN MULTIPLIED BY 1.3.
4. LENGTHS TABULATED MUST BE MULTIPLIED BY THE FOLLOWING MODIFICATION FACTORS:
   A. LIGHTWEIGHT CONCRETE 1.3
   B. EPOXY-COATED BARS:
      a. BARS WITH COVER <3db, OR WITH CLEAR SPACING <6db ..1.5 FOR BOTTOM & VERTICAL BARS, 1.3 FOR 'TOP' BARS *
      b. ALL OTHER CONDITIONS 1.2
      * FOR EPOXY-COATED 'TOP' BARS THE MAXIMUM FOR COMBINED FACTORS= 1.7
5. WHERE TENSION DEVELOPMENT LENGTH (Ld) IS REQUIRED ON PLANS OR IN DETAILS, SEE TENSION DEVELOPMENT LENGTH TABLES.
6. CLASS A LAP SPLICE LENGTHS ARE EQUAL TO TENSION DEVELOPMENT LENGTHS. SEE TABLES FOR TENSION DEVELOPMENT LENGTHS (Ld). APPLY APPROPRIATE MODIFICATION FACTORS TO CLASS A SPLICE LENGTHS.

1 Concrete Rebar Development Length Tables
SCALE: NTS

MASONRY DEVELOPMENT LENGTH (Ld)

BAR SIZE	Fy = 60,000 PSI F'm = 1500 PSI
#3	9
#4	12
#5	16
#6	29
#7	39
#8	59
#9	74
#10	91
#11	111

NOTES:
1. REINFORCEMENT IS UNCOATED, WITH Fy= 60,000 PSI.
2. NET COMPRESSIVE STRENGTH OF F'M = 1500 PSI.
3. TABULATED LENGTHS HAVE USED "9db" FOR THE SMALLEST "K" VALUE IN DEVELOPMENT LENGTH BARS.
4. FACTORS APPLIED TO LENGTHS ABOVE ARE:
   A. NO. 3 THROUGH NO. 5 BARS = 1.0
   B. NO. 6 THROUGH NO. 7 BARS = 1.3
   C. NO. 8. THROUGH NO. 11 BARS = 1.5
5. LENGTHS TABULATED MUST BE MULTIPLIED BY THE FOLLOWING MODIFICATION FACTORS:
   A. EPOXY-COATED BARS SHALL BE TAKEN AS 150 PERCENT OF LENGTH DETERMINED

2 Masonry Rebar Development Length Tables
SCALE: NTS

H2M architects + engineers
538 Broad Hollow Road, 4th Floor East
Melville, NY 11747
631.756.8000 • www.h2m.com
NY Architecture & Landscape Architecture: No Certificate Required
NY Engineering Certificate of Authorization No.: 0018178

CONSULTANTS:

MARK	DATE	DESCRIPTION

STATE OF NEW YORK · DANIEL J. AIELLO · 100515 · LICENSED PROFESSIONAL ENGINEER

04/30/2027 Exp. Date

DANIEL J. AIELLO, P.E.
NY PROFESSIONAL ENGINEER Lic. No. 100515

"IN ACCORDANCE WITH ARTICLE 145, SECTION 7209 OF THE NYS EDUCATION LAW, ALTERATION OF THIS DOCUMENT EXCEPT BY A LICENSED PROFESSIONAL IS ILLEGAL"

DESIGNED BY:	DRAWN BY:	CHECKED BY:	REVIEWED BY:
JJN	JJN	DJA	DJA

PROJECT No:	DATE:	SCALE:
TRFD 2302	FEBRUARY 2025	AS SHOWN

CLIENT
THIELLS ROSEVILLE FIRE DISTRICT

NEW 26-100 FIRE HEADQUARTERS

THIELLS 26 FD

65 W RAMAPO ROAD GARNERVILLE, NY 10923

CONTRACT
CONTRACT G GENERAL CONSTRUCTION

STATUS
FINAL BID DOCUMENT

SHEET TITLE
COLUMN AND REBAR DEVELOPMENT SCHEDULES

DRAWING No.
S 600.00

C:\Users\jnieubauer\Documents\TRFD2302_Central23-S_jnieubauerLCLC5.rvt
2/25/2025 12:05:08 PM

BASEPLATE SCHEDULE							
BASEPLATE ID	WIDTH, W (in.)	LENGTH, L (in.)	BASEPLATE THICKNESS (in)	COLUMN OFFSET (in.)	ANCHOR BOLT DIA. (in.)	EMBEDMENT (in.)	NOTES
BP1	12	14	3/4	N/A	3/4	12	1
BP2	12	17	1	1 1/2	1	24	1 - 2
BP3	14	18	1 1/4	1	1	24	1 - 2
BP4	16	22	1 1/4	N/A	1 1/4	24	1 - 2
BP5	12	18	3/4	SEE DETAIL	3/4	12	1
BP6	6	14	3/4	N/A	1/2	12	1
BP7	11	11	3/4	N/A	3/4	12	1
BP8	11	11	1	SEE DETAIL	3/4	24	1
BP9	12	14	1	N/A	1	24	1
BP10	20	20	1 3/4	N/A	1 3/4	24	1

NOTES:
1. REFER TO BASEPLATE DETAILS FOR ANCHOR BOLT LOCATIONS
2. GUSSET CONNECTIONS TO BE DESIGNED BY STEEL FABRICATOR'S ENGINEER

LINTEL SCHEDULE

MARK	SIZE	DETAILS	COMMENTS
LL-1	W16X26 & L3 1/2x3 1/2 x 5/16 W/ 1/4" THK. STEEL PLATE. WIDTH OF PLATE TO MATCH WIDTH OF WALL SEE 'A' DWGS FOR WALL PROFILES		NOTES 1-4
LL-2	(2) L4x3 1/2x 5/16 & L3 1/2x3 1/2 x 5/16 W/ 1/4" THK. STEEL PLATE. WIDTH OF PLATE TO MATCH WIDTH OF WALL SEE 'A' DWGS FOR WALL PROFILES		NOTES 1-5
LL-3	(2) L3 1/2x3 1/2x 5/16 & L3 1/2x3 1/2 x 5/16 W/ 1/4" THK. STEEL PLATE. WIDTH OF PLATE TO MATCH WIDTH OF WALL SEE 'A' DWGS FOR WALL PROFILES		NOTES 1-5
LL-4	(2) L3 1/2x3 1/2x 5/16		NOTES 1-5
LL-5	W8x10		NOTES 1-4
LL-6	(2) L4vx3 1/2x 5/16		NOTES 1-5

NOTES:
1. LINTEL LENGTH SHALL BE M.O. + 1'-4" TO PROVIDE MIN. BEARING OF 8" ONTO SOLID MASONRY ON EACH SIDE.
2. ALL EXTERIOR LINTELS TO BE SHOP APPLIED HOT DIPPED GALVANIZED.
3. WELD VERTICAL REINFORCEMENT INTERRUPTED BY MASONRY OPENINGS TO TOP OF THE STEEL LINTELS, TYPICAL.
4. REFER TO ARCHITECTURAL FLOOR PLANS AND ELEVATIONS FOR LINTEL LOCATIONS.
5. VERTICAL LEGS OF DOUBLE ANGLES SHALL BE WELDED TOGETHER.

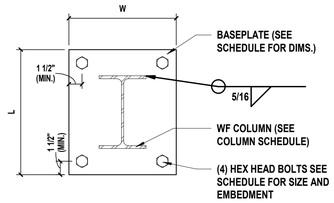

1 Baseplate BP1, BP9
SCALE: NTS

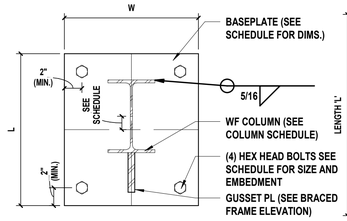

NOTE: DETAIL APPLIES WHERE GUSSET IS ATTACHED TO COLUMN WEB AS WELL. APPLY OFFSET IN PLANE OF BRACE

2 Baseplate BP2,BP3
SCALE: NTS

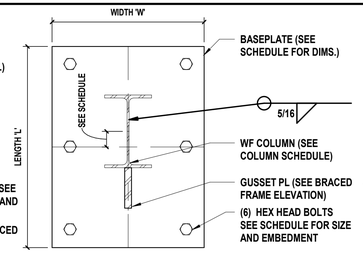

NOTE: DETAIL APPLIES WHERE GUSSET IS ATTACHED TO COLUMN WEB AS WELL. APPLY OFFSET IN PLANE OF BRACE

3 Baseplate BP4
SCALE: NTS

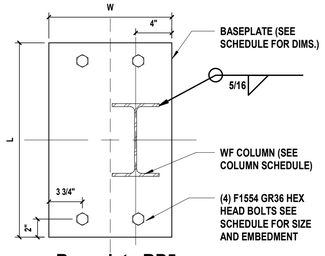

4 Baseplate BP5
SCALE: 1 1/2" = 1'-0"

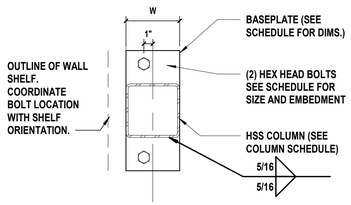

5 Baseplate BP6
SCALE: 1 1/2" = 1'-0"

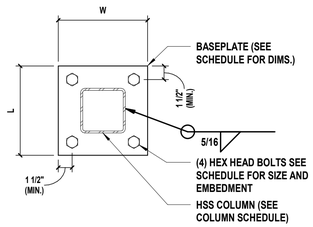

6 Baseplate BP7
SCALE: NTS

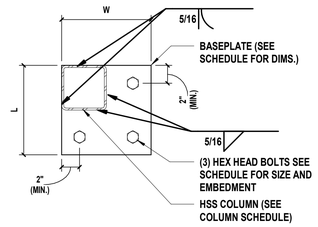

7 Baseplate BP8
SCALE: NTS

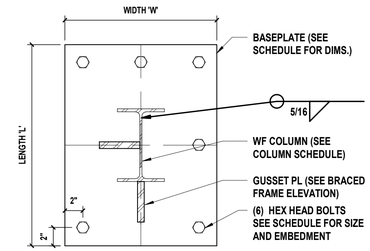

8 Baseplate BP10
SCALE: NTS

H2M architects + engineers
538 Broad Hollow Road, 4th Floor East
Melville, NY 11747
631.756.8000 • www.h2m.com
NY Architecture & Landscape Architecture: No Certificate Required
NY Engineering Certificate of Authorization No.: 0018178

CONSULTANTS:

MARK	DATE	DESCRIPTION

STATE OF NEW YORK · DANIEL J. AIELLO · 100515 · LICENSED PROFESSIONAL ENGINEER

04/30/2027
Exp. Date

DANIEL J. AIELLO, P.E.
NY PROFESSIONAL ENGINEER Lic. No. 100515

"IN ACCORDANCE WITH ARTICLE 145, SECTION 7209 OF THE NYS EDUCATION LAW, ALTERATION OF THIS DOCUMENT EXCEPT BY A LICENSED PROFESSIONAL IS ILLEGAL"

DESIGNED BY:	DRAWN BY:	CHECKED BY:	REVIEWED BY:
JJN	SRK	DJA	DJA

PROJECT No:	DATE:	SCALE:
TRFD 2302	FEBRUARY 2025	AS SHOWN

CLIENT

THIELLS ROSEVILLE FIRE DISTRICT

NEW 26-100 FIRE HEADQUARTERS

65 W RAMAPO ROAD
GARNERVILLE, NY 10923

CONTRACT

CONTRACT G

STATUS

FINAL BID DOCUMENT

SHEET TITLE

BASEPLATE SCHEDULE AND DETAILS

DRAWING No.

S 601.00

C:\Users\jneubauer\Documents\TRFD2302_Central23-S_jneubauerLCLC5.rvt
2/25/2025 12:05:09 PM

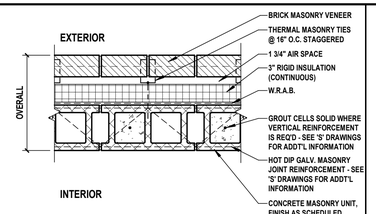

NOTES:
1. MASONRY ANCHORS TO BE #345-SV BY 'HB' (OR APPROVED EQUAL) @ 16" O.C. STAGGERED.
2. REFER TO WALL SECTIONS & ELEVATIONS FOR PRECAST CONCRETE BANDING LOCATIONS, SIZES AND DETAILS.

WALL TYPE	OVERALL DIMENSIONS	CMU SIZE	STUD SIZE	FIRE RATING	UL No.	STC RATING	COMMENTS
1A	1'- 4"	7 5/8"	-	-	-	-	-
-	-	-	-	-	-	-	-
-	-	-	-	-	-	-	-

1 Masonry Veneer
Exterior Partition

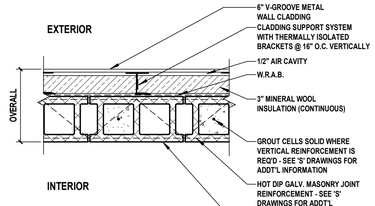

NOTES:
1. FASTEN BRACKETS TO CMU WITH 3/16" DIA. FLANGED HEX HEAD TAPCON SCREW OR APPROVED EQUAL @ 16" O.C. (VERT.) MIN.

WALL TYPE	OVERALL DIMENSIONS	CMU SIZE	STUD SIZE	FIRE RATING	UL No.	STC RATING	COMMENTS
2A	11 5/8"	7 5/8"	-	-	-	-	FINISH AS SCHEDULED
-	-	-	-	-	-	-	-
-	-	-	-	-	-	-	-

2 CMU w/ Aluminum Siding
Exterior Partition

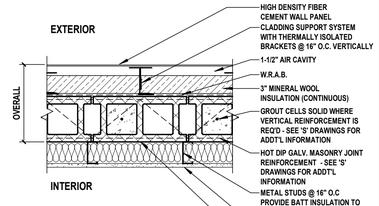

NOTES:
1. FASTEN BRACKETS TO CMU WITH 3/16" DIA. FLANGED HEX HEAD TAPCON SCREW OR APPROVED EQUAL @ 16" O.C. (VERT.) MIN.

WALL TYPE	OVERALL DIMENSIONS	CMU SIZE	STUD SIZE	FIRE RATING	UL No.	STC RATING	COMMENTS
3A	16 3/4"	7 5/8"	3 5/8"	-	-	-	FINISH AS SCHEDULED
-	-	-	-	-	-	-	-
-	-	-	-	-	-	-	-

3 CMU w/ Fiber Cement Panels
Exterior Partition

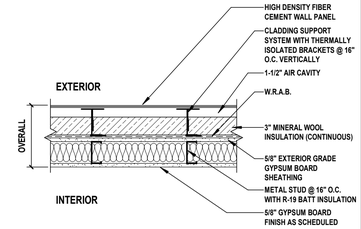

WALL TYPE	OVERALL DIMENSIONS	STUD SIZE	FIRE RATING	UL No.	STC RATING	COMMENTS
4A	12 1/8"	6"	-	-	-	-
-	-	-	-	-	-	-
-	-	-	-	-	-	-

4 Metal Stud w/ Fiber Cement Panels
Exterior Partition

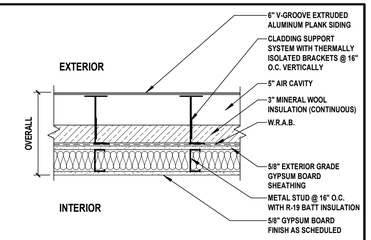

WALL TYPE	OVERALL DIMENSIONS	STUD SIZE	FIRE RATING	UL No.	STC RATING	COMMENTS
5A	15 3/4"	6"	-	-	-	-
-	-	-	-	-	-	-
-	-	-	-	-	-	-

5 Metal Stud w/ Aluminum Siding
Exterior Partition

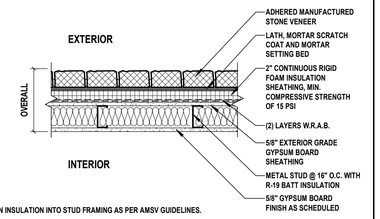

NOTES:
1. FASTEN INSULATION INTO STUD FRAMING AS PER AMSV GUIDELINES.

WALL TYPE	OVERALL DIMENSIONS	STUD SIZE	FIRE RATING	UL No.	STC RATING	COMMENTS
6A	11 1/4"	6"	-	-	-	-
-	-	-	-	-	-	-
-	-	-	-	-	-	-

6 Metal Stud w/ Stone Veneer
Exterior Partition

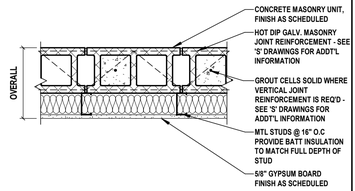

NOTE:
1. REFER TO CODE COMPLIANCE PLAN FOR ADDITIONAL INFORMATION ON FIRE RATED WALL LOCATIONS. ALL PENETRATIONS IN FIRE RATED PARTITIONS SHALL BE FIRESTOPPED.

WALL TYPE	OVERALL DIMENSIONS	CMU SIZE	STUD SIZE	FIRE RATING	UL No.	STC RATING	COMMENTS
7A	11 7/8"	7 5/8"	3 5/8"	-	-	-	-
7B	11 7/8"	7 5/8"	3 5/8"	1HR	U905	-	-
-	-	-	-	-	-	-	-

7 CMU w/ Metal Stud
Interior Partition

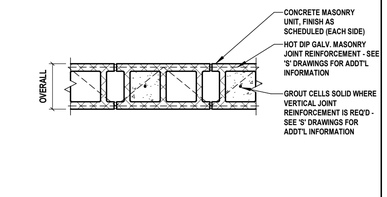

NOTE:
1. REFER TO CODE COMPLIANCE PLAN FOR ADDITIONAL INFORMATION ON FIRE RATED WALL LOCATIONS. ALL PENETRATIONS IN FIRE RATED PARTITIONS SHALL BE FIRESTOPPED.

WALL TYPE	OVERALL DIMENSIONS	STUD SIZE	FIRE RATING	UL No.	STC RATING	COMMENTS
8A	7 5/8"	7 5/8"	1HR	U906	-	-
8B	7 5/8"	7 5/8"	-	-	-	-
8C	5 5/8"	5 5/8"	-	-	-	-

8 CMU Partition
Interior Partition

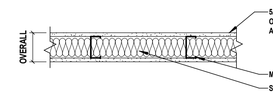

WALL TYPE	OVERALL DIMENSIONS	STUD SIZE	FIRE RATING	UL No.	STC RATING	COMMENTS
9A	4 7/8"	3 5/8"	-	-	-	-
9B	7 1/4"	6"	-	-	-	-
9C	3 3/4"	2 1/2"	-	-	-	-

9 Metal Stud Partition
Interior Partition

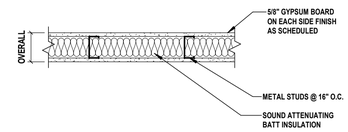

NOTE:
1. REFER TO CODE COMPLIANCE PLAN FOR ADDITIONAL INFORMATION ON FIRE RATED WALL LOCATIONS. ALL PENETRATIONS IN FIRE RATED PARTITIONS SHALL BE FIRESTOPPED.

WALL TYPE	OVERALL DIMENSIONS	STUD SIZE	FIRE RATING	UL No.	STC RATING	COMMENTS
10A	4 7/8"	3 5/8"	1HR	U419	54	-
10B	7 1/4"	6"	1 HR	U419	-	-
-	-	-	-	-	-	-

10 1 HR Metal Stud Partition
Interior Partition

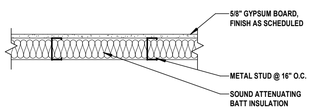

WALL TYPE	OVERALL DIMENSIONS	STUD SIZE	FIRE RATING	UL No.	STC RATING	COMMENTS
11A	4 1/4"	3 5/8"	-	-	-	-
11B	6 5/8"	6"	-	-	-	-
-	-	-	-	-	-	-

11 Metal Stud Partition
Interior Partition

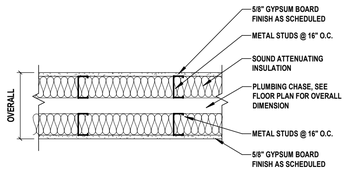

WALL TYPE	OVERALL DIMENSIONS	STUD SIZE	FIRE RATING	UL No.	STC RATING	COMMENTS
12A	-	3 5/8"	-	-	-	-
-	-	-	-	-	-	-
-	-	-	-	-	-	-

12 Metal Stud Chase Wall
Interior Partition

C:\Users\akaled\Documents\TRFD2302_Central23-A_AKaled.rvt

2/25/2025 4:06:03 PM

H 2 M architects + engineers

538 Broad Hollow Road, 4th Floor East
Melville, NY 11747
631.756.8000 • www.h2m.com
NY Architecture & Landscape Architecture: No Certificate Required
NY Engineering Certificate of Authorization No.: 0018178

CONSULTANTS:

MARK	DATE	DESCRIPTION

REGISTERED ARCHITECT PATRICK O. STONE 039654 STATE OF NEW YORK

10/31/2025
Exp. Date

PATRICK O. STONE, R.A.
NY PROFESSIONAL ARCHITECT Lic. No. 039654

"IN ACCORDANCE WITH ARTICLE 145, SECTION 7209 OF THE NYS EDUCATION LAW, ALTERATION OF THIS DOCUMENT EXCEPT BY A LICENSED PROFESSIONAL IS ILLEGAL."

DESIGNED BY:	DRAWN BY:	CHECKED BY:	REVIEWED BY:
DBS/RLG	ANK	DBS	POS

PROJECT No:	DATE:	SCALE:
TRFD 2302	FEBRUARY 2025	AS SHOWN

CLIENT

THIELLS ROSEVILLE FIRE DISTRICT

NEW 26-100 FIRE HEADQUARTERS

65 W RAMAPO ROAD
GARNERVILLE, NY 10923

CONTRACT

CONTRACT G
GENERAL CONSTRUCTION

STATUS

FINAL BID DOCUMENT

SHEET TITLE

PARTITION TYPES

DRAWING No.

A 000.00

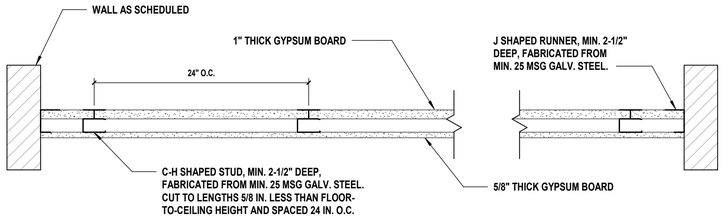

HORIZONTAL SECTION

1 HOUR MIN. FIRE RATED CEILING UL: U417

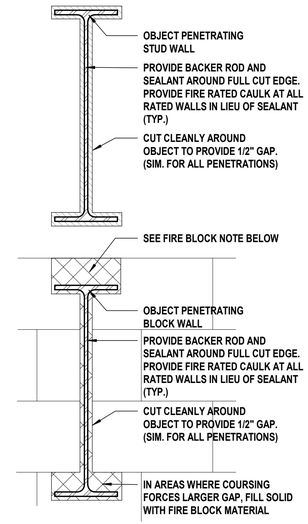

NOTE:
THESE DETAILS APPLY TO ALL PENETRATING ITEMS INCLUDING BEAMS, JOISTS, ANGLES, DUCTS, PIPES, CONDUIT, ETC. BEAMS ARE SHOWN FOR ILLUSTRATIVE PURPOSES ONLY.

TYPICAL HORIZONTAL PENETRATIONS AT WALLS

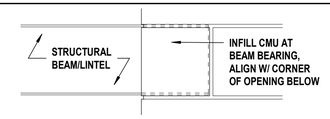

TYPICAL INFILL AT EXPOSED BEAM/ LINTEL BEARING

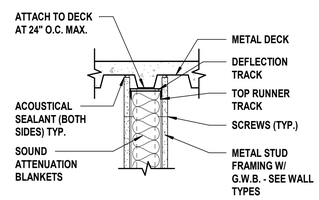

TYPICAL TOP OF WALL STUD FRAMING TO UNDERSIDE OF FLOOR OR ROOF DECKING WITH SOUND ATTENUATION BLANKETS

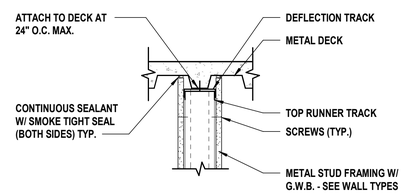

TYPICAL TOP OF STUD WALL FRAMING TO UNDERSIDE OF FLOOR OR ROOF DECKING @ NON-RATED PARTITIONS

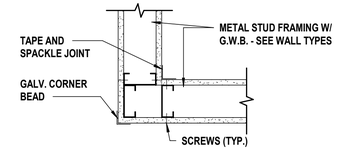

NOTE:
TYPICAL CORNER DETAIL OCCURS AT THE FOLLOWING LOCATIONS:
1. INTERSECTION AT NON-RATED PARTITIONS.
2. INTERSECTION AT RATED PARTITIONS.

TYPICAL STUD WALL CORNER DETAIL

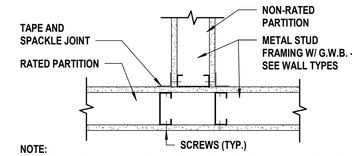

NOTE:
TYPICAL "T" INTERSECTION DETAIL OCCURS AT THE FOLLOWING LOCATIONS:
1. INTERSECTION AT A NON-RATED PARTITION AND A RATED PARTITION.

TYPICAL STUD WALL (NON-RATED INTERSECTION WITH A RATED PARTITION)

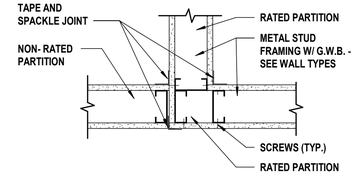

TYPICAL STUD WALL (RATED PARTITION CORNER INTERSECTION WITH A NON-RATED PARTITION)

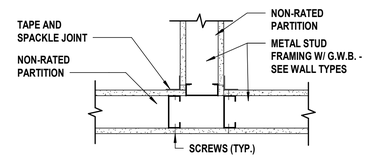

TYPICAL STUD WALL INTERSECTION @ NON-RATED PARTITIONS

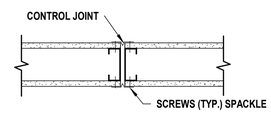

TYPICAL CONTROL JOINT @ STUD WALL

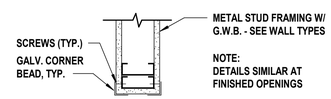

NOTE:
DETAILS SIMILAR AT FINISHED OPENINGS

TYPICAL STUD WALL END CONDITION

H 2 M architects + engineers

538 Broad Hollow Road, 4th Floor East
Melville, NY 11747
631.756.8000 • www.h2m.com
NY Architecture & Landscape Architecture: No Certificate Required
NY Engineering Certificate of Authorization No.: 0018178

CONSULTANTS:

MARK	DATE	DESCRIPTION

REGISTERED ARCHITECT PATRICK O. STONE STATE OF NEW YORK 039654

10/31/2025
Exp. Date

PATRICK O. STONE, R.A.
NY PROFESSIONAL ARCHITECT Lic. No. 039654

"IN ACCORDANCE WITH ARTICLE 145, SECTION 7209 OF THE NYS EDUCATION LAW, ALTERATION OF THIS DOCUMENT EXCEPT BY A LICENSED PROFESSIONAL IS ILLEGAL"

DESIGNED BY:	DRAWN BY:	CHECKED BY:	REVIEWED BY:
DBS/RLG	ANK	DBS	POS
PROJECT No: TRFD 2302	DATE: FEBRUARY 2025	SCALE: AS SHOWN	

CLIENT

THIELLS ROSEVILLE FIRE DISTRICT

NEW 26-100 FIRE HEADQUARTERS

65 W RAMAPO ROAD
GARNERVILLE, NY 10923

CONTRACT

CONTRACT G
GENERAL CONSTRUCTION

STATUS

FINAL BID DOCUMENT

SHEET TITLE

UL ASSEMBLIES

DRAWING No.

A 001.00

C:\Users\ankel\Documents\TRFD2302_Central23-A_AKalled.rvt

2/25/2025 4:06:03 PM

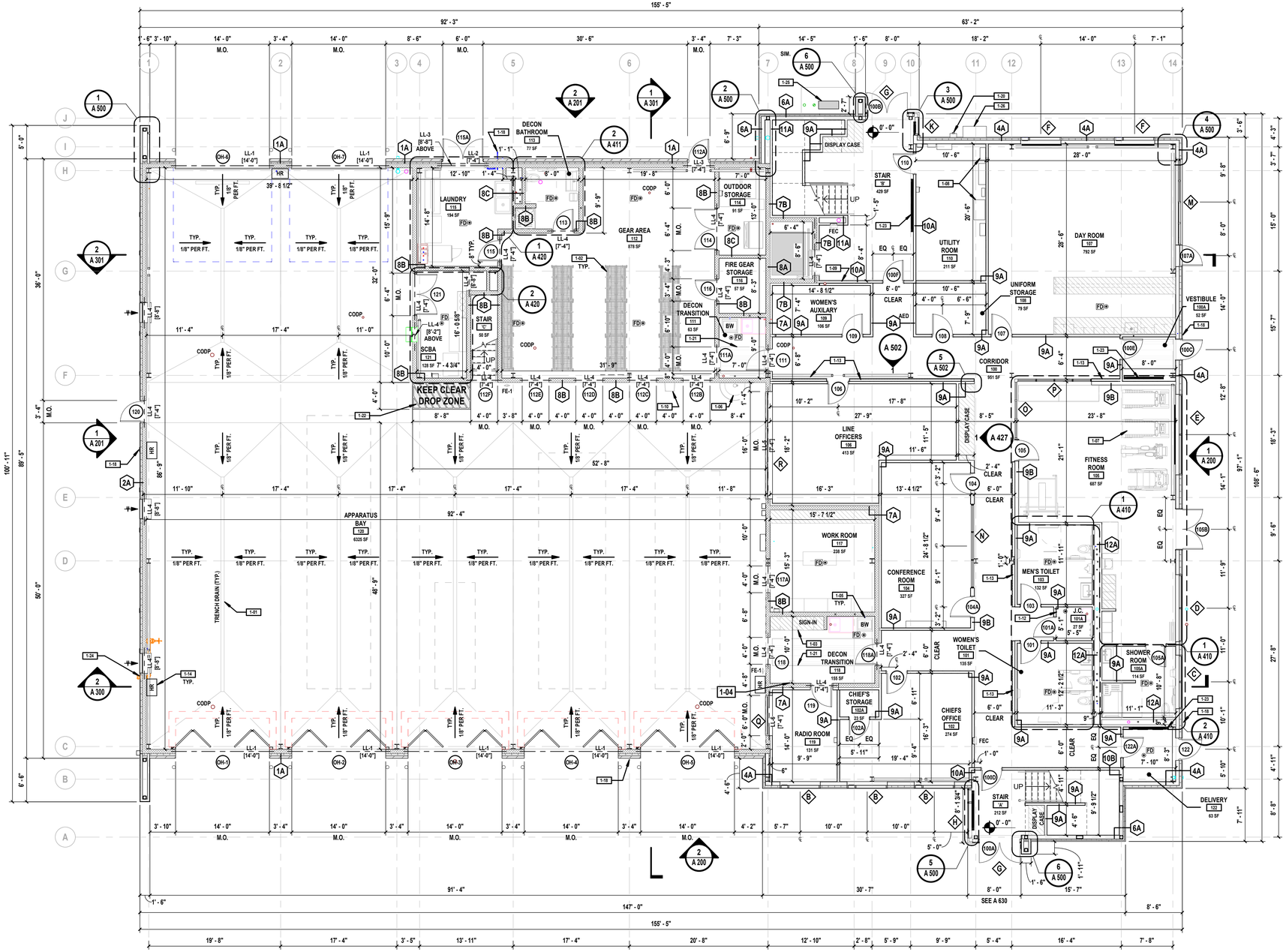

1 **First Floor Plan**
SCALE: 1/8" = 1'-0"

GENERAL FLOOR PLAN NOTES

1. COORDINATE THE WORK INDICATED HERE WITH ALL CONTRACT DOCUMENTS AND SPECIFICATIONS.
2. ALL DIMENSIONS ARE TO FACE OF ROUGH STUD OR CONCRETE MASONRY UNIT (STRUCTURE), UNLESS NOTED OTHERWISE.
3. ALL DOORS IN STUD WALLS SHALL BE EITHER CENTERED ON WALLS OR 4" FROM WALL TO ROUGH JAMB, UNLESS NOTED OTHERWISE.
4. PROVIDE SADDLES WHERE INDICATED AT ROOM TRANSITIONS AS NOTED IN DOOR SCHEDULE. SADDLES TO BE FULL WIDTH OF OPENING. (SEE DOOR SADDLE DETAILS FOR ADDITIONAL INFORMATION).
5. ALL PAINTING SHALL BE PERFORMED IN ACCORDANCE WITH REQUIREMENTS CONTAINED IN SECTION 099000 OF PROJECT MANUAL.
6. REFER TO A 400 SERIES ENLARGED FLOOR PLANS, DETAILS, EQUIPMENT SCHEDULES AND ALL OTHER CONTRACT DOCUMENTS AND SPECIFICATIONS FOR ADDITIONAL FRAMING INFORMATION.
7. FOR ALL LINTELS DENOTED AS LL-#, SEE LINTEL SCHEDULE AND 'S' DRAWINGS FOR ADDITIONAL INFORMATION. ALL ELEVATIONS DENOTED [X'-X"] ARE TAKEN FROM ABOVE FINISH FLOOR (A.F.F.).
8. FOR DOORS DENOTED ⊖, REFER TO DOOR SCHEDULE FOR ADDITIONAL INFORMATION.
9. FOR WINDOWS DENOTED ◇, REFER TO WINDOW SCHEDULE FOR ADDITIONAL INFORMATION.
10. CONTRACT 'G' IS REQUIRED TO COORDINATE WITH ALL OTHER CONTRACTS AND ACCOMMODATE CONSTRUCTION TO ACCEPT ALL PIPING, CONDUITS, EQUIPMENT, ETC., EITHER SPECIFIED OR DETAILED TO BE RECESSED OR CONCEALED IN WALLS AS REQUIRED.
11. ALL EXPOSED CORNERS OF CONCRETE MASONRY UNIT WALL CONSTRUCTION SHALL HAVE BULLNOSE EDGE. SEE DETAILS ON A 500 SERIES DRAWINGS FOR ADDITIONAL INFORMATION.

FLOOR PLAN LEGEND

FD	NEW FLOOR DRAIN, PITCH FLOOR FOR POSITIVE DRAINAGE - COORDINATE WITH CONTRACT 'P'
CODP	NEW FLOOR CLEAN OUT - COORDINATE WITH CONTRACT 'P'
FEC	RECESSED FIRE EXTINGUISHER CABINET, REFER TO SPECIFICATIONS
FE-1	SURFACE MOUNTED FIRE EXTINGUISHER, REFER TO SPECIFICATIONS

FIRST FLOOR CONSTRUCTION KEYNOTE LEGEND

KEYNOTE	DESCRIPTION
1-01	RECESSED TRENCH DRAIN WITH CAST IRON GRATING. TRENCH DRAINAGE SHALL BE PROVIDED BY CONTRACT 'P' AND INSTALLED BY CONTRACT 'G' WHEN APPARATUS BAY SLAB ON GRADE IS INSTALLED. SEE DETAIL 3/S 510.
1-02	GEAR LOCKERS PROVIDED BY OWNER, INSTALLED BY CONTRACT 'G'.
1-03	POWDER COATED STEEL CASEWORK BY CONTRACT 'G', SEE INTERIOR ELEVATIONS FOR ADDT'L INFO.
1-04	SURFACE MOUNTED HAND SANITIZER PROVIDED AND INSTALLED BY CONTRACT 'G', FINAL LOCATIONS TO BE DETERMINED IN FIELD WITH OWNER/ARCHITECT.
1-05	BOOT WASH STATION. PROVIDED AND INSTALLED BY CONTRACT 'G'.
1-06	WASHFOUNTAIN PROVIDED AND INSTALLED BY CONTRACT 'P', REFER TO 'P' DRAWINGS.
1-07	FITNESS EQUIPMENT PROVIDED BY OWNER. COORDINATE WITH OWNER VENDOR FOR FINAL INSTALLATION.
1-08	ELECTRICAL SERVICE CABINETS, COORDINATE WITH CONTRACT 'E' FOR INSTALLATION.
1-09	CONTRACTOR TO CONSTRUCT 1-HR RATED WALL (10A) PRIOR TO CONSTRUCTION OF 7B FURRED WALL. 1-HR RATING INTEGRITY TO BE MAINTAINED FOR STAIR ENCLOSURE.
1-10	EMERGENCY EYE WASH STATION PROVIDED AND INSTALLED BY CONTRACT 'G'.
1-11	ALUMINUM FRAMED TACKBOARD PROVIDED BY CONTRACT 'G', SEE INTERIOR ELEVATION FOR SIZE.
1-12	ALL WALLS IN J.C. TO BE FINISHED WITH FRP PROTECTION PANELS, 54" HIGH. TYP. AT ALL J.C., REFER TO FINISH SCHEDULE.
1-13	INTERIOR WALL PANEL WITH LIGHT COVE, REFER TO DETAILS FOR ADDITIONAL INFORMATION. COORDINATE LIGHT COVE WITH CONTRACT 'E'.
1-14	HOSE REEL, PROVIDED AND INSTALLED BY CONTRACT 'P'. REFER TO 'P' DRAWINGS FOR ADDITIONAL INFORMATION.
1-16	ELECTRICAL PANEL BY CONTRACT 'E', REFER TO 'E' DRAWINGS.
1-17	INCOMING GAS SERVICE, CONTRACT 'G' TO COORDINATE INSTALLATION AND SEQUENCING WITH CONTRACT 'P'.
1-18	FROST PROOF HOSE BIB, COORDINATE WITH CONTRACT 'P'.
1-20	ELECTRICAL METER AND INCOMING SERVICE, COORDINATE FINAL INSTALLATION AND SEQUENCING WITH CONTRACT 'E'.
1-21	RECESSED WALK OFF MAT PROVIDED BY CONTRACT 'G'.
1-22	PROVIDE STRIPED AREA WITH CHEVRON CROSS HATCH IN SAFETY YELLOW PAINT DIRECTLY BELOW TRAINING AREA.
1-23	ELECTRIC BASEBOARD HEATER, COORDINATE INSTALLATION WITH CONTRACT 'M'.
1-24	FIRE DEPARTMENT CONNECTION, REFER TO FIRE PROTECTION DRAWINGS.
1-25	GAS METER RIG ON POURED CONCRETE PAD BY CONTRACT 'P'.
1-26	CURRENT TRANSFORMER (CT) CABINET BY CONTRACT 'E'.

H2M architects + engineers
538 Broad Hollow Road, 4th Floor East
Melville, NY 11747
631.756.8000 • www.h2m.com
NY Architecture & Landscape Architecture: No Certificate Required
NY Engineering Certificate of Authorization No.: 0018178

CONSULTANTS:

MARK	DATE	DESCRIPTION

REGISTERED ARCHITECT PATRICK O. STONE 0396654 STATE OF NEW YORK

10/31/2025
Exp. Date

PATRICK O. STONE, R.A.
NY PROFESSIONAL ARCHITECT Lic. No. 036654

"IN ACCORDANCE WITH ARTICLE 145, SECTION 7209 OF THE NYS EDUCATION LAW, ALTERATION OF THIS DOCUMENT EXCEPT BY A LICENSED PROFESSIONAL IS ILLEGAL."

DESIGNED BY:	DRAWN BY:	CHECKED BY:	REVIEWED BY:
DBS/RLG	ANK	DBS	POS
PROJECT No: TRFD 2302	DATE: FEBRUARY 2025	SCALE: AS SHOWN	

CLIENT

THIELLS ROSEVILLE FIRE DISTRICT

NEW 26-100 FIRE HEADQUARTERS

THIELLS 26 FD

65 W RAMAPO ROAD
GARNERVILLE, NY 10923

CONTRACT

CONTRACT G
GENERAL CONSTRUCTION

STATUS

FINAL BID DOCUMENT

SHEET TITLE

FLOOR PLAN - FIRST FLOOR

DRAWING No.

A 101.00

C:\Users\ankel\Documents\TRFD2302_Central23-A_AKalled.rvt

2/25/2025 4:06:18 PM

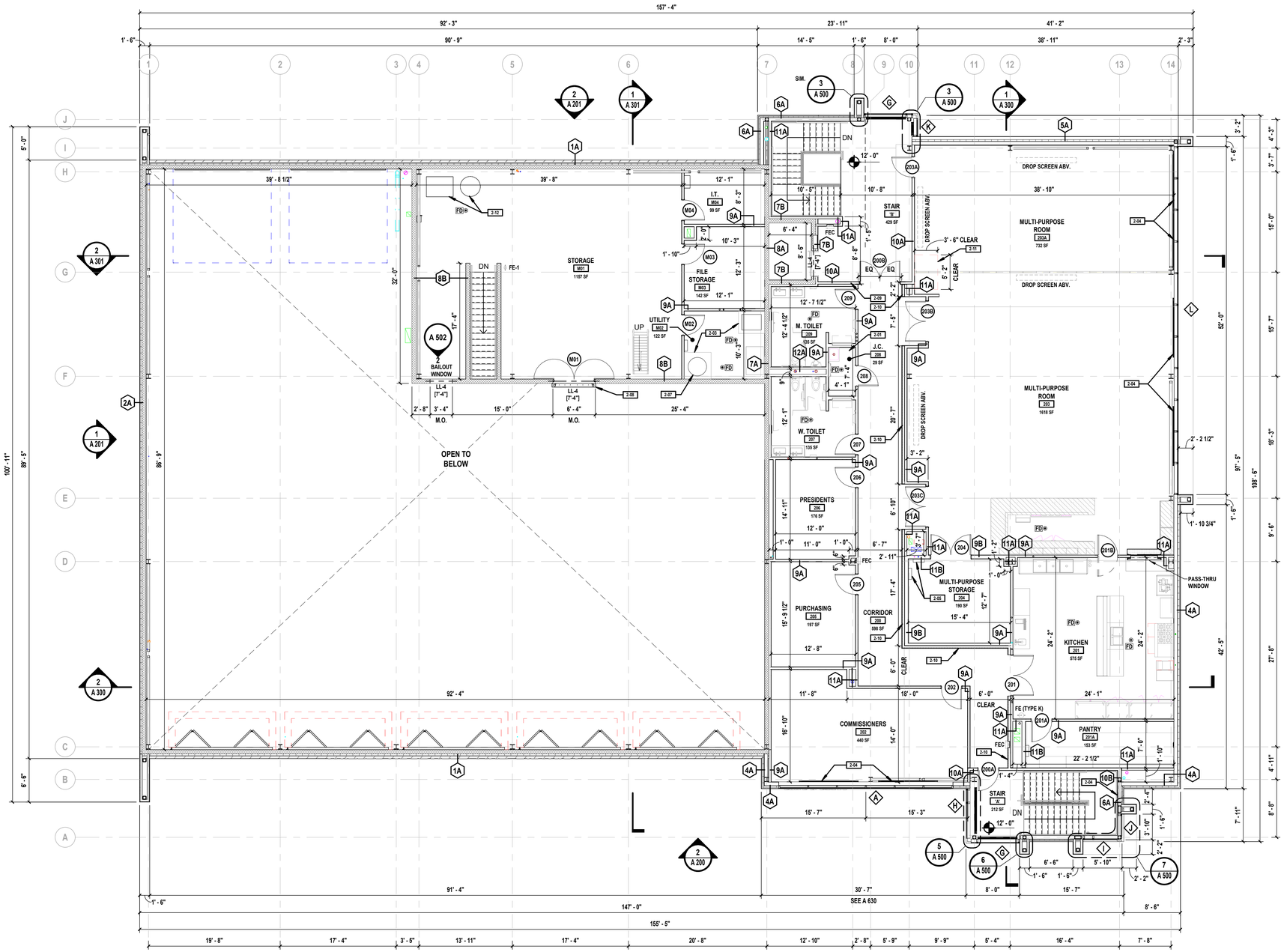

1 **Second Floor Plan**
SCALE: 1/8" = 1'-0"

GENERAL FLOOR PLAN NOTES

1. COORDINATE THE WORK INDICATED HERE WITH ALL CONTRACT DOCUMENTS AND SPECIFICATIONS.
2. ALL DIMENSIONS ARE TO FACE OF ROUGH STUD OR CONCRETE MASONRY UNIT (STRUCTURE), UNLESS NOTED OTHERWISE.
3. ALL DOORS IN STUD WALLS SHALL BE EITHER CENTERED ON WALLS OR 4" FROM WALL TO ROUGH JAMB, UNLESS NOTED OTHERWISE.
4. PROVIDE SADDLES WHERE INDICATED AT ROOM TRANSITIONS AS NOTED IN DOOR SCHEDULE. SADDLES TO BE FULL WIDTH OF OPENING. (SEE DOOR SADDLE DETAILS FOR ADDITIONAL INFORMATION).
5. ALL PAINTING SHALL BE PERFORMED IN ACCORDANCE WITH REQUIREMENTS CONTAINED IN SECTION 099000 OF PROJECT MANUAL.
6. REFER TO A 400 SERIES ENLARGED FLOOR PLANS, DETAILS, EQUIPMENT SCHEDULES AND ALL OTHER CONTRACT DOCUMENTS AND SPECIFICATIONS FOR ADDITIONAL FRAMING INFORMATION.
7. FOR ALL LINTELS DENOTED AS LL-#, SEE LINTEL SCHEDULE AND 'S' DRAWINGS FOR ADDITIONAL INFORMATION. ALL ELEVATIONS DENOTED [X'-X"] ARE TAKEN FROM ABOVE FINISH FLOOR (A.F.F.).
8. FOR DOORS DENOTED ⊖, REFER TO DOOR SCHEDULE FOR ADDITIONAL INFORMATION.
9. FOR WINDOWS DENOTED ◇, REFER TO WINDOW SCHEDULE FOR ADDITIONAL INFORMATION.
10. CONTRACT 'G' IS REQUIRED TO COORDINATE WITH ALL OTHER CONTRACTS AND ACCOMMODATE CONSTRUCTION TO ACCEPT ALL PIPING, CONDUITS, EQUIPMENT, ETC., EITHER SPECIFIED OR DETAILED TO BE RECESSED OR CONCEALED IN WALLS AS REQUIRED.
11. ALL EXPOSED CORNERS OF CONCRETE MASONRY UNIT WALL CONSTRUCTION SHALL HAVE BULLNOSE EDGE. SEE DETAILS ON A 500 SERIES DRAWINGS FOR ADDITIONAL INFORMATION.

FLOOR PLAN LEGEND

FD	NEW FLOOR DRAIN, PITCH FLOOR FOR POSITIVE DRAINAGE - COORDINATE WITH CONTRACT 'P'
CODP	NEW FLOOR CLEAN OUT - COORDINATE WITH CONTRACT 'P'
FEC	RECESSED FIRE EXTINGUISHER CABINET, REFER TO SPECIFICATIONS
FE-1	SURFACE MOUNTED FIRE EXTINGUISHER, REFER TO SPECIFICATIONS

SECOND FLOOR CONSTRUCTION KEYNOTE LEGEND

KEYNOTE	DESCRIPTION
2-01	ALL WALLS IN J.C. TO BE FINISHED WITH FRP PROTECTION PANELS, 54" HIGH. TYP. AT ALL J.C., REFER TO FINISH SCHEDULE.
2-03	CONCRETE HOUSEKEEPING PAD, PROVIDED AND INSTALLED BY CONTRACT 'P'
2-04	ELECTRIC HEATER, COORDINATE WITH CONTRACT 'M'.
2-05	ELECTRICAL PANEL PROVIDED AND INSTALLED BY CONTRACT 'E', REFER TO ELECTRICAL DRAWINGS.
2-07	HOT WATER HEATER PROVIDED AND INSTALLED BY CONTRACT 'P', COORDINATE WITH CONTRACT 'P'.
2-08	SAFETY GATE, REFER TO DOOR DETAILS FOR ADDITIONAL INFORMATION.
2-09	CONTRACTOR TO CONSTRUCT 1-HR RATED WALL (10A) PRIOR TO CONSTRUCTION OF 7B FURRED WALL. 1-HR RATING INTEGRITY TO BE MAINTAINED FOR STAIR ENCLOSURE.
2-10	INTERIOR WALL PANEL WITH LIGHT COVE, REFER TO DETAILS FOR ADDITIONAL INFORMATION. COORDINATE LIGHT COVE WITH CONTRACT 'E'.
2-11	STACK OF OPERABLE PARTITION WHEN IN THE OPEN POSITION. PROVIDE NO WALL BASE WHERE PARTITION JAMB ABUTS WALL CONSTRUCTION.
2-12	UNDERCARRIAGE SPRAY SYSTEM TANK AND PUMP BY CONTRACT 'P', REFER TO PLUMBING DRAWINGS.

H2M architects + engineers
538 Broad Hollow Road, 4th Floor East
Melville, NY 11747
631.756.8000 • www.h2m.com
NY Architecture & Landscape Architecture: No Certificate Required
NY Engineering Certificate of Authorization No.: 0018178

CONSULTANTS:

MARK	DATE	DESCRIPTION

REGISTERED ARCHITECT PATRICK O. STONE 039654 STATE OF NEW YORK

PATRICK O. STONE, R.A. — Exp. Date 10/31/2025
NY PROFESSIONAL ARCHITECT Lic. No. 039654
"IN ACCORDANCE WITH ARTICLE 145, SECTION 7209 OF THE NYS EDUCATION LAW, ALTERATION OF THIS DOCUMENT EXCEPT BY A LICENSED PROFESSIONAL IS ILLEGAL."

DESIGNED BY:	DRAWN BY:	CHECKED BY:	REVIEWED BY:
DBS/RLG	ANK	DBS	POS
PROJECT No: TRFD 2302	DATE: FEBRUARY 2025	SCALE: AS SHOWN	

CLIENT
THIELLS ROSEVILLE FIRE DISTRICT

NEW 26-100 FIRE HEADQUARTERS

THIELLS 26 FD

65 W RAMAPO ROAD
GARNERVILLE, NY 10923

CONTRACT
CONTRACT G
GENERAL CONSTRUCTION

STATUS
FINAL BID DOCUMENT

SHEET TITLE
FLOOR PLAN - SECOND FLOOR

DRAWING No.
A 102.00

C:\Users\akaled\Documents\TRFD2302_Central23-A_AKaled.rvt
2/25/2025 4:06:22 PM

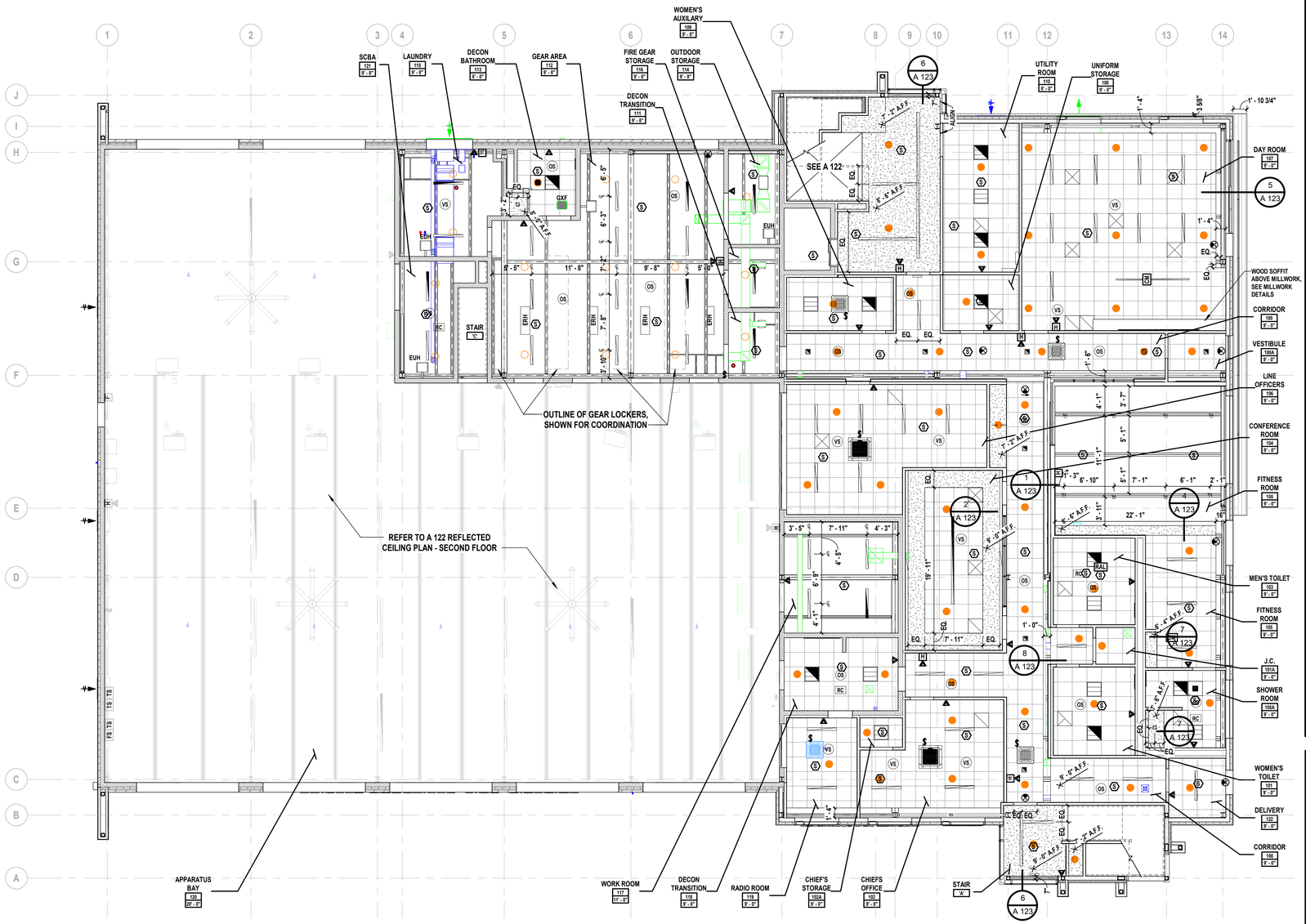

1 **First Floor Reflected Ceiling Plan**
SCALE: 1/8" = 1'-0"

REFLECTED CEILING PLAN LEGEND

	2' x 2' ACOUSTICAL CEILING PANEL
	GYPSUM BOARD CEILING, PAINT. PROVIDE MR-GYPSUM BOARD IN SHOWER AREAS
	EXPOSED STRUCTURE, PAINT STRUCTURE AND METAL DECK
	LINEAR METAL CEILING, REFER TO SPECIFICATION FOR ADDITIONAL INFORMATION
	VENTED ALUMINUM SOFFIT - SEE ROOF PLAN FOR ADDITIONAL INFORMATION
	2'x2' LAY-IN FIXTURE - SEE 'E' DRAWINGS FOR ADDITIONAL INFORMATION
	SQUARE RECESSED DOWNLIGHT - SEE 'E' DRAWINGS FOR ADDITIONAL INFORMATION
	PENDANT LIGHT FIXTURE - SEE 'E' DRAWINGS FOR ADDITIONAL INFORMATION
OS VS	OCCUPANCY / VACANCY SENSOR, CEILING MOUNTED - SEE 'E' DRAWINGS FOR ADDITIONAL INFORMATION
F	FIRE ALARM PULL STATION - SEE 'FA' DRAWINGS FOR ADDITIONAL INFORMATION
H	FIRE ALARM HORN / STROBE -SEE 'FA' DRAWINGS FOR ADDITIONAL INFORMATION
	CEILING MOUNTED PROJECTOR PROVIDED BY OWNER, INSTALL BY CONTRACT 'G' - SEE 'E' DRAWINGS FOR ADDITIONAL INFORMATION
	SIDEWALL SPRINKLER - SEE 'FP' DRAWINGS FOR ADDITIONAL INFORMATION
H S	HEAT / SMOKE DETECTOR - SEE 'FA' DRAWINGS FOR ADDITIONAL INFORMATION
	CONCEALED / EXPOSED PENDENT SPRINKLER HEAD - SEE 'FP' DRAWINGS FOR ADDITIONAL INFORMATION
	CEILING MOUNTED INDOOR VRF CASSETTE - SEE 'M' DRAWINGS FOR ADDITIONAL INFORMATION
	SUPPLY DIFFUSER - SEE 'M' DRAWINGS FOR ADDITIONAL INFORMATION
EUH	ELECTRIC UNIT HEATERS - SEE 'M' DRAWINGS FOR ADDITIONAL INFORMATION
GXF	GENERAL EXHAUST FANS - SEE 'M' DRAWINGS FOR ADDITIONAL INFORMATION
ERH	ELECTRIC RADIANT - SEE 'M' DRAWINGS FOR ADDITIONAL INFORMATION
	UNIT HEATER MOUNTED TO STRUCTURE ABOVE - SEE 'M' DRAWINGS FOR ADDITIONAL INFORMATION
	UPRIGHT SPRINKLER HEAD - SEE 'FP' DRAWINGS FOR ADDITIONAL INFORMATION

REFLECTED CEILING PLAN NOTES

1. CONTRACTOR IS TO COORDINATE ALL THE WORK REQUIRED ON THIS DRAWING WITH ALL ARCHITECTURAL, STRUCTURAL, & MEP DRAWINGS AND SPECIFICATIONS.
2. CONTRACTOR IS TO CENTER THE CEILING GRID AND COORDINATE GRID LAYOUT TO PROVIDE NO SLIVER PIECES LESS THAN 3".
3. CONTRACTOR TO PROVIDE COORDINATION DRAWINGS FOR ALL EQUIPMENT AND LIGHTING PRIOR TO CONSTRUCTION.
4. CONTRACTOR, ARCHITECT AND OWNER TO HAVE A CEILING COORDINATION MEETING PRIOR TO ORDERING MATERIALS.
5. ACCOMMODATE THE CONSTRUCTION TO ACCEPT ALL PIPING, CONDUITS, EQUIPMENT, ETC., EITHER SPECIFIED OR DETAILED TO BE RECESSED OR CONCEALED IN MASONRY WALLS AS REQUIRED BY THIS CONTRACT. COORDINATE THE LOCATION OF ANY RECESSED OR CONCEALED ITEMS.
6. SEE CEILING DETAILS ON DRAWING A 123 FOR ADDITIONAL INFORMATION.

H2M architects + engineers
538 Broad Hollow Road, 4th Floor East
Melville, NY 11747
631.756.8000 • www.h2m.com
NY Architecture & Landscape Architecture: No Certificate Required
NY Engineering Certificate of Authorization No.: 0018178

CONSULTANTS:

MARK	DATE	DESCRIPTION

REGISTERED ARCHITECT PATRICK O. STONE 0396654 STATE OF NEW YORK

10/31/2025
Exp. Date

PATRICK O. STONE, R.A.
NY PROFESSIONAL ARCHITECT Lic. No. 036654

"IN ACCORDANCE WITH ARTICLE 145, SECTION 7209 OF THE NYS EDUCATION LAW, ALTERATION OF THIS DOCUMENT EXCEPT BY A LICENSED PROFESSIONAL IS ILLEGAL"

DESIGNED BY:	DRAWN BY:	CHECKED BY:	REVIEWED BY:
DBS/RLG	ANK	DBS	POS

PROJECT No:	DATE:	SCALE:
TRFD 2302	FEBRUARY 2025	AS SHOWN

CLIENT

THIELLS ROSEVILLE FIRE DISTRICT

NEW 26-100 FIRE HEADQUARTERS

THIELLS 26 FD

65 W RAMAPO ROAD
GARNERVILLE, NY 10923

CONTRACT

CONTRACT G
GENERAL CONSTRUCTION

STATUS

FINAL BID DOCUMENT

SHEET TITLE

REFLECTED CEILING PLAN - FIRST FLOOR

DRAWING No.

A 121.00

C:\Users\akaled\Documents\TRFD2302_Central23-A_AKaled.rvt

2/25/2025 4:06:27 PM

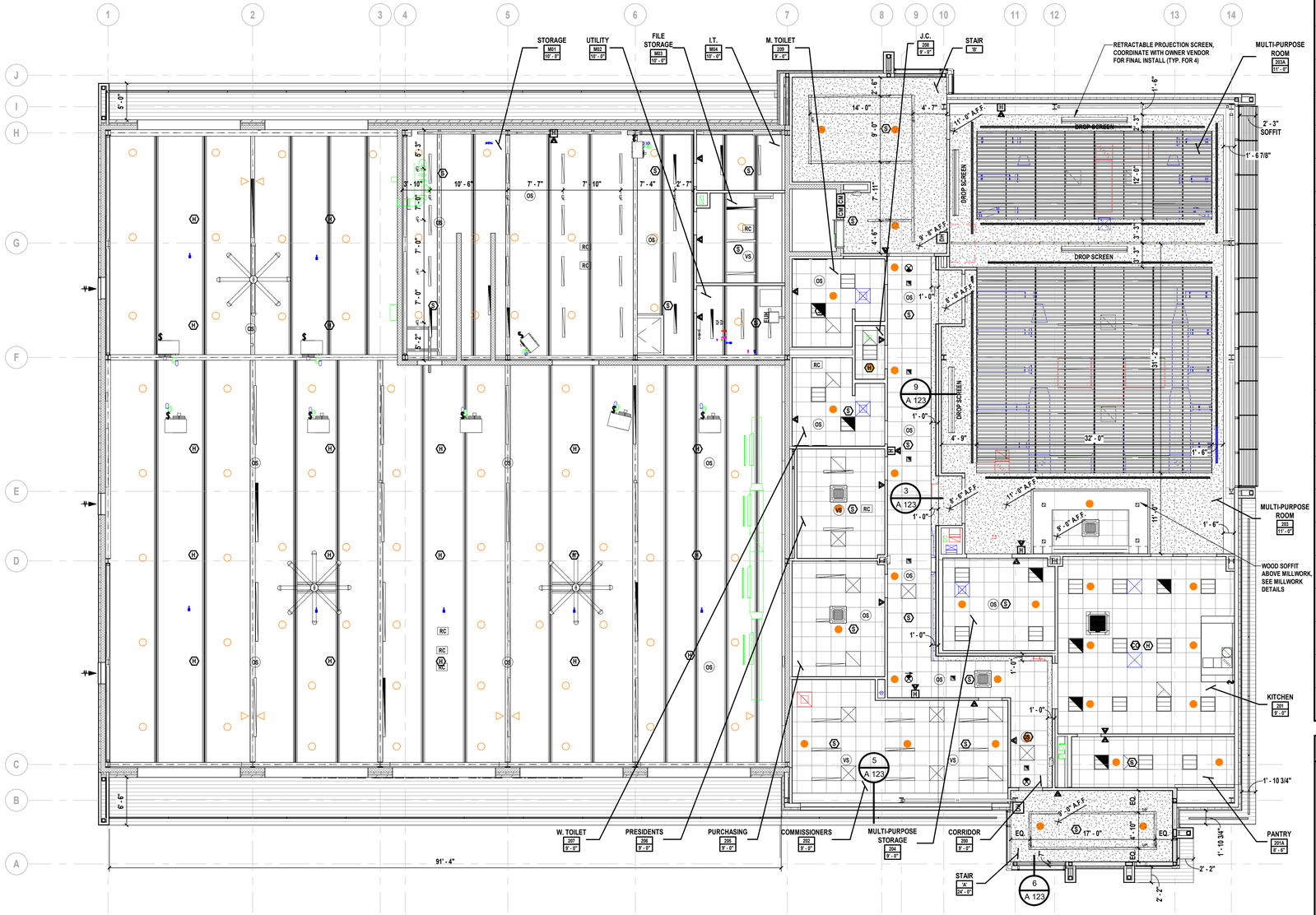

1 Second Floor Reflected Ceiling Plan
SCALE: 1/8" = 1'-0"

REFLECTED CEILING PLAN LEGEND

	2' x 2' ACOUSTICAL CEILING PANEL
	GYPSUM BOARD CEILING, PAINT. PROVIDE MR-GYPSUM BOARD IN SHOWER AREAS
	EXPOSED STRUCTURE, PAINT STRUCTURE AND METAL DECK
	LINEAR METAL CEILING, REFER TO SPECIFICATION FOR ADDITIONAL INFORMATION
	VENTED ALUMINUM SOFFIT - SEE ROOF PLAN FOR ADDITIONAL INFORMATION
	2'x2' LAY-IN FIXTURE - SEE 'E' DRAWINGS FOR ADDITIONAL INFORMATION
	SQUARE RECESSED DOWNLIGHT - SEE 'E' DRAWINGS FOR ADDITIONAL INFORMATION
	PENDANT LIGHT FIXTURE - SEE 'E' DRAWINGS FOR ADDITIONAL INFORMATION
OS VS	OCCUPANCY / VACANCY SENSOR, CEILING MOUNTED - SEE 'E' DRAWINGS FOR ADDITIONAL INFORMATION
F	FIRE ALARM PULL STATION - SEE 'FA' DRAWINGS FOR ADDITIONAL INFORMATION
H	FIRE ALARM HORN / STROBE -SEE 'FA' DRAWINGS FOR ADDITIONAL INFORMATION
	CEILING MOUNTED PROJECTOR PROVIDED BY OWNER, INSTALL BY CONTRACT 'G' - SEE 'E' DRAWINGS FOR ADDITIONAL INFORMATION
	SIDEWALL SPRINKLER - SEE 'FP' DRAWINGS FOR ADDITIONAL INFORMATION
H S	HEAT / SMOKE DETECTOR - SEE 'FA' DRAWINGS FOR ADDITIONAL INFORMATION
	CONCEALED / EXPOSED PENDENT SPRINKLER HEAD - SEE 'FP' DRAWINGS FOR ADDITIONAL INFORMATION
	CEILING MOUNTED INDOOR VRF CASSETTE - SEE 'M' DRAWINGS FOR ADDITIONAL INFORMATION
	SUPPLY DIFFUSER - SEE 'M' DRAWINGS FOR ADDITIONAL INFORMATION
EUH	ELECTRIC UNIT HEATERS - SEE 'M' DRAWINGS FOR ADDITIONAL INFORMATION
GXF	GENERAL EXHAUST FANS - SEE 'M' DRAWINGS FOR ADDITIONAL INFORMATION
ERH	ELECTRIC RADIANT - SEE 'M' DRAWINGS FOR ADDITIONAL INFORMATION
	UNIT HEATER MOUNTED TO STRUCTURE ABOVE - SEE 'M' DRAWINGS FOR ADDITIONAL INFORMATION
	UPRIGHT SPRINKLER HEAD - SEE 'FP' DRAWINGS FOR ADDITIONAL INFORMATION

REFLECTED CEILING PLAN NOTES

1. CONTRACTOR IS TO COORDINATE ALL THE WORK REQUIRED ON THIS DRAWING WITH ALL ARCHITECTURAL, STRUCTURAL, & MEP DRAWINGS AND SPECIFICATIONS.
2. CONTRACTOR IS TO CENTER THE CEILING GRID AND COORDINATE GRID LAYOUT TO PROVIDE NO SLIVER PIECES LESS THAN 3".
3. CONTRACTOR TO PROVIDE COORDINATION DRAWINGS FOR ALL EQUIPMENT AND LIGHTING PRIOR TO CONSTRUCTION.
4. CONTRACTOR, ARCHITECT AND OWNER TO HAVE A CEILING COORDINATION MEETING PRIOR TO ORDERING MATERIALS.
5. ACCOMMODATE THE CONSTRUCTION TO ACCEPT ALL PIPING, CONDUITS, EQUIPMENT, ETC., EITHER SPECIFIED OR DETAILED TO BE RECESSED OR CONCEALED IN MASONRY WALLS AS REQUIRED BY THIS CONTRACT. COORDINATE THE LOCATION OF ANY RECESSED OR CONCEALED ITEMS.
6. SEE CEILING DETAILS ON DRAWING A 123 FOR ADDITIONAL INFORMATION.

H2M architects + engineers
538 Broad Hollow Road, 4th Floor East
Melville, NY 11747
631.756.8000 • www.h2m.com
NY Architecture & Landscape Architecture: No Certificate Required
NY Engineering Certificate of Authorization No.: 0018178

CONSULTANTS:

MARK	DATE	DESCRIPTION

REGISTERED ARCHITECT PATRICK O. STONE 039654 STATE OF NEW YORK

PATRICK O. STONE, R.A.
NY PROFESSIONAL ARCHITECT Lic. No. 039654
10/31/2025 Exp. Date

"IN ACCORDANCE WITH ARTICLE 145, SECTION 7209 OF THE NYS EDUCATION LAW, ALTERATION OF THIS DOCUMENT EXCEPT BY A LICENSED PROFESSIONAL IS ILLEGAL"

DESIGNED BY:	DRAWN BY:	CHECKED BY:	REVIEWED BY:
DBS/RLG	ANK	DBS	POS
PROJECT No: TRFD 2302	DATE: FEBRUARY 2025	SCALE: AS SHOWN	

CLIENT

THIELLS ROSEVILLE FIRE DISTRICT

NEW 26-100 FIRE HEADQUARTERS

THIELLS 26 FD

65 W RAMAPO ROAD
GARNERVILLE, NY 10923

CONTRACT
CONTRACT G
GENERAL CONSTRUCTION

STATUS
FINAL BID DOCUMENT

SHEET TITLE
REFLECTED CEILING PLAN - SECOND FLOOR

DRAWING No.
A 122.00

C:\Users\akaled\Documents\TRFD2302_Central23-A_AKaled.rvt

2/25/2025 4:06:30 PM

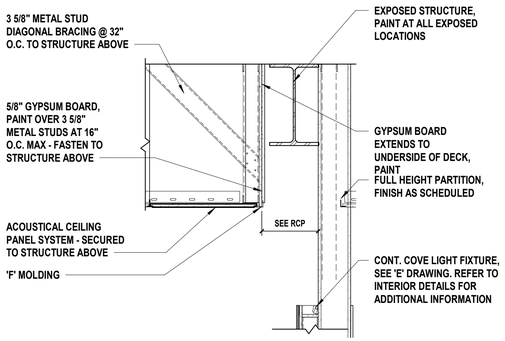

1 Ceiling Detail - Typ. Corridor

SCALE: 3/4" = 1'-0"

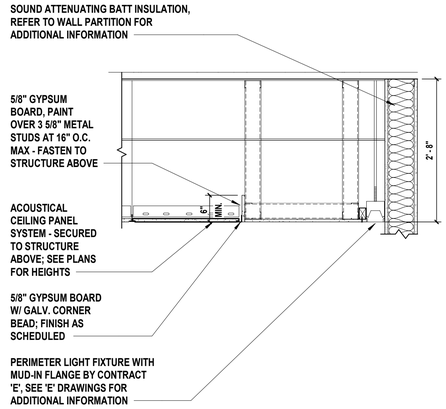

2 Ceiling Detail - Conference Room

SCALE: 3/4" = 1'-0"

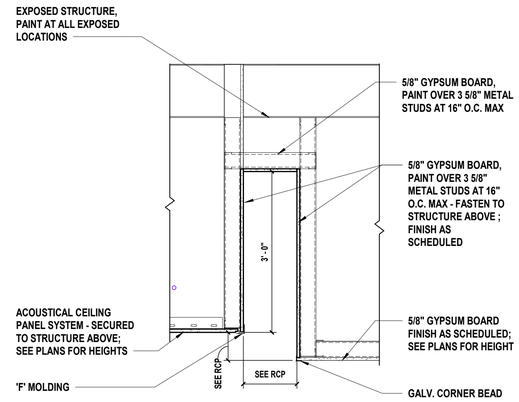

3 Corridor and Soffit

SCALE: 3/4" = 1'-0"

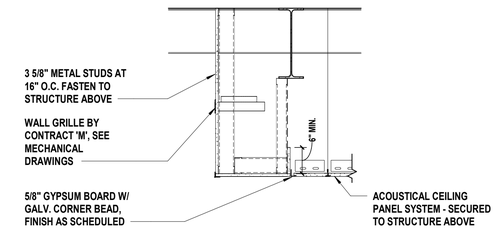

4 Ceiling Detail - Fitness Room Soffit

SCALE: 3/4" = 1'-0"

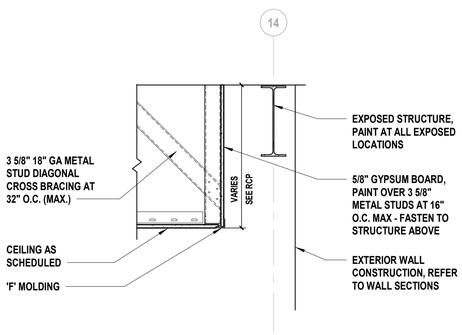

5 Ceiling Detail - Perimeter, Typ.

SCALE: 3/4" = 1'-0"

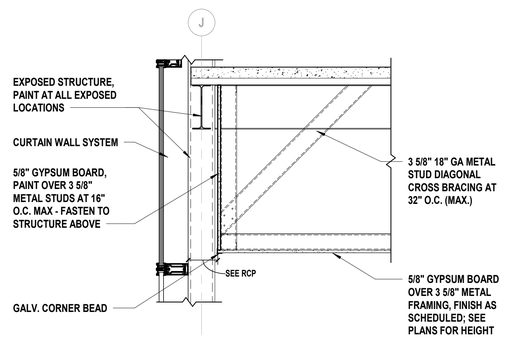

6 Ceiling Detail -Typical

SCALE: 3/4" = 1'-0"

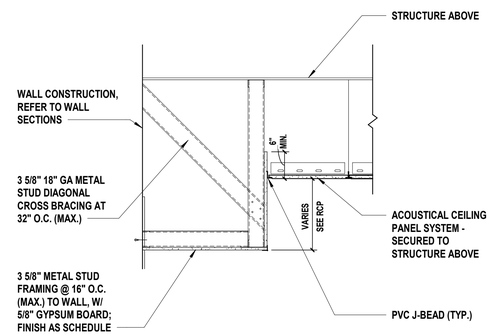

7 Ceiling Soffit Detail

SCALE: 3/4" = 1'-0"

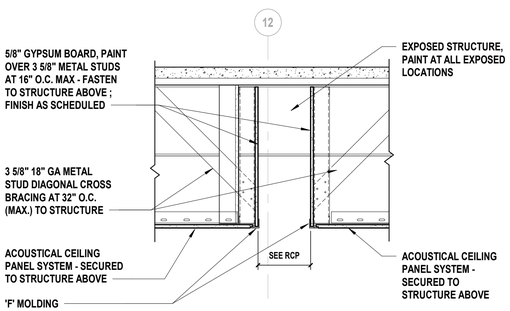

8 Ceiling Detail

SCALE: 3/4" = 1'-0"

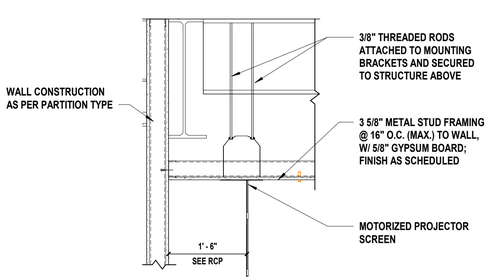

9 Ceiling Detail - Projector Screen Detail

SCALE: 3/4" = 1'-0"

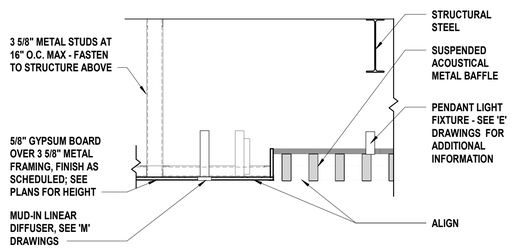

10 Acoustical Suspended Baffle Ceiling Detail

SCALE: 3/4" = 1'-0"

C:\Users\akelel\Documents\TRF22302_Central23-A_AKelel.rvt

2/25/2025 4:06:35 PM

H 2 M architects + engineers

538 Broad Hollow Road, 4th Floor East
Melville, NY 11747
631.756.8000 • www.h2m.com
NY Architecture & Landscape Architecture: No Certificate Required
NY Engineering Certificate of Authorization No.: 0018178

CONSULTANTS:

MARK	DATE	DESCRIPTION

REGISTERED ARCHITECT PATRICK O. STONE 0396654 STATE OF NEW YORK

10/31/2025
Exp. Date

PATRICK O. STONE, R.A.
NY PROFESSIONAL ARCHITECT Lic. No. 036654

"IN ACCORDANCE WITH ARTICLE 145, SECTION 7209 OF THE NYS EDUCATION LAW, ALTERATION OF THIS DOCUMENT EXCEPT BY A LICENSED PROFESSIONAL IS ILLEGAL."

DESIGNED BY:	DRAWN BY:	CHECKED BY:	REVIEWED BY:
DBS/RLG	ANK	DBS	POS

PROJECT No:	DATE:	SCALE:
TRFD 2302	FEBRUARY 2025	AS SHOWN

CLIENT

THIELLS ROSEVILLE FIRE DISTRICT

NEW 26-100 FIRE HEADQUARTERS

THIELLS 26 FD

65 W RAMAPO ROAD
GARNERVILLE, NY 10923

CONTRACT

CONTRACT G
GENERAL CONSTRUCTION

STATUS

FINAL BID DOCUMENT

SHEET TITLE

CEILING DETAILS

DRAWING No.

A 123.00

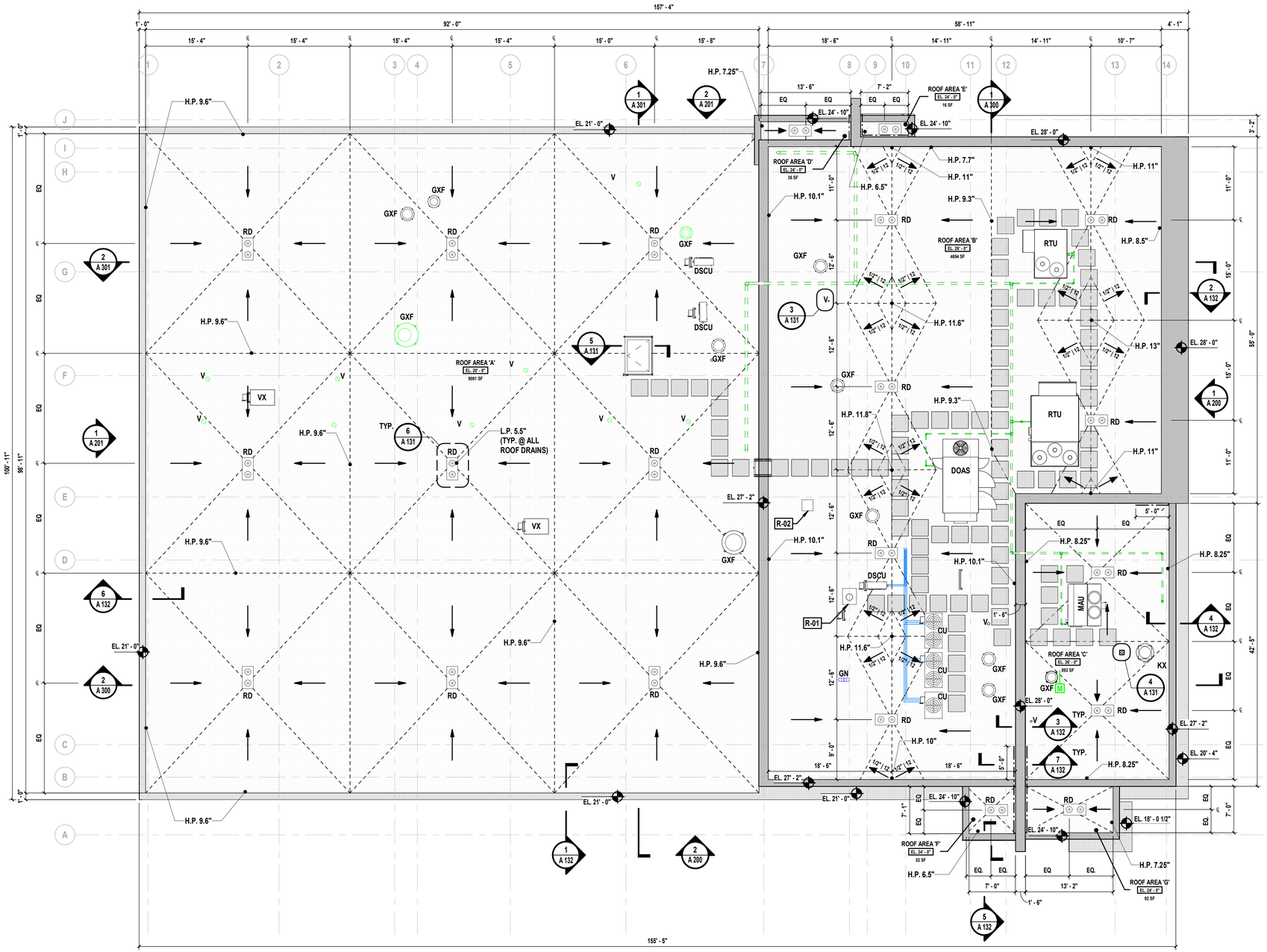

1 **Roof Plan**
SCALE: 1/8" = 1'-0"

GENERAL ROOFING NOTES

1. THIS DRAWING SERVES AS A DEPICTION OF PRINCIPAL ROOFING ITEMS AND IS NOT A COMPLETE LIST OF EVERY ROOFING ITEM AND ACCESSORY. THIS DRAWING MUST BE COORDINATED WITH ALL OTHER DRAWINGS, ROOF DETAILS AND WITH ALL ITEMS SPECIFIED.
2. CONTRACT 'G' IS RESPONSIBLE FOR PROVIDING ALL MATERIALS, LABOR, ROOFING ITEMS AND ACCESSORIES REQUIRED FOR A COMPLETE, WEATHER TIGHT AND WARRANTED INSTALLATION WHETHER OR NOT ITEMS MAY BE INDICATED ON THE DRAWINGS.
3. COORDINATE THE WORK REQUIRED ON THIS DRAWING WITH ALL STRUCTURAL, CIVIL, ARCHITECTURAL, MECHANICAL, PLUMBING AND ELECTRICAL DRAWINGS, AND SPECIFICATIONS.
4. CONTRACT 'G' TO COORDINATE WITH ALL OTHER CONTRACTS AND VERIFY EXACT LOCATIONS OF PENETRATIONS TO BE MADE IN ALL ROOFS AND ROOF ASSEMBLIES. PROVIDE PITCH POCKETS AS NEEDED.
5. CONTRACT 'G' SHALL REVIEW, COORDINATE, AND INSTALL SLEEVES AND LOCATE ALL MECHANICAL PENETRATIONS REQUIRED TO ACCOMMODATE ALL WORK DETAILED OR SPECIFIED.
6. CONTRACT 'G' IS RESPONSIBLE TO MAKE AND PROPERLY FLASH ALL ROOF PENETRATIONS. THE CONTRACTOR IS RESPONSIBLE FOR PROVIDING AND INSTALLING ALL FLASHING FOR ALL ROOF PENETRATIONS IN ACCORDANCE WITH ROOFING MANUFACTURER'S WARRANTY REQUIREMENTS AND SPECIFICATIONS U.N.O.
7. CONTRACT 'G' SHALL PROVIDE ALL TEMPORARY ROOF FLASHING WORK AS REQUIRED. IT IS THE RESPONSIBILITY OF THE CONTRACTOR TO MAINTAIN A WEATHER TIGHT ROOF AT ALL TIMES.
8. PROVIDE CRICKETS BEHIND ALL ROOFING ITEMS TO PROVIDE PITCH AND PREVENT PONDING. MODIFY AREAS OF WORK AS NECESSARY TO KEEP POSITIVE DRAINAGE.
9. CONTRACT 'G' SHALL PROVIDE ADEQUATE TEMPORARY DRAINAGE FOR ALL PORTIONS OF THE ROOF, THROUGHOUT THE ENTIRE DURATION OF THE PROJECT.
10. CONTRACTOR 'M' SHALL FURNISH SLEEVES AND LOCATE ALL MECHANICAL PENETRATIONS REQUIRED TO ACCOMMODATE ALL WORK DETAILED OR SPECIFIED.
11. CONTRACT 'M' SHALL FURNISH ALL CURBS FOR EXHAUST FANS, AND HEATING/COOLING UNITS TO CONTRACT 'G' FOR INSTALLATION.
12. ROOFING INSTALLATION SHALL INCLUDE PROVIDING ALL PENETRATIONS FOR ALL ITEMS NECESSARY, WHETHER SHOWN OR NOT, AND SHALL ALSO INCLUDE TERMINATIONS AND FLASHING AS REQUIRED TO PROVIDE WARRANTED SYSTEMS IN ACCORDANCE WITH THE SPECIFIED WARRANTY REQUIREMENTS.
13. CONTRACT 'G' IS RESPONSIBLE FOR ALL DAMAGES TO THE INTERIOR AND EXTERIOR OF THE BUILDING THAT RESULTED FROM AND DURING ROOFING INSTALLATION, INCLUDING BUT NOT LIMITED TO, ADHESIVE DRIPPINGS, WATER LEAKS, ETC.
14. CONTRACT 'G' SHALL PROVIDE SNOW GUARDS AT ALL LOCATIONS WHERE ENTRANCES OR PEDESTRIAN TRAFFIC ARE LOCATED BELOW.

ROOFING SYMBOL LEGEND

	EPDM ROOFING SYSTEM
	WALKWAY PADS - FINAL LOCATION TO BE DETERMINED IN FIELD WITH OWNER/ARCHITECT
	ROOF COPING
	METAL WALL CLADDING OVER PARAPET WALL, REFER TO ROOFING DETAILS FOR ADDITIONAL INFORMATION
L.P. / H.P.	LOW POINT / HIGH POINT OF ROOF INSULATION
	ROOF PITCH - 1/4" PER FOOT, MIN., U.N.O.
V	VENT - SEE 'M' AND 'P' DRAWINGS
	ROOF TIE OFF
	ROOF HATCH
RD	ROOF DRAIN (L.P.) W/ PRIMARY AND OVERFLOW - COORDINATE WITH 'P' DRAWINGS
CU	CONDENSING UNIT, SIZE AND SHAPE VARY - COORDINATE WITH 'M' DRAWINGS
DSCU	AIR-COOLED CONDENSING UNITS. CONTRACT 'M' TO PROVIDE METAL CURBS FOR INSTALLATION BY CONTRACT 'G' - COORDINATE WITH 'M' DRAWINGS
GXF VX KX	GENERAL, VEHICLE & KITCHEN EXHAUST FANS, SIZE AND SHAPE VARY. CONTRACT 'M' TO PROVIDE METAL CURBS FOR INSTALLATION BY CONTRACT 'G' - COORDINATE WITH 'M' DRAWINGS
MAU	MAKE UP AIR UNIT - COORDINATE WITH 'M' DRAWINGS
DOAS	DEDICATED OUTDOOR AIR SYSTEM, SIZE AND SHAPE VARY - COORDINATE WITH 'M' DRAWINGS
RTU	GENERAL EXHAUST FAN, VEHICLE EXHAUST & KITCHEN EXHAUST, SIZE AND SHAPE VARY - COORDINATE WITH 'M' DRAWINGS
	STAINLESS STEEL CHANNEL SUPPORT, SIZE AND SHAPE VARY - COORDINATE WITH 'E' DRAWINGS

ROOF KEYNOTE LEGEND

KEYNOTE	DESCRIPTION
R-01	POLE MOUNTED SIREN, PROVIDED BY OWNER, INSTALLED BY CONTRACT 'G'.
R-02	ROOF MOUNTED RADIO TOWER, PROVIDED BY OWNER, CONTRACT 'G' TO COORDINATE FINAL INSTALL.

H2M architects + engineers
538 Broad Hollow Road, 4th Floor East
Melville, NY 11747
631.756.8000 • www.h2m.com
NY Architecture & Landscape Architecture: No Certificate Required
NY Engineering Certificate of Authorization No.: 0018178

CONSULTANTS:

MARK	DATE	DESCRIPTION

REGISTERED ARCHITECT PATRICK O. STONE STATE OF NEW YORK 036954

10/31/2025
Exp. Date

PATRICK O. STONE, R.A.
NY PROFESSIONAL ARCHITECT Lic. No. 036954

"IN ACCORDANCE WITH ARTICLE 145, SECTION 7209 OF THE NYS EDUCATION LAW, ALTERATION OF THIS DOCUMENT EXCEPT BY A LICENSED PROFESSIONAL IS ILLEGAL"

DESIGNED BY:	DRAWN BY:	CHECKED BY:	REVIEWED BY:
DBS/RLG	ANK	DBS	POS

PROJECT No:	DATE:	SCALE:
TRFD 2302	FEBRUARY 2025	AS SHOWN

CLIENT

THIELLS ROSEVILLE FIRE DISTRICT

NEW 26-100 FIRE HEADQUARTERS

THIELLS 26 FD

65 W RAMAPO ROAD
GARNERVILLE, NY 10923

CONTRACT

CONTRACT G
GENERAL CONSTRUCTION

STATUS

FINAL BID DOCUMENT

SHEET TITLE

ROOF PLAN

DRAWING No.

A 130.00

C:\Users\akaled\Documents\TRFD2302_Central25-A_AKaled.rvt

2/25/2025 4:06:39 PM

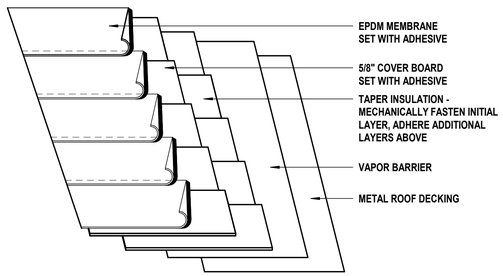

1 Typical EPDM Roofing System
SCALE: 1 1/2" = 1'-0"

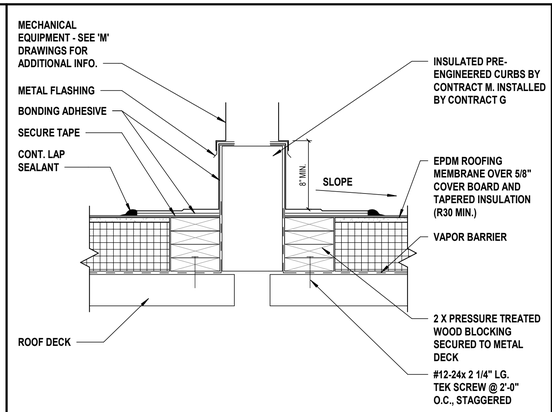

2 Typical Roof Curb Detail (EPDM Roof)
SCALE: 1 1/2" = 1'-0"

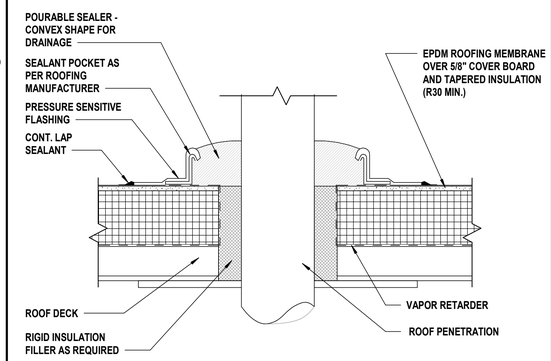

3 Typical Pitch Pocket Detail (EPDM Roof)
SCALE: 1 1/2" = 1'-0"

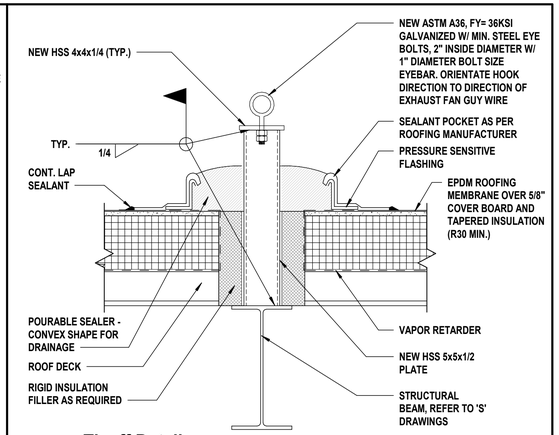

4 Tieoff Detail
SCALE: 1 1/2" = 1'-0"

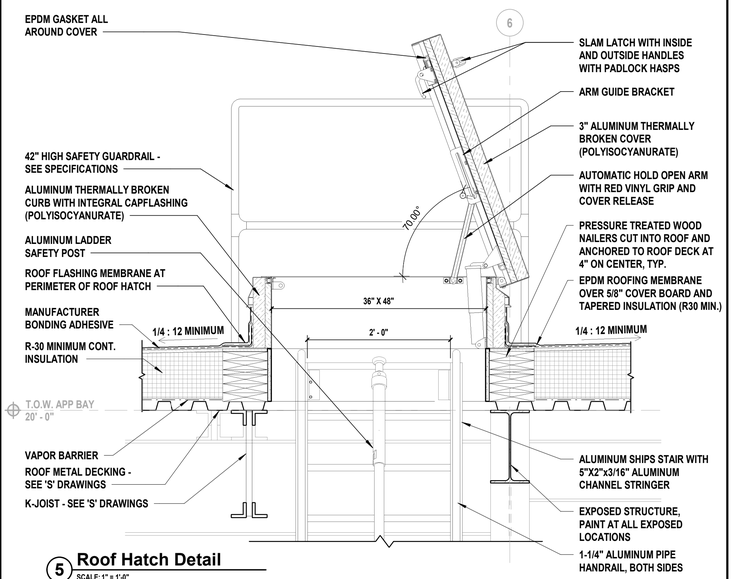

5 Roof Hatch Detail
SCALE: 1" = 1'-0"

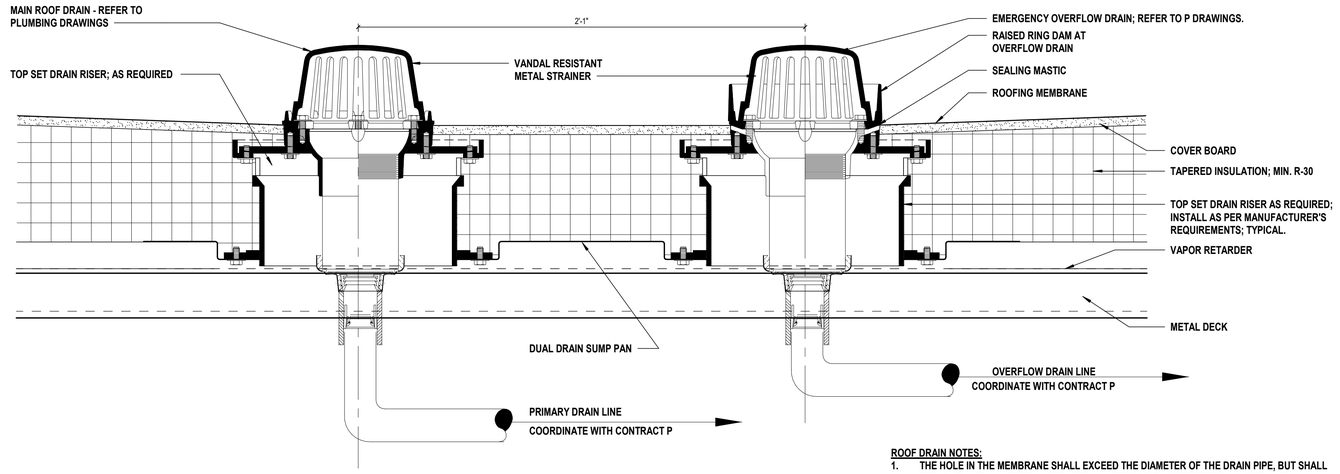

ROOF DRAIN NOTES:

1. THE HOLE IN THE MEMBRANE SHALL EXCEED THE DIAMETER OF THE DRAIN PIPE, BUT SHALL BE NO LESS THAN 1/2" FROM THE ATTACHMENT POINTS OF THE DRAIN CLAMPING RING.
2. ALL BOLTS OR CLAMPS MUST BE IN PLACE TO PROVIDE CONSTANT COMPRESSION ON WATER CUT-OFF MASTIC.
3. PROVIDE BEAD OF CUT-EDGE SEALANT AT ALL CUT EDGES OF MEMBRANE AS PER ROOFING SYSTEM MANUFACTURER'S REQUIRED INSTALLATION.

6 Combination Roof Drain Detail
SCALE: 3" = 1'-0"

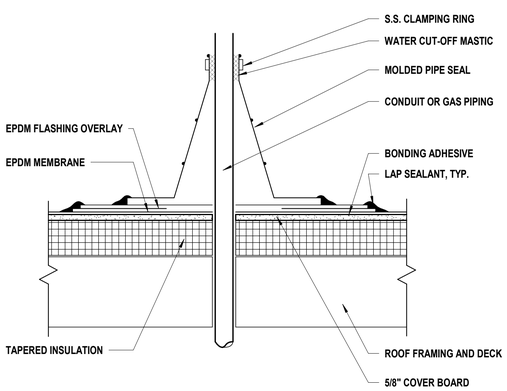

7 Typical Pipe Penetration Detail
SCALE: 1 1/2" = 1'-0"

H 2 M architects + engineers

538 Broad Hollow Road, 4th Floor East
Melville, NY 11747
631.756.8000 • www.h2m.com
NY Architecture & Landscape Architecture: No Certificate Required
NY Engineering Certificate of Authorization No.: 0018178

CONSULTANTS:

MARK	DATE	DESCRIPTION

REGISTERED ARCHITECT PATRICK O. STONE STATE OF NEW YORK 0396654

10/31/2025
Exp. Date

PATRICK O. STONE, R.A.
NY PROFESSIONAL ARCHITECT Lic. No. 0396654

"IN ACCORDANCE WITH ARTICLE 145, SECTION 7209 OF THE NYS EDUCATION LAW, ALTERATION OF THIS DOCUMENT EXCEPT BY A LICENSED PROFESSIONAL IS ILLEGAL."

DESIGNED BY:	DRAWN BY:	CHECKED BY:	REVIEWED BY:
DBS/RLG	ANK	DBS	POS
PROJECT No: TRFD 2302	DATE: FEBRUARY 2025	SCALE: AS SHOWN	

CLIENT

THIELLS ROSEVILLE FIRE DISTRICT

NEW 26-100 FIRE HEADQUARTERS

THIELLS 26 FD

65 W RAMAPO ROAD GARNERVILLE, NY 10923

CONTRACT

CONTRACT G GENERAL CONSTRUCTION

STATUS

FINAL BID DOCUMENT

SHEET TITLE

ROOFING DETAILS

DRAWING No.

A 131.00

C:\Users\akaled\Documents\TRFD2302_Central23-A_AKaled.rvt

2/25/2025 4:06:42 PM

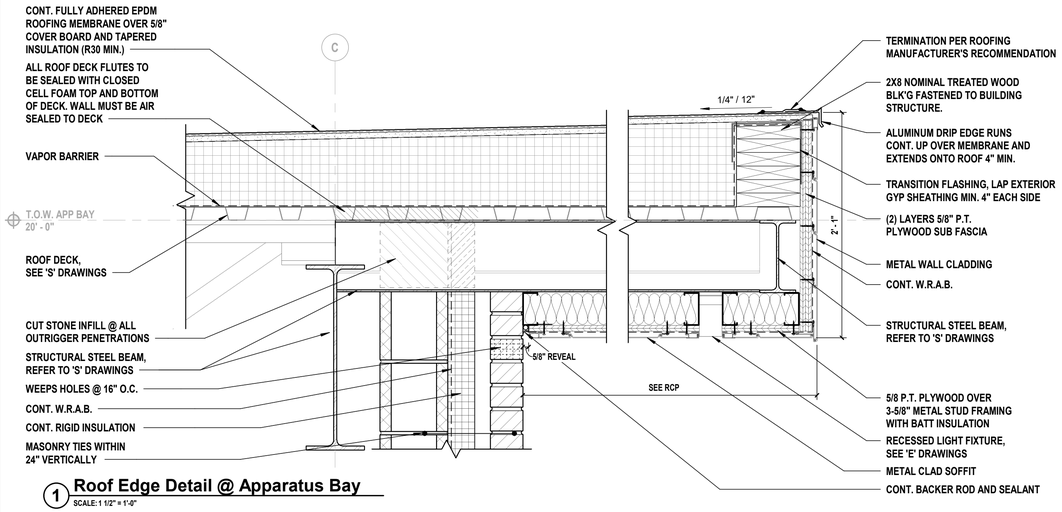

1 **Roof Edge Detail @ Apparatus Bay**
SCALE: 1 1/2" = 1'-0"

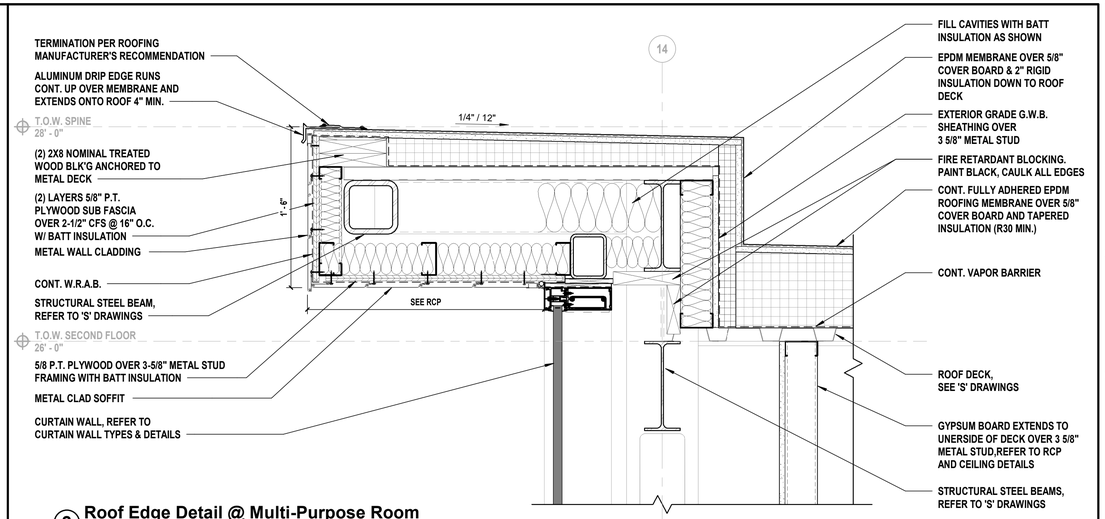

2 **Roof Edge Detail @ Multi-Purpose Room**
SCALE: 1 1/2" = 1'-0"

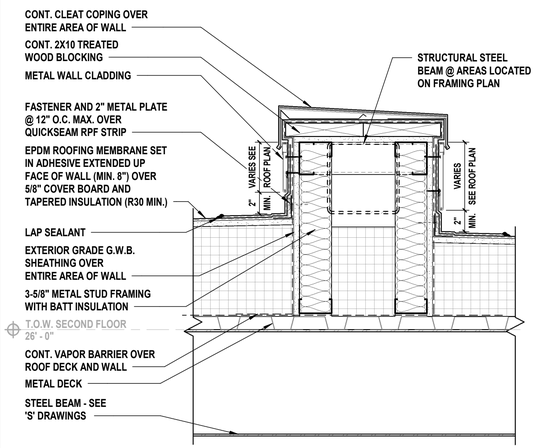

3 **Platform Framed Parapet Detail (Siding)**
SCALE: 1 1/2" = 1'-0"

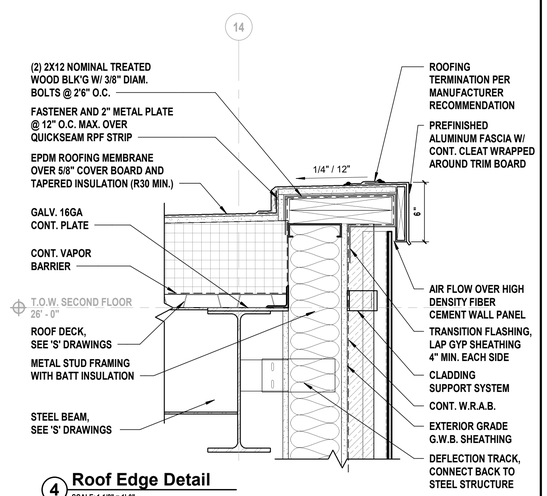

4 **Roof Edge Detail**
SCALE: 1 1/2" = 1'-0"

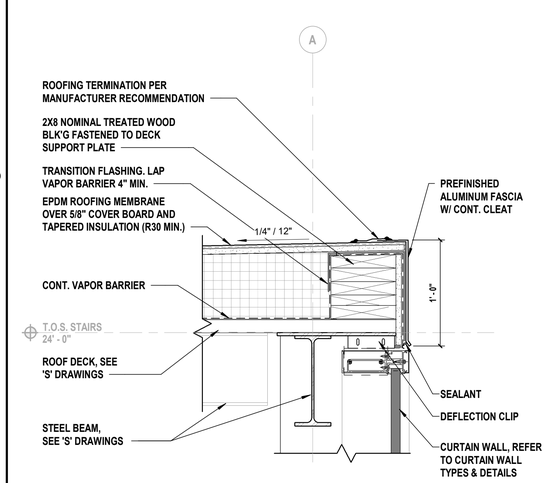

5 **Roof Edge Detail @ Curtain Wall**
SCALE: 1 1/2" = 1'-0"

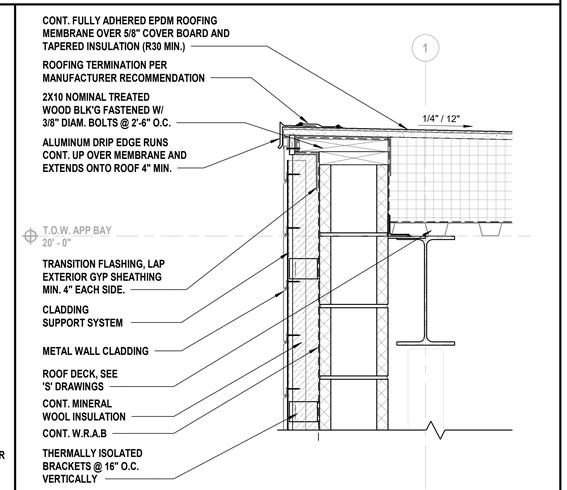

6 **Roof Edge @ Apparatus Bay**
SCALE: 1 1/2" = 1'-0"

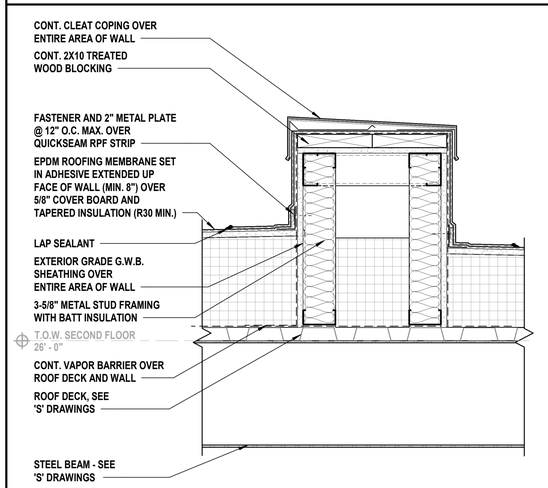

7 **Platform Framed Parapet Detail (EPDM)**
SCALE: 1 1/2" = 1'-0"

C:\Users\akaled\Documents\TRFD2302_Central23-A_AKaled.rvt

2/25/2025 4:06:47 PM

H 2 M architects + engineers

538 Broad Hollow Road, 4th Floor East
Melville, NY 11747
631.756.8000 • www.h2m.com
NY Architecture & Landscape Architecture: No Certificate Required
NY Engineering Certificate of Authorization No.: 0018178

CONSULTANTS:

MARK	DATE	DESCRIPTION

REGISTERED ARCHITECT PATRICK O. STONE STATE OF NEW YORK 039654

10/31/2025
Exp. Date

PATRICK O. STONE, R.A.
NY PROFESSIONAL ARCHITECT Lic. No. 039654

"IN ACCORDANCE WITH ARTICLE 145, SECTION 7209 OF THE NYS EDUCATION LAW, ALTERATION OF THIS DOCUMENT EXCEPT BY A LICENSED PROFESSIONAL IS ILLEGAL"

DESIGNED BY:	DRAWN BY:	CHECKED BY:	REVIEWED BY:
DBS/RLG	ANK	DBS	POS
PROJECT No: TRFD 2302	DATE: FEBRUARY 2025		SCALE: AS SHOWN

CLIENT

THIELLS ROSEVILLE FIRE DISTRICT

NEW 26-100 FIRE HEADQUARTERS

65 W RAMAPO ROAD GARNERVILLE, NY 10923

CONTRACT

CONTRACT G GENERAL CONSTRUCTION

STATUS

FINAL BID DOCUMENT

SHEET TITLE

ROOFING DETAILS

DRAWING No.

A 132.00

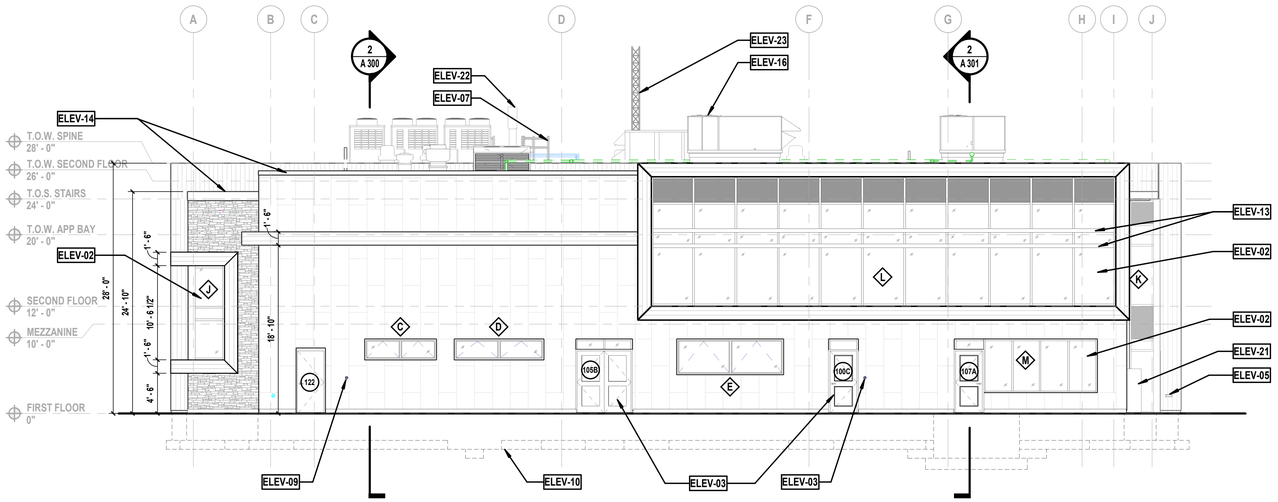

1 South Elevation

SCALE: 1/8" = 1'-0"

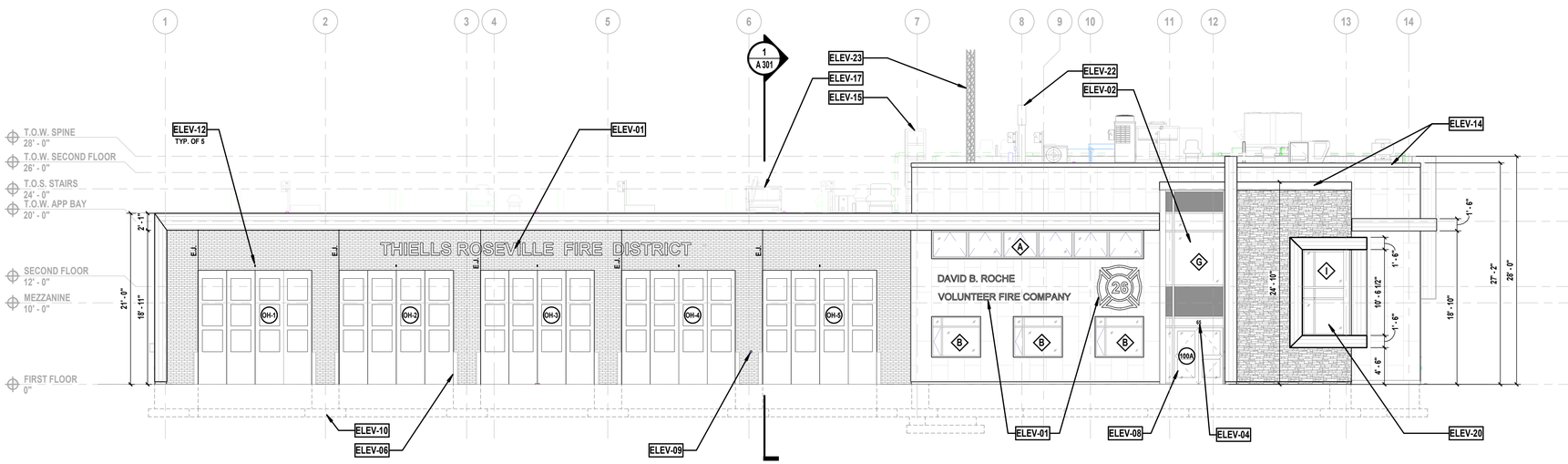

2 West Elevation

SCALE: 1/8" = 1'-0"

MATERIAL LEGEND

	INDICATES AREA OF MASONRY CAVITY WALL CONSTRUCTION TO INCLUDE A BRICK VENEER OVER A CMU BACKUP. BRICK VENEER COLOR AND BOND TYPE TO BE SELECTED BY OWNER/ARCHITECT, SEE WALL TYPES FOR ADDITIONAL INFORMATION
	INDICATES AREA OF CEMENTITIOUS PANEL, COLOR AND STYLE TO BE DETERMINED IN FIELD BY OWNER/ARCHITECT, SEE WALL TYPES FOR ADDITIONAL INFORMATION
	INDICATES AREA OF ADHERED MANUFACTURED STONE VENEER. COLOR AND STYLE TO BE DETERMINED IN FIELD BY OWNER/ARCHITECT, SEE WALL TYPES FOR ADDITIONAL INFORMATION
	INDICATES AREA OF METAL WALL CLADDING. COLOR & STYLE TO BE DETERMINED BY OWNER/ARCHITECT, SEE WALL TYPES FOR ADDITIONAL INFORMATION

ELEVATION KEYNOTE LEGEND

KEYNOTE	DESCRIPTION
ELEV-01	EXTERIOR BUILDING MOUNTED SIGNAGE, REFER TO SIGNAGE DETAILS.
ELEV-02	CURTAIN WALL GLAZING SYSTEM, REFER TO DETAILS.
ELEV-03	STOREFRONT GLAZING SYSTEM, REFER TO DETAILS.
ELEV-04	CURTAIN WALL MOUNTED BUILDING ADDRESS SIGNAGE. 8" LETTERS, FONT TO BE SELECTED BY OWNER.
ELEV-05	RECESSED WALL MOUNTED LIGHT FIXTURE, COORDINATE WITH CONTRACT 'E' FOR ADDITIONAL INFORMATION.
ELEV-06	6" DIAMETER PAINTED PIPE BOLLARDS, REFER TO CIVIL DRAWINGS FOR ADDITIONAL DETAILS.
ELEV-07	STAINLESS STEEL CHANNEL SUPPORT, BY CONTRACT 'E'.
ELEV-08	ALUMINUM AND GLASS ENTRY DOORS, SEE DOOR SCHEDULE FOR ADDITIONAL INFORMATION.
ELEV-09	FROST PROOF HOSE BIB, COORDINATE WITH CONTRACT 'P'.
ELEV-10	P.C. FOUNDATIONS AND FOOTINGS, REFER TO STRUCTURAL DRAWINGS FOR ADDITIONAL INFORMATION.
ELEV-11	LOUVER PROVIDED BY CONTRACT 'M', INSTALLED BY CONTRACT 'G'.
ELEV-12	PROVIDE AND INSTALL 4-EYEHOOKS SECURED INTO MASONRY BRICK VENEER AT OVERHEAD DOORS, TYP. OF 5 LOCATIONS. FINAL LOCATIONS TO BE COORDINATED IN FIELD WITH ARCHITECT/OWNER.
ELEV-13	SOLAR SUNSHADE, PROVIDED AND INSTALLED BY CONTRACT 'G'.
ELEV-14	ALUMINUM FASCIA, REFER TO ROOF DETAILS FOR ADDITIONAL INFORMATION.
ELEV-15	ROOF LADDER, SEE ROOF PLAN FOR ADDITIONAL INFORMATION.
ELEV-16	MECHANICAL EQUIPMENT - REFER TO MECHANICAL DRAWINGS FOR ADDITIONAL INFORMATION.
ELEV-17	ROOF HATCH, SEE ROOF PLAN FOR ADDITIONAL INFORMATION.
ELEV-18	EXTERIOR LIGHT FIXTURE, BY CONTRACT 'E'.
ELEV-19	GAS METER AND PIPING, BY CONTRACT 'P'.
ELEV-20	ELECTRICAL METER, BY CONTRACT 'E'.
ELEV-21	CURRENT TRANSFORMER (CT) CABINET BY CONTRACT 'E'.
ELEV-22	POLE MOUNTED SIREN, PROVIDED BY OWNER, INSTALLED BY CONTRACT 'G'.
ELEV-23	ROOF MOUNTED RADIO TOWER, PROVIDED BY OWNER, CONTRACT 'G' TO COORDINATE FINAL INSTALL.
ELEV-24	FIRE DEPARTMENT CONNECTION, REFER TO FIRE PROTECTION DRAWINGS.

H2M architects + engineers

538 Broad Hollow Road, 4th Floor East
Melville, NY 11747
631.756.8000 • www.h2m.com
NY Architecture & Landscape Architecture: No Certificate Required
NY Engineering Certificate of Authorization No.: 0018178

CONSULTANTS:

MARK	DATE	DESCRIPTION

REGISTERED ARCHITECT PATRICK O. STONE 039654 STATE OF NEW YORK

10/31/2025
Exp. Date

PATRICK O. STONE, R.A.
NY PROFESSIONAL ARCHITECT Lic. No. 039654

"IN ACCORDANCE WITH ARTICLE 145, SECTION 7209 OF THE NYS EDUCATION LAW, ALTERATION OF THIS DOCUMENT EXCEPT BY A LICENSED PROFESSIONAL IS ILLEGAL."

DESIGNED BY:	DRAWN BY:	CHECKED BY:	REVIEWED BY:
DBS/RLG	ANK/KAP	DBS	POS

PROJECT No:	DATE:	SCALE:
TRFD 2302	FEBRUARY 2025	AS SHOWN

CLIENT

THIELLS ROSEVILLE FIRE DISTRICT

NEW 26-100 FIRE HEADQUARTERS

THIELLS 26 FD

65 W RAMAPO ROAD
GARNERVILLE, NY 10923

CONTRACT

CONTRACT G
GENERAL CONSTRUCTION

STATUS

FINAL BID DOCUMENT

SHEET TITLE

BUILDING ELEVATIONS

DRAWING No.

A 200.00

C:\Users\akaled\Documents\TRFD2302_Central23-A_AKaled.rvt
2/25/2025 4:07:03 PM

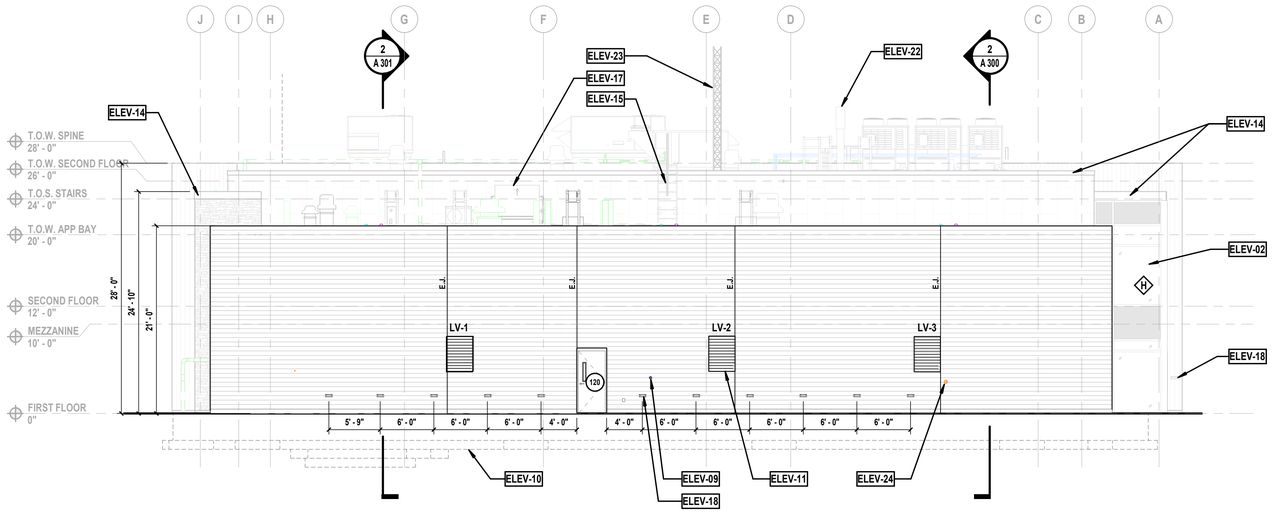

1 **North Elevation**
SCALE: 1/8" = 1'-0"

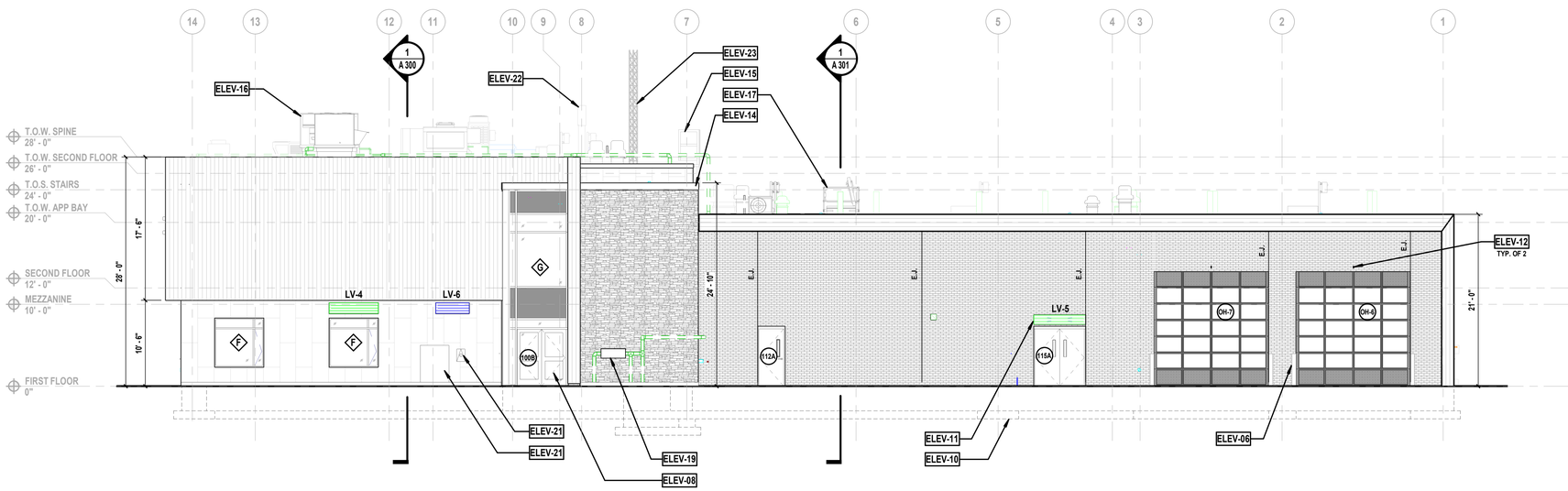

2 **East Elevation**
SCALE: 1/8" = 1'-0"

MATERIAL LEGEND

	INDICATES AREA OF MASONRY CAVITY WALL CONSTRUCTION TO INCLUDE A BRICK VENEER OVER A CMU BACKUP. BRICK VENEER COLOR AND BOND TYPE TO BE SELECTED BY OWNER/ARCHITECT, SEE WALL TYPES FOR ADDITIONAL INFORMATION
	INDICATES AREA OF CEMENTITIOUS PANEL, COLOR AND STYLE TO BE DETERMINED IN FIELD BY OWNER/ARCHITECT, SEE WALL TYPES FOR ADDITIONAL INFORMATION
	INDICATES AREA OF ADHERED MANUFACTURED STONE VENEER. COLOR AND STYLE TO BE DETERMINED IN FIELD BY OWNER/ARCHITECT, SEE WALL TYPES FOR ADDITIONAL INFORMATION
	INDICATES AREA OF METAL WALL CLADDING. COLOR & STYLE TO BE DETERMINED BY OWNER/ARCHITECT, SEE WALL TYPES FOR ADDITIONAL INFORMATION

ELEVATION KEYNOTE LEGEND

KEYNOTE	DESCRIPTION
ELEV-01	EXTERIOR BUILDING MOUNTED SIGNAGE, REFER TO SIGNAGE DETAILS.
ELEV-02	CURTAIN WALL GLAZING SYSTEM, REFER TO DETAILS.
ELEV-03	STOREFRONT GLAZING SYSTEM, REFER TO DETAILS.
ELEV-04	CURTAIN WALL MOUNTED BUILDING ADDRESS SIGNAGE. 8" LETTERS, FONT TO BE SELECTED BY OWNER.
ELEV-05	RECESSED WALL MOUNTED LIGHT FIXTURE, COORDINATE WITH CONTRACT 'E' FOR ADDITIONAL INFORMATION.
ELEV-06	6" DIAMETER PAINTED PIPE BOLLARDS, REFER TO CIVIL DRAWINGS FOR ADDITIONAL DETAILS.
ELEV-07	STAINLESS STEEL CHANNEL SUPPORT, BY CONTRACT 'E'.
ELEV-08	ALUMINUM AND GLASS ENTRY DOORS, SEE DOOR SCHEDULE FOR ADDITIONAL INFORMATION.
ELEV-09	FROST PROOF HOSE BIB, COORDINATE WITH CONTRACT 'P'.
ELEV-10	P.C. FOUNDATIONS AND FOOTINGS, REFER TO STRUCTURAL DRAWINGS FOR ADDITIONAL INFORMATION.
ELEV-11	LOUVER PROVIDED BY CONTRACT 'M', INSTALLED BY CONTRACT 'G'.
ELEV-12	PROVIDE AND INSTALL 4-EYEHOOKS SECURED INTO MASONRY BRICK VENEER AT OVERHEAD DOORS, TYP. OF 5 LOCATIONS. FINAL LOCATIONS TO BE COORDINATED IN FIELD WITH ARCHITECT/OWNER.
ELEV-13	SOLAR SUNSHADE, PROVIDED AND INSTALLED BY CONTRACT 'G'.
ELEV-14	ALUMINUM FASCIA, REFER TO ROOF DETAILS FOR ADDITIONAL INFORMATION.
ELEV-15	ROOF LADDER, SEE ROOF PLAN FOR ADDITIONAL INFORMATION.
ELEV-16	MECHANICAL EQUIPMENT - REFER TO MECHANICAL DRAWINGS FOR ADDITIONAL INFORMATION.
ELEV-17	ROOF HATCH, SEE ROOF PLAN FOR ADDITIONAL INFORMATION.
ELEV-18	EXTERIOR LIGHT FIXTURE, BY CONTRACT 'E'.
ELEV-19	GAS METER AND PIPING, BY CONTRACT 'P'.
ELEV-20	ELECTRICAL METER, BY CONTRACT 'E'.
ELEV-21	CURRENT TRANSFORMER (CT) CABINET BY CONTRACT 'E'.
ELEV-22	POLE MOUNTED SIREN, PROVIDED BY OWNER, INSTALLED BY CONTRACT 'G'.
ELEV-23	ROOF MOUNTED RADIO TOWER, PROVIDED BY OWNER, CONTRACT 'G' TO COORDINATE FINAL INSTALL.
ELEV-24	FIRE DEPARTMENT CONNECTION, REFER TO FIRE PROTECTION DRAWINGS.

H2M architects + engineers
538 Broad Hollow Road, 4th Floor East
Melville, NY 11747
631.756.8000 • www.h2m.com
NY Architecture & Landscape Architecture: No Certificate Required
NY Engineering Certificate of Authorization No.: 0018178

CONSULTANTS:

MARK	DATE	DESCRIPTION

REGISTERED ARCHITECT PATRICK O. STONE 039654 STATE OF NEW YORK

10/31/2025
Exp. Date

PATRICK O. STONE, R.A.
NY PROFESSIONAL ARCHITECT Lic. No. 039654

"IN ACCORDANCE WITH ARTICLE 145, SECTION 7209 OF THE NYS EDUCATION LAW, ALTERATION OF THIS DOCUMENT EXCEPT BY A LICENSED PROFESSIONAL IS ILLEGAL"

DESIGNED BY:	DRAWN BY:	CHECKED BY:	REVIEWED BY:
DBS/RLG	ANK	DBS	POS
PROJECT No: TRFD 2302	DATE: FEBRUARY 2025	SCALE: AS SHOWN	

CLIENT

THIELLS ROSEVILLE FIRE DISTRICT

NEW 26-100 FIRE HEADQUARTERS

THIELLS 26 FD

65 W RAMAPO ROAD GARNERVILLE, NY 10923

CONTRACT

CONTRACT G GENERAL CONSTRUCTION

STATUS

FINAL BID DOCUMENT

SHEET TITLE

BUILDING ELEVATIONS

DRAWING No.

A 201.00

C:\Users\akaled\Documents\TRFD2302_Central23-A_AKaled.rvt
2/25/2025 4:07:17 PM

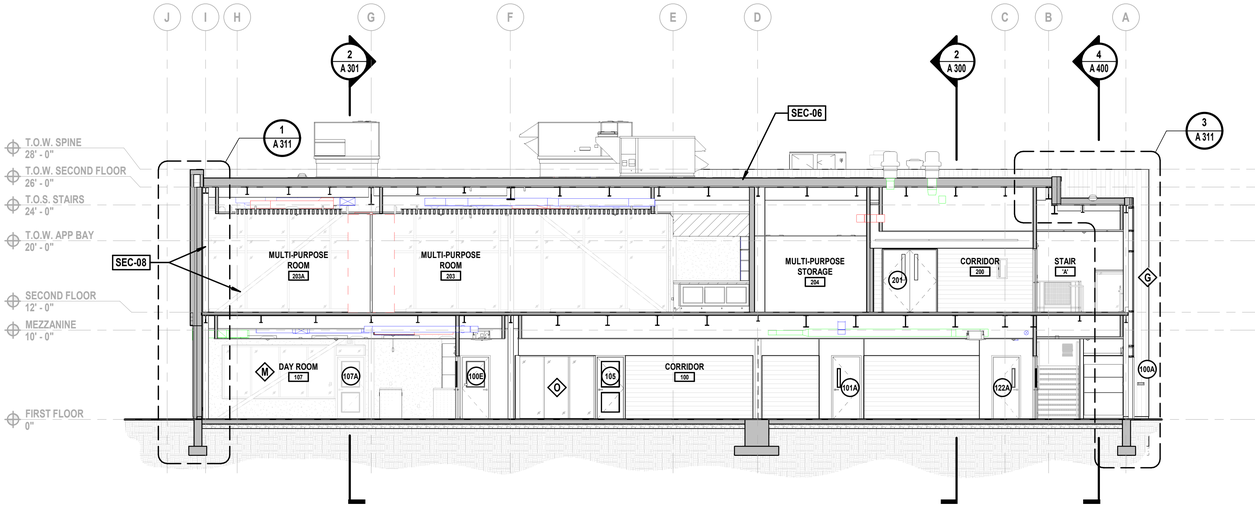

1 **Building Section**
SCALE: 1/8" = 1'-0"

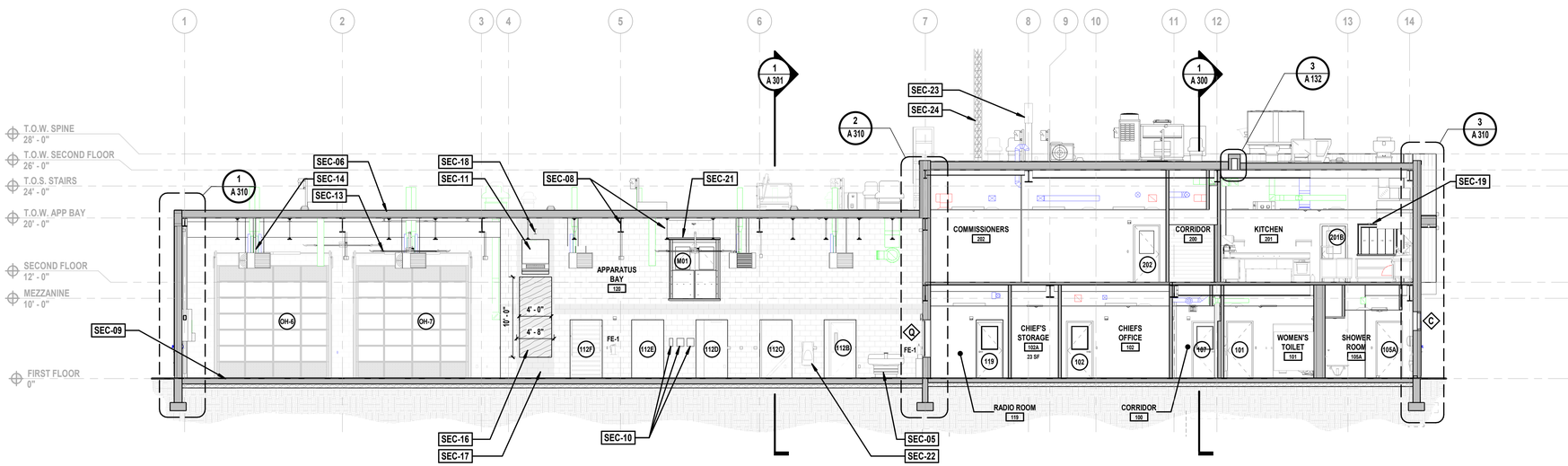

2 **Building Section**
SCALE: 1/8" = 1'-0"

BUILDING SECTION KEYNOTE LEGEND

KEYNOTE	DESCRIPTION
SEC-01	MASONRY CAVITY WALL WITH BRICK VENEER - STYLE/COLOR TO BE SELECTED IN FIELD BY ARCHITECT.
SEC-02	FOUR-FOLD DOOR, REFER TO DOOR SCHEDULE AND DETAILS FOR ADDITIONAL INFORMATION.
SEC-04	SUSPENDED CEILING, REFER TO RCP FOR ADDITIONAL INFORMATION.
SEC-05	WASHFOUNTAIN PROVIDED AND INSTALLED BY CONTRACT 'P', REFER TO 'P' DRAWINGS.
SEC-06	EPDM ROOFING MEMBRANE SET IN ADHESIVE EXTENDED UP FACE OF WALL (MIN. 12") OVER 5/8" COVER BOARD AND TAPERED INSULATION (R30 MIN.), REFER TO ROOF PLAN FOR ADDITIONAL INFORMATION.
SEC-07	ELEVATOR PIT, REFER TO MANUFACTURER'S SPECIFICATIONS.
SEC-08	EXPOSED STRUCTURAL STEEL, PAINT - TYP.
SEC-09	CONCRETE SLAB ON GRADE, SEE 'S' DRAWINGS FOR ADDITIONAL INFORMATION.
SEC-10	GAS DETECTION SYSTEM BY CONTRACT 'M', REFER TO 'M' DRAWINGS FOR ADDITIONAL INFORMATION.
SEC-11	BAILOUT TRAINING WINDOW, BULLNOSE ALL CORNERS AT PERIMETER OF WINDOW.
SEC-12	OPENING GUARD BEYOND.
SEC-13	HVLS FAN PROVIDED AND INSTALLED BY CONTRACT 'M', SEE 'M' DRAWINGS FOR ADDITIONAL INFORMATION.
SEC-14	GAS HEATER PROVIDED AND INSTALLED BY CONTRACT 'M', SEE 'M' DRAWINGS FOR ADDITIONAL INFORMATION.
SEC-15	ALUMINUM SHIPS STAIR LADDER TO ROOF HATCH, REFER TO SPECIFICATION FOR ADDITIONAL INFORMATION.
SEC-16	3/4" PLYWOOD FASTENED TO CMU - PAINT TO MATCH WALL.
SEC-17	PROVIDE ACCENT COLOR @ BAILOUT LOCATION.
SEC-18	TIE-OFF POINT, REFER TO DETAILS AND 'S' DRAWINGS.
SEC-19	PASS-THRU WINDOW.
SEC-20	EXTERIOR ALUMINUM SUNSHADE.
SEC-21	SAFETY GATE, REFER TO DOOR DETAILS FOR ADDITIONAL INFORMATION.
SEC-22	EMERGENCY EYE WASH STATION PROVIDED AND INSTALLED BY CONTRACT 'G'.
SEC-23	POLE MOUNTED SIREN, PROVIDED BY OWNER, INSTALLED BY CONTRACT 'G'.
SEC-24	ROOF MOUNTED RADIO TOWER, PROVIDED BY OWNER, CONTRACT 'G' TO COORDINATE FINAL INSTALL.

H2M architects + engineers

538 Broad Hollow Road, 4th Floor East
Melville, NY 11747
631.756.8000 • www.h2m.com
NY Architecture & Landscape Architecture: No Certificate Required
NY Engineering Certificate of Authorization No.: 0018178

CONSULTANTS:

MARK	DATE	DESCRIPTION

REGISTERED ARCHITECT PATRICK O. STONE STATE OF NEW YORK 0396654

10/31/2025
Exp. Date

PATRICK O. STONE, R.A.
NY PROFESSIONAL ARCHITECT Lic. No. 036654

"IN ACCORDANCE WITH ARTICLE 145, SECTION 7209 OF THE NYS EDUCATION LAW, ALTERATION OF THIS DOCUMENT EXCEPT BY A LICENSED PROFESSIONAL IS ILLEGAL."

DESIGNED BY:	DRAWN BY:	CHECKED BY:	REVIEWED BY:
DBS/RLG	ANK	DBS	POS
PROJECT No: TRFD 2302	DATE: FEBRUARY 2025	SCALE: AS SHOWN	

CLIENT

THIELLS ROSEVILLE FIRE DISTRICT

NEW 26-100 FIRE HEADQUARTERS

THIELLS 26 FD

65 W RAMAPO ROAD
GARNERVILLE, NY 10923

CONTRACT

CONTRACT G
GENERAL CONSTRUCTION

STATUS

FINAL BID DOCUMENT

SHEET TITLE

BUILDING SECTIONS

DRAWING No.

A 300.00

C:\Users\akaled\Documents\TRFD2302_Central23-A_AKaled.rvt

2/25/2025 4:07:24 PM

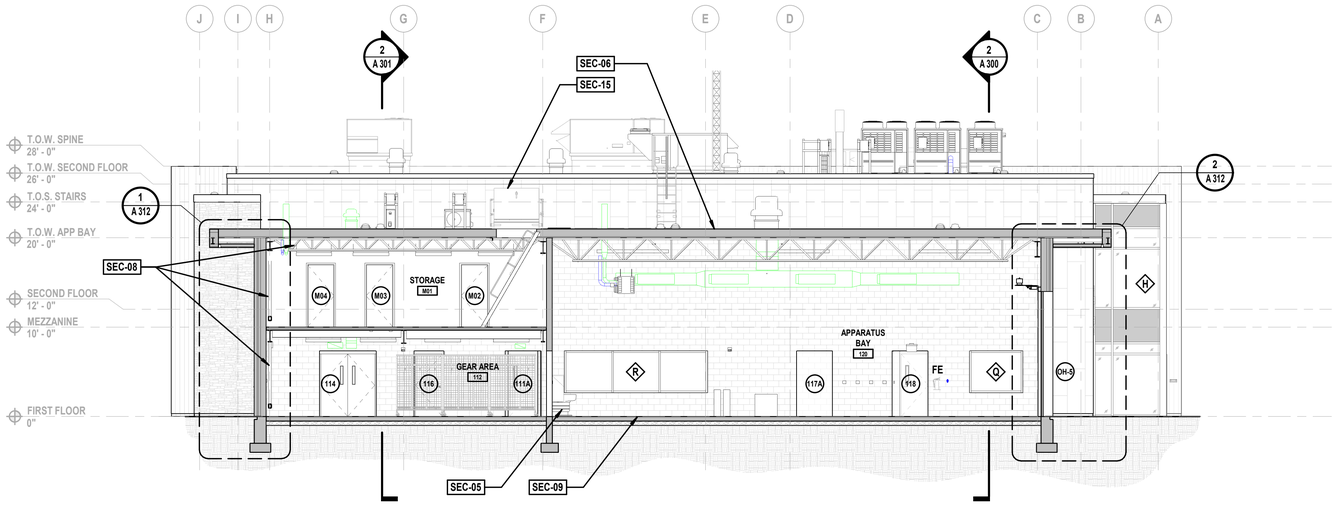

1 Building Section

SCALE: 1/8" = 1'-0"

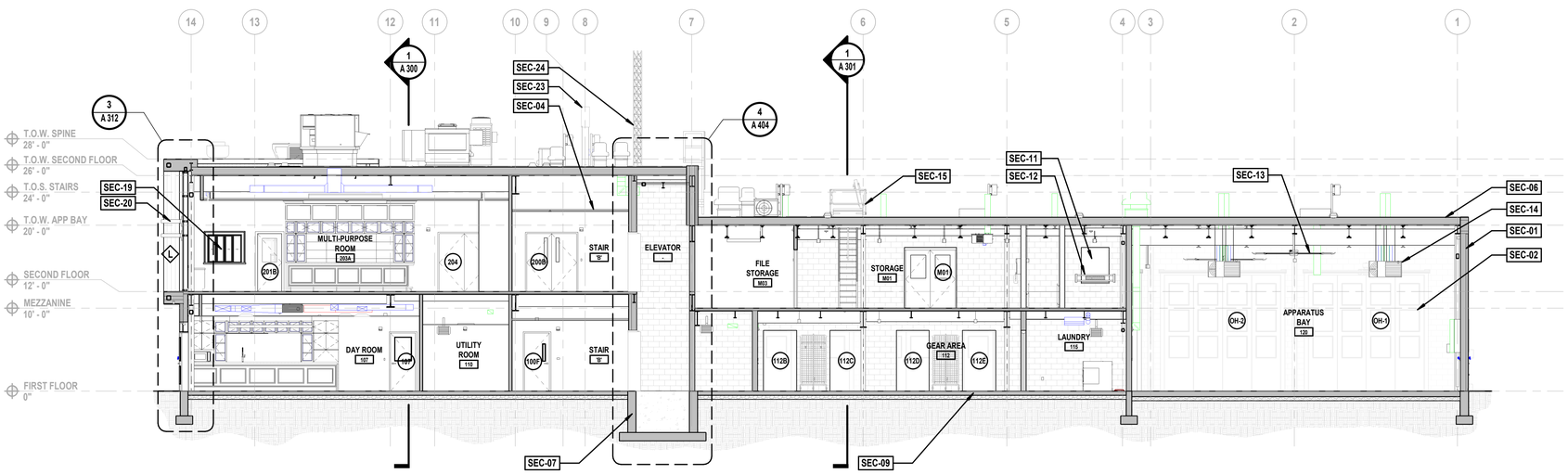

2 Building Section

SCALE: 1/8" = 1'-0"

BUILDING SECTION KEYNOTE LEGEND

KEYNOTE	DESCRIPTION
SEC-01	MASONRY CAVITY WALL WITH BRICK VENEER - STYLE/COLOR TO BE SELECTED IN FIELD BY ARCHITECT.
SEC-02	FOUR-FOLD DOOR, REFER TO DOOR SCHEDULE AND DETAILS FOR ADDITIONAL INFORMATION.
SEC-04	SUSPENDED CEILING, REFER TO RCP FOR ADDITIONAL INFORMATION.
SEC-05	WASHFOUNTAIN PROVIDED AND INSTALLED BY CONTRACT 'P', REFER TO 'P' DRAWINGS.
SEC-06	EPDM ROOFING MEMBRANE SET IN ADHESIVE EXTENDED UP FACE OF WALL (MIN. 12") OVER 5/8" COVER BOARD AND TAPERED INSULATION (R30 MIN.), REFER TO ROOF PLAN FOR ADDITIONAL INFORMATION.
SEC-07	ELEVATOR PIT, REFER TO MANUFACTURER'S SPECIFICATIONS.
SEC-08	EXPOSED STRUCTURAL STEEL, PAINT - TYP.
SEC-09	CONCRETE SLAB ON GRADE, SEE 'S' DRAWINGS FOR ADDITIONAL INFORMATION.
SEC-10	GAS DETECTION SYSTEM BY CONTRACT 'M', REFER TO 'M' DRAWINGS FOR ADDITIONAL INFORMATION.
SEC-11	BAILOUT TRAINING WINDOW, BULLNOSE ALL CORNERS AT PERIMETER OF WINDOW.
SEC-12	OPENING GUARD BEYOND.
SEC-13	HVLS FAN PROVIDED AND INSTALLED BY CONTRACT 'M', SEE 'M' DRAWINGS FOR ADDITIONAL INFORMATION.
SEC-14	GAS HEATER PROVIDED AND INSTALLED BY CONTRACT 'M', SEE 'M' DRAWINGS FOR ADDITIONAL INFORMATION.
SEC-15	ALUMINUM SHIPS STAIR LADDER TO ROOF HATCH, REFER TO SPECIFICATION FOR ADDITIONAL INFORMATION.
SEC-16	3/4" PLYWOOD FASTENED TO CMU - PAINT TO MATCH WALL.
SEC-17	PROVIDE ACCENT COLOR @ BAILOUT LOCATION.
SEC-18	TIE-OFF POINT, REFER TO DETAILS AND 'S' DRAWINGS.
SEC-19	PASS-THRU WINDOW.
SEC-20	EXTERIOR ALUMINUM SUNSHADE.
SEC-21	SAFETY GATE, REFER TO DOOR DETAILS FOR ADDITIONAL INFORMATION.
SEC-22	EMERGENCY EYE WASH STATION PROVIDED AND INSTALLED BY CONTRACT 'G'.
SEC-23	POLE MOUNTED SIREN, PROVIDED BY OWNER, INSTALLED BY CONTRACT 'G'.
SEC-24	ROOF MOUNTED RADIO TOWER, PROVIDED BY OWNER, CONTRACT 'G' TO COORDINATE FINAL INSTALL.

H2M architects + engineers

538 Broad Hollow Road, 4th Floor East
Melville, NY 11747
631.756.8000 • www.h2m.com
NY Architecture & Landscape Architecture: No Certificate Required
NY Engineering Certificate of Authorization No.: 0018178

CONSULTANTS:

MARK	DATE	DESCRIPTION

REGISTERED ARCHITECT PATRICK O. STONE 0396654 STATE OF NEW YORK

10/31/2025
Exp. Date

PATRICK O. STONE, R.A.
NY PROFESSIONAL ARCHITECT Lic. No. 036654

"IN ACCORDANCE WITH ARTICLE 145, SECTION 7209 OF THE NYS EDUCATION LAW, ALTERATION OF THIS DOCUMENT EXCEPT BY A LICENSED PROFESSIONAL IS ILLEGAL."

DESIGNED BY:	DRAWN BY:	CHECKED BY:	REVIEWED BY:
DBS/RLG	ANK	DBS	POS
PROJECT No: TRFD 2302	DATE: FEBRUARY 2025	SCALE: AS SHOWN	

CLIENT

THIELLS ROSEVILLE FIRE DISTRICT

NEW 26-100 FIRE HEADQUARTERS

THIELLS 26 FD

65 W RAMAPO ROAD
GARNERVILLE, NY 10923

CONTRACT

CONTRACT G
GENERAL CONSTRUCTION

STATUS

FINAL BID DOCUMENT

SHEET TITLE

BUILDING SECTIONS

DRAWING No.

A 301.00

C:\Users\akaled\Documents\TRFD2302_Central23-A_AKaled.rvt

2/25/2025 4:07:32 PM

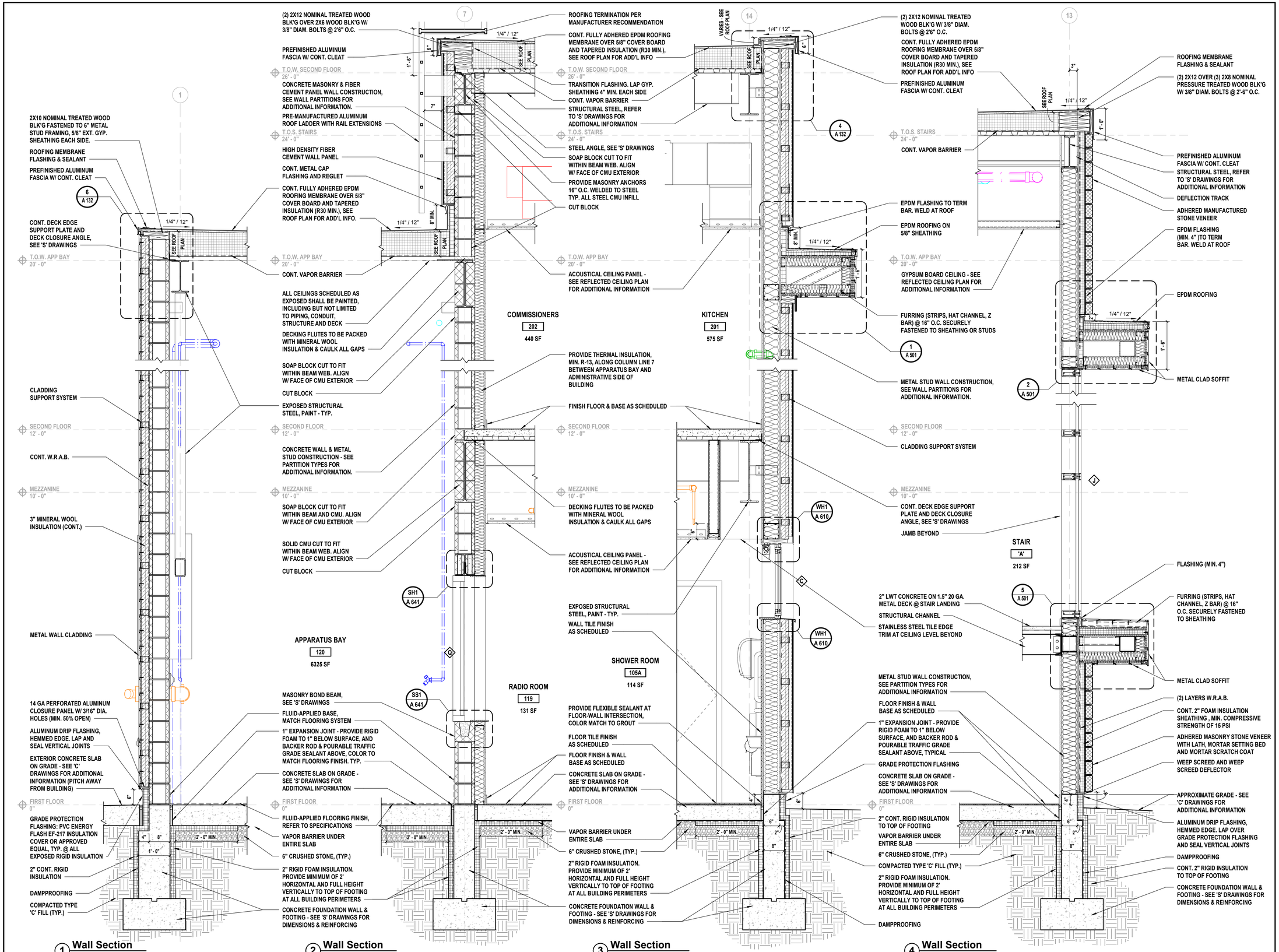

H2M architects + engineers

538 Broad Hollow Road, 4th Floor East
Melville, NY 11747
631.756.8000 • www.h2m.com
NY Architecture & Landscape Architecture: No Certificate Required
NY Engineering Certificate of Authorization No.: 0018178

CONSULTANTS:

MARK	DATE	DESCRIPTION

REGISTERED ARCHITECT PATRICK O. STONE 0396654 STATE OF NEW YORK

10/31/2025
Exp. Date

PATRICK O. STONE, R.A.
NY PROFESSIONAL ARCHITECT Lic. No. 036654

"IN ACCORDANCE WITH ARTICLE 145, SECTION 7209 OF THE NYS EDUCATION LAW, ALTERATION OF THIS DOCUMENT EXCEPT BY A LICENSED PROFESSIONAL IS ILLEGAL."

DESIGNED BY:	DRAWN BY:	CHECKED BY:	REVIEWED BY:
DBS/RLG	KAP/ANK	DBS	POS
PROJECT No: TRFD 2302	DATE: FEBRUARY 2025	SCALE: AS SHOWN	

CLIENT

THIELLS ROSEVILLE FIRE DISTRICT

NEW 26-100 FIRE HEADQUARTERS

THIELLS 26 FD

65 W RAMAPO ROAD
GARNERVILLE, NY 10923

CONTRACT

CONTRACT G
GENERAL CONSTRUCTION

STATUS

FINAL BID DOCUMENT

SHEET TITLE

WALL SECTION

DRAWING No.

A 310.00

C:\Users\akaled\Documents\TRFD2302_Central23-A_AKaled.rvt

2/25/2025 4:07:37 PM

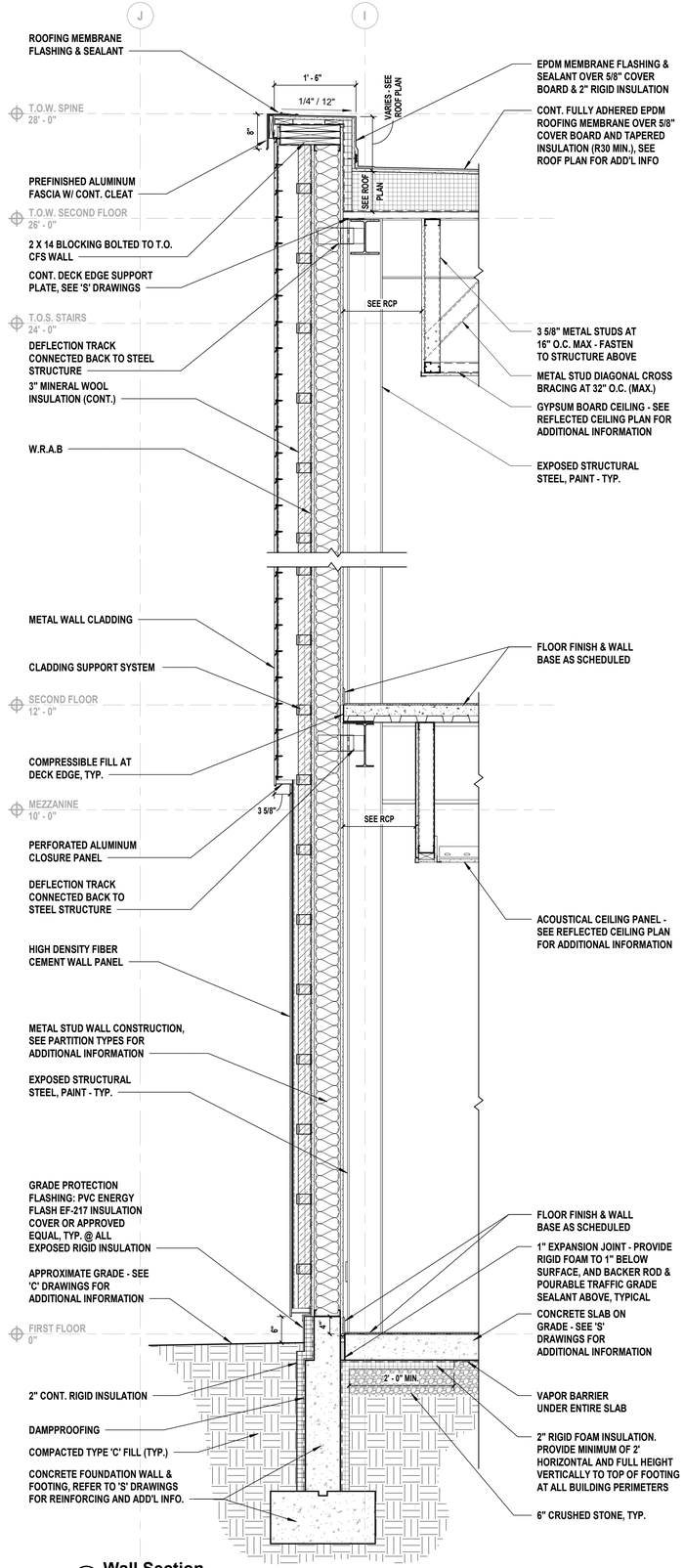

1 **Wall Section**
SCALE: 3/4" = 1'-0"

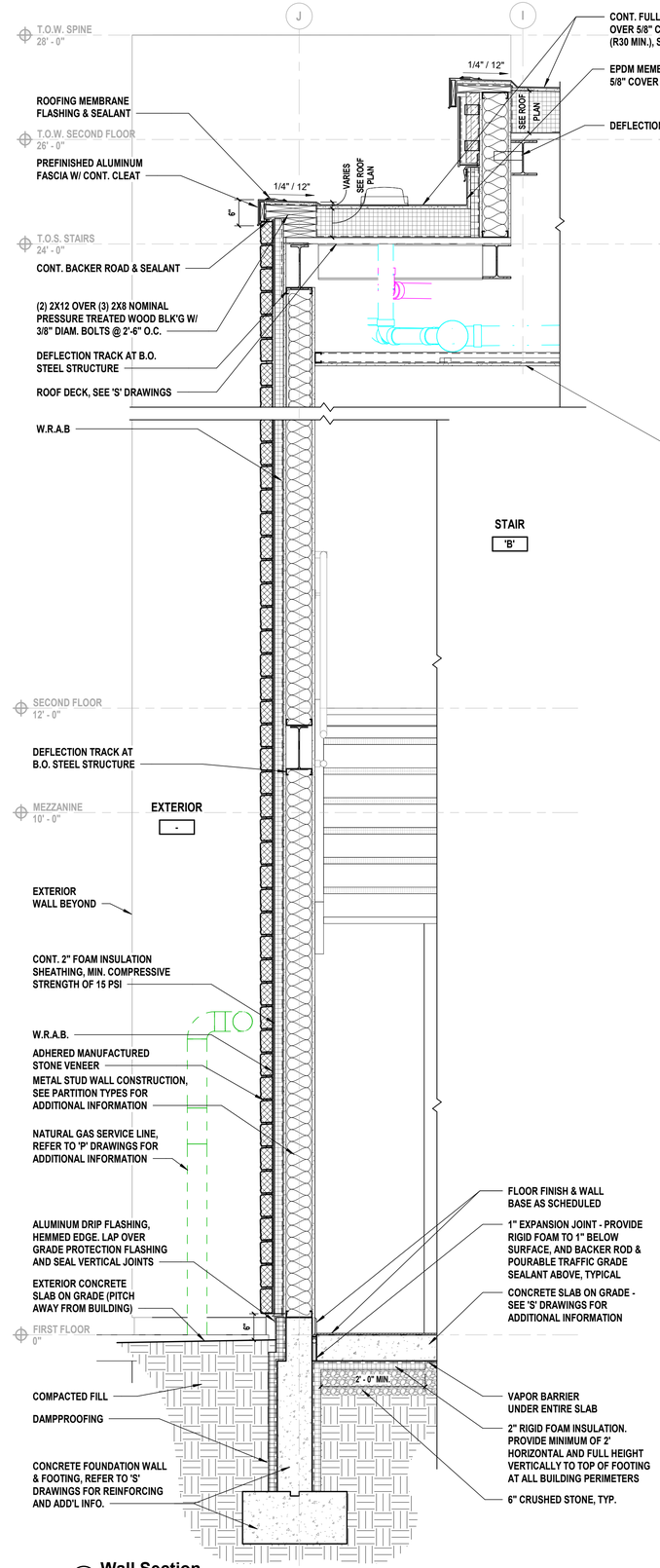

2 **Wall Section**
SCALE: 3/4" = 1'-0"

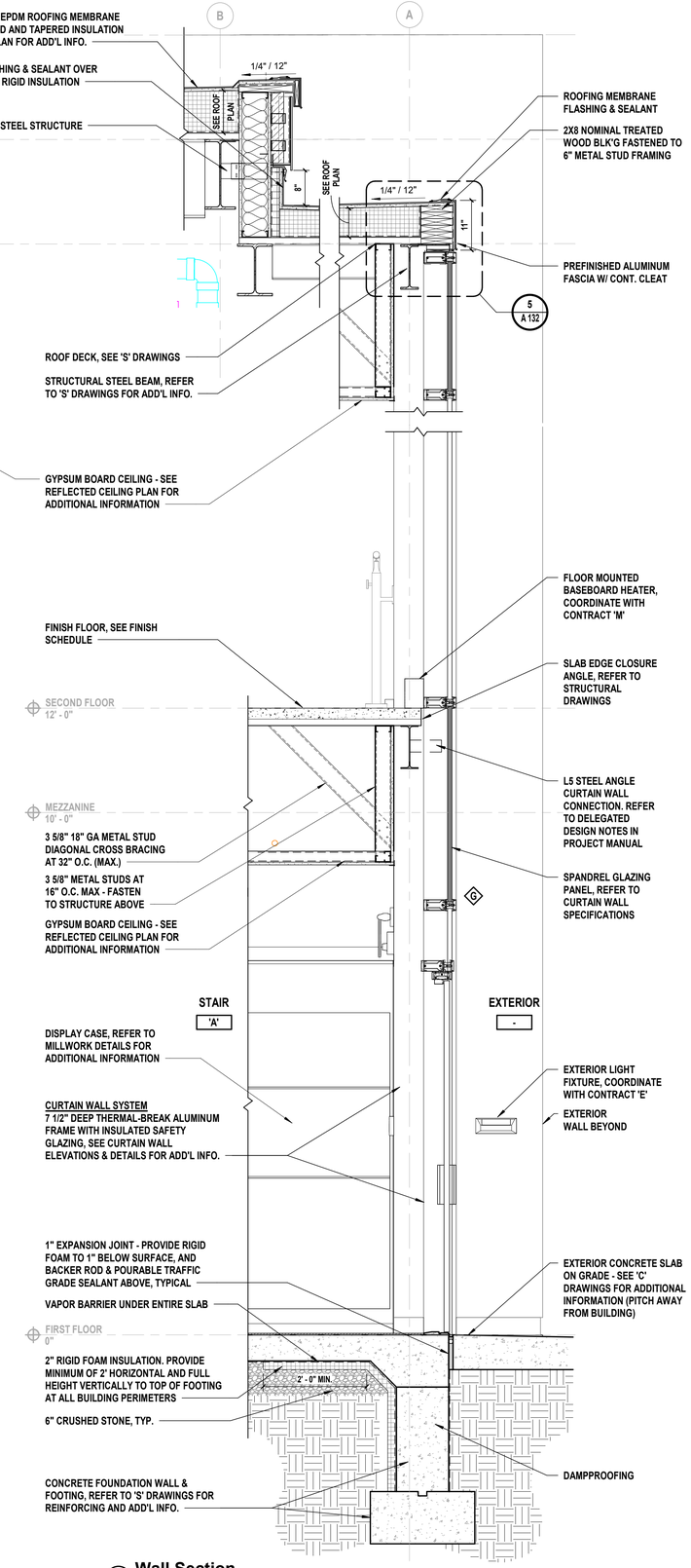

3 **Wall Section**
SCALE: 3/4" = 1'-0"

C:\Users\akalee\Documents\TRFD2302_Central23-A_AKalee.rvt

2/25/2025 4:07:41 PM

H 2 M architects + engineers

538 Broad Hollow Road, 4th Floor East
Melville, NY 11747
631.756.8000 • www.h2m.com
NY Architecture & Landscape Architecture: No Certificate Required
NY Engineering Certificate of Authorization No.: 0018178

CONSULTANTS:

MARK	DATE	DESCRIPTION

REGISTERED ARCHITECT PATRICK O. STONE 039654 STATE OF NEW YORK

10/31/2025
Exp. Date

PATRICK O. STONE, R.A.
NY PROFESSIONAL ARCHITECT Lic. No. 039654

"IN ACCORDANCE WITH ARTICLE 145, SECTION 7209 OF THE NYS EDUCATION LAW, ALTERATION OF THIS DOCUMENT EXCEPT BY A LICENSED PROFESSIONAL IS ILLEGAL."

DESIGNED BY:	DRAWN BY:	CHECKED BY:	REVIEWED BY:
DBS/RLG	ANK	DBS	POS

PROJECT No:	DATE:	SCALE:
TRFD 2302	FEBRUARY 2025	AS SHOWN

CLIENT

THIELLS ROSEVILLE FIRE DISTRICT

NEW 26-100 FIRE HEADQUARTERS

THIELLS 26 FD

65 W RAMAPO ROAD
GARNERVILLE, NY 10923

CONTRACT

CONTRACT G
GENERAL CONSTRUCTION

STATUS

FINAL BID DOCUMENT

SHEET TITLE

WALL SECTION

DRAWING No.

A 311.00

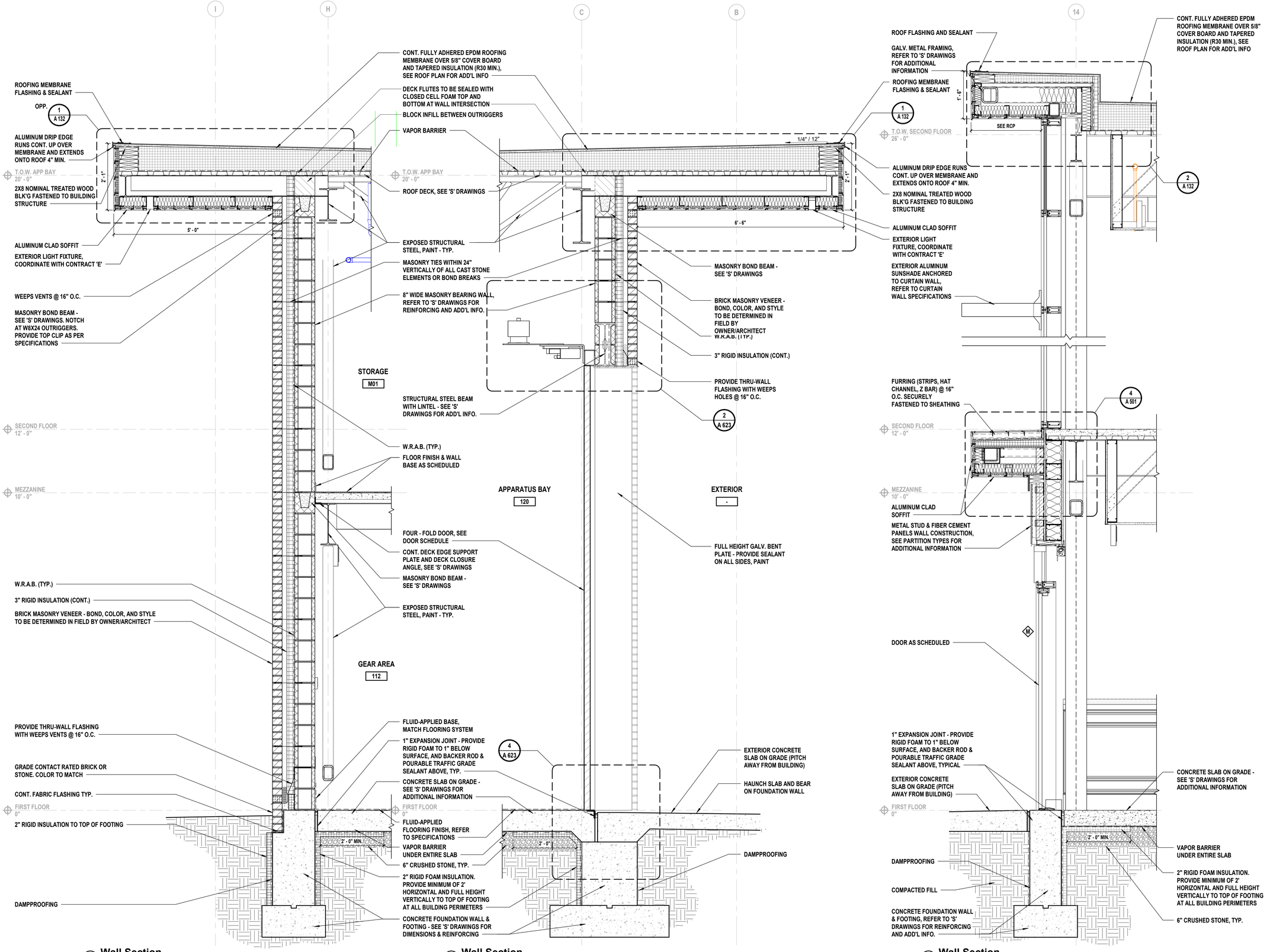

H2M architects + engineers

538 Broad Hollow Road, 4th Floor East
Melville, NY 11747
631.756.8000 • www.h2m.com
NY Architecture & Landscape Architecture: No Certificate Required
NY Engineering Certificate of Authorization No.: 0018178

CONSULTANTS:

MARK	DATE	DESCRIPTION

REGISTERED ARCHITECT PATRICK O. STONE 039654 STATE OF NEW YORK

PATRICK O. STONE, R.A.
NY PROFESSIONAL ARCHITECT Lic. No. 039654

10/31/2025
Exp. Date

"IN ACCORDANCE WITH ARTICLE 145, SECTION 7209 OF THE NYS EDUCATION LAW, ALTERATION OF THIS DOCUMENT EXCEPT BY A LICENSED PROFESSIONAL IS ILLEGAL"

DESIGNED BY:	DRAWN BY:	CHECKED BY:	REVIEWED BY:
DBS/RLG	ANK	DBS	POS

PROJECT No:	DATE:	SCALE:
TRFD 2302	FEBRUARY 2025	AS SHOWN

CLIENT

THIELLS ROSEVILLE FIRE DISTRICT

NEW 26-100 FIRE HEADQUARTERS

THIELLS 26 FD

65 W RAMAPO ROAD
GARNERVILLE, NY 10923

CONTRACT

CONTRACT G
GENERAL CONSTRUCTION

STATUS

FINAL BID DOCUMENT

SHEET TITLE

WALL SECTION

DRAWING No.

A 312.00

C:\Users\akaled\Documents\TRFD2302_Central23-A_AKaled.rvt

2/25/2025 4:07:45 PM

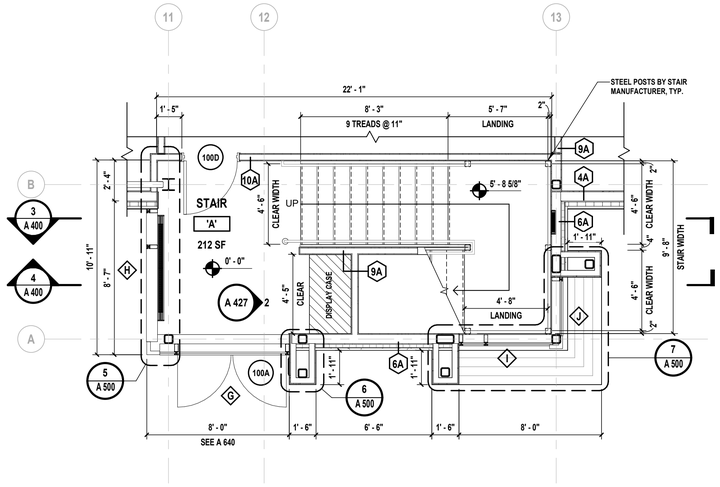

1 Enlarged First Floor Plan - Stair 'A'

SCALE: 1/4" = 1'-0"

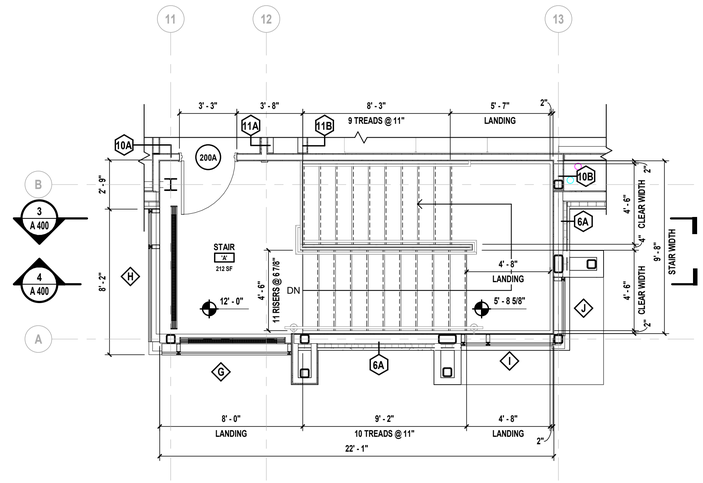

2 Enlarged Second Floor Plan - Stair 'A'

SCALE: 1/4" = 1'-0"

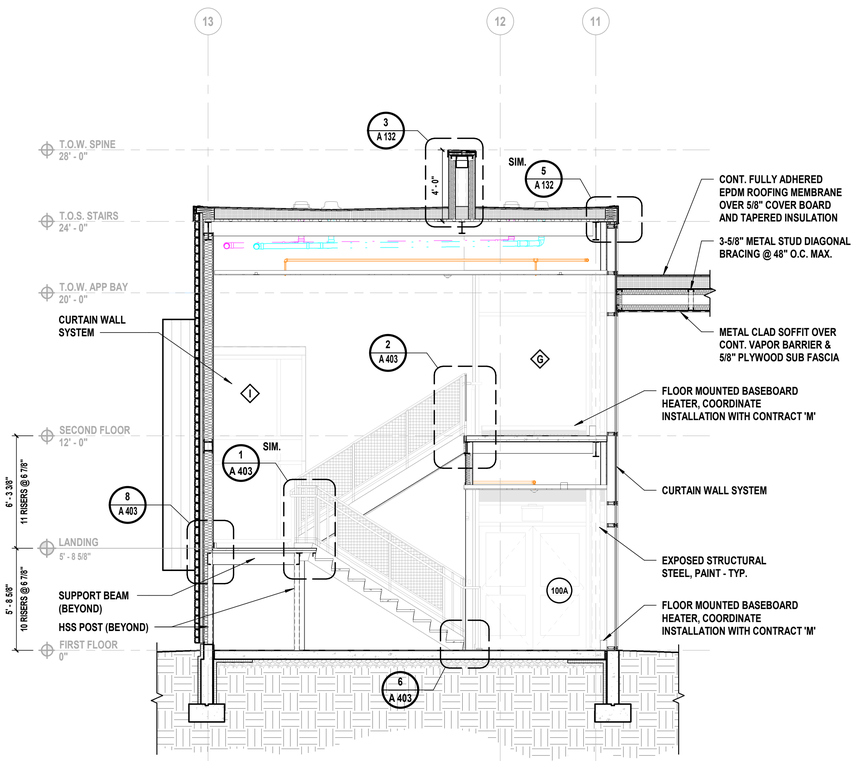

3 Stair 'A' Section

SCALE: 1/4" = 1'-0"

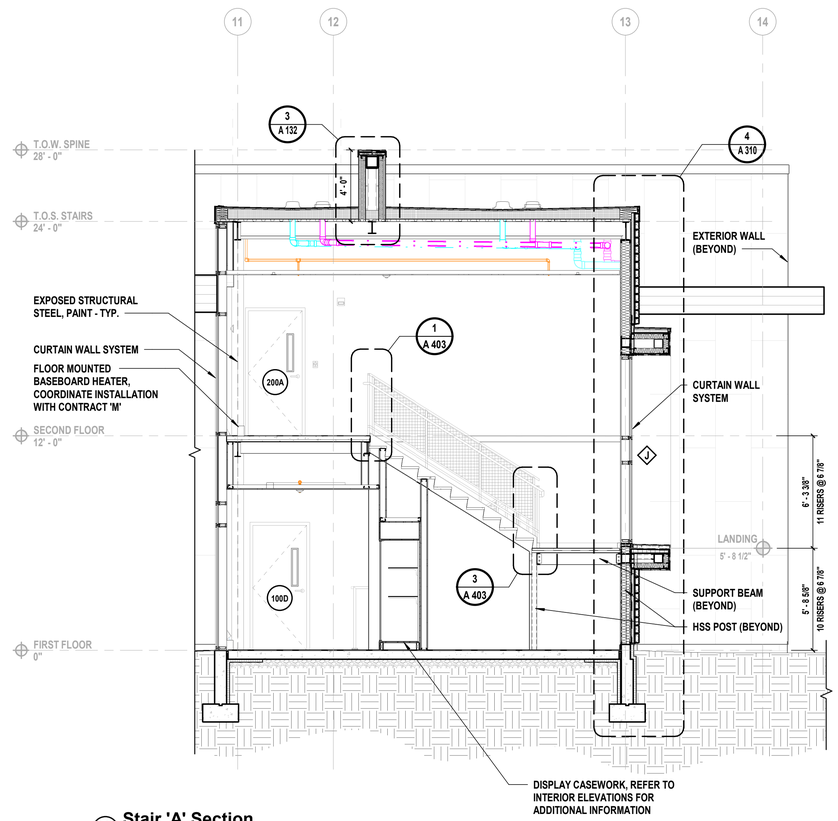

4 Stair 'A' Section

SCALE: 1/4" = 1'-0"

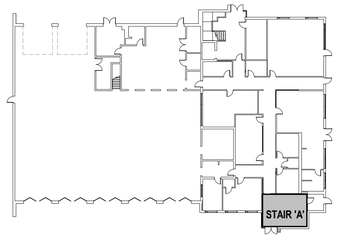

First Floor Key Plan

SCALE: NTS

H2M architects + engineers

538 Broad Hollow Road, 4th Floor East
Melville, NY 11747
631.756.8000 • www.h2m.com
NY Architecture & Landscape Architecture: No Certificate Required
NY Engineering Certificate of Authorization No.: 0018178

CONSULTANTS:

MARK	DATE	DESCRIPTION

REGISTERED ARCHITECT PATRICK O. STONE 039654 STATE OF NEW YORK

10/31/2025
Exp. Date

PATRICK O. STONE, R.A.
NY PROFESSIONAL ARCHITECT Lic. No. 039654

"IN ACCORDANCE WITH ARTICLE 145, SECTION 7209 OF THE NYS EDUCATION LAW, ALTERATION OF THIS DOCUMENT EXCEPT BY A LICENSED PROFESSIONAL IS ILLEGAL"

DESIGNED BY:	DRAWN BY:	CHECKED BY:	REVIEWED BY:
DBS/RLG	ANK	DBS	POS

PROJECT No:	DATE:	SCALE:
TRFD 2302	FEBRUARY 2025	AS SHOWN

CLIENT

THIELLS ROSEVILLE FIRE DISTRICT

NEW 26-100 FIRE HEADQUARTERS

65 W RAMAPO ROAD
GARNERVILLE, NY 10923

CONTRACT

CONTRACT G
GENERAL CONSTRUCTION

STATUS

FINAL BID DOCUMENT

SHEET TITLE

ENLARGED STAIR 'A' PLAN AND SECTIONS

DRAWING No.

A 400.00

C:\Users\akiled\Documents\TRFD2302_Central23-A_AKiled.rvt

2/25/2025 4:07:49 PM

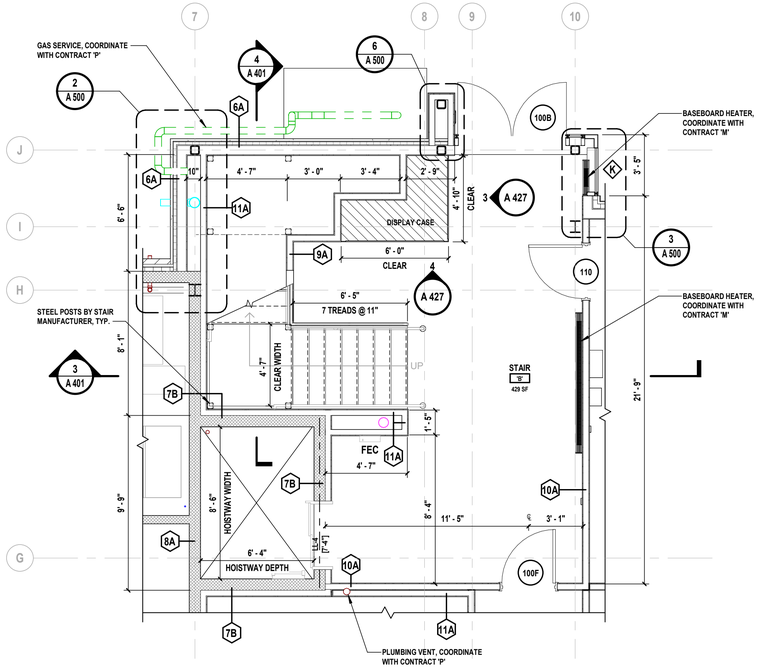

1 Enlarged First Floor Plan - Stair 'B'

SCALE: 1/4" = 1'-0"

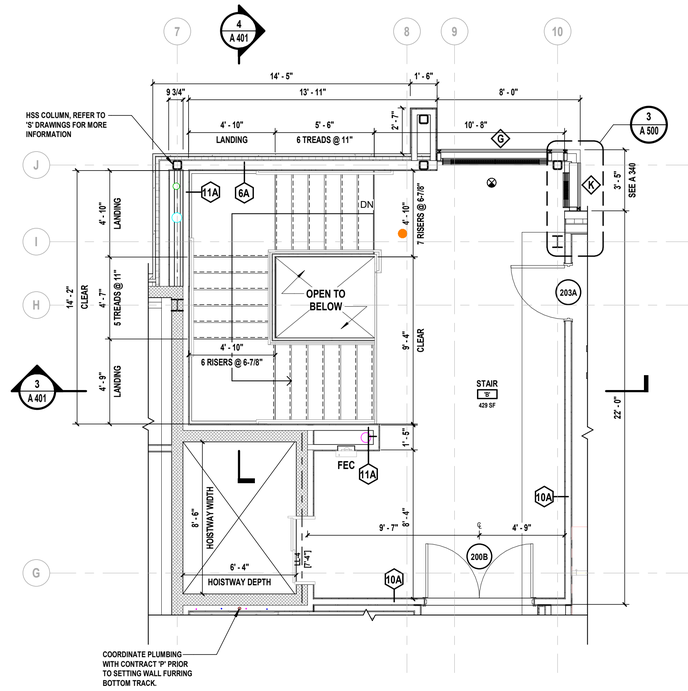

2 Enlarged Second Floor Plan - Stair 'B'

SCALE: 1/4" = 1'-0"

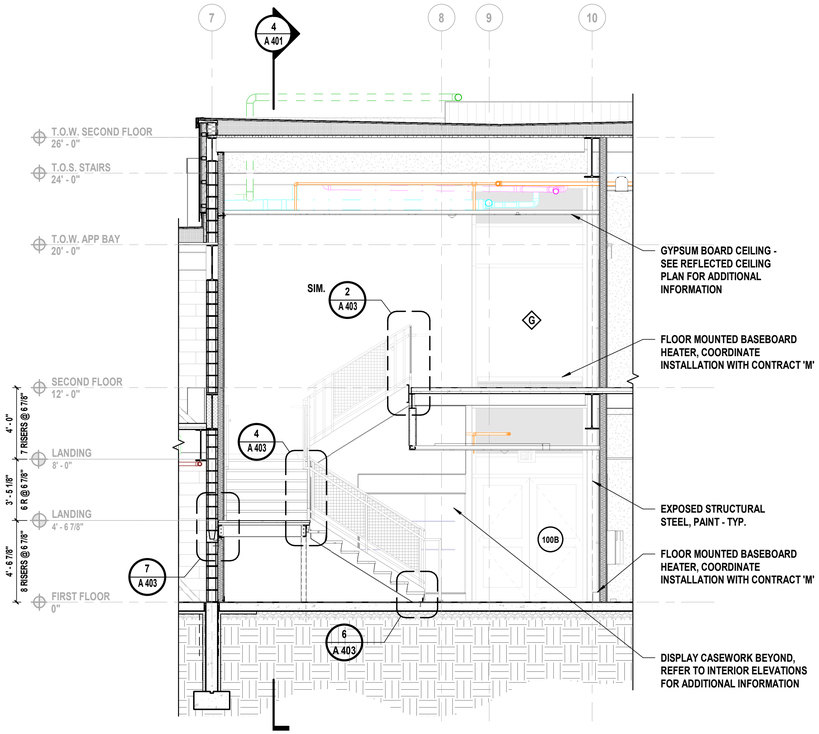

3 Stair 'B' Section

SCALE: 1/4" = 1'-0"

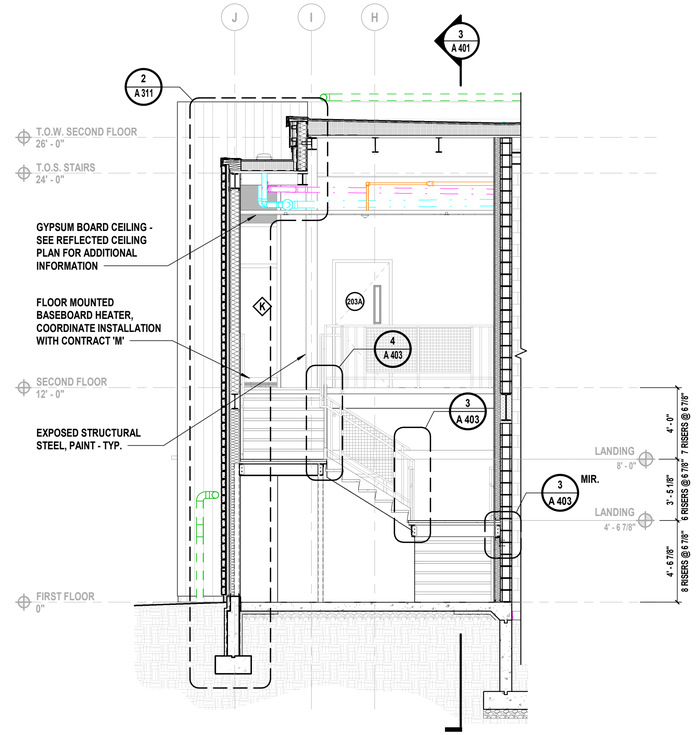

4 Stair 'B' Section

SCALE: 1/4" = 1'-0"

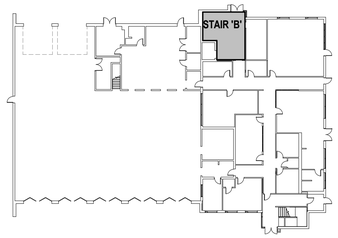

First Floor Key Plan

SCALE: NTS

H2M architects + engineers

538 Broad Hollow Road, 4th Floor East
Melville, NY 11747
631.756.8000 • www.h2m.com
NY Architecture & Landscape Architecture: No Certificate Required
NY Engineering Certificate of Authorization No.: 0018178

CONSULTANTS:

MARK	DATE	DESCRIPTION

REGISTERED ARCHITECT PATRICK O. STONE 039654 STATE OF NEW YORK

10/31/2025
Exp. Date

PATRICK O. STONE, R.A.
NY PROFESSIONAL ARCHITECT Lic. No. 039654

"IN ACCORDANCE WITH ARTICLE 145, SECTION 7209 OF THE NYS EDUCATION LAW, ALTERATION OF THIS DOCUMENT EXCEPT BY A LICENSED PROFESSIONAL IS ILLEGAL"

DESIGNED BY:	DRAWN BY:	CHECKED BY:	REVIEWED BY:
DBS/RLG	ANK	DBS	POS
PROJECT No: TRFD 2302	DATE: FEBRUARY 2025	SCALE: AS SHOWN	

CLIENT

THIELLS ROSEVILLE FIRE DISTRICT

NEW 26-100 FIRE HEADQUARTERS

65 W RAMAPO ROAD
GARNERVILLE, NY 10923

CONTRACT

CONTRACT G
GENERAL CONSTRUCTION

STATUS

FINAL BID DOCUMENT

SHEET TITLE

ENLARGED STAIR 'B' PLANS AND SECTIONS

DRAWING No.

A 401.00

C:\Users\akaled\Documents\TRFD2302_Central23-A_AKaled.rvt

2/25/2025 4:07:54 PM

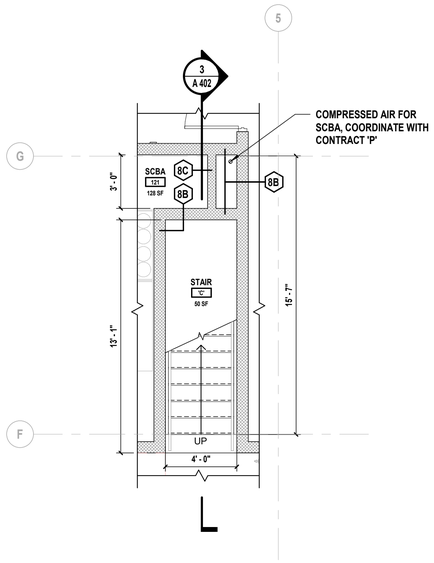

1 **Enlarged First Floor Plan - Stair 'C'**
SCALE: 1/4" = 1'-0"

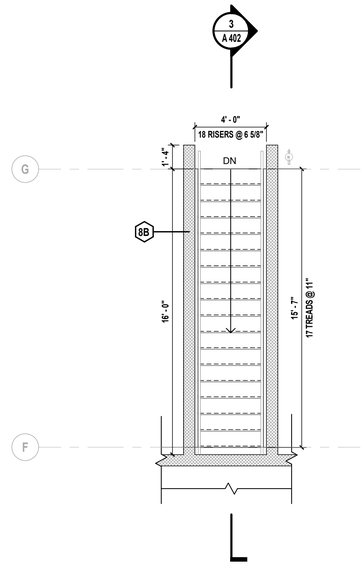

2 **Enlarged Mezzanine Plan - Stair 'C'**
SCALE: 1/4" = 1'-0"

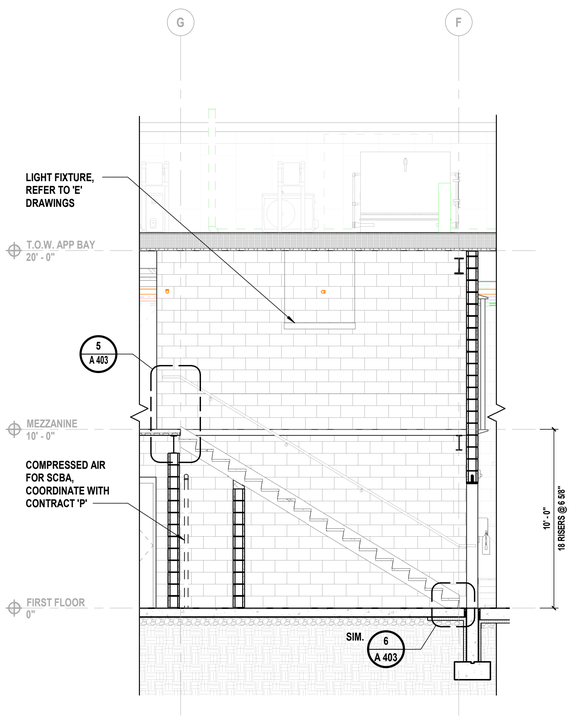

3 **Stair 'C' Section**
SCALE: 1/4" = 1'-0"

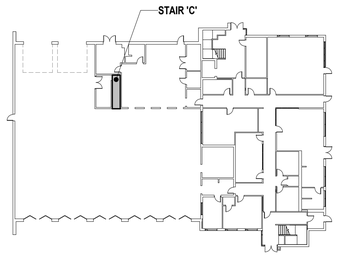

First Floor Key Plan
SCALE: NTS

C:\Users\akiled\Documents\TRFD2302_Central23-A_AKiled.rvt

2/25/2025 4:08:00 PM

H 2 M architects + engineers

538 Broad Hollow Road, 4th Floor East
Melville, NY 11747
631.756.8000 • www.h2m.com
NY Architecture & Landscape Architecture: No Certificate Required
NY Engineering Certificate of Authorization No.: 0018178

CONSULTANTS:

MARK	DATE	DESCRIPTION

REGISTERED ARCHITECT PATRICK O. STONE STATE OF NEW YORK 039654

10/31/2025
Exp. Date

PATRICK O. STONE, R.A.
NY PROFESSIONAL ARCHITECT Lic. No. 039654

"IN ACCORDANCE WITH ARTICLE 145, SECTION 7209 OF THE NYS EDUCATION LAW, ALTERATION OF THIS DOCUMENT EXCEPT BY A LICENSED PROFESSIONAL IS ILLEGAL."

DESIGNED BY:	DRAWN BY:	CHECKED BY:	REVIEWED BY:
DBS/RLG	ANK	DBS	POS

PROJECT No:	DATE:	SCALE:
TRFD 2302	FEBRUARY 2025	AS SHOWN

CLIENT

THIELLS ROSEVILLE FIRE DISTRICT

NEW 26-100 FIRE HEADQUARTERS

THIELLS 26 FD

65 W RAMAPO ROAD
GARNERVILLE, NY 10923

CONTRACT

CONTRACT G
GENERAL CONSTRUCTION

STATUS

FINAL BID DOCUMENT

SHEET TITLE

ENLARGED STAIR 'C' PLANS AND SECTIONS

DRAWING No.

A 402.00

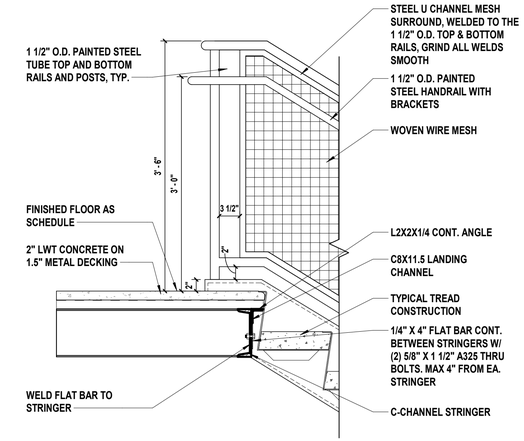

1 Stair and Handrail Detail at Landing
SCALE: 1" = 1'-0"

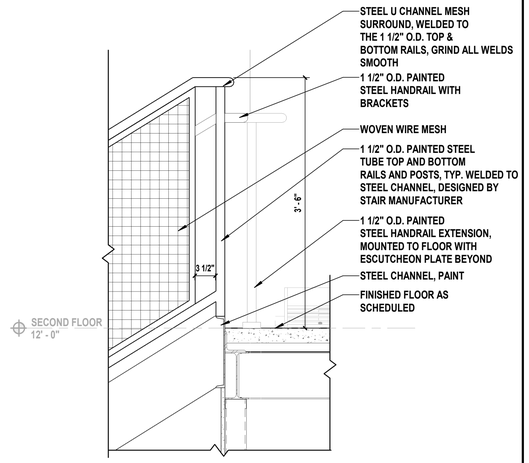

2 Stair 'A' Top Landing Detail
SCALE: 1" = 1'-0"

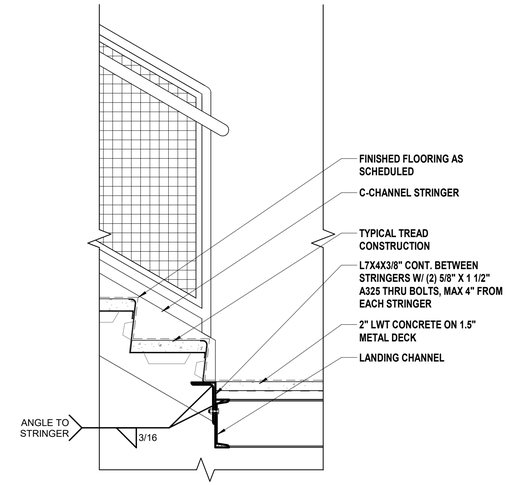

3 Intermediate Landing Connection (Typ.)
SCALE: 1" = 1'-0"

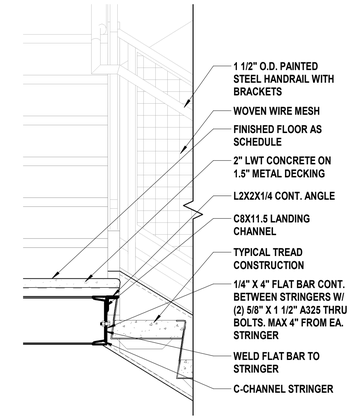

4 Intermediate Landing Connection (Typ.)
SCALE: 1" = 1'-0"

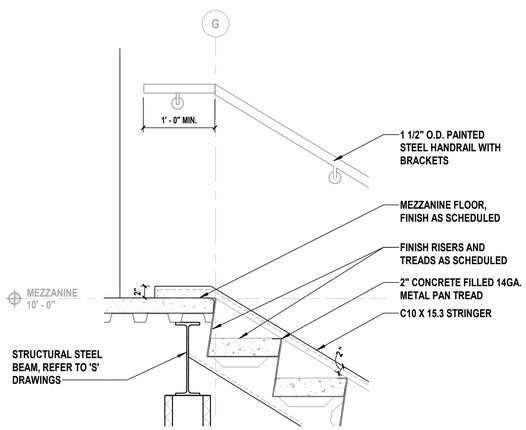

5 Stair 'C' Top Landing Detail
SCALE: 1" = 1'-0"

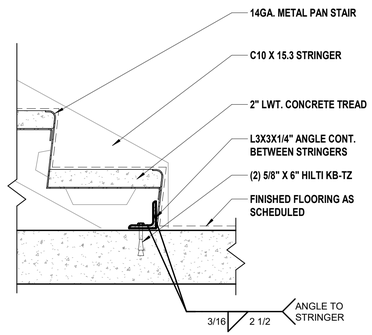

6 Concrete Slab Connection (Typ.)
SCALE: 1 1/2" = 1'-0"

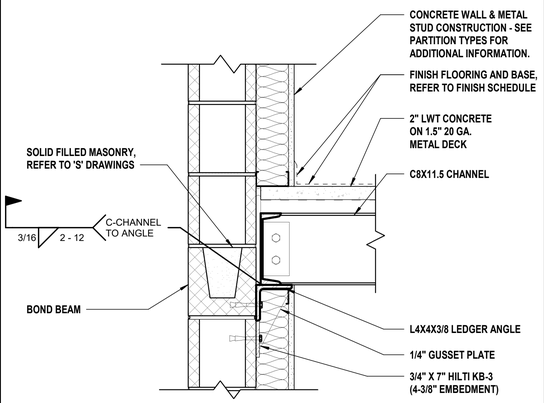

7 Stair Landing Connection Detail @ CMU Wall
SCALE: 1 1/2" = 1'-0"

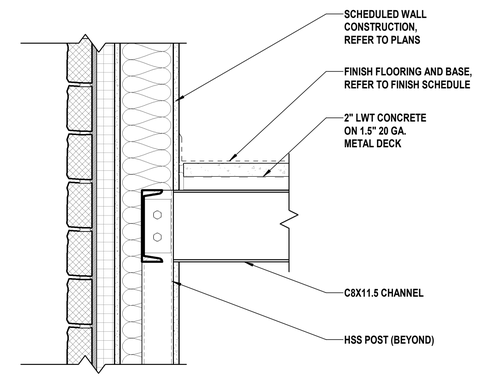

8 Stair Landing Connection Detail @ Metal Stud Wall
SCALE: 1 1/2" = 1'-0"

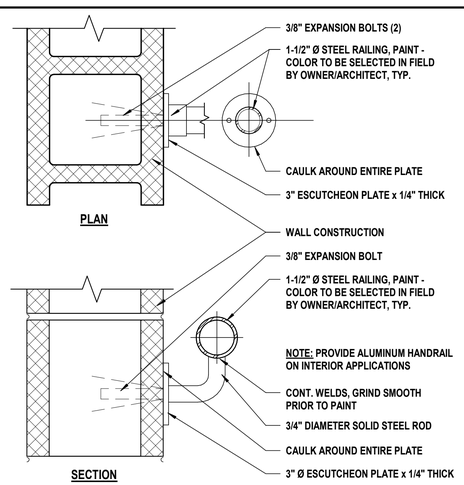

9 Wall Anchoring Details @ CMU Wall
SCALE: 3" = 1'-0"

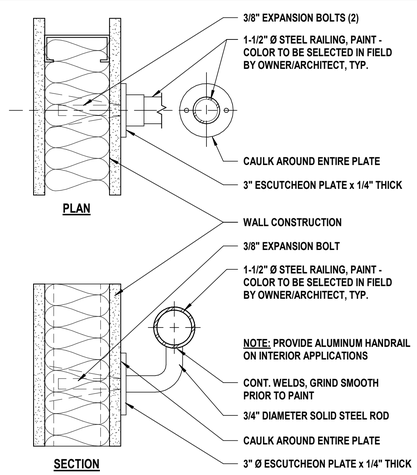

10 Wall Anchoring Details @ Metal Stud Wall
SCALE: 3" = 1'-0"

H2M architects + engineers
538 Broad Hollow Road, 4th Floor East
Melville, NY 11747
631.756.8000 • www.h2m.com
NY Architecture & Landscape Architecture: No Certificate Required
NY Engineering Certificate of Authorization No.: 0018178

CONSULTANTS:

MARK	DATE	DESCRIPTION

REGISTERED ARCHITECT PATRICK O. STONE 039654 STATE OF NEW YORK

10/31/2025
Exp. Date

PATRICK O. STONE, R.A.
NY PROFESSIONAL ARCHITECT LIC. No. 039654

"IN ACCORDANCE WITH ARTICLE 145, SECTION 7209 OF THE NYS EDUCATION LAW, ALTERATION OF THIS DOCUMENT EXCEPT BY A LICENSED PROFESSIONAL IS ILLEGAL."

DESIGNED BY:	DRAWN BY:	CHECKED BY:	REVIEWED BY:
DBS/RLG	ANK	DBS	POS

PROJECT No:	DATE:	SCALE:
TRFD 2302	FEBRUARY 2025	AS SHOWN

CLIENT

THIELLS ROSEVILLE FIRE DISTRICT

NEW 26-100 FIRE HEADQUARTERS

THIELLS 26 FD

65 W RAMAPO ROAD
GARNERVILLE, NY 10923

CONTRACT

CONTRACT G
GENERAL CONSTRUCTION

STATUS

FINAL BID DOCUMENT

SHEET TITLE

STAIR AND RAILING DETAILS

DRAWING No.

A 403.00

C:\Users\akaled\Documents\TRFD2302_Central23-A_AKaled.rvt

2/25/2025 4:08:04 PM

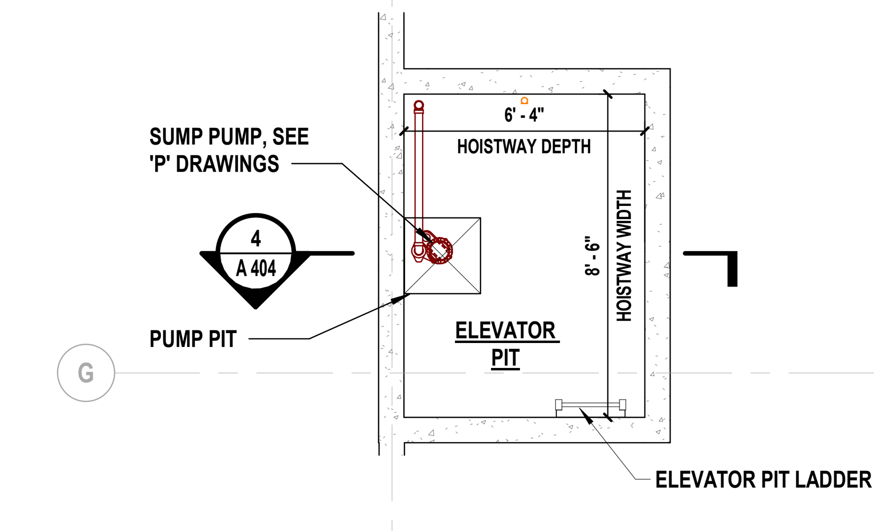

1 **Elevator Pit Plan**
SCALE: 1/4" = 1'-0"

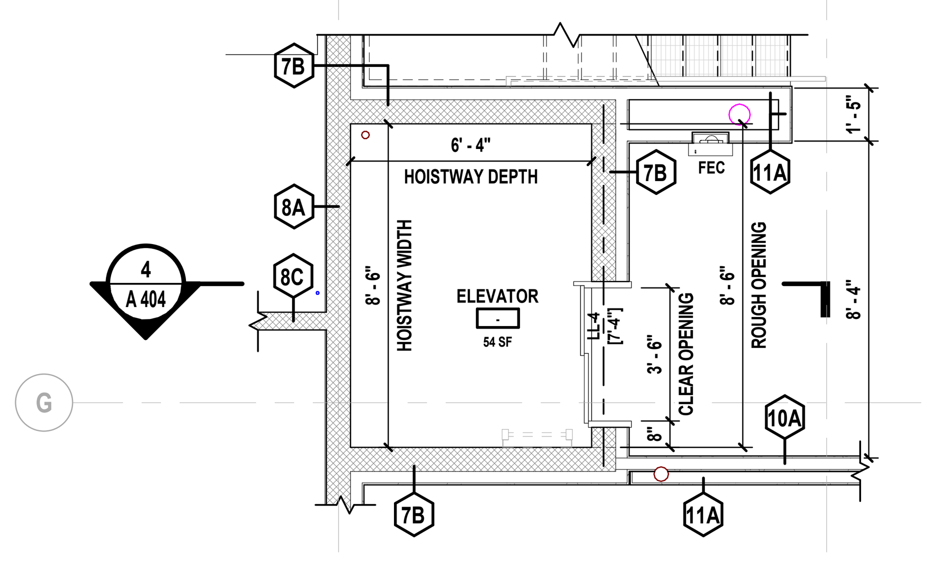

2 **First Floor Elevator Plan**
SCALE: 1/4" = 1'-0"

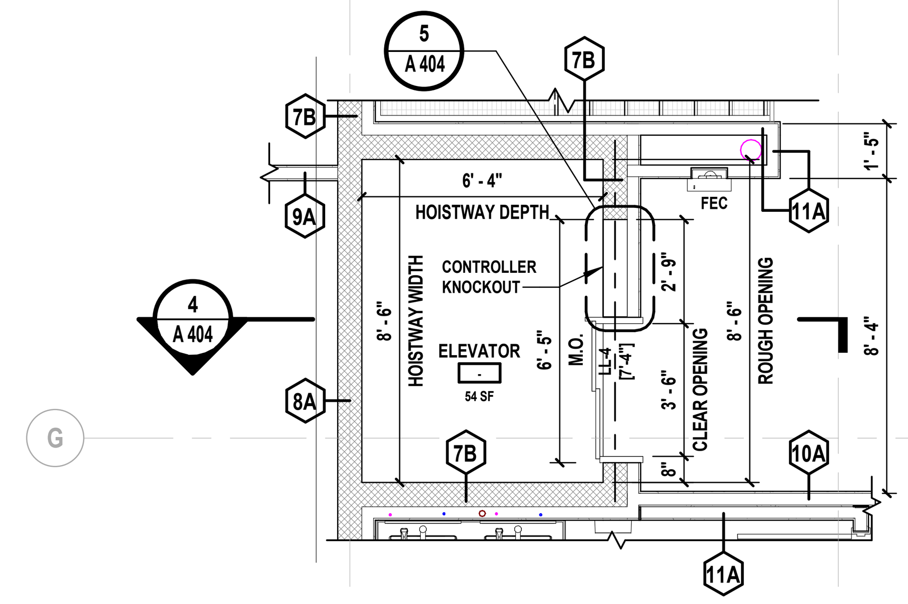

3 **Second Floor Elevator Plan**
SCALE: 1/4" = 1'-0"

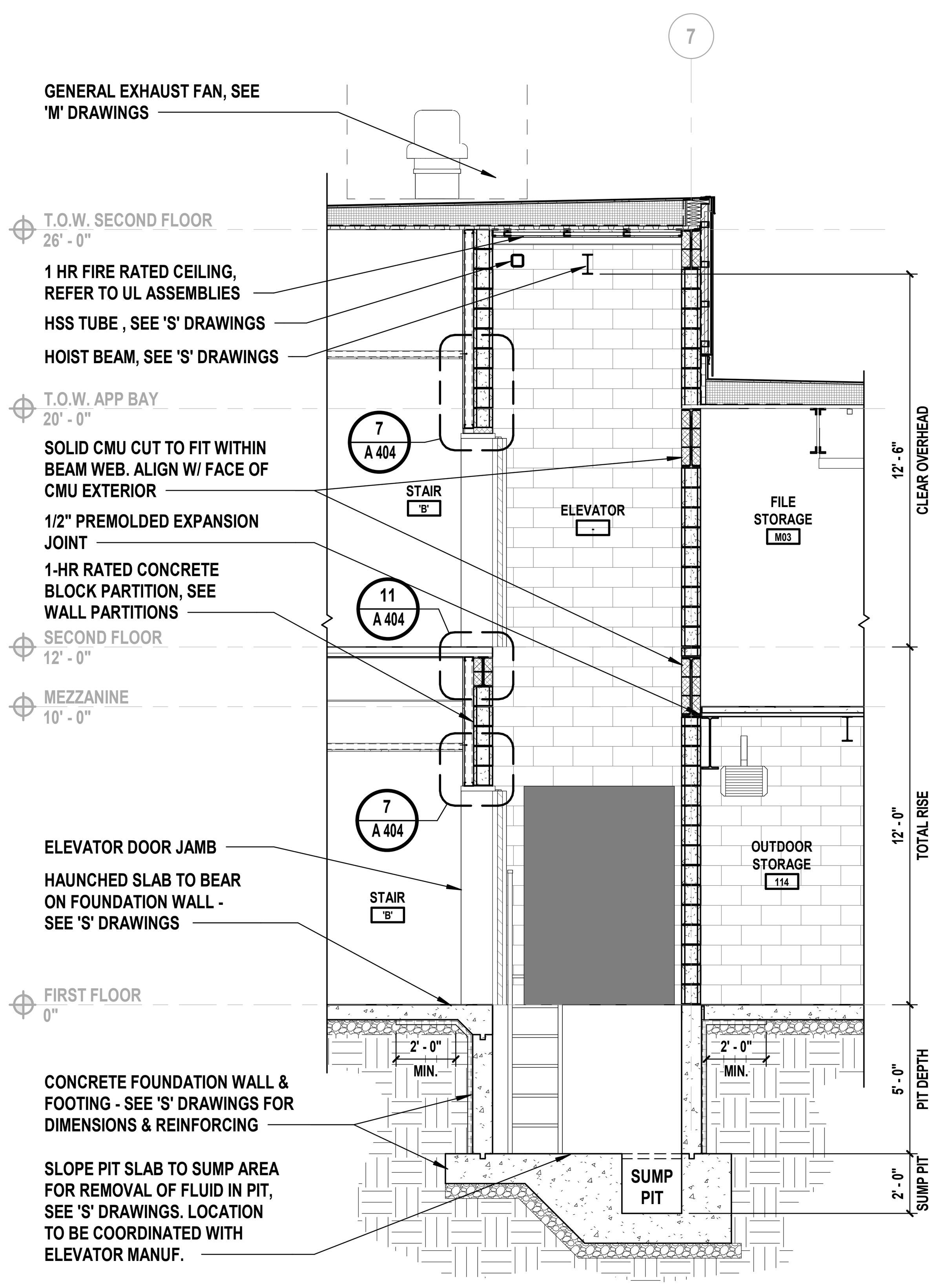

4 **Elevator Section**
SCALE: 1/4" = 1'-0"

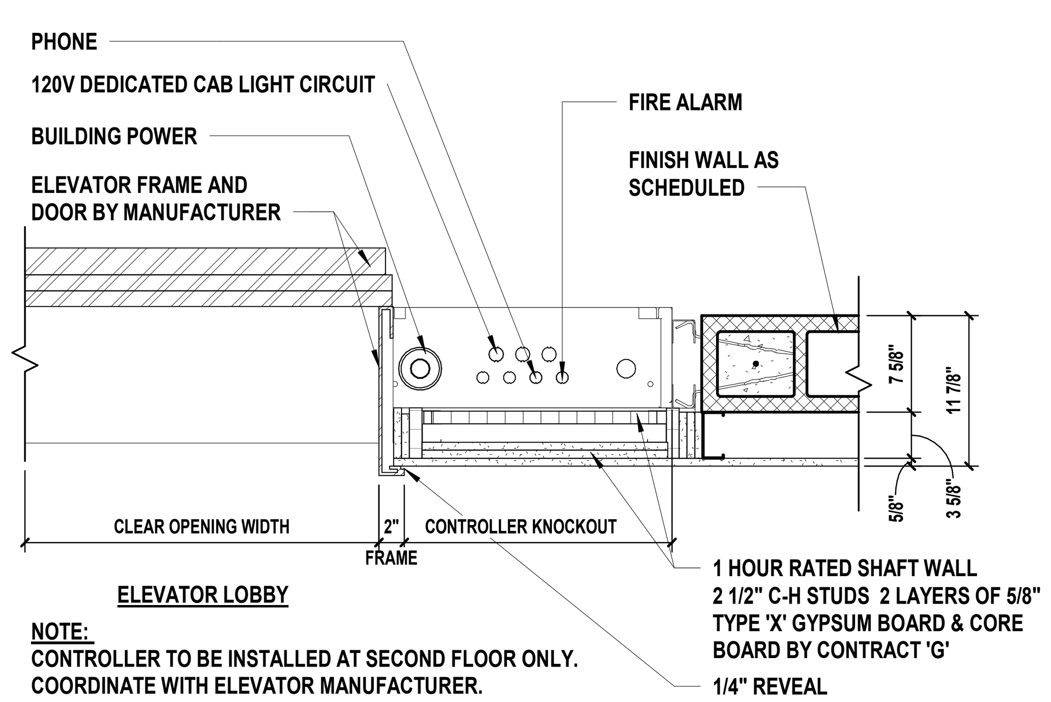

5 **Entrance Plan View - Sim.**
SCALE: 1" = 1'-0"

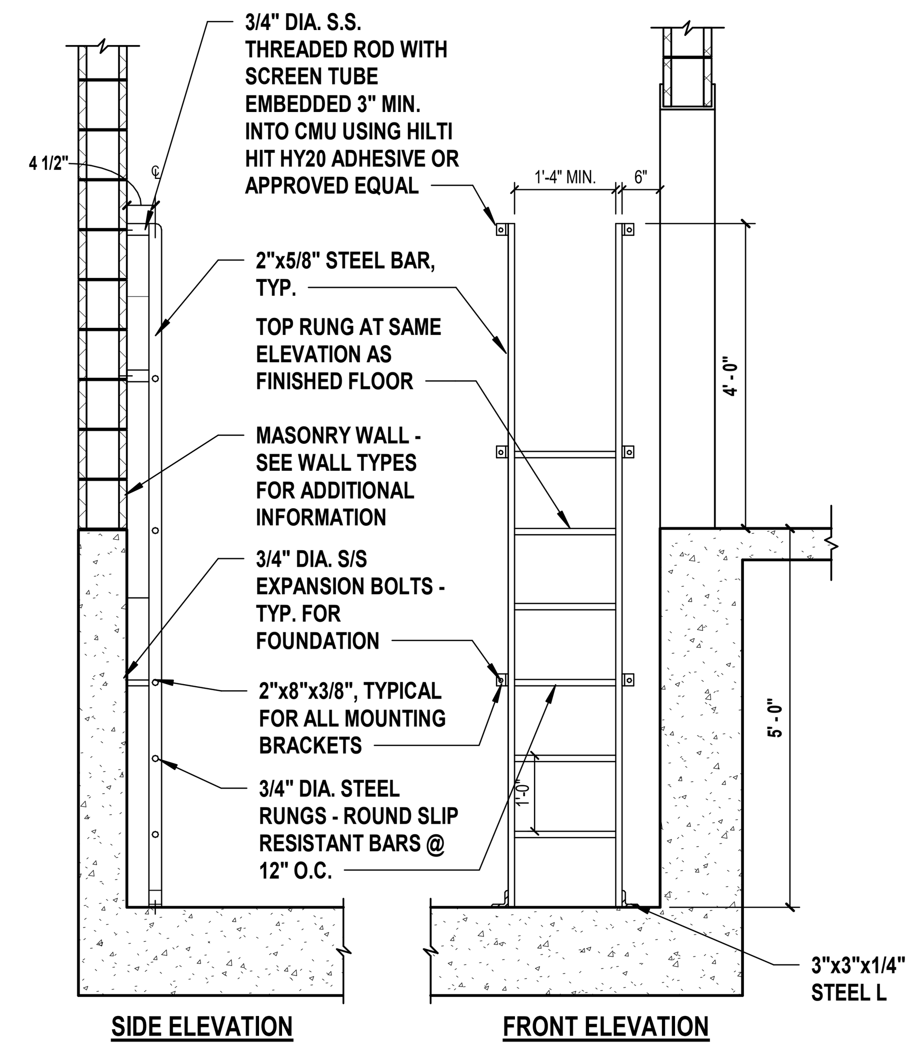

6 **Elevator Pit Ladder Detail**
SCALE: 1/2" = 1'-0"

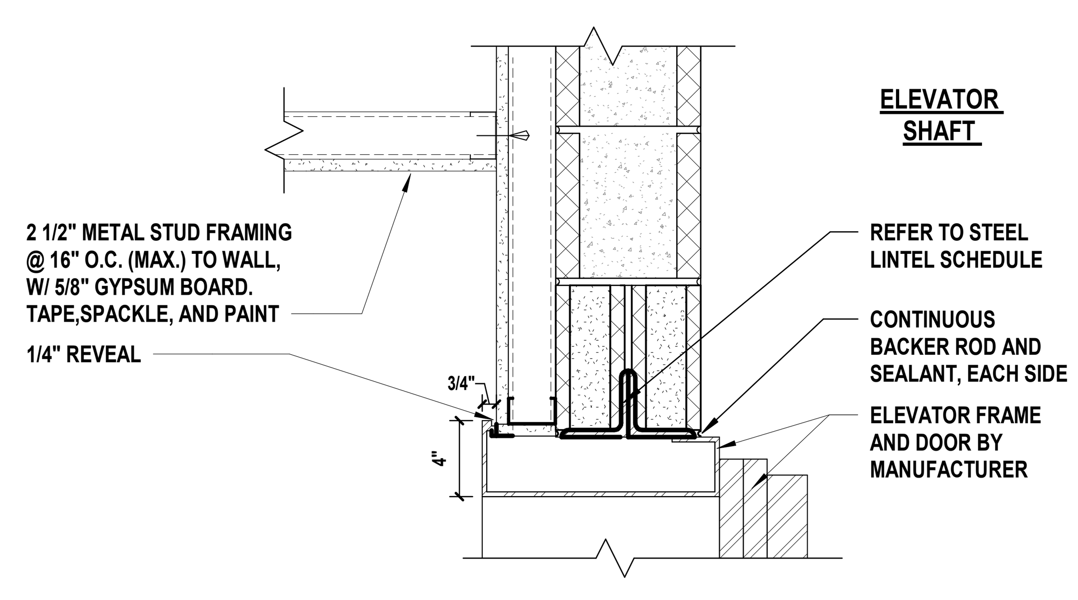

7 **Elevator Door Head Detail**
SCALE: 1 1/2" = 1'-0"

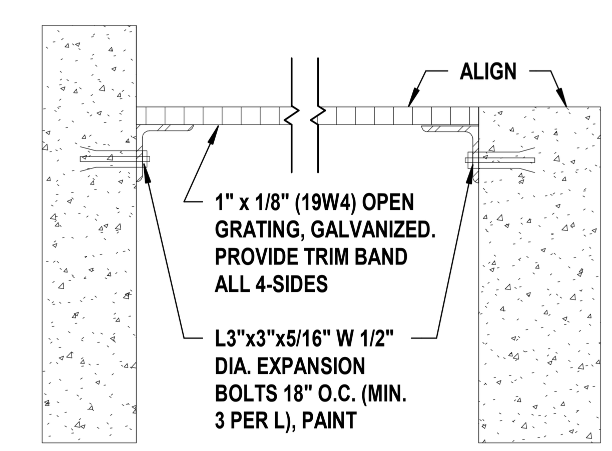

8 **Sump Pit Cover Detail**
SCALE: 1 1/2" = 1'-0"

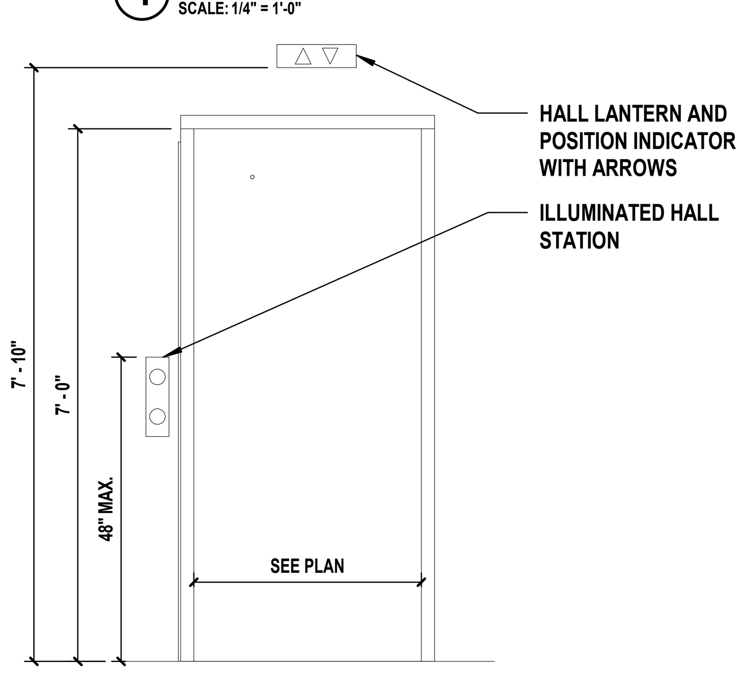

9 **Entrance Elevation View**
SCALE: 1/2" = 1'-0"

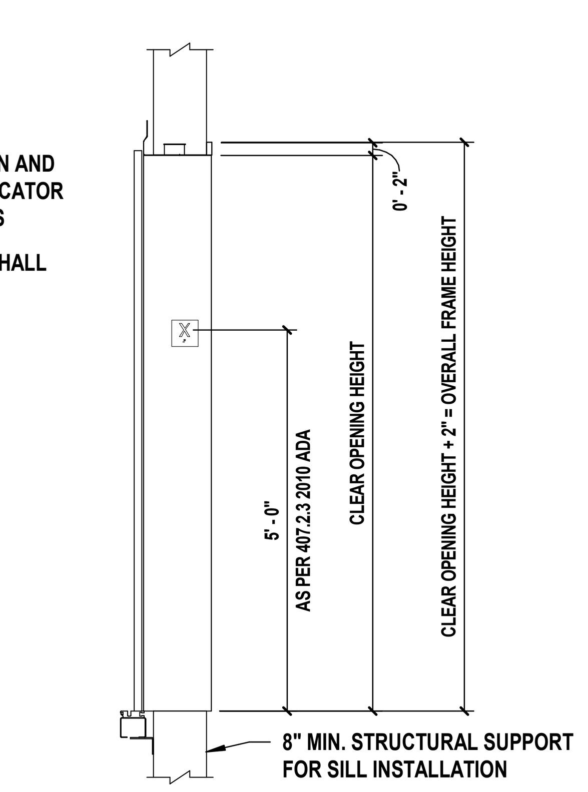

10 **Entrance Side View**
SCALE: 1/2" = 1'-0"

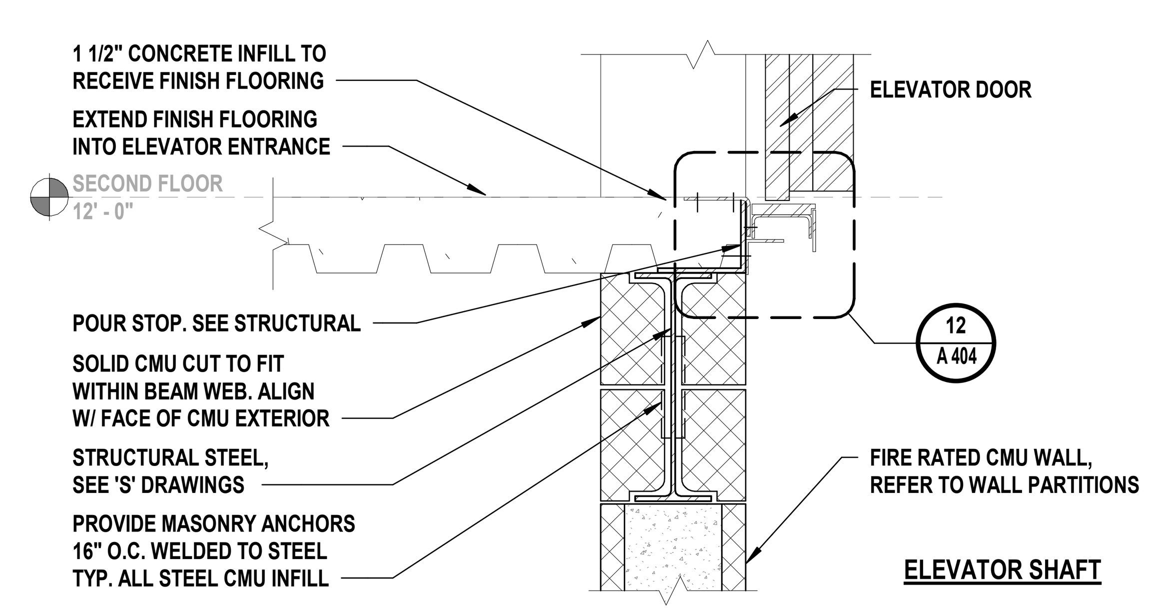

11 **Elevator Door Threshold @ Concrete Floor**
SCALE: 1 1/2" = 1'-0"

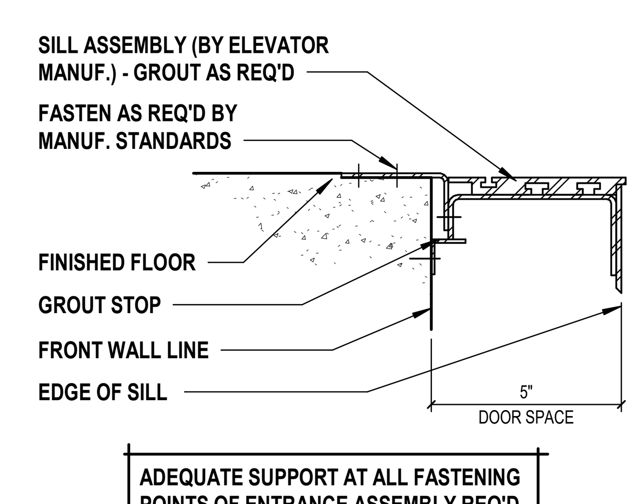

12 **Elevator Sill Detail**
SCALE: 3" = 1'-0"

GENERAL ELEVATOR REQUIREMENT NOTES

1. PROVIDE PLUMB, PROPERLY FRAMED AND ENCLOSED LEGAL HOISTWAY INCLUDING VENTING (AS REQUIRED BY THE GOVERNING CODES) AND SAFETY BEAM, AS SHOWN.
2. PROVIDE ADEQUATE SUPPORT FOR JACK, GUIDE RAIL BRACKETS (NOT TO EXCEED THE VERTICAL SPACING INDICATED), AND BUFFERS. SEPARATOR BEAMS TO BE PROVIDED WHERE REQUIRED BY MANUFACTURER.
3. ADEQUATE PROVISIONS FOR GUARDING AND PROTECTING THE HOISTWAY DURING CONSTRUCTION ARE TO BE ERECTED, MAINTAINED, AND REMOVED BY CONTRACTOR.
4. PROVIDE ALL CUTTING OR PATCHING AS REQUIRED TO ACCOMMODATE ELEVATOR INSTALLATION, INCLUDING CUTOUTS REQUIRED FOR OIL AND POWER LINE RUNS (COORDINATE CUTOUT LOCATIONS WITH ELEVATOR MANUFACTURER).
5. HOISTWAY WALLS ARE TO BE CONSTRUCTED IN ACCORDANCE WITH THE REQUIRED FIRE RATING (INCLUDING LOCATIONS WHERE PENETRATED BY ELEVATOR FIXTURE BOXES), AND TO INCLUDE ADEQUATE FASTENINGS TO HOISTWAY ASSEMBLIES. COORDINATE LOCATION AND INSTALLATION OF HORIZONTAL SUPPORTS ABOVE THE CLEAR OPENINGS AT EACH LANDING AS REQUIRED TO SUPPORT THE DOOR FRAME ASSEMBLY. THE ENTRANCE WALL(S) MUST NOT BE COMPLETELY CONSTRUCTED UNTIL THE FRAMES AND SILLS ARE SET.
6. COORDINATE WITH ELEVATOR MANUFACTURER ALL ROUGH DOOR OPENINGS AND POCKETS IN WALL CONSTRUCTION (AS REQUIRED TO INSTALL ENTRANCE FRAMES, HALL FIXTURES, ETC.).
7. ELEVATOR CAB FLOORING MUST NOT EXCEED A THICKNESS OF 5/16". MODIFY FLOORING AS REQUIRED TO ACCOMMODATE INSTALLATION.
8. PROVIDE A FIXED VERTICAL STEEL LADDER TO PIT EXTENDING 4'-0" ABOVE THE SILL OF THE BOTTOM ENTRANCE AS LOCATED IN THE PLAN VIEW. LADDER WIDTH AND PROJECTION FROM WALL PER LOCAL CODE, AND ELEVATOR MANUFACTURER'S REQUIREMENTS.
9. DRY PIT TO BE REINFORCED TO SUSTAIN VERTICAL FORCES AS DETERMINED BY ELEVATOR MANUFACTURER. THE ACCUMULATION OF WATER MUST BE PREVENTED.
10. PIT FLOOR BENEATH CYLINDERS AND BUFFER TO BE FLAT AND LEVEL WITHIN 1/8" FULL WIDTH HOISTWAY. SLOPE REMAINING PIT FLOOR TO SUMP AREA FOR REMOVAL OF FLUID IN PIT. FINAL LOCATION AND SIZE OF SUMP TO BE COORDINATED WITH MANUFACTURER TO AVOID ELEVATOR COMPONENTS AND ACCESS AREA.
11. PROVIDE A THREE PHASE POWER SYSTEM, 120V 15 AMP CIRCUIT, FIRE ALARM AND OUTSIDE DEDICATED TELEPHONE LINE ROUTED TO THE TOP OF THE CONTROLLER AT THE CONTROLLER LANDING LEVEL.
12. IN THE PIT, PROVIDE A SEPARATE BRANCH CIRCUIT FOR CONVENIENCE G.F.C.I. OUTLETS AND LIGHT FIXTURE WITH LIGHT SWITCH (ADJACENT TO THE PIT LADDER AS INDICATED).
13. ALL 125 VOLT, 15 OR 20 AMP, SINGLE PHASE DUPLEX RECEPTACLES INSTALLED IN PITS OR MACHINERY SPACES, SHALL BE OF THE GROUND-FAULT- CIRCUIT-INTERRUPTER TYPE. SEE 'E' DRAWINGS AND SPECIFICATIONS FOR ADDITIONAL INFORMATION.
14. PROVIDE ELECTRIC POWER FOR TOOLS, LIGHT, HOIST, ETC., DURING ERECTION AS WELL AS ELECTRIC CURRENT FOR STARTING AND ADJUSTING THE ELEVATOR. SEE 'E' DRAWINGS AND SPECIFICATIONS FOR ADDITIONAL INFORMATION.
15. PROVIDE ONE (1) DEDICATED OUTSIDE TELEPHONE LINE ROUTED TO THE TOP OF THE CONTROLLER AT THE CONTROLLER LANDING LEVEL. SEE 'E' DRAWINGS AND SPECIFICATIONS FOR ADDITIONAL INFORMATION.
16. PROVIDE ALL NECESSARY CONDUIT AND WIRING FROM HOISTWAY TO ELEVATOR MONITORING DEVICES (FOR SECURITY, LIFE SAFETY, AND/OR FIRE REQUIREMENTS), AS APPLICABLE. SEE 'E' DRAWINGS AND SPECIFICATIONS FOR ADDITIONAL INFORMATION.
17. PROVIDE SMOKE DETECTORS, AS REQUIRED BY NYS BUILDING CODE APPENDIX K, SECTION 2.27.3.2.1. SEE 'FA' DRAWINGS.
18. ELEVATOR MANUFACTURE, CONSTRUCTION, FUNCTIONALITY AND IDENTIFICATION SHALL BE AS PER ASME A17.1-2016.

PIT/OVERHEAD REQUIREMENTS

SPEED	PIT DEPTH	MAXIMUM TOTAL RISE
150 F.P.M	5' - 0"	12'-0"

FLOOR HEIGHT

FLOOR	FIRST	0' - 0"
	SECOND	12' - 0"
	TOTAL RISE	12' - 0"

NOTES:

1. HOISTWAY SIZE MUST BE PLUMB WITHIN 1" AND MUST NOT BE LESS THAN FIGURES SHOWN.
2. SUMP OR DRAIN LOCATION IN PIT TO BE COORDINATED WITH MANUFACTURER TO AVOID ELEVATOR COMPONENTS AND ACCESS AREA.
3. HOISTWAY FASCIA IS NOT SELF-SUPPORTING FOR LONG, CONTINUOUS RUNS VOID OF ENTRANCES. ADEQUATE SUPPORT FOR THE FASCIA MUST BE PROVIDED.

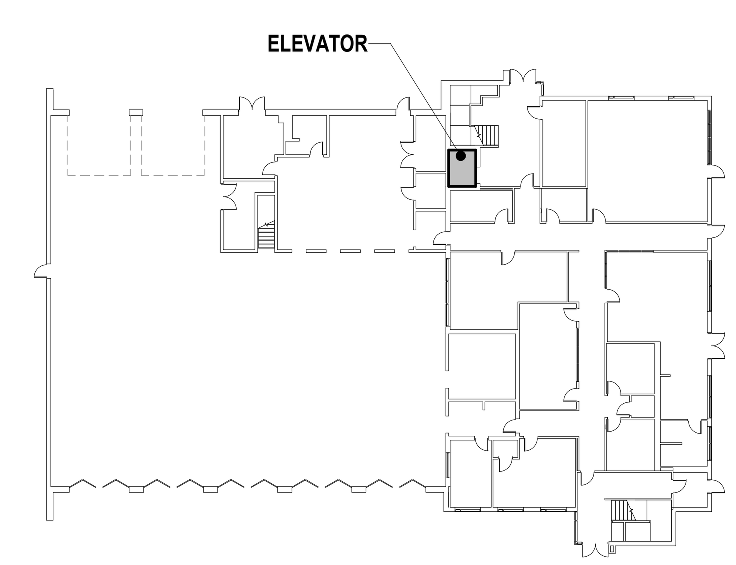

First Floor Key Plan
SCALE: NTS

H2M architects + engineers
538 Broad Hollow Road, 4th Floor East
Melville, NY 11747
631.756.8000 ▪ www.h2m.com
NY Architecture & Landscape Architecture: No Certificate Required
NY Engineering Certificate of Authorization No.: 0018178

CONSULTANTS:

MARK	DATE	DESCRIPTION

REGISTERED ARCHITECT · PATRICK OTTO STONE · 039654 · STATE OF NEW YORK

PATRICK O. STONE, R.A. 10/31/2025 Exp. Date
NY PROFESSIONAL ARCHITECT Lic. No. 039654

"IN ACCORDANCE WITH ARTICLE 145, SECTION 7209 OF THE NYS EDUCATION LAW, ALTERATION OF THIS DOCUMENT EXCEPT BY A LICENSED PROFESSIONAL IS ILLEGAL"

DESIGNED BY:	DRAWN BY:	CHECKED BY:	REVIEWED BY:
DBS/RLG	ANK	DBS	POS

PROJECT No:	DATE:	SCALE:
TRFD 2302	FEBRUARY 2025	AS SHOWN

CLIENT
THIELLS ROSEVILLE FIRE DISTRICT

NEW 26-100 FIRE HEADQUARTERS

65 W RAMAPO ROAD
GARNERVILLE, NY 10923

CONTRACT
CONTRACT G
GENERAL CONSTRUCTION

STATUS
FINAL BID DOCUMENT

SHEET TITLE
ENLARGED ELEVATOR PLAN, SECTION, DETAILS & NOTES

DRAWING No.
A 404.00

C:\Users\akaled\Documents\TRFD2302_Central23-A_AKaled.rvt
2/25/2025 4:08:07 PM

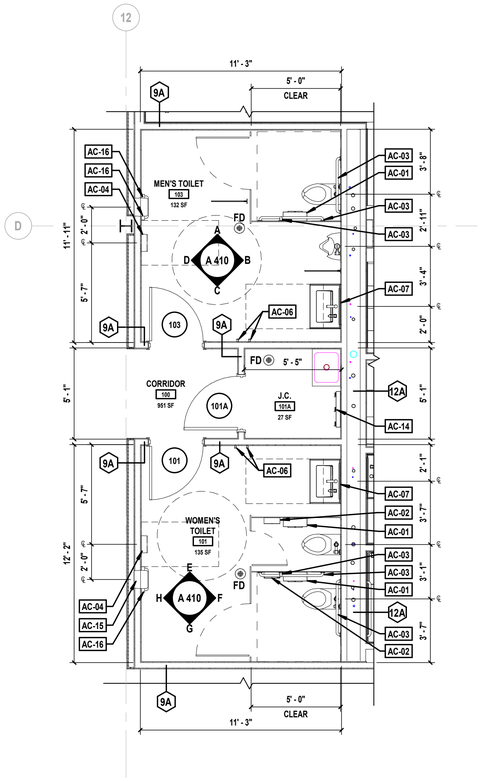

1 Enlarged First Floor Toilet Room Plans

SCALE: 1/4" = 1'-0"

NOTE: REFER TO SHEET A 412 FOR TYPICAL TILE LAYOUTS, NOTES, DETAILS AND ACCESSORY SCHEDULE.

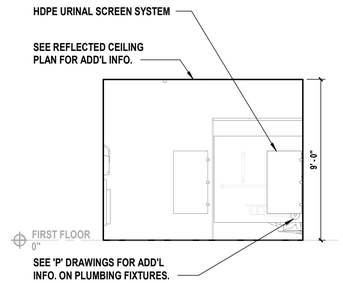

A Interior Elevation

SCALE: 1/4" = 1'-0"

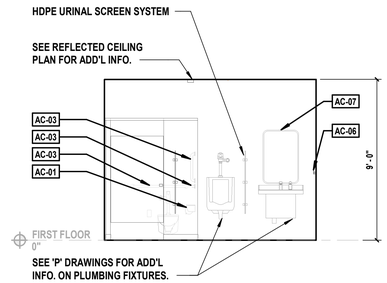

B Interior Elevation

SCALE: 1/4" = 1'-0"

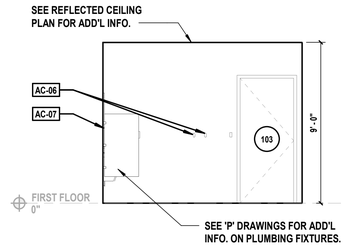

C Interior Elevation

SCALE: 1/4" = 1'-0"

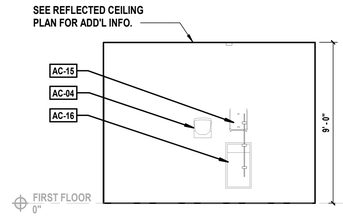

D Interior Elevation

SCALE: 1/4" = 1'-0"

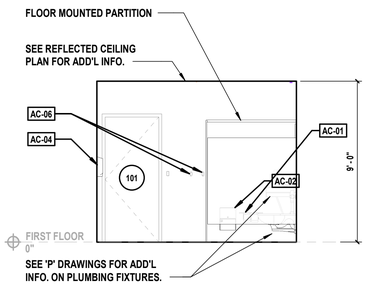

E Interior Elevation

SCALE: 1/4" = 1'-0"

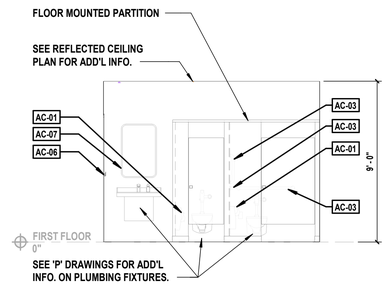

F Interior Elevation

SCALE: 1/4" = 1'-0"

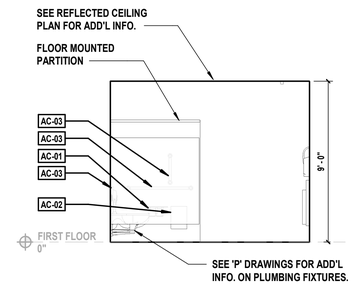

G Interior Elevation

SCALE: 1/4" = 1'-0"

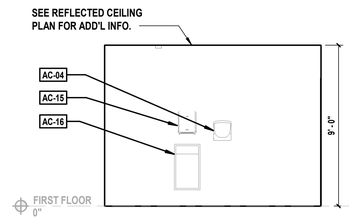

H Interior Elevation

SCALE: 1/4" = 1'-0"

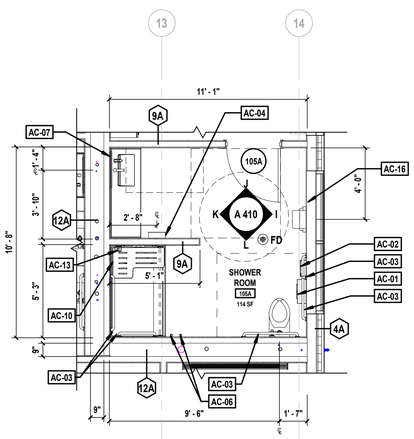

2 Enlarged Shower Room Plan

SCALE: 1/4" = 1'-0"

NOTE: REFER TO SHEET A 412 FOR TYPICAL TILE LAYOUTS, NOTES, DETAILS AND ACCESSORY SCHEDULE.

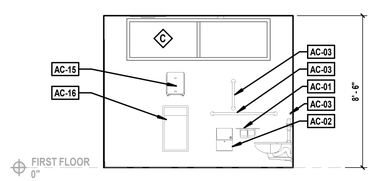

I Interior Elevation

SCALE: 1/4" = 1'-0"

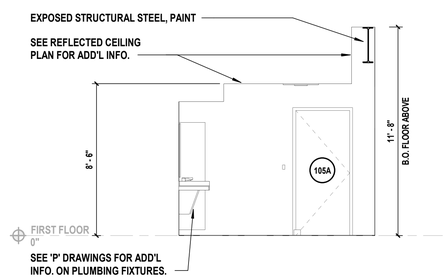

J Interior Elevation

SCALE: 1/4" = 1'-0"

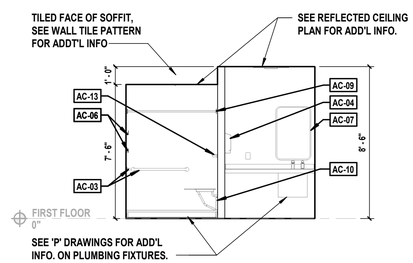

K Interior Elevation

SCALE: 1/4" = 1'-0"

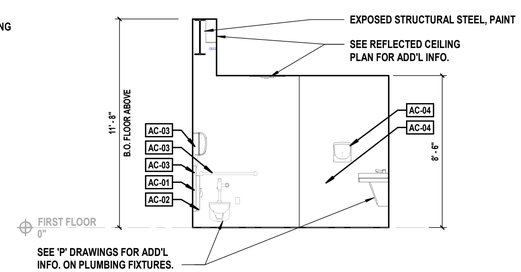

L Interior Elevation

SCALE: 1/4" = 1'-0"

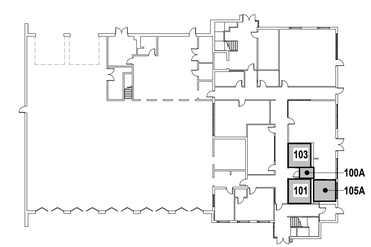

First Floor Key Plan

SCALE: NTS

H2M architects + engineers

538 Broad Hollow Road, 4th Floor East
Melville, NY 11747
631.756.8000 • www.h2m.com
NY Architecture & Landscape Architecture: No Certificate Required
NY Engineering Certificate of Authorization No.: 0018178

CONSULTANTS:

MARK	DATE	DESCRIPTION

REGISTERED ARCHITECT PATRICK O. STONE 039654 STATE OF NEW YORK

10/31/2025
Exp. Date

PATRICK O. STONE, R.A.
NY PROFESSIONAL ARCHITECT Lic. No. 039654

"IN ACCORDANCE WITH ARTICLE 145, SECTION 7209 OF THE NYS EDUCATION LAW, ALTERATION OF THIS DOCUMENT EXCEPT BY A LICENSED PROFESSIONAL IS ILLEGAL"

DESIGNED BY:	DRAWN BY:	CHECKED BY:	REVIEWED BY:
DBS/RLG	ANK	DBS	POS

PROJECT No:	DATE:	SCALE:
TRFD 2302	FEBRUARY 2025	AS SHOWN

CLIENT

THIELLS ROSEVILLE FIRE DISTRICT

NEW 26-100 FIRE HEADQUARTERS

THIELLS 26 FD

65 W RAMAPO ROAD
GARNERVILLE, NY 10923

CONTRACT

CONTRACT G
GENERAL CONSTRUCTION

STATUS

FINAL BID DOCUMENT

SHEET TITLE

ENLARGED TOILET ROOMS, INTERIOR ELEVATIONS & TYPICAL DETAILS

DRAWING No.

A 410.00

C:\Users\akiled\Documents\TRFD2302_Central23-A_AKiled.rvt

2/25/2025 4:08:16 PM

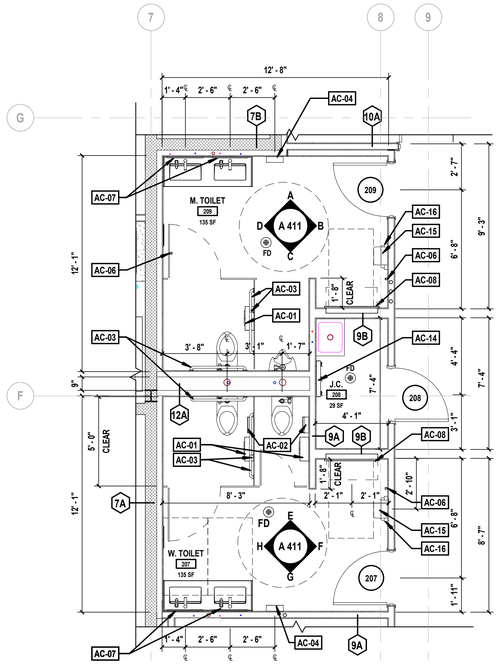

1 Enlarged Second Floor Toilet Room Plans

SCALE: 1/4" = 1'-0"

NOTE: REFER TO SHEET A 412 FOR TYPICAL TILE LAYOUTS, NOTES, DETAILS AND ACCESSORY SCHEDULE.

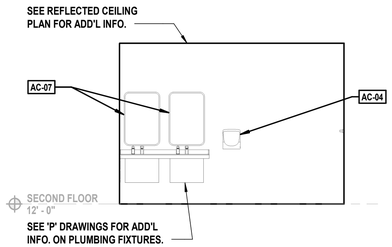

A Interior Elevation

SCALE: 1/4" = 1'-0"

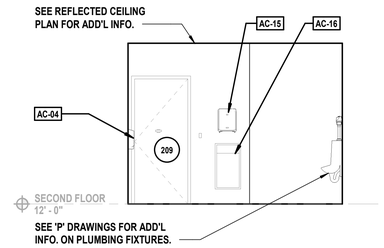

B Interior Elevation

SCALE: 1/4" = 1'-0"

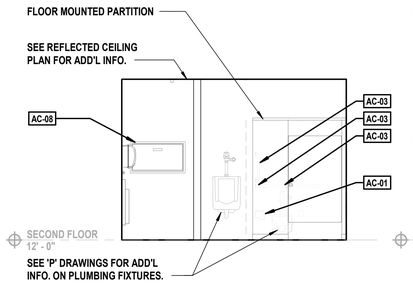

C Interior Elevation

SCALE: 1/4" = 1'-0"

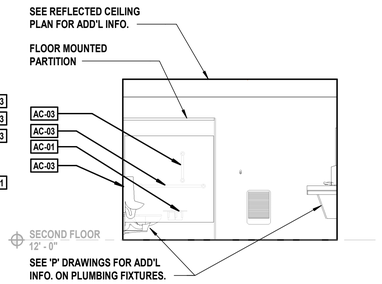

D Interior Elevation

SCALE: 1/4" = 1'-0"

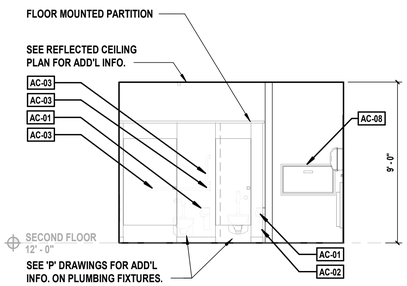

E Interior Elevation

SCALE: 1/4" = 1'-0"

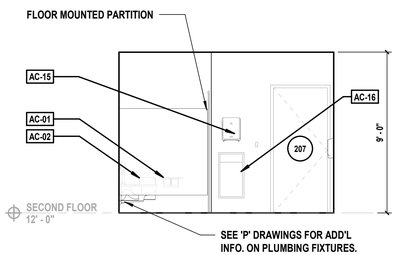

F Interior Elevation

SCALE: 1/4" = 1'-0"

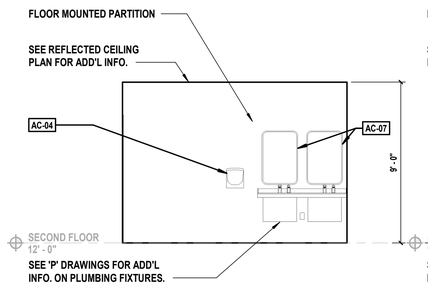

G Interior Elevation

SCALE: 1/4" = 1'-0"

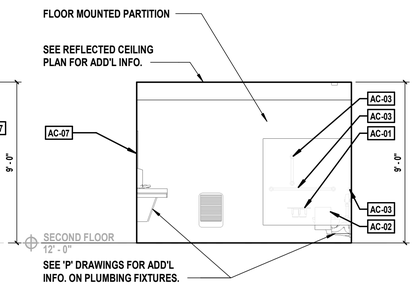

H Interior Elevation

SCALE: 1/4" = 1'-0"

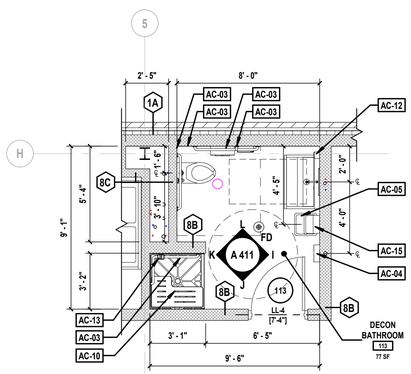

2 Enlarged Decon Bathroom Plan

SCALE: 1/4" = 1'-0"

NOTE: REFER TO SHEET A 412 FOR TYPICAL TILE LAYOUTS, NOTES, DETAILS AND ACCESSORY SCHEDULE.

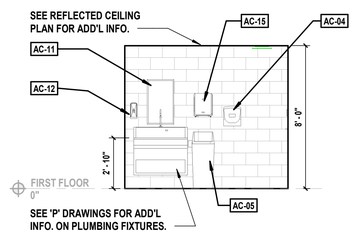

I Interior Elevation

SCALE: 1/4" = 1'-0"

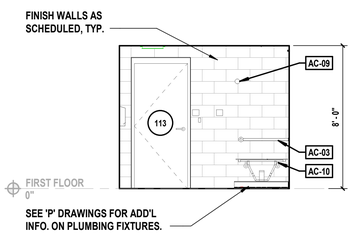

J Interior Elevation

SCALE: 1/4" = 1'-0"

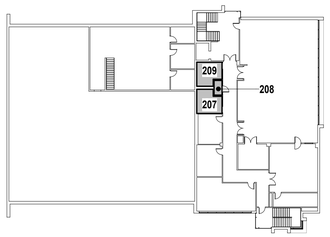

Second Floor Key Plan

SCALE: NTS

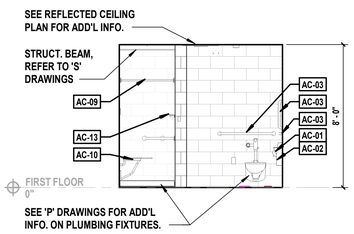

K Interior Elevation

SCALE: 1/4" = 1'-0"

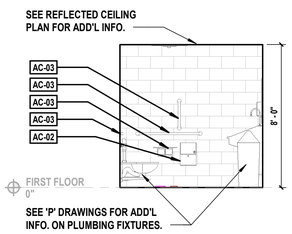

L Interior Elevation

SCALE: 1/4" = 1'-0"

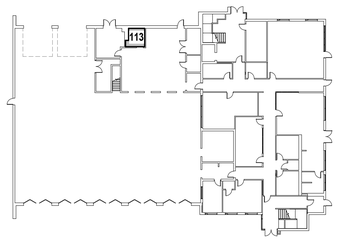

First Floor Key Plan

SCALE: NTS

H2M architects + engineers

538 Broad Hollow Road, 4th Floor East
Melville, NY 11747
631.756.8000 • www.h2m.com
NY Architecture & Landscape Architecture: No Certificate Required
NY Engineering Certificate of Authorization No.: 0018178

CONSULTANTS:

MARK	DATE	DESCRIPTION

REGISTERED ARCHITECT PATRICK O. STONE 039654 STATE OF NEW YORK

PATRICK O. STONE, R.A.
NY PROFESSIONAL ARCHITECT LIC. No. 039654
Exp. Date 10/31/2025

"IN ACCORDANCE WITH ARTICLE 145, SECTION 7209 OF THE NYS EDUCATION LAW, ALTERATION OF THIS DOCUMENT EXCEPT BY A LICENSED PROFESSIONAL IS ILLEGAL"

DESIGNED BY:	DRAWN BY:	CHECKED BY:	REVIEWED BY:
DBS/RLG	ANK	DBS	POS
PROJECT No: TRFD 2302	DATE: FEBRUARY 2025	SCALE: AS SHOWN	

CLIENT

THIELLS ROSEVILLE FIRE DISTRICT

NEW 26-100 FIRE HEADQUARTERS

65 W RAMAPO ROAD
GARNERVILLE, NY 10923

CONTRACT

CONTRACT G
GENERAL CONSTRUCTION

STATUS

FINAL BID DOCUMENT

SHEET TITLE

ENLARGED TOILET ROOMS, INTERIOR ELEVATIONS & TYPICAL DETAILS

DRAWING No.

A 411.00

C:\Users\akaled\Documents\TRFD2302_Central23-A_AKaled.rvt

2/25/2025 4:08:26 PM

TOILET ACCESSORY SCHEDULE

MARK	Manufacturer	Model	DESCRIPTION	Comments
AC-01	BRADLEY	5263	TOILET TISSUE DISPENSER WITH SHELF, DOUBLE ROLL	
AC-02	BRADLEY	4722-15	SURFACE MOUNTED SANITARY NAPKIN DISPOSAL	
AC-03	<varies>	<varies>	<varies>	<varies>
AC-04	BRADLEY	2923-287401	SURFACE MOUNTED ADA COMPLIANT HAND DRYER	
AC-05	BRADLEY	377-36	21-GAL WASTE RECEPTACLE WITH SWING TOP	
AC-06	BRADLEY	9B1-11-02	DOUBLE ROBE HOOK	
AC-07	BRADLEY	7B1-0-0-24-36	FRAMED MIRROR	CENTER ON LAVATORY
AC-08	BRADLEY	962	RECESS-MOUNTED STAINLESS STEEL BABY CHANGING STATION	
AC-09	BRADLEY	9538	CONCEALED MOUNTED 1" SHOWER CURTAIN ROD	PROVIDE CURTAIN HOOKS AND SHOWER CURTAIN, SEE SPECIFICATION 102813
AC-10	<varies>	<varies>	<varies>	
AC-11	BRADLEY	781-24362	CHANNEL FRAMED MIRROR	CENTER ON LAVATORY
AC-12	BRADLEY	6A01-11	SURFACE MOUNT SOAP DISPENSER	
AC-13	BRADLEY	9014	SOAP DISH WITH DRAIN HOLES	
AC-14	BRADLEY	9953	MOP AND BROOM HOLDER	
AC-15	BRADLEY	2496	SURFACE MOUNTED TOWEL DISPENSER WITH SENSOR ACTIVATION	
AC-16	BRADLEY	346-10	SEMI-RECESSED WASTE RECEPTACLE - 12 GAL	

GENERAL TOILET ROOM NOTES

1. ALL PAINTING SHALL BE PERFORMED IN ACCORDANCE WITH THE REQUIREMENTS CONTAINED IN SECTION 099000 OF THE SPECIFICATIONS.
2. THIS DRAWING SERVES AS A GENERAL LIST OF FINISH ITEMS AND IS NOT A LIST OF ALL FINISH ITEMS WITHIN A ROOM OR SPACE. REFER TO ALL CONTRACT DOCUMENT DRAWINGS AND SPECIFICATIONS TO DETERMINE ALL REQUIRED FINISHES AND FINISH ITEMS.
3. MAINTAIN SAME FINISHES ON ALL WALLS WITHIN BATHROOMS.
4. COORDINATE LOCATION OF PLUMBING FIXTURES WITH CONTRACT 'P'
5. PROVIDE 5/8" CEMENT BOARD ON ALL WALLS TO RECEIVE TILE FINISH
6. PROVIDE ALL BLOCKING AND REINFORCING IN WALLS AND CEILINGS AS REQUIRED FOR SECURE MOUNTING OF ALL FIXTURES, TOILET PARTITIONS AND ACCESSORIES.
7. FOR ALL BATHROOM, JANITOR'S CLOSET WALL / PARTITIONS, EXTEND GYPSUM BOARD UP TO THE UNDERSIDE OF THE FLOOR OR ROOF DECK ABOVE.
8. PROVIDE WATERPROOFING MEMBRANE AT ALL TOILET ROOM / BATHROOM FLOORS AND TURN UP WALLS MINIMUM 6". PROVIDE FULL HEIGHT WATERPROOFING MEMBRANE AT SHOWERS AND AT ALL WALLS IN DECON BATHROOM.
9. PROVIDE STAINLESS STEEL SCHLUTER SCHIENE (OR EQUAL) TRANSITIONS AT ALL TILE OUTSIDE CORNERS.

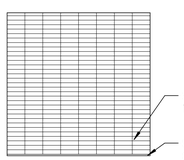

1 Typical Wall Tile Detail
SCALE: 1/4" = 1'-0"

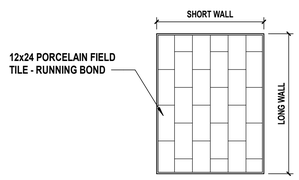

2 Typical Floor Tile Layout
SCALE: 1/4" = 1'-0"

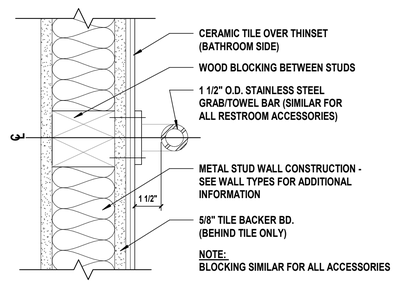

3 Typical Grab Bar Blocking Detail
SCALE: 3" = 1'-0"

TYPICAL MOUNTING HEIGHTS

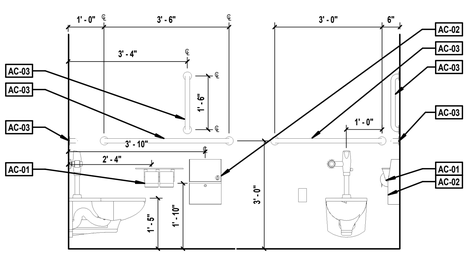

Standard ADA Water Closet
SCALE: 1/2" = 1'-0"

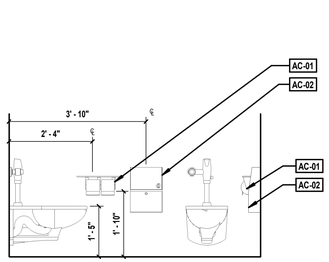

Standard Water Closet
SCALE: 1/2" = 1'-0"

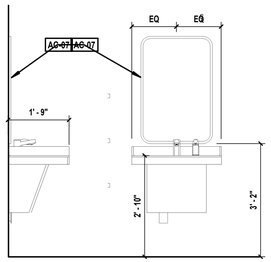

ADA Lavatory
SCALE: 1/2" = 1'-0"

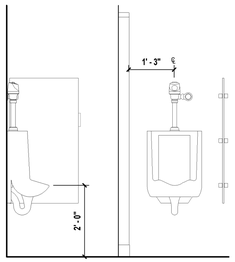

Standard Lavatory
SCALE: 1/2" = 1'-0"

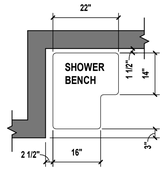

ADA Shower Bench
SCALE: 1/2" = 1'-0"

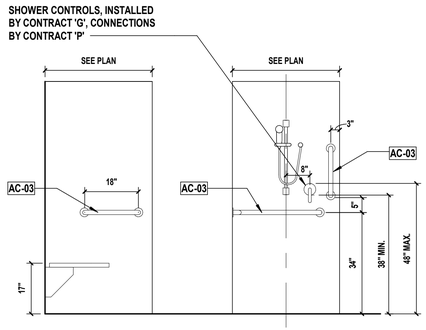

ADA Shower
SCALE: 1/2" = 1'-0"

H2M architects + engineers
538 Broad Hollow Road, 4th Floor East
Melville, NY 11747
631.756.8000 • www.h2m.com
NY Architecture & Landscape Architecture: No Certificate Required
NY Engineering Certificate of Authorization No.: 0018178

CONSULTANTS:

MARK	DATE	DESCRIPTION

REGISTERED ARCHITECT PATRICK O. STONE STATE OF NEW YORK 036954

10/31/2025
Exp. Date

PATRICK O. STONE, R.A.
NY PROFESSIONAL ARCHITECT Lic. No. 036954

"IN ACCORDANCE WITH ARTICLE 145, SECTION 7209 OF THE NYS EDUCATION LAW, ALTERATION OF THIS DOCUMENT EXCEPT BY A LICENSED PROFESSIONAL IS ILLEGAL"

DESIGNED BY:	DRAWN BY:	CHECKED BY:	REVIEWED BY:
DBS/RLG	ANK	DBS	POS
PROJECT No: TRFD 2302	DATE: FEBRUARY 2025	SCALE: AS SHOWN	

CLIENT

THIELLS ROSEVILLE FIRE DISTRICT

NEW 26-100 FIRE HEADQUARTERS

65 W RAMAPO ROAD
GARNERVILLE, NY 10923

CONTRACT

CONTRACT G
GENERAL CONSTRUCTION

STATUS

FINAL BID DOCUMENT

SHEET TITLE

TYPICAL TOILET DETAILS AND NOTES

DRAWING No.

A 412.00

C:\Users\ankel\Documents\TRFD2302_Central23-A_AKelled.rvt

2/25/2025 4:08:32 PM

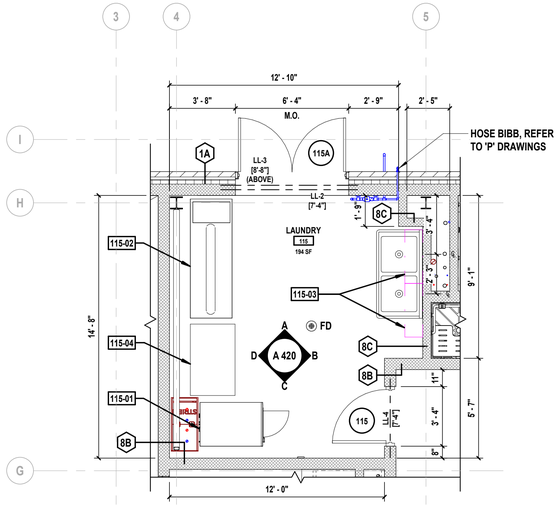

1 Enlarged Laundry Room Plan
SCALE: 1/4" = 1'-0"

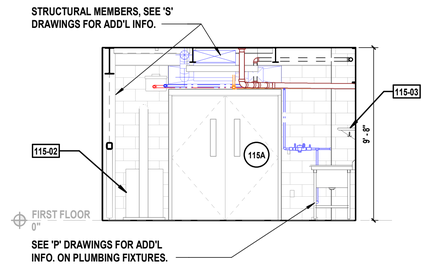

A Interior Elevation
SCALE: 1/4" = 1'-0"

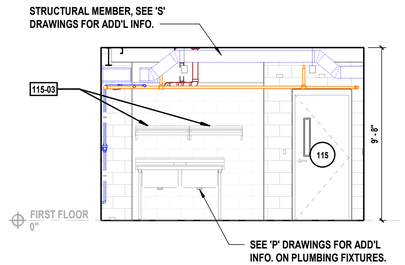

B Interior Elevation
SCALE: 1/4" = 1'-0"

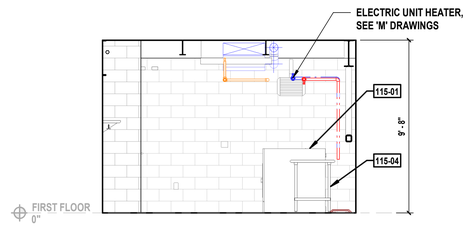

C Interior Elevation
SCALE: 1/4" = 1'-0"

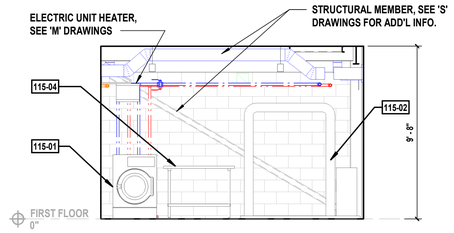

D Interior Elevation
SCALE: 1/4" = 1'-0"

LAUNDRY EQUIPMENT SCHEDULE - ROOM 115

MARK	MANUFACTURER	MODEL	DESCRIPTION	LENGTH	WIDTH	HEIGHT	COMMENTS
115-01	MILNOR CORP	MWT16X5AE2018125D	COMMERCIAL WASHER EXTRACTOR				N.I.C.PROVIDED BY OWNER, CONNECTIONS BY CONTRACT P
115-02	RAM AIR GEAR DRYE	TG-6H	GEAR DRYER	2' - 4"	7" - 10"	6' - 6"	N.I.C. - SHOWN FOR REFERENCE ONLY
115-03	JOHN BOOS	BHS1236PR	STAINLESS STEEL WALL SHELF	1' - 0"	3' - 0"	9 1/2"	N.I.C. PROVIDED BY OWNER
115-04	ADVANCE TABCO	MS-305	WORK TABLE	2' - 6"	4' - 0"	2' - 11 1/2"	N.I.C. - SHOWN FOR REFERENCE ONLY

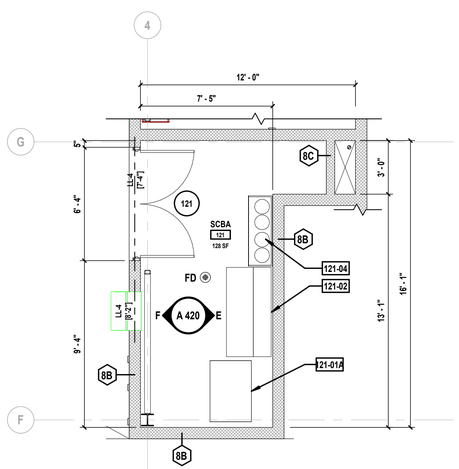

2 Enlarged SCBA Room Plan
SCALE: 1/4" = 1'-0"

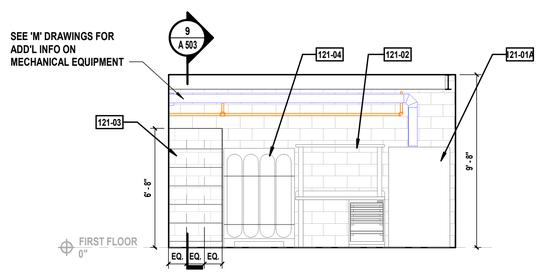

E Interior Elevation
SCALE: 1/4" = 1'-0"

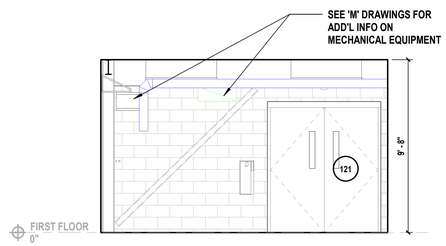

F Interior Elevation
SCALE: 1/4" = 1'-0"

SCBA ROOM EQUIPMENT SCHEDULE - ROOM 121

MARK	MANUFACTURER	MODEL	DESCRIPTION	LENGTH	DEPTH	HEIGHT	COMMENTS
121-01A	MAKO	BAM08H-E3	SCBA FILL STATION	3' - 5"	2' - 4"	5' - 8"	N.I.C. PROVIDED BY OWNER
121-02	-	-	WORK BENCH	5' - 0"	2' - 6"	2' - 10"	N.I.C. PROVIDED BY OWNER
121-03	-	-					CUSTOM BOTTLE STORAGE BY CONTRACT 'G' - SEE DETAILS
121-04	MAKO	-	AIR STORAGE RACK	4' - 0"	1' - 4"	5' - 7"	N.I.C. PROVIDED BY OWNER

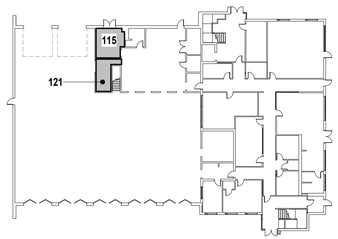

First Floor Key Plan
SCALE: NTS

H2M architects + engineers
538 Broad Hollow Road, 4th Floor East
Melville, NY 11747
631.756.8000 • www.h2m.com
NY Architecture & Landscape Architecture: No Certificate Required
NY Engineering Certificate of Authorization No.: 0018178

CONSULTANTS:

MARK	DATE	DESCRIPTION

REGISTERED ARCHITECT PATRICK O. STONE STATE OF NEW YORK 0396654

10/31/2025
Exp. Date

PATRICK O. STONE, R.A.
NY PROFESSIONAL ARCHITECT Lic. No. 036654

"IN ACCORDANCE WITH ARTICLE 145, SECTION 7209 OF THE NYS EDUCATION LAW, ALTERATION OF THIS DOCUMENT EXCEPT BY A LICENSED PROFESSIONAL IS ILLEGAL."

DESIGNED BY:	DRAWN BY:	CHECKED BY:	REVIEWED BY:
DBS/RLG	ANK	DBS	POS

PROJECT No:	DATE:	SCALE:
TRFD 2302	FEBRUARY 2025	AS SHOWN

CLIENT
THIELLS ROSEVILLE FIRE DISTRICT

NEW 26-100 FIRE HEADQUARTERS

65 W RAMAPO ROAD
GARNERVILLE, NY 10923

CONTRACT
CONTRACT G
GENERAL CONSTRUCTION

STATUS
FINAL BID DOCUMENT

SHEET TITLE
ENLARGED LAUNDRY ROOM & SCBA ROOM PLANS & INTERIOR ELEVATIONS

DRAWING No.
A 420.00

C:\Users\akaled\Documents\TRFD2302_Central23-A_AKaled.rvt
2/25/2025 4:08:40 PM

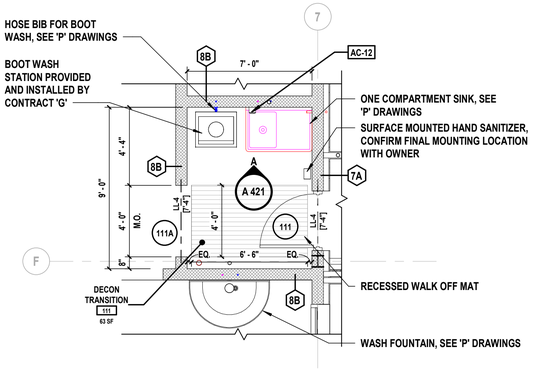

6 Enlarged Decon Transition Plan - 111

SCALE: 1/4" = 1'-0"

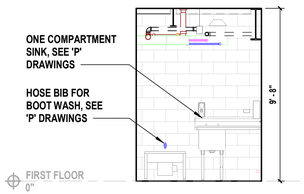

A Interior Elevation

SCALE: 1/4" = 1'-0"

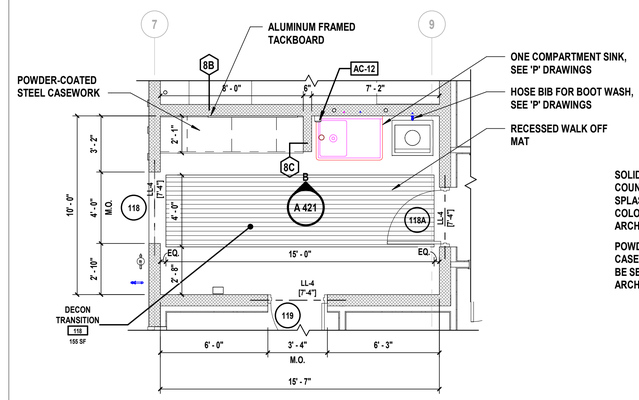

7 Enlarged Decon Transition Plan - 118

SCALE: 1/4" = 1'-0"

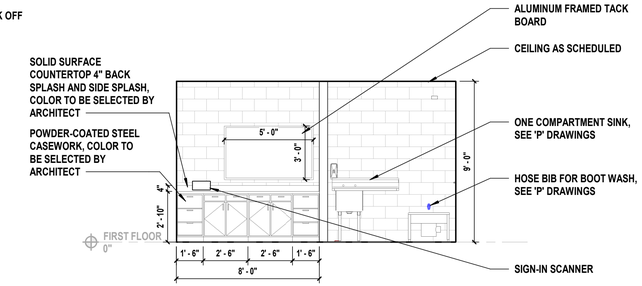

B Interior Elevation

SCALE: 1/4" = 1'-0"

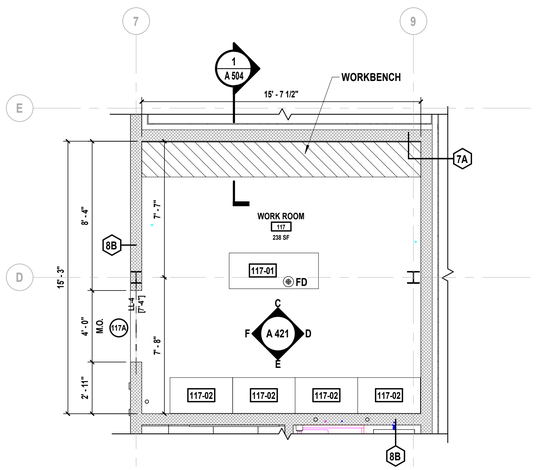

5 Enlarged Work Room Plan

SCALE: 1/4" = 1'-0"

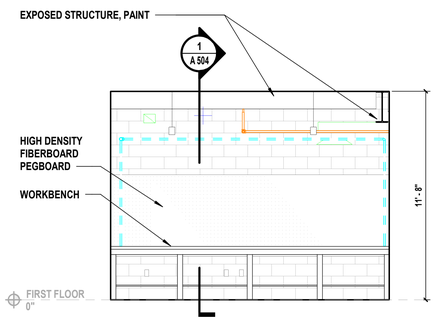

C Interior Elevation

SCALE: 1/4" = 1'-0"

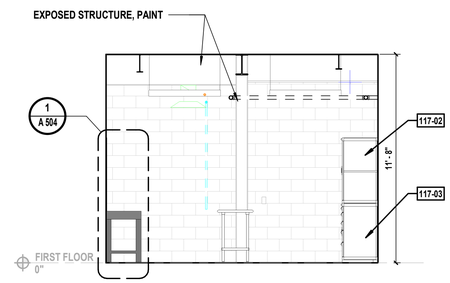

D Interior Elevation

SCALE: 1/4" = 1'-0"

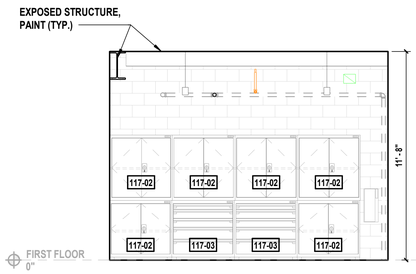

E Interior Elevation

SCALE: 1/4" = 1'-0"

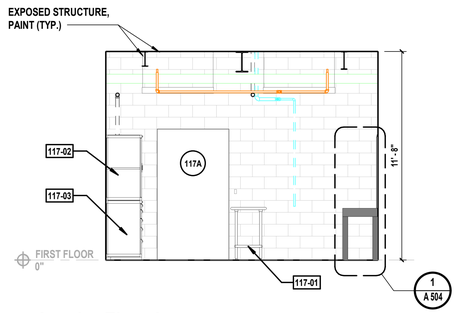

F Interior Elevation

SCALE: 1/4" = 1'-0"

WORK ROOM EQUIPMENT SCHEDULE - ROOM 117							
MARK	MANUFACTURER	MODEL	DESCRIPTION	LENGTH	DEPTH	HEIGHT	COMMENTS
117-01	ADVANCE TABCO	MS-305	WORK TABLE	2' - 0"	5' - 0"	2' - 11 1/2"	N.I.C. - SHOWN FOR REFERENCE ONLY
117-02	-	-	EXISTING HEAVY DUTY CABINET W/ DOORS	3' - 4"	4' - 0"	3' - 4"	N.I.C. PROVIDED BY OWNER
117-03	-	-	EXISTING HEAVY DUTY CABINET W/ DRAWERS	3' - 4"	4' - 0"	3' - 4"	N.I.C. PROVIDED BY OWNER

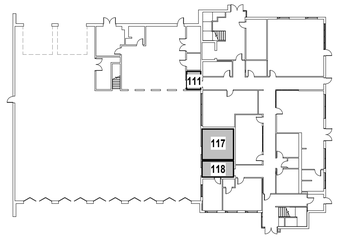

First Floor Key Plan

SCALE: NTS

H 2 M architects + engineers

538 Broad Hollow Road, 4th Floor East
Melville, NY 11747
631.756.8000 • www.h2m.com
NY Architecture & Landscape Architecture: No Certificate Required
NY Engineering Certificate of Authorization No.: 0018178

CONSULTANTS:

MARK	DATE	DESCRIPTION

REGISTERED ARCHITECT PATRICK O. STONE 039654 STATE OF NEW YORK

10/31/2025
Exp. Date

PATRICK O. STONE, R.A.
NY PROFESSIONAL ARCHITECT Lic. No. 039654

"IN ACCORDANCE WITH ARTICLE 145, SECTION 7209 OF THE NYS EDUCATION LAW, ALTERATION OF THIS DOCUMENT EXCEPT BY A LICENSED PROFESSIONAL IS ILLEGAL."

DESIGNED BY:	DRAWN BY:	CHECKED BY:	REVIEWED BY:
DBS/RLG	ANK	DBS	POS

PROJECT No:	DATE:	SCALE:
TRFD 2302	FEBRUARY 2025	AS SHOWN

CLIENT

THIELLS ROSEVILLE FIRE DISTRICT

NEW 26-100 FIRE HEADQUARTERS

THIELLS 26 FD

65 W RAMAPO ROAD
GARNERVILLE, NY 10923

CONTRACT

CONTRACT G
GENERAL CONSTRUCTION

STATUS

FINAL BID DOCUMENT

SHEET TITLE

ENLARGED DECON TRANSITIONS & WORK ROOM PLANS & INTERIOR ELEVATIONS

DRAWING No.

A 421.00

C:\Users\ankel\Documents\TRFD2302_Central23-A_AKelled.rvt
2/25/2025 4:08:45 PM

FOOD SERVICE EQUIPMENT NOTES

1. INSTALL FOOD SERVICE EQUIPMENT LEVEL AND PLUMB, ACCORDING TO MANUFACTURER'S WRITTEN INSTRUCTIONS.
2. CONNECT ALL EQUIPMENT TO UTILITIES AS NEEDED FOR A COMPLETE AND FULLY FUNCTIONAL OPERATION.
3. CONTRACT 'G' IS TO PROVIDE CUT OUTS IN EQUIPMENT AND CABINETRY AS REQUIRED FOR ALL UTILITY CONNECTIONS.
4. PROVIDE CLOSED BUTT AND CONTACT JOINTS THAT DO NOT REQUIRE FILLER, GRIND FIELD WELDS ON STAINLESS STEEL EQUIPMENT UNTIL SMOOTH AND POLISH TO MATCH ADJACENT FINISH.
5. INSTALL EQUIPMENT WITH ACCESS AND MAINTENANCE CLEARANCES THAT COMPLY WITH MANUFACTURER'S WRITTEN INSTALLATION INSTRUCTIONS.
6. INSTALL SEALANT IN JOINTS BETWEEN EQUIPMENT AND ABUTTING SURFACES WITH CONTINUOUS JOINT BACKING, UNLESS OTHER WISE INDICATED. PROVIDE AIRTIGHT, WATERTIGHT, VERMIN-PROOF SANITARY JOINTS.
7. AFTER EQUIPMENT INSTALL IS COMPLETE, REPAIR DAMAGED FINISHES.
8. CLEAN AND ADJUST EQUIPMENT AS REQUIRED TO PRODUCE READY-FOR-USE CONDITION.
9. PROTECT EQUIPMENT FROM DAMAGE DURING REMAINDER OF THE CONSTRUCTION PERIOD.
10. ENGAGE A FACTORY AUTHORIZED SERVICE REPRESENTATIVE TO TRAIN OWNER'S MAINTENANCE PERSONNEL TO ADJUST, OPERATE AND MAINTAIN FOOD SERVICE EQUIPMENT.
11. CONTRACT 'G' TO PROVIDE ALL REQUIRED ACCESSORIES FOR A COMPLETE AND READY-FOR-USE INSTALLATION.

EQUIPMENT SCHEDULE - DAY ROOM 107

MARK	MANUFACTURER	MODEL	DESCRIPTION	LENGTH	WIDTH	HEIGHT	COMMENTS
107-01	TRUE	TBB-2G-HC-LD	GLASS SWING DOOR BACK BAR COOLER WITH LED LIGHTING AND HYDROCARBON REFRIGERANT	2' - 3 3/4"	4' - 10 7/8"	3' - 1"	
107-02	FISHER & PAYKEL APPLIANCES	CMO-24SS-3Y	24" CONVECTION MICROWAVE	1' - 8"	2' - 0"	1' - 2"	

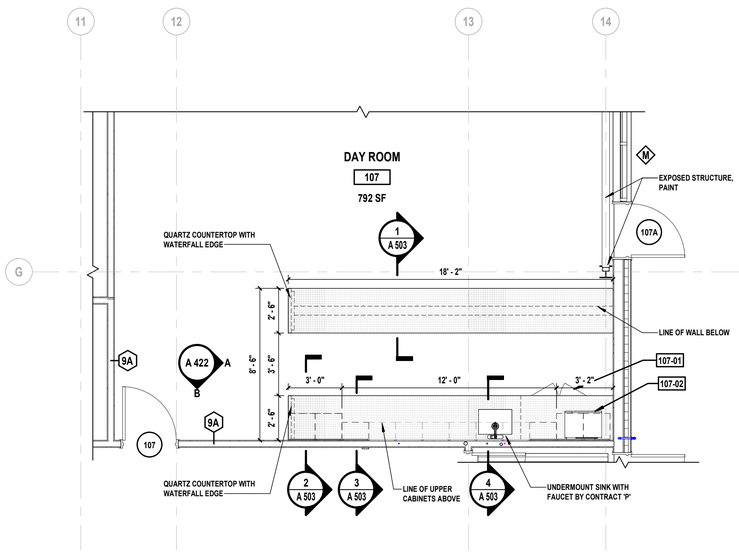

1 Enlarged Day Room Millwork Plan
SCALE: 1/4" = 1'-0"

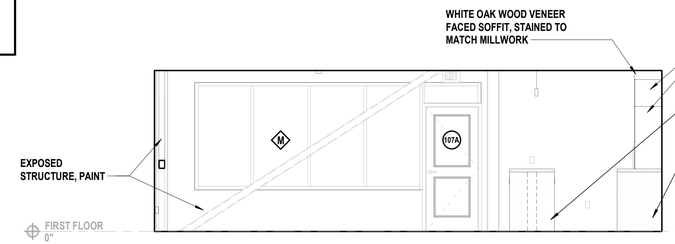

A Interior Elevation
SCALE: 1/4" = 1'-0"

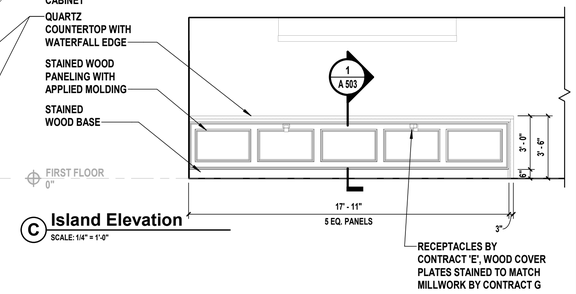

C Island Elevation
SCALE: 1/4" = 1'-0"

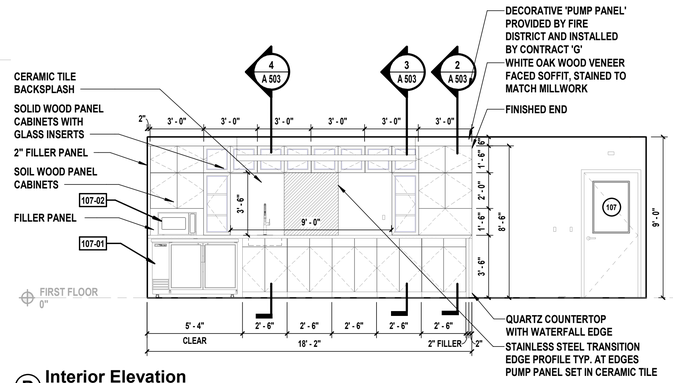

B Interior Elevation
SCALE: 1/4" = 1'-0"

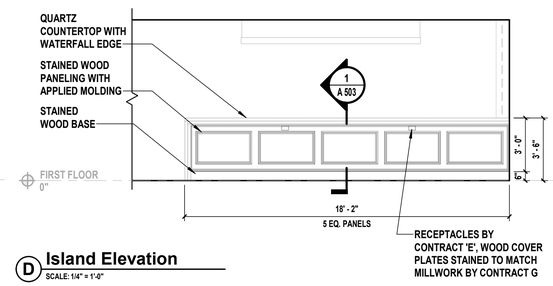

D Island Elevation
SCALE: 1/4" = 1'-0"

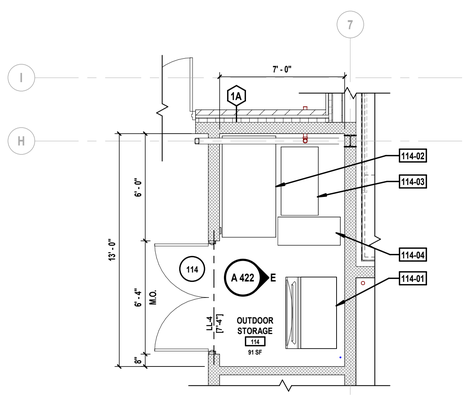

2 Enlarged Outdoor Storage Plan
SCALE: 1/4" = 1'-0"

EQUIPMENT SCHEDULE - OUTDOOR STORAGE 114

MARK	MANUFACTURER	MODEL	DESCRIPTION	LENGTH	WIDTH	HEIGHT	COMMENTS
114-01	MANITOWOC ICE	IDT0750A /D-570	ICE MAKER WITH STORAGE BIN	2' - 10"	4' - 0"	4' - 8"	N.I.C.PROVIDED BY OWNER, CONNECTIONS BY CONTRACT P
114-02	-	-	HOT DOG CART	5' - 8"	3' - 0"	3' - 6"	N.I.C. - SHOWN FOR REFERENCE ONLY
114-03	-	-	POPCORN MACHINE	3' - 10"	2' - 1"	5' - 6"	N.I.C. - SHOWN FOR REFERENCE ONLY
114-04	IGLOO	-	COOLER	1' - 7"	3' - 6"	1' - 8"	N.I.C. - SHOWN FOR REFERENCE ONLY

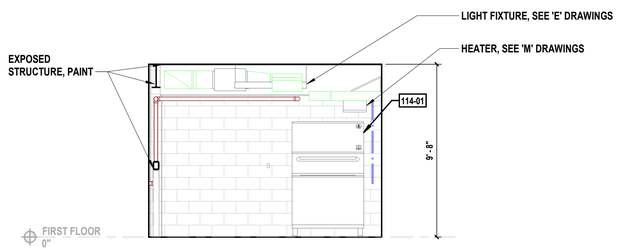

E Interior Elevation
SCALE: 1/4" = 1'-0"

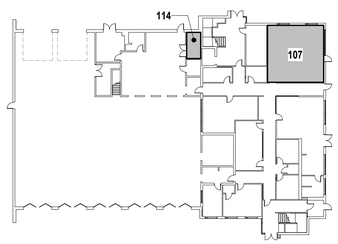

First Floor Key Plan
SCALE: NTS

H2M architects + engineers
538 Broad Hollow Road, 4th Floor East
Melville, NY 11747
631.756.8000 • www.h2m.com
NY Architecture & Landscape Architecture: No Certificate Required
NY Engineering Certificate of Authorization No.: 0018178

CONSULTANTS:

MARK	DATE	DESCRIPTION

REGISTERED ARCHITECT PATRICK O. STONE 0396654 STATE OF NEW YORK

10/31/2025
Exp. Date

PATRICK O. STONE, R.A.
NY PROFESSIONAL ARCHITECT Lic. No. 036654

"IN ACCORDANCE WITH ARTICLE 145, SECTION 7209 OF THE NYS EDUCATION LAW, ALTERATION OF THIS DOCUMENT EXCEPT BY A LICENSED PROFESSIONAL IS ILLEGAL."

DESIGNED BY:	DRAWN BY:	CHECKED BY:	REVIEWED BY:
DBS/RLG	ANK	DBS	POS
PROJECT No: TRFD 2302	DATE: FEBRUARY 2025	SCALE: AS SHOWN	

CLIENT

THIELLS ROSEVILLE FIRE DISTRICT

NEW 26-100 FIRE HEADQUARTERS

65 W RAMAPO ROAD
GARNERVILLE, NY 10923

CONTRACT
CONTRACT G
GENERAL CONSTRUCTION

STATUS
FINAL BID DOCUMENT

SHEET TITLE
ENLARGED OUTDOOR STORAGE & DAY ROOM PLANS, EQUIPMENT SCHEDULE & INTERIOR ELEVATIONS

DRAWING No.
A 422.00

C:\Users\akaled\Documents\TRFD2302_Central23-A_AKaled.rvt
2/25/2025 4:08:51 PM

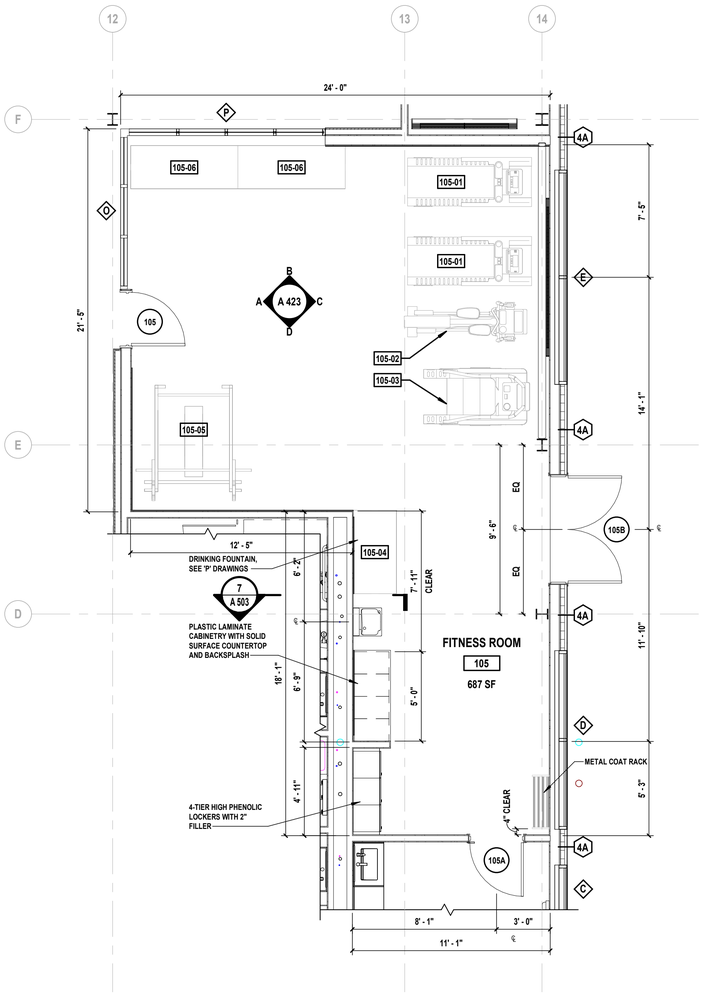

1 Enlarged Fitness Room Plan

SCALE: 1/4" = 1'-0"

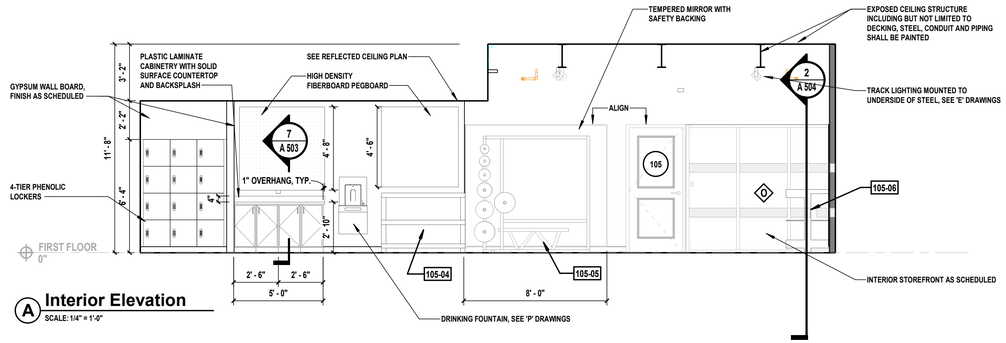

A Interior Elevation

SCALE: 1/4" = 1'-0"

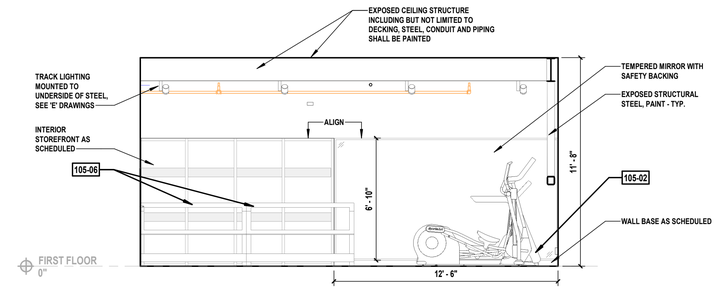

B Interior Elevation

SCALE: 1/4" = 1'-0"

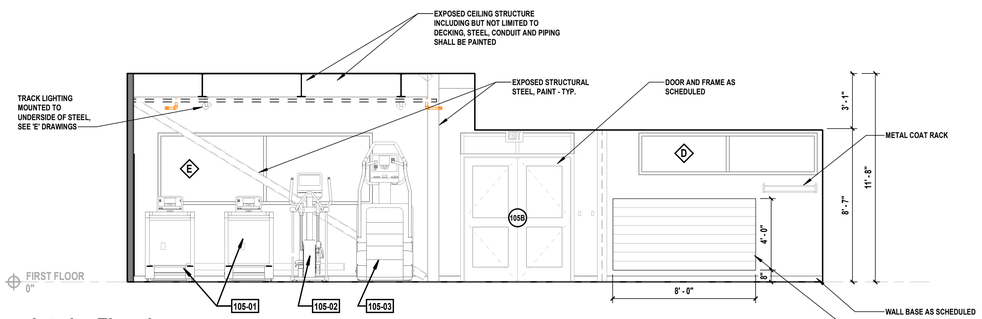

C Interior Elevation

SCALE: 1/4" = 1'-0"

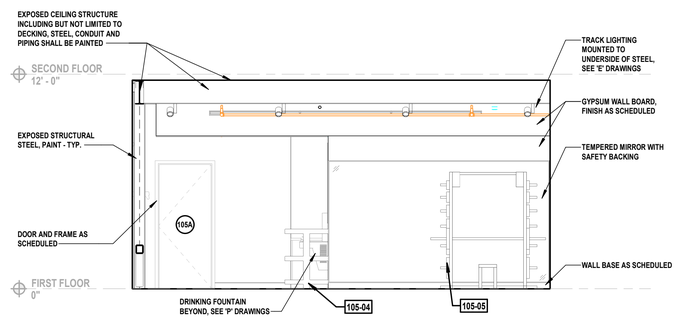

D Interior Elevation

SCALE: 1/4" = 1'-0"

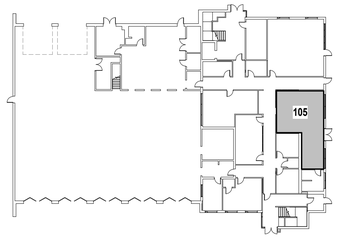

First Floor Key Plan

SCALE: NTS

FITNESS ROOM EQUIPMENT SCHEDULE - ROOM 105

MARK	DESCRIPTION	COMMENTS
105-01	TREADMILL	N.I.C. - SHOWN FOR REFERENCE ONLY
105-02	ELLIPTICAL	N.I.C. - SHOWN FOR REFERENCE ONLY
105-03	STAIR MASTER	N.I.C. - SHOWN FOR REFERENCE ONLY
105-04	WEIGHT RACK	N.I.C. - SHOWN FOR REFERENCE ONLY
105-05	POWER RACK AND BENCH	N.I.C. - SHOWN FOR REFERENCE ONLY
105-06	WEIGHT RACK	N.I.C. - SHOWN FOR REFERENCE ONLY

H2M architects + engineers

538 Broad Hollow Road, 4th Floor East
Melville, NY 11747
631.756.8000 • www.h2m.com
NY Architecture & Landscape Architecture: No Certificate Required
NY Engineering Certificate of Authorization No.: 0018178

CONSULTANTS:

MARK	DATE	DESCRIPTION

REGISTERED ARCHITECT PATRICK O. STONE STATE OF NEW YORK 036954

10/31/2025
Exp. Date

PATRICK O. STONE, R.A.
NY PROFESSIONAL ARCHITECT Lic. No. 036954

"IN ACCORDANCE WITH ARTICLE 145, SECTION 7209 OF THE NYS EDUCATION LAW, ALTERATION OF THIS DOCUMENT EXCEPT BY A LICENSED PROFESSIONAL IS ILLEGAL."

DESIGNED BY:	DRAWN BY:	CHECKED BY:	REVIEWED BY:
DBS/RLG	KAP	DBS	POS

PROJECT No:	DATE:	SCALE:
TRFD 2302	FEBRUARY 2025	AS SHOWN

CLIENT

THIELLS ROSEVILLE FIRE DISTRICT

NEW 26-100 FIRE HEADQUARTERS

THIELLS 26 FD

65 W RAMAPO ROAD
GARNERVILLE, NY 10923

CONTRACT

CONTRACT G
GENERAL CONSTRUCTION

STATUS

FINAL BID DOCUMENT

SHEET TITLE

ENLARGED FITNESS ROOM PLANS & INTERIOR ELEVATIONS

DRAWING No.

A 423.00

C:\Users\akaled\Documents\TRFD2302_Central23-A_AKaled.rvt

2/25/2025 4:08:58 PM

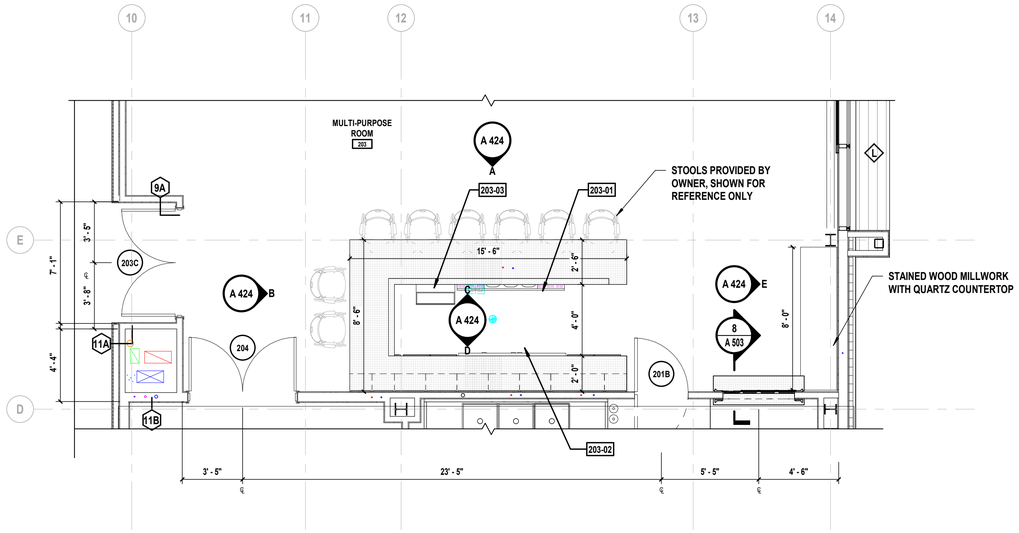

1 **Enlarged Multi-Purpose Room Service Area**
SCALE: 1/4" = 1'-0"

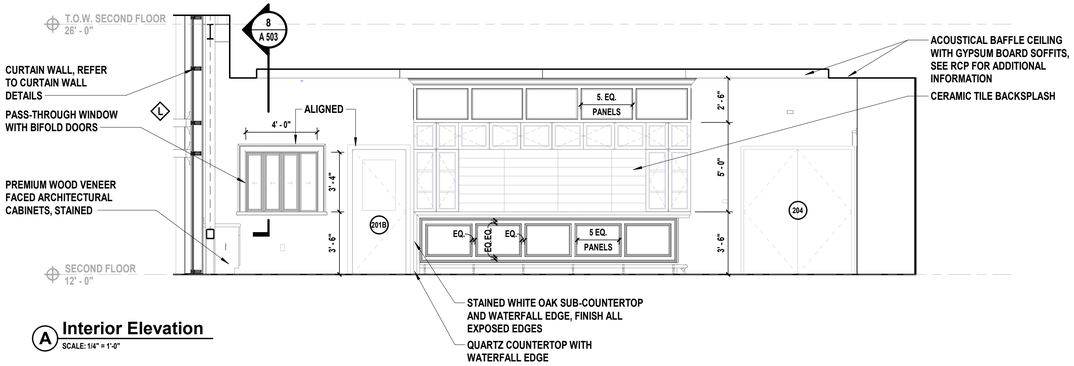

A **Interior Elevation**
SCALE: 1/4" = 1'-0"

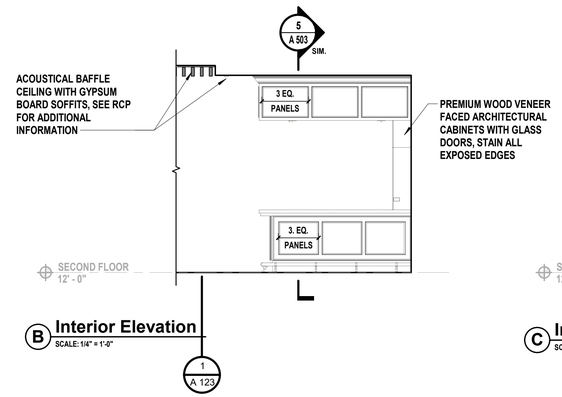

B **Interior Elevation**
SCALE: 1/4" = 1'-0"

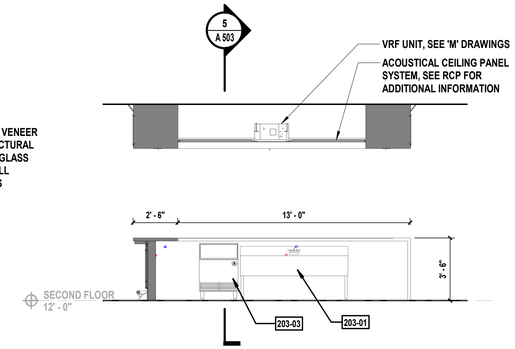

C **Interior Elevation**
SCALE: 1/4" = 1'-0"

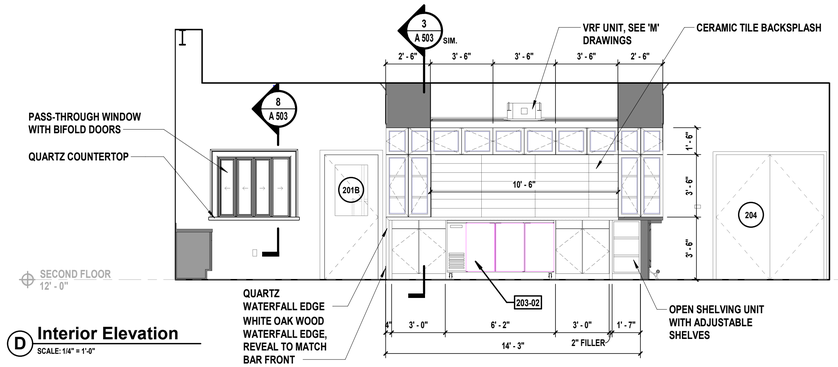

D **Interior Elevation**
SCALE: 1/4" = 1'-0"

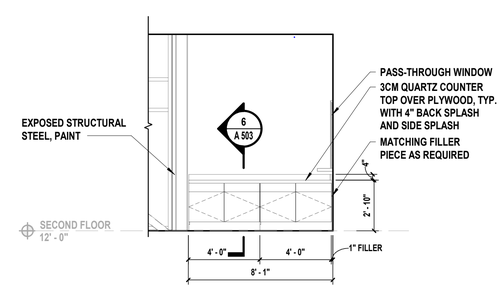

E **Interior Elevation**
SCALE: 1/4" = 1'-0"

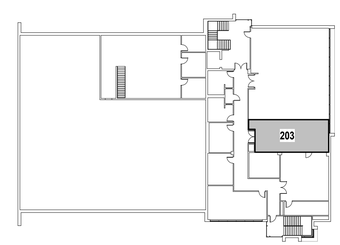

Second Floor Key Plan
SCALE: NTS

EQUIPMENT SCHEDULE - MULTI-PURPOSE ROOM 203

MARK	MANUFACTURER	MODEL	DESCRIPTION	COMMENTS
203-01	KROWNE METAL	KR19-63C	THREE COMPARTMENT BAR SINK	N.I.C. PROVIDED BY OWNER, CONNECTIONS BY CONTRACT P
203-02	TRUE	TBB24-72-3G-Z1-BST-B-1	BACKBAR COOLER	N.I.C. PROVIDED BY OWNER
203-03	MANITOWOC ICE	UDF0140A	UNDERCOUNTER ICE MAKER	N.I.C. PROVIDED BY OWNER, CONNECTIONS BY CONTRACT P

H2M architects + engineers
538 Broad Hollow Road, 4th Floor East
Melville, NY 11747
631.756.8000 • www.h2m.com
NY Architecture & Landscape Architecture: No Certificate Required
NY Engineering Certificate of Authorization No.: 0018178

CONSULTANTS:

MARK	DATE	DESCRIPTION

REGISTERED ARCHITECT PATRICK O. STONE STATE OF NEW YORK 039654

10/31/2025
Exp. Date

PATRICK O. STONE, R.A.
NY PROFESSIONAL ARCHITECT Lic. No. 039654

"IN ACCORDANCE WITH ARTICLE 145, SECTION 7209 OF THE NYS EDUCATION LAW, ALTERATION OF THIS DOCUMENT EXCEPT BY A LICENSED PROFESSIONAL IS ILLEGAL."

DESIGNED BY:	DRAWN BY:	CHECKED BY:	REVIEWED BY:
DBS/RLG	ANK	DBS	POS
PROJECT No: TRFD 2302	DATE: FEBRUARY 2025	SCALE: AS SHOWN	

CLIENT

THIELLS ROSEVILLE FIRE DISTRICT

NEW 26-100 FIRE HEADQUARTERS

THIELLS 26 FD

65 W RAMAPO ROAD
GARNERVILLE, NY 10923

CONTRACT

CONTRACT G
GENERAL CONSTRUCTION

STATUS

FINAL BID DOCUMENT

SHEET TITLE

ENLARGED MULTI-PURPOSE ROOM SERVICE AREA & INTERIOR ELEVATIONS

DRAWING No.

A 424.00

C:\Users\akiled\Documents\TRFD2302_Central23-A_AKiled.rvt
2/25/2025 4:09:03 PM

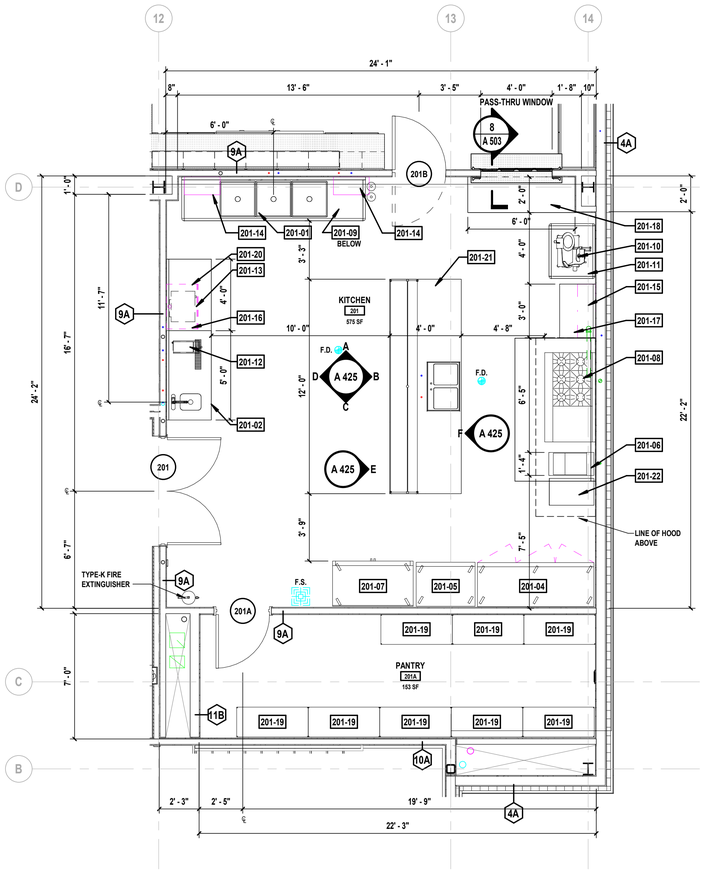

1 Enlarged Kitchen Floor Plan

SCALE: 1/4" = 1'-0"

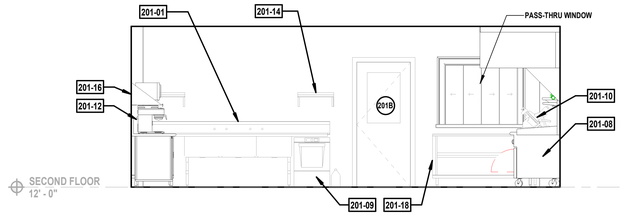

A Interior Elevation

SCALE: 1/4" = 1'-0"

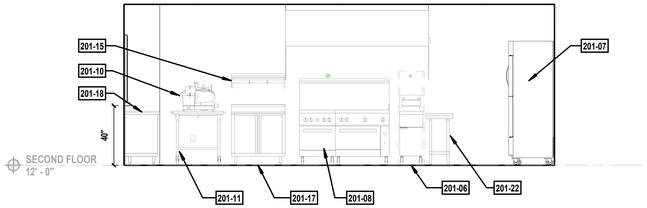

B Interior Elevation

SCALE: 1/4" = 1'-0"

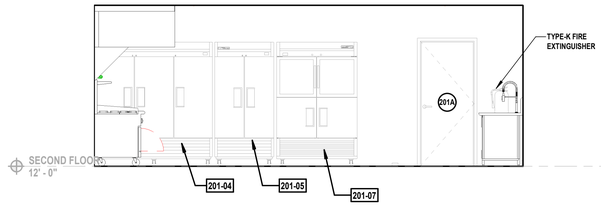

C Interior Elevation

SCALE: 1/4" = 1'-0"

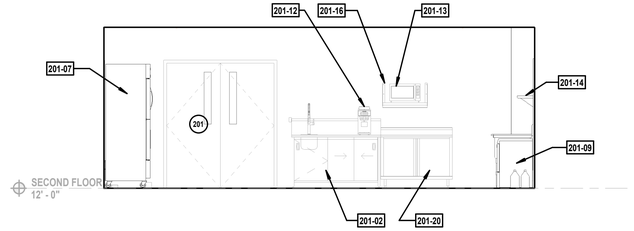

D Interior Elevation

SCALE: 1/4" = 1'-0"

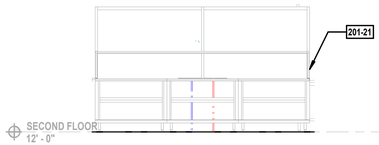

E Island Elevation

SCALE: 1/4" = 1'-0"

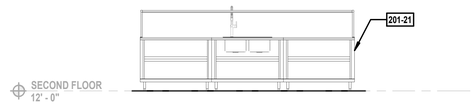

F Interior Elevation

SCALE: 1/4" = 1'-0"

FOOD SERVICE EQUIPMENT NOTES

1. INSTALL FOOD SERVICE EQUIPMENT LEVEL AND PLUMB, ACCORDING TO MANUFACTURER'S WRITTEN INSTRUCTIONS.
2. CONNECT ALL EQUIPMENT TO UTILITIES AS NEEDED FOR A COMPLETE AND FULLY FUNCTIONAL OPERATION.
3. CONTRACT 'G' IS TO PROVIDE CUT OUTS IN EQUIPMENT AND CABINETRY AS REQUIRED FOR ALL UTILITY CONNECTIONS.
4. PROVIDE CLOSED BUTT AND CONTACT JOINTS THAT DO NOT REQUIRE FILLER, GRIND FIELD WELDS ON STAINLESS STEEL EQUIPMENT UNTIL SMOOTH AND POLISH TO MATCH ADJACENT FINISH.
5. INSTALL EQUIPMENT WITH ACCESS AND MAINTENANCE CLEARANCES THAT COMPLY WITH MANUFACTURER'S WRITTEN INSTALLATION INSTRUCTIONS.
6. INSTALL SEALANT IN JOINTS BETWEEN EQUIPMENT AND ABUTTING SURFACES WITH CONTINUOUS JOINT BACKING, UNLESS OTHER WISE INDICATED. PROVIDE AIRTIGHT, WATERTIGHT, VERMIN-PROOF SANITARY JOINTS.
7. AFTER EQUIPMENT INSTALL IS COMPLETE, REPAIR DAMAGED FINISHES.
8. CLEAN AND ADJUST EQUIPMENT AS REQUIRED TO PRODUCE READY-FOR-USE CONDITION.
9. PROTECT EQUIPMENT FROM DAMAGE DURING REMAINDER OF THE CONSTRUCTION PERIOD.
10. ENGAGE A FACTORY AUTHORIZED SERVICE REPRESENTATIVE TO TRAIN OWNER'S MAINTENANCE PERSONNEL TO ADJUST, OPERATE AND MAINTAIN FOOD SERVICE EQUIPMENT.
11. CONTRACT 'G' TO PROVIDE ALL REQUIRED ACCESSORIES FOR A COMPLETE AND READY-FOR-USE INSTALLATION.

EQUIPMENT SCHEDULE - KITCHEN 201

MARK	MANUFACTURER	MODEL	DESCRIPTION	COMMENTS
201-01	JOHN BOOS	3B244-2D24	SINK, 3 COMPARTMENT	WITH (2) KROWNE 18-706L FAUCETS. N.I.C. PROVIDED BY OWNER, CONNECTIONS BY CONTRACT P
201-02	ADVANCE TABCO		ENCLOSED BASE WITH DROP-IN HAND SINK	EXISTING TO BE REUSED, CONNECTIONS BY CONTRACT P
201-04	TRUE	T-72-HC	REACH-IN SOLID SWING DOOR REFRIGERATOR	EXISTING TO BE REUSED
201-05	TRUE	TS-35F-HC	REACH-IN SOLID SWING DOOR FREEZER	N.I.C. PROVIDED BY OWNER
201-06	VULCAN	1GR45M	FREE STANDING GAS FRYER	EXISTING TO BE REUSED
201-07	TRUE	TS-49-2-G-2-HC-FGD01	REACH-IN COMBINATION HAFT SWING DOOR	N.I.C. PROVIDED BY OWNER
201-08	Vulcan	60SS-6B-24G	60" WIDE GAS RANGE (6 BURNER, 24" GRIDDLE, 2 OVENS)	N.I.C. PROVIDED BY OWNER, CONNECTIONS BY CONTRACT P
201-09	HOBART	LXnH-208V	UNDERCOUNTER DISHWASHER	N.I.C.PROVIDED BY OWNER, CONNECTIONS BY CONTRACT P
201-10	HOBART	EDGE 13	ELECTRIC SLICER	N.I.C. PROVIDED BY OWNER
201-11	JOHN BOOS	DST6-3037SBW-C	SORTING TABLE WITH CASTERS	N.I.C. PROVIDED BY OWNER
201-12	BUNN	CWTF35-3T	AUTOMATIC COFFEE BREWER (2U/1L WARMER)	N.I.C. PROVIDED BY OWNER
201-13	VOLLRATH	40819	MICROWAVE	N.I.C. PROVIDED BY OWNER
201-14	JOHN BOOS	BHS1224PR	STAINLESS STEEL WALL SHELF	N.I.C. PROVIDED BY OWNER
201-15	JOHN BOOS	BHS1236PR	STAINLESS STEEL WALL SHELF	N.I.C. PROVIDED BY OWNER
201-16	JOHN BOOS	BMS2030	STAINLESS MICROWAVE SHELF	N.I.C. PROVIDED BY OWNER
201-17	JOHN BOOS	4CH4	STAINLESS MODULAR BASE WORK TABLE W/ 5" BACKSPLASH - HINGED DOORS W/ DRAWERS	SEE PLAN FOR SIZES, N.I.C. PROVIDED BY OWNER
201-18	JOHN BOOS	4CO4-2472-1S	STAINLESS MODULAR BASE WORK TABLE W/ 5" BACK SPLASH - OPEN BASE, INTERMEDIATE SHELF	SEE PLAN FOR SIZES, N.I.C. PROVIDED BY OWNER
201-19	-	-	METAL SHELVING RACKS	EXISTING TO BE REUSED
201-20	ADVANCE TABCO		STAINLESS MODULAR BASE CABINET W/ 5" BACKSPLASH - HINGED DOORS W/ DRAWERS	EXISTING TO BE REUSED
201-21	JOHN BOOS	CUSTOM	CUSTOM CENTER ISLAND CONFIGURATION WITH INTEGRAL SINK, UNDERSHELF, TABLE MOUNTED OVERSHELF & POT RACK	N.I.C. PROVIDED BY OWNER, CONNECTIONS BY CONTRACT P
201-22	JOHN BOOS	EFT8-3018	WORK TABLE-FILLER	N.I.C. PROVIDED BY OWNER

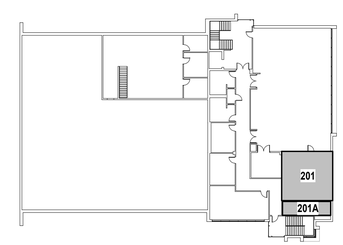

Second Floor Key Plan

SCALE: NTS

H2M architects + engineers

538 Broad Hollow Road, 4th Floor East
Melville, NY 11747
631.756.8000 • www.h2m.com
NY Architecture & Landscape Architecture: No Certificate Required
NY Engineering Certificate of Authorization No.: 0018178

CONSULTANTS:

MARK	DATE	DESCRIPTION

REGISTERED ARCHITECT PATRICK O. STONE STATE OF NEW YORK 036954

10/31/2025
Exp. Date

PATRICK O. STONE, R.A.
NY PROFESSIONAL ARCHITECT Lic. No. 036954

"IN ACCORDANCE WITH ARTICLE 145, SECTION 7209 OF THE NYS EDUCATION LAW, ALTERATION OF THIS DOCUMENT EXCEPT BY A LICENSED PROFESSIONAL IS ILLEGAL"

DESIGNED BY:	DRAWN BY:	CHECKED BY:	REVIEWED BY:
DBS/RLG	ANK	DBS	POS
PROJECT No: TRFD 2302	DATE: FEBRUARY 2025	SCALE: AS SHOWN	

CLIENT

THIELLS ROSEVILLE FIRE DISTRICT

NEW 26-100 FIRE HEADQUARTERS

THIELLS 26 FD

65 W RAMAPO ROAD
GARNERVILLE, NY 10923

CONTRACT

CONTRACT G
GENERAL CONSTRUCTION

STATUS

FINAL BID DOCUMENT

SHEET TITLE

ENLARGED KITCHEN PLAN, INTERIOR ELEVATIONS & EQUIPMENT SCHEDULE

DRAWING No.

A 425.00

C:\Users\akaled\Documents\TRFD2302_Central23-A_AKaled.rvt
2/25/2025 4:09:10 PM

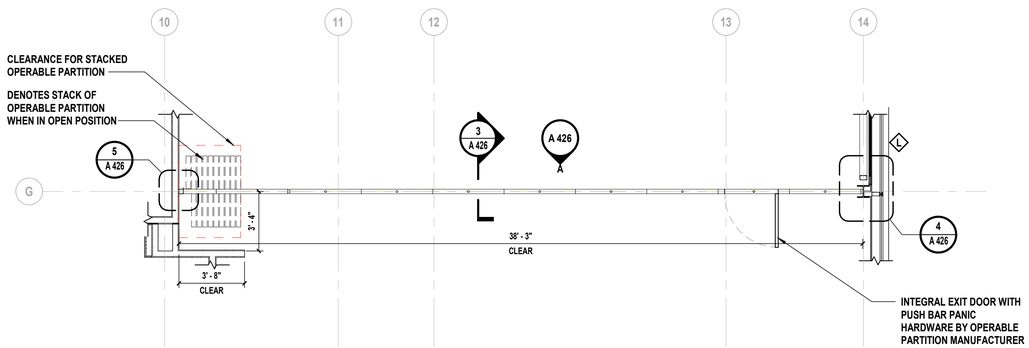

1 Enlarged Operable Partition Plan

SCALE: 1/4" = 1'-0"

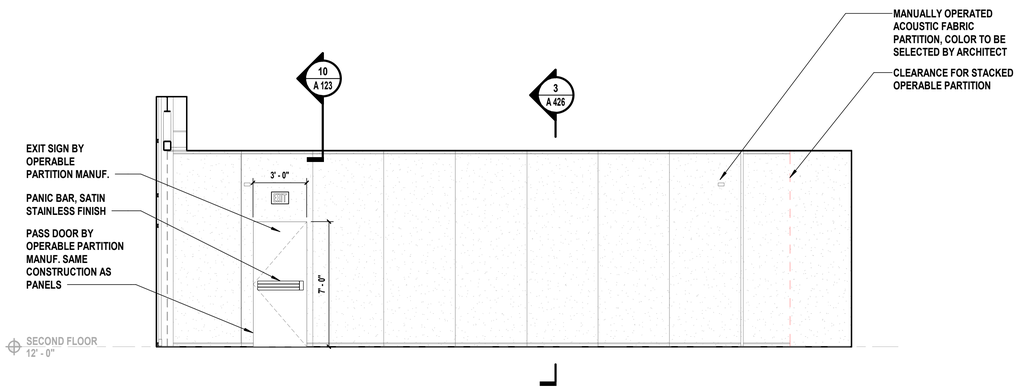

A Operable Partition Elevation

SCALE: 1/4" = 1'-0"

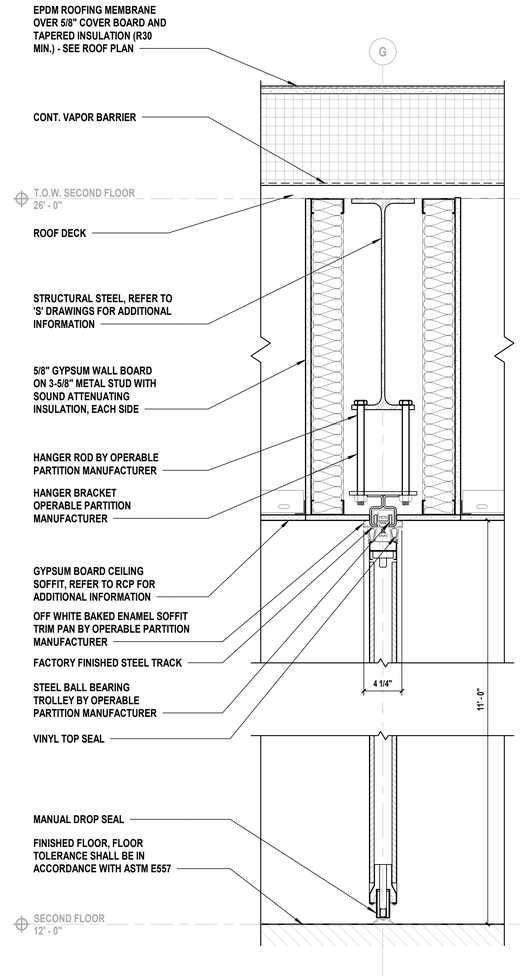

3 Operable Partition Section

SCALE: 1 1/2" = 1'-0"

OPERABLE PARTITION NOTES

1. CONTRACT 'G' TO COORDINATE OPERABLE PARTITION ATTACHMENT TO STRUCTURAL STEEL AND ASSOCIATED HANGERS.
2. CONTRACT 'G' TO COORDINATE REQUIRED CLEAR DIMENSION FOR STACKING WITH OPERABLE PARTITION MANUFACTURER, DIMENSIONS SHOWN ARE FOR BASIS-OF-DESIGN REFERENCE ONLY.
3. OPERABLE PARTITION JAMB LOCATIONS SHALL RECEIVE NO WALL BASE, FINISH REMAINDER OF WALL AS SCHEDULED.
4. CONTRACT 'G' TO PROVIDE SECONDARY BLOCKING IN WALLS AT OPERABLE WALL JAMB LOCATIONS.
5. CONTRACT 'G' SHALL VERIFY ALL ROUGH OPENING DIMENSIONS PRIOR TO ORDERING MATERIALS.

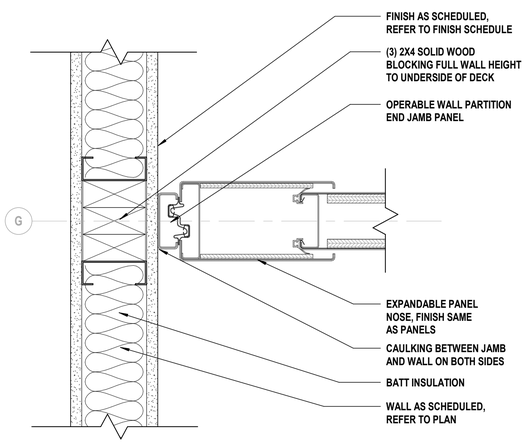

5 Adjustable End Jamb

SCALE: 3" = 1'-0"

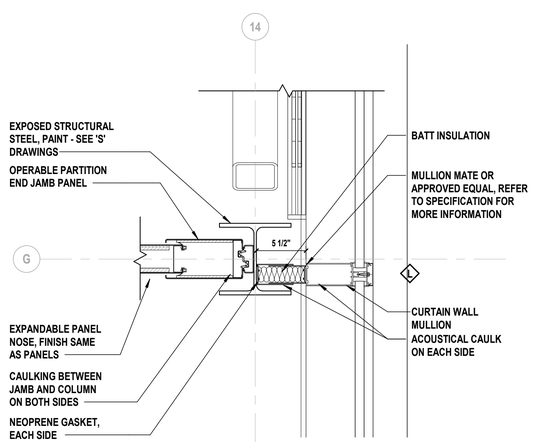

4 Column To Mullion Detail

SCALE: 1 1/2" = 1'-0"

H2M architects + engineers

538 Broad Hollow Road, 4th Floor East
Melville, NY 11747
631.756.8000 • www.h2m.com
NY Architecture & Landscape Architecture: No Certificate Required
NY Engineering Certificate of Authorization No.: 0018178

CONSULTANTS:

MARK	DATE	DESCRIPTION

REGISTERED ARCHITECT PATRICK OTTO STONE 039654 STATE OF NEW YORK

10/31/2025
Exp. Date

PATRICK O. STONE, R.A.
NY PROFESSIONAL ARCHITECT Lic. No. 039654

"IN ACCORDANCE WITH ARTICLE 145, SECTION 7209 OF THE NYS EDUCATION LAW, ALTERATION OF THIS DOCUMENT EXCEPT BY A LICENSED PROFESSIONAL IS ILLEGAL"

DESIGNED BY:	DRAWN BY:	CHECKED BY:	REVIEWED BY:
DBS/RLG	ANK	DBS	POS

PROJECT No:	DATE:	SCALE:
TRFD 2302	FEBRUARY 2025	AS SHOWN

CLIENT

THIELLS ROSEVILLE FIRE DISTRICT

NEW 26-100 FIRE HEADQUARTERS

THIELLS 26 FD

65 W RAMAPO ROAD
GARNERVILLE, NY 10923

CONTRACT

CONTRACT G
GENERAL CONSTRUCTION

STATUS

FINAL BID DOCUMENT

SHEET TITLE

ENLARGED OPERABLE PARTITION PLAN, ELEVATIONS AND DETAILS

DRAWING No.

A 426.00

C:\Users\akeid\Documents\TRFD2302_Central23-A_AKeid.rvt

2/25/2025 4:09:14 PM

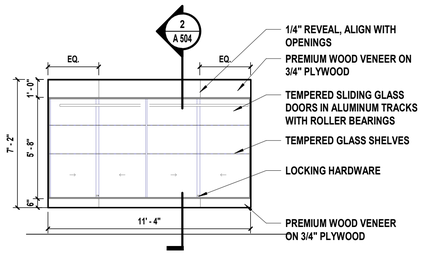

1 **Display Case Elevation - Corridor**
SCALE: 1/4" = 1'-0"

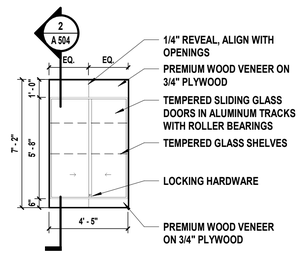

2 **Display Case Elevation - Stair A**
SCALE: 1/4" = 1'-0"

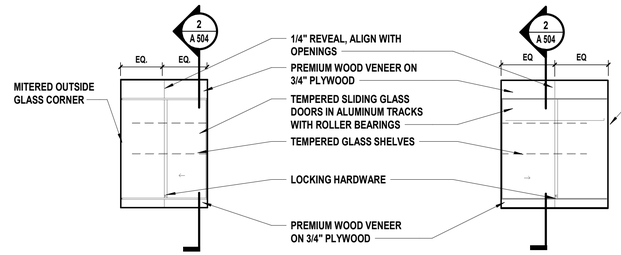

3 **Display Case Elevation - Stair B**
SCALE: 1/4" = 1'-0"

4 **Display Case Elevation - Stair B**
SCALE: 1/4" = 1'-0"

C:\Users\akiled\Documents\TRFD2302_Central23-A_AKiled.rvt

2/25/2025 4:09:17 PM

H 2 M architects + engineers

538 Broad Hollow Road, 4th Floor East
Melville, NY 11747
631.756.8000 • www.h2m.com
NY Architecture & Landscape Architecture: No Certificate Required
NY Engineering Certificate of Authorization No.: 0018178

CONSULTANTS:

MARK	DATE	DESCRIPTION

REGISTERED ARCHITECT PATRICK O. STONE STATE OF NEW YORK 039654

10/31/2025
Exp. Date

PATRICK O. STONE, R.A.
NY PROFESSIONAL ARCHITECT Lic. No. 039654

"IN ACCORDANCE WITH ARTICLE 145, SECTION 7209 OF THE NYS EDUCATION LAW, ALTERATION OF THIS DOCUMENT EXCEPT BY A LICENSED PROFESSIONAL IS ILLEGAL."

DESIGNED BY:	DRAWN BY:	CHECKED BY:	REVIEWED BY:
DBS/RLG	KAP	DBS	POS

PROJECT No:	DATE:	SCALE:
TRFD 2302	FEBRUARY 2025	AS SHOWN

CLIENT

THIELLS ROSEVILLE FIRE DISTRICT

NEW 26-100 FIRE HEADQUARTERS

65 W RAMAPO ROAD GARNERVILLE, NY 10923

CONTRACT

CONTRACT G GENERAL CONSTRUCTION

STATUS

FINAL BID DOCUMENT

SHEET TITLE

DISPLAY CASE INTERIOR ELEVATIONS

DRAWING No.

A 427.00

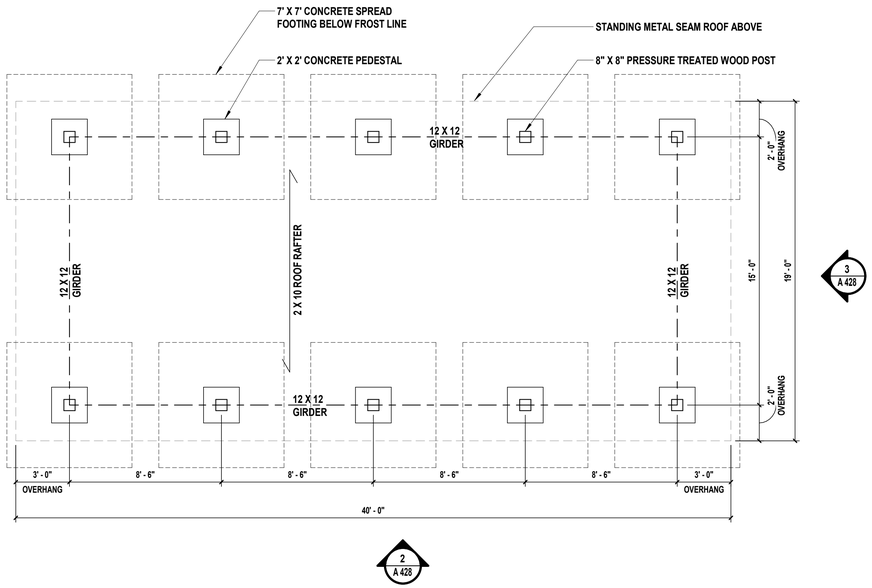

1 Pavilion Floor Plan

SCALE: 1/4" = 1'-0"

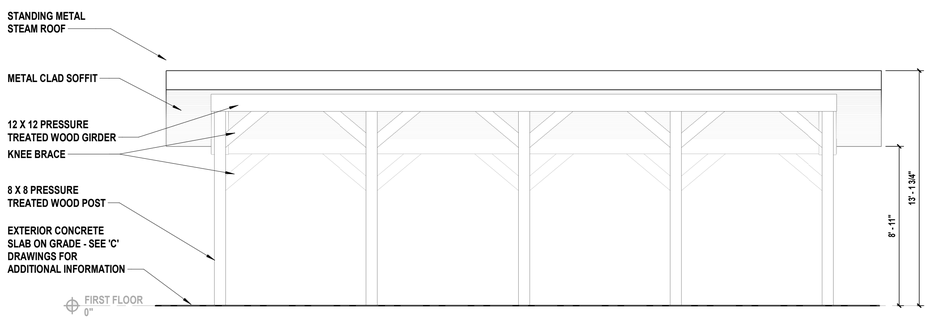

2 Pavilion West Elevation

SCALE: 1/4" = 1'-0"

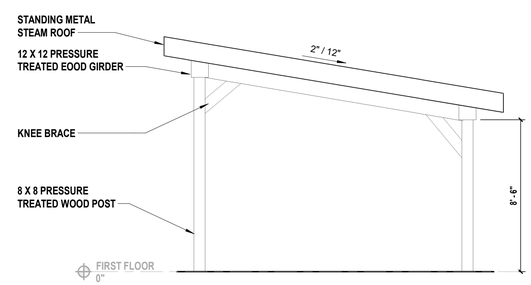

3 Pavilion South Elevation

SCALE: 1/4" = 1'-0"

GENERAL NOTES

1. ALL STRUCTURAL MEMBERS SHOWN ON THIS SHEET ARE SHOWN FOR CONTRACTOR PRICING ONLY. ACTUAL SIZES AND REINFORCEMENT OFMEMBERS ARE TO BE DESIGNED BY CONTRACTORS EGINEER AND SENT TO EOR FOR APPROVAL. SEE S 001 FOR STRUCTURAL DESIGN CRITERIA.

H2M architects + engineers

538 Broad Hollow Road, 4th Floor East
Melville, NY 11747
631.756.8000 • www.h2m.com
NY Architecture & Landscape Architecture: No Certificate Required
NY Engineering Certificate of Authorization No.: 0018178

CONSULTANTS:

MARK	DATE	DESCRIPTION

REGISTERED ARCHITECT PATRICK O. STONE STATE OF NEW YORK 036954

10/31/2025
Exp. Date

PATRICK O. STONE, R.A.
NY PROFESSIONAL ARCHITECT Lic. No. 036954

"IN ACCORDANCE WITH ARTICLE 145, SECTION 7209 OF THE NYS EDUCATION LAW, ALTERATION OF THIS DOCUMENT EXCEPT BY A LICENSED PROFESSIONAL IS ILLEGAL."

DESIGNED BY:	DRAWN BY:	CHECKED BY:	REVIEWED BY:
DBS/RLG	ANK	DBS	POS
PROJECT No: TRFD 2302	DATE: FEBRUARY 2025		SCALE: AS SHOWN

CLIENT

THIELLS ROSEVILLE FIRE DISTRICT

NEW 26-100 FIRE HEADQUARTERS

THIELLS 26 FD

65 W RAMAPO ROAD
GARNERVILLE, NY 10923

CONTRACT

CONTRACT G
GENERAL CONSTRUCTION

STATUS

FINAL BID DOCUMENT

SHEET TITLE

ENLARGED EXTERIOR PAVILION PLAN AND ELEVATIONS

DRAWING No.

A 428.00

C:\Users\akaled\Documents\TRFD2302_Central23-A_AKaled.rvt

2/25/2025 4:09:19 PM

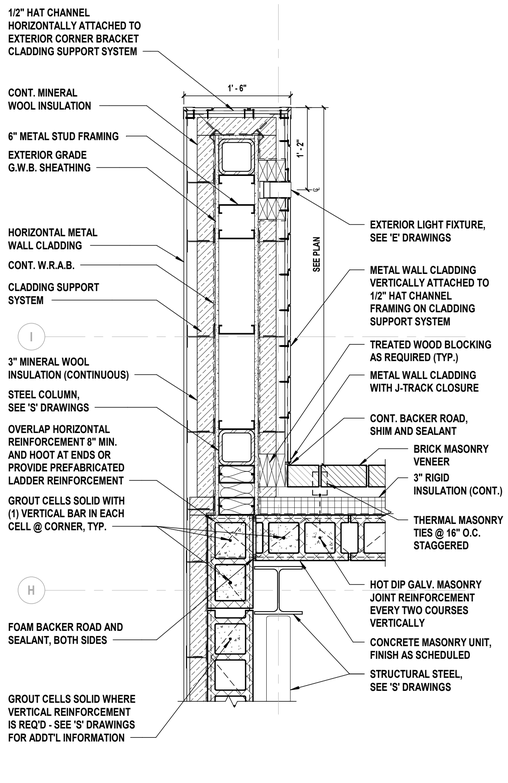

1 Enlarged Plan Detail @ Apparatus Bay
SCALE: 1" = 1'-0"

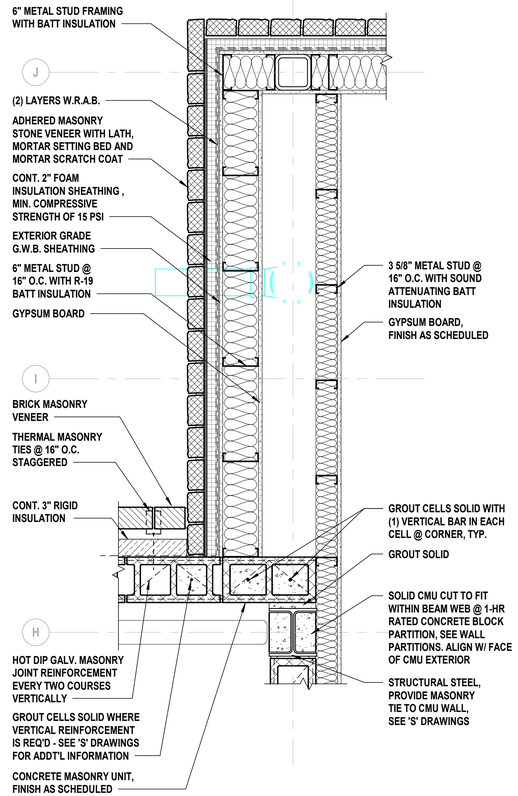

2 Enlarged Plan Detail @ Stair 'B'
SCALE: 1" = 1'-0"

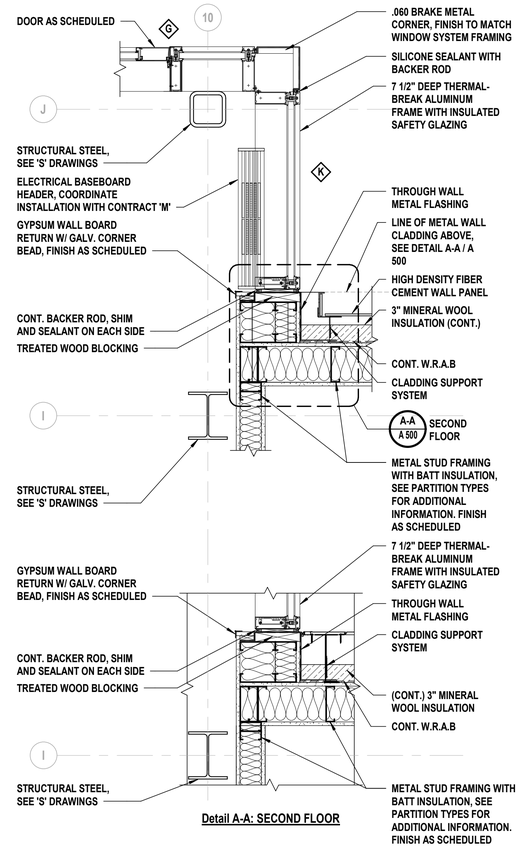

Detail A-A: SECOND FLOOR

3 Enlarged Plan Detail @ Corner Curtain Wall
SCALE: 1" = 1'-0"

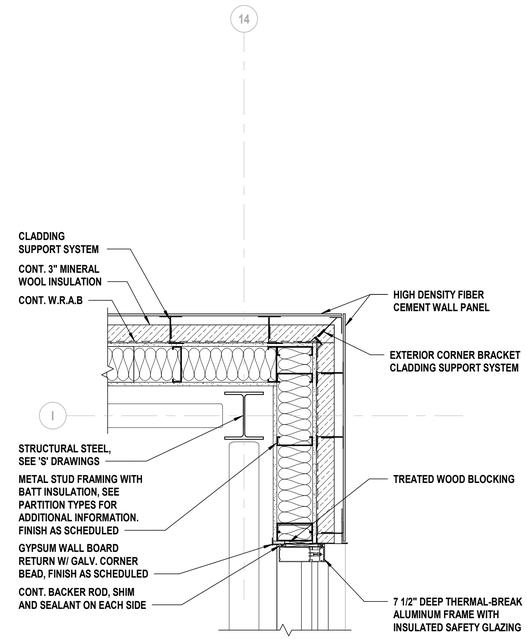

4 Enlarged Plan Detail
SCALE: 1" = 1'-0"

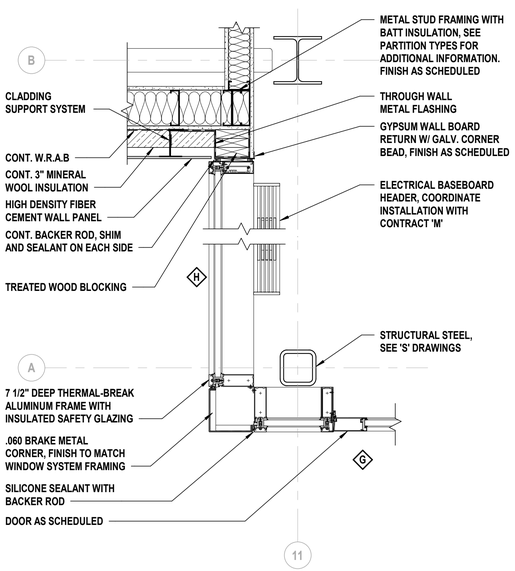

5 Enlarged Plan Detail @ Corner Curtain Wall
SCALE: 1" = 1'-0"

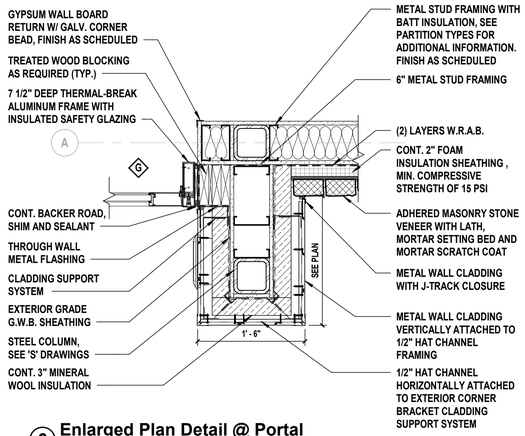

6 Enlarged Plan Detail @ Portal
SCALE: 1" = 1'-0"

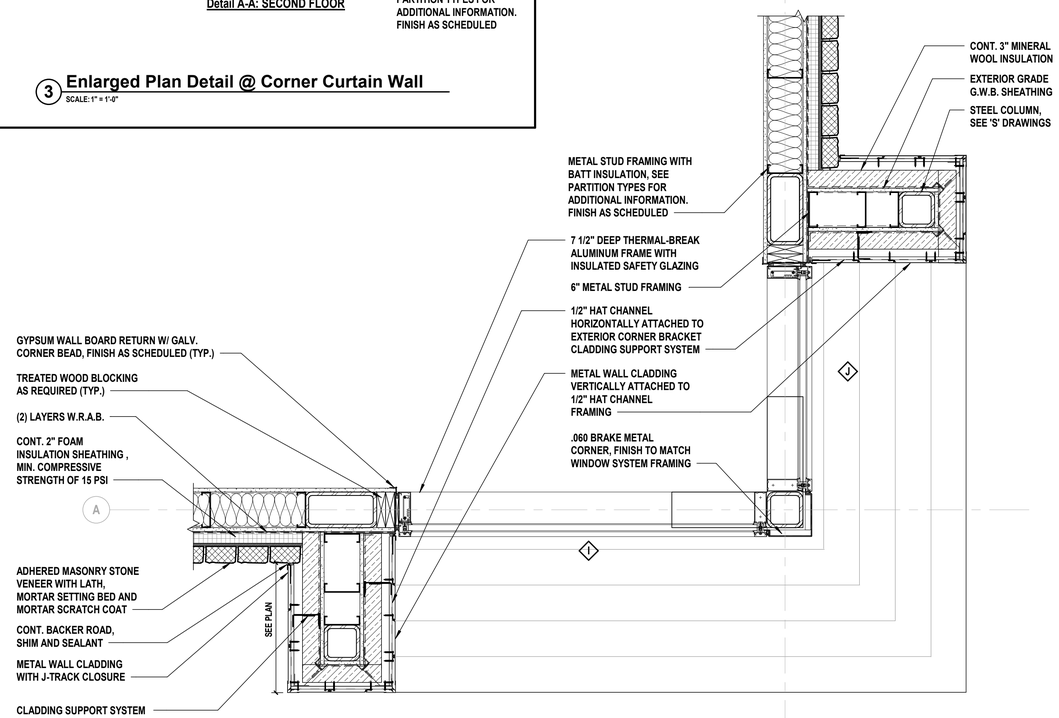

7 Stair A Portal Plan Detail
SCALE: 1" = 1'-0"

H2M architects + engineers
538 Broad Hollow Road, 4th Floor East
Melville, NY 11747
631.756.8000 • www.h2m.com
NY Architecture & Landscape Architecture: No Certificate Required
NY Engineering Certificate of Authorization No.: 0018178

CONSULTANTS:

MARK	DATE	DESCRIPTION

REGISTERED ARCHITECT PATRICK O. STONE STATE OF NEW YORK 036954

10/31/2025
Exp. Date

PATRICK O. STONE, R.A.
NY PROFESSIONAL ARCHITECT Lic. No. 036954

"IN ACCORDANCE WITH ARTICLE 145, SECTION 7209 OF THE NYS EDUCATION LAW, ALTERATION OF THIS DOCUMENT EXCEPT BY A LICENSED PROFESSIONAL IS ILLEGAL."

DESIGNED BY:	DRAWN BY:	CHECKED BY:	REVIEWED BY:
DBS/RLG	ANK	DBS	POS

PROJECT No:	DATE:	SCALE:
TRFD 2302	FEBRUARY 2025	AS SHOWN

CLIENT

THIELLS ROSEVILLE FIRE DISTRICT

NEW 26-100 FIRE HEADQUARTERS

THIELLS 26 FD

65 W RAMAPO ROAD
GARNERVILLE, NY 10923

CONTRACT

CONTRACT G
GENERAL CONSTRUCTION

STATUS

FINAL BID DOCUMENT

SHEET TITLE

PLAN DETAILS

DRAWING No.

A 500.00

C:\Users\akaleo\Documents\TRFD2302_Central23-A_Akaleo.rvt

2/25/2025 4:09:24 PM

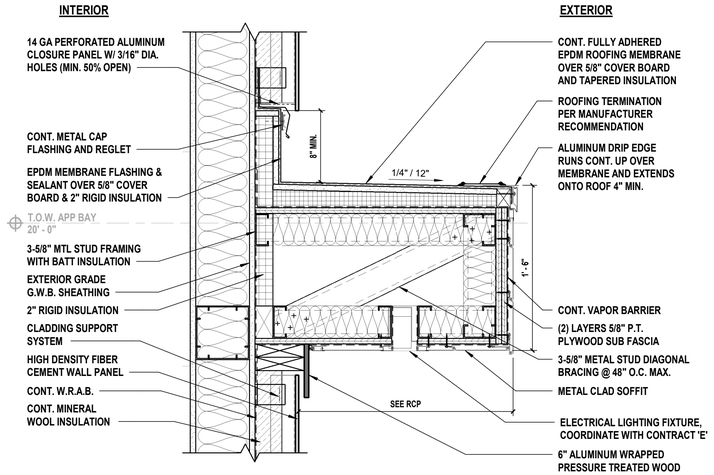

1 **Wall Detail @ Portal**
SCALE: 1 1/2" = 1'-0"

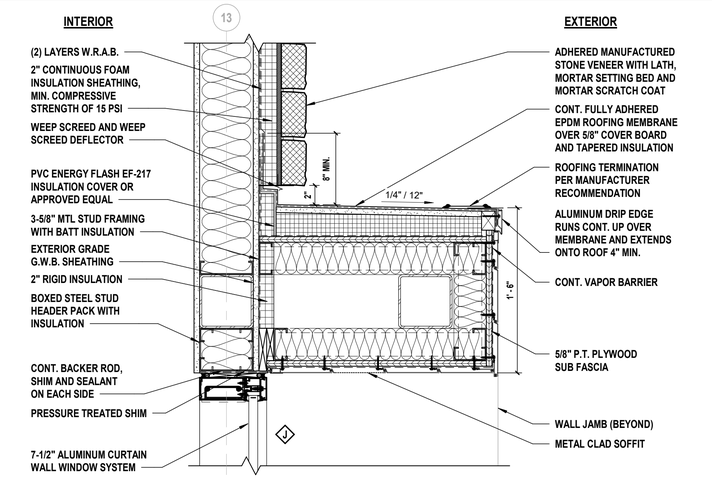

2 **Wall Detail @ Curtain Wall Below**
SCALE: 1 1/2" = 1'-0"

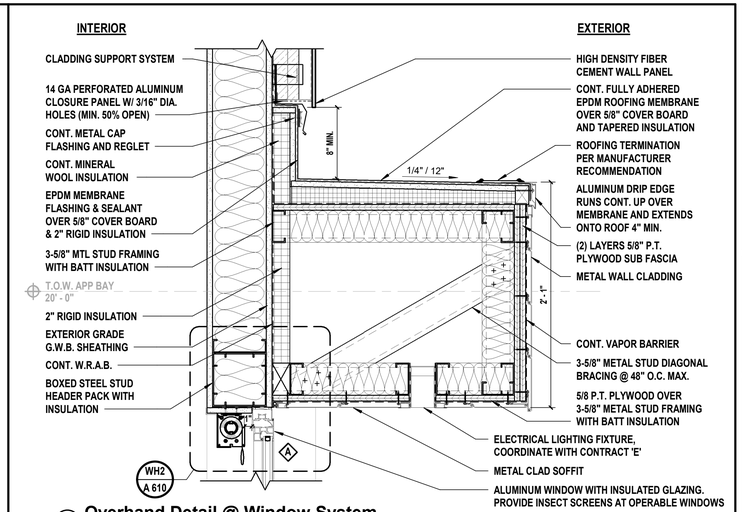

3 **Overhand Detail @ Window System**
SCALE: 1 1/2" = 1'-0"

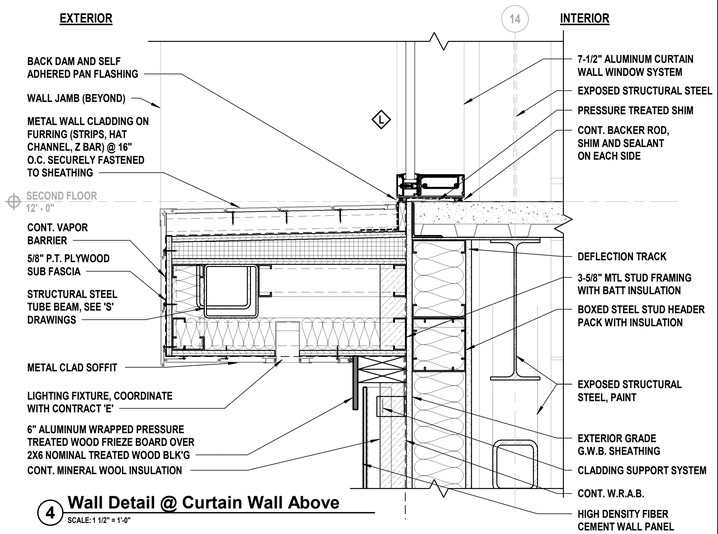

4 **Wall Detail @ Curtain Wall Above**
SCALE: 1 1/2" = 1'-0"

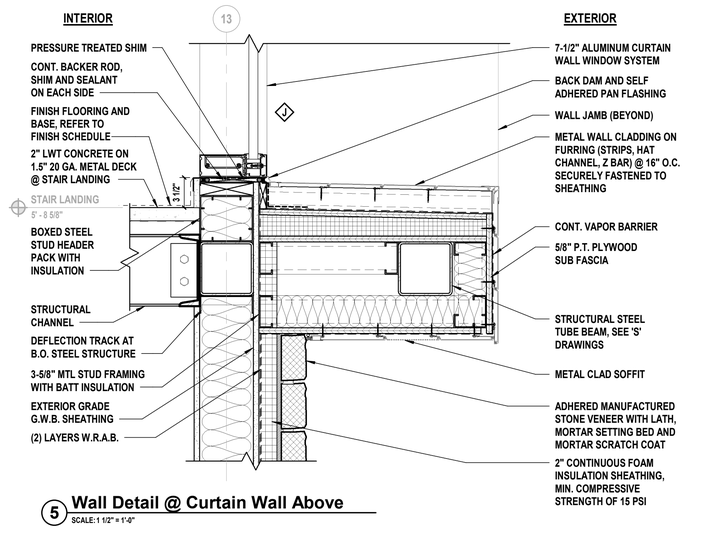

5 **Wall Detail @ Curtain Wall Above**
SCALE: 1 1/2" = 1'-0"

H2M architects + engineers
538 Broad Hollow Road, 4th Floor East
Melville, NY 11747
631.756.8000 • www.h2m.com
NY Architecture & Landscape Architecture: No Certificate Required
NY Engineering Certificate of Authorization No.: 0018178

CONSULTANTS:

MARK	DATE	DESCRIPTION

REGISTERED ARCHITECT PATRICK O. STONE STATE OF NEW YORK 036954

10/31/2025
Exp. Date

PATRICK O. STONE, R.A.
NY PROFESSIONAL ARCHITECT Lic. No. 036954

"IN ACCORDANCE WITH ARTICLE 145, SECTION 7209 OF THE NYS EDUCATION LAW, ALTERATION OF THIS DOCUMENT EXCEPT BY A LICENSED PROFESSIONAL IS ILLEGAL"

DESIGNED BY:	DRAWN BY:	CHECKED BY:	REVIEWED BY:
DBS/RLG	ANK	DBS	POS

PROJECT No:	DATE:	SCALE:
TRFD 2302	FEBRUARY 2025	AS SHOWN

CLIENT

THIELLS ROSEVILLE FIRE DISTRICT

NEW 26-100 FIRE HEADQUARTERS

65 W RAMAPO ROAD GARNERVILLE, NY 10923

CONTRACT

CONTRACT G GENERAL CONSTRUCTION

STATUS

FINAL BID DOCUMENT

SHEET TITLE

SECTION DETAILS

DRAWING No.

A 501.00

C:\Users\akiled\Documents\TRFD2302_Central25-A_AKiled.rvt

2/25/2025 4:09:28 PM

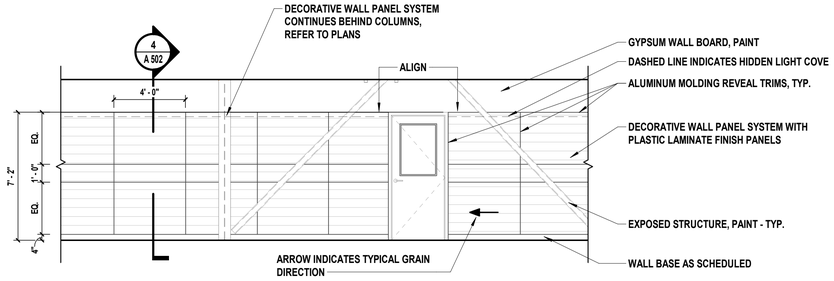

1 Typical Interior Wall Panel Layout

SCALE: 1/4" = 1'-0"

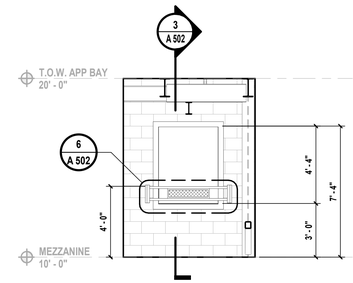

2 Interior Elevation - Bailout Window

SCALE: 1/4" = 1'-0"

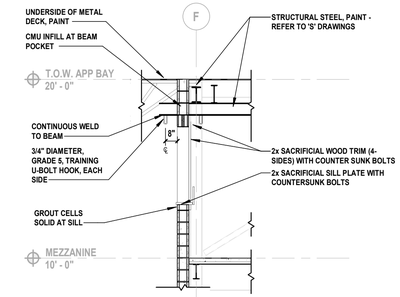

3 Bailout Window Section

SCALE: 1/4" = 1'-0"

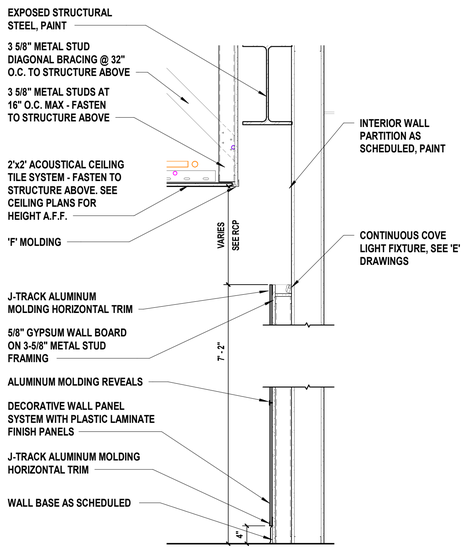

4 Interior Wall Panel and Light Cove Section

SCALE: 3/4" = 1'-0"

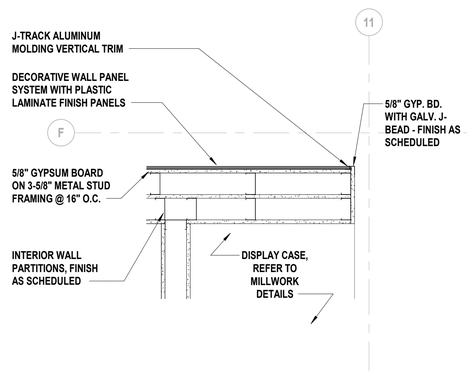

5 Interior Wall Panel Outside Corner

SCALE: 1" = 1'-0"

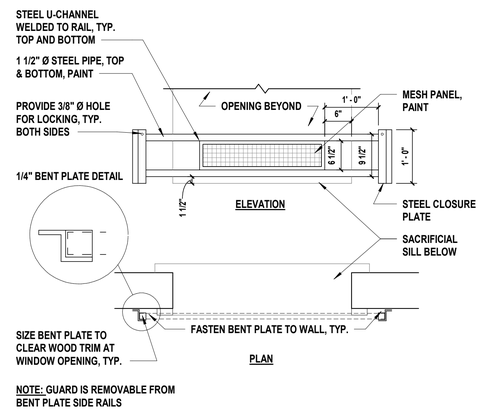

6 Opening Guard Detail

SCALE: 3/4" = 1'-0"

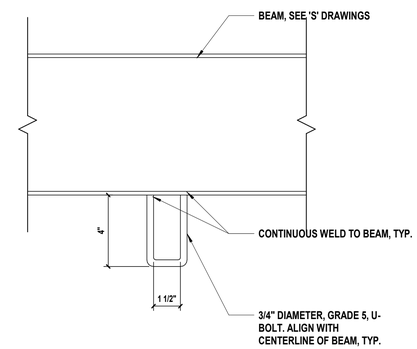

7 Training Window U-Bolt

SCALE: 3" = 1'-0"

H2M architects + engineers

538 Broad Hollow Road, 4th Floor East
Melville, NY 11747
631.756.8000 • www.h2m.com
NY Architecture & Landscape Architecture: No Certificate Required
NY Engineering Certificate of Authorization No.: 0018178

CONSULTANTS:

MARK	DATE	DESCRIPTION

REGISTERED ARCHITECT PATRICK O. STONE STATE OF NEW YORK 036954

10/31/2025
Exp. Date

PATRICK O. STONE, R.A.
NY PROFESSIONAL ARCHITECT Lic. No. 036954

"IN ACCORDANCE WITH ARTICLE 145, SECTION 7209 OF THE NYS EDUCATION LAW, ALTERATION OF THIS DOCUMENT EXCEPT BY A LICENSED PROFESSIONAL IS ILLEGAL."

DESIGNED BY:	DRAWN BY:	CHECKED BY:	REVIEWED BY:
DBS/RLG	ANK	DBS	POS
PROJECT No: TRFD 2302	DATE: FEBRUARY 2025		SCALE: AS SHOWN

CLIENT

THIELLS ROSEVILLE FIRE DISTRICT

NEW 26-100 FIRE HEADQUARTERS

65 W RAMAPO ROAD
GARNERVILLE, NY 10923

CONTRACT

CONTRACT G
GENERAL CONSTRUCTION

STATUS

FINAL BID DOCUMENT

SHEET TITLE

INTERIOR DETAILS

DRAWING No.

A 502.00

C:\Users\akaled\Documents\TRFD2302_Central23-A_AKaled.rvt

2/25/2025 4:09:32 PM

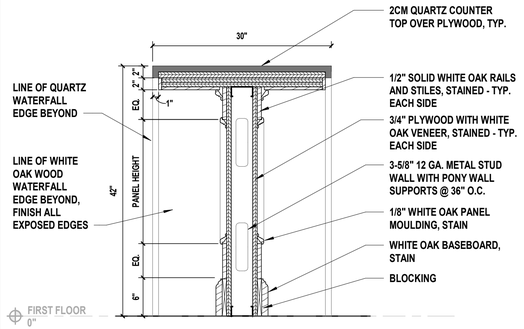

1 Day Room Island Section
SCALE: 1" = 1'-0"

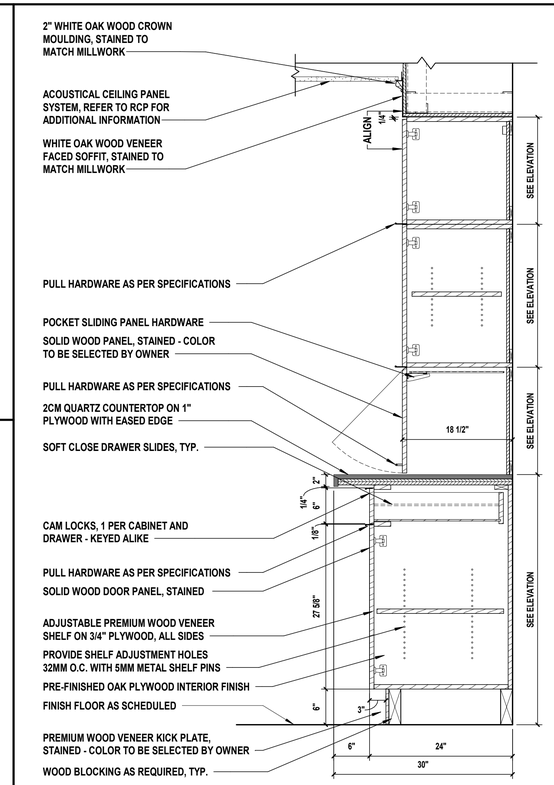

2 Cabinetry Section
SCALE: 1" = 1'-0"

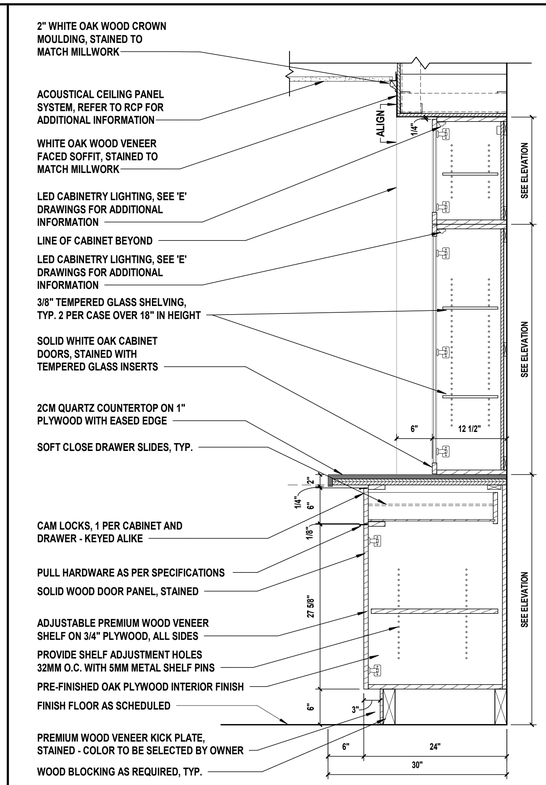

3 Cabinetry Section
SCALE: 1" = 1'-0"

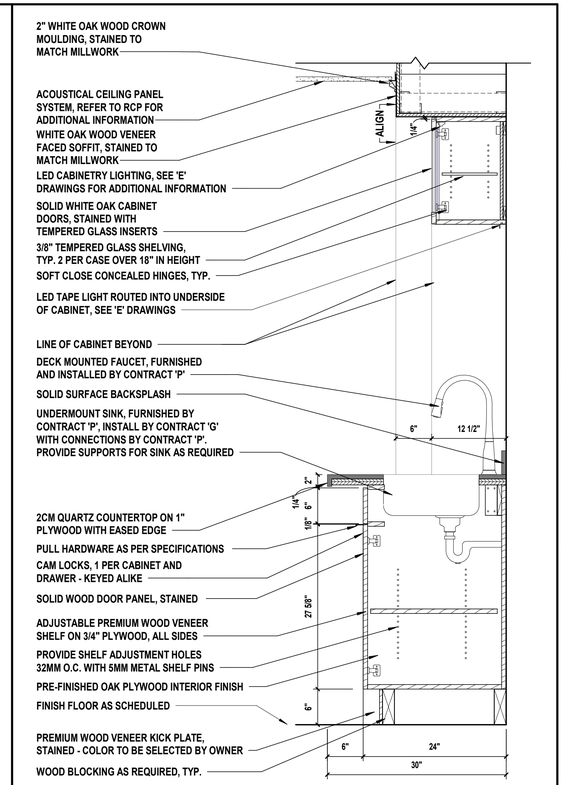

4 Cabinetry Section
SCALE: 1" = 1'-0"

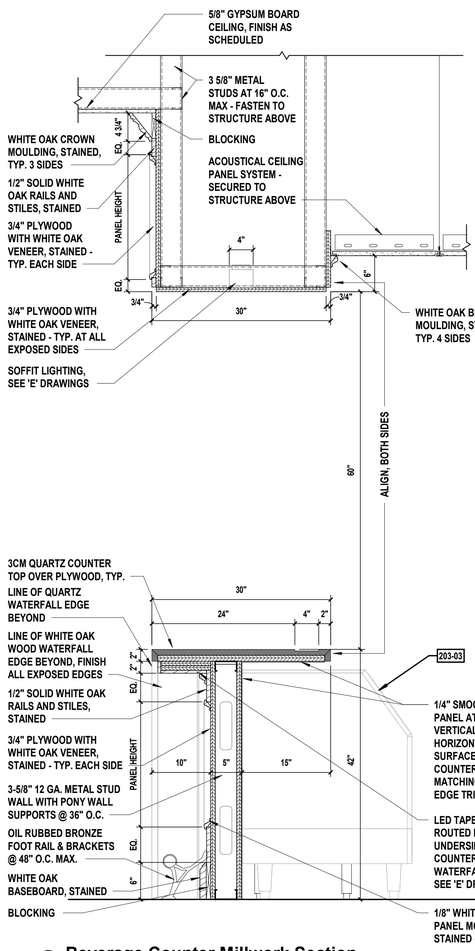

5 Beverage Counter Millwork Section
SCALE: 1" = 1'-0"

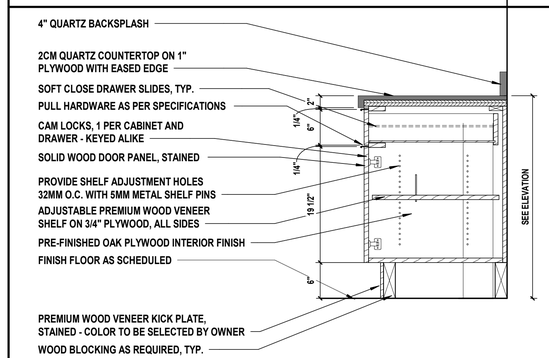

6 Cabinetry Section
SCALE: 1" = 1'-0"

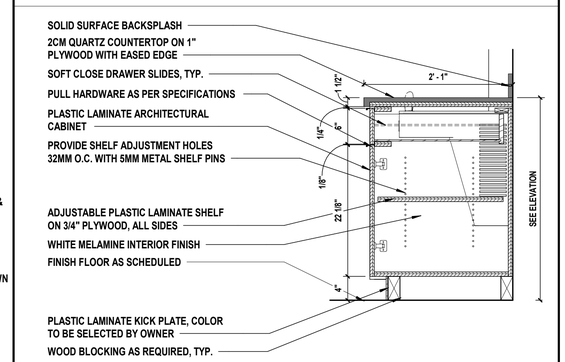

7 Plastic Laminate Cabinetry Section
SCALE: 1" = 1'-0"

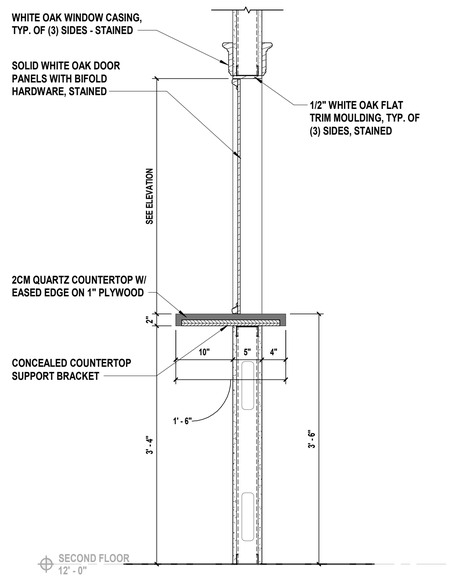

8 Pass Through Window Section
SCALE: 1" = 1'-0"

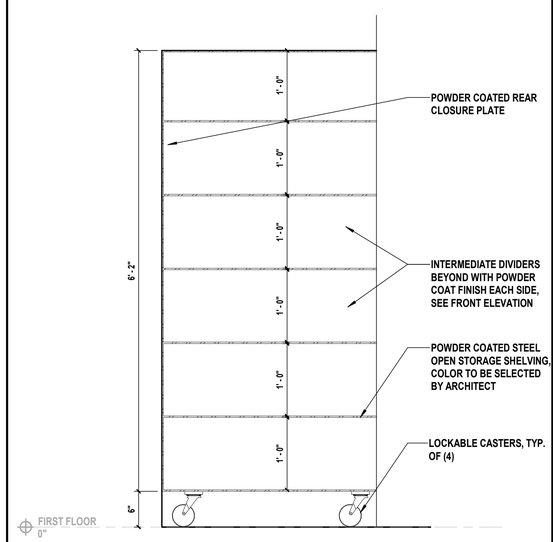

9 SCBA Steel Casework
SCALE: 1" = 1'-0"

H2M architects + engineers

538 Broad Hollow Road, 4th Floor East
Melville, NY 11747
631.756.8000 • www.h2m.com
NY Architecture & Landscape Architecture: No Certificate Required
NY Engineering Certificate of Authorization No.: 0018178

CONSULTANTS:

MARK	DATE	DESCRIPTION

REGISTERED ARCHITECT PATRICK OTTO STONE 039654 STATE OF NEW YORK

10/31/2025
Exp. Date

PATRICK O. STONE, R.A.
NY PROFESSIONAL ARCHITECT Lic. No. 039654

"IN ACCORDANCE WITH ARTICLE 145, SECTION 7209 OF THE NYS EDUCATION LAW, ALTERATION OF THIS DOCUMENT EXCEPT BY A LICENSED PROFESSIONAL IS ILLEGAL."

DESIGNED BY:	DRAWN BY:	CHECKED BY:	REVIEWED BY:
DBS/RLG	ANK	DBS	POS

PROJECT No:	DATE:	SCALE:
TRFD 2302	FEBRUARY 2025	AS SHOWN

CLIENT

THIELLS ROSEVILLE FIRE DISTRICT

NEW 26-100 FIRE HEADQUARTERS

THIELLS 26 FD

65 W RAMAPO ROAD
GARNERVILLE, NY 10923

CONTRACT

CONTRACT G
GENERAL CONSTRUCTION

STATUS

FINAL BID DOCUMENT

SHEET TITLE

MILLWORK DETAILS

DRAWING No.

A 503.00

C:\Users\akaled\Documents\TRFD2302_Central23-A_AKaled.rvt

2/25/2025 4:09:36 PM

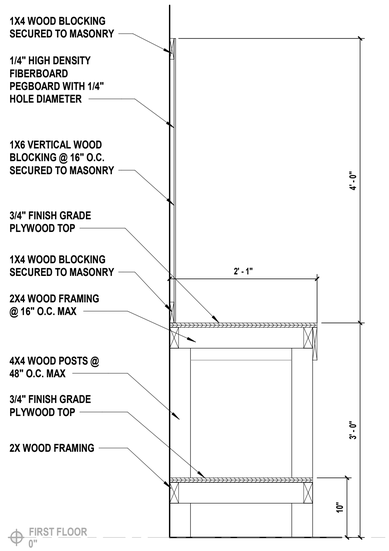

1 Workbench Detail

SCALE: 1" = 1'-0"

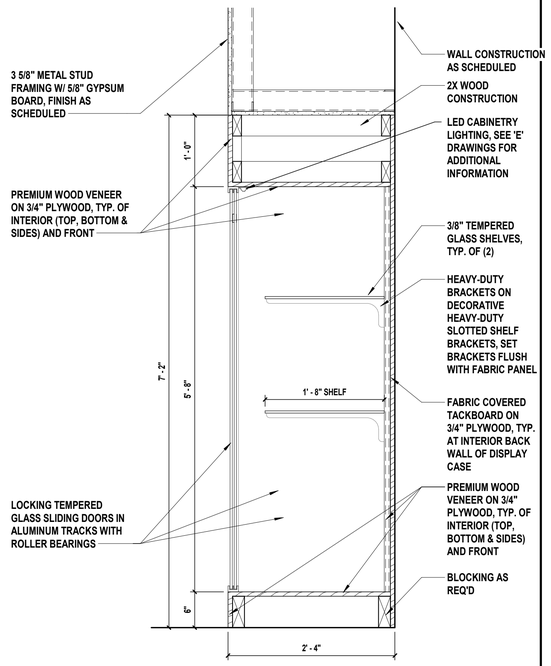

2 Display Case Section Detail

SCALE: 1" = 1'-0"

H2M architects + engineers

538 Broad Hollow Road, 4th Floor East
Melville, NY 11747
631.756.8000 • www.h2m.com
NY Architecture & Landscape Architecture: No Certificate Required
NY Engineering Certificate of Authorization No.: 0018178

CONSULTANTS:

MARK	DATE	DESCRIPTION

REGISTERED ARCHITECT PATRICK O. STONE 0396654 STATE OF NEW YORK

10/31/2025
Exp. Date

PATRICK O. STONE, R.A.
NY PROFESSIONAL ARCHITECT Lic. No. 036654

"IN ACCORDANCE WITH ARTICLE 145, SECTION 7209 OF THE NYS EDUCATION LAW, ALTERATION OF THIS DOCUMENT EXCEPT BY A LICENSED PROFESSIONAL IS ILLEGAL"

DESIGNED BY:	DRAWN BY:	CHECKED BY:	REVIEWED BY:
DBS/RLG	ANK/RLG	DBS	POS

PROJECT No:	DATE:	SCALE:
TRFD 2302	FEBRUARY 2025	AS SHOWN

CLIENT

THIELLS ROSEVILLE FIRE DISTRICT

NEW 26-100 FIRE HEADQUARTERS

THIELLS 26 FD

65 W RAMAPO ROAD
GARNERVILLE, NY 10923

CONTRACT

CONTRACT G
GENERAL CONSTRUCTION

STATUS

FINAL BID DOCUMENT

SHEET TITLE

MILLWORK DETAILS

DRAWING No.

A 504.00

C:\Users\akaled\Documents\TRFD2302_Central23-A_AKaled.rvt
2/25/2025 4:09:37 PM

FINISH SCHEDULE

FLOOR	ROOM NUMBER	ROOM NAME	FLOOR MATL.	FLOOR FIN.	FLOOR BASE	WALLS NORTH MATL.	WALLS NORTH FIN.	WALLS EAST MATL.	WALLS EAST FIN.	WALLS SOUTH MATL.	WALLS SOUTH FIN.	WALLS WEST MATL.	WALLS WEST FIN.	CEILING MATL.	CEILING FIN.	COMMENTS
STAIRS	'A'	STAIR	CONC	LVT	RUB	GWB	PT	GWB	PT	GWB	WC	GWB	PT	GWB	PT	WC ACCENT WALL AT INTERMEDIATE LANDING
STAIRS	'B'	STAIR	CONC	LVT	RUB	GWB	WC	GWB	PT	GWB	PT	GWB	PT	GWB	PT	WC ACCENT WALL AT INTERMEDIATE LANDING
STAIRS	'C'	STAIR	CONC	S.CONC	-	CMU	E.PT	CMU	E.PT	CMU	E.PT	CMU	E.PT	EXP.	PT	
FIRST FLOOR	100	CORRIDOR	CONC	LVT	RUB	GWB	PT	GWB/P.LAM	PT / FF	GWB /P.LAM	PT / FF	GWB	PT	ACP/GWB	ACP-2 / PT	
FIRST FLOOR	100A	VESTIBULE	CONC	LVT	RUB	GWB	PT	GWB	PT	GWB	PT	GWB	PT	ACP	ACP-2	
FIRST FLOOR	101	WOMEN'S TOILET	CONC	FT	WT	TBB	WT	TBB	WT	TBB	WT	TBB	WT	ACP	ACP-2	
FIRST FLOOR	101A	J.C.	CONC	FT	FT	MRGWB	PT/FRP	MRGWB	PT/FRP	MRGWB	PT/FRP	MRGWB	PT/FRP	ACP	ACP-3	
FIRST FLOOR	102	CHIEFS OFFICE	CONC	LVT	RUB	GWB	PT	GWB	PT	GWB	PT	GWB	PT	ACP	ACP-2	
FIRST FLOOR	102A	CHIEF'S STORAGE	CONC	LVT	RUB	GWB	PT	GWB	PT	GWB	PT	GWB	PT	ACP	ACP-2	
FIRST FLOOR	103	MEN'S TOILET	CONC	FT	WT	TBB	WT	TBB	WT	TBB	WT	MRGWB	WT	ACP	ACP-2	
FIRST FLOOR	104	CONFERENCE ROOM	CONC	CPT	RUB	GWB	PT	GWB	PT	GWB	PT	GWB	PT	ACP/GWB	ACP-2 / PT	PT ACCENT AT WEST WALL
FIRST FLOOR	105	FITNESS ROOM	CONC	RFT	RUB	GWB	PT	GWB	PT	GWB	PT	GWB	PT	ACP/EXP	ACP-2 / PT	SEE INTERIOR ELEVATIONS FOR MIRROR LOCATIONS
FIRST FLOOR	105A	SHOWER ROOM	CONC	FT	WT	TBB	WT	TBB	WT	TBB	WT	TBB	WT	ACP	ACP-3	
FIRST FLOOR	106	LINE OFFICERS	CONC	LVT	RUB	GWB	PT	GWB	PT	GWB	PT	GWB	PT	ACP	ACP-2	
FIRST FLOOR	107	DAY ROOM	CONC	LVT	RUB	GWB	PT	GWB	PT	GWB	PT	GWB	PT	ACP/GWB	ACP-2 / PT	
FIRST FLOOR	108	UNIFORM STORAGE	CONC	LVT	RUB	GWB	PT	GWB	PT	GWB	PT	GWB	PT	ACP	ACP-2	
FIRST FLOOR	109	WOMEN'S AUXILARY	CONC	LVT	RUB	GWB	PT	GWB	PT	GWB	PT	GWB	PT	ACP	ACP-2	
FIRST FLOOR	110	UTILITY ROOM	CONC	LVT	RUB	GWB	PT	GWB	PT	GWB	PT	GWB	PT	ACP	ACP-2	
FIRST FLOOR	111	DECON TRANSITION	CONC	EPOXY/WOM	EPOXY	CMU	E.PT	GWB	E. PT	GWB	E. PT	GWB	E. PT	EXP	PT	
FIRST FLOOR	112	GEAR AREA	CONC	EPOXY	EPOXY	CMU	E.PT	CMU	E.PT	CMU	E.PT	CMU	E.PT	EXP	PT	
FIRST FLOOR	113	DECON BATHROOM	CONC	EPOXY	EPOXY	CMU	E.PT	CMU	E.PT	CMU	E.PT	CMU	E.PT	ACP	ACP-3	
FIRST FLOOR	114	OUTDOOR STORAGE	CONC	EPOXY	EPOXY	CMU	E.PT	CMU	E.PT	CMU	E.PT	CMU	E.PT	EXP	PT	
FIRST FLOOR	115	LAUNDRY	CONC	EPOXY	EPOXY	CMU	E.PT	CMU	E.PT	CMU	E.PT	CMU	E.PT	EXP	PT	
FIRST FLOOR	116	FIRE GEAR STORAGE	CONC	EPOXY	EPOXY	CMU	E.PT	CMU	E.PT	CMU	E.PT	CMU	E.PT	EXP	PT	
FIRST FLOOR	117	WORK ROOM	CONC	EPOXY	EPOXY	CMU	E.PT	CMU	E.PT	CMU	E.PT	CMU	E.PT	EXP	PT	
FIRST FLOOR	118	DECON TRANSITION	CONC	EPOXY/WOM	EPOXY	CMU	E.PT	CMU	E.PT	CMU	E.PT	CMU	E.PT	ACP	ACP-3	
FIRST FLOOR	119	RADIO ROOM	CONC	LVT	RUB	HIGWB	PT	HIGWB	PT	HIGWB	PT	HIGWB	PT	ACP	ACP-3	
FIRST FLOOR	120	APPARATUS BAY	CONC	EPOXY	EPOXY	CMU	E.PT	CMU	E.PT	CMU	E.PT	CMU	E.PT	EXP	PT	
FIRST FLOOR	121	SCBA	CONC	EPOXY	EPOXY	CMU	E.PT	CMU	E.PT	CMU	E.PT	CMU	E.PT	EXP	PT	
FIRST FLOOR	122	DELIVERY	CONC	FT	FT	HIGWB	PT	HIGWB	PT	HIGWB	PT	HIGWB	PT	ACP	ACP-3	
MEZZANINE	M01	STORAGE	CONC	S.CONC	RUB	CMU	E.PT	CMU	E.PT	CMU	E.PT	CMU	E.PT	EXP	PT	
MEZZANINE	M02	UTILITY	CONC	S.CONC	RUB	GWB	PT	GWB	PT	CMU	E.PT	CMU	E.PT	EXP	PT	
MEZZANINE	M03	FILE STORAGE	CONC	S.CONC	RUB	GWB	PT	GWB	PT	CMU	E.PT	GWB	PT	EXP	PT	
MEZZANINE	M04	I.T.	CONC	S.CONC	RUB	GWB	PT	CMU	PT	CMU	E.PT	GWB	PT	EXP	PT	
SECOND FLOOR	200	CORRIDOR	CONC	LVT	RUB	GWB	PT	GWB	PT	GWB /P.LAM	PT / FF	GWB	PT	ACP	ACP-2	
SECOND FLOOR	201	KITCHEN	CONC	FT	QT	TBB	WT	TBB	WT	TBB	WT	TBB	WT	ACP	ACP-1	
SECOND FLOOR	201A	PANTRY	CONC	QT	FT	GWB	FRP	GWB	FRP	GWB	FRP	GWB	FRP	ACP	ACP-1	
SECOND FLOOR	202	COMMISSIONERS	CONC	CPT	RUB	GWB	PT	GWB	PT	GWB	PT	GWB	PT	ACP	ACP-2	
SECOND FLOOR	203	MULTI-PURPOSE ROOM	CONC	LVT	WD	GWB	WC	GWB	PT	GWB	WC/WT	GWB	PT	GWB/ABAF	PT/FF	PROVIDE LVT ACCENT BORDER AROUND ENTIRE ROOM
SECOND FLOOR	203A	MULTI-PURPOSE ROOM	CONC	LVT	WD	GWB	WC	GWB	PT	GWB	PT	GWB	PT	GWB/ABAF	PT/FF	PROVIDE LVT ACCENT BORDER AROUND ENTIRE ROOM
SECOND FLOOR	204	MULTI-PURPOSE STORAGE	CONC	LVT	RUB	GWB	PT	GWB	PT	GWB	PT	GWB	PT	ACP	ACP-2	
SECOND FLOOR	205	PURCHASING	CONC	CPT	RUB	GWB	PT	GWB	PT	GWB	PT	GWB	PT	ACP	ACP-2	
SECOND FLOOR	206	PRESIDENTS	CONC	CPT	RUB	GWB	PT	GWB	PT	GWB	PT	GWB	PT	ACP	ACP-2	
SECOND FLOOR	207	W. TOILET	CONC	FT	FT	TBB	WT	TBB	WT	TBB	WT	TBB	WT	ACP/GWB	ACP-2	
SECOND FLOOR	208	J.C.	CONC	FT	FT	MRGWB	FRP	GWB	FRP	TBB	WT	MRGWB	WT	ACP	ACP-3	
SECOND FLOOR	209	M. TOILET	CONC	FT	FT	TBB	WT	TBB	WT	TBB	WT	TBB	WT	ACP/GWB	ACP-2	

ABBREVIATIONS

A.BAF	= ACOUSTICAL BAFFLE	E.PT	= EPOXY PAINT	GWB	= GYPSUM WALL BOARD	RFT	= RUBBER FLOOR TILE	WC	= WALL COVERING
ACP	= ACOUSTICAL CEILING PANEL	EXP	= EXPOSED STRUCTURE	HIGWB	= HIGH IMPACT GYPSUM BOARD	S. CONC	= SEALED CONCRETE	WD	= WOOD
CONC	= CONCRETE	FF	= FACTORY FINISH	LVT	= LUXURY VINYL TILE	ST.CONC	= STAINED CONCRETE	WOM	= WALK OFF MAT
CPT	= CARPET	FRP	= FIBERGLASS REINFORCED PLASTIC	MRGWB	= MOISTURE RESISTANT GYPSUM WALL BOARD	TBB	= TILE BACKER BOARD	WT	= WALL TILE
CMU	= CONCRETE MASONRY UNIT	FT	= FLOOR TILE	PT	= PAINT	QT	= QUARRY TILE		
		EPOXY	= EPOXY	P.LAM	= PLASTIC LAMINATE WALL PANELS				

FINISH NOTES

1. ALL INTERIOR FINISHES ARE TO MEET OR EXCEED THE REQUIREMENTS OF NYSCRR PARTS 771 & 772.
2. SEE SPECIFICATIONS FOR INTERIOR FINISH MINIMUM REQUIREMENTS.
3. SEE REFLECTED CEILING PLAN FOR CEILING HEIGHTS, SOFFITS, AND SAC TYPES. REFER TO SPECIFICATIONS 095113 FOR ACOUSTICAL CEILING TYPES AND ADDITIONAL INFORMATION.
4. THIS SCHEDULE SERVES AS A GENERAL LIST OF FINISH ITEMS AND IS NOT A LIST OF ALL FINISH ITEMS WITHIN A ROOM OR SPACE. REFER TO ALL CONTRACT DOCUMENTS, DRAWINGS, AND SPECIFICATIONS TO DETERMINE ALL REQUIRED FINISHES AND FINISH ITEMS.
5. CONTRACTOR SHALL FIELD VERIFY ALL DIMENSIONS FOR QUANTITY TAKEOFFS AND FABRICATION OF MATERIALS.
6. CONTRACTOR IS REQUIRED TO FURNISH AND INSTALL ALL FINISHES AS INDICATED IN ACCORDANCE WITH MANUFACTURERS INSTRUCTIONS AND RECOMMENDATIONS.
7. ALL ROOMS SCHEDULED TO BE PAINTED SHALL BE PREPARED, PRIMED, AND PAINTED OR STAINED AS NOTED INCLUDING ALL WALL SURFACES, EXPOSED CEILINGS, MOULDING, DOOR FRAMES, DOOR TRIM, WINDOW TRIM, CLOSETS, ETC.
8. CONTRACTOR IS RESPONSIBLE TO INCLUDE IN BASE BID PRICING ALL SEALANTS, ADHESIVES AND MATERIALS REQUIRED TO PROPERLY COMPLETE THE INSTALLATION OF ALL FINISHES AS INDICATED.
9. ALL EXPOSED OUTSIDE CORNERS OF GWB ARE TO RECEIVE CORNER GUARDS UNLESS NOTED OR DIRECTED OTHERWISE BY THE ARCHITECT.
10. ALL EXPOSED FIRE SPRINKLER, DUCTWORK, CONDUIT, PIPING, ETC. SHALL BE PAINTED, COLOR TO BE DETERMINED BY ARCHITECT UNLESS NOTED OTHERWISE.
11. CONTRACTOR SHALL PROVIDE SHOP DRAWINGS FOR ARCHITECT'S REVIEW AND APPROVAL PRIOR TO INSTALLATION OF FINISH FLOOR MATERIALS.
12. IN ALL ROOMS WITH TILE FLOORS AND FLOOR DRAINS, FINISH SHALL BE LOCALLY SLOPED TO DRAIN. NO RECESS IN SLAB.
13. ELEVATOR CAB SHALL RECEIVE LVT FLOORING CONSISTENT WITH CORRIDOR FINISHES

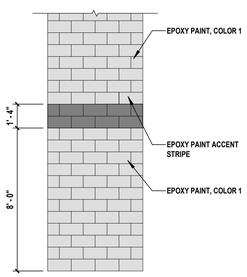

1 Apparatus Wall Paint Detail
SCALE: 1/4" = 1'-0"

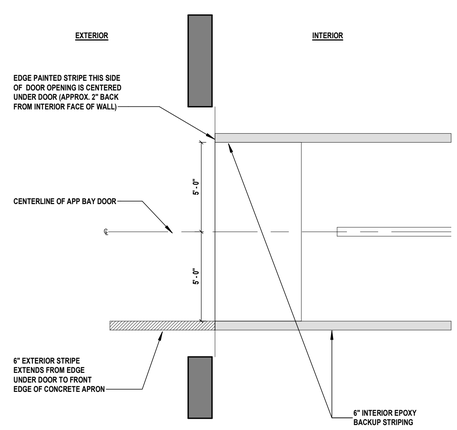

2 Apparatus Striping Detail
SCALE: 1/4" = 1'-0"

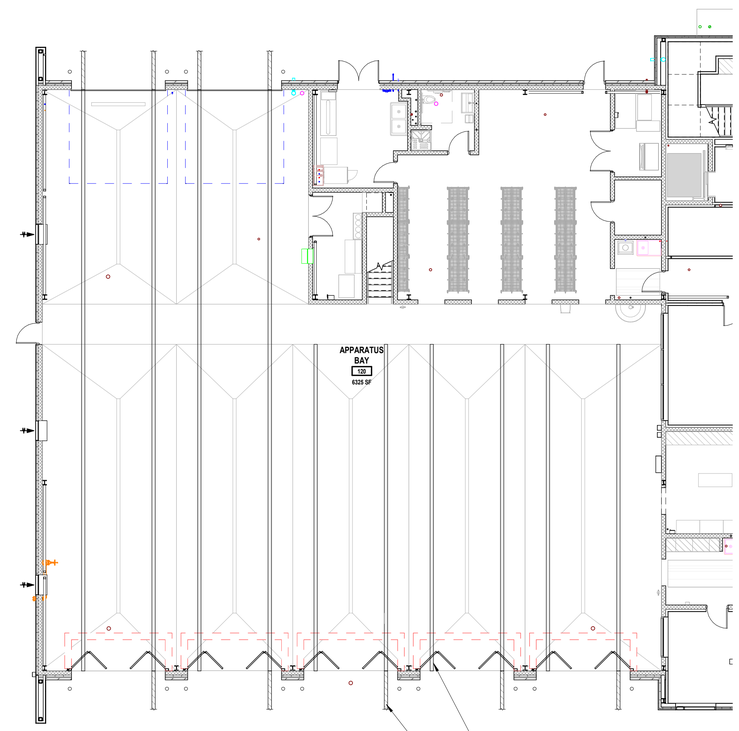

3 Apparatus Bay Striping Plan
SCALE: 3/32" = 1'-0"

H2M architects + engineers
538 Broad Hollow Road, 4th Floor East
Melville, NY 11747
631.756.8000 • www.h2m.com
NY Architecture & Landscape Architecture: No Certificate Required
NY Engineering Certificate of Authorization No.: 0018178

CONSULTANTS:

MARK	DATE	DESCRIPTION

REGISTERED ARCHITECT PATRICK O. STONE STATE OF NEW YORK 0396654

10/31/2025
Exp. Date

PATRICK O. STONE, R.A.
NY PROFESSIONAL ARCHITECT Lic. No. 036654

"IN ACCORDANCE WITH ARTICLE 145, SECTION 7209 OF THE NYS EDUCATION LAW, ALTERATION OF THIS DOCUMENT EXCEPT BY A LICENSED PROFESSIONAL IS ILLEGAL."

DESIGNED BY:	DRAWN BY:	CHECKED BY:	REVIEWED BY:
DBS/RLG	ANK/RLG	DBS	POS

PROJECT No:	DATE:	SCALE:
TRFD 2302	FEBRUARY 2025	AS SHOWN

CLIENT

THIELLS ROSEVILLE FIRE DISTRICT

NEW 26-100 FIRE HEADQUARTERS

65 W RAMAPO ROAD
GARNERVILLE, NY 10923

CONTRACT

CONTRACT G
GENERAL CONSTRUCTION

STATUS

FINAL BID DOCUMENT

SHEET TITLE

FINISH SCHEDULE

DRAWING No.

A 600.00

C:\Users\akiled\Documents\TRFD2302_Central23-A_AKiled.rvt

2/25/2025 4:09:47 PM

10"

DAVID B. ROCHE VOLUNTEER FIRE COMPANY

1 Building Mounted Signage

SCALE: 1/2" = 1'-0"

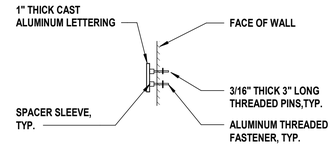

SECTION

1'- 6"

THIELLS ROSEVILLE FIRE DISTRICT

2 Halo Lit Letters Building Mounted Signage (Alternate G-05)

SCALE: 1/2" = 1'-0"

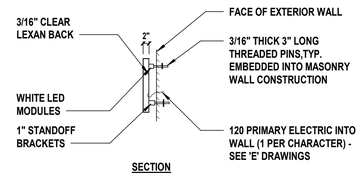

SECTION

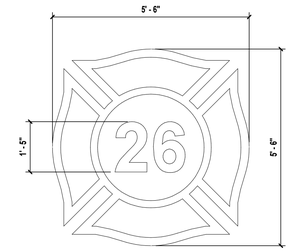

ELEVATION

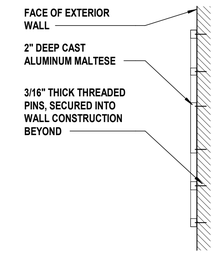

SECTION

3 Cast Aluminum Maltese

SCALE: 1/2" = 1'-0"

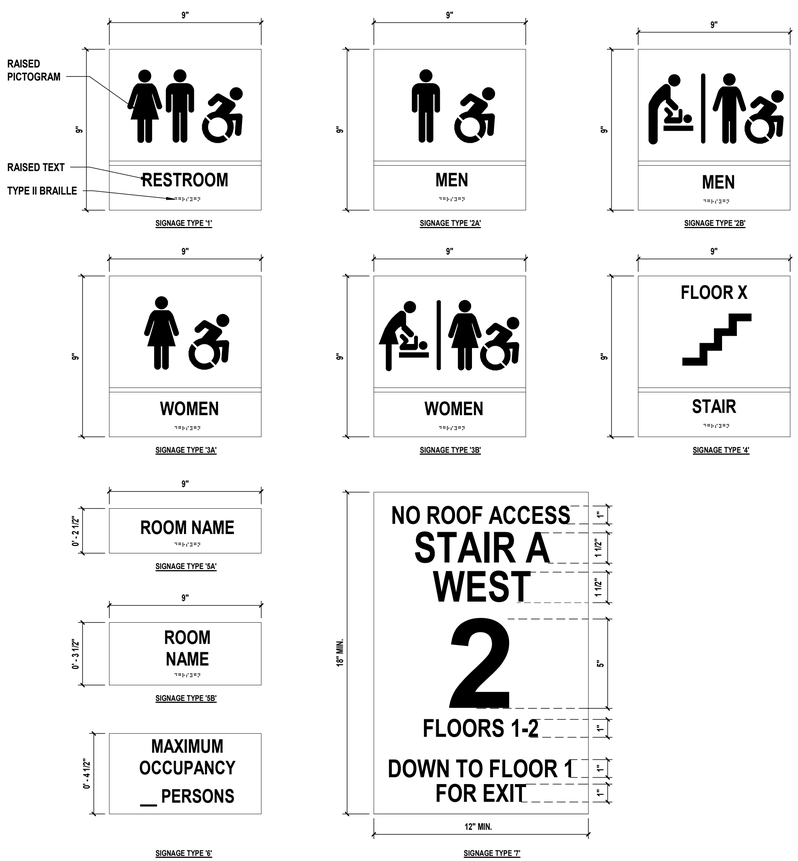

NOTES:
1. SIGNAGE TO BE ADA COMPLIANT.
2. EXIT SIGNAGE COMPLIANCE WITH THE 2020BCNYS.
3. ALL COLORS AND FINISHES TO BE SELECTED BY ARCHITECT/OWNER
4. ROOM NUMBERS TO BE CONFIRMED WITH OWNER PRIOR TO FABRICATION OF MATERIALS.
5. ALL SIGNAGE TO BE MOUNTED AS PER MANUFACTURERS RECOMMENDED INSTALLATION.
6. MOUNTING LOCATION AND HEIGHTS SHALL BE ADA COMPLIANT. LOCATIONS TO BE CONFIRMED WITH ARCHITECT PRIOR TO INSTALLATION.
7. REFER TO DOOR SCHEDULE FOR ROOMS TO RECEIVE ROOM SIGNAGE.
8. ENCLOSED STAIRS SHALL RECEIVE SIGNAGE TYPE '6' WITHIN THE ENCLOSURE AT EACH FLOOR LANDING.

4 Interior Signage

SCALE: 3" = 1'-0"

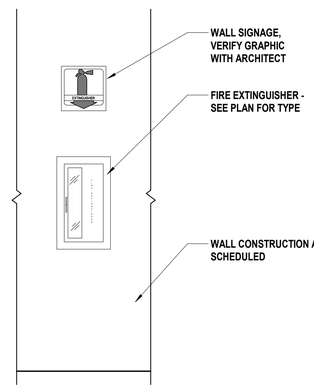

NOTES:
1. REFER TO CODE COMPLIANCE PLANS FOR LOCATIONS
2. PROVIDE AND INSTALL FIRE EXTINGUISHERS IN ACCORDANCE WITH ACCESSIBILITY GUIDELINES.

5 Fire Extinguisher Signage

SCALE: 3/4" = 1'-0"

3' - 0"

2' - 0"

THIELLS-ROSEVILLE FIRE DISTRICT
DAVID B. ROCHE VOLUNTEER FIRE COMPANY
26-100 STATION
2027

BOARD OF FIRE COMMISSIONERS
[INSERT NAME HERE]
[INSERT NAME HERE]
[INSERT NAME HERE]
[INSERT NAME HERE]
[INSERT NAME HERE]

CHIEF OF DEPARTMENT
[INSERT NAME HERE]

ARCHITECT/ENGINEER
H2M ARCHITECTS + ENGINEERS

CONSTRUCTION MANAGER
[INSERT NAME HERE]

NOTES:
1. FINAL VISUAL, VERBIAGE, NAMES AND TEXT TO BE REVIEWED BY OWNER AND ARCHITECT DURING SHOP DRAWING PROCESS. DISPLAYED INFORMATION IS FOR REFERENCE ONLY.
2. CONFIRM FINAL LOCATION WITH OWNER PRIOR TO INSTALLATION.

6 Dedication Plaque

SCALE: 3" = 1'-0"

TRUSS IDENTIFICATION SIGNAGE, LOCATE ON ALL EMERGENCY EGRESS DOOR LOCATIONS, TYP. OF 7 LOCATIONS

NOTES:
1. TOP OF SIGNAGE TO BE 42" MIN. AND 60" MAX. ABOVE FINISH FLOOR.
2. LOCATE SIGNAGE 12" O.C MAX. FROM LATCH SIDE OF DOOR.
3. SIGNAGE SHALL BE VISIBLE TO EXTERIOR OF BUILDING.
4. FINAL LOCATIONS TO BE DETERMINED WITH ARCHITECT.

7 Truss Identification Signage

SCALE: 3" = 1'-0"

SIGNAGE NOTES

1. DETAILS ON THIS SHEET SHALL BE COORDINATED WITH REQUIREMENTS OUTLINED IN SPECIFICATION 101400 OF THE PROJECT MANUAL.
2. REFER TO PROJECT MANUAL FOR LOCATIONS OF ALL SIGNAGE, TYPICAL.
3. MOUNTING LOCATIONS AND PLACEMENTS OF ALL SIGNS SHALL BE CONFIRMED WITH OWNER AND ARCHITECT PRIOR TO INSTALLATION.
4. FOR ALL EXTERIOR SIGNAGE LOCATED ON EXTERIOR OF BUILDING, SEE EXTERIOR ELEVATIONS FOR ADDITIONAL INFORMATION.
5. FINAL DESIGNS, ORIENTATION AND SPACING TO BE DETERMINED IN FIELD WITH OWNER AND ARCHITECT PRIOR TO INSTALLATION.
6. PROVIDE 3/4" CDX PLYWOOD BLOCKING AT ALL AREAS TO RECEIVE SIGNAGE.

H2M architects + engineers
538 Broad Hollow Road, 4th Floor East
Melville, NY 11747
631.756.8000 • www.h2m.com
NY Architecture & Landscape Architecture: No Certificate Required
NY Engineering Certificate of Authorization No.: 0018178

CONSULTANTS:

MARK	DATE	DESCRIPTION

REGISTERED ARCHITECT PATRICK O. STONE 0396654 STATE OF NEW YORK

10/31/2025
Exp. Date

PATRICK O. STONE, R.A.
NY PROFESSIONAL ARCHITECT Lic. No. 036654

"IN ACCORDANCE WITH ARTICLE 145, SECTION 7209 OF THE NYS EDUCATION LAW, ALTERATION OF THIS DOCUMENT EXCEPT BY A LICENSED PROFESSIONAL IS ILLEGAL."

DESIGNED BY:	DRAWN BY:	CHECKED BY:	REVIEWED BY:
RLG	RLG	DBS	POS

PROJECT No:	DATE:	SCALE:
TRFD 2302	FEBRUARY 2025	AS SHOWN

CLIENT

THIELLS ROSEVILLE FIRE DISTRICT

NEW 26-100 FIRE HEADQUARTERS

THIELLS 26 FD

65 W RAMAPO ROAD
GARNERVILLE, NY 10923

CONTRACT

CONTRACT G
GENERAL CONSTRUCTION

STATUS

FINAL BID DOCUMENT

SHEET TITLE

BUILDING SIGNAGE DETAILS

DRAWING No.

A 601.00

C:\Users\alukel\Documents\TRFD2302_Central23-A_AKalled.rvt

2/25/2025 4:09:49 PM

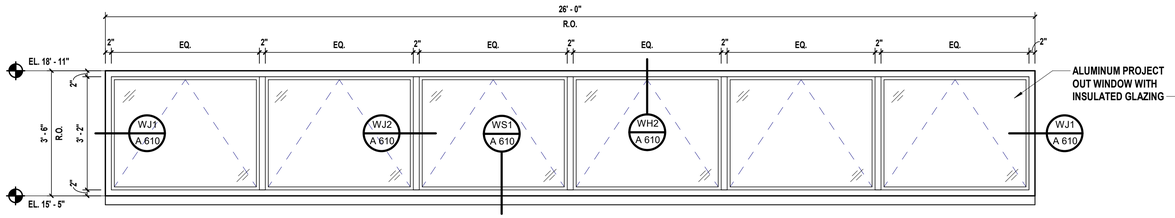

A Window Type A
SCALE: 1/2" = 1'-0"

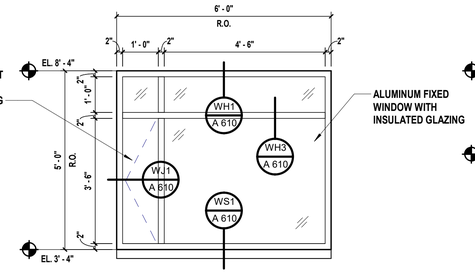

B Window Type B
SCALE: 1/2" = 1'-0"

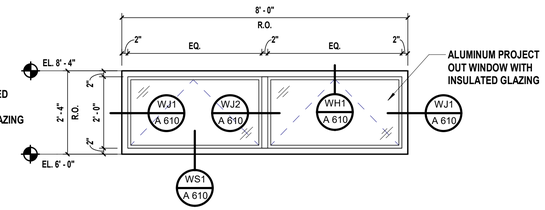

C Window Type C
SCALE: 1/2" = 1'-0"

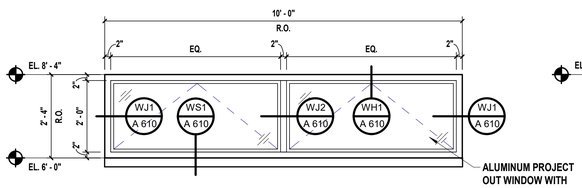

D Window Type D
SCALE: 1/2" = 1'-0"

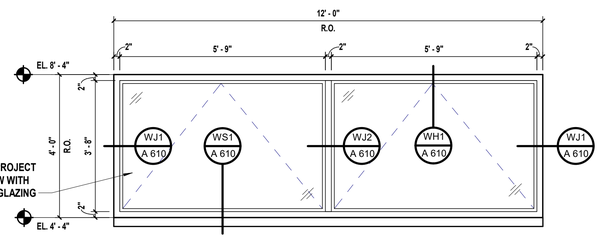

E Window Type E
SCALE: 1/2" = 1'-0"

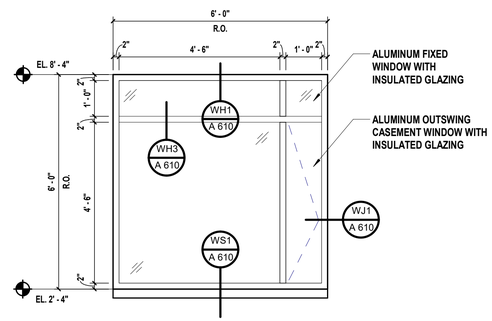

F Window Type F
SCALE: 1/2" = 1'-0"

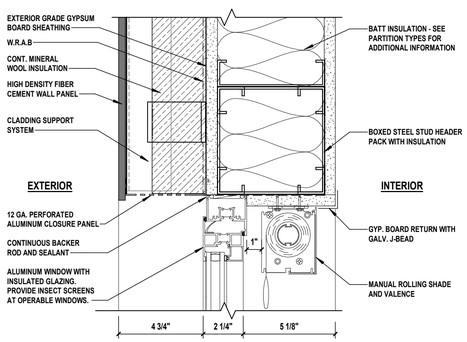

WH1 Window Head Detail
SCALE: 3" = 1'-0"

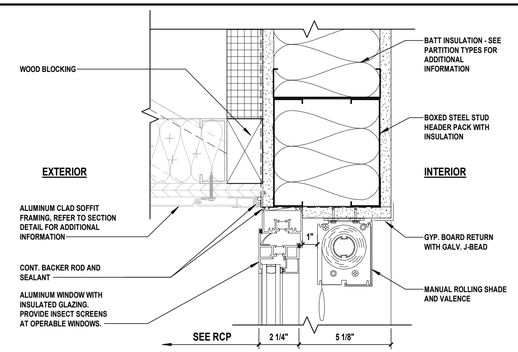

WH2 Window Head Detail
SCALE: 3" = 1'-0"

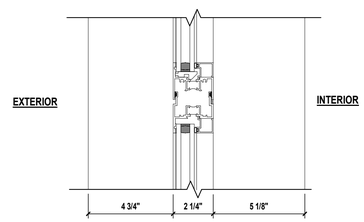

WH3 Fixed Stack Horizontal Detail
SCALE: 3" = 1'-0"

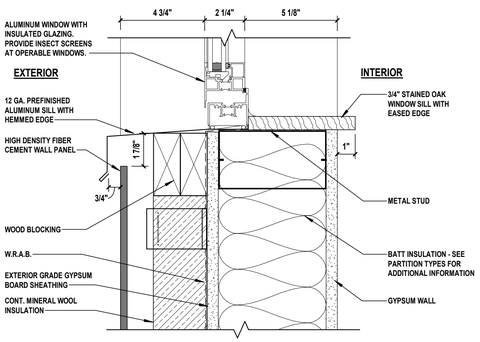

WS1 Window Sill Detail
SCALE: 3" = 1'-0"

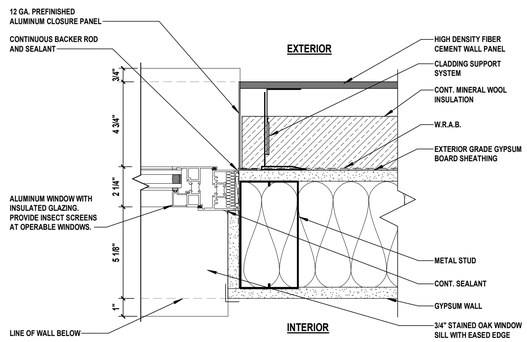

WJ1 Window Jamb Detail
SCALE: 3" = 1'-0"

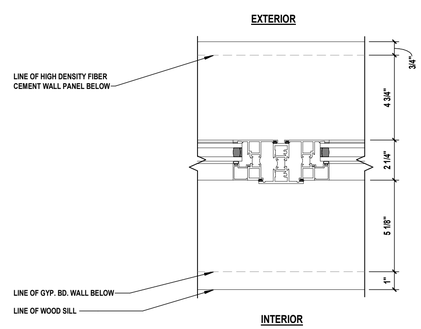

WJ2 Window Stiles Detail
SCALE: 3" = 1'-0"

H 2 M architects + engineers

538 Broad Hollow Road, 4th Floor East
Melville, NY 11747
631.756.8000 • www.h2m.com
NY Architecture & Landscape Architecture: No Certificate Required
NY Engineering Certificate of Authorization No.: 0018178

CONSULTANTS:

MARK	DATE	DESCRIPTION

REGISTERED ARCHITECT PATRICK O. STONE STATE OF NEW YORK 039654

10/31/2025
Exp. Date

PATRICK O. STONE, R.A.
NY PROFESSIONAL ARCHITECT Lic. No. 039654

"IN ACCORDANCE WITH ARTICLE 145, SECTION 7209 OF THE NYS EDUCATION LAW, ALTERATION OF THIS DOCUMENT EXCEPT BY A LICENSED PROFESSIONAL IS ILLEGAL."

DESIGNED BY:	DRAWN BY:	CHECKED BY:	REVIEWED BY:
DBS/RLG	KAP	DBS	POS
PROJECT No: TRFD 2302	DATE: FEBRUARY 2025	SCALE: AS SHOWN	

CLIENT

THIELLS ROSEVILLE FIRE DISTRICT

NEW 26-100 FIRE HEADQUARTERS

65 W RAMAPO ROAD
GARNERVILLE, NY 10923

CONTRACT

CONTRACT G
GENERAL CONSTRUCTION

STATUS

FINAL BID DOCUMENT

SHEET TITLE

WINDOW TYPES & DETAILS

DRAWING No.

A 610.00

C:\Users\akaled\Documents\TRFD2302_Central23-A_AKaled.rvt

2/25/2025 4:09:52 PM

DOOR SCHEDULE

FLOOR	DOOR NO.	FROM ROOM NAME	FROM ROOM NUMBER	TO ROOM NAME	TO ROOM NUMBER	DOOR SIZE WIDTH x HEIGHT	DOOR TYPE	DOOR MATERIAL	DOOR FINISH	FRAME TYPE	FRAME MATERIAL	FRAME FINISH	DETAILS HEAD	DETAILS JAMB	DETAILS SADDLE	FIRE RATING	HARDWARE SET	DOOR SIGNAGE	COMMENTS
FIRST FLOOR	100A	STAIR	'A'	EXTERIOR	-	(2) 36" x 84"	04	ALUM/GLASS	FF	BY MANU.	AL	FF	SEE A 630	SEE A 630	SEE A 630		1		
	100B	STAIR	'B'	EXTERIOR	-	(2) 36" x 84"	04	ALUM/GLASS	FF	BY MANU.	AL	FF	SEE A 630	SEE A 630	SEE A 630		1		
	100C	VESTIBULE	100A	EXTERIOR	-	36" x 84"	05	ALUM/GLASS	FF	F1	AL	FF	DH5	DJ5	DS3		2		
	100D	CORRIDOR	100	STAIR	'A'	36" x 84"	02	WD	FF	F1	HM	PT	DH7	DJ7	DS1	45 MIN.	19	•	
	100E	CORRIDOR	100	VESTIBULE	100A	36" x 84"	07	WD	FF	F1	HM	PT	DH7	DJ7	DS1		18		
	100F	CORRIDOR	100	STAIR	'B'	36" x 84"	02	WD	FF	F1	HM	PT	DH7	DJ7	DS1	45 MIN.	19	•	
	101	CORRIDOR	100	WOMEN'S TOILET	101	36" x 84"	01	WD	FF	F1	HM	PT	DH7	DJ7	DS2		16	•	
	101A	J.C.	101A	CORRIDOR	100	36" x 84"	09	WD	FF	F1	HM	PT	DH7	DJ7	DS2		6	•	
	102	CORRIDOR	100	CHIEFS OFFICE	102	36" x 84"	07	WD	FF	F1	HM	PT	DH7	DJ7	DS4		11		
	102A	CHIEF'S STORAGE	102A	CHIEFS OFFICE	102	36" x 84"	01	WD	FF	F1	HM	PT	DH7	DJ7	DS1		17		
	103	CORRIDOR	100	MEN'S TOILET	103	36" x 84"	01	WD	FF	F1	HM	PT	DH7	DJ7	DS2		16	•	
	104	CORRIDOR	100	CONFERENCE ROOM	104	36" x 84"	01	WD	FF	F1	HM	PT	DH7	DJ7	DS4		5	•	
	104A	CORRIDOR	100	CONFERENCE ROOM	104	36" x 84"	01	WD	FF	F1	HM	PT	DH7	DJ7	DS4		5	•	
	105	CORRIDOR	100	FITNESS ROOM	105	36" x 84"	05	ALUM/GLASS	FF	SEE A 640	AL	FF	SEE A 640	SEE A 640	DS4		13	•	
	105A	FITNESS ROOM	105	SHOWER ROOM	105A	36" x 84"	01	WD	FF	F1	HM	PT	DH7	DJ7	DS2		15	•	
	105B	FITNESS ROOM	105	EXTERIOR	-	(2) 36" x 84"	04	ALUM/GLASS	FF	SEE A 640	AL	FF	SEE A 640	SEE A 640	DS3		1		
	106	CORRIDOR	100	LINE OFFICERS	106	36" x 84"	07	WD	FF	F1	HM	PT	DH7	DJ7	DS4		11	•	
	107	CORRIDOR	100	DAY ROOM	107	36" x 84"	07	WD	FF	F1	HM	PT	DH7	DJ7	DS7		6	•	
	107A	DAY ROOM	107	EXTERIOR	-	36" x 84"	05	ALUM/GLASS	FF	SEE A 640	AL	FF	SEE A 640	SEE A 640	DS3		2		
	108	CORRIDOR	100	UNIFORM STORAGE	108	36" x 84"	01	WD	FF	F1	HM	PT	DH7	DJ7	DS7		6	•	
	109	CORRIDOR	100	WOMEN'S AUXILARY	109	36" x 84"	01	WD	FF	F1	HM	PT	DH7	DJ7	DS7		11	•	
	110	UTILITY ROOM	110	STAIR	'B'	36" x 84"	01	WD	FF	F1	HM	PT	DH7	DJ7	DS7	45 MIN.	19	•	
	111	CORRIDOR	100	DECON TRANSITION	111	36" x 84"	07	HM	PT	F2	HM	PT	DH3	DJ3	DS5		20	•	
	111A	GEAR AREA	112	DECON TRANSITION	111	48" x 88"	-	-	-	-	-	-	DH8	DJ8	-		-		MASONRY OPENING
	112A	GEAR AREA	112	EXTERIOR	-	36" x 84"	02	HM	PT	F2	HM	PT	DH1	DJ1	DS3		3		
	112B	GEAR AREA	112	APPARATUS BAY	120	48" x 88"	-	-	-	-	-	-	DH8	DJ8	-		-		MASONRY OPENING
	112C	GEAR AREA	112	APPARATUS BAY	120	48" x 88"	-	-	-	-	-	-	DH8	DJ8	-		-	•	MASONRY OPENING
	112D	GEAR AREA	112	APPARATUS BAY	120	48" x 88"	-	-	-	-	-	-	DH8	DJ8	-		-		MASONRY OPENING
	112E	GEAR AREA	112	APPARATUS BAY	120	48" x 88"	-	-	-	-	-	-	DH8	DJ8	-		-	•	MASONRY OPENING
	112F	APPARATUS BAY	120	STAIR	'C'	48" x 88"	-	-	-	-	-	-	(SIM.) DH8	(SIM.) DJ8	-		-	•	MASONRY OPENING
	113	DECON BATHROOM	113	GEAR AREA	112	36" x 84"	01	HM	PT	F2	HM	PT	DH4	DJ4	DS1		15	•	
	114	GEAR AREA	112	OUTDOOR STORAGE	114	(2) 36" x 84"	10	HM	PT	F2	HM	PT	DH4	DJ4	DS1		8	•	
	115	GEAR AREA	112	LAUNDRY	115	36" x 84"	02	HM	PT	F2	HM	PT	DH4	DJ4	DS1		6	•	
	115A	LAUNDRY	115	EXTERIOR	-	(2) 36" x 84"	03	HM	PT	F2	HM	PT	DH1	DJ1	DS3		23		
	116	FIRE GEAR STORAGE	116	GEAR AREA	112	36" x 84"	01	HM	PT	F2	HM	PT	DH4	DJ4	DS1		6	•	
	117A	APPARATUS BAY	120	WORK ROOM	117	48" x 88"	-	-	--	-	-	-	DH8	DJ8	-		-	•	MASONRY OPENING
	118	APPARATUS BAY	120	DECON TRANSITION	118	48" x 88"	-	-	-	-	-	-	DH8	DJ8	-		-		MASONRY OPENING
	118A	DECON TRANSITION	118	CORRIDOR	100	36" x 84"	07	HM	PT	F2	HM	PT	DH3	DJ3	DS5		20	•	
	119	DECON TRANSITION	118	RADIO ROOM	119	36" x 84"	07	HM	PT	F2	HM	PT	DH3	DJ3	DS5		12	•	
	120	APPARATUS BAY	120	EXTERIOR	-	36" x 84"	02	HM	PT	F2	HM	PT	DH2	DH2	DS3		3		
	121	APPARATUS BAY	120	SCBA	121	(2) 36" x 84"	03	HM	PT	F2	HM	PT	DH4	DJ4	DS1		8	•	
	122	DELIVERY	122	EXTERIOR	-	36" x 84"	01	HM	PT	F1	HM	PT	DH5	DJ5	DS3		4		
	122A	CORRIDOR	100	DELIVERY	122	36" x 84"	01	WD	FF	F1	HM	PT	DH7	DJ7	DS5		25	•	
	OH-1	APPARATUS BAY	120	EXTERIOR	-	168" x 168"	11	ALUM/GLASS	FF	BY MANU.	AL	FF	2 / A 623	5 / A 623	8 / A 623		-		ADD ALTERNATE G-01
	OH-2	APPARATUS BAY	120	EXTERIOR	-	168" x 168"	11	ALUM/GLASS	FF	BY MANU.	AL	FF	2 / A 623	5 / A 623	8 / A 623		-		ADD ALTERNATE G-01
	OH-3	APPARATUS BAY	120	EXTERIOR	-	168" x 168"	11	ALUM/GLASS	FF	BY MANU.	AL	FF	2 / A 623	5 / A 623	8 / A 623		-		ADD ALTERNATE G-01
	OH-4	APPARATUS BAY	120	EXTERIOR	-	168" x 168"	11	ALUM/GLASS	FF	BY MANU.	AL	FF	2 / A 623	5 / A 623	8 / A 623		-		ADD ALTERNATE G-01
	OH-5	APPARATUS BAY	120	EXTERIOR	-	168" x 168"	11	ALUM/GLASS	FF	BY MANU.	AL	FF	2 / A 623	5 / A 623	8 / A 623		-		ADD ALTERNATE G-01
	OH-6	APPARATUS BAY	120	EXTERIOR	-	168" x 168"	12	ALUM/GLASS	FF	BY MANU.	AL	FF	1 / A 623	4 / A 623	7 / A 623		-		
	OH-7	APPARATUS BAY	120	EXTERIOR	-	168" x 168"	12	ALUM/GLASS	FF	BY MANU.	AL	FF	1 / A 623	4 / A 623	7 / A 623		-		
MEZZ.	M01	STORAGE	M01	APPARATUS BAY	120	(2) 36" x 84"	08	HM	PT	F2	HM	PT	3 / A 623	(SIM.) DJ4	6 / A 623		7	•	DOUBLE DOOR WITH SAFETY GATE
	M02	STORAGE	M01	UTILITY	M02	36" x 84"	09	HM	PT	F1	HM	PT	DH7	DJ7	DS1		6	•	
	M03	STORAGE	M01	FILE STORAGE	M03	36" x 84"	01	HM	PT	F1	HM	PT	DH7	DJ7	DS1		6	•	
	M04	STORAGE	M01	I.T.	M04	36" x 84"	01	HM	PT	F1	HM	PT	DH7	DJ7	DS1		6	•	
SECOND FLOOR	200A	CORRIDOR	200	STAIR	'A'	36" x 84"	02	WD	FF	F1	HM	PT	DH7	DJ7	DS1	45 MIN.	21	•	MAGNETIC HOLD OPENS TIED INTO FIRE ALARM SYSTEM, SEE 'FA' DRAWINGS
	200B	CORRIDOR	200	STAIR	'B'	(2) 36" x 84"	06	WD	FF	F1	HM	PT	DH7	DJ7	DS1	45 MIN.	22	•	MAGNETIC HOLD OPENS TIED INTO FIRE ALARM SYSTEM, SEE 'FA' DRAWINGS
	201	CORRIDOR	200	KITCHEN	201	(2) 36" x 84"	06	WD	FF	F1	HM	PT	DH7	DJ7	DS6		10	•	
	201A	KITCHEN	201	PANTRY	201A	36" x 84"	01	WD	FF	F1	HM	PT	DH7	DJ7	DS1		6	•	
	201B	KITCHEN	201	MULTI-PURPOSE ROOM	203	36" x 84"	07	WD	FF	F1	HM	PT	DH6	DJ6	DS2		24	•	DOUBLE ACTING DOOR
	202	COMMISSIONERS	202	CORRIDOR	200	36" x 84"	07	WD	FF	F1	HM	PT	DH7	DJ7	DS4		11	•	
	203A	MULTI-PURPOSE ROOM	203A	STAIR	'B'	36" x 84"	02	WD	FF	F1	HM	PT	DH7	DJ7	DS4	45 MIN.	18	•	
	203B	MULTI-PURPOSE ROOM	203	CORRIDOR	200	(2) 36" x 84"	08	WD	FF	F1	HM	PT	DH7	DJ7	DS4		14	•	PROVIDE APPLIED DECORATIVE WINDOW FILM FULL SIZE OF VISION LITE
	203C	MULTI-PURPOSE ROOM	203	CORRIDOR	200	(2) 36" x 84"	08	WD	FF	F1	HM	PT	DH7	DJ7	DS4		14	•	PROVIDE APPLIED DECORATIVE WINDOW FILM FULL SIZE OF VISION LITE
	204	MULTI-PURPOSE STORAGE	204	MULTI-PURPOSE ROOM	203	(2) 36" x 84"	03	WD	FF	F1	HM	PT	DH7	DJ7	DS1		9	•	
	205	PURCHASING	205	CORRIDOR	200	36" x 84"	07	WD	FF	F1	HM	PT	DH7	DJ7	DS4		11	•	
	206	PRESIDENTS	206	CORRIDOR	200	36" x 84"	07	WD	FF	F1	HM	PT	DH7	DJ7	DS4		11	•	
	207	W. TOILET	207	CORRIDOR	200	36" x 84"	01	WD	FF	F1	HM	PT	DH7	DJ7	DS2		16	•	
	208	J.C.	208	CORRIDOR	200	36" x 84"	09	WD	FF	F1	HM	PT	DH7	DJ7	DS2		6	•	
	209	M. TOILET	209	CORRIDOR	200	36" x 84"	01	WD	FF	F1	HM	PT	DH7	DJ7	DS2		16	•	

ABBREVIATIONS

ALUM = ALUMINUM FF = FACTORY FINISH HM = HOLLOW METAL PT = PAINT ST = STAIN WD = WOOD DOOR • = DENOTES TO BE PROVIDED

GENERAL DOOR NOTES

1. ALL DOOR FRAMES TO BE SET 4" @ METAL STUD PARTITIONS AND 8" @ CMU PARTITIONS FROM ADJACENT FINISHED WALL SURFACE AND UNLESS DIMENSIONED OR NOTED OTHERWISE.
2. ALL GLASS LITES IN DOORS, INCLUDING SITE LITES, SHALL BE TEMPERED SAFETY GLAZING. ALL GLASS LITES IN FIRE RATED DOORS SHALL HAVE FIRE RESISTIVE GLAZING IN ACCORDANCE WITH NFPA 80.
3. ALL EXTERIOR DOORS ARE TO BE WEATHERSTRIPPED.
4. ALL INTERIOR DOORS SHALL HAVE A 5/8" UNDERCUT, UNLESS NOTED OTHERWISE. UNDERCUT SHALL BE MEASURED FROM THE TOP OF THE SADDLE OR FINISHED FLOOR. CONTRACTOR TO VERIFY IN FIELD AND COORDINATE WITH FINISHES.
5. REFER TO PROJECT MANUAL FOR HARDWARE INFORMATION.
6. TACTILE EXIT SIGNAGE SHALL BE PROVIDED ADJACENT TO EACH DOOR SERVING AN EXIT STAIRWAY, EXIT PASSAGE OR EXIT DISCHARGE.

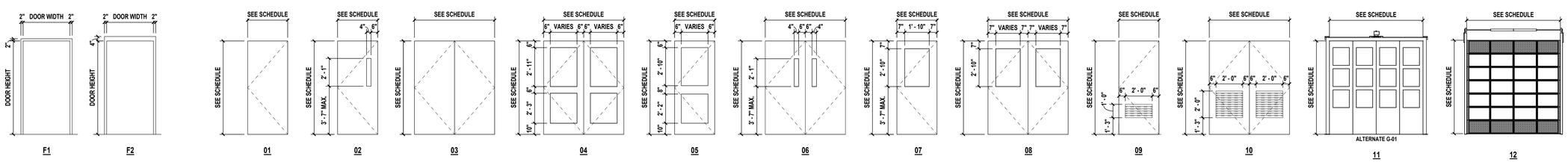

Frame Type
SCALE: 1/4" = 1'-0"

Door Types
SCALE: 1/4" = 1'-0"

H2M architects + engineers
538 Broad Hollow Road, 4th Floor East
Melville, NY 11747
631.756.8000 • www.h2m.com
NY Architecture & Landscape Architecture: No Certificate Required
NY Engineering Certificate of Authorization No.: 0018178

CONSULTANTS:

MARK	DATE	DESCRIPTION

REGISTERED ARCHITECT PATRICK O. STONE STATE OF NEW YORK 036954

10/31/2025
Exp. Date

PATRICK O. STONE, R.A.
NY PROFESSIONAL ARCHITECT Lic. No. 036954

"IN ACCORDANCE WITH ARTICLE 145, SECTION 7209 OF THE NYS EDUCATION LAW, ALTERATION OF THIS DOCUMENT EXCEPT BY A LICENSED PROFESSIONAL IS ILLEGAL."

DESIGNED BY:	DRAWN BY:	CHECKED BY:	REVIEWED BY:
DBS/RLG	ANK/KAP	DBS	POS
PROJECT No: TRFD 2302	DATE: FEBRUARY 2025	SCALE: AS SHOWN	

CLIENT

THIELLS ROSEVILLE FIRE DISTRICT

NEW 26-100 FIRE HEADQUARTERS

65 W RAMAPO ROAD
GARNERVILLE, NY 10923

CONTRACT

CONTRACT G
GENERAL CONSTRUCTION

STATUS

FINAL BID DOCUMENT

SHEET TITLE

DOOR SCHEDULE & DOOR TYPES

DRAWING No.

A 620.00

C:\Users\akaled\Documents\TRFD2302_Central23-A_AKaled.rvt

2/25/2025 4:09:54 PM

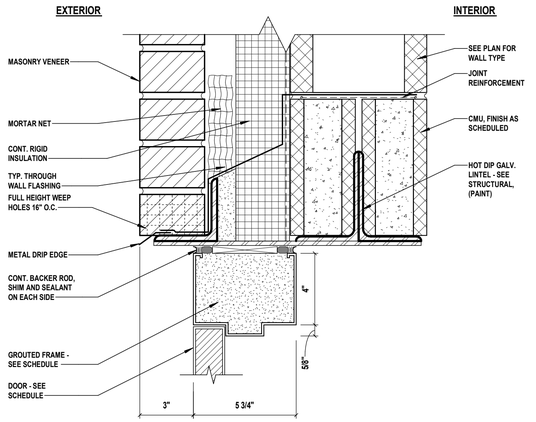

DH1 Door Head

SCALE: 3" = 1'-0" H2M Ref # DH3A-003

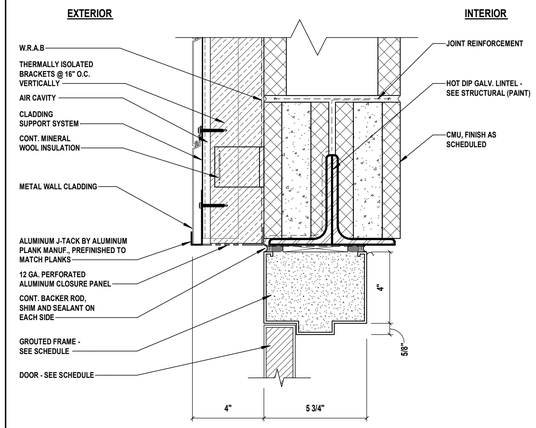

DH2 Door Head

SCALE: 3" = 1'-0" H2M Ref # DH3A-003

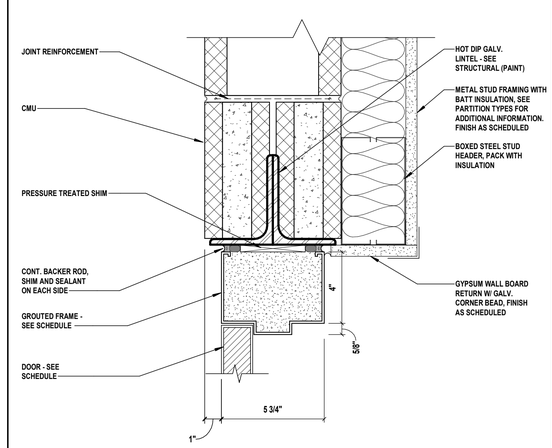

DH3 Door Head

SCALE: 3" = 1'-0" H2M Ref # DH3A-003

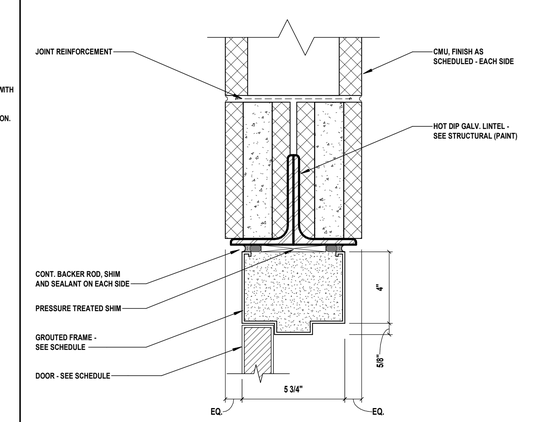

DH4 Door Head

SCALE: 3" = 1'-0" H2M Ref # DH3A-003

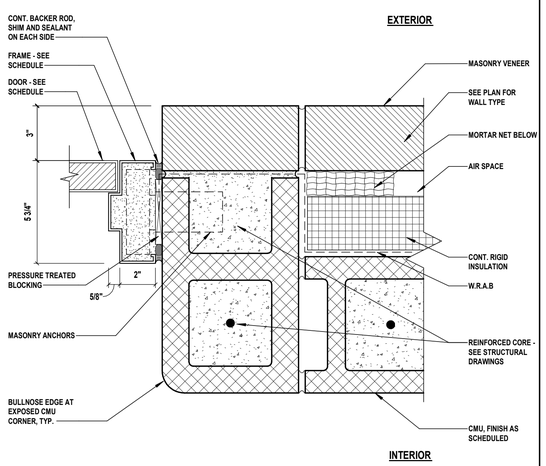

DJ1 Door Jamb

SCALE: 3" = 1'-0" H2M Ref # DH3A-003

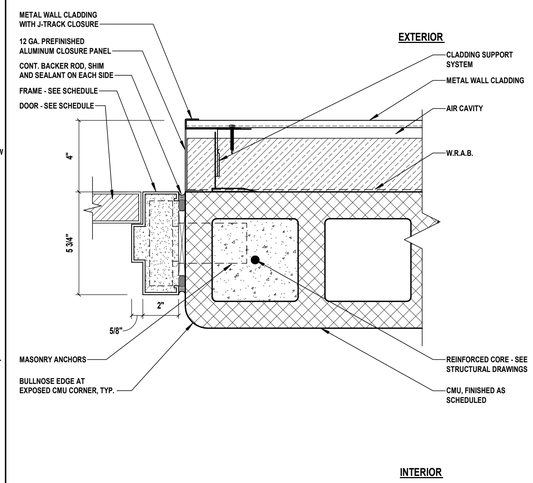

DJ2 Door Jamb

SCALE: 3" = 1'-0" H2M Ref # DH3A-003

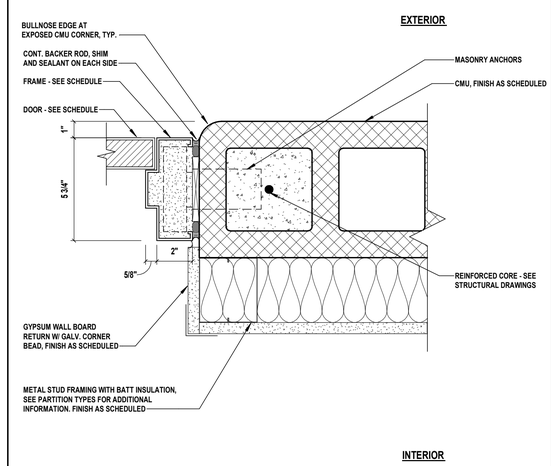

DJ3 Door Jamb

SCALE: 3" = 1'-0" H2M Ref # DH3A-003

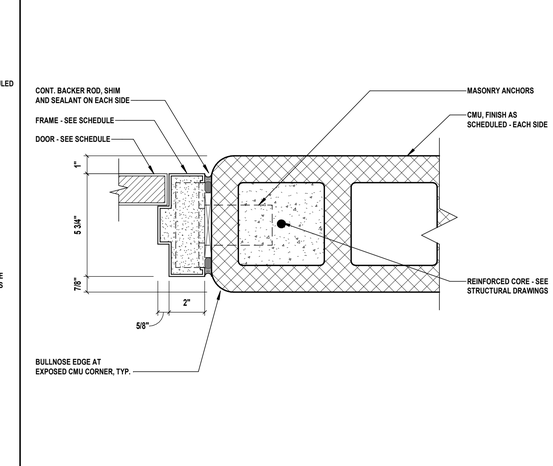

DJ4 Door Jamb

SCALE: 3" = 1'-0" H2M Ref # DH3A-003

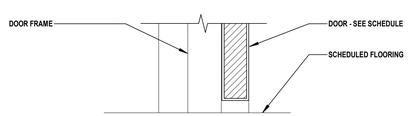

DS1 Saddle Detail

SCALE: 3" = 1'-0" H2M Ref # DS-001

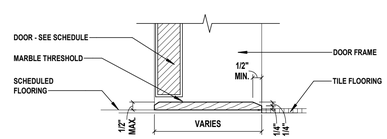

DS2 Saddle Detail

SCALE: 3" = 1'-0" H2M Ref # DS-002

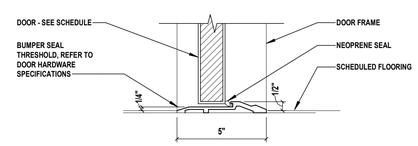

DS3 Saddle Detail

SCALE: 3" = 1'-0" H2M Ref # DS-003

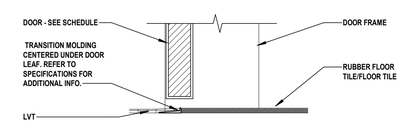

DS4 Saddle Detail

SCALE: 3" = 1'-0" H2M Ref # DS-004

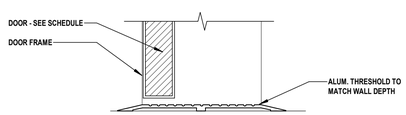

DS5 Saddle Detail

SCALE: 3" = 1'-0" H2M Ref # DS-008

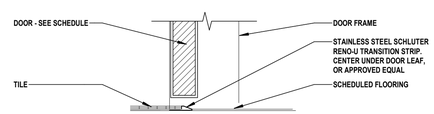

DS6 Saddle Detail

SCALE: 3" = 1'-0" H2M Ref # DS-006

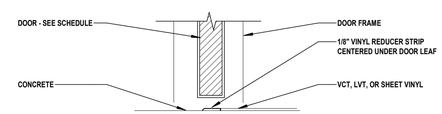

DS7 Saddle Detail

SCALE: 3" = 1'-0" H2M Ref # DS-006

H2M architects + engineers

538 Broad Hollow Road, 4th Floor East
Melville, NY 11747
631.756.8000 • www.h2m.com
NY Architecture & Landscape Architecture: No Certificate Required
NY Engineering Certificate of Authorization No.: 0018178

CONSULTANTS:

MARK	DATE	DESCRIPTION

REGISTERED ARCHITECT PATRICK O. STONE 039654 STATE OF NEW YORK

PATRICK O. STONE, R.A.
NY PROFESSIONAL ARCHITECT Lic. No. 039654

10/31/2025 Exp. Date

"IN ACCORDANCE WITH ARTICLE 145, SECTION 7209 OF THE NYS EDUCATION LAW, ALTERATION OF THIS DOCUMENT EXCEPT BY A LICENSED PROFESSIONAL IS ILLEGAL"

DESIGNED BY:	DRAWN BY:	CHECKED BY:	REVIEWED BY:
DBS/RLG	ANK	DBS	POS
PROJECT No: TRFD 2302	DATE: FEBRUARY 2025		SCALE: AS SHOWN

CLIENT

THIELLS ROSEVILLE FIRE DISTRICT

NEW 26-100 FIRE HEADQUARTERS

THIELLS 26 FD

65 W RAMAPO ROAD
GARNERVILLE, NY 10923

CONTRACT

CONTRACT G
GENERAL CONSTRUCTION

STATUS

FINAL BID DOCUMENT

SHEET TITLE

DOOR DETAILS

DRAWING No.

A 621.00

C:\Users\akaled\Documents\TRFD2302_Central23-A_AKaled.rvt

2/25/2025 4:09:55 PM

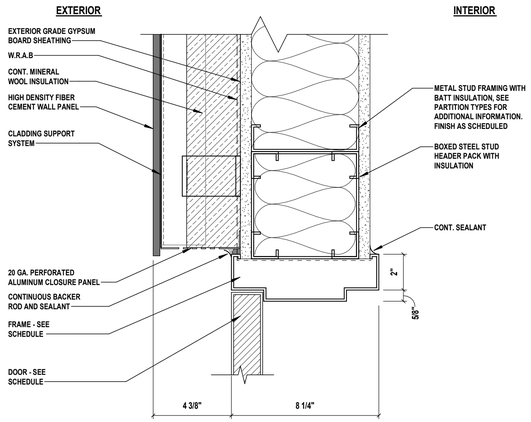

DH5 Door Head

SCALE: 3" = 1'-0"

H2M Ref # DH3A-003

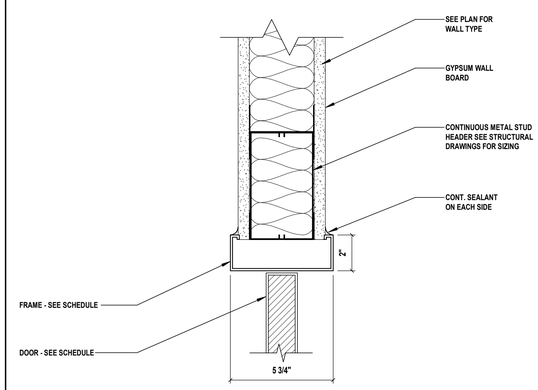

DH6 Door Head (Dual Swing)

SCALE: 3" = 1'-0"

H2M Ref # DH3A-003

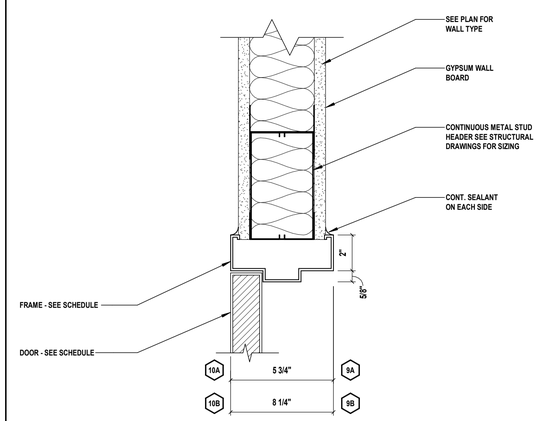

NOTE:
1. REFER TO CODE COMPLIANCE PLAN & PARTITION TYPES FOR ADDITIONAL INFORMATION ON FIRE RATED WALL LOCATIONS. ALL PENETRATIONS IN FIRE RATED PARTITIONS SHALL BE FIRESTOPPED.

DH7 Door Head

SCALE: 3" = 1'-0"

H2M Ref # DH3A-003

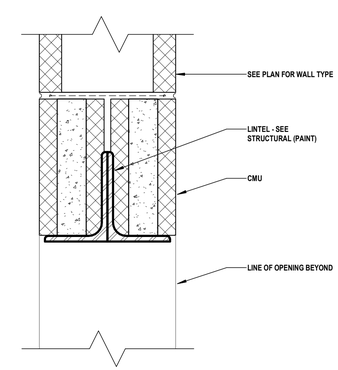

DH8 Masonry Opening Head

SCALE: 3" = 1'-0"

H2M Ref # DH3A-003

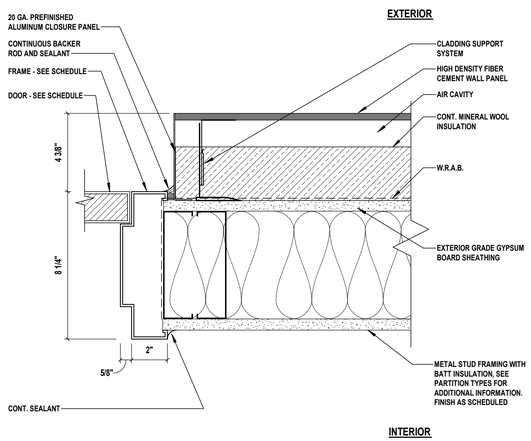

DJ5 Door Jamb

SCALE: 3" = 1'-0"

H2M Ref # DH3A-003

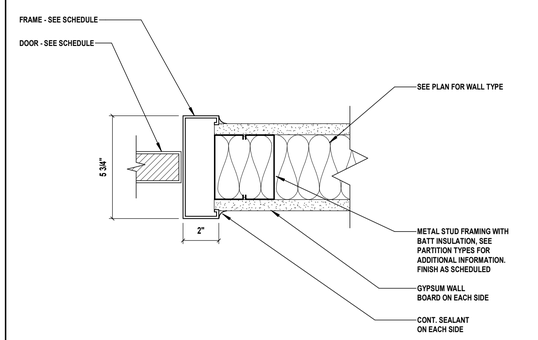

DJ6 Door Jamb (Dual Swing)

SCALE: 3" = 1'-0"

H2M Ref # DH3A-003

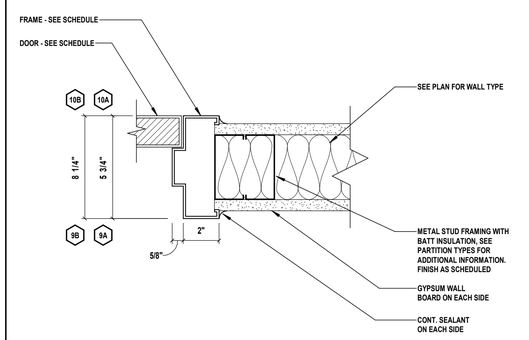

NOTE:
1. REFER TO CODE COMPLIANCE PLAN & PARTITION TYPES FOR ADDITIONAL INFORMATION ON FIRE RATED WALL LOCATIONS. ALL PENETRATIONS IN FIRE RATED PARTITIONS SHALL BE FIRESTOPPED.

DJ7 Door Jamb

SCALE: 3" = 1'-0"

H2M Ref # DH3A-003

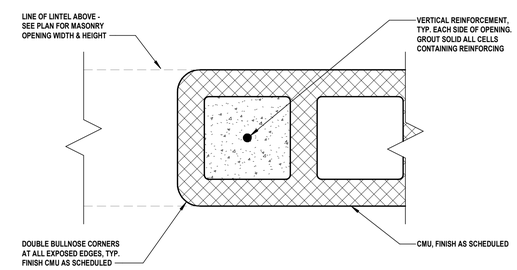

DJ8 Masonry Opening Jamb

SCALE: 3" = 1'-0"

H2M Ref # DH3A-003

H 2 M architects + engineers

538 Broad Hollow Road, 4th Floor East
Melville, NY 11747
631.756.8000 • www.h2m.com
NY Architecture & Landscape Architecture: No Certificate Required
NY Engineering Certificate of Authorization No.: 0018178

CONSULTANTS:

MARK	DATE	DESCRIPTION

REGISTERED ARCHITECT PATRICK O. STONE STATE OF NEW YORK 039654

10/31/2025
Exp. Date

PATRICK O. STONE, R.A.
NY PROFESSIONAL ARCHITECT Lic. No. 039654

"IN ACCORDANCE WITH ARTICLE 145, SECTION 7209 OF THE NYS EDUCATION LAW, ALTERATION OF THIS DOCUMENT EXCEPT BY A LICENSED PROFESSIONAL IS ILLEGAL."

DESIGNED BY:	DRAWN BY:	CHECKED BY:	REVIEWED BY:
DBS/RLG	ANK	DBS	POS
PROJECT No: TRFD 2302	DATE: FEBRUARY 2025	SCALE: AS SHOWN	

CLIENT

THIELLS ROSEVILLE FIRE DISTRICT

NEW 26-100 FIRE HEADQUARTERS

THIELLS 26 FD

65 W RAMAPO ROAD
GARNERVILLE, NY 10923

CONTRACT

CONTRACT G
GENERAL CONSTRUCTION

STATUS

FINAL BID DOCUMENT

SHEET TITLE

DOOR DETAILS

DRAWING No.

A 622.00

C:\Users\ankel\Documents\TRFD2302_Central23-A_AKalled.rvt

2/25/2025 4:05:56 PM

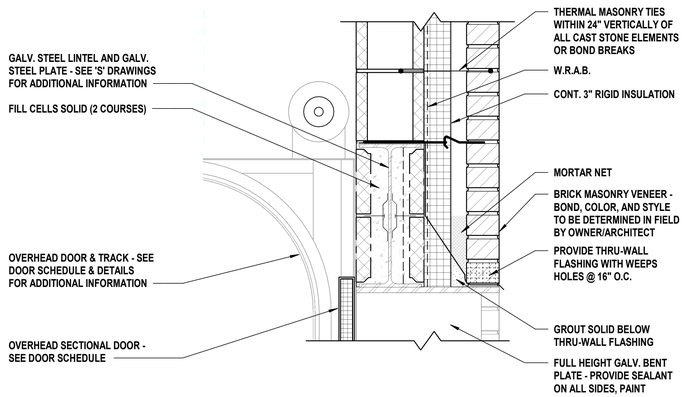

1 Overhead Door Head Detail (Base Bid)

SCALE: 1 1/2" = 1'-0"

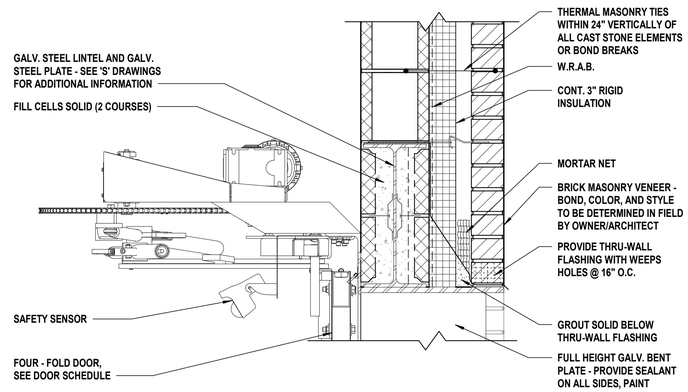

2 Fold Door Head Detail (Alternate G-01)

SCALE: 1 1/2" = 1'-0"

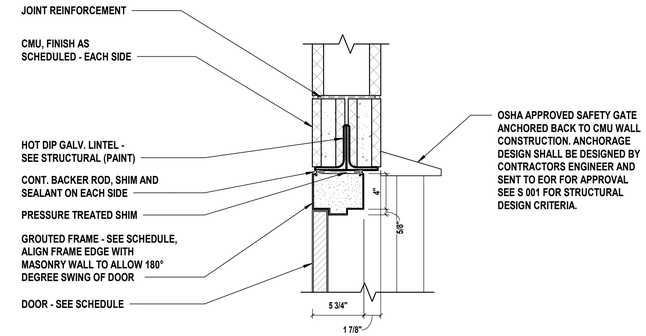

3 Mezzanine Door Gate Head Detail

SCALE: 1 1/2" = 1'-0"

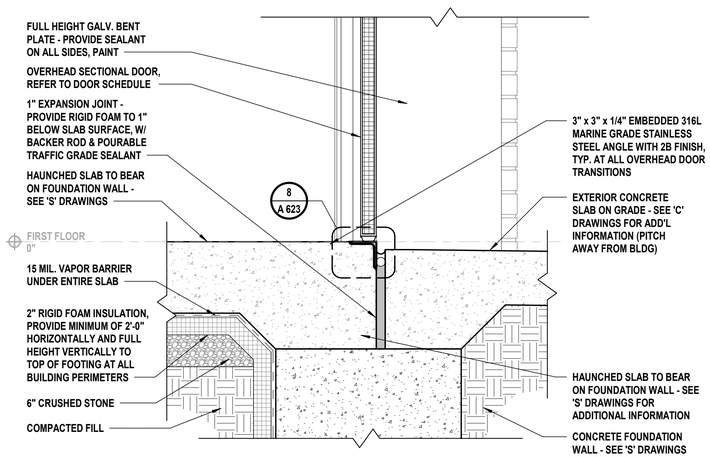

4 Overhead Door Saddle Detail (Base Bid)

SCALE: 1 1/2" = 1'-0"

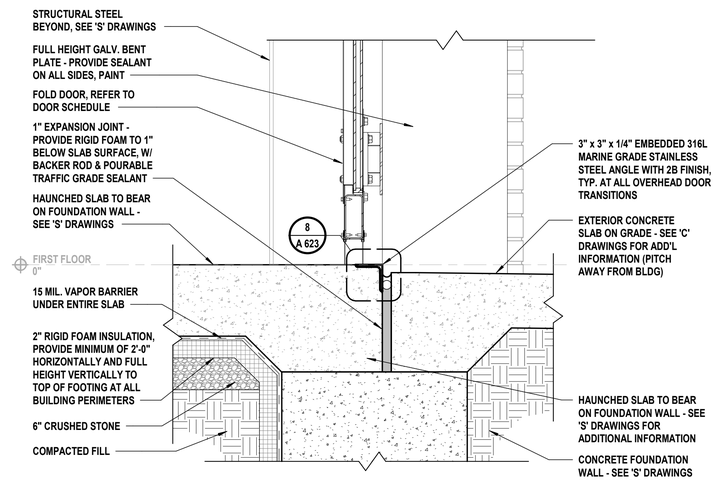

5 Fold Door Saddle Detail (Alternate G-01)

SCALE: 1 1/2" = 1'-0"

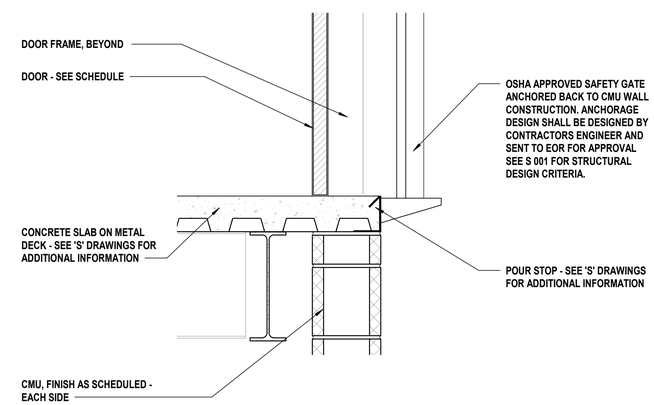

6 Mezzanine Door Gate Sill Detail

SCALE: 1 1/2" = 1'-0"

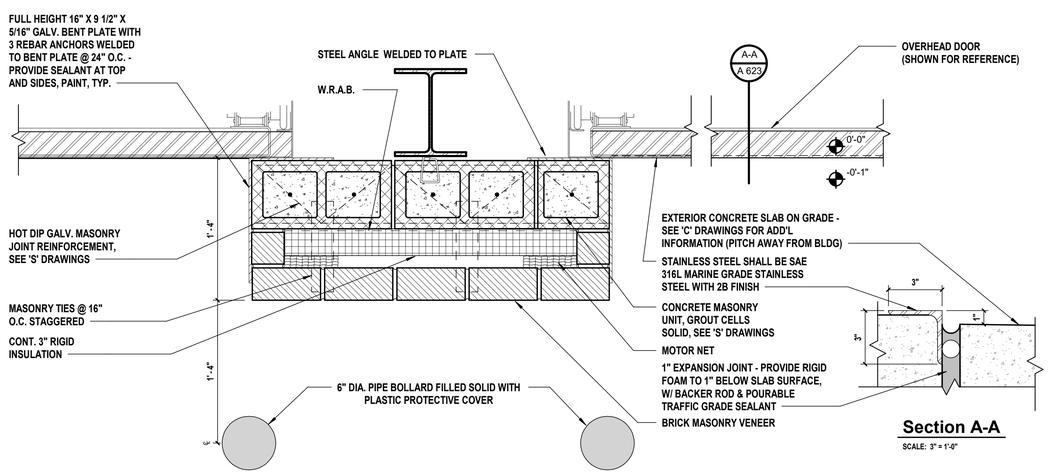

Section A-A

SCALE: 3" = 1'-0"

7 Overhead Door Jamb Detail (Base Bid)

SCALE: 1 1/2" = 1'-0"

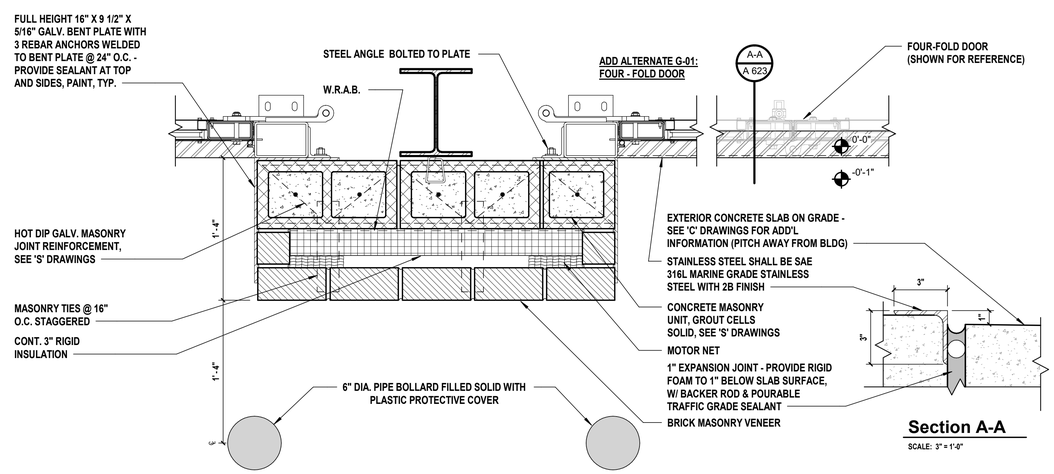

Section A-A

SCALE: 3" = 1'-0"

8 Fold Door Jamb Detail (Alternate G-01)

SCALE: 1 1/2" = 1'-0"

C:\Users\akaled\Documents\TRFD2302_Central23-A_AKaled.rvt

2/25/2025 4:10:01 PM

H2M architects + engineers

538 Broad Hollow Road, 4th Floor East
Melville, NY 11747
631.756.8000 • www.h2m.com
NY Architecture & Landscape Architecture: No Certificate Required
NY Engineering Certificate of Authorization No.: 0018178

CONSULTANTS:

MARK	DATE	DESCRIPTION

REGISTERED ARCHITECT PATRICK O. STONE STATE OF NEW YORK 039654

10/31/2025
Exp. Date

PATRICK O. STONE, R.A.
NY PROFESSIONAL ARCHITECT LIC. No. 039654

"IN ACCORDANCE WITH ARTICLE 145, SECTION 7209 OF THE NYS EDUCATION LAW, ALTERATION OF THIS DOCUMENT EXCEPT BY A LICENSED PROFESSIONAL IS ILLEGAL."

DESIGNED BY:	DRAWN BY:	CHECKED BY:	REVIEWED BY:
DBS/RLG	ANK	DBS	POS
PROJECT No: TRFD 2302	DATE: FEBRUARY 2025	SCALE: AS SHOWN	

CLIENT

THIELLS ROSEVILLE FIRE DISTRICT

NEW 26-100 FIRE HEADQUARTERS

THIELLS 26 FD

65 W RAMAPO ROAD
GARNERVILLE, NY 10923

CONTRACT

CONTRACT G
GENERAL CONSTRUCTION

STATUS

FINAL BID DOCUMENT

SHEET TITLE

DOOR DETAILS

DRAWING No.

A 623.00

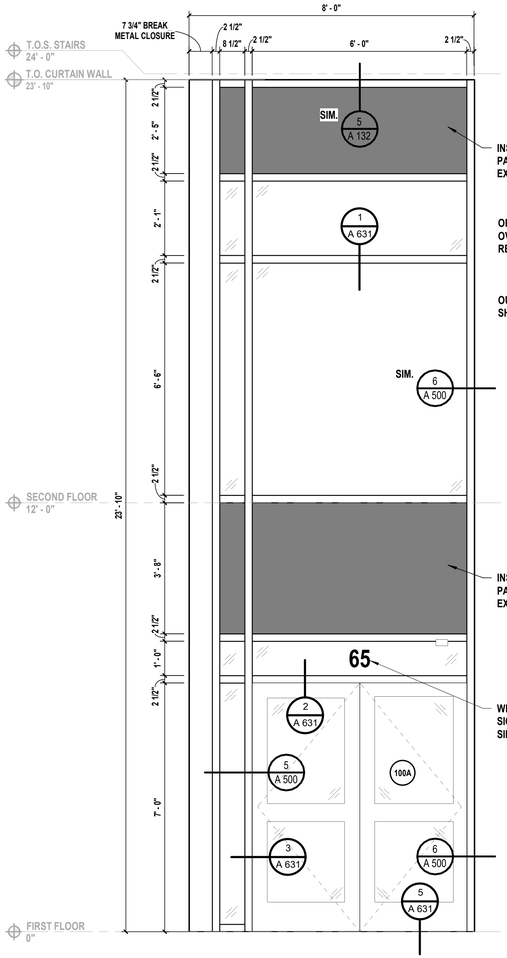

G Curtain Wall Type G
SCALE: 1/2" = 1'-0"

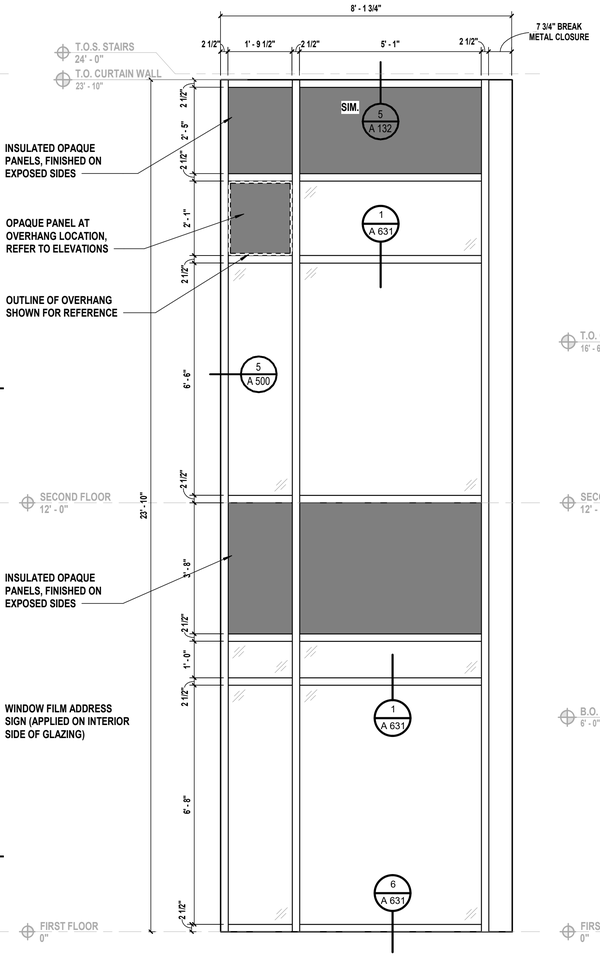

H Curtain Wall Type H
SCALE: 1/2" = 1'-0"

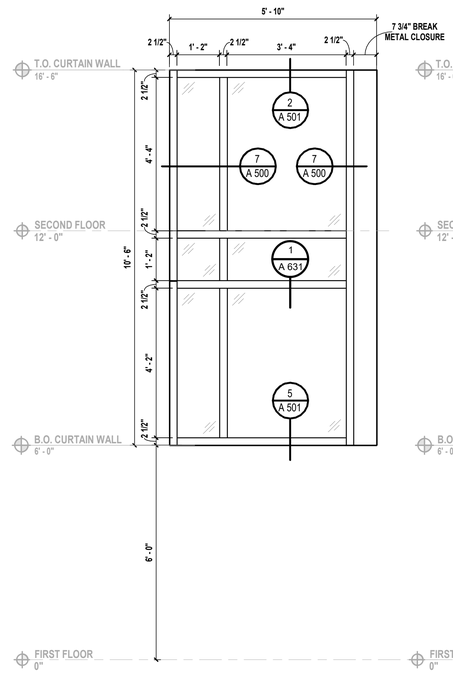

I Curtain Wall Type I
SCALE: 1/2" = 1'-0"

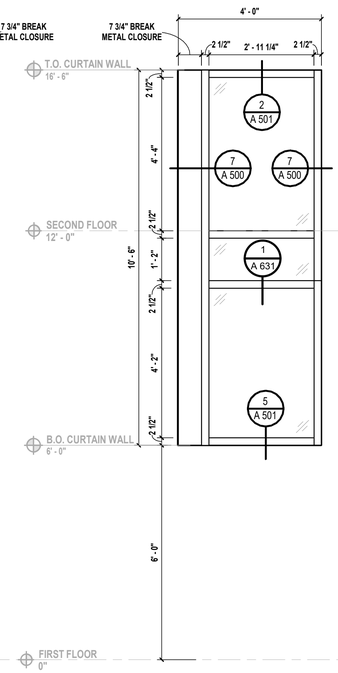

J Curtain Wall Type J
SCALE: 1/2" = 1'-0"

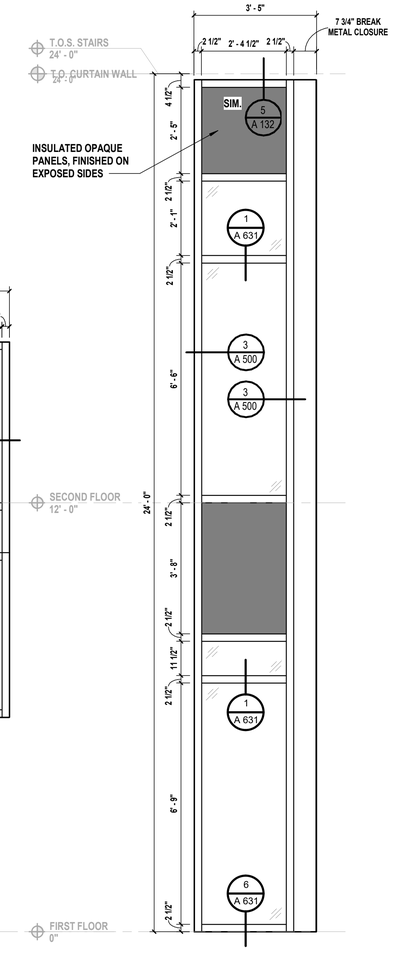

K Curtain Wall Type K
SCALE: 1/2" = 1'-0"

C:\Users\akaled\Documents\TRFD2302_Central23-A_AKaled.rvt

2/25/2025 4:10:07 PM

H2M architects + engineers

538 Broad Hollow Road, 4th Floor East
Melville, NY 11747
631.756.8000 • www.h2m.com
NY Architecture & Landscape Architecture: No Certificate Required
NY Engineering Certificate of Authorization No.: 0018178

CONSULTANTS:

MARK	DATE	DESCRIPTION

REGISTERED ARCHITECT PATRICK O. STONE 0396654 STATE OF NEW YORK

PATRICK O. STONE, R.A.
NY PROFESSIONAL ARCHITECT Lic. No. 036654
Exp. Date 10/31/2025

"IN ACCORDANCE WITH ARTICLE 145, SECTION 7209 OF THE NYS EDUCATION LAW, ALTERATION OF THIS DOCUMENT EXCEPT BY A LICENSED PROFESSIONAL IS ILLEGAL"

DESIGNED BY:	DRAWN BY:	CHECKED BY:	REVIEWED BY:
DBS/RLG	KAP	DBS	POS

PROJECT No:	DATE:	SCALE:
TRFD 2302	FEBRUARY 2025	AS SHOWN

CLIENT

THIELLS ROSEVILLE FIRE DISTRICT

NEW 26-100 FIRE HEADQUARTERS

THIELLS 26 FD

65 W RAMAPO ROAD
GARNERVILLE, NY 10923

CONTRACT

CONTRACT G
GENERAL CONSTRUCTION

STATUS

FINAL BID DOCUMENT

SHEET TITLE

CURTAIN WALL TYPES

DRAWING No.

A 630.00

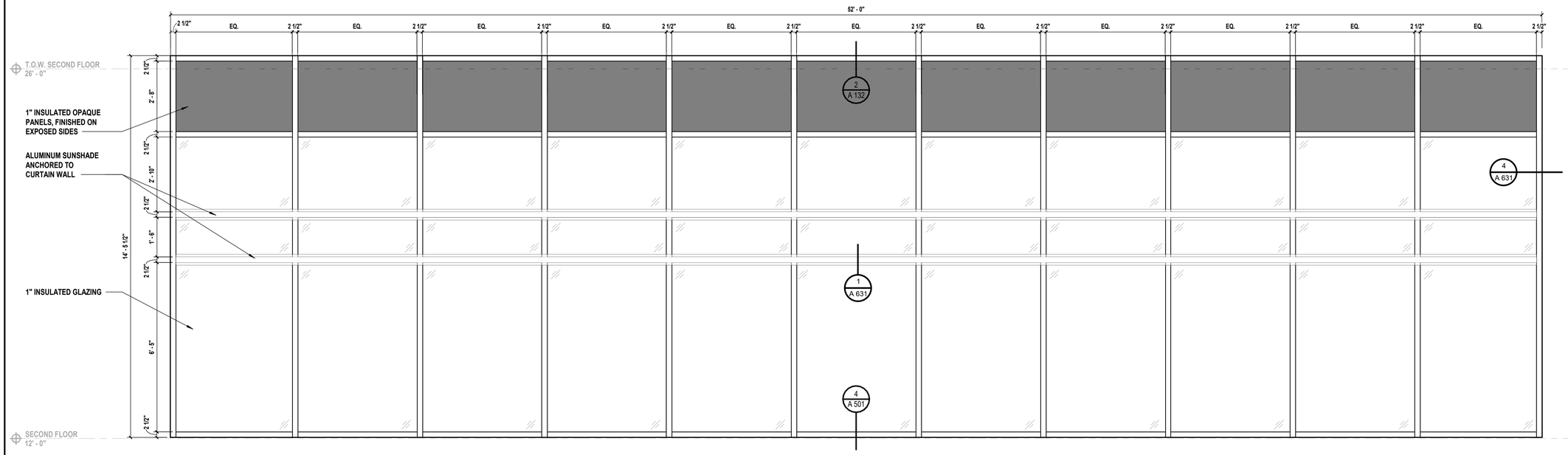

L Curtain Wall Type L

SCALE: 1/2" = 1'-0"

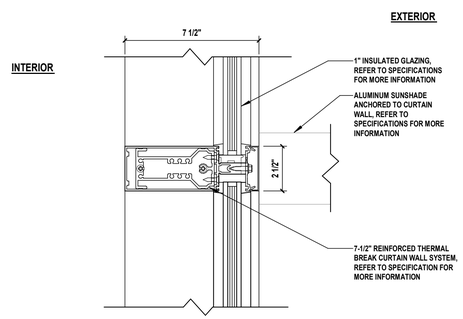

1 Horizontal Detail

SCALE: 3" = 1'-0"

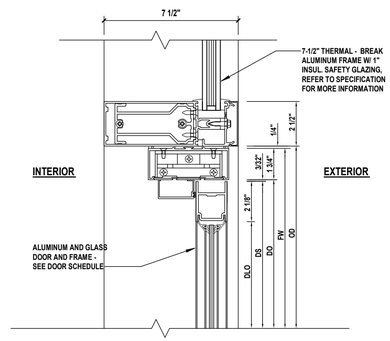

2 Door Head Detail

SCALE: 3" = 1'-0"

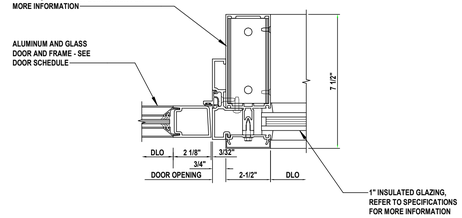

3 Door Jamb Detail

SCALE: 3" = 1'-0"

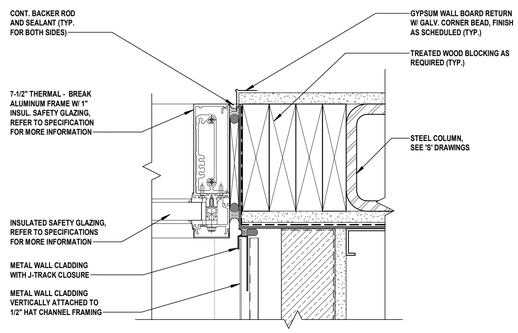

4 Curtain Wall Jamb

SCALE: 3" = 1'-0"

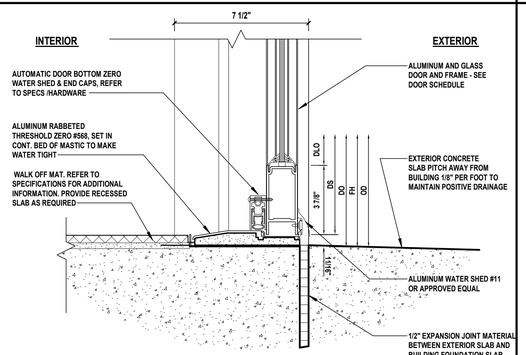

5 Door Threshold Detail

SCALE: 3" = 1'-0"

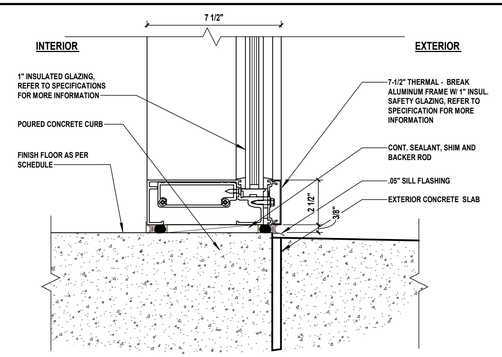

6 Curtain Wall Sill

SCALE: 3" = 1'-0"

H 2 M architects + engineers

538 Broad Hollow Road, 4th Floor East
Melville, NY 11747
631.756.8000 • www.h2m.com
NY Architecture & Landscape Architecture: No Certificate Required
NY Engineering Certificate of Authorization No.: 0018178

CONSULTANTS:

MARK	DATE	DESCRIPTION

REGISTERED ARCHITECT PATRICK O. STONE STATE OF NEW YORK 039654

10/31/2025
Exp. Date

PATRICK O. STONE, R.A.
NY PROFESSIONAL ARCHITECT Lic. No. 039654

"IN ACCORDANCE WITH ARTICLE 145, SECTION 7209 OF THE NYS EDUCATION LAW, ALTERATION OF THIS DOCUMENT EXCEPT BY A LICENSED PROFESSIONAL IS ILLEGAL"

DESIGNED BY:	DRAWN BY:	CHECKED BY:	REVIEWED BY:
DBS/RLG	KAP	DBS	POS
PROJECT No: TRFD 2302	DATE: FEBRUARY 2025	SCALE: AS SHOWN	

CLIENT

THIELLS ROSEVILLE FIRE DISTRICT

NEW 26-100 FIRE HEADQUARTERS

65 W RAMAPO ROAD
GARNERVILLE, NY 10923

CONTRACT

CONTRACT G
GENERAL CONSTRUCTION

STATUS

FINAL BID DOCUMENT

SHEET TITLE

CURTAIN WALL TYPES & DETAILS

DRAWING No.

A 631.00

C:\Users\akaleel\Documents\TRFD2302_Central23-A_AKaleel.rvt

2/25/2025 4:10:12 PM

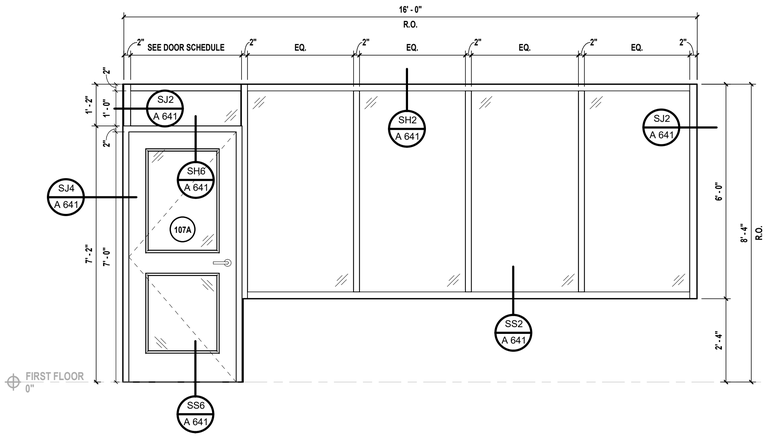

M Storefront Type M
SCALE: 1/2" = 1'-0"

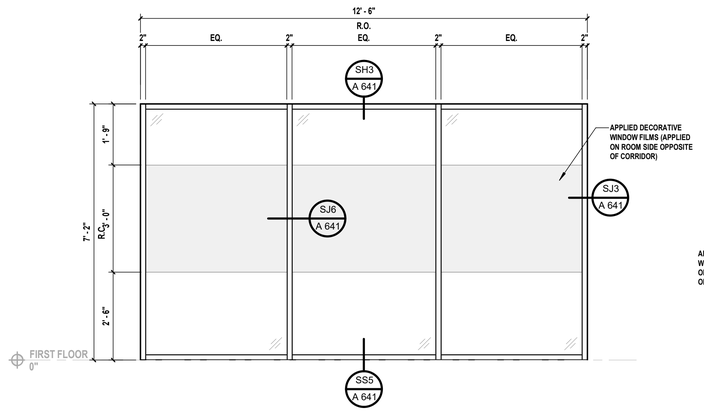

N Storefront Type N
SCALE: 1/2" = 1'-0"

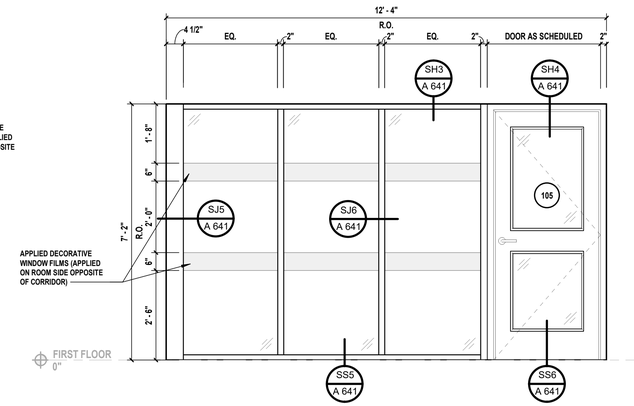

O Storefront Type O
SCALE: 1/2" = 1'-0"

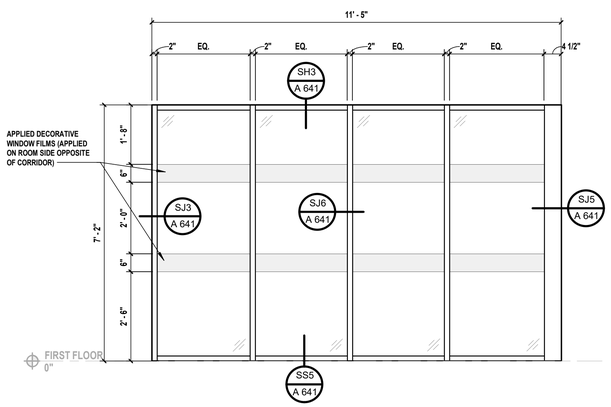

P Storefront Type P
SCALE: 1/2" = 1'-0"

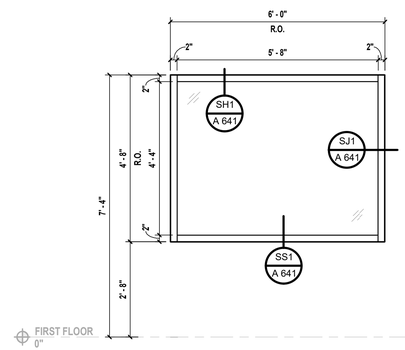

Q Storefront Type Q
SCALE: 1/2" = 1'-0"

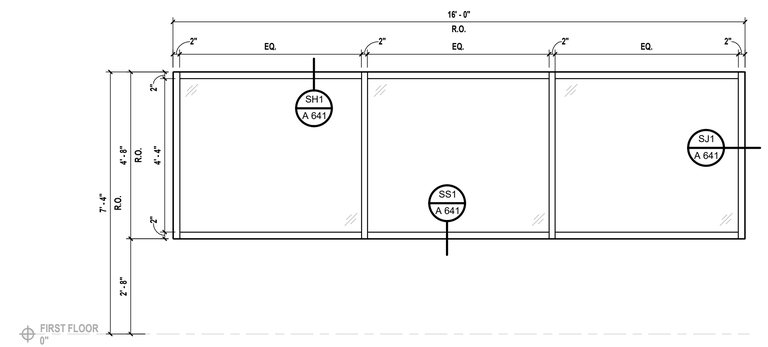

R Storefront Type R
SCALE: 1/2" = 1'-0"

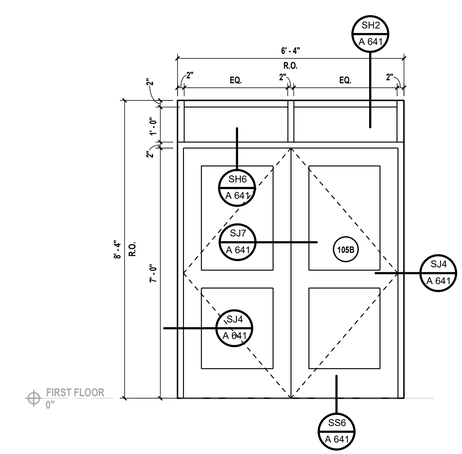

S Storefront Type S
SCALE: 1/2" = 1'-0"

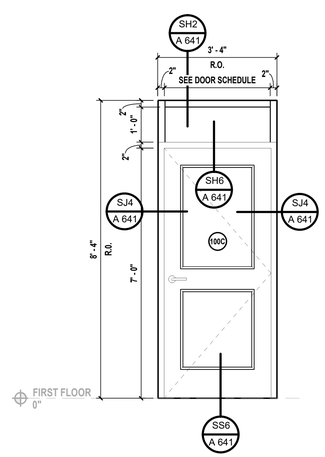

T Storefront Type T
SCALE: 1/2" = 1'-0"

C:\Users\akaled\Documents\TRFD2302_Central23-A_AKaled.rvt

2/25/2025 4:10:21 PM

H 2 M architects + engineers

538 Broad Hollow Road, 4th Floor East
Melville, NY 11747
631.756.8000 • www.h2m.com
NY Architecture & Landscape Architecture: No Certificate Required
NY Engineering Certificate of Authorization No.: 0018178

CONSULTANTS:

MARK	DATE	DESCRIPTION

REGISTERED ARCHITECT PATRICK OTTO STONE 039654 STATE OF NEW YORK

10/31/2025
Exp. Date

PATRICK O. STONE, R.A.
NY PROFESSIONAL ARCHITECT Lic. No. 039654

"IN ACCORDANCE WITH ARTICLE 145, SECTION 7209 OF THE NYS EDUCATION LAW, ALTERATION OF THIS DOCUMENT EXCEPT BY A LICENSED PROFESSIONAL IS ILLEGAL"

DESIGNED BY:	DRAWN BY:	CHECKED BY:	REVIEWED BY:
DBS/RLG	KAP/ANK	DBS	POS

PROJECT No:	DATE:	SCALE:
TRFD 2302	FEBRUARY 2025	AS SHOWN

CLIENT

THIELLS ROSEVILLE FIRE DISTRICT

NEW 26-100 FIRE HEADQUARTERS

65 W RAMAPO ROAD
GARNERVILLE, NY 10923

CONTRACT

CONTRACT G
GENERAL CONSTRUCTION

STATUS

FINAL BID DOCUMENT

SHEET TITLE

STOREFRONT TYPES

DRAWING No.

A 640.00

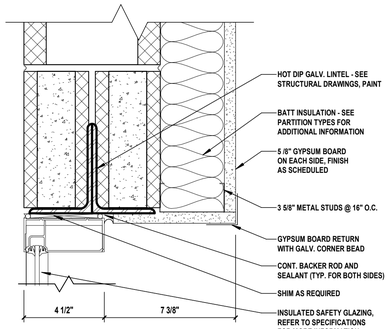

SH1 Storefront Head Detail
SCALE: 3" = 1'-0"

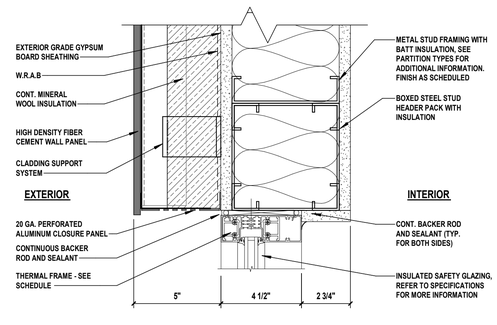

SH2 Storefront Head Detail
SCALE: 3" = 1'-0"

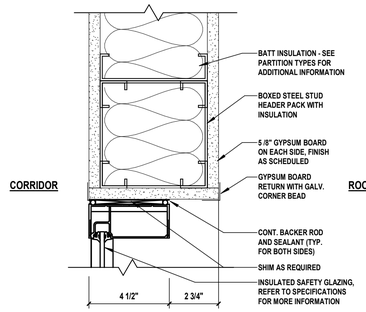

SH3 Storefront Head Detail
SCALE: 3" = 1'-0"

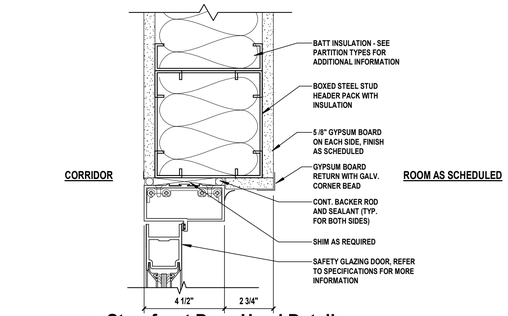

SH4 Storefront Door Head Detail
SCALE: 3" = 1'-0"

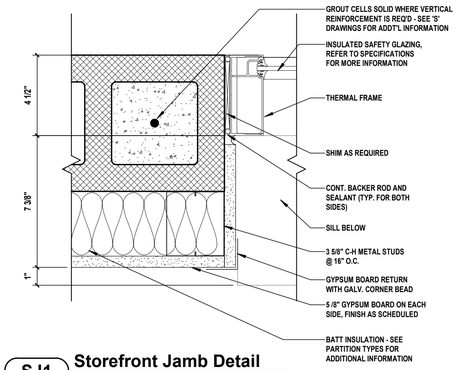

SJ1 Storefront Jamb Detail
SCALE: 3" = 1'-0"

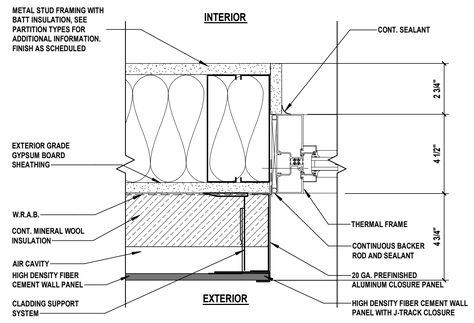

SJ2 Storefront Jamb Detail
SCALE: 3" = 1'-0"

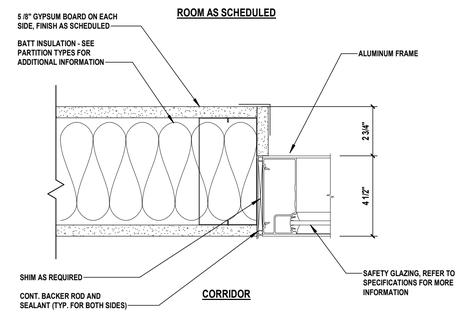

SJ3 Jamb Detail
SCALE: 3" = 1'-0"

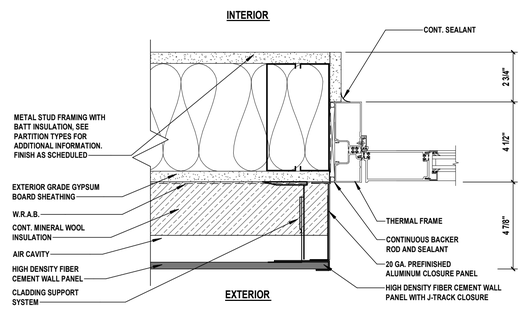

SJ4 Storefront Door Jamb Detail
SCALE: 3" = 1'-0"

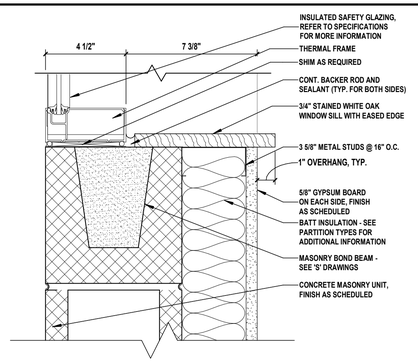

SS1 Storefront Sill Detail
SCALE: 3" = 1'-0"

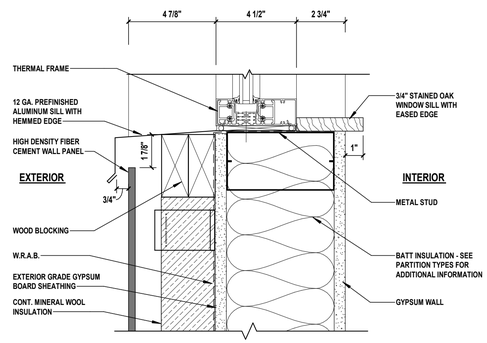

SS2 Storefront Head Detail
SCALE: 3" = 1'-0"

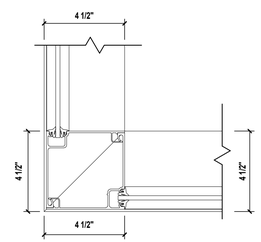

SJ5 Outside Corner Detail
SCALE: 3" = 1'-0"

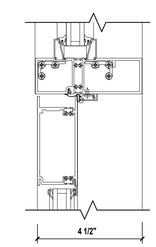

SH6 Storefront Door Head Detail
SCALE: 3" = 1'-0"

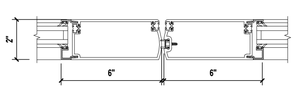

SJ7 Double Door Middle Stile
SCALE: 3" = 1'-0"

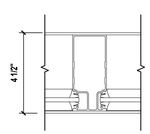

SJ6 Vertical Mullion Detail
SCALE: 3" = 1'-0"

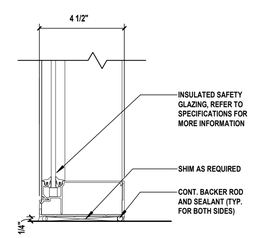

SS5 Sill Detail
SCALE: 3" = 1'-0"

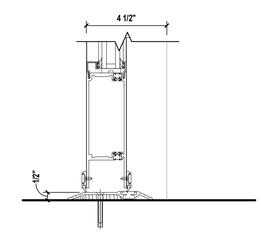

SS6 Storefront Door Threashold
SCALE: 3" = 1'-0"

H2M architects + engineers
538 Broad Hollow Road, 4th Floor East
Melville, NY 11747
631.756.8000 • www.h2m.com
NY Architecture & Landscape Architecture: No Certificate Required
NY Engineering Certificate of Authorization No.: 0018178

CONSULTANTS:

MARK	DATE	DESCRIPTION

REGISTERED ARCHITECT PATRICK O. STONE 039654 STATE OF NEW YORK

10/31/2025
Exp. Date

PATRICK O. STONE, R.A.
NY PROFESSIONAL ARCHITECT Lic. No. 039654

"IN ACCORDANCE WITH ARTICLE 145, SECTION 7209 OF THE NYS EDUCATION LAW, ALTERATION OF THIS DOCUMENT EXCEPT BY A LICENSED PROFESSIONAL IS ILLEGAL."

DESIGNED BY:	DRAWN BY:	CHECKED BY:	REVIEWED BY:
DBS/RLG	KAP/ANK	DBS	POS
PROJECT No: TRFD 2302	DATE: FEBRUARY 2025	SCALE: AS SHOWN	

CLIENT

THIELLS ROSEVILLE FIRE DISTRICT

NEW 26-100 FIRE HEADQUARTERS

65 W RAMAPO ROAD
GARNERVILLE, NY 10923

CONTRACT

CONTRACT G
GENERAL CONSTRUCTION

STATUS

FINAL BID DOCUMENT

SHEET TITLE

STOREFRONT DETAILS

DRAWING No.

A 641.00

C:\Users\akaled\Documents\TRFD2302_Central23-A_AKaled.rvt

2/25/2025 4:10:22 PM

LEGEND

SYMBOL	DESCRIPTION
	PIPING UP
	PIPING DOWN
	PIPING RISE OR DROP
	BRANCH-TOP CONNECTION
	BRANCH-BOTTOM CONNECTION
	REDUCER
CO CO	CLEANOUT
	FLOOR CLEANOUT
	CAPPED PIPE
M	METER
	FLOOR DRAIN
	AQUASTAT
	PUMP
	STRAINER
	UNION
	THERMOSTATIC MIXING VALVE
	BALANCING VALVE (BLV)
	GLOBE VALVE (GLV)
	CHECK VALVE (CV)
	GAS COCK, GAS STOP
	BALL VALVE (BV)
	BUTTERFLY VALVE (BFV)
S	SOLENOID VALVE
	PRESSURE-REDUCING VALVE (PRV)
	GATE VALVE (GV)
	PRESSURE-RELIEF VALVE (RV)
	BACKFLOW PREVENTER
	FROST FREE HOSE BIBB
	HOSE BIBB
	RECESSED-BOX HOSE BIBB OR WALL HYDRANT
	EXPANSION JOINT
	WATER HAMMER ARRESTER
	VALVE IN RISER
CO	WALL CLEANOUT (WCO)
	PITCH DOWN OR UP IN DIRECTION OF ARROW
	FLOW IN DIRECTION OF ARROW
	COLD WATER (CW)
	TEMPERED WATER (TW)
	HOT WATER (HW)
	TEMPERED WATER RETURN (TWR)
	HOT WATER RETURN (HWR)
	WASTE PIPING (W,S,OW)
	BELOW SLAB WASTE PIPING
	VENT PIPING (V)
	GAS PIPING (G)
	TO BE REMOVED
	POINT OF CONNECTION
	POINT OF DISCONNECTION

ABBREVIATIONS

AFF	ABOVE FINISHED FLOOR
BTU	BRITISH THERMAL UNIT
BTUH	BTU PER HOUR
CLG	CEILING
CO	CLEAN OUT
CODP	CLEAN OUT DECK PLATE
COWP	CLEAN OUT WALL PLATE
CW	COLD WATER
(D)	DEMOLISH
DCV	DOUBLE CHECK VALVE DEVICE
DEG. F	° FAHRENHEIT
DIA	DIAMETER
DN	DOWN
(E)	EXISTING
EA	EACH
FAI	FRESH AIR INTAKE
FD	FLOOR DRAIN
G	GAS
'GC'	GENERAL CONSTRUCTION CONTRACTOR
GPM	GALLONS PER MINUTE
GPH	GALLONS PER HOUR
'H'	HVAC CONTRACTOR
HP	HORSEPOWER
HW	HOT WATER
HWR	HOT WATER RETURN
IN.	INCHES
IN. W.C. (W.G.)	INCHES WATER COLUMN (WATER GAUGE)
KW	KILOWATTS
LBS	POUNDS
M	METER
MAX	MAXIMUM
MIN	MINIMUM
NTS	NOT TO SCALE
OD	OUTER DIAMETER
(P)	PROPOSED
'P'	PLUMBING CONTRACTOR
PD	PRESSURE DROP
RD	ROOF DRAIN
RPM	REVOLUTIONS PER MINUTE
RPZ	REDUCED PRESSURE ZONE
SAN / S	SANITARY
ST	STORM DRAIN
TEMP	TEMPERATURE
TYP	TYPICAL
TW	TEMPERED WATER (110°F)
TWR	TEMPERED WATER RETURN
V	VENT
VTR	VENT THROUGH ROOF
W	WASTE

GENERAL PLUMBING NOTES

1. PROVIDE ALL MATERIALS AND EQUIPMENT AND PERFORM ALL LABOR REQUIRED TO INSTALL COMPLETE AND OPERABLE PLUMBING SYSTEMS AS INDICATED ON THE DRAWINGS, AS SPECIFIED AND AS REQUIRED BY CODE.
2. THE CONTRACTOR, BY PRESENTING THEIR BID FOR THE WORK, REPRESENTS THAT HE/SHE HAS INSPECTED THE SITE AND IS COMPLETELY FAMILIAR WITH THE SCOPE OF WORK AND ALL FIELD CONDITIONS RELATED TO, AND AFFECTING THE WORK AND ITS PERFORMANCE. EXCEPTIONS AFFECTING THE WORK AND ITS PERFORMANCE, OR CONFLICTS BETWEEN FIELD CONDITIONS, SHALL BE BROUGHT TO THE ATTENTION OF THE ARCHITECT/ENGINEER PRIOR TO THE SUBMISSION OF BIDS.
3. PERFORM ALL WORK IN ACCORDANCE WITH THE 2020 PLUMBING CODE OF NEW YORK STATE (PCNYS), MECHANICAL (MCNYS), ENERGY CONSERVATION CONSTRUCTION CODE OF NEW YORK STATE (ECCCNYS) CODE AND THE REQUIREMENTS OF THE LOCAL AUTHORITIES HAVING JURISDICTION.
4. APPLY FOR AND SECURE ALL REQUIRED PERMITS AND INSPECTIONS AND PAY ALL COSTS FOR THE SAME.
5. DO NOT SCALE DRAWINGS. DRAWINGS FOR PLUMBING WORK ARE DIAGRAMMATIC AND ARE INTENDED TO CONVEY SCOPE AND GENERAL ARRANGEMENT ONLY. THE LOCATIONS OF ALL ITEMS SHOWN ON THE DRAWINGS OR CALLED FOR IN THE SPECIFICATIONS THAT ARE NOT DEFINITELY FIXED BY DIMENSIONS ARE APPROXIMATE.
6. COORDINATE CONTRACT DOCUMENTS PROJECT REQUIREMENTS, WORK OF OTHERS, AND EQUIPMENT AND MATERIALS PURCHASED WITH FIELD DIMENSIONS, MANUFACTURERS REQUIREMENTS FOR INSTALLATION, OPERATION, AND MAINTENANCE, CONTRACTORS INTENDED MEANS AND METHODS OF INSTALLATION AND CONTRACTORS FABRICATED ITEMS TO ENSURE A PROPER "FIT" AND INSTALLATION. BRING ANY CONFLICTS TO THE ATTENTION OF THE ARCHITECT/ENGINEER DURING THE SUBMITTAL PHASE FOR RESOLUTION PRIOR TO PURCHASING ANY EQUIPMENT.
7. FIELD VERIFY AND COORDINATE ALL PIPING DIMENSIONS BEFORE FABRICATION. MAKE MODIFICATIONS IN THE LAYOUT AS NEEDED TO PREVENT CONFLICT WITH WORK OF OTHER TRADES OR FOR PROPER EXECUTION OF THE WORK. OBTAIN THE APPROVAL OF THE ARCHITECT/ENGINEER FOR MODIFICATIONS.
8. PROVIDE PRODUCTS OF ONE MANUFACTURER WHERE TWO OR MORE ITEMS OF THE SAME TYPE OF MATERIAL OR EQUIPMENT IS REQUIRED.
9. INSTALL ALL EQUIPMENT AND APPURTENANCES IN ACCORDANCE WITH MANUFACTURER'S RECOMMENDATIONS, CONTRACT DOCUMENTS, AND APPLICABLE CODES AND REGULATIONS. REFER TO DETAILS FOR ADDITIONAL PIPING AND EQUIPMENT INSTALLATION REQUIREMENTS.
10. LOCATE ALL TEMPERATURE, PRESSURE, AND FLOW MEASURING DEVICES IN ACCESSIBLE LOCATIONS WITH STRAIGHT SECTION OF PIPE UP- AND DOWNSTREAM AS RECOMMENDED BY THE MANUFACTURER TO ENSURE MANUFACTURER CERTIFIED ACCURACY.
11. COORDINATE ALL EQUIPMENT CONNECTIONS WITH MANUFACTURER'S CERTIFIED DRAWINGS. COORDINATE AND PROVIDE ALL PIPING TRANSITIONS REQUIRED FOR FINAL CONNECTIONS TO EQUIPMENT.
12. COORDINATE LOCATIONS AND SIZES OF ALL FLOOR, WALL, AND ROOF OPENINGS WITH ALL OTHER TRADES. COORDINATE ALL PIPING AND EQUIPMENT SUPPORTED FROM STRUCTURE WITH GENERAL CONSTRUCTION WORK.
13. COMPLETE ALL PRESSURE TESTS BEFORE ANY PLUMBING EQUIPMENT, OR PIPING INSULATION IS APPLIED.
14. MAKE ALL ATTACHMENTS TO JOISTS, TRUSSES, OR JOIST GIRDERS AT PANEL POINTS. PROVIDE BEAM CLAMPS MEETING MSS STANDARDS. THE USE OF C-CLAMPS IS NOT PERMITTED.
15. PROVIDE CONCRETE PADS A MINIMUM OF 4 INCHES HIGH FOR ALL FLOOR MOUNTED EQUIPMENT. EXTEND PAD 4 INCHES BEYOND THE EQUIPMENT ON ALL SIDES.
16. INSTALL PIPING, AND CONDUIT CONCEALED IN AREAS HAVING HUNG CEILINGS AND/OR FURRED SPACES UNLESS OTHERWISE INDICATED ON THE DRAWINGS.
17. REFER TO ARCHITECTURAL DRAWINGS FOR EXACT LOCATION OF ALL ACCESSIBLE FIXTURES. MOUNT ALL SUCH FIXTURES IN ACCORDANCE WITH THE REQUIREMENTS OF THE AUTHORITY HAVING JURISDICTION.
18. PROVIDE ACCESS DOORS IN WALLS, PARTITIONS, AND CEILINGS AS REQUIRED TO MAKE VALVES, WATER HAMMER ARRESTERS, ETC. READILY ACCESSIBLE.
19. ARRANGE FOR, COORDINATE, AND MAKE CONNECTION TO ALL SERVICES PROVIDED BY OTHERS. CONFORM TO ALL REQUIREMENTS APPLICABLE TO CONNECTIONS IMPOSED BY UTILITY COMPANIES AND AUTHORITIES HAVING JURISDICTION.
20. INSTALL FIXTURES AND EQUIPMENT WITH VALVES, UNIONS, ETC. TO ALLOW FOR EASE OF SERVICE AND/OR REMOVAL.
21. PROVIDE A CLEANOUT AT THE BASE OF WASTE AND VENT STACKS WITH FINISHED WALL PLATE IN FINISHED WALLS.
22. FURNISH AND INSTALL WATER PRESSURE REDUCING VALVE AND PRESSURE RELIEF VALVE IN ACCORDANCE WITH THE PLUMBING CODE OF NEW YORK STATE ON ALL INCOMING DOMESTIC WATER SYSTEMS IN EXCESS OF 80 P.S.I.G.
23. SLOPE ALL VENT PIPING TO DRAIN BACK TO THE DRAINAGE SYSTEM.
24. FLUSH AND DISINFECT ALL DOMESTIC POTABLE WATER PIPING AND TEST THE WATER IN ACCORDANCE WITH THE PLUMBING CODE OF NEW YORK STATE. PROVIDE CERTIFICATE OF PERFORMANCE AND LABORATORY TEST REPORT TO LOCAL AUTHORITIES HAVING JURISDICTION AND OBTAIN THEIR APPROVAL.
25. PROVIDE WATER HAMMER ARRESTORS AT ALL QUICK CLOSING FIXTURE VALVE LOCATIONS.
26. ALL PIPING, VALVES AND FITTINGS USED FOR POTABLE WATER SHALL BE NSF 61/372 COMPLIANT AND BE TESTED FOR LOW LEAD.
27. ANY PENETRATIONS THROUGH AIR BARRIER SHALL BE SEALED AS PER 2020 BCNYS AND COMMERCIAL PROVISIONS .
28. ALL PIPING IN PLENUM SPACES SHALL BE CAST IRON FOR SANITARY, STORM, VENT SYSTEMS, AND COPPER PIPING FOR DOMESTIC SYSTEMS, AND STEEL PIPING FOR GAS SYSTEMS. NO PLASTIC PIPING ALLOWED.
29. HOT WATER TEMPERATURE FOR ALL PUBLIC HAND WASHING FIXTURES SHALL BE TEMPERED TO A MAXIMUM TEMPERATURE OF 110 DEGREES F.
30. ALL FIXTURES SHALL MEET THE WATER CONSERVATION REQUIREMENTS LISTED IN THE TABLE 604.4 OF THE 2020 PLUMBING CODE OF NEW YORK STATE.
31. ALL FIXTURES THAT HAS THE ABILITY TO HAVE A HOSE CONNECTED TO IT, OR DIRECT CONNECTED FIXTURES, SHALL HAVE A BACKFLOW PREVENTION DEVICE ON THE FAUCET, VACUUM BREAKER (ASSE 1052 AND ASME A112.21.3).
32. ALL SANITARY FITTINGS SHALL BE 'WYE' TYPE AND SHALL FOLLOW THE DIRECTION OF FLOW.
33. IN THE EVENT THAT THERE IS A DISCREPANCY BETWEEN DESIGN PLANS, RISER DIAGRAMS, AND/OR SPECIFICATIONS CONCERNING PIPE SIZES, FIXTURES, AND/OR EQUIPMENT, THE MOST STRINGENT REQUIREMENTS SHALL BE APPLIED TO THE PROJECT.
34. FIRE STOP ALL OPENINGS IN FIRE RATED CONSTRUCTION FOR PIPING, CONDUIT, ETC.
35. MAINTAIN MAXIMUM HEADROOM AND SPACE CONDITIONS AT ALL POINTS. WHERE HEADROOM AND SPACE CONDITIONS APPEAR INADEQUATE, NOTIFY ARCHITECT PRIOR TO PROCEEDING WITH INSTALLATION. MAINTAIN A MINIMUM OF 6'-8" CLEARANCE FROM FINISHED FLOOR TO UNDERSIDE OF PIPES, CONDUITS, SUSPENDED EQUIPMENT, ETC., THROUGHOUT ACCESS ROUTES IN MECHANICAL ROOMS.
36. CORE DRILL ALL PENETRATIONS THROUGH CONCRETE FLOORS, WALLS, AND FOOTINGS.
37. INSTALL LINK SEAL TYPE PROTECTION FOR WATER RESISTANT SEALS AT ALL SLAB AND BELOW GROUND WALL FOOTING PENETRATIONS.
38. COVER ALL COPPER PIPING BELOW SLAB WITH "ARMAFLEX" TYPE INSULATION.

ENERGY NOTES

2020 ENERGY CONSERVATION CONSTRUCTION CODE OF NEW YORK STATE NOTES: STATEMENT OF COMPLIANCE:

TO THE BEST OF MY KNOWLEDGE, AND PERSONAL JUDGEMENT, THESE PLANS AND SPECIFICATIONS ARE IN COMPLIANCE WITH THE 2020 NEW YORK STATE ENERGY CONSERVATION CODE (ECCCNYS).

1. SERVICE WATER HEATING EQUIPMENT PERFORMANCE EFFICIENCY:
   - 1.1. WATER HEATING EQUIPMENT AND HOT WATER STORAGE TANKS SHALL MEET THE REQUIREMENTS OF TABLE C404.2 IN THE 2020 ECCCNYS. (ECCCNYS C404.2)
   - 1.2. SERVICE WATER HEATING SHALL BE COMMISSIONED AND COMPLETED IN ACCORDANCE WITH SECTION C408.2 OF THE 2020 ECCCNYS.
2. TEMPERATURE CONTROL:
   - 2.1. SERVICE WATER HEATING EQUIPMENT SHALL BE PROVIDED WITH CONTROLS ALLOWING A SETPOINT OF 110°F AND 90 °F FOR OTHER OCCUPANCIES. PUBLIC REST ROOM LAVATORIES SHALL HAVE A MAXIMUM OUTLET TEMPERATURE OF 110°F.
   - 2.2. WHERE WATER HEATING EQUIPMENT SERVING NONCIRCULATING SYSTEMS IS NOT SUPPLIED WITH INTEGRAL HEAT TRAPS, HEAT TRAPS SHALL BE PROVIDED ON THE SUPPLY AND DISCHARGE PIPING. (ECCCNYS C404.3)
3. PIPE INSULATION:
   - 3.1. AUTOMATIC CIRCULATING HOT WATER SYSTEM PIPING SHALL BE INSULATED WITH 1 INCH OF INSULATION WITH A CONDUCTIVITY NOT EXCEEDING 0.27 BTU PER INCH, OR THE INSULATION REQUIREMENTS, WHICHEVER IS GREATER. THE FIRST 8 FT OF PIPING IN NONCIRCULATING SYSTEMS WITH EQUIPMENT WITHOUT INTEGRAL HEAT TRAPS SHALL BE INSULATED WITH 0.5 INCH OF MATERIAL HAVING A CONDUCTIVITY NOT EXCEEDING 0.27 BTU PER INCH, OR THE INSULATION REQUIREMENTS, WHICHEVER IS GREATER. (ECCCNYS C404.5)
   - 3.2. ALL PIPING TO BE INSULATED WITH 0.21-0.28 CONDUCTIVITY
   - 3.3. COLD WATER PIPING - ALL SIZES - 1-INCH INSULATION, A.S. JACKET.
   - 3.4. STORM DRAINAGE PIPING ALL HORIZONTAL RUNS AND DRAIN BODY - MINIMUM 1-INCH INSULATION, A.S. JACKET.
   - 3.5. HOT WATER PIPING (140°F) AND TEMPERED WATER PIPING (110°F)
     - 3.5.1. PIPE SIZE: < 1" INSULATION: 1"
     - 3.5.2. PIPE SIZE: 1" TO < 1-1/2" INSULATION: 1"
     - 3.5.3. PIPE SIZE: 1-1/2 TO < 4" INSULATION: 1.5"
     - 3.5.4. PIPE SIZE: 4" TO < 8" INSULATION: 1.5"
4. HOT WATER SYSTEM CONTROLS:
   - 4.1. CIRCULATING HOT WATER SYSTEM PUMPS OR HEAT TRACE SHALL BE ARRANGED TO BE TURNED OFF EITHER AUTOMATICALLY OR MANUALLY WHEN THERE IS LIMITED HOT WATER DEMAND. READY ACCESS SHALL BE PROVIDED TO THE OPERATING CONTROLS. (ECCCNYS C404.6)
5. PIPE VOLUME AND MAXIMUM LENGTHS:
   - 5.1. PER SECTION OF C404.5.1 OF THE 2020 ECCCNYS, ALL MAXIMUM PIPE LENGTHS FROM FIXTURES SHALL COMPLY WITH THE MAXIMUM PIPE LENGTHS ON THE CHART BELOW. CONTRACTOR TO ENSURE HOT WATER RETURN PIPING IS INSTALLED AS PER PLANS AND THAT THESE LENGTHS ARE MAINTAINED.

NOMINAL PIPE SIZE (INCHES)	VOLUME (LIQUID OUNCES PER FOOT LENGTH)	MAXIMUM PIPING LENGTH (FEET)	
		PUBLIC LAVATORY FAUCETS	OTHER FIXTURES AND APPLIANCES
1/4"	0.33	6	50
5/16"	0.5	4	50
3/8"	0.75	3	50
1/2"	1.5	2	43
5/8"	2	1	32
3/4"	3	0.5	21
7/8"	4	0.5	16
1"	5	0.5	13
1-1/4"	8	0.5	8
1-1/2"	11	0.5	6
2" OR LARGER	18	0.5	4

FUEL GAS NOTES

1. PERFORM ALL WORK IN ACCORDANCE WITH NFPA 54 - NATIONAL FUEL GAS CODE, THE 2020 FUEL GAS CODE OF NEW YORK STATE (FGCNYS), 2015 NATIONAL GRID BLUE BOOK, 2018 CONEDISON YELLOW BOOK, 2017 PSEG NJ BOOK, AND THE REQUIREMENTS OF THE LOCAL AUTHORITIES HAVING JURISDICTION.
2. THE DEPTH OF COVER FOR ALL GAS SERVICE PIPING SHALL BE 24 INCHES.
3. THE WATER SERVICE SHALL BE KEPT A MINIMUM OF 10-FEET FROM THE INCOMING GAS SERVICE MEASURED IN ANY DIRECTION.
4. IF ELECTRIC AND GAS SHARE A COMMON TRENCH, THE TRENCH MUST BE WIDE ENOUGH TO MAINTAIN A 6-INCH MINIMUM SEPARATION DISTANCE.
5. LOCATION OF PROPOSED GAS METER ON CONTRACT DOCUMENTS ARE SUBJECT TO CHANGE BY THE LOCAL UTILITY COMPANY.
6. REFER TO THE LOCAL UTILITY COMPANY HANDBOOKS FOR METER RIG CONSTRUCTION DETAILS, RULES AND REGULATIONS. THIS INCLUDES, BUT NOT LIMITED TO LOCATION OF STEP DOWN REGULATORS, METER SIZE AND SET LENGTHS, VENTING OF REGULATORS, BYPASS PIPING, BOLLARD REQUIREMENTS, CONCRETE PAD, SUPPORTS, AND SHUT OFF VALVES.
7. GAS PIPING:
   - 7.1. INDOOR - STEEL PIPE- SCHEDULE 40 WITH WELDED OR THREADED JOINTS. THREADED JOINTS SHALL BE 150 POUND MALLEABLE IRON, FORGED STEEL, BLACK IRON, OR GALVANIZED STEEL.
   - 7.2. OUTDOOR - ABOVE GROUND - GALVANIZED PIPE OR PROPERLY COATED BLACK STEEL PIPE WITH SCREWED OR THREADED JOINTS.
   - 7.3. BELOW GRADE - STEEL PIPE- MILL WRAPPED SCHEDULE 40 WITH WELDED OR THREADED JOINTS.
   - 7.4. WELDED JOINTS MUST BE USED FOR GAS PIPING LARGER THAN 4-INCH.
8. GAS PIPING ENTERING A BUILDING SHALL BE ABOVE GRADE. PENETRATIONS THROUGH BURIED WALLS ARE NOT PERMITTED.
9. WHERE GAS PIPING IS INSTALLED BELOW GRADE INSIDE A BUILDING, THE GAS PIPING MUST BE INSTALLED IN A CONDUIT AND BE VENTED TO THE EXTERIOR.
10. GAS PRESSURE TEST:
    - 10.1. GALVANIZED OR BARE STEEL - UP TO 14" W.C. - AIR AT 3 PSIG FOR 30 MINUTES - AIR AT 15 PSIG FOR 1-HOUR (SED)
    - 10.2. GALVANIZED OR BARE STEEL - GREATER THAN 14" W.C. - AIR AT 50 PSIG FOR 30 MINUTES - AIR AT 1.5 TIMES THE WORKING PRESSURE FOR 1-HOUR (SED)
    - 10.3. COATED OR WRAPPED - LESS THAN 2-INCH - AIR AT 90 PSIG FOR 1-HOUR - ALL SIZES - AIR AT 100 PSIG FOR 1-HOUR (SED)
    - 10.4. COATED OR WRAPPED - 2-INCH TO 12-INCH - AIR AT 90 PSIG FOR 4-HOURS
11. SUPPLY ALL GAS-FIRED EQUIPMENT WITH GAS PIPING AS PER THE NEW YORK STATE FUEL GAS CODE. PROVIDE EACHPIECE OF EQUIPMENT WITH A DIRT LEG, UNION AND GAS COCK. PROVIDE A VENTED REGULATOR IF EQUIPMENT REQUIRES LOWER THAN LINE PRESSURE.
12. PROVIDE VEHICLE IMPACT PROTECTION FOR NEW METER HEADER. BOLLARDS SHALL BE SPACED NO MORE THAN 4-FEET BETWEEN POSTS ON CENTER AND LOCATED NOT LESS THAN 3-FEET FROM THE PROTECTED OBJECT.
13. SHUTOFF VALVES INSTALLED IN TUBING SYSTEMS MUST BE RIGIDLY AND SECURELY SUPPORTED INDEPENDENTLY OF THE TUBING.
14. ALL COOKING APPLIANCE CONNECTIONS MUST BE LISTED AND LABELED.

MANUAL GAS VALVE STANDARDS

VALVE STANDARDS	APPLIANCE SHUTOFF VALVE APPLICATION UP TO 1/2 PSIG PRESSURE	OTHER VALVE APPLICATIONS		
		UP TO 1/2 PSIG PRESSURE	UP TO 2 PSIG PRESSURE	UP TO 5 PSIG PRESSURE
ANSI Z21.15/CGA9.1	X	–	–	–
ASME B16.44	X	X*	X**	–
ASME B16.33	X	X	X	X

NOTES:
1. FOR SI: 1 POUND PER SQUARE INCH GAUGE = 6.895kPa.
2. X* IF LABELED 2G
3. X** IF LABELED 5G

APPLICABLE CODES

- 2020 BUILDING CODE NEW YORK STATE (BCNYS) 1ST PRINTING
- 2020 FIRE CODE NEW YORK STATE (FCNYS) 1ST PRINTING
- 2020 PLUMBING CODE NEW YORK STATE (PCNYS) 1ST PRINTING
- 2020 FUEL GAS CODE NEW YORK STATE (FGCNYS) 1ST PRINTING
- 2020 MECHANICAL CODE NEW YORK STATE (MCNYS) 1ST PRINTING
- 2020 ENERGY CONSERVATION CONSTRUCTION CODE OF NEW YORK STATE (ECCCNYS) 1ST PRINTING

SEISMIC BRACING NOTES

GENERAL

1. PIPES SHALL BE BRACED IN ACCORDANCE WITH THE NEW YORK STATE BUILDING CODE SECTION 1613, THE LATEST EDITION OF THE SMACNA SEISMIC RESTRAINT MANUAL FOR BUILDINGS WITH SEISMIC DESIGN CATEGORY C, D, AND E FOR FIRE SPRINKLER AND PLUMBING SYSTEMS WITH AN IMPORTANCE FACTOR GREATER THAN 1.0.
2. ALTERNATIVE DETAILS DIFFERING FROM THE LATEST EDITION OF THE SMACNA MANUAL MAY BE USED IF APPROVED BY THE STRUCTURAL ENGINEER ON RECORD.
3. IN-LINE EQUIPMENT SHALL BE BRACED INDEPENDENTLY OF THE PIPES. REFER TO THE SEISMIC DETAILS AND SCHEDULES ON THE CONTRACT DOCUMENTS.
4. COLD-FORMED ANGLES SHALL CONFORM TO THE AISI "SPECIFICATIONS FOR THE DESIGN OF COLD-FORMED STEEL STRUCTURAL MEMBERS" WITH A MINIMUM FY OF 33 PSI.
5. HOT-ROLLED SHAPES AND PLATES SHALL CONFORM TO ASTM A36. PIPES USED AS BRACES SHALL BE STANDARD STEEL PIPES PER ASTM A500-A OR A-53.
6. PIPE HANGERS SHALL BE POSITIVELY ATTACHED TO THE SUPPORTING STRUCTURE ABOVE. THE USE OF C-CLAMPS OR OTHER FRICTION-TYPE ANCHORS TO HANG PIPE IS PROHIBITED IN SEISMIC REGIONS. FRICTION-TYPE ANCHORS SUCH AS C-CLAMPS WITH PROPERLY ATTACHED RETAINING STRAPS MAY BE USED IF APPROVED BY THE STRUCTURAL ENGINEER OF RECORD.
7. REFER TO THE STRUCTURAL DRAWINGS FOR ACCEPTABLE EXPANSION ANCHOR TYPES AND TEST LOADS AS REQUIRED.
8. APPROPRIATE EXPANSION/CONTRACTION CAPABILITIES SHALL BE PROVIDED IN PIPES WHICH CROSS BUILDING EXPANSION JOINTS. THE TOTAL RELATIVE MOVEMENT IN ANY HORIZONTAL DIRECTION ON EACH SIDE OF THE JOINT SHALL BE EQUAL TO THE SIZE OF THE BUILDING JOINT.
9. REQUIREMENTS FOR BRACING OF PIPES:
   - 9.1. BRACING, DETAILS, SCHEDULES AND NOTES APPLY TO ALL TYPES OF PIPES.
   - 9.2. BRACE PIPING AS DESCRIBED.
     - 9.2.1. FUEL-OIL, FUEL GAS, AND COMPRESSED AIR PIPING THAT IS NOMINAL 1-INCH OR LARGER.
     - 9.2.2. PIPING LOCATED IN BOILER ROOMS, MECHANICAL EQUIPMENT ROOMS THAT IS NOMINAL 2-INCH OR LARGER.
     - 9.2.3. ALL OTHER PLUMBING AND SPRINKLER PIPING LARGER THAN NOMINAL 2-INCH.
     - 9.2.4. PIPING SUSPENDED BY INDIVIDUAL HANGERS 12-INCH OR LESS IN LENGTH, AS MEASURED FROM THE TOP OF THE PIPE AND THE BOTTOM OF THE SUPPORT WHERE THE HANGER IS ATTACHED, NEED NOT BE BRACED. HOWEVER, HANGERS FOR PIPING, REGARDLESS OF SIZE, SHALL BE POSITIVELY ATTACHED TO THE SUPPORTING STRUCTURE ABOVE. FRICTION-TYPE ANCHORS SUCH AS C-CLAMPS SHALL NOT BE PERMITTED TO SUPPORT PIPE.
10. TRANSVERSE BRACING SHALL BE AT 40-FEET MAXIMUM, EXCEPT WHERE A LESSER SPACING IS INDICATED IN THE TABLES FOR BRACING OF PIPES.
11. LONGITUDINAL BRACING SHALL BE AT 80-FEET MAXIMUM EXCEPT WHERE THE LESSER SPACING IS INDICATED IN THE TABLES, IN PIPES WHERE THERMAL EXPANSION IS A CONSIDERATION, AN ANCHOR POINT MAY BE USED AS THE SPECIFIED LONGITUDINAL BRACE PROVIDED IT HAS A CAPACITY EQUAL TO OR GREATER THAN LONGITUDINAL BRACE. THE LONGITUDINAL BRACES AND CONNECTIONS MUST BE CAPABLE OF RESISTING THE ADDITIONAL FORCE INDUCED BY EXPANSION AND CONTRACTION.
12. FOR FUEL OIL AND GAS PIPING, THE BRACING DETAILS, SCHEDULES, AND NOTES MAY BE USED, EXCEPT THAT TRANSVERSE BRACING SHALL BE AT 20-FEET MAXIMUM AND LONGITUDINAL BRACING SHALL BE AT 40-FEET MAXIMUM.
13. TRANSVERSE BRACING FOR ONE PIPE SECTION MAY ALSO ACT AS LONGITUDINAL BRACING FOR A PIPE SECTION OF THE SAME SIZE AND CONNECTED PERPENDICULAR TO IT IF THE BRACING IS INSTALLED WITHIN 24-INCHES OF THE ELBOW OR THE TEE. SEE CHAPTER 4 OF THE SMACNA SEISMIC RESTRAINT MANUAL FOR TYPICAL LOCATIONS OF BRACING.
14. SEISMIC BRACES FOR PIPES ON TRAPEZE HANGERS MAY BE USED.
15. PROVIDE FLEXIBILITY IN JOINTS WHERE PIPES PASS THROUGH BUILDING EXPANSION JOINTS OR WHERE RIGIDLY SUPPORTED PIPES CONNECT TO EQUIPMENT WITH VIBRATION ISOLATORS.
16. BRANCH LINES SHALL NOT BE USED TO BRACE MAIN LINES.
17. A RIGID PIPING SYSTEM SHALL NOR BE BRACED TO DISSIMILAR PARTS OF THE BUILDING OR TO TWO DISSIMILAR BUILDING SYSTEMS THAT MAY RESPOND DIFFERENTLY DURING AN EARTHQUAKE.
18. CAST-IRON PIPE OF ALL TYPES, GLASS PIPE, AND OTHER PIPE JOINED WITH A SHIELD AND CLAMP ASSEMBLY, WHERE THE TOP OF THE PIPE IS 12-INCHES OR MORE FROM THE SUPPORTING STRUCTURE, SHALL BE BRACED ON EACH SIDE OF A CHANGE IN DIRECTION OF 90-DEGREES OR MORE.
19. RISER JOINTS SHALL BE BRACED OR STABILIZED BETWEEN FLOORS,
20. VERTICAL RISERS SHALL BE LATERALLY SUPPORTED WITH A RISER CLAMP AT EACH FLOOR.
21. FOR RISERS IN HUBLESS PIPING SYSTEMS WHERE THE RISER JOINTS ARE UNSUPPORTED BETWEEN FLOORS. SEE CHAPTER 9 OF THE SMACNA SEISMIC RESTRAINT MANUAL FOR RISER BRACING DETAILS.
22. THE SPACING OF VERTICAL SUPPORTS AND LATERAL BRACING, AND THE DETAILS OF THE VERTAIL SUPPORTS FOR THE FIRE-SPRINKLER SYSTEM SHALL COMPLY WITH NFPA 13, CHAPTER 9.

EQUIPMENT REQUIREMENTS

1. CONTRACTOR SHALL SUBMIT A CERTIFICATE OF COMPLIANCE FROM EACH EQUIPMENT MANUFACTURER STATING THAT EQUIPMENT WITH AN OPERATING WEIGHT OVER 400 POUNDS THAT ARE FLOOR OR ROOF MOUNTED, 20 POUNDS OR GREATER FOR SUSPENDED OR WALL MOUNTED EQUIPMENT, OR EQUIPMENT THAT MUST REMAIN OPERATIONAL DURING AN EARTHQUAKE, WILL WITHSTAND THE SEISMIC DESIGN PROVISIONS OF THE 2020 INTERNATIONAL BUILDING CODE.
2. EQUIPMENT TO REMAIN OPERATIONS SHALL INCLUDE BUT NOT LIMITED TO:
   - 2.1. LIFE SAFETY SYSTEMS AND EQUIPMENT
   - 2.2. EMERGENCY AND STANDBY SYSTEMS
   - 2.3. MEDICAL GAS SYSTEMS, EQUIPMENT AND STORAGE
   - 2.4. EQUIPMENT UTILIZING FUEL-OIL AND FUEL-GAS
   - 2.5. EQUIPMENT CONVEYING HAZARDOUS MATERIALS
   - 2.6. ALL PLUMBING EQUIPMENT SERVICING PATIENT OR CLINICAL CARE AREAS
3. WHERE SEISMIC CALCULATIONS ARE REQUIRED FOR EQUIPMENT SUBMITTALS, THESE SHALL BE PERFORMED BY A REGISTERED STRUCTURAL ENGINEER IN THE STATE OF NEW YORK, WHO SHALL SIGN AND SEAL THESE CALCULATIONS. CALCULATIONS SHALL UTILIZE SEISMIC DESIGN FORCES AS FOUND IN THE 2020 INTERNATIONAL BUILDING CODE.
4. OTHER FLOOR OR PAD MOUNTED EQUIPMENT WITHOUT VIBRATION ISOLATORS SHALL BE BOLTED TO THE SLAB WITH 3/8-INCH DIAMETER EXPANSION BOLTS. SEE STRUCTURAL DRAWINGS FOR MORE DETAIL ON TYPE OF BOLT AND SPACING REQUIREMENTS.
5. VIBRATION ISOLATORS AND THE ANCHORAGE OF THESE ASSEMBLIES FOR FLOOR OR ROOF MOUNTED OR SUSPENDED EQUIPMENT SHALL BE DESIGNED FOR THE APPROPRIATE SEISMIC FORCES PER THE 2020 INTERNATIONAL BUILDING CODE.

H2M architects + engineers

538 Broad Hollow Road, 4th Floor East
Melville, NY 11747
631.756.8000 • www.h2m.com
NY Architecture & Landscape Architecture: No Certificate Required
NY Engineering Certificate of Authorization No.: 0018178

CONSULTANTS:

MARK	DATE	DESCRIPTION

STATE OF NEW YORK · JONATHAN RICHARD MURATORE · 096440-1 · LICENSED PROFESSIONAL ENGINEER

10/31/2027
Exp Date

JONATHAN R. MURATORE, P.E.
NY PROFESSIONAL ENGINEER Lic. No. 096440

"IN ACCORDANCE WITH ARTICLE 145, SECTION 7209 OF THE NYS EDUCATION LAW, ALTERATION OF THIS DOCUMENT EXCEPT BY A LICENSED PROFESSIONAL IS ILLEGAL"

DESIGNED BY:	DRAWN BY:	CHECKED BY:	REVIEWED BY:
CRG	MPF/CRG	JRM	JRM

PROJECT No:	DATE:	SCALE:
TRFD 2302	FEBRUARY 2025	AS SHOWN

CLIENT

THIELLS ROSEVILLE FIRE DISTRICT

NEW 26-100 FIRE HEADQUARTERS

THIELLS 26 FD

65 W RAMAPO ROAD GARNERVILLE, NY 10923

CONTRACT

CONTRACT P PLUMBING CONSTRUCTION

STATUS

FINAL BID DOCUMENT

SHEET TITLE

PLUMBING NOTES, LEGEND, ABBREVIATIONS AND SCHEDULES

DRAWING No.

P 001.00

C:\Users\mellman\Documents_Revit Backup\TRFD2302_Central25-M_mellmanZ42X2.rvt

2/25/2025 4:10:54 PM

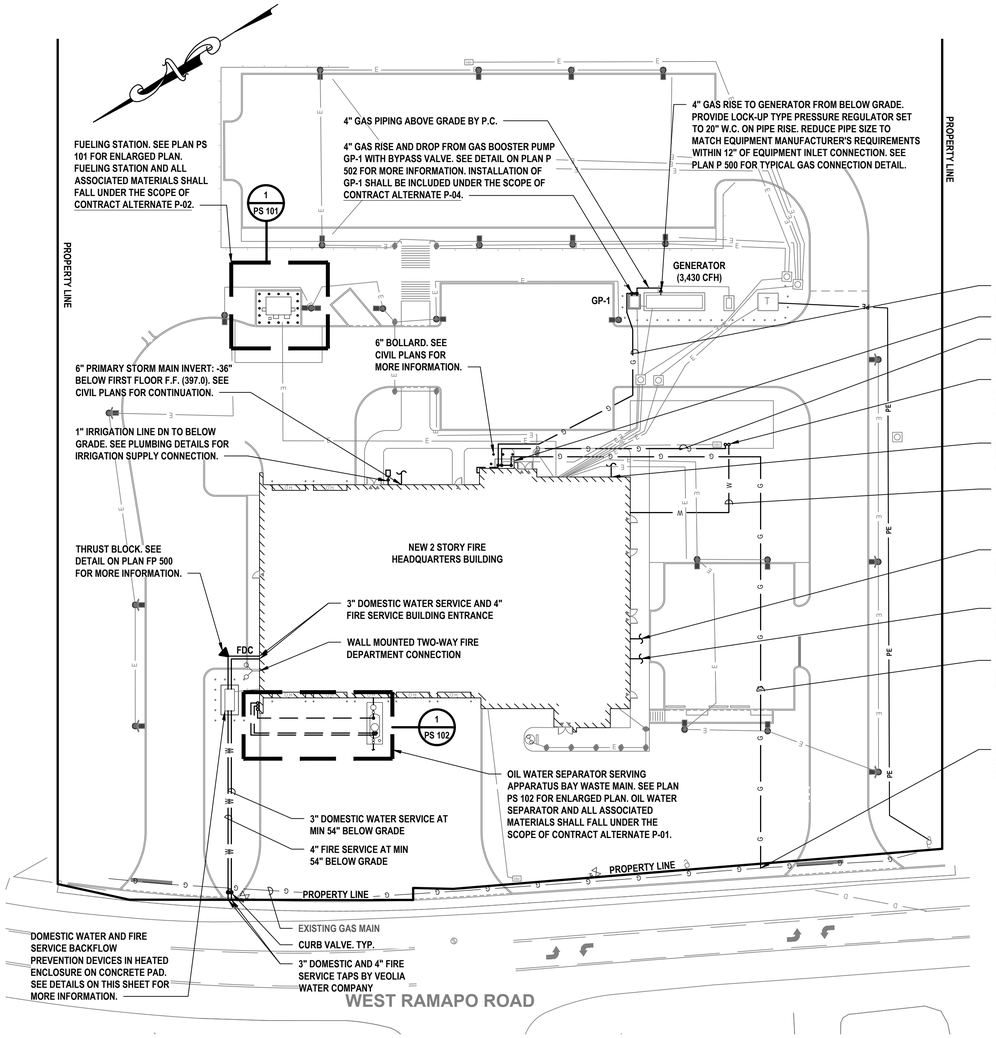

1 Plumbing Site Plan

SCALE: 1" = 30'

GRAPHIC SCALE

30 0 15 30

(IN FEET)
1 inch = 30 ft.

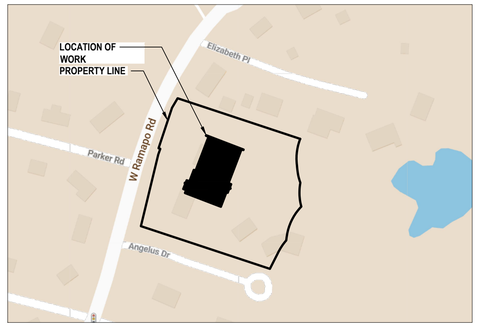

2 Key Map

SCALE: N.T.S.

DOMESTIC WATER AND FIRE SERVICE BACKFLOW PREVENTION NOTES:

1. INSTALLATION SHALL BE IN ACCORDANCE WITH ALL APPLICABLE COUNTY DEPARTMENT OF HEALTH SERVICES, NEW YORK STATE HEALTH DEPARTMENT REGULATIONS, AND VEOLIA WATER COMPANY REGULATIONS.
2. ALL CONNECTIONS ON THE WATER SERVICE SHALL BE DOWNSTREAM FROM THE BACKFLOW PREVENTION DEVICE. BYPASSING OF A BACKFLOW PREVENTION DEVICE IS A VIOLATION OF NEW YORK STATE HEALTH DEPARTMENT RULES AND REGULATIONS.
3. THE CONTRACTOR SHALL ENGAGE A CERTIFIED BACKFLOW PREVENTION DEVICE TESTER TO TEST THE BACKFLOW PREVENTION DEVICE AFTER INSTALLATION. IT IS THE OWNER'S RESPONSIBILITY TO HAVE EACH DEVICE CERTIFIED AT LEAST ANNUALLY WITH RESULTS REPORTED TO VEOLIA WATER COMPANY AND TO THE COUNTY DEPARTMENT OF HEALTH. CONTRACTOR SHALL BE RESPONSIBLE FOR ALL RELATED TESTING AND APPLICATION FEES.
4. SHUT-OFF VALVES ON DOMESTIC WATER SERVICE BFP DEVICE SHALL BE NRS TYPE GATE VALVES AND SHALL BE SAME MANUFACTURER AS BFP DEVICE.
5. SHUT-OFF VALVES ON FIRE SERVICE BFP DEVICE SHALL BE OS&Y TYPE GATE VALVES AND SHALL BE SAME MANUFACTURER AS BFP DEVICE.
6. TEST COCKS ON THE BFP DEVICE SHALL BE POSITIONED TO FACILITATE TESTING WITH 30" MINIMUM CLEARANCE.
7. BACKFLOW DEVICES MAY NOT BE MODIFIED IN ANY WAY DURING INSTALLATION.
8. 3" DOMESTIC WATER SERVICE SHALL BE TYPE K COPPER AND 4" FIRE SERVICE SHALL BE DUCTILE IRON.
9. ALL WATER SERVICES TO HAVE A MINIMUM OF 54" OF COVER.
10. PIPING SHALL BE UN-BRANCHED AND UNRESTRICTED FROM THE SUPPLY MAIN TO THE DEVICE, EXCEPT FOR THE METER.
11. CONTRACTOR SHALL PROVIDE APPROPRIATE FLOOR/WALL SUPPORTS FOR ALL DEVICES AND PIPING. ALL SUPPORTS/HANGERS/CLAMPS SHALL BE GALVANIZED STEEL.
12. BACKFLOW DEVICES SHALL BE APPROVED BY THE UNIVERSITY OF SOUTHERN CALIFORNIA FOUNDATION FOR CROSS CONNECTION CONTROL AND HYDRAULIC RESEARCH.
13. DEVICE MAY NOT BE INSTALLED HIGHER THAN 5'-0" ABOVE THE FLOOR OR A FIXED PLATFORM IS REQUIRED.
14. WATER SERVICE LINES TO MAINTAIN A MINIMUM CLEARANCE OF 10'-0" FROM GAS SERVICE, SEWER LINES, ELECTRICAL SERVICE, DRAINAGE LINES, UTILITY POLES, TREES, ETC.

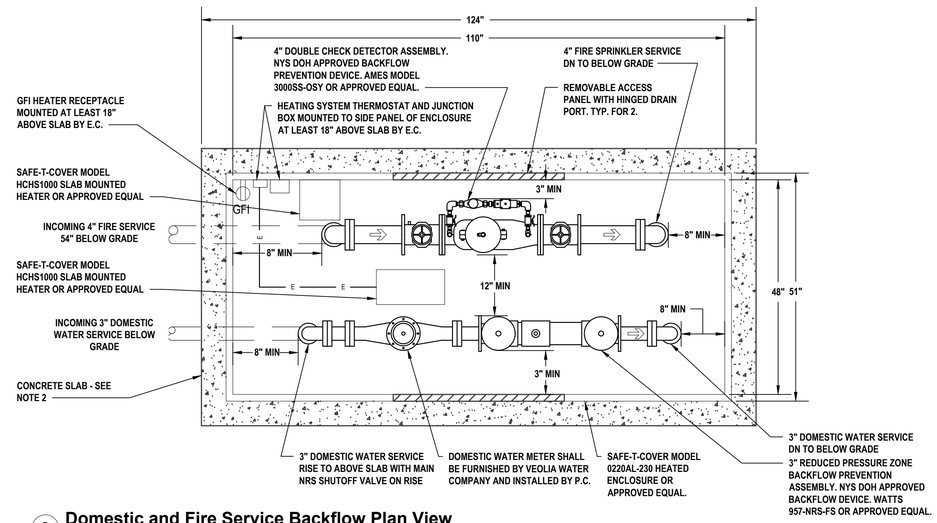

3 Domestic and Fire Service Backflow Plan View

SCALE: 3/4"=1'-0"

NOTES:

1. ALL DIMENSIONS ARE IN INCHES.
2. RECOMMENDED SLAB SIZE: 62"W X 124"L X 6" THICKNESS (3,500 PSI W/ REINFORCING).
3. GFI RECEPTACLE SHALL BE MOUNTED A MINIMUM OF 18" ABOVE THE SLAB. CONTRACT "E" SHALL PROVIDE ALL POWER WIRING TO RECEPTACLE AND HEATER.
4. THE ENCLOSURE SHALL USE A SINGLE, 2,000W, 240V, SINGLE PHASE SLAB MOUNT HEATER. THE HEATER SHALL BE PROVIDED WITH A 208V, SINGLE PHASE POWER FEED AND SHALL PROVIDE A DERATED POWER OUTPUT OF 1,500W.
5. A POWER INDICATING LIGHT SHALL BE INSTALLED ON THE OUTSIDE OF THE HEATED ENCLOSURE.

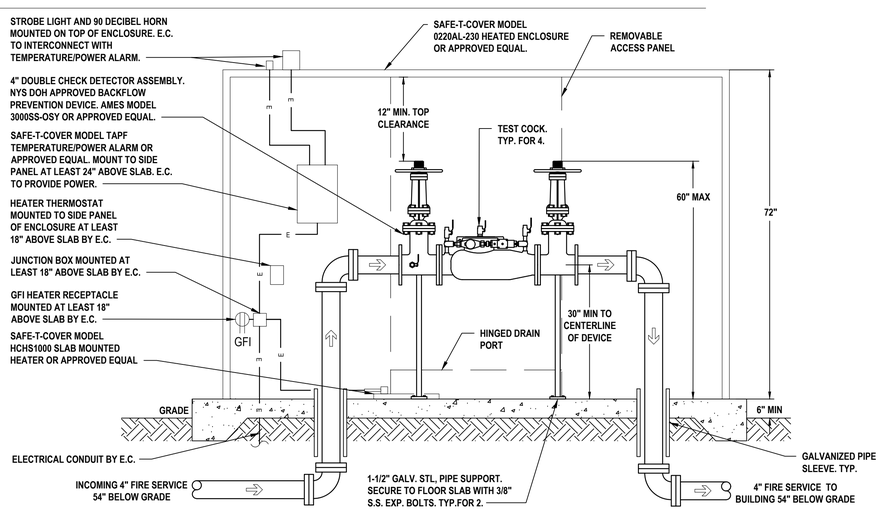

4 Fire Service Backflow Prevention Detail

SCALE: 3/4"=1'-0"

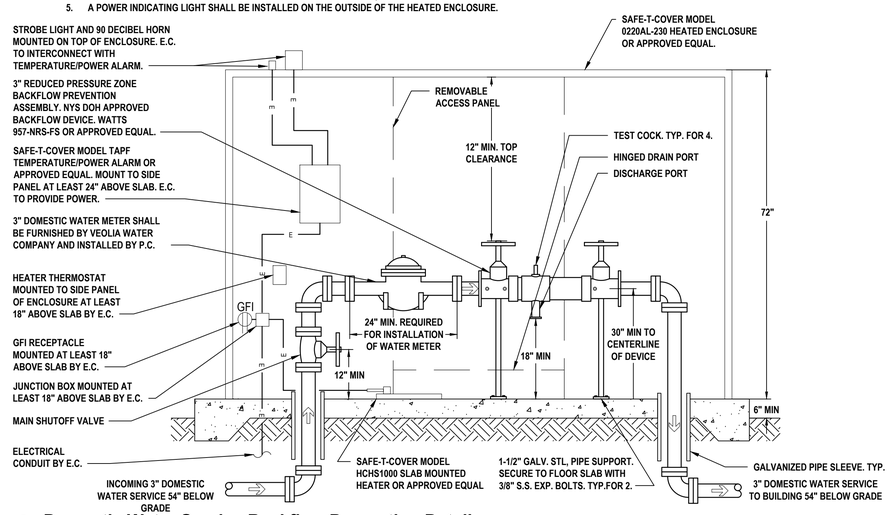

5 Domestic Water Service Backflow Prevention Detail

SCALE: 3/4"=1'-0"

H2M architects + engineers

538 Broad Hollow Road, 4th Floor East
Melville, NY 11747
631.756.8000 • www.h2m.com
NY Architecture & Landscape Architecture: No Certificate Required
NY Engineering Certificate of Authorization No. 0018178

CONSULTANTS:

MARK	DATE	DESCRIPTION

STATE OF NEW YORK · JONATHAN RICHARD MURATORE · 096440-1 · LICENSED PROFESSIONAL ENGINEER

10/31/2027
EXP. DATE

JONATHAN R. MURATORE, P.E.
NY PROFESSIONAL ENGINEER Lic. No. 096440

"IN ACCORDANCE WITH ARTICLE 145, SECTION 7209 OF THE NYS EDUCATION LAW, ALTERATION OF THIS DOCUMENT EXCEPT BY LICENSE PROFESSIONAL IS ILLEGAL"

DESIGNED BY:	DRAWN BY:	CHECKED BY:	REVIEWED BY:
CRG	MPF/CRG	JRM	JRM

PROJECT No.: DATE: SCALE:

CLIENT

THIELLS ROSEVILLE FIRE DISTRICT

NEW 26-100 FIRE HEADQUARTERS

THIELLS 26 FD

65 W RAMAPO RD
GARNERVILLE, NY 10923

CONTRACT

CONTRACT P
PLUMBING CONTRACT

STATUS

FINAL BID DOCUMENT

SHEET TITLE

PLUMBING SITE PLAN

DRAWING No.

PS 100.00

811 1-800-962-7962
Dig Safely. New York
Call811
before you dig
www.digsafelynewyork.com

X:\TRFD (Thiells Roseville Fire District)\TRF02302 (New Fire Station)\02-BIM-CADD\Civil\Dwg\12-Plumbing\PS 100.00 - Plumbing Site Plan.dwg Last Modified: Feb 25, 2025 - 4:14pm Plotted on: Feb 25, 2025 - 4:15pm By mfellman

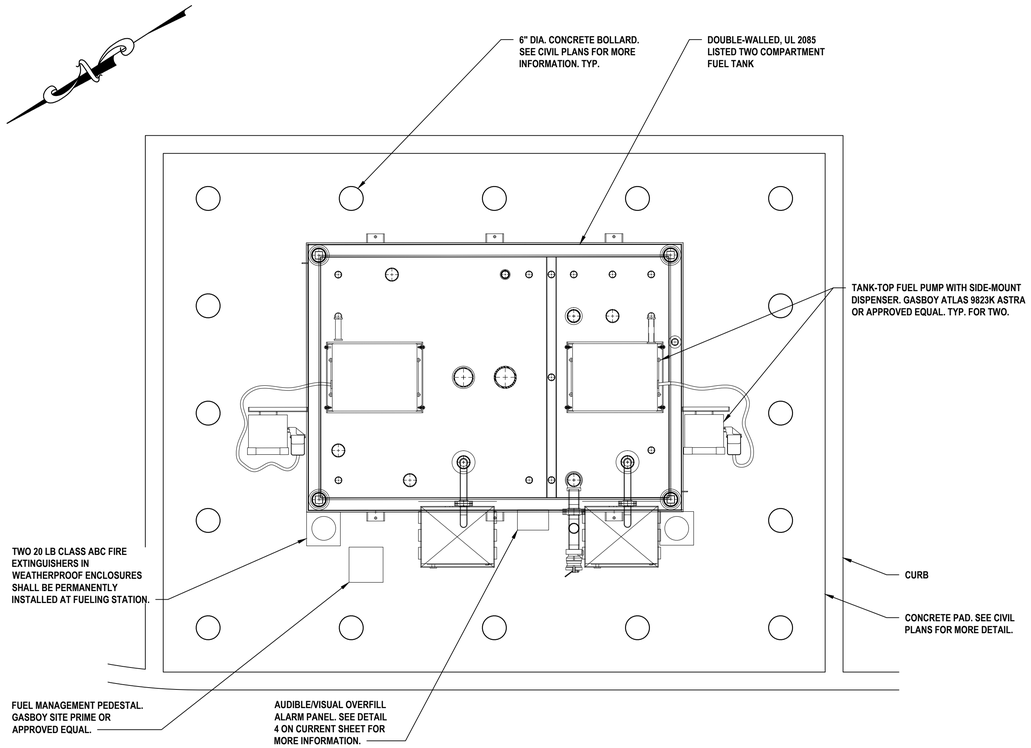

1 Enlarged Fueling Station Plan

SCALE: 1/2"=1'-0"

WARNING

1. NO SMOKING.
2. SHUT OFF MOTOR.
3. DISCHARGE YOUR STATIC ELECTRICITY BEFORE FUELING BY TOUCHING A METAL SURFACE AWAY FROM THE NOZZLE.
4. TO PREVENT STATIC CHARGE, DO NOT REENTER YOUR VEHICLE WHILE GASOLINE IS PUMPING.
5. IF A FIRE STARTS, DO NOT REMOVE NOZZLE - BACK AWAY IMMEDIATELY.
6. IT IS UNLAWFUL AND DANGEROUS TO DISPENSE GASOLINE INTO UNAPPROVED CONTAINERS.
7. NO FILLING OF PORTABLE CONTAINERS IN OR ON A MOTOR VEHICLE.

PLACE CONTAINER ON GROUND BEFORE FILLING.

NOTES:

1. SIGNS SHALL BE OF DURABLE MATERIAL.
2. POST SIGNS AT DISPENSER.

IN CASE OF FIRE, SPILL OR RELEASE:

1. USE EMERGENCY PUMP SHUT-OFF.
2. REPORT THE ACCIDENT!

FIRE DEPARTMENT TELEPHONE NO. (XXX) XXX-XXXX

NEW YORK STATE
DEPARTMENT OF ENVIRONMENTAL CONSERVATION
SPILL HOTLINE NO. (800) 457-7362

FACILITY ADDRESS: 65 W RAMAPO ROAD
GARNERVILLE, NY 10923

2 NYS Fire Code Signage

SCALE: NTS

NOTES:

1. SIGNS SHALL BE OF DURABLE MATERIAL.
2. SIGN 'A' - "DANGER" SHALL BE WHITE LETTERING ON A RED BACKGROUND. ALL LETTERS SHALL NOT BE LESS THAN 3" IN HEIGHT AND 1/2" IN STROKE.
3. SIGN 'B' - "DANGER" AND HAZCOM "FLAMMABLE" SIGNS SHALL BE PERMANENTLY AFFIXED TO OR NEAR DISPENSER AT CLEARLY VISIBLE LOCATIONS.
4. SIGN 'C' - "CAUTION" SIGN SHALL BE PERMANENTLY AFFIXED IN A CLEARLY VISIBLE LOCATION ABOVE OR BELOW THE OVERFILL ALARM PANEL.
5. SIGN 'D' - "EMERGENCY SHUT-OFF" SIGN SHALL BE PERMANENTLY AFFIXED IN A CLEARLY VISIBLE LOCATION AT OR NEAR EMERGENCY KILL SWITCH(ES).

3 HazCom Signage

SCALE: NTS

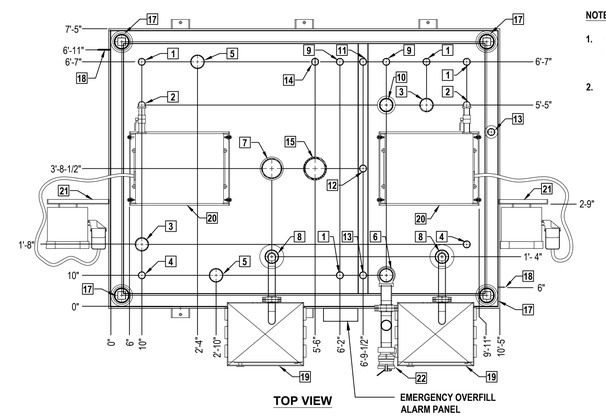

NOTES:

1. LEVEL SENSOR SHALL BE OF PROPER LENGTH TO SIGNAL A HIGH LEVEL ALARM (WARNING THAT THE TANK HAS REACHED THE MAX FILL LEVEL) AT 90% TANK CAPACITY.
2. CONTRACTOR SHALL BE RESPONSIBLE TO OBTAIN ALL REQUIRED TANK INSTALLATION PERMITS WITH ROCKLAND COUNTY DOH, NYS DOH, AND THE AUTHORITY HAVING JURISDICTION. CONTRACTOR SHALL BE RESPONSIBLE TO PAY ALL REQUIRED PERMITTING FEES.

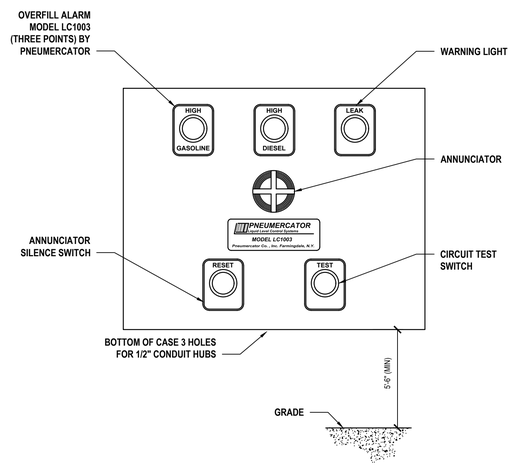

4 Audible / Visual Overfill Alarm

SCALE: NTS

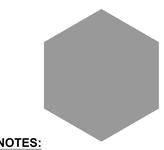

NOTES:

1. FILL PORT MARKING SYMBOL SHALL BE A SOLID YELLOW HEXAGON.

DIESEL		
Tank ID #:	---	
This tank conforms with 6 NYCRR Part 613		
This tank is manufactured to UL-2085 Standard		
Manf. Date:	MM-YYYY	
Tank Width:	6 ft. - 9 in.	
Tank Length:	6 ft. - 4 in.	
Nominal Capacity:	1,500	gallons
Design Capacity:	1,350	gallons
Working Capacity:	---	gallons
Model No.:	---	
Manufacturer:	---	
Intalled Date/By:	---	
Serial No.:	---	

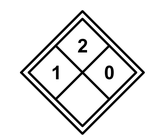

NOTES:

1. LABEL SHALL BE OF DURABLE MATERIAL.
2. LABEL SHALL BE PERMANENTLY AFFIXED INSIDE FILL PORT (WITH 18-INCH STAINLESS STEEL CHAIN) AND AT TANK MONITORING PANEL.

NOTES:

1. NFPA DIAMOND SIGN SHALL BE OF DURABLE MATERIAL.
2. SIGN SHALL BE PERMANENTLY AFFIXED TO GASOLINE DISPENSER AT A CLEARLY VISIBLE LOCATION.

5 Diesel Fuel Signage

SCALE: NTS

BILL OF MATERIALS		
ITEM NO.	SIZE	DESCRIPTION
1	2"	SPARE
2	2"	SUCTION PUMP
3	4"	ELECTRONIC LEVEL SENSOR - PNEUMERCATOR MP450S WITH PK4-RM PROBE RISER KIT OR APPROVED EQUAL
4	2"	MECHANICAL GAUGE
5	4"	SPARE
6	4"	PHASE 1 VAPOR RECOVERY INLET CONNECTION
7	6"	PRIMARY DIESEL TANK EMERGENCY VENT
8	4"	4" FILL PIPE WITH OVERFILL PREVENTION VALVE SET AT 95% TANK CAPACITY
9	2"	PRIMARY TANK WORKING VENT
10	4"	PRIMARY GASOLINE TANK EMERGENCY VENT
11	2"	INTERSTITIAL SPARE
12	2"	INTERSTITIAL MUSHROOM VENT
13	2"	PRODUCT DISTINGUISHING LEAK SENSOR WITH FAULT DETECTION - PNEUMERCATOR MODEL ES825-200 WITH MODEL SK2-RM5 SENSOR CAP KIT OR APPROVED EQUAL.
14	2"	SECONDARY WORKING VENT
15	6"	SECONDARY CONTAINMENT EMERGENCY VENT
16	-	-
17	4"	FIRE RATED MATERIAL FILL
18	2" X 2" X 1/4"	GROUND CLIP
19	25" X 21" X 29"	MORRISON 2QBB REMOTE FILL BOX
20	24" X 33" X 5"	TOP MOUNT TANK PUMP, WITH HOUSING AND SUPPORT BRACKET. GASBOY MODEL 9820K OR APPROVED EQUAL.
21	20"/16" X 1" X 15"	FUEL DISPENSER WITH BRACKET. GASBOY MODEL 9820K OR APPROVED EQUAL.
22	3"	PHASE 1 VAPOR RECOVERY PIPING

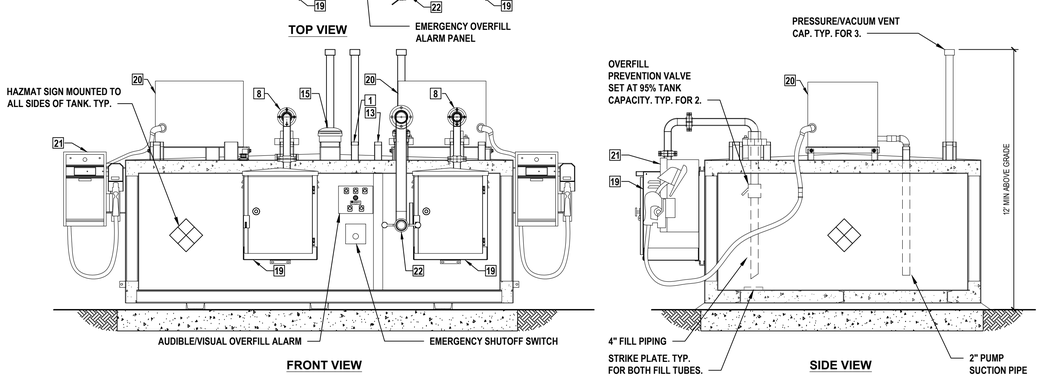

6 Fuel Storage Tank Details

SCALE: N.T.S.

NOTES:

1. FILL PORT MARKING SYMBOL SHALL BE A SOLID WHITE CIRCLE WITH BLACK CROSS.
2. VAPOR RECOVERY PORT MARKING SYMBOL SHALL BE A SOLID ORANGE CIRCLE.

GASOLINE		
Tank ID #:	---	
This tank conforms with 6 NYCRR Part 613		
This tank is manufactured to UL-2085 Standard		
Manf. Date:	MM-YYYY	
Tank Width:	6 ft. - 9 in.	
Tank Length:	3 ft. - 2 in.	
Nominal Capacity:	500	gallons
Design Capacity:	450	gallons
Working Capacity:	---	gallons
Model No.:	---	
Manufacturer:	---	
Intalled Date/By:	---	
Serial No.:	---	

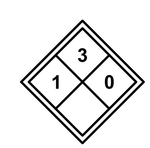

NOTES:

1. LABEL SHALL BE OF DURABLE MATERIAL.
2. LABEL SHALL BE PERMANENTLY AFFIXED INSIDE FILL PORT (WITH 18-INCH STAINLESS STEEL CHAIN) AND AT TANK MONITORING PANEL.

NOTES:

1. NFPA DIAMOND SIGN SHALL BE OF DURABLE MATERIAL.
2. SIGN SHALL BE PERMANENTLY AFFIXED TO GASOLINE DISPENSER AT A CLEARLY VISIBLE LOCATION.

7 Gasoline Signage

SCALE: NTS

H2M architects + engineers

538 Broad Hollow Road, 4th Floor East
Melville, NY 11747
631.756.8000 • www.h2m.com
NY Architecture & Landscape Architecture: No Certificate Required
NY Engineering Certificate of Authorization No. 0018178

CONSULTANTS:

MARK	DATE	DESCRIPTION

STATE OF NEW YORK · JONATHAN RICHARD MURATORE · 096440-1 · LICENSED PROFESSIONAL ENGINEER

10/31/2027
JONATHAN R. MURATORE, P.E.
EXP. DATE
NY PROFESSIONAL ENGINEER Lic. No. 096440
"IN ACCORDANCE WITH ARTICLE 145, SECTION 7209 OF THE NYS EDUCATION LAW, ALTERATION OF THIS DOCUMENT EXCEPT BY LICENSE PROFESSIONAL IS ILLEGAL"

DESIGNED BY:	DRAWN BY:	CHECKED BY:	REVIEWED BY:
CRG	CRG	JRM	JRM
PROJECT No.: TRFD 2302	DATE: FEBRUARY 2025	SCALE: AS SHOWN	

CLIENT

THIELLS ROSEVILLE FIRE DISTRICT

NEW 26-100 FIRE HEADQUARTERS

THIELLS 26 FD

65 W RAMAPO RD
GARNERVILLE, NY 10923

CONTRACT

CONTRACT P
PLUMBING CONTRACT

STATUS

FINAL BID DOCUMENT

SHEET TITLE

ENLARGED FUELING STATION PLAN AND DETAILS

DRAWING No.

PS 101.00

X:\TRFD\Thiells Roseville Fire District\TRF02302\New Fire Station\02.BIM-CAD\Con-Docs\12-Plumbing\PS 101.00 - Enlarged Fueling Island.dwg Last Modified: Feb 13, 2025 - 5:24pm Plotted on: Feb 25, 2025 - 4:15pm By mfellman

OIL WATER SEPARATOR NOTES:

1. OIL/WATER SEPARATOR WAS SIZED IN ACCORDANCE WITH 2020 PLUMBING CODE OF NYS, SECTION 1003.4.2. SIZING CALCULATIONS ARE INDICATED BELOW:

- TOTAL DRAINAGE AREA = 6,311.11 SQ FT
- (100 SQ FT X 6 CU FT/100 SQ FT) + (6,211.11 SQ FT X 1 CU FT/100 SQ FT) = 68.11 CU FT
- 68.11 CU FT X 7.48 GAL/CU FT = 509.5 GALLONS REQUIRED
- OIL WATER SEPARATOR VOLUME = 550 GALLONS.

2. CONTRACTOR SHALL BE RESPONSIBLE TO OBTAIN ALL REQUIRED TANK INSTALLATION PERMITS WITH ROCKLAND COUNTY DOH, NYS DOH, AND THE AUTHORITY HAVING JURISDICTION. CONTRACTOR SHALL BE RESPONSIBLE TO PAY ALL REQUIRED PERMITTING FEES.

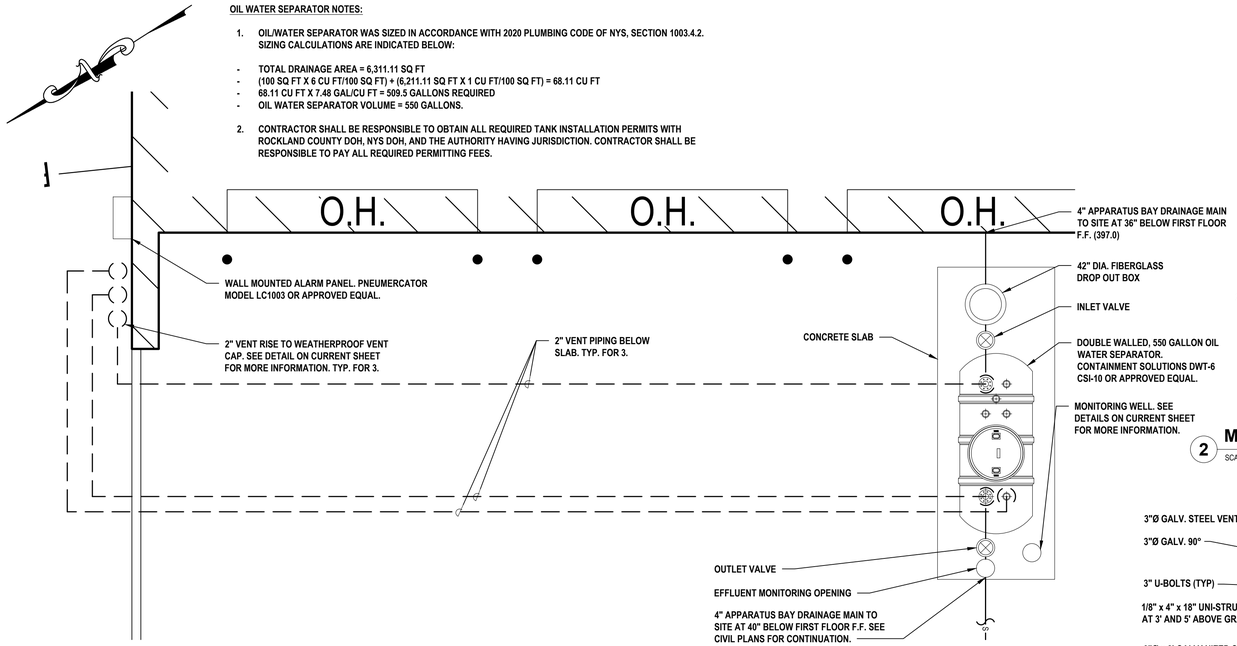

1 Oil Water Separator Enlarged Plan

SCALE: 1/2"=1'-0"

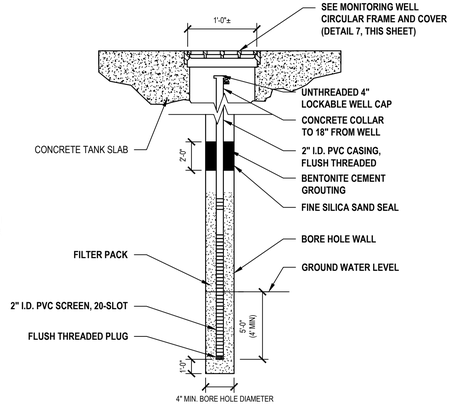

2 Monitoring Well

SCALE: NTS

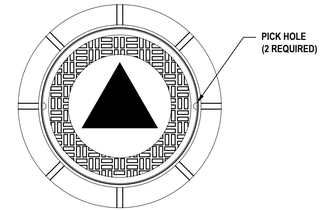

PLAN

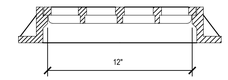

SECTION

NOTE:

1. CASTINGS MUST BE CAST IRON CAPABLE OF SUPPORTING THE AASHTO HS-20 HIGHWAY LOADING.
2. MONITORING WELL MANHOLE COVER MARKING SYMBOL SHALL BE A BLACK EQUILATERAL TRIANGLE ON A WHITE BACKGROUND.

3 Monitoring Well Circular Frame & Cover - Heavy Duty

SCALE: NTS

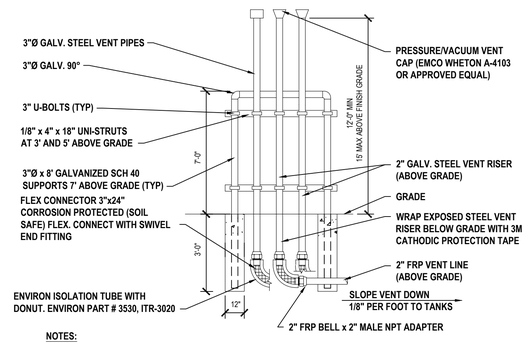

NOTES:

1. VENT RISER TO EXTEND A MINIMUM OF 12' ABOVE GRADE WHEN LOCATED IN REMOTE AREA.
2. ALL STEEL PIPES & CLAMPS ABOVE GRADE SHALL BE PAINTED.
3. PRIOR TO PAINTING, ALL GALVANIZED METAL MUST BE PROPERLY PREPPED. PROVIDE BOLLARDS TO PROTECT VENTS AS NECESSARY.
4. A MINIMUM DISTANCE OF 5' (PER FIRE AND ELECTRIC CODE) IS REQUIRED FROM ANY ELECTRICAL WIRES AND EQUIPMENT TO THE OPEN END OF THE VENT, EXTENDING IN ALL DIRECTIONS.

4 Vent Risers

SCALE: NTS SPECIFICATION #

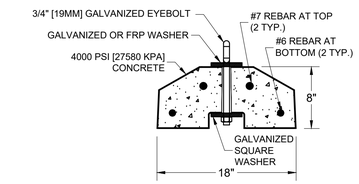

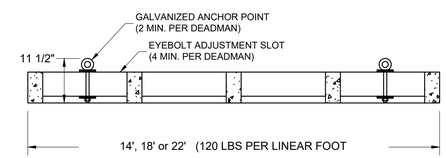

5 UGST Concrete Deadman

SCALE: NTS

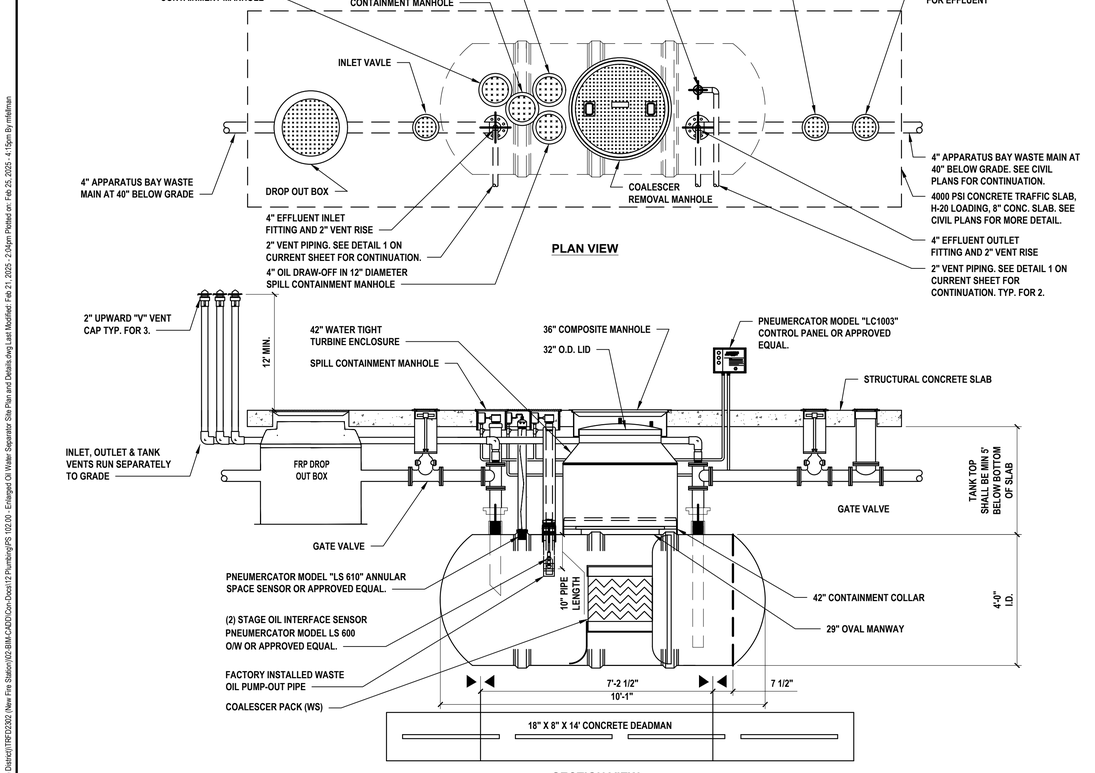

6 Oil Water Separator Details

SCALE: N.T.S.

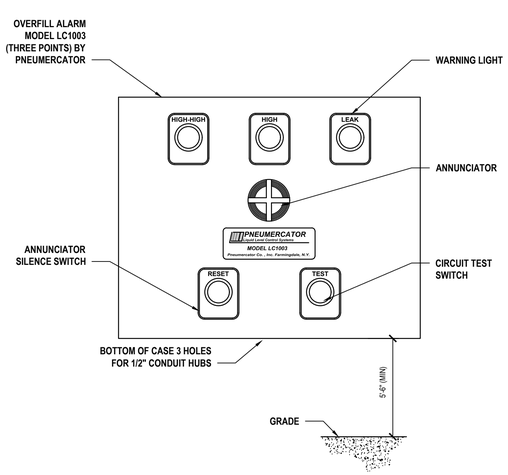

1 Audible / Visual Overfill Alarm

SCALE: NTS SPECIFICATION #

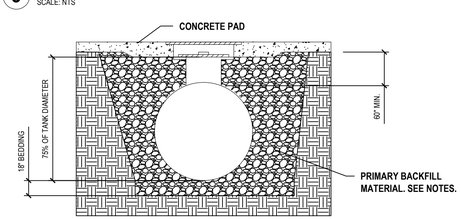

NOTE:

1. DO NOT MIX APPROVED BACKFILL WITH SAND OR NATIVE SOIL.
2. DO NOT BACKFILL TANK WITH SAND OR NATIVE SOIL.
3. REPLACE ALL EXCAVATED NATIVE SOIL WITH APPROVED BACKFILL OF PROPER SIZE AND GRADATION.
4. USE BACKFILL WHICH MEETS ASTM C-33 FOR QUALITY AND SOUNDNESS.
5. REQUIRE BACKFILL SUPPLIER TO CERTIFY, WITH A SIEVE ANALYSIS, THAT THE BACKFILL MEETS THIS SPECIFICATION.
6. SIEVE ANALYSIS MUST BE ATTACHED TO THE TANK INSTALLATION CHECKLIST.
7. KEEP BACKFILL DRY AND FREE OF ICE IN FREEZING CONDITIONS.
8. USE ONLY APPROVED PEA GRAVEL OR CRUSHED STONE.

APPROVED BACKFILL MATERIAL

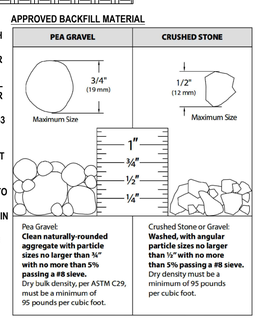

7 Typical Tank Backfill Detail

SCALE: NTS

H2M architects + engineers

538 Broad Hollow Road, 4th Floor East
Melville, NY 11747
631.756.8000 • www.h2m.com
NY Architecture & Landscape Architecture: No Certificate Required
NY Engineering Certificate of Authorization No. 0018178

CONSULTANTS:

MARK	DATE	DESCRIPTION

STATE OF NEW YORK · JONATHAN RICHARD MURATORE · 096440-1 · LICENSED PROFESSIONAL ENGINEER

10/31/2027
JONATHAN R. MURATORE, P.E.
EXP. DATE
NY PROFESSIONAL ENGINEER Lic. No. 096440

"IN ACCORDANCE WITH ARTICLE 145, SECTION 7209 OF THE NYS EDUCATION LAW, ALTERATION OF THIS DOCUMENT EXCEPT BY LICENSE PROFESSIONAL IS ILLEGAL"

DESIGNED BY:	DRAWN BY:	CHECKED BY:	REVIEWED BY:
CRG	MPF/CRG	JRM	JRM

PROJECT No.:	DATE:	SCALE:
TRFD 2302	FEBRUARY 2025	AS SHOWN

CLIENT

THIELLS ROSEVILLE FIRE DISTRICT

NEW 26-100 FIRE HEADQUARTERS

65 W RAMAPO RD GARNERVILLE, NY 10923

CONTRACT

CONTRACT P PLUMBING CONTRACT

STATUS

FINAL BID DOCUMENT

SHEET TITLE

ENLARGED OIL WATER SEPARATOR PLAN AND DETAILS

DRAWING No.

PS 102.00

X:\TRFD\Thiells Roseville Fire District\TRFD2302 (New Fire Station)\02-BIM-CADD\Civ-Docs\12 Plumbing\PS 102.00 - Enlarged Oil Water Separator Site Plan and Details.dwg Last Modified: Feb 21, 2025 - 2:04pm Plotted on: Feb 25, 2025 - 4:15pm By:mfelman

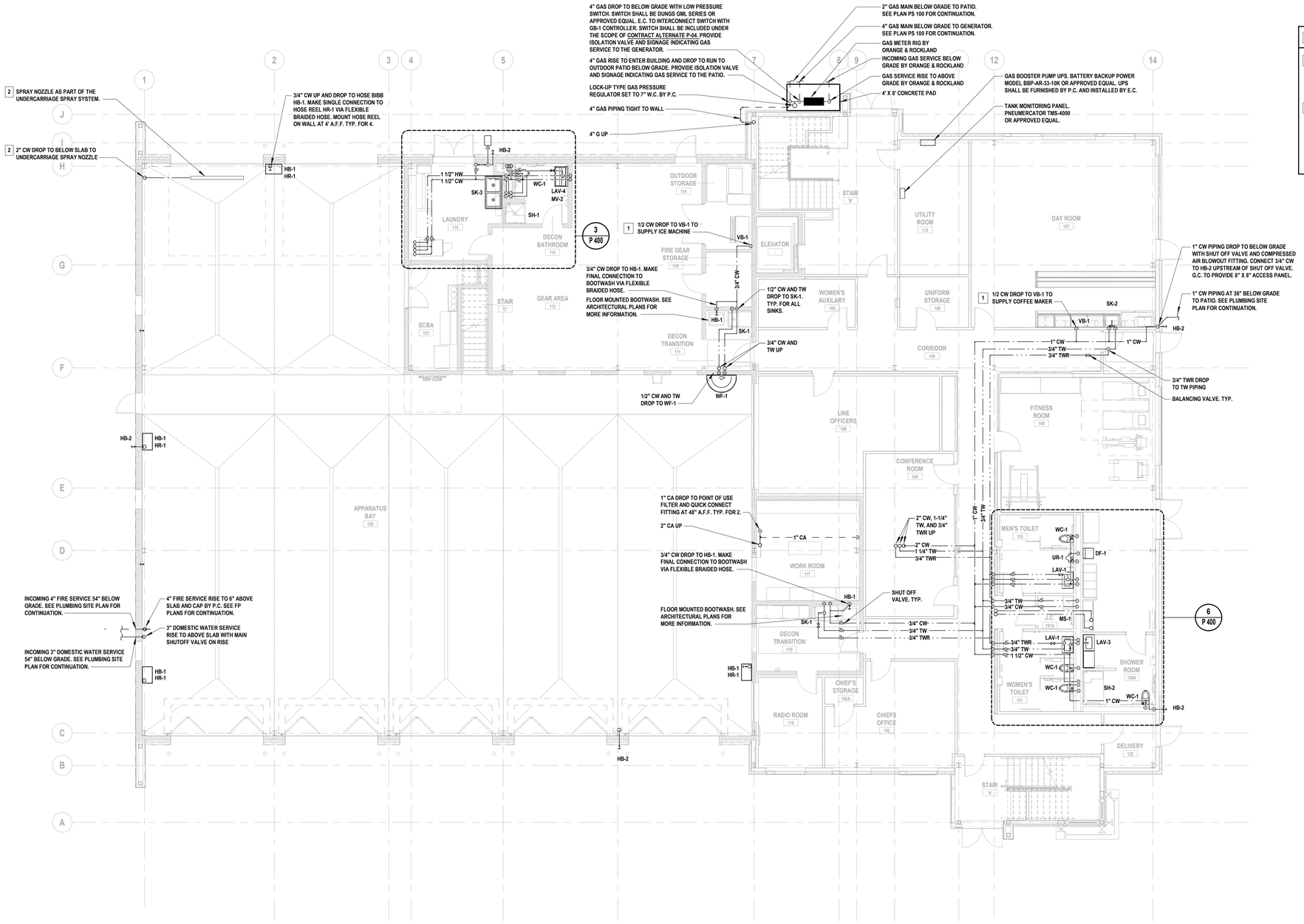

1 Domestic Water, Gas, and Compressed Air First Floor Plan

SCALE: 1/8" = 1'-0"

X KEYED PLUMBING NOTES

1. PROVIDE MANUFACTURER-RECOMMENDED POINT OF USE WATER FILTER, ASSE 1024 LISTED LEAD FREE DUAL CHECK VALVE, AND WATER HAMMER ARRESTOR ON CW DROP TO BEVERAGE DISPENSING EQUIPMENT.
2. UNDERCARRIAGE SPRAY SYSTEM SHALL INCLUDE SPRAY NOZZLE, 3 HP PUMP, AND 250 GALLON HOLDING TANK. SYSTEM SHALL BE MCHENRY MODEL WCU-35-0ME3 OR APPROVED EQUAL. SYSTEM AND ALL ASSOCIATED PIPING, VALVES, HOSE BIBBS, BACKFLOW PREVENTERS, MATERIALS, AND INSTALLATION COSTS SHALL BE INCLUDED UNDER THE SCOPE OF CONTRACT ALTERNATE P-01. SEE ARCHITECTURAL PLANS FOR MORE INFORMATION.

H2M architects + engineers

538 Broad Hollow Road, 4th Floor East
Melville, NY 11747
631.756.8000 • www.h2m.com
NY Architecture & Landscape Architecture: No Certificate Required
NY Engineering Certificate of Authorization No.: 0018178

CONSULTANTS:

MARK	DATE	DESCRIPTION

STATE OF NEW YORK · JONATHAN RICHARD MURATORE · 096440-1 · LICENSED PROFESSIONAL ENGINEER

10/31/2027
Exp. Date

JONATHAN R. MURATORE, P.E.
NY PROFESSIONAL ENGINEER Lic. No. 096440

"IN ACCORDANCE WITH ARTICLE 145, SECTION 7209 OF THE NYS EDUCATION LAW, ALTERATION OF THIS DOCUMENT EXCEPT BY A LICENSED PROFESSIONAL IS ILLEGAL"

DESIGNED BY:	DRAWN BY:	CHECKED BY:	REVIEWED BY:
CRG	MPF/CRG	JRM	JRM
PROJECT No: TRFD 2302	DATE: FEBRUARY 2025	SCALE: AS SHOWN	

CLIENT

THIELLS ROSEVILLE FIRE DISTRICT

NEW 26-100 FIRE HEADQUARTERS

THIELLS 26 FD

65 W RAMAPO ROAD GARNERVILLE, NY 10923

CONTRACT

CONTRACT P PLUMBING CONSTRUCTION

STATUS

FINAL BID DOCUMENT

SHEET TITLE

DOMESTIC WATER, GAS, AND COMPRESSED AIR FIRST FLOOR PLAN

DRAWING No.

P 120.00

C:\Users\mfeilman\Documents_Revit Backup\TRFD2302_Central23-M_mfeilman24zX2.rvt

2/25/2025 4:10:55 PM

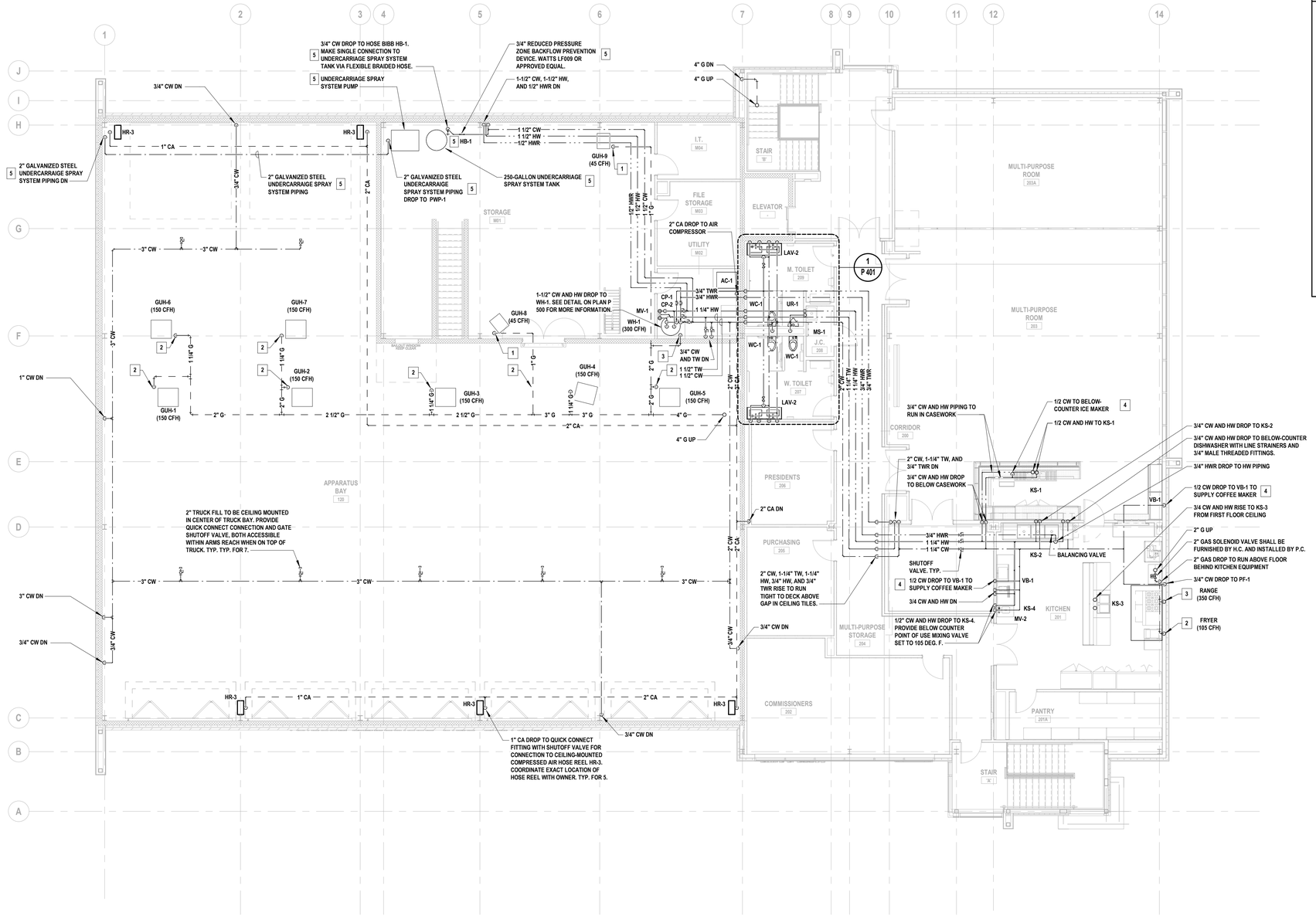

1 **Domestic Water, Gas, and Compressed Air Second Floor Plan**
SCALE: 1/8" = 1'-0"

X KEYED PLUMBING NOTES

1. 1" GAS PIPING TO GAS-FIRED EQUIPMENT. REDUCE PIPE SIZE AT CONNECTION POINT TO MATCH EQUIPMENT MANUFACTURER'S REQUIREMENTS. FOR TYPICAL GAS CONNECTION, SEE DETAIL ON SHEET P 500.
2. 1-1/4" GAS PIPING TO GAS-FIRED EQUIPMENT. REDUCE PIPE SIZE AT CONNECTION POINT TO MATCH EQUIPMENT MANUFACTURER'S REQUIREMENTS. FOR KITCHEN EQUIPMENT, P.C. TO MAKE FINAL CONNECTION WITH FLEXIBLE GAS PIPE. FOR TYPICAL GAS CONNECTION, SEE DETAIL ON SHEET P 500.
3. 2" GAS PIPING TO GAS-FIRED EQUIPMENT. REDUCE PIPE SIZE AT CONNECTION POINT TO MATCH EQUIPMENT MANUFACTURER'S REQUIREMENTS. FOR KITCHEN EQUIPMENT, P.C. TO MAKE FINAL CONNECTION WITH FLEXIBLE GAS PIPE. FOR TYPICAL GAS CONNECTION, SEE DETAIL ON SHEET P 500.
4. PROVIDE MANUFACTURER-RECOMMENDED POINT OF USE WATER FILTER, ASSE 1024 LISTED LEAD FREE DUAL CHECK VALVE, AND WATER HAMMER ARRESTOR ON CW DROP TO BEVERAGE DISPENSING EQUIPMENT.
5. UNDERCARRIAGE SPRAY SYSTEM SHALL INCLUDE SPRAY NOZZLE, 3 HP PUMP, AND 250 GALLON HOLDING TANK. SYSTEM SHALL BE MCHENRY MODEL WCU-35-0ME3 OR APPROVED EQUAL. SYSTEM AND ALL ASSOCIATED PIPING, VALVES, HOSE BIBBS, BACKFLOW PREVENTERS, MATERIALS, AND INSTALLATION COSTS SHALL BE INCLUDED UNDER THE SCOPE OF CONTRACT ALTERNATE P-01.

H2M architects + engineers
538 Broad Hollow Road, 4th Floor East
Melville, NY 11747
631.756.8000 • www.h2m.com
NY Architecture & Landscape Architecture: No Certificate Required
NY Engineering Certificate of Authorization No.: 0018178

CONSULTANTS:

MARK	DATE	DESCRIPTION

STATE OF NEW YORK · JONATHAN RICHARD MURATORE · 096440-1 · LICENSED PROFESSIONAL ENGINEER

10/31/2027
Exp. Date

JONATHAN R. MURATORE, P.E.
NY PROFESSIONAL ENGINEER Lic. No. 096440

"IN ACCORDANCE WITH ARTICLE 145, SECTION 7209 OF THE NYS EDUCATION LAW, ALTERATION OF THIS DOCUMENT EXCEPT BY A LICENSED PROFESSIONAL IS ILLEGAL"

DESIGNED BY:	DRAWN BY:	CHECKED BY:	REVIEWED BY:
CRG	MPF/CRG	JRM	JRM
PROJECT No: TRFD 2302	DATE: FEBRUARY 2025	SCALE: AS SHOWN	

CLIENT

THIELLS ROSEVILLE FIRE DISTRICT

NEW 26-100 FIRE HEADQUARTERS

THIELLS 26 FD

65 W RAMAPO ROAD GARNERVILLE, NY 10923

CONTRACT

CONTRACT P PLUMBING CONSTRUCTION

STATUS

FINAL BID DOCUMENT

SHEET TITLE

DOMESTIC WATER, GAS, AND COMPRESSED AIR SECOND FLOOR PLAN

DRAWING No.

P 121.00

C:\Users\mfeilman\Documents_Revit Backup\TRFD2302_Central23-M_mfeilmanZ42X2.rvt

2/25/2025 4:10:59 PM

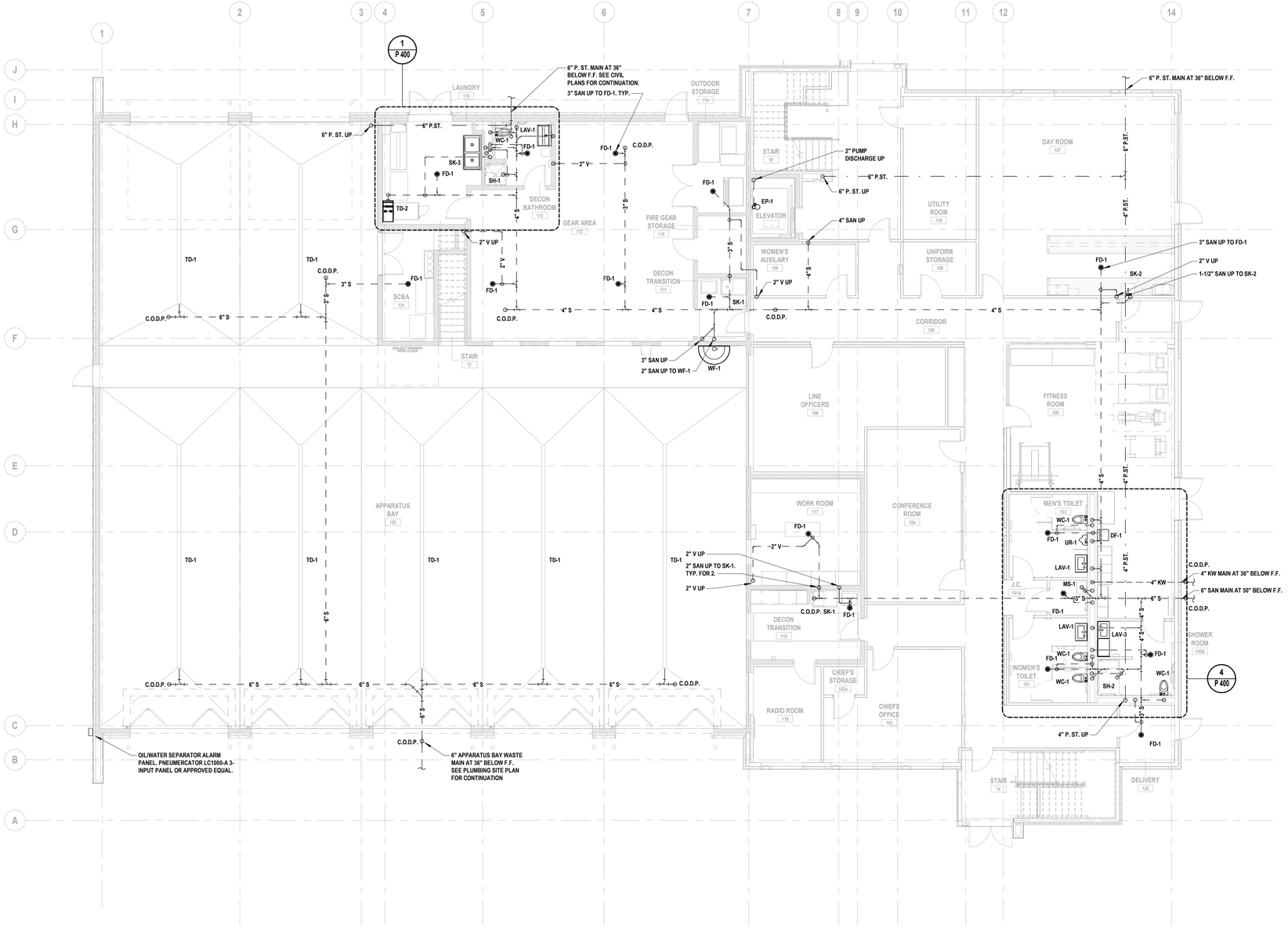

1 Waste, Vent, and Storm Underslab Plan

SCALE: 1/8" = 1'-0"

GENERAL NOTES:

1. ALL PIPING BELOW SLAB FROM TRENCH DRAINS IN APPARATUS BAY SHALL BE DOUBLE-WALLED. PROVIDE LEAK DETECTION SENSOR AT LOW POINT OF SYSTEM. TIE LEAK SENSOR INTO OIL WATER SEPARATOR CONTROL PANEL.

H2M architects + engineers

538 Broad Hollow Road, 4th Floor East
Melville, NY 11747
631.756.8000 • www.h2m.com
NY Architecture & Landscape Architecture: No Certificate Required
NY Engineering Certificate of Authorization No.: 0018178

CONSULTANTS:

MARK	DATE	DESCRIPTION

STATE OF NEW YORK · JONATHAN RICHARD MURATORE · 096440-1 · LICENSED PROFESSIONAL ENGINEER

10/31/2027
Exp. Date

JONATHAN R. MURATORE, P.E.
NY PROFESSIONAL ENGINEER Lic. No. 096440

"IN ACCORDANCE WITH ARTICLE 145, SECTION 7209 OF THE NYS EDUCATION LAW, ALTERATION OF THIS DOCUMENT EXCEPT BY A LICENSED PROFESSIONAL IS ILLEGAL"

DESIGNED BY:	DRAWN BY:	CHECKED BY:	REVIEWED BY:
CRG	MPF/CRG	JRM	JRM
PROJECT No: TRFD 2302	DATE: FEBRUARY 2025	SCALE: AS SHOWN	

CLIENT

THIELLS ROSEVILLE FIRE DISTRICT

NEW 26-100 FIRE HEADQUARTERS

THIELLS 26 FD

65 W RAMAPO ROAD GARNERVILLE, NY 10923

CONTRACT

CONTRACT P PLUMBING CONSTRUCTION

STATUS

FINAL BID DOCUMENT

SHEET TITLE

WASTE, VENT, AND STORM UNDERSLAB PLAN

DRAWING No.

P 130.00

C:\Users\mfeltman\Documents_Revit Backup\TRFD2302_Central23-M_mfeltmanZ4JX2.rvt

2/25/2025 4:11:01 PM

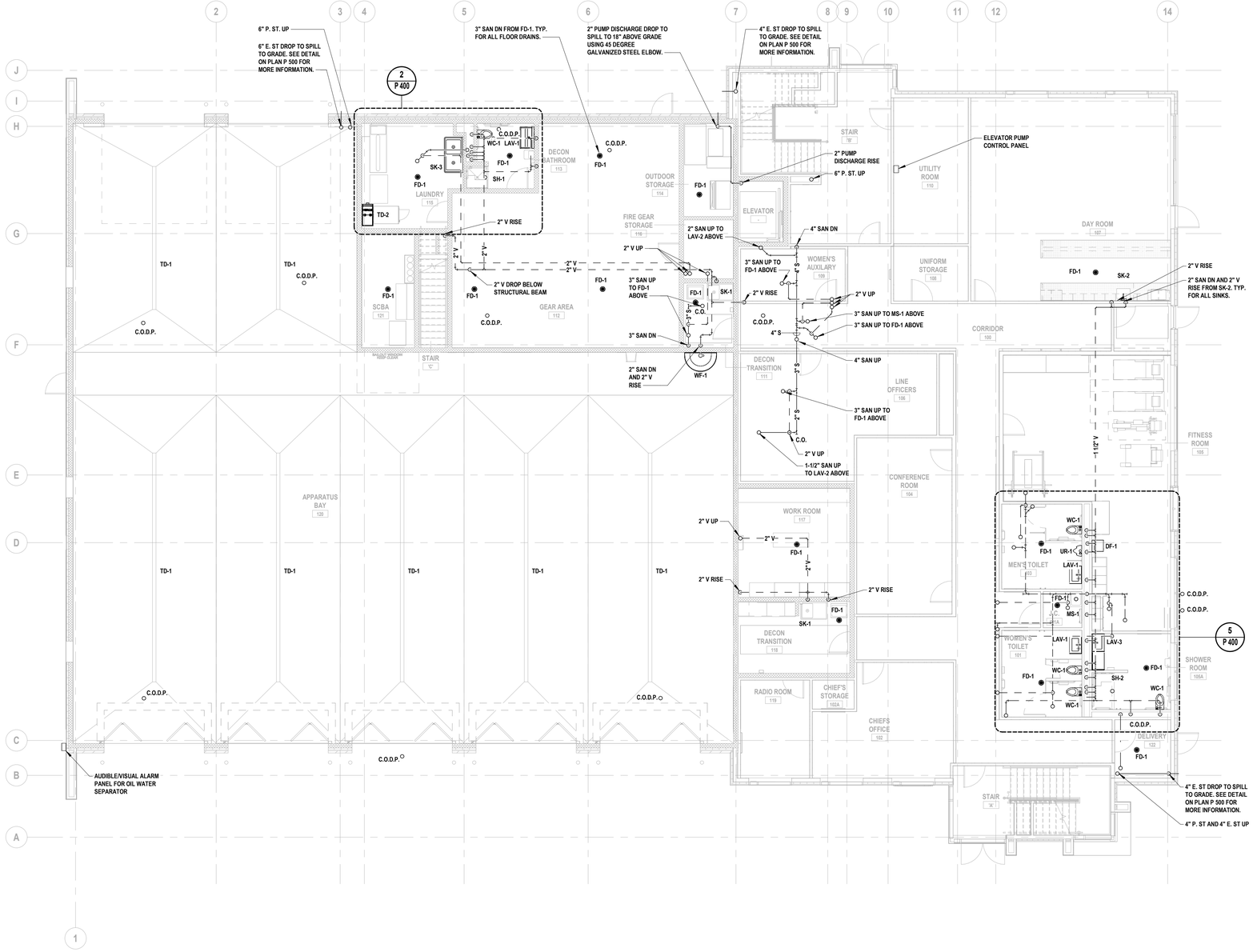

1 Waste, Vent, and Storm First Floor Plan

SCALE: 1/8" = 1'-0"

H2M architects + engineers

538 Broad Hollow Road, 4th Floor East
Melville, NY 11747
631.756.8000 • www.h2m.com
NY Architecture & Landscape Architecture: No Certificate Required
NY Engineering Certificate of Authorization No.: 0018178

CONSULTANTS:

MARK	DATE	DESCRIPTION

STATE OF NEW YORK · JONATHAN RICHARD MURATORE · 096440-1 · LICENSED PROFESSIONAL ENGINEER

10/31/2027
Exp. Date

JONATHAN R. MURATORE, P.E.
NY PROFESSIONAL ENGINEER Lic. No. 096440

"IN ACCORDANCE WITH ARTICLE 145, SECTION 7209 OF THE NYS EDUCATION LAW, ALTERATION OF THIS DOCUMENT EXCEPT BY A LICENSED PROFESSIONAL IS ILLEGAL"

DESIGNED BY:	DRAWN BY:	CHECKED BY:	REVIEWED BY:
CRG	MPF/CRG	JRM	JRM

PROJECT No:	DATE:	SCALE:
TRFD 2302	FEBRUARY 2025	AS SHOWN

CLIENT

THIELLS ROSEVILLE FIRE DISTRICT

NEW 26-100 FIRE HEADQUARTERS

THIELLS 26 FD

65 W RAMAPO ROAD
GARNERVILLE, NY 10923

CONTRACT

CONTRACT P
PLUMBING CONSTRUCTION

STATUS

FINAL BID DOCUMENT

SHEET TITLE

WASTE, VENT, AND STORM FIRST FLOOR PLAN

DRAWING No.

P 131.00

C:\Users\mfeilman\Documents_Revit Backup\TRFD2302_Central23-M_mfeilmanZ4DX2.rvt

2/25/2025 4:11:04 PM

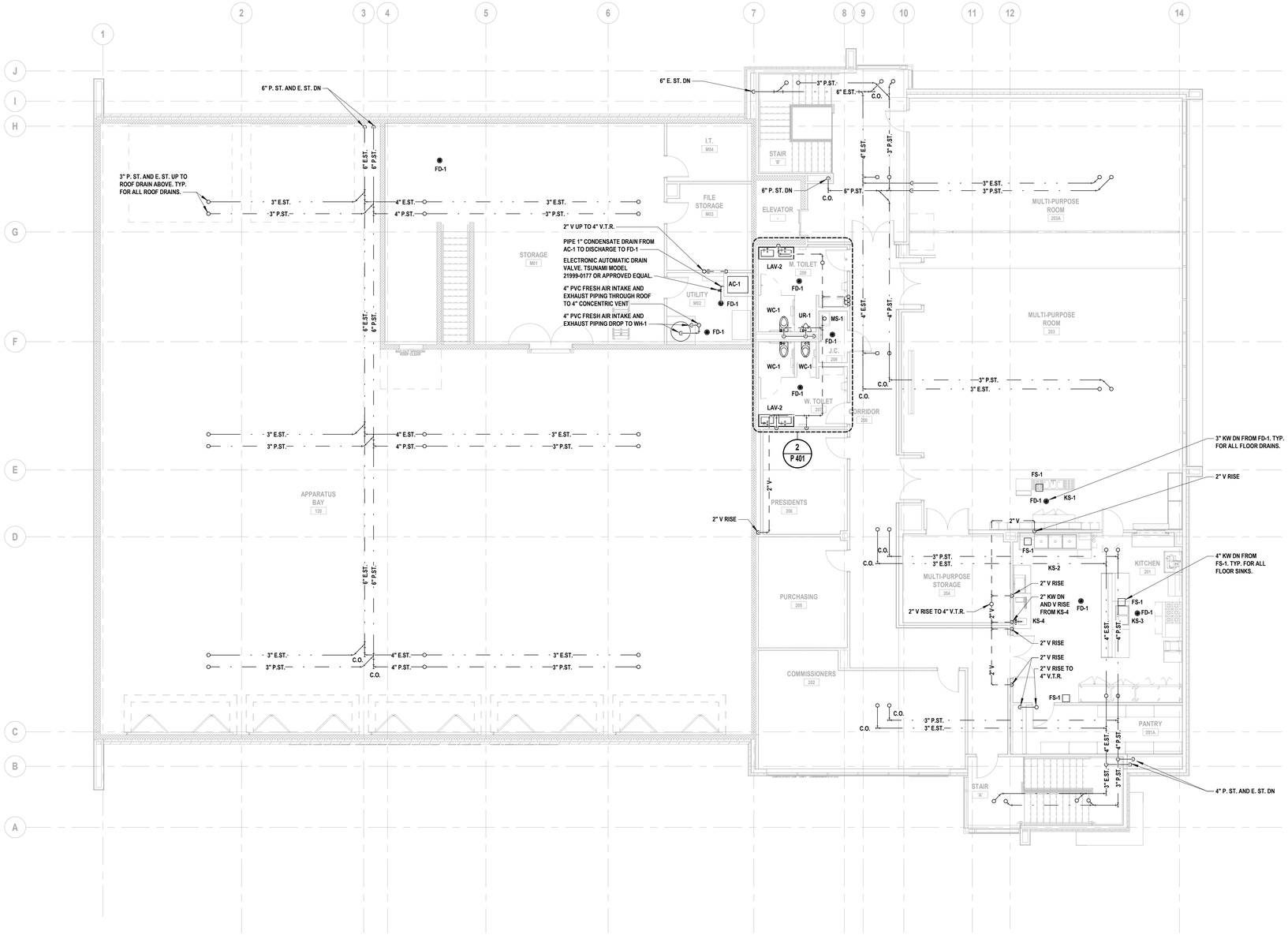

1 **Waste, Vent, and Storm Second Floor Plan**
SCALE: 1/8" = 1'-0"

H2M architects + engineers
538 Broad Hollow Road, 4th Floor East
Melville, NY 11747
631.756.8000 • www.h2m.com
NY Architecture & Landscape Architecture: No Certificate Required
NY Engineering Certificate of Authorization No.: 0018178

CONSULTANTS:

MARK	DATE	DESCRIPTION

STATE OF NEW YORK · JONATHAN RICHARD MURATORE · 096440-1 · LICENSED PROFESSIONAL ENGINEER

10/31/2027 Exp. Date

JONATHAN R. MURATORE, P.E.
NY PROFESSIONAL ENGINEER Lic. No. 096440

"IN ACCORDANCE WITH ARTICLE 145, SECTION 7209 OF THE NYS EDUCATION LAW, ALTERATION OF THIS DOCUMENT EXCEPT BY A LICENSED PROFESSIONAL IS ILLEGAL"

DESIGNED BY:	DRAWN BY:	CHECKED BY:	REVIEWED BY:
CRG	MPF/CRG	JRM	JRM

PROJECT No:	DATE:	SCALE:
TRFD 2302	FEBRUARY 2025	AS SHOWN

CLIENT

THIELLS ROSEVILLE FIRE DISTRICT

NEW 26-100 FIRE HEADQUARTERS

THIELLS 26 FD

65 W RAMAPO ROAD
GARNERVILLE, NY 10923

CONTRACT

CONTRACT P
PLUMBING CONSTRUCTION

STATUS

FINAL BID DOCUMENT

SHEET TITLE

WASTE, VENT, AND STORM SECOND FLOOR PLAN

DRAWING No.

P 132.00

C:\Users\mfeilman\Documents_Revit Backup\TRFD2302_Central23-M_mfeilmanZ42X2.rvt

2/25/2025 4:11:10 PM

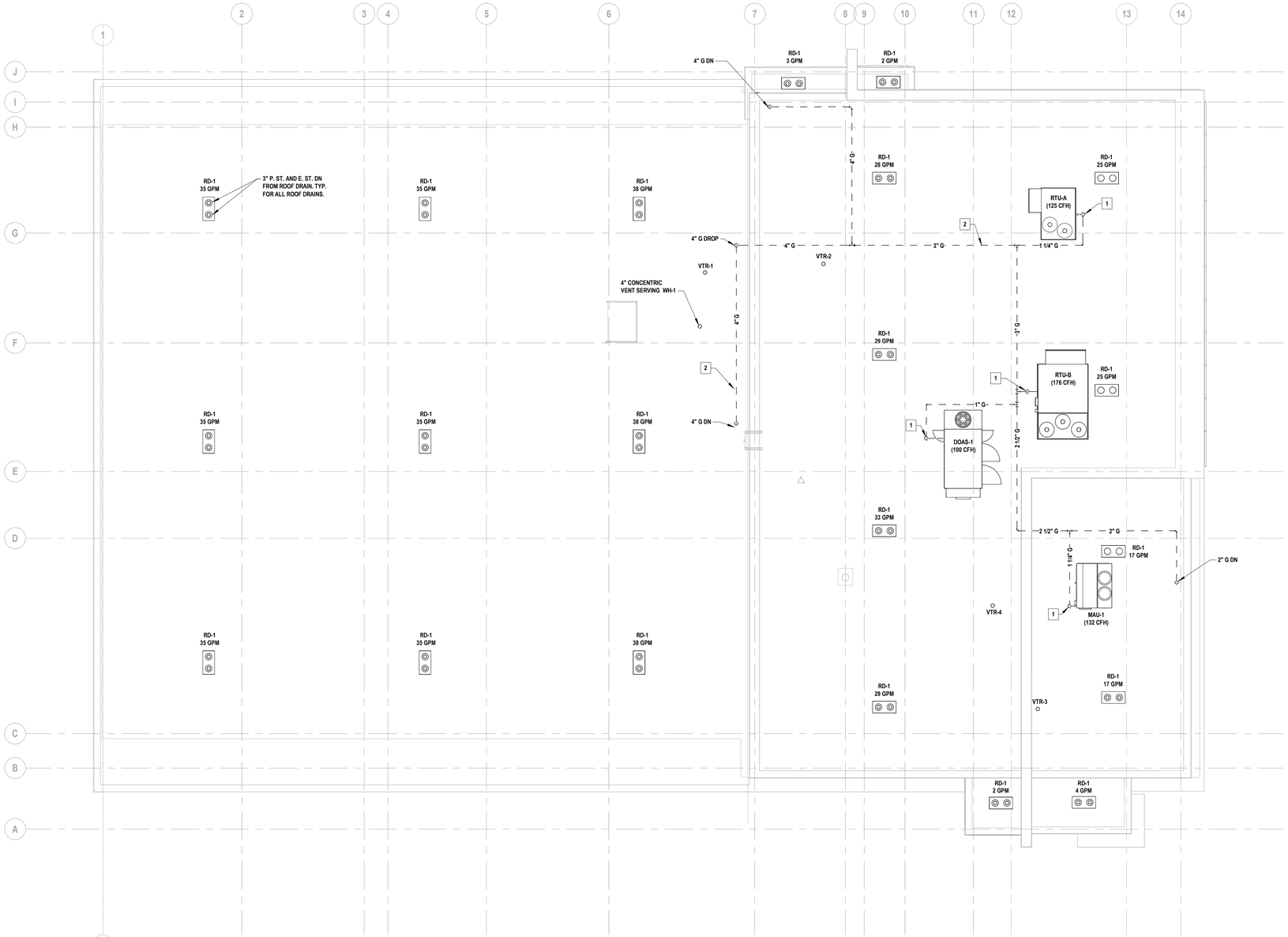

1 Plumbing Roof Plan

SCALE: 1/8" = 1'-0"

X KEYED PLUMBING NOTES

1. 1-1/4" GAS PIPING TO GAS-FIRED EQUIPMENT. REDUCE PIPE SIZE AT CONNECTION POINT TO MATCH EQUIPMENT MANUFACTURER'S REQUIREMENTS. FOR TYPICAL GAS CONNECTION, SEE DETAIL ON SHEET P 500.
2. GAS PIPING SHALL BE SUPPORTED ON ROOF USING APPROVED PIPE SUPPORTS. SEE DETAIL ON SHEET P 500. TYPICAL FOR ALL NEW GAS PIPING ON ROOF.

H2M architects + engineers

538 Broad Hollow Road, 4th Floor East
Melville, NY 11747
631.756.8000 • www.h2m.com
NY Architecture & Landscape Architecture: No Certificate Required
NY Engineering Certificate of Authorization No.: 0018178

CONSULTANTS:

MARK	DATE	DESCRIPTION

STATE OF NEW YORK · JONATHAN RICHARD MURATORE · 096440-1 · LICENSED PROFESSIONAL ENGINEER

10/31/2027
Exp. Date

JONATHAN R. MURATORE, P.E.
NY PROFESSIONAL ENGINEER Lic. No. 096440

"IN ACCORDANCE WITH ARTICLE 145, SECTION 7209 OF THE NYS EDUCATION LAW, ALTERATION OF THIS DOCUMENT EXCEPT BY A LICENSED PROFESSIONAL IS ILLEGAL"

DESIGNED BY:	DRAWN BY:	CHECKED BY:	REVIEWED BY:
CRG	MPF/CRG	JRM	JRM
PROJECT No: TRFD 2302	DATE: FEBRUARY 2025	SCALE: AS SHOWN	

CLIENT

THIELLS ROSEVILLE FIRE DISTRICT

NEW 26-100 FIRE HEADQUARTERS

THIELLS 26 FD

65 W RAMAPO ROAD
GARNERVILLE, NY 10923

CONTRACT

CONTRACT P
PLUMBING CONSTRUCTION

STATUS

FINAL BID DOCUMENT

SHEET TITLE

PLUMBING ROOF PLAN

DRAWING No.

P 140.00

C:\Users\mfellman\Documents_Revit Backup\TRFD2302_Central23M_mfellman2423X2.rvt

2/25/2025 4:11:12 PM

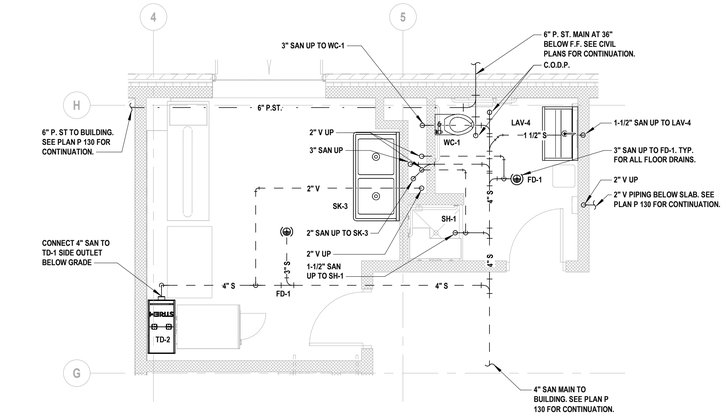

1 Enlarged Decon Laundry and Bathroom Sanitary and Vent Underslab Plan

SCALE: 1/4" = 1'-0"

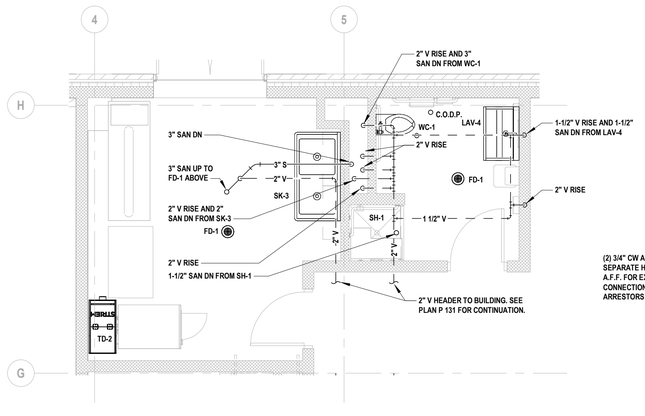

2 Enlarged Decon Laundry and Bathroom Sanitary and Vent Plan

SCALE: 1/4" = 1'-0"

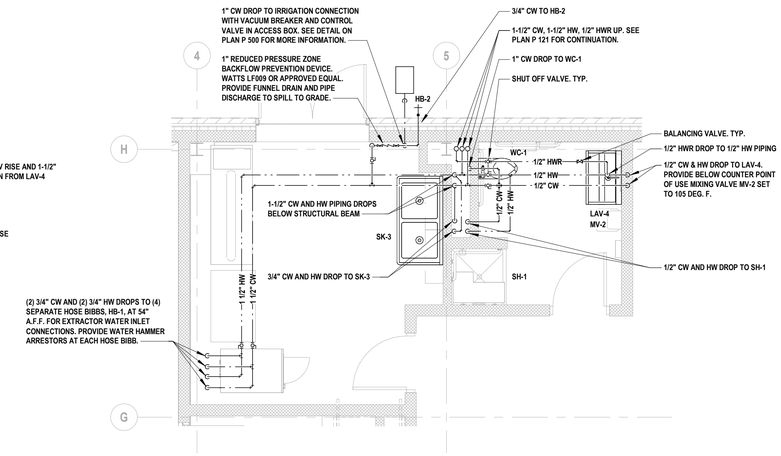

3 Enlarged Decon Laundry and Bathroom Domestic Water Plan

SCALE: 1/4" = 1'-0"

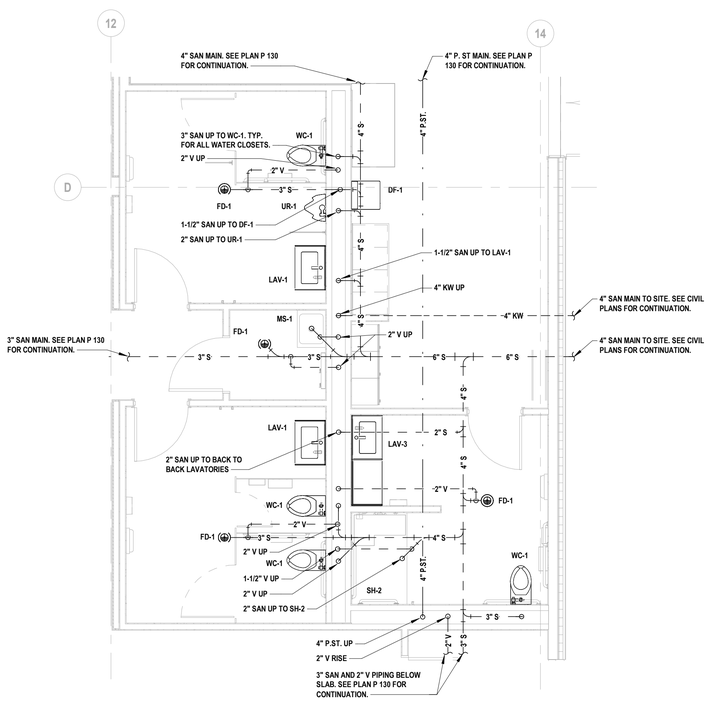

4 Enlarged First Floor Bathrooms Underslab Sanitary and Vent Plan

SCALE: 1/4" = 1'-0"

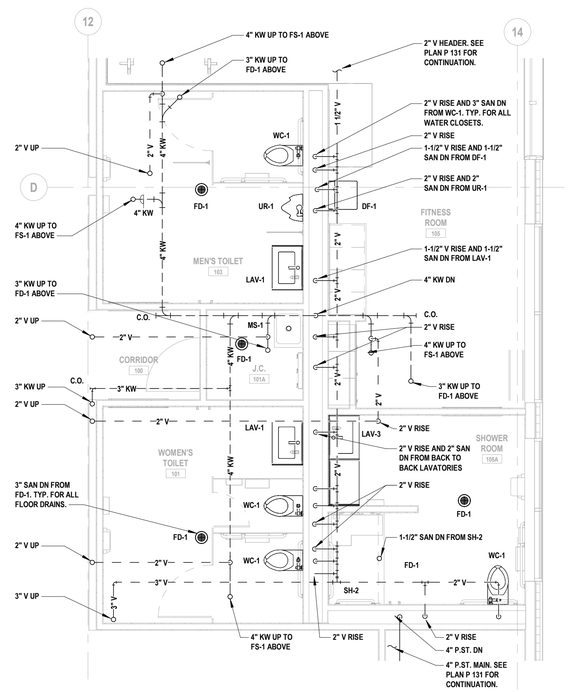

5 Enlarged First Floor Bathrooms Sanitary and Vent Plan

SCALE: 1/4" = 1'-0"

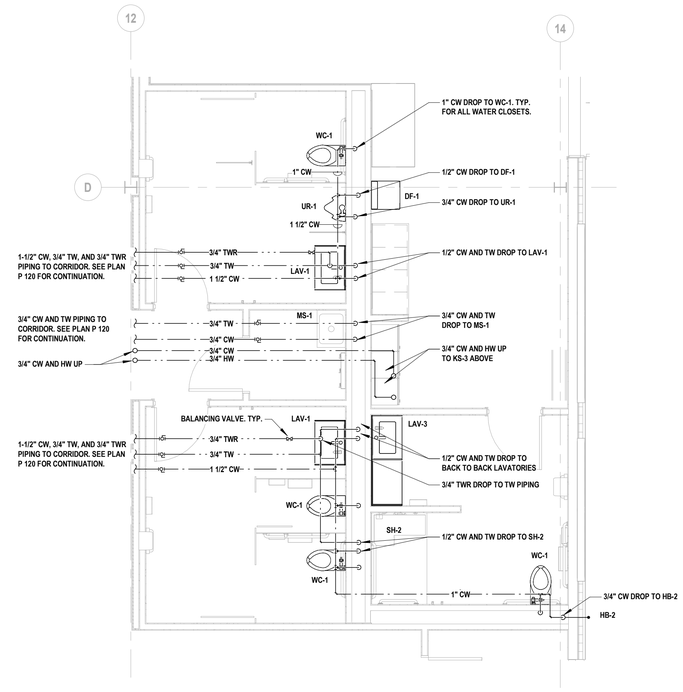

6 Enlarged First Floor Bathrooms Domestic Water Plan

SCALE: 1/4" = 1'-0"

H2M architects + engineers

538 Broad Hollow Road, 4th Floor East
Melville, NY 11747
631.756.8000 • www.h2m.com
NY Architecture & Landscape Architecture: No Certificate Required
NY Engineering Certificate of Authorization No.: 0018178

CONSULTANTS:

MARK	DATE	DESCRIPTION

STATE OF NEW YORK · JONATHAN RICHARD MURATORE · 096440-1 · LICENSED PROFESSIONAL ENGINEER

10/31/2027 Exp. Date

JONATHAN R. MURATORE, P.E.
NY PROFESSIONAL ENGINEER Lic. No. 096440

"IN ACCORDANCE WITH ARTICLE 145, SECTION 7209 OF THE NYS EDUCATION LAW, ALTERATION OF THIS DOCUMENT EXCEPT BY A LICENSED PROFESSIONAL IS ILLEGAL"

DESIGNED BY:	DRAWN BY:	CHECKED BY:	REVIEWED BY:
CRG	MPF/CRG	JRM	JRM
PROJECT No: TRFD 2302	DATE: FEBRUARY 2025	SCALE: AS SHOWN	

CLIENT

THIELLS ROSEVILLE FIRE DISTRICT

NEW 26-100 FIRE HEADQUARTERS

THIELLS 26 FD

65 W RAMAPO ROAD GARNERVILLE, NY 10923

CONTRACT

CONTRACT P PLUMBING CONSTRUCTION

STATUS

FINAL BID DOCUMENT

SHEET TITLE

PLUMBING ENLARGEMENT PLANS (1 OF 2)

DRAWING No.

P 400.00

C:\Users\mfeltman\Documents_Revit Backup\TRFD2302_Central23-M_mfeltman24X2X2.rvt

2/25/2025 4:11:19 PM

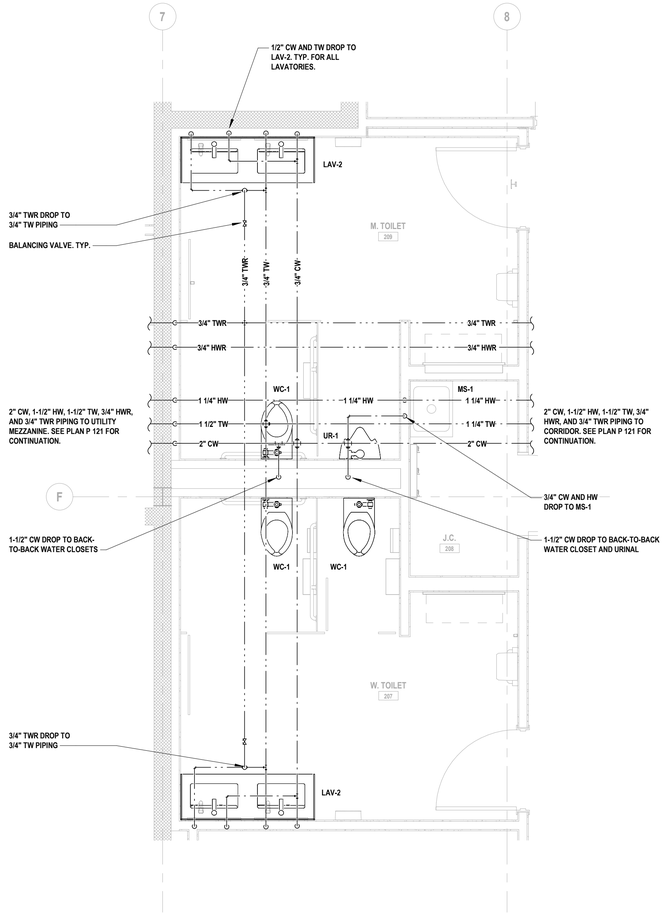

1 Enlarged Second Floor Bathrooms Domestic Water Plan
SCALE: 3/8" = 1'-0"

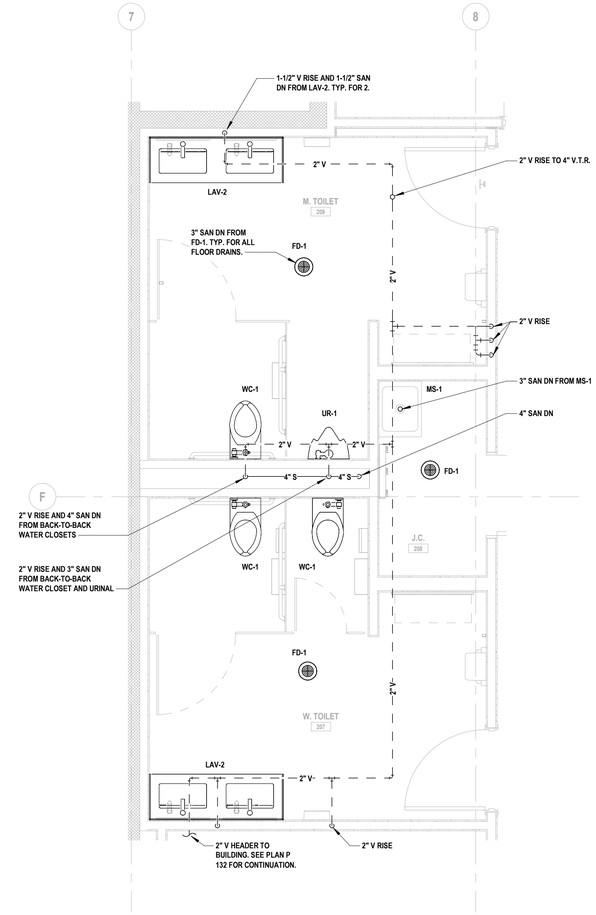

2 Enlarged Second Floor Bathrooms Sanitary and Vent Plan
SCALE: 3/8" = 1'-0"

C:\Users\mfellman\Documents_Revit Backup\TRFD2302_Central23-M_mfellman242X2.rvt

2/25/2025 4:11:22 PM

H2M architects + engineers

538 Broad Hollow Road, 4th Floor East
Melville, NY 11747
631.756.8000 • www.h2m.com
NY Architecture & Landscape Architecture: No Certificate Required
NY Engineering Certificate of Authorization No.: 0018178

CONSULTANTS:

MARK	DATE	DESCRIPTION

STATE OF NEW YORK · JONATHAN RICHARD MURATORE · 096440-1 · LICENSED PROFESSIONAL ENGINEER

10/31/2027
Exp. Date

JONATHAN R. MURATORE, P.E.
NY PROFESSIONAL ENGINEER Lic. No. 096440

"IN ACCORDANCE WITH ARTICLE 145, SECTION 7209 OF THE NYS EDUCATION LAW, ALTERATION OF THIS DOCUMENT EXCEPT BY A LICENSED PROFESSIONAL IS ILLEGAL"

DESIGNED BY:	DRAWN BY:	CHECKED BY:	REVIEWED BY:
CRG	MPF/CRG	JRM	JRM
PROJECT No: TRFD 2302	DATE: FEBRUARY 2025	SCALE: AS SHOWN	

CLIENT

THIELLS ROSEVILLE FIRE DISTRICT

NEW 26-100 FIRE HEADQUARTERS

THIELLS 26 FD

65 W RAMAPO ROAD
GARNERVILLE, NY 10923

CONTRACT

CONTRACT P
PLUMBING CONSTRUCTION

STATUS

FINAL BID DOCUMENT

SHEET TITLE

PLUMBING ENLARGEMENT PLANS
(2 OF 2)

DRAWING No.

P 401.00

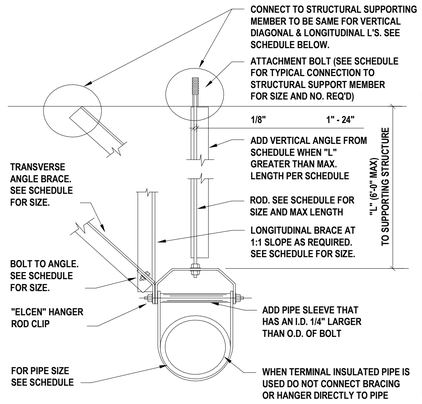

SCHEDULE FOR BRACING PIPES AND CONDUIT

PIPE SIZE (IN.)	MAXIMUM WEIGHT (LB/FT)	BRACE SPACING (FT)		VERTICAL HANGER ANGLES (IN.)	TRANSVERSE BRACE ANGLES (IN.)	LONGITUDINAL BRACE ANGLES (IN.)	BOLT SIZE (IN.)	CONNECTION TYPE TO STRUCTURAL MEMBER	ROD SIZE (IN.)	MAXIMUM LENGTH FOR RODS (IN.)
		TRANS. BRACING	LONG. BRACING							
2.5	7.9	40	80	L2 X 2 X 16GA	L3 X 3 X 16GA	L3 X 3 X 16GA	3/8	C	1/2	25
3	10.8	40	80	L2.5 X 2.5 X 16GA	L4 X 4 X 16GA	L4 X 4 X 16GA	3/8	C	1/2	25
4	16.3	40	80	L4 X 4 X 14GA	L4 X 4 X 14GA	L4 X 4 X 14GA	3/8	D	5/8	31.25
5	23.3	40	80	L4 X 4 X 14GA	L4 X 4 X 14GA	L4 X 4 X 14GA	1/2	D	3/4	37.5
6	31.5	40	40	L4 X 4 X 14GA	L3 X 3 X 12GA	L3 X 3 X 12GA	5/8	D	3/4	31.25
8	50.3	40	40	L4 X 4 X 14GA	L4 X 4 X 12GA	L4 X 4 X 12GA	3/4	D	7/8	43.75
10	74.7	20	20	L4 X 4 X 14GA	L3 X 3 X 12GA	L3 X 3 X 12GA	3/4	D	7/8	37.5

NOTES:

1. SEE DETAIL 2 ON CURRENT SHEET FOR STRUCTURAL MEMBER CONNECTION TYPES.
2. PROVIDE STANDARD CUT WASHERS BETWEEN ANGLE BRACES AND SECURING NUTS.

1 Pipe Hanger - Seismic

SCALE: N.T.S.

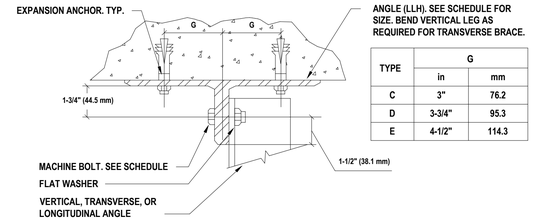

TYPE	G	
	in	mm
C	3"	76.2
D	3-3/4"	95.3
E	4-1/2"	114.3

SCHEDULE FOR TYPICAL CONNECTIONS TO STRUCTURAL SUPPORTING MEMBERS

TYPE	MAXIMUM LOAD CAPACITY (LB)	EXPANSION ANCHORS TO CONCRETE (IN.)	MACHINE BOLT END OF BRACE (IN.)	SPREADER SIZE (IN.)	MACHINE BOLT AT WOOD (IN.)	HOLLOW CORE PLANK ROD (IN.)	ANGLE SUPPORTING STRUCTURAL MEMBER
C	1586	2-1/2	1/2	C5 X 6.7	3/4	3/8	2 - 4 X 3 X 3/8 X 0 FT, 4 IN. LLH
D	2020	2-5/8	1/2	C6 X 8.2	3/4	1/2	2 - 5 X 3 X 3/8 X 0 FT, 4 IN. LLH

2 Pipe Hanger - Seismic Part 2

SCALE: N.T.S.

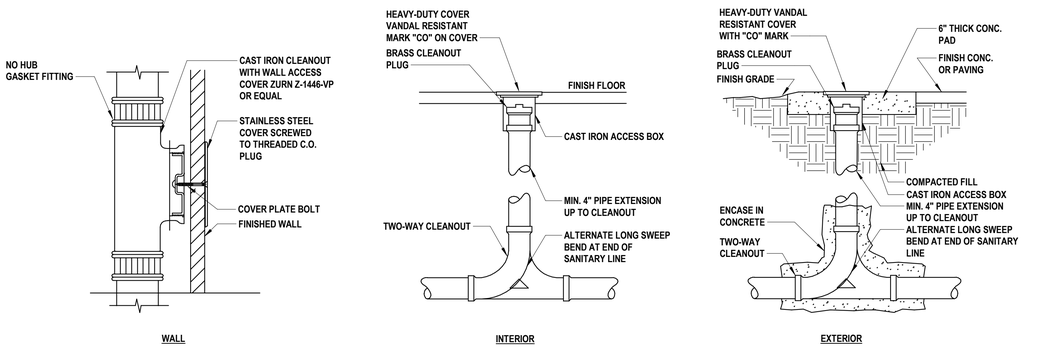

3 Cleanouts

SCALE: N.T.S.

PLUMBING LEGEND

TEMPERATURE GAUGE	FULL PORT BALL VALVE	MIXING VALVE
CHECK VALVE	AQUASTAT	DIELECTRIC UNION

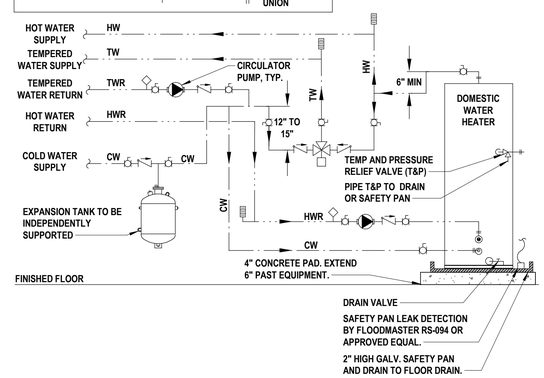

4 Tank Water Heater Piping Schematic

SCALE: N.T.S.

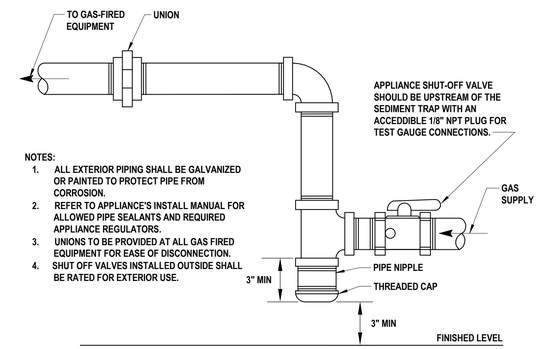

NOTES:

1. ALL EXTERIOR PIPING SHALL BE GALVANIZED OR PAINTED TO PROTECT PIPE FROM CORROSION.
2. REFER TO APPLIANCE'S INSTALL MANUAL FOR ALLOWED PIPE SEALANTS AND REQUIRED APPLIANCE REGULATORS.
3. UNIONS TO BE PROVIDED AT ALL GAS FIRED EQUIPMENT FOR EASE OF DISCONNECTION.
4. SHUT OFF VALVES INSTALLED OUTSIDE SHALL BE RATED FOR EXTERIOR USE.

5 Gas Connection

SCALE: N.T.S.

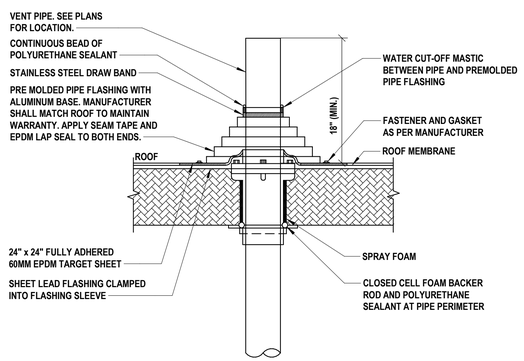

NOTES:

1. ROOF VENT SHALL BE 10-FEET MINIMUM AWAY FROM AIR INTAKES OF THE BUILDING OR 3-FEET MINIMUM ABOVE SUCH OPENINGS.
2. ALL ROOF PENETRATIONS SHALL BE COORDINATED WITH ROOF MANUFACTURER TO MAINTAIN WARRANTIES

6 Vent Through Roof

SCALE: N.T.S.

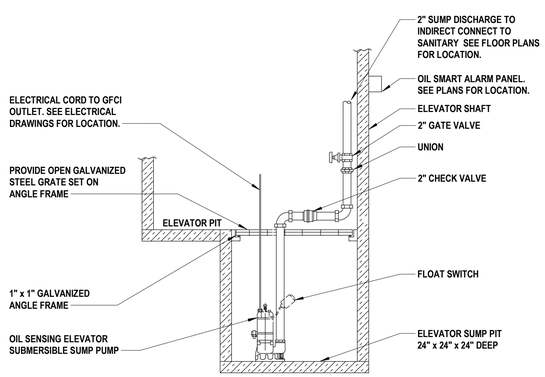

7 Elevator Sump Pump

SCALE: N.T.S.

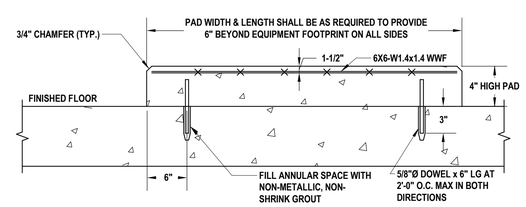

8 Equipment Pad

SCALE: N.T.S.

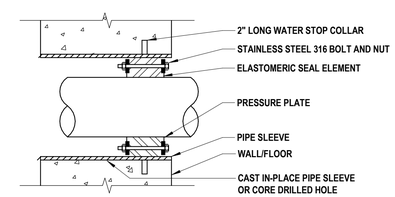

9 Link Seal Pipe Penetration

SCALE: N.T.S.

H2M architects + engineers

538 Broad Hollow Road, 4th Floor East
Melville, NY 11747
631.756.8000 • www.h2m.com
NY Architecture & Landscape Architecture: No Certificate Required
NY Engineering Certificate of Authorization No.: 0018178

CONSULTANTS:

MARK	DATE	DESCRIPTION

STATE OF NEW YORK · JONATHAN RICHARD MURATORE · 096440-1 · LICENSED PROFESSIONAL ENGINEER

10/31/2027
Exp. Date

JONATHAN R. MURATORE, P.E.
NY PROFESSIONAL ENGINEER Lic. No. 096440

"IN ACCORDANCE WITH ARTICLE 145, SECTION 7209 OF THE NYS EDUCATION LAW, ALTERATION OF THIS DOCUMENT EXCEPT BY A LICENSED PROFESSIONAL IS ILLEGAL"

DESIGNED BY:	DRAWN BY:	CHECKED BY:	REVIEWED BY:
CRG	MPF/CRG	JRM	JRM

PROJECT No:	DATE:	SCALE:
TRFD 2302	FEBRUARY 2025	AS SHOWN

CLIENT

THIELLS ROSEVILLE FIRE DISTRICT

NEW 26-100 FIRE HEADQUARTERS

THIELLS 26 FD

65 W RAMAPO ROAD
GARNERVILLE, NY 10923

CONTRACT

CONTRACT P
PLUMBING CONSTRUCTION

STATUS

FINAL BID DOCUMENT

SHEET TITLE

PLUMBING DETAILS (1 OF 2)

DRAWING No.

P 500.00

C:\Users\mfellman\Documents_Revit Backup\TRFD2302_Central23-M_mfellman24CK2.rvt

2/25/2025 4:11:24 PM

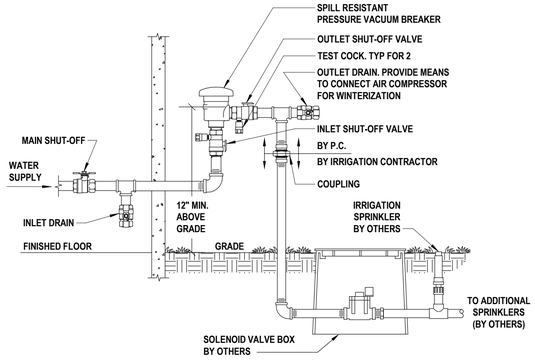

1 Lawn Irrigation Supply

SCALE: N.T.S.

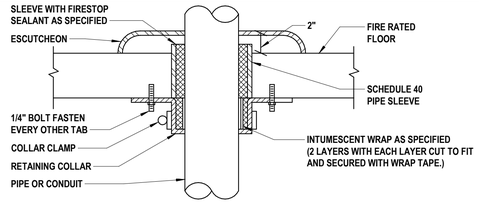

THROUGH FIRE RATED FLOOR

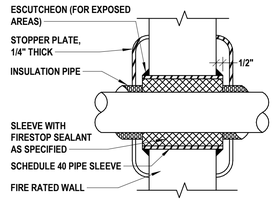

THROUGH FIRE RATED WALL

FIRE STOPPING NOTES:

1. CONTRACTOR SHALL BE RESPONSIBLE FOR ENSURING THAT PENETRATIONS ARE PROPERLY FIRE STOPPED WITH THE FOLLOWING:

1.A. THE FIRE STOPPING SYSTEM AND COMPONENTS SHALL BE AS MANUFACTURED BY 3M. NO SUBSTITUTIONS SHALL BE PERMITTED.

1.B. METAL PIPES OR CONDUIT THROUGH BLOCK WALL SHALL USE UL SYSTEM NO. CAJ1044 AND 3M PRODUCT CP25 WB & CAULK

1.C. METAL PIPES THROUGH GYPSUM WALLS SHALL USE UL SYSTEM NO. WL 1001 AND 3M PRODUCT CP 25 WB & CAULK

2 Pipe Penetration Through Rated Construction

SCALE: N.T.S.

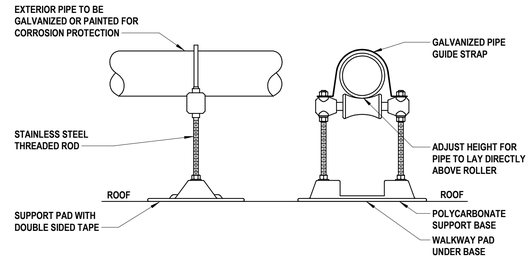

SUPPORT SPACING			
PIPE SIZE	DISTANCE	PIPE SIZE	DISTANCE
1/2"	6 FEET	1"	8 FEET
3/4"	8 FEET	>1"	10 FEET

3 Roof Pipe Support

SCALE: N.T.S.

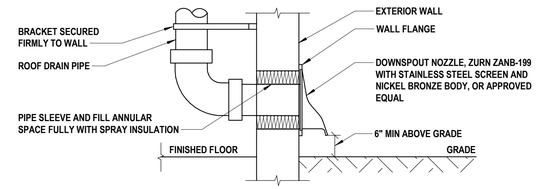

4 Storm Overflow Drain Outlet

SCALE: N.T.S.

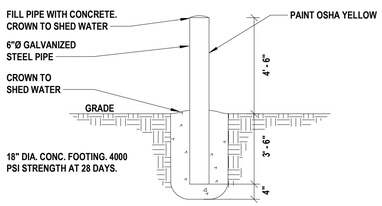

5 Bollard

SCALE: N.T.S.

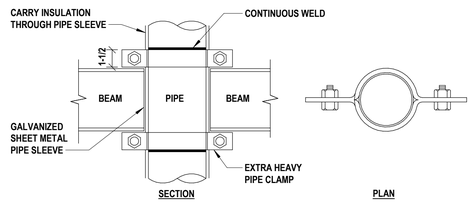

6 Typical Riser Anchor

SCALE: N.T.S.

H2M architects + engineers

538 Broad Hollow Road, 4th Floor East
Melville, NY 11747
631.756.8000 • www.h2m.com
NY Architecture & Landscape Architecture: No Certificate Required
NY Engineering Certificate of Authorization No.: 0018178

CONSULTANTS:

MARK	DATE	DESCRIPTION

STATE OF NEW YORK · JONATHAN RICHARD MURATORE · 096440-1 · LICENSED PROFESSIONAL ENGINEER

10/31/2027 Exp. Date

JONATHAN R. MURATORE, P.E.
NY PROFESSIONAL ENGINEER Lic. No. 096440

"IN ACCORDANCE WITH ARTICLE 145, SECTION 7209 OF THE NYS EDUCATION LAW, ALTERATION OF THIS DOCUMENT EXCEPT BY A LICENSED PROFESSIONAL IS ILLEGAL"

DESIGNED BY:	DRAWN BY:	CHECKED BY:	REVIEWED BY:
CRG	MPF/CRG	JRM	JRM

PROJECT No:	DATE:	SCALE:
TRFD 2302	FEBRUARY 2025	AS SHOWN

CLIENT

THIELLS ROSEVILLE FIRE DISTRICT

NEW 26-100 FIRE HEADQUARTERS

65 W RAMAPO ROAD
GARNERVILLE, NY 10923

CONTRACT

CONTRACT P
PLUMBING CONSTRUCTION

STATUS

FINAL BID DOCUMENT

SHEET TITLE

PLUMBING DETAILS (2 OF 2)

DRAWING No.

P 501.00

C:\Users\mfeltman\Documents_Revit Backup\TRFD2302_Central23-M_mfeltmanZ4DX2.rvt
2/25/2025 4:11:23 PM

ITEM NO.	QTY	DESCRIPTION	
1	1	BOOSTER	
2	1	INLET ISOLATION VALVE 6"	
3	1	INLET FLEXIBLE CONNECTOR 6"	
4	1	PRESSURE GAUGE 0-15" W.C	
5	1	PRESSURE GAUGE 0-30" W.C	
6	2	1/4" GAUGE COCK	
7	1	DISCH PRESSURE SWITCH (OPTIONAL)	
8	1	OUTLET FLEXIBLE CONNECTOR 4"	
9	1	OUTLET ISOLATION VALVE 4"	
10	1	SIMPLEX CONTROL PANEL	
11	1	EXPF ELECTRICAL JUNCTION BOX	
12	1	ECLIPSE CHECK VALVE 1060FA 6"	
13	1	LOW INLET GAS PRESSURE SWITCH	SEE NOTE #1
14	1	INLET FLANGED SPOOL	SEE NOTE #5
15	1	OUTLET FLANGED SPOOL	
16	1	UNI-STRUT CONTROL PANEL SUPPORT FRAME	
17	1	UNI-STRUT PIPING SUPPORT FRAME	
18	1	UNI-STRUT BASE FRAME	

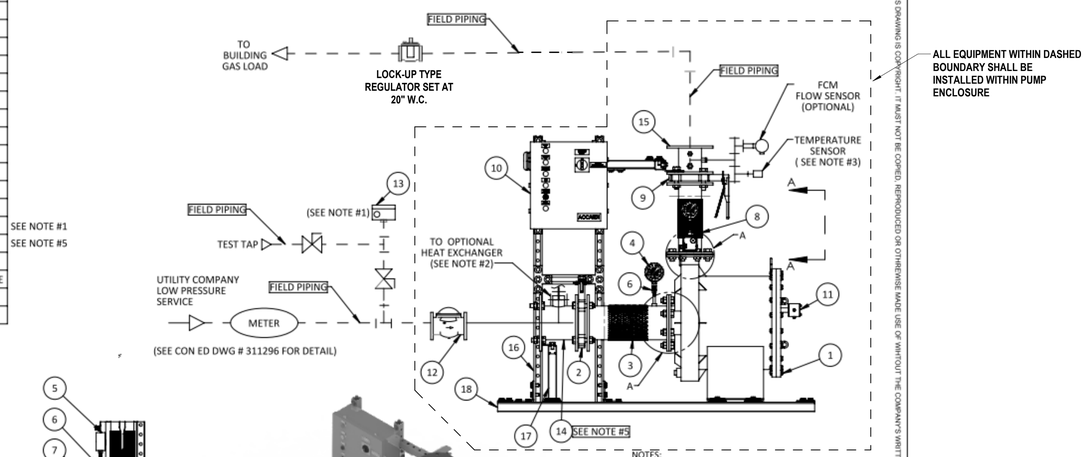

THIS DRAWING IS COPYRIGHT. IT MUST NOT BE COPIED, REPRODUCED OR OTHERWISE MADE USE OF WITHOUT THE COMPANY'S WRITTEN PERMISSION.

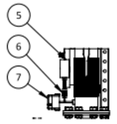

ELEVATION VIEW A-A

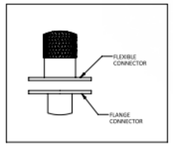

DETAIL A

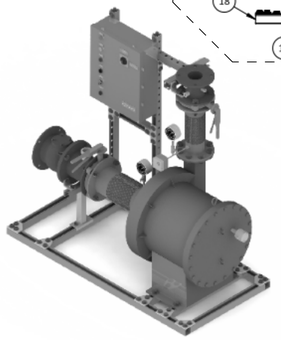

* NOT TO SCALE

NOTES:

(1) INLET LOW GAS PRESSURE SWITCH SHIPPED LOOSE FOR FIELD INSTALLATION BY OTHERS IN ACCORDANCE WITH CON EDISON SPECIFICATION G-2040-9

(2) SEE DRAWING DB308 FOR CONNECTION DETAIL FOR THE OPTIONAL HEAT EXCHANGER MODULE

(3) USED WITH HEAT EXCHANGER OPTION ONLY

(4) FINAL DIMENSIONS MAY VARY DEPENDING ON COMPONENT SELECTION AND ORIENTATION

(5) TEE CONNECTION FOR OPTIONAL HEAT EXCHANGER

MODEL: HB-4617-1

RATINGS/CAPACITIES:
23,000 CFH MAXIMUM
13" W.C. DIFFERENTIAL

ELECTRICAL: ☐ 115/1/60 ☐ 208/1/60 ☐ 208/3/60 ☐ 460/3/60
1 HP

PANEL: ☐ NEMA 4 ☐ NEMA 7

LOW PRESSURE SWITCH: ☐ NEMA 4 ☐ NEMA 7

OPTIONS:
- ☐ INT (ON DEMAND CONTROL, INTERLOCKS)
- ☐ HEX (RECIRCULATION HEAT EXCHANGER)
- ☐ VFD (VARIABLE SPEED CONTROL)
- ☐ FCM (AUTO FLOW CONTROL)
- ☐ PFCM (AUTO FLOW CONTROL)
- ☐ REG (DISCHARGE PRESSURE REGULATION)
- ☐ GLD (GAS LEAK DETECTION)
- ☐ UPS (BATTERY BACK UP POWER SUPPLY)

ACCARDI COMPANIES
INNOVATIVE COMBUSTION SOLUTIONS

ALL DIMENSIONS ARE IN INCHES	DRAWN BY: --
PAGE : 1 OF 1	DRAWN DATE: --
DRAWING TITLE: COMPAC HB SERIES PACKAGED HERMETICALLY HERMETICALLY SEALED GAS BOOSTER SYSTEM PIPING SCHEMATIC	REV: --
DRAWING NUMBER: HB 4617-1	

1 Gas Booster Pump Basis of Design

SCALE: N.T.S.

NOTES:

1. ABOVE REFERENCED PLAN IS THE BASIS OF DESIGN FOR THE GAS BOOSTER PUMP SYSTEM. CONTRACTOR SHALL PROVIDE ABOVE REFERENCED GAS BOOSTER SYSTEM BY ACCARDI COMPANIES OR APPROVED EQUAL.
2. GAS BOOSTER PUMP AND ASSOCIATED PIPING, FITTINGS, VALVES, SUPPORTS, ENCLOSURE, AND MATERIALS SHALL BE INCLUDED UNDER CONTRACT ALTERNATE P-04.

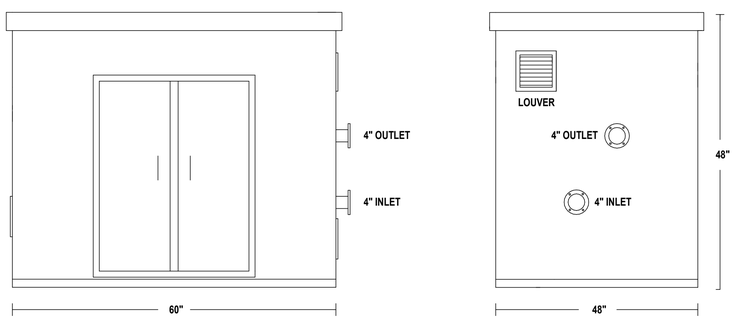

2 Gas Booster Pump Enclosure

SCALE: N.T.S.

NOTES:

1. GAS BOOSTER PUMP ENCLOSURE SHALL BE PAINTED STEEL WITH LOCKABLE DOOR AND SIDE LOUVERS.
2. ENCLOSURE SHALL BE OF THE SAME MANUFACTURER AS THE GAS BOOSTER SYSTEM.
3. GAS BOOSTER PUMP ENCLOSURE SHALL BE INCLUDED UNDER THE SCOPE OF CONTRACT ALTERNATE P-04.

H2M architects + engineers
538 Broad Hollow Road, 4th Floor East
Melville, NY 11747
631.756.8000 • www.h2m.com
NY Architecture & Landscape Architecture: No Certificate Required
NY Engineering Certificate of Authorization No.: 0018178

CONSULTANTS:

MARK	DATE	DESCRIPTION

STATE OF NEW YORK · JONATHAN RICHARD MURATORE · 096440-1 · LICENSED PROFESSIONAL ENGINEER

10/31/2027 Exp. Date

JONATHAN R. MURATORE, P.E.
NY PROFESSIONAL ENGINEER Lic. No. 096440

"IN ACCORDANCE WITH ARTICLE 145, SECTION 7209 OF THE NYS EDUCATION LAW, ALTERATION OF THIS DOCUMENT EXCEPT BY A LICENSED PROFESSIONAL IS ILLEGAL"

DESIGNED BY:	DRAWN BY:	CHECKED BY:	REVIEWED BY:
CRG	MPF/CRG	JRM	JRM

PROJECT No:	DATE:	SCALE:
TRFD 2302	FEBRUARY 2025	AS SHOWN

CLIENT

THIELLS ROSEVILLE FIRE DISTRICT

NEW 26-100 FIRE HEADQUARTERS

65 W RAMAPO ROAD
GARNERVILLE, NY 10923

CONTRACT

CONTRACT P
PLUMBING CONSTRUCTION

STATUS

FINAL BID DOCUMENT

SHEET TITLE

GAS BOOSTER PUMP DETAILS

DRAWING No.

P 502.00

C:\Users\mfeilman\Documents_Revit Backup\TRFD2302_Central23M_mfeilmanZ42X2.rvt

2/25/2025 4:11:26 PM

PLUMBING FIXTURE SCHEDULE

FIXTURE TAG	DESCRIPTION	BASIS OF DESIGN						MINIMUM CONNECTION SIZES							SPECIFICATION	REMARKS
		MAKE	MODEL	TRIM/FAUCET				COLD WATER		HOT WATER		DRAIN		VENT		
				MAKE	MODEL	OPERATION	MAX FLOW	SIZE	WFU	SIZE	WFU	SIZE	DFU			
LAV-1 (HC)	LAVATORY WASHSTATION - WALL MOUNT - ADA COMPLIANT - SINGLE BOWL	BRADLEY	LD-3010	BRADLEY	S53-3300	SENSOR	0.5 GPM	1/2"	0.5	1/2"	0.5	1-1/2"	1	1-1/2"	SINK: WALL MOUNTED WASHSTATION WITH DECK, INTEGRAL SINGLE BOWL, BACKSPLASH, FRONT APRON, FAUCET, AND SOAP DISPENSER. BRADLEY OMNIDECK OR APPROVED EQUAL. DECK SHALL BE 30"L X 22"D AND SHALL HAVE A TERREON SOLID SURFACE WITH INTEGRAL RECTANGULAR BOWL. BOWL SHALL BE BRADLEY MODEL WB-TR1 UNDERMOUNT TYPE IN ALPINE WHITE FINISH OR APPROVED EQUAL. SOAP DISPENSER SHALL BE BRADLEY MODEL 6-3300 WITH AC POWER ADAPTER OR APPROVED EQUAL. PROVIDE 3" SIDE SPLASH ON "WALL SIDE" AND 3" SIDE APRON WITH GUSSET ON "OPEN SIDE" OF WASHSTATION AT ALL CORNER INSTALLATIONS. PROVIDE THE FOLLOWING ADDITIONAL OPTIONS AT EACH WASHSTATION: "EASE EDGE" EDGE STYLE, CENTER FAUCET HOLE WITH SOAP... FAUCET: DECK MOUNTED, ADA COMPLIANT, SENSOR ACTIVATION WITH 0.5 GPM AERATOR AND THERMOSTATIC MIXING ASSEMBLY. PROVIDE BRADLEY MODEL VA13-029 AC ADAPTER. COMPLIES WITH ASME A112.18.1 AND NSF 372.	PROVIDE BRASS ANGLE STOP VALVES WITH FLEXIBLE STAINLESS STEEL SUPPLIES, AND 1-1/2" BRASS P-TRAP. HOT WATER SHALL NOT EXCEED 105°F. PROVIDE DECK-MOUNTED SOAP DISPENSER WITH SENSOR ACTIVATION, TOP FILL, BRADLEY MODEL 6-3300 OR APPROVED EQUAL WITH BRADLEY MODEL A14-029 AC ADAPTER. INSULATE ALL EXPOSED DRAIN AND SUPPLY PIPING WITH TRUBRO LAVGUARD.
LAV-2 (HC)	LAVATORY WASHSTATION - WALL MOUNT - ADA COMPLIANT - DOUBLE BOWL	BRADLEY	LD-3010	BRADLEY	S53-3300	SENSOR	0.5 GPM	1/2"	0.5	1/2"	0.5	1-1/2"	1	1-1/2"	SINK: WALL MOUNTED WASHSTATION WITH DECK, INTEGRAL SINGLE BOWL, BACKSPLASH, FRONT APRON, FAUCET, AND SOAP DISPENSER. BRADLEY OMNIDECK OR APPROVED EQUAL. DECK SHALL BE 30"L X 22"D AND SHALL HAVE A TERREON SOLID SURFACE WITH INTEGRAL RECTANGULAR BOWL. BOWL SHALL BE BRADLEY MODEL WB-TR1 UNDERMOUNT TYPE IN ALPINE WHITE FINISH OR APPROVED EQUAL. SOAP DISPENSER SHALL BE BRADLEY MODEL 6-3300 WITH AC POWER ADAPTER OR APPROVED EQUAL. PROVIDE 3" SIDE SPLASH ON "WALL SIDE" AND 3" SIDE APRON WITH GUSSET ON "OPEN SIDE" OF WASHSTATION AT ALL CORNER INSTALLATIONS. PROVIDE THE FOLLOWING ADDITIONAL OPTIONS AT EACH WASHSTATION: "EASE EDGE" EDGE STYLE, CENTER FAUCET HOLE WITH SOAP... FAUCET: DECK MOUNTED, ADA COMPLIANT, SENSOR ACTIVATION WITH 0.5 GPM AERATOR AND THERMOSTATIC MIXING ASSEMBLY. PROVIDE BRADLEY MODEL A13-029 AC ADAPTER. COMPLIES WITH ASME A112.18.1 AND NSF 372.	PROVIDE BRASS ANGLE STOP VALVES WITH FLEXIBLE STAINLESS STEEL SUPPLIES, AND 1-1/2" BRASS P-TRAP. HOT WATER SHALL NOT EXCEED 105°F. PROVIDE DECK-MOUNTED SOAP DISPENSER WITH SENSOR ACTIVATION, TOP FILL, BRADLEY MODEL 6-3300 OR APPROVED EQUAL WITH BRADLEY MODEL A14-029 AC ADAPTER. INSULATE ALL EXPOSED DRAIN AND SUPPLY PIPING WITH TRUBRO LAVGUARD.
LAV-3 (HC)	LAVATORY WASHSTATION - WALL MOUNT - ADA COMPLIANT - SINGLE BOWL - CUSTOM DECK	BRADLEY	LD-3010	BRADLEY	S53-3300	SENSOR	0.5 GPM	1/2"	0.5	1/2"	0.5	1-1/2"	1	1-1/2"	SINK: WALL MOUNTED WASHSTATION WITH DECK, INTEGRAL SINGLE BOWL, BACKSPLASH, FRONT APRON, FAUCET, AND SOAP DISPENSER. BRADLEY OMNIDECK OR APPROVED EQUAL. DECK SHALL BE 30"L X 22"D AND SHALL HAVE A TERREON SOLID SURFACE WITH INTEGRAL RECTANGULAR BOWL. BOWL SHALL BE BRADLEY MODEL WB-TR1 UNDERMOUNT TYPE IN ALPINE WHITE FINISH OR APPROVED EQUAL. SOAP DISPENSER SHALL BE BRADLEY MODEL 6-3300 WITH AC POWER ADAPTER OR APPROVED EQUAL. PROVIDE 3" SIDE SPLASH ON "WALL SIDE" AND 3" SIDE APRON WITH GUSSET ON "OPEN SIDE" OF WASHSTATION AT ALL CORNER INSTALLATIONS. PROVIDE THE FOLLOWING ADDITIONAL OPTIONS AT EACH WASHSTATION: "EASE EDGE" EDGE STYLE, CENTER FAUCET HOLE WITH SOAP... FAUCET: DECK MOUNTED, ADA COMPLIANT, SENSOR ACTIVATION WITH 0.5 GPM AERATOR AND THERMOSTATIC MIXING ASSEMBLY. PROVIDE BRADLEY MODEL A13-029 AC ADAPTER. COMPLIES WITH ASME A112.18.1 AND NSF 372.	PROVIDE BRASS ANGLE STOP VALVES WITH FLEXIBLE STAINLESS STEEL SUPPLIES, AND 1-1/2" BRASS P-TRAP. HOT WATER SHALL NOT EXCEED 105°F. PROVIDE DECK-MOUNTED SOAP DISPENSER AT EACH FAUCET WITH SENSOR ACTIVATION, TOP FILL, BRADLEY MODEL 6-3300 OR APPROVED EQUAL WITH BRADLEY MODEL A14-029 AC ADAPTER. INSULATE ALL EXPOSED DRAIN AND SUPPLY PIPING WITH TRUBRO LAVGUARD.
LAV-4 (HC)	SURGICAL SCRUB SINK - WALL MOUNT - ADA COMPLIANT	WHITEHALL	4121ADA-MC-EFW-SWV	WHITEHALL	- - -	SENSOR	0.5 GPM	1/2"	0.5	1/2"	0.5	1-1/2"	1	1-1/2"	SINK: WALL MOUNTED SCRUB SINK WITH TYPE 304 STAINLESS STEEL CABINET, INTEGRAL SENSOR FAUCET WITH TEMPERATURE/PRESSURE BALANCING MIXING VALVE, 1-1/2" P TRAP WITH 3" FLAT STRAINER DRAIN, EYE/FACE WASH WITH EMERGENCY MIXING VALVE (WHITEHALL ET71-1 OR APPROVED EQUAL) AND SWIVEL NOZZLE ON GOOSENECK, AND REMOVABLE FRONT ACCESS PANEL ON CABINET. FAUCET: INTEGRAL TO SINK	PROVIDE BRASS ANGLE STOP VALVES WITH FLEXIBLE STAINLESS STEEL SUPPLIES, AND 1-1/2" BRASS P-TRAP. MAXIMUM WATER TEMPERATURE FROM FAUCET SHALL NOT EXCEED 105°F.
WC-1 (HC)	WATER CLOSET - WALL MOUNTED - ADA COMPLIANT - TOP SPUD	KOHLER	K-84325	AMERICAN STANDARD	606B.121	SENSOR	1.28 GPF	1"	10	- - -	- - -	3"	4	1-1/2"	TOILET: VITREOUS CHINA, 12-INCH ROUGH-IN, ADA COMPLIANT, ELONGATED BOWL, TOILET SEAT, WATER SENSE, SIPHON JET, COMPLIES WITH ASME A112.19.2. PROVIDE TOILET SEAT CHURCH 295CT OR APPROVED EQUAL. MINIMUM OF 25 PSI. FLUSH VALVE: FLUSH VALVE: EXPOSED SENSOR FLUSHOMETER, POLISHED CHROME, ADA COMPLIANT, VANDAL RESISTANT. COMPLIES WITH ASSE 1037. PROVIDE AMERICAN STANDARD MODEL PK00.HAC POWER KIT.	COORDINATE GRAB BAR HEIGHT WITH FLUSH VALVE.
UR-1 (HC)	URINAL - WALL MOUNTED - ADA COMPLIANT - TOP SPUD	KOHLER	K-4991-ET	AMERICAN STANDARD	606B.013	SENSOR	0.125 GPF	3/4"	5	- - -	- - -	3"	4	3/4"	URINAL: VITREOUS CHINA, ADA HEIGHT, WALL MOUNTED, ASME A112.19.2. FLUSH VALVE: EXPOSED SENSOR FLUSHOMETER, POLISHED CHROME, ADA COMPLIANT, VANDAL RESISTANT. COMPLIES WITH ASSE 1037. PROVIDE AMERICAN STANDARD MODEL PK00.HAC POWERKIT AND NO PIPE SEALANT ALLOWED.	PROVIDE CARRIER SUPPORT WATTS CA-311 OR APPROVED EQUAL.
DF-1 (HC)	DRINKING FOUNTAIN - WALL MOUNTED - ADA COMPLIANT	SLOAN	DRS110-FIL-REF-SS	- - -	- - -	MANUAL / SENSOR	8 GPH	1/2"	0.25	- - -	- - -	1-1/4"	0.5	1-1/2"	SINGLE LIGHT GREY WATER COOLER. REQUIRES (1) ELECTRICAL RECEPTACLES. COMPLIES WITH ASME A112.19.3 AND NSF 61.	PROVIDE SERVICE STOP WITH ACCESS AND ADDITIONAL FILTER (SLOAN FC-3000)
MS-1	MOP SINK - FLOOR MOUNTED	ADVANCE TABCO	9-OP-40DF	ADVANCE TABCO	K-240	MANUAL	9.6 GPM	3/4"	2.25	3/4"	2.25	3"	2	1-1/2"	DROP-FRONT ONE-PIECE MOP SINK, STAINLESS STEEL 3" DRAIN BODY WITH STRAINER. BRASS CHROME PLATED SERVICE FAUCET WITH VACUUM BREAKER, INTEGRAL STOPS, ADJUSTABLE WALL SUPPORT BRACKET, PAIL HOOK AND 3/4" HOSE THREAD ON SPOUT. COMPLIES WITH ASME A112.18.2.	PROVIDE STAINLESS STEEL SIDE AND BACK SPLASHES (ADVANCE TABCO K-298), HOSE AND HOSE HANGER (ADVANCE TABCO K-244), AND 3" P-TRAP.
SK-1	SINK - STAINLESS - ONE COMPARTMENT - DRAINBOARD	ADVANCE TABCO	FC-1-1824-18R	ADVANCE TABCO	K-112	MANUAL	2.2 GPM	3/4"	2.25	3/4"	2.25	2"	2	2"	SINK: FREESTANDING, 16-GAUGE 304 STAINLESS STEEL SINK WITH DRAINBOARD, TILE EDGE BACKSPLASH, ROLLED RIM EDGE. NSF CERTIFIED. FAUCET: BRASS CHROME PLATED BODY WITH CHROME PLATED HANDLES, 12" SWING SPOUT. COMPLIES WITH ASME A112.18.1M.	PROVIDE BRASS ANGLE STOP VALVES WITH FLEXIBLE STAINLESS STEEL SUPPLIES, AND 1-1/2" BRASS P-TRAP.
SK-2	SINK - UNDERMOUNT - SINGLE BOWL	KOHLER	K-3894	KOHLER	K-22973	MANUAL	1.5 GPM	3/4"	2.25	3/4"	2.25	2"	2	2"	SINK: UNDERMOUNT, 18-GAUGE STAINLESS STEEL SINK. BOWL SHALL HAVE DIMENSIONS OF 16" W X 22" L X 6" D. POLISHED SATIN FINISH. COMPLIES WITH ASME A112.19.3 AND ADA REQUIREMENTS. FAUCET: PLOISHED CHROME WITH SINGLE LEVER HANDLE, HIGH ARCH SPOUT. COMPLIES WITH NSF 61 & 372, AND ASME A112.18.1	PROVIDE BRASS ANGLE STOP VALVES WITH FLEXIBLE STAINLESS STEEL SUPPLIES, AND 1-1/2" BRASS P-TRAP.
WF-1	WASH FOUNTAIN - ADA COMPLIANT - BACKSPLASH - FOOT ACTIVATED	BRADLEY	WF2704	- - -	- - -	MANUAL	1.0 GPM	1/2"	2.25	1/2"	2.25	2"	2	1-1/2"	SEMI-CIRCULAR WASHFOUNTAIN, 14 GAUGE STAINLESS STEEL, OFF-LINE VENT WITH SUPPLIES FROM BELOW. STANDARD HEIGHT, FOOT ACTIVATION, THERMOSTATIC MIXING VALVE, METAL-CLAD LIQUID SOAP DISPENSER, STAINLESS STEEL BACKSPLASH. COMPLIES WITH ASME A112.18.1.	PROVIDE 2" P TRAP.
SH-1	SHOWER BASE - 36" x 36" - ADA COMPLIANT - TRENCH DRAIN - SHOWER FAUCET	INPRO	FRONT TRENCH DRAIN SHOWER BASE	KOHLER	SEE REMARKS	MANUAL	2 GPM	1/2"	3	1/2"	3	2"	2	1-1/2"	PAN: TRANSFER SHOWER PAN, ACRYLIC, WITH INTEGRAL TRENCH DRAIN, ANSI Z124, ALCOVE TYPE, WITH NON SLIP BOTTOM, 1/4" THRESHOLD. SHOWER: TRIM PACKAGE: KOHLER K-TS35320-4, SHOWER KIT:K-76471-G, 1.75 GPM WATERSENSE SHOWER HEAD & HAND SHOWER, 60" RIBBON HOSE, FAUCET TRIM WITH LEVER HANDLE. ROUGH VALVE BODY:K-28304-KS, UNIVERSAL ROUGH VALVE BODY WITH DIVERTER VALVE ROUGH IN. ALL FAUCET PARTS TO COMPLY WITH ADA REGULATIONS, ASME A112.18.1, AND APPROVED EQUAL.	
SH-2	SHOWER BASE - 60" x 30" - ADA COMPLIANT - TRENCH DRAIN - SHOWER FAUCET	INPRO	FRONT TRENCH DRAIN SHOWER BASE	KOHLER	SEE REMARKS	MANUAL	2 GPM	1/2"	3	1/2"	3	2"	2	1-1/2"	PAN: TRANSFER SHOWER PAN, ACRYLIC, WITH INTEGRAL TRENCH DRAIN, ANSI Z124, ALCOVE TYPE, WITH NON SLIP BOTTOM, 1/4" THRESHOLD. SHOWER: TRIM PACKAGE: KOHLER K-TS35320-4, SHOWER KIT:K-76471-G, 1.75 GPM WATERSENSE SHOWER HEAD & HAND SHOWER, 60" RIBBON HOSE, FAUCET TRIM WITH LEVER HANDLE. ROUGH VALVE BODY:K-28304-KS, UNIVERSAL ROUGH VALVE BODY WITH DIVERTER VALVE ROUGH IN. ALL FAUCET PARTS TO COMPLY WITH ADA REGULATIONS, ASME A112.18.1, AND APPROVED EQUAL.	
VB-1	WATER SUPPLY VALVE BOX - DOUBLE	SIOUX CHIEF	696-G2(R) SERIES (R) DENOTES FIRE RATING	- - -	- - -	MANUAL	- - -	1/2"	1	1/2"	1	2"	2	2"	LAUNDRY SUPPLY BOX WITH WATER HAMMER ARRESTOR. 1/2" CW AND HW SUPPLY CONNECTIONS WITH 1/4 TURN BALL VALVE. PROVIDE FIRE RATED ENCLOSURE WHEN INSTALLED IN FIRE RATED WALLS. 2" DRAIN OUTLET CONNECTION. DRAIN SHALL BE SECURED TO BOX.	PROVIDE 18" DEEP SEAL TRAP FOR SUDS ZONE.
VB-1	WATER SUPPLY VALVE BOX - SINGLE	SIOUX CHIEF	696-G1(R) SERIES (R) DENOTES FIRE RATING	- - -	- - -	MANUAL	- - -	1/2"	0.25	- - -	- - -	- - -	- - -	- - -	ICE MAKER SUPPLY BOX WITH WATER HAMMER ARRESTOR. 1/2" CW SUPPLY CONNECTION WITH 1/4 TURN BALL VALVE. PROVIDE FIRE RATED ENCLOSURE WHEN INSTALLED IN FIRE RATED WALLS.	
HB-1	HOSE BIBB - INTERIOR WITH KEY	WOODFORD	24P-3/4	- - -	- - -	MANUAL	- - -	3/4"	- - -	- - -	- - -	- - -	- - -	- - -	WALL FAUCET WITH ASSE STANDARD 1011 APPROVED ANTI-SIPHON VACUUM BREAKER, 3/4" MALE HOSE THREAD OUTLET SPOUT, LOOSE TEE KEY HANDLE.	
HB-2	WALL HYDRANT - FROST FREE	WOODFORD	MB65	- - -	- - -	MANUAL	- - -	3/4"	- - -	- - -	- - -	- - -	- - -	- - -	FREEZELESS WALL HYDRANT WITH ASSE STANDARD 1011 APPROVED VACUUM BREAKER, 3/4" MALE HOSE THREAD OUTLET SPOUT, ALL BRASS, TEE KEY OPERATED.	
HR-1	HOSE REEL - WATER - WALL MOUNTED	HANNAY	1816-17-18	- - -	- - -	MANUAL	- - -	1	- - -	- - -	- - -	- - -	- - -	- - -	MANUAL REWIND HOSE REEL. UNIT TO HAVE 1" FEMALE NPT INLET CONNECTED TO 90 DEGREE BALL BEARING SWIVEL JOINT, 3/4" FEMALE NPT OUTLET, CAM-LOCK DRAG BRAKE, SPRING ACTUATED PIN LOCK. REEL TO HAVE CAPACITY TO STORE 50 FT OF 1-9/32" O.D. HOSE. HOSE TO BE RMA CLASS A BLACK NITRILE WITH SYNTHETIC YARN REINFORCEMENT AND RMA CLASS B RED NBR BLEND COVER. HOSE SHALL HAVE AN I.D. OF 3/4", A MAXIMUM O.D. OF 1-9/32", AND BE RATED TO 3...	FOR EACH REEL, PROVIDE 50' OF HOSE LENGTH WITH 3/4" MALE NPT FITTING AT EACH END, MAKE FINAL CONNECTION TO REEL INLET WITH FLEXIBLE CONNECTOR. PROVIDE ASSE 1022 COMPLIANT VACUUM BREAKER AT FINAL...
HR-2	HOSE REEL - AIR - CEILING MOUNTED	HANNAY	N716-19-20-10.5J	- - -	- - -	MANUAL	- - -	1	- - -	- - -	- - -	- - -	- - -	- - -	SPRING REWIND HOSE REEL. UNIT TO HAVE 1/2" FEMALE NPT INLET CONNECTED TO 90 DEGREE BALANCED PRESSURE SWIVEL JOINT, 1/2" FEMALE NPT OUTLET, DECLUTCHING ARBOR TO PREVENT DAMAGE FROM REVERSE WINDING, AND 4-WAY ROLLER ASSEMBLY. REEL TO HAVE CAPACITY TO STORE 50 FEET OF 3/4" O.D. HOSE. HOSE TO BE RMA CLASS A BLACK NITRILE WITH SYNTHETIC YARN REINFORCEMENT AND RMA CLASS B RED NBR BLEND COVER. HOSE SHALL HAVE AN I.D. OF 3/8", A MAXIMUM O.D. OF 3/4", AND BE RATED TO 300 PSI.	PROVIDE UNIT WITH "VR" ROLLER POSITION. FOR EACH REEL, PROVIDE 50' OF HOSE LENGTH WITH 1/2" MALE NPT FITTTING AT INLET END, QUICK CONNECT FITTING AND HOSE STOP AT OUTLET END. MAKE FINAL CONNECTION TO REEL INLET WITH 12" FLEXIBLE STAINLESS STEEL CONNECTOR.
PF-1	POT FILL - WALL MOUNT	KROWNE	16-182L	- - -	- - -	MANUAL	- - -	1/2"	0.5	- - -	- - -	- - -	- - -	- - -	POT FILL: SOLID CHROME PLATED BRASS UNIT TO HAVE 1/2" MALE NPS INLET CONNECTED TO 24" SWING SPOUT. 1/4 TURN SINGLE CHROME PLATED LEVER HANDLE.	
FS-1	FLOOR SINK	ZURN	Z1900	- - -	- - -	- - -	- - -	- - -	- - -	- - -	- - -	- - -	2	2"	FLOOR SINK: WHITE ACID RESISTANT PORCELAIN ENAMEL COATED INTERIOR, LOOSE SET PORCELAIN ENAMEL COATED CAST 3/4 IRON GATE, POLYPROPYLENE DOME BOTTOM STRAINER, NO HUB OUTLET.	PROVIDE TRAP SEALS: ZURN Z1072. SEE PLANS FOR SIZES.
FD-1	FLOOR DRAIN (CONCRETE FLOORS)	ZURN	ZB415-BZ1-VP	- - -	- - -	- - -	- - -	- - -	- - -	- - -	- - -	- - -	2	2"	FLOOR DRAIN: DURA-COATED CAST IRON BODY. POLISHED BRONZE TOP AND VANDAL PROOF SECURED TOP.	PROVIDE TRAP SEALS: ZURN Z1072. SEE PLANS FOR SIZES.
TD-1	APPARATUS BAY TRENCH DRAIN	WATTS	ES-WD-DEADLEVEL-D	- - -	- - -	- - -	- - -	- - -	- - -	- - -	- - -	4"	- - -	2"	DRAIN TROUGH WITH LENGTHS SEGMENTED INTO INSIDE DIMENSIONS 48"L X 6"W WITH DEPTH AND CONFIGUARTION AS SPECIFIED BY MANUFACTURER. DUCTILE IRON FRAME WITH UV-STABILIZED POLYPROPELENE CHANNELS. INCLUDES FRAME CONNECTORS, GRATE LOCKDOWNS, AND CONSTRUCTION COVERS AND END-OUTLETS.	PROVIDE 4" PVC P-TRAP AND ADDITIONAL WIRE STRAINER BASKET, REMOVABLE FOR CLEANING, THAT PREVENTS PASSAGE OF SOLIDS 1/2" OR LARGER IN SIZE.
TD-2	WASHER-EXTRACTOR TROUGH DRAIN	STREIM	TT-4	- - -	- - -	- - -	- - -	- - -	- - -	- - -	- - -	4"	- - -	2"	DRAIN TROUGH WITH INSIDE DIMENSIONS 48"L X 18"W X 12"D. 3/4" POLYETHYLENE PROTECTIVE CASING WITH REMOVABLE, CORROSION-RESISTANT FILTER SCREEN AND SECONDARY FILTER BASKET. INCLUDES PLAIN END OUTLET.	PROVIDE 4" PVC P-TRAP AND ADDITIONAL WIRE STRAINER BASKET, REMOVABLE FOR CLEANING, THAT PREVENTS PASSAGE OF SOLIDS 1/2" OR LARGER IN SIZE.
RD-1	ROOF DRAIN - COMBINATION	ZURN	Z164-G-VP	- - -	- - -	- - -	- - -	- - -	- - -	- - -	- - -	- - -	- - -	- - -	12" DIAMETER COMBINATION ROOF DRAIN WITH 4-INCH DAM. DURA-COATED CAST IRON BODY AND DOME.	PROVIDE EXTENSION COLLARS AS REQUIRED TO ACCOMMODATE THICKNESS OF ROOF IINSULATION. REFER TO ARCHITECTURAL PLANS FOR HEIGHTS. SEE PLANS FOR OUTLET SIZES.

NOTES:

1. HC REPRESENTS HANDICAPPED PLUMBING FIXTURE. REFER TO ARCHITECTURAL PLANS FOR MOUNTING HEIGHTS FOR ACCESSIBLE FIXTURES.
2. ALL ELECTRONICALLY OPERATED PLUMBING FIXTURES SHALL BE HARD WIRED.

C:\Users\mfeltman\Documents_Revit Backup\TRFD2302_Central23-M_mfeltman24zXr2.rvt

2/25/2025 4:11:27 PM

H2M architects + engineers

538 Broad Hollow Road, 4th Floor East
Melville, NY 11747
631.756.8000 • www.h2m.com
NY Architecture & Landscape Architecture: No Certificate Required
NY Engineering Certificate of Authorization No.: 0018178

CONSULTANTS:

MARK	DATE	DESCRIPTION

STATE OF NEW YORK · JONATHAN RICHARD MURATORE · 096440-1 · LICENSED PROFESSIONAL ENGINEER

10/31/2027
Exp. Date

JONATHAN R. MURATORE, P.E.
NY PROFESSIONAL ENGINEER Lic. No. 096440

"IN ACCORDANCE WITH ARTICLE 145, SECTION 7209 OF THE NYS EDUCATION LAW, ALTERATION OF THIS DOCUMENT EXCEPT BY A LICENSED PROFESSIONAL IS ILLEGAL"

DESIGNED BY:	DRAWN BY:	CHECKED BY:	REVIEWED BY:
CRG	JWC	JRM	JRM
PROJECT No: TRFD 2302	DATE: FEBRUARY 2025	SCALE: AS SHOWN	

CLIENT

THIELLS ROSEVILLE FIRE DISTRICT

NEW 26-100 FIRE HEADQUARTERS

THIELLS 26 FD

65 W RAMAPO ROAD GARNERVILLE, NY 10923

CONTRACT

CONTRACT P PLUMBING CONSTRUCTION

STATUS

FINAL BID DOCUMENT

SHEET TITLE

PLUMBING SCHEDULES (1 OF 2)

DRAWING No.

P 600.00

KITCHEN PLUMBING FIXTURE SCHEDULE (FURNISHED BY OTHERS)

FIXTURE TAG	DESCRIPTION	BASIS OF DESIGN						MINIMUM CONNECTION SIZES							REMARKS
		MAKE	MODEL	TRIM/FAUCET				COLD WATER		HOT WATER		DRAIN		VENT	
				MAKE	MODEL	OPERATION	MAX FLOW	SIZE	WFU	SIZE	WFU	SIZE	DFU		
SK-3	TWO COMPARTMENT SINK	---	---	---	---	---	1.5 GPM	3/4"	2.25	3/4"	2.25	2"	2	2"	PROVIDE BRASS ANGLE STOP VALVES WITH FLEXIBLE STAINLESS STEEL SUPPLIES, AND 1-1/2" BRASS P-TRAP.
KS-1	THREE COMPARTMENT BAR SINK	KROWNE	KR19-63C	KROWNE	INCLUDED WITH SINK	MANUAL	2.2 GPM	3/4"	2.25	3/4"	2.25	2"	2	2"	PROVIDE BRASS ANGLE STOP VALVES WITH FLEXIBLE STAINLESS STEEL SUPPLIES. PIPE TO DRAIN INDIRECTLY TO NEAREST FLOOR SINK.
KS-2	THREE COMPARTMENT DISHWASHING SINK	JOHN BOOS	3B18244-2D24	KROWNE	18-706L	MANUAL	1.15 GPM	3/4"	2.25	3/4"	2.25	2"	2	2"	PROVIDE BRASS ANGLE STOP VALVES WITH FLEXIBLE STAINLESS STEEL SUPPLIES. PIPE TO DRAIN INDIRECTLY TO NEAREST FLOOR SINK.
KS-3	TWO COMPARTMENT DROP-IN FOOD PREP SINK	JOHN BOOS	PB-DISINK141610-2	T&S BRASS	B-0320	MANUAL	2.2 GPM	3/4"	2.25	3/4"	2.25	2"	2	2"	PROVIDE BRASS ANGLE STOP VALVES WITH FLEXIBLE STAINLESS STEEL SUPPLIES. PIPE TO DRAIN INDIRECTLY TO NEAREST FLOOR SINK.
KS-4	HAND SINK - ADA COMPLIANT	JOHN BOOS	PBHS-ADA-P-STD	JOHN BOOS	INCLUDED WITH SINK	MANUAL	0.5 GPM	1/2"	0.5	1/2"	0.5	1-1/2"	1	1-1/2"	PROVIDE BRASS ANGLE STOP VALVES WITH FLEXIBLE STAINLESS STEEL SUPPLIES, AND 1-1/2" BRASS P-TRAP.

NOTES:

1. HC REPRESENTS HANDICAPPED PLUMBING FIXTURE. REFER TO ARCHITECTURAL PLANS FOR MOUNTING HEIGHTS FOR ACCESSIBLE FIXTURES.
2. ALL ELECTRONICALLY OPERATED PLUMBING FIXTURES SHALL BE HARD WIRED.

WATER HEATER SCHEDULE

EQUIPMENT NO.	LOCATION	TYPE	EQUIPMENT SPECIFICATIONS				BASIS OF DESIGN INFORMATION								EXPANSION TANK		SPECIFICATIONS	REMARKS
							GAS FIRED WATER HEATER											
			STORAGE	MAKE	MODEL	DIMENSIONS Ø x H (IN.)	GAS INPUT (BTU)	GAS PRESSURE (IN. W.C.)	GAS CONNECTION	FLUE SIZE	RECOVER AT 100°F RISE	WATER CONNECTION	GAS CONNECTION	EFFICIENCY	MAKE	MODEL		
WH-1	UTILITY	GAS-FIRED	119 GAL	A.O. SMITH	BTH-300MXi	33.1 x 75.8	300,000	5 - 14	1 1/2"	4"	332 GAL.	1 1/2"	1 1/2"	96%	AMTROL	ST-12	NATURAL GAS WATER HEATER SHALL CONTAIN MODULATING, DOWN-FIRED POWER BURNER, POWERED, NON-SACRIFICIAL ANODES, SEAMLESS GLASS-LINED STEEL TANK, FOAM INSULATION, CSA CERTIFIED AND ASME RATED T&P RELIEF VALVE, AND SHALL BE APPROVED FOR 0" CLEARANCE TO COMBUSTIBLES. CONTROL SHALL BE AN INTEGRATED SOLID-STATE TEMPERATURE AND IGNITION CONTROL DEVICE WITH INTEGRAL DIAGNOSTICS, GRAPHIC USER INTERFACE, FAULT HISTORY DISPLAY, AND SHALL HAVE DIGITAL TEMPERATURE READOUT. WATER HEATER SHALL COMPLY WITH ANSI Z21.10.3 - CSA 4.3, SHALL MEET THE U.S. DEPARTMENT OF ENERGY THERMAL EFFICIENCY AND STANDBY LOSS REQUIREMENTS AND CURRENT EDITION ASHRAE/IES 90.1, AND SHALL COMPLY WITH SCAQMD RULE 1146.2.	PROVIDE CONCENTRIC VENT KIT, ALARM BELL, AND CONDENSATE NEUTRALIZATION KIT.

PUMP SCHEDULE

EQUIPMENT NO.	LOCATION	TYPE	SERVICE	FLOW RATE	TDH	RPM	HP (EA)	PHASE	CYCLE	VOLTAGE	SPECIFICATIONS	REMARKS
CP-1	UTILITY	SIMPLEX	HOT WATER RECIRC	3 GPM	4 FT	3250	1/40	1	60 HZ	115 V	STAINLESS STEEL CASING, STAINLESS STEEL REPLACEABLE CARTRIDGE, DIRECT DRIVE, LOW POWER CONSUMPTION, SELF LUBRICATING WITH NO MECHANICAL SEAL, STAINLESS STEEL THREADED CONNECTIONS, PUMP TO BE NSF/ANSI 61 & 372 CERTIFIED	PROVIDE NSF APPROVED TACO PUMP MODEL 006 WITH TACO AQUASTAT MODEL 563-2
CP-2	UTILITY	SIMPLEX	TEMPERED WATER RECIRC	3 GPM	8 FT	3250	1/25	1	60 HZ	115 V	STAINLESS STEEL CASING, STAINLESS STEEL REPLACEABLE CARTRIDGE, DIRECT DRIVE, LOW POWER CONSUMPTION, SELF LUBRICATING WITH NO MECHANICAL SEAL, STAINLESS STEEL THREADED CONNECTIONS, PUMP TO BE NSF/ANSI 61 & 372 CERTIFIED	PROVIDE NSF APPROVED TACO PUMP MODEL 007 WITH TACO AQUASTAT MODEL 563-2
EP-1	ELEVATOR PIT	SIMPLEX SUBMERSIBLE	ELEVATOR PIT	50 GPM	50 FT	3450	.5	1	60 HZ	115 V	PROVIDE CAST IRON, POWDER COATED EPOXY FINISHED SUBMERSIBLE TYPE PUMP. MOTOR SHALL BE HERMETICALLY SEALED & OPERATE IN DIELECTRIC OIL. MOTOR SHALL HAVE INTERNAL AUTOMATIC RESETTING AND THERMAL OVERLOAD PROTECTION. IMPELLER SHALL BE BRONZE AND OF VORTEX NON-CLOG DESIGN. PUMP SWITCH SHALL BE INDUSTRIAL GRADE WITH 20 AMP RELAY AND 304 STAINLESS STEEL SENSOR PROBES TO DETECT WATER LEVEL AND THE PRESENCE OF OIL AND OR HYDROCARBONS, ALARM PANEL SHALL SOUND AUDIBLE AND VISUAL ALARM UPON DETECTION OF OIL OR HIGH WATER LEVEL CONDITIONS	PROVIDE ZOELLER PREPACKAGED SYSTEM, MODEL 940-0013, OIL SMART. PROVIDE 115V PIGGYBACK POWER PLUG AND CHECK VALVE ON PUMP DISCHARGE.
GP-1	SEE SITE PLAN	SIMPLEX	NATURAL GAS	23,000 CFH	13" W.C.	-	1	3	60 HZ	208 V	SEE SPECIFICATION SECTION # 223302	PROVIDE EXTERIOR-RATED STEEL ENCLOSURE WITH LOCKABLE DOOR AND SIDE LOUVERS. SEE DETAIL ON PLAN P 502 FOR MORE INFORMATION.

AIR COMPRESSOR SCHEDULE

EQUIPMENT NO.	LOCATION	MANUFACTURER	MODEL	TYPE	SERVICE	TANK SIZE (GAL)	OUTPUT (CFM)	HP (EA)	PHASE	CYCLE	VOLTAGE	DIMENSIONS L x W x H (IN.)	WEIGHT (LBS)	SPECIFICATION	REMARKS
AC-1	UTILITY	QUINCY	QT-5	PISTON	COMPRESSED AIR	80	17	HP	3	60 HZ	200 V	35.0 x 28.0 x 77.0	680	RECIPROCATING PISTON AIR COMPRESSOR WITH SLOW SPEED OPEN DRIP PROOF MOTOR, 200 PSIG-RATED ASME/CRN RATED RECEIVER, ASME RATED RELIEF VALVES, TANK PRESSURE GAUGE, SERVICE VALVE, PRESSURE SWITCH, LOADLESS AUTO-STOP/START CONTROLS, AND UL LISTED AND CSA CERTIFIED ELECTRICAL COMPONENTS.	PROVIDE TSUNAMI 21999-0177 AUTOMATIC DRAIN VALVE FOR TANK DRAIN.

MIXING VALVE SCHEDULE

EQUIPMENT NO.	LOCATION	BASIS OF DESIGN INFORMATION								SPECIFICATION
		MAXIMUM PRESSURE RANGE	MINIMUM FLOW	INLET SIZE	OUTLET SIZE	TEMPERATURE SETPOINT	MANUFACTURER	MODEL	NOMINAL DIMENSIONS (W X H)	
MV-1	UTILITY MEZZANINE	125 PSI	0.5 GPM	1-1/4"	1-1/2"	120 DEG. F.	WATTS	LFSH1434	15-1/4" X 9-1/4"	LEAD FREE BRASS MIXING VALVE. MIXING VALVE SHALL HAVE AN APPROACH TEMPERATURE OF 5 DEG. F., AN OUTLET TEMPERATURE RANGE FROM 90 DEG. F TO 160 DEG. F, A LOCKABLE TEMPERATURE SETTING FEATURE, AND SHALL COME STANDARD WITH UNION CHECK STOPS. VALVE SHALL HAVE MINIMUM FLOW OF 0.5 GPM AND SHALL BE LISTED TO ASSE 1017 AND CSA B125.
MV-2	BELOW SINKS	125 PSI	0.5 GPM	1/2"	1/2"	105 DEG. F.	WATTS	LFMMV	4-7/8" X 5-7/16"	LEAD FREE BRASS MIXING VALVE. MIXING VALVE SHALL HAVE AN APPROACH TEMPERATURE OF 5 DEG. F., AN OUTLET TEMPERATURE RANGE FROM 80 DEG. F TO 120 DEG. F, A LOCKABLE TEMPERATURE SETTING FEATURE, AND SHALL COME STANDARD WITH UNION CHECK STOPS. VALVE SHALL HAVE MINIMUM FLOW OF 0.5 GPM AND SHALL BE LISTED TO ASSE 1017 AND CSA B125.70.

NOTE: ALL MIXING VALVES SHALL BE ASSE AND NSF COMPLIANT.

C:\Users\mfeilman\Documents_Revit Backup\TRFD2302_Central23-M_mfeilman2422k2.rvt

2/25/2025 4:11:29 PM

H2M architects + engineers

538 Broad Hollow Road, 4th Floor East
Melville, NY 11747
631.756.8000 • www.h2m.com
NY Architecture & Landscape Architecture: No Certificate Required
NY Engineering Certificate of Authorization No.: 0018178

CONSULTANTS:

MARK	DATE	DESCRIPTION

STATE OF NEW YORK · JONATHAN RICHARD MURATORE · 096440-1 · LICENSED PROFESSIONAL ENGINEER

10/31/2027
Exp. Date

JONATHAN R. MURATORE, P.E.
NY PROFESSIONAL ENGINEER Lic. No. 096440

"IN ACCORDANCE WITH ARTICLE 145, SECTION 7209 OF THE NYS EDUCATION LAW, ALTERATION OF THIS DOCUMENT EXCEPT BY A LICENSED PROFESSIONAL IS ILLEGAL"

DESIGNED BY:	DRAWN BY:	CHECKED BY:	REVIEWED BY:
CRG	JWC	JRM	JRM

PROJECT No:	DATE:	SCALE:
TRFD 2302	FEBRUARY 2025	AS SHOWN

CLIENT

THIELLS ROSEVILLE FIRE DISTRICT

NEW 26-100 FIRE HEADQUARTERS

THIELLS 26 FD

65 W RAMAPO ROAD
GARNERVILLE, NY 10923

CONTRACT

CONTRACT P
PLUMBING CONSTRUCTION

STATUS

FINAL BID DOCUMENT

SHEET TITLE

PLUMBING SCHEDULES (2 OF 2)

DRAWING No.

P 601.00

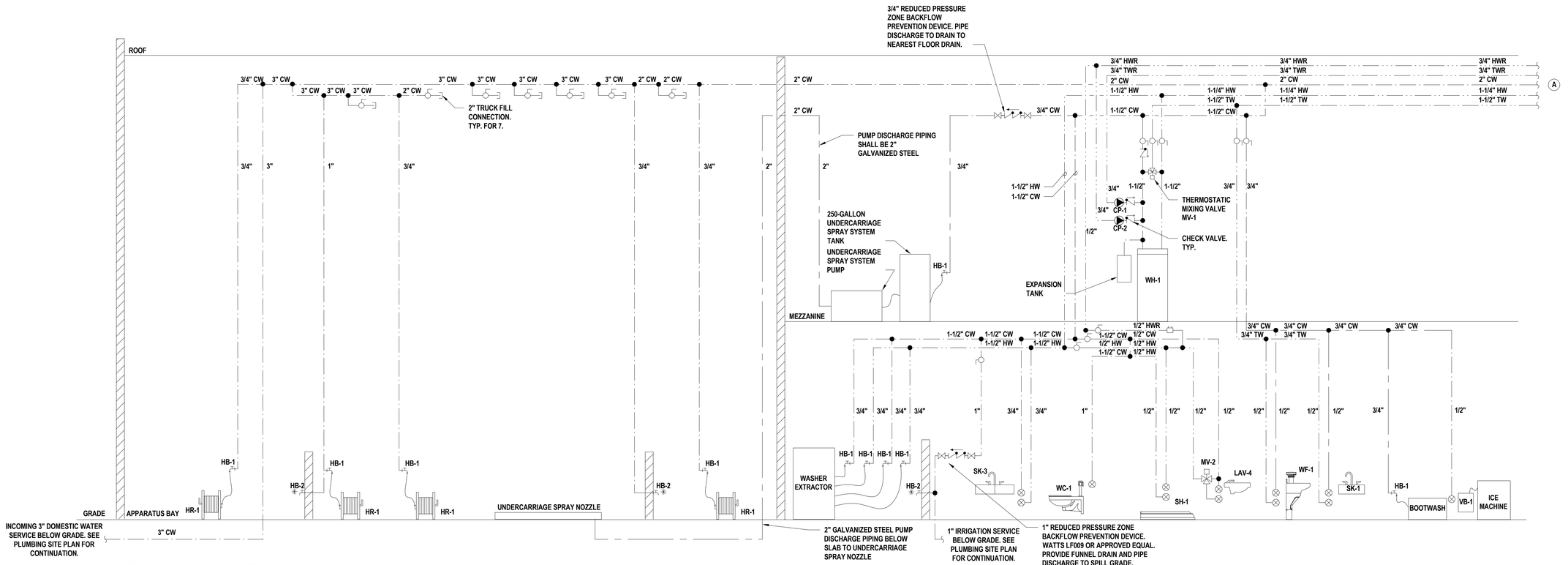

1 Domestic Water Riser Diagram (1 of 2)

SCALE N.T.S.

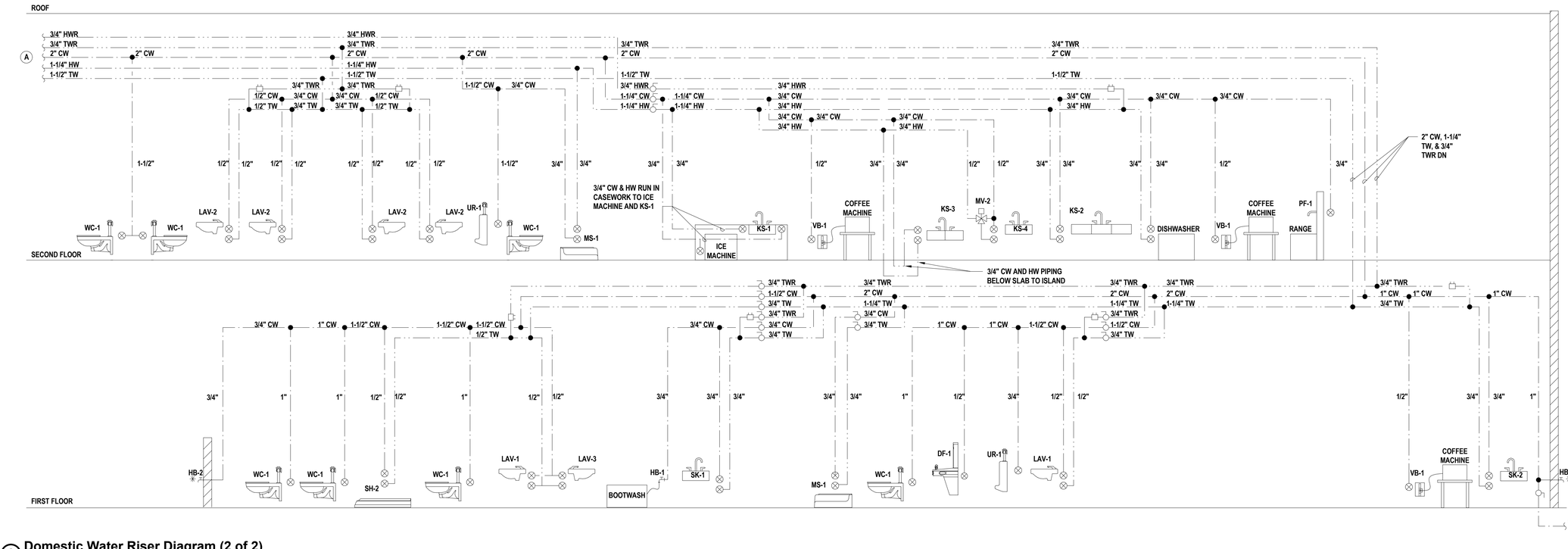

2 Domestic Water Riser Diagram (2 of 2)

SCALE N.T.S.

H2M architects + engineers

538 Broad Hollow Road, 4th Floor East
Melville, NY 11747
631.756.8000 • www.h2m.com
NY Architecture & Landscape Architecture: No Certificate Required
NY Engineering Certificate of Authorization No.: 0018178

CONSULTANTS:

MARK	DATE	DESCRIPTION

STATE OF NEW YORK · JONATHAN RICHARD MURATORE · 096440-1 · LICENSED PROFESSIONAL ENGINEER

10/31/2027
Exp. Date

JONATHAN R. MURATORE, P.E.
NY PROFESSIONAL ENGINEER Lic. No. 096440

"IN ACCORDANCE WITH ARTICLE 145, SECTION 7209 OF THE NYS EDUCATION LAW, ALTERATION OF THIS DOCUMENT EXCEPT BY A LICENSED PROFESSIONAL IS ILLEGAL"

DESIGNED BY:	DRAWN BY:	CHECKED BY:	REVIEWED BY:
CRG	MPF/CRG	JRM	JRM

PROJECT No:	DATE:	SCALE:
TRFD 2302	FEBRUARY 2025	AS SHOWN

CLIENT

THIELLS ROSEVILLE FIRE DISTRICT

NEW 26-100 FIRE HEADQUARTERS

THIELLS 26 FD

65 W RAMAPO ROAD GARNERVILLE, NY 10923

CONTRACT

CONTRACT P PLUMBING CONSTRUCTION

STATUS

FINAL BID DOCUMENT

SHEET TITLE

DOMESTIC RISER DIAGRAM

DRAWING No.

P 610.00

C:\Users\mfeltman\Documents_Revit Backup\TRFD2302_Central23-M_mfeltmanZ4Q2K2.rvt

2/25/2025 4:11:30 PM

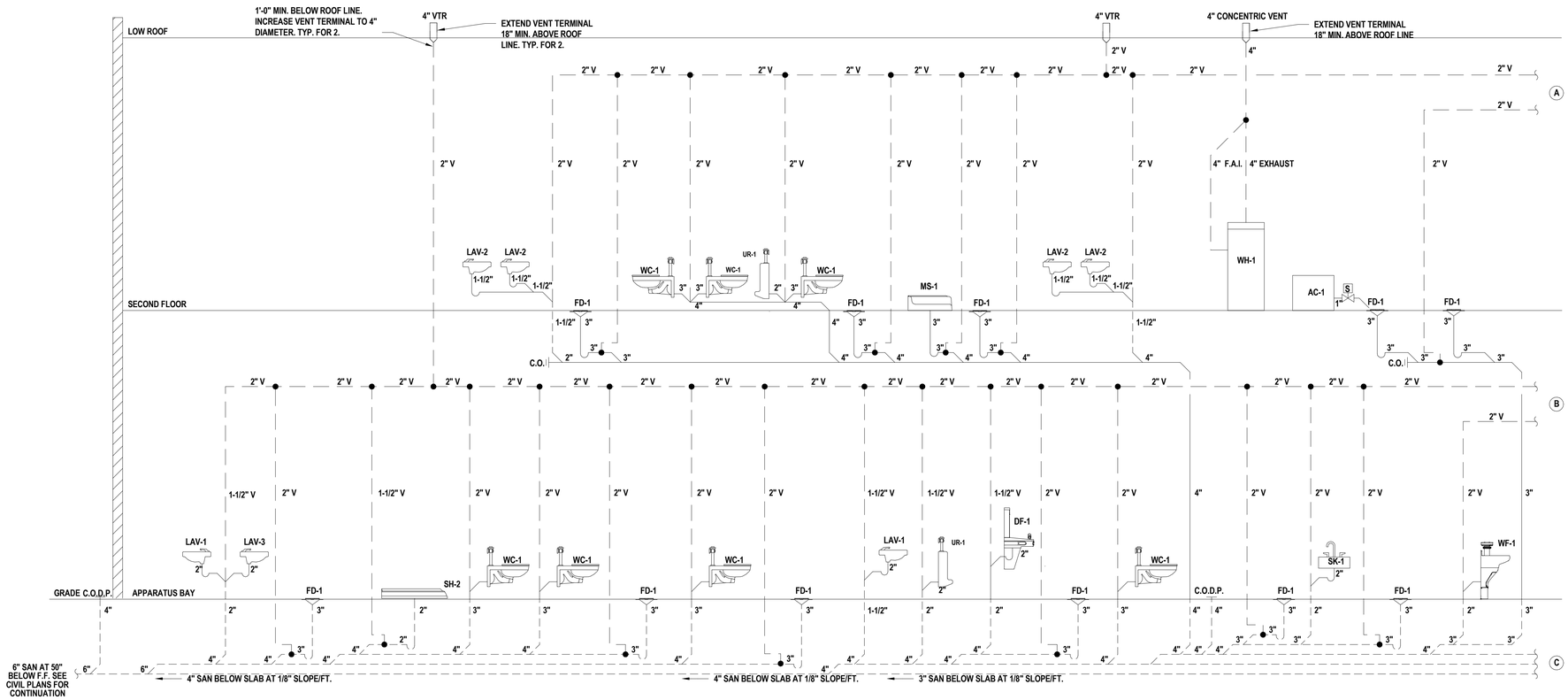

1 Sanitary and Vent Riser Diagram - Admin Space (1 of 2)

SCALE:N.T.S.

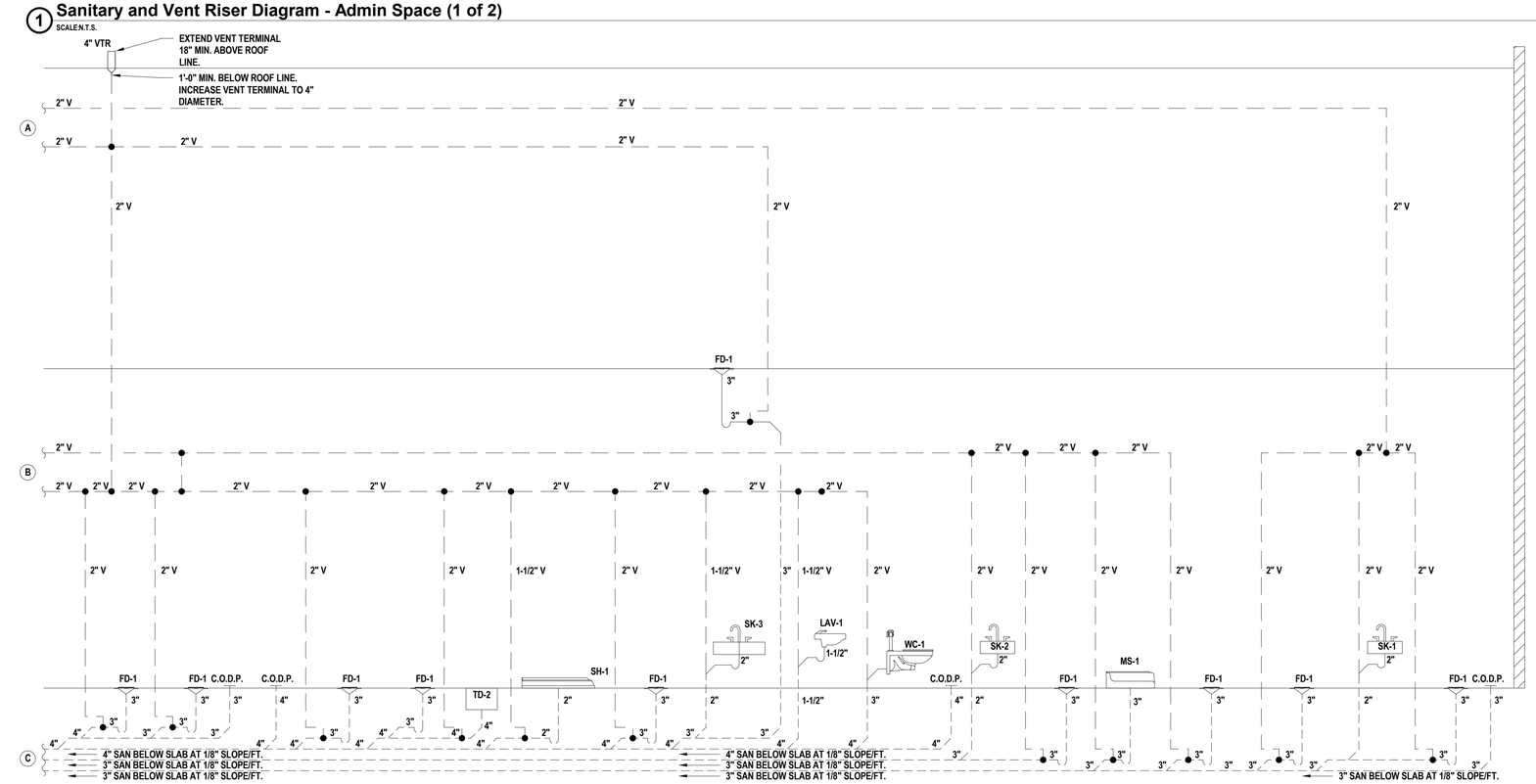

2 Sanitary and Vent Riser Diagram - Admin Space (2 of 2)

SCALE:N.T.S.

C:\Users\mfeilman\Documents_Revit Backup\TRFD2302_Central23-M_mfeilman24X2.rvt

2/25/2025 4:11:30 PM

H 2 M architects + engineers

538 Broad Hollow Road, 4th Floor East
Melville, NY 11747
631.756.8000 • www.h2m.com
NY Architecture & Landscape Architecture: No Certificate Required
NY Engineering Certificate of Authorization No.: 0018178

CONSULTANTS:

MARK	DATE	DESCRIPTION

STATE OF NEW YORK · JONATHAN RICHARD MURATORE · 096440-1 · LICENSED PROFESSIONAL ENGINEER

10/31/2027
Exp. Date

JONATHAN R. MURATORE, P.E.
NY PROFESSIONAL ENGINEER Lic. No. 096440

"IN ACCORDANCE WITH ARTICLE 145, SECTION 7209 OF THE NYS EDUCATION LAW, ALTERATION OF THIS DOCUMENT EXCEPT BY A LICENSED PROFESSIONAL IS ILLEGAL"

DESIGNED BY:	DRAWN BY:	CHECKED BY:	REVIEWED BY:
CRG	MPF/CRG	JRM	JRM
PROJECT No: TRFD 2302	DATE: FEBRUARY 2025	SCALE: AS SHOWN	

CLIENT

THIELLS ROSEVILLE FIRE DISTRICT

NEW 26-100 FIRE HEADQUARTERS

THIELLS 26 FD

65 W RAMAPO ROAD
GARNERVILLE, NY 10923

CONTRACT

CONTRACT P
PLUMBING CONSTRUCTION

STATUS

FINAL BID DOCUMENT

SHEET TITLE

SANITARY, VENT, AND STORM RISER DIAGRAMS (1 OF 2)

DRAWING No.

P 611.00

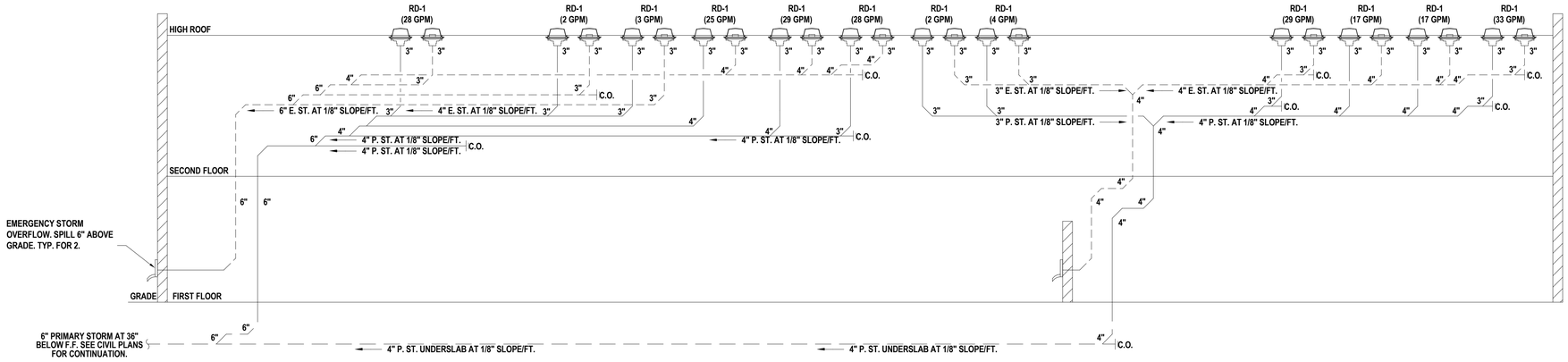

1 Storm Riser Diagram - Admin Space (1 of 2)

SCALE:N.T.S.

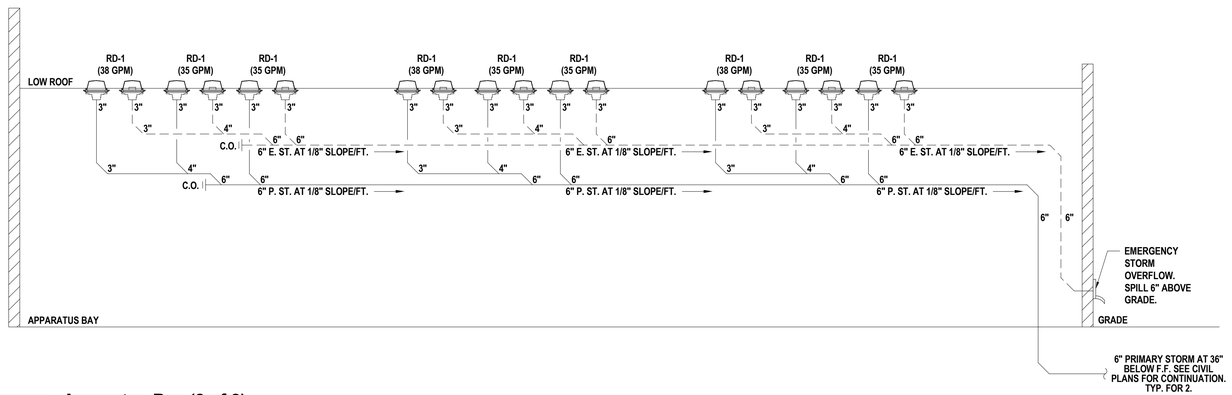

2 Storm Riser Diagram - Apparatus Bay (2 of 2)

SCALE:N.T.S.

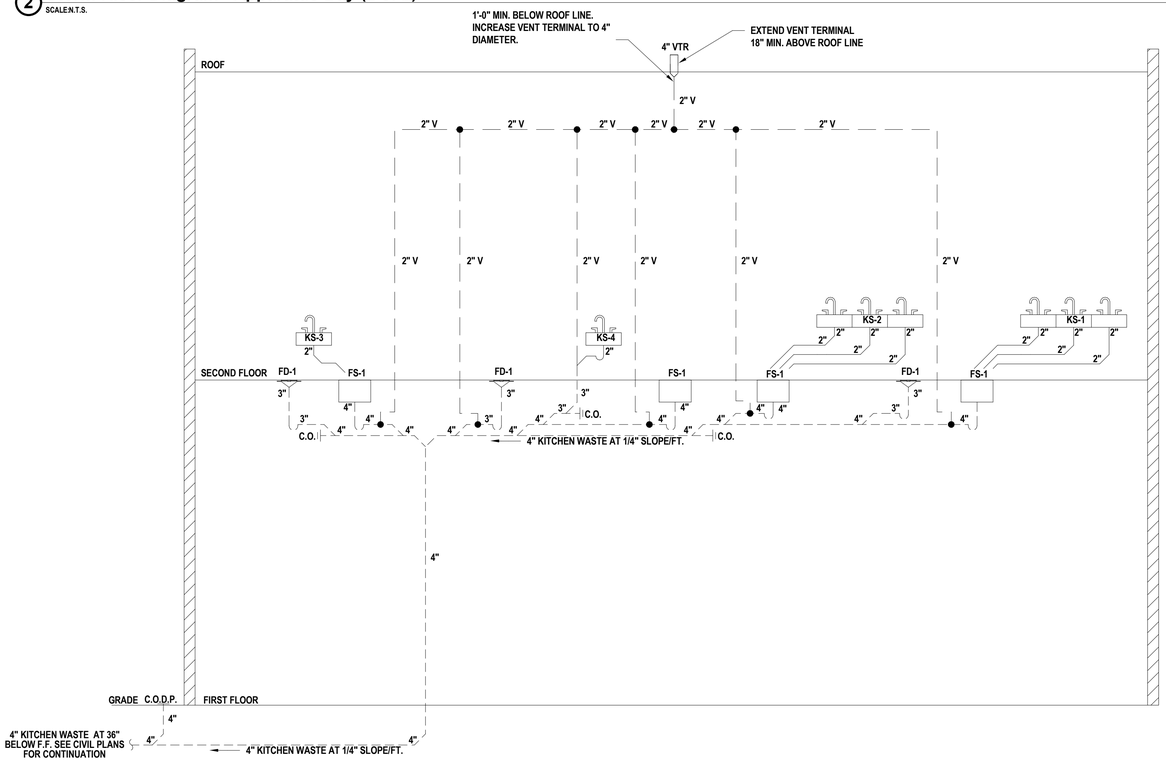

3 Kitchen Waste Riser Diagram

SCALE:N.T.S.

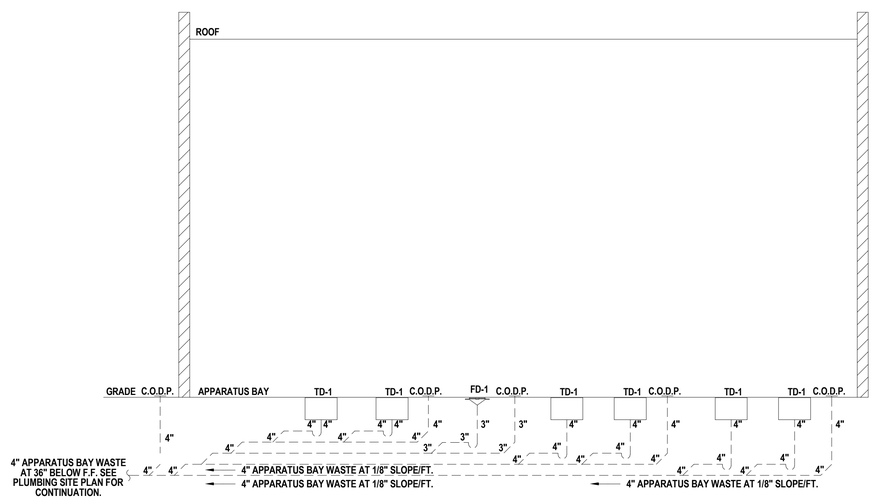

4 Apparatus Bay Waste Riser Diagram

SCALE:N.T.S.

C:\Users\mfelsman\Documents_Revit Backup\TRFD2302_Central23-M_mfelsmanZ4ZKZ.rvt

2/25/2025 4:11:31 PM

H 2 M architects + engineers

538 Broad Hollow Road, 4th Floor East
Melville, NY 11747
631.756.8000 • www.h2m.com
NY Architecture & Landscape Architecture: No Certificate Required
NY Engineering Certificate of Authorization No.: 0018178

CONSULTANTS:

MARK	DATE	DESCRIPTION

STATE OF NEW YORK · JONATHAN RICHARD MURATORE · 096440-1 · LICENSED PROFESSIONAL ENGINEER

10/31/2027
Exp. Date

JONATHAN R. MURATORE, P.E.
NY PROFESSIONAL ENGINEER Lic. No. 096440

"IN ACCORDANCE WITH ARTICLE 145, SECTION 7209 OF THE NYS EDUCATION LAW, ALTERATION OF THIS DOCUMENT EXCEPT BY A LICENSED PROFESSIONAL IS ILLEGAL"

DESIGNED BY:	DRAWN BY:	CHECKED BY:	REVIEWED BY:
CRG	MPF/CRG	JRM	JRM
PROJECT No: TRFD 2302	DATE: FEBRUARY 2025	SCALE: AS SHOWN	

CLIENT

THIELLS ROSEVILLE FIRE DISTRICT

NEW 26-100 FIRE HEADQUARTERS

THIELLS 26 FD

65 W RAMAPO ROAD
GARNERVILLE, NY 10923

CONTRACT

CONTRACT P
PLUMBING CONSTRUCTION

STATUS

FINAL BID DOCUMENT

SHEET TITLE

SANITARY, VENT, AND STORM RISER DIAGRAMS (2 OF 2)

DRAWING No.

P 612.00

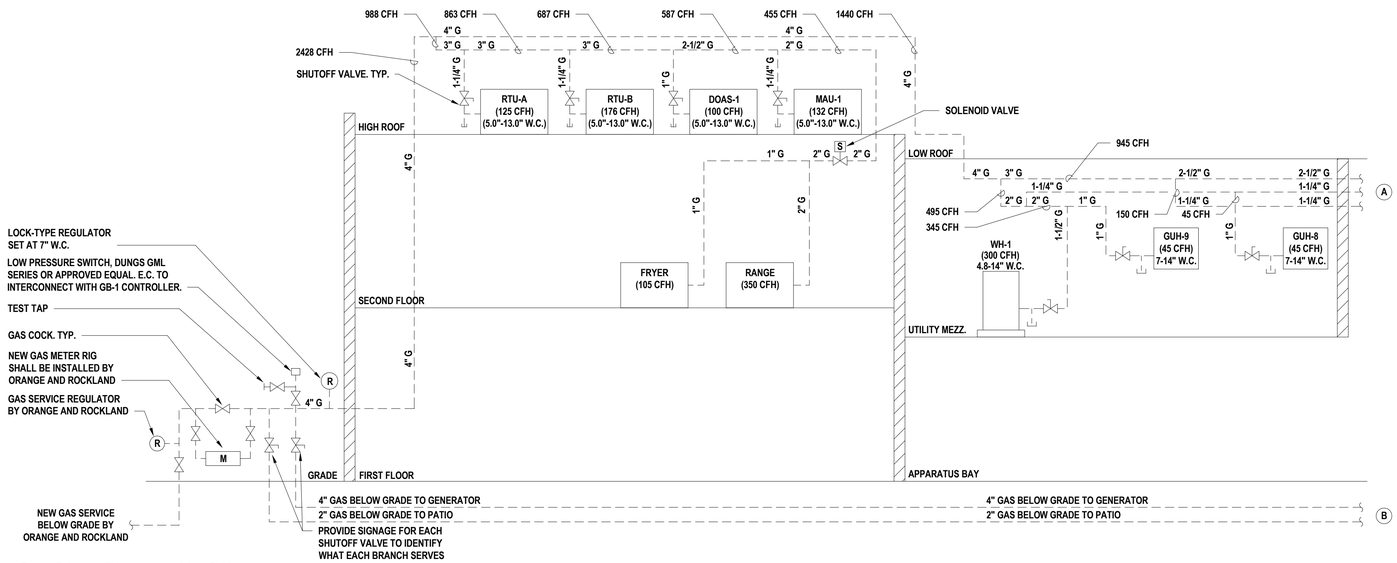

1 Gas Riser Diagram (1 of 2)

SCALE N.T.S.

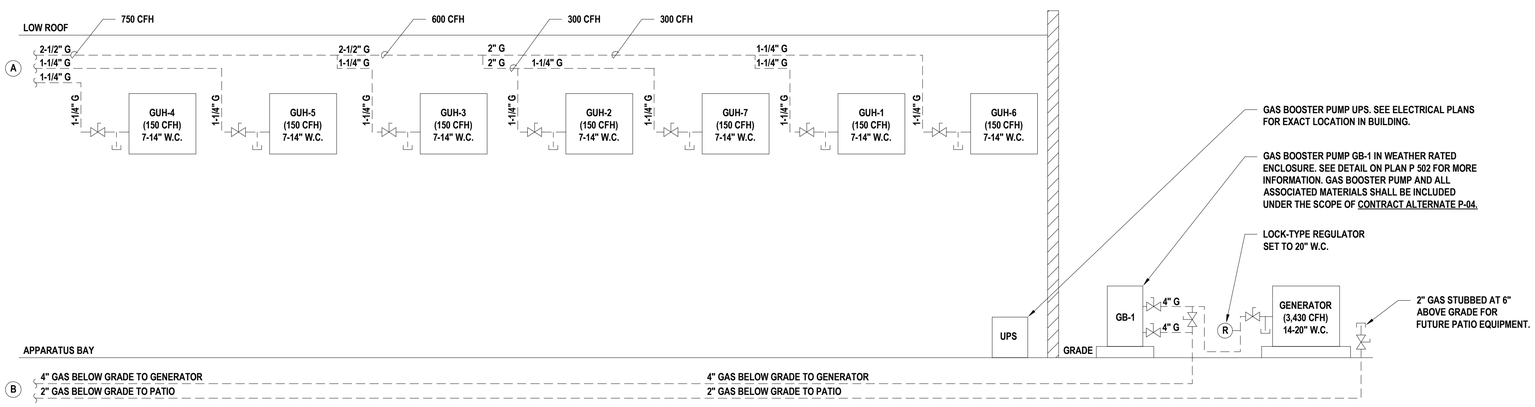

2 Gas Riser Diagram (2 of 2)

SCALE N.T.S.

H2M architects + engineers

538 Broad Hollow Road, 4th Floor East
Melville, NY 11747
631.756.8000 • www.h2m.com
NY Architecture & Landscape Architecture: No Certificate Required
NY Engineering Certificate of Authorization No.: 0018178

CONSULTANTS:

MARK	DATE	DESCRIPTION

STATE OF NEW YORK · JONATHAN RICHARD MURATORE · 096440-1 · LICENSED PROFESSIONAL ENGINEER

10/31/2027 Exp. Date

JONATHAN R. MURATORE, P.E.
NY PROFESSIONAL ENGINEER Lic. No. 096440

"IN ACCORDANCE WITH ARTICLE 145, SECTION 7209 OF THE NYS EDUCATION LAW, ALTERATION OF THIS DOCUMENT EXCEPT BY A LICENSED PROFESSIONAL IS ILLEGAL"

DESIGNED BY:	DRAWN BY:	CHECKED BY:	REVIEWED BY:
CRG	MPF/CRG	JRM	JRM

PROJECT No:	DATE:	SCALE:
TRFD 2302	FEBRUARY 2025	AS SHOWN

CLIENT

THIELLS ROSEVILLE FIRE DISTRICT

NEW 26-100 FIRE HEADQUARTERS

THIELLS 26 FD

65 W RAMAPO ROAD
GARNERVILLE, NY 10923

CONTRACT

CONTRACT P
PLUMBING CONSTRUCTION

STATUS

FINAL BID DOCUMENT

SHEET TITLE

PLUMBING
GAS RISER DIAGRAM

DRAWING No.

P 613.00

C:\Users\mfeilman\Documents_Revit Backup\TRFD2302_Central23-M_mfeilmanZ42X2.rvt

2/25/2025 4:11:31 PM

PROJECT INFORMATION

CONSTRUCTION TYPE	IIIB
OCCUPANCY	A-3, S-2, B
SPRINKLER SYSTEM TYPE	13

ABBREVIATIONS

AFF	ABOVE FINISHED FLOOR
CLG	CEILING
(D)	DEMOLISH
DCV	DOUBLE CHECK VALVE DEVICE
DIA	DIAMETER
DN	DOWN
(E)	EXISTING
EA	EACH
FD	FLOOR DRAIN
FP	FIRE PUMP
FPC	FIRE PROTECTION CONTRACTOR
FT.	FEET
'GC'	GENERAL CONTRACTOR
GPM	GALLONS PER MINUTE
'H'	HVAC CONTRACTOR
HP	HORSEPOWER
HZ	HERTZ
JP	JOCKEY PUMP
IN.	INCHES
KW	KILOWATTS
LBS	POUNDS
M	METER
MAX	MAXIMUM
MIN	MINIMUM
NFPA	NATIONAL FIRE PROTECTION ASSOCIATION
NTS	NOT TO SCALE
OD	OUTER DIAMETER
(P)	PROPOSED
'P'	PLUMBING CONTRACTOR
RPM	REVOLUTIONS PER MINUTE
RPZ	REDUCED PRESSURE ZONE DEVICE
TYP	TYPICAL

SYMBOLS LIST

	GENERAL VALVE
	GATE VALVE (NON-RISING STEM)
	OS & Y GATE VALVE
	CHECK VALVE
	BUTTERFLY VALVE
	DRAIN VALVE
	BACKFLOW PREVENTER - DOUBLE CHECK VALVE
	REDUCER
	PRESSURE GAUGE
M	METER
	PUMP
	SPRINKLER PIPING AND BRANCH LINE - WET SYSTEM
	CAP END
	FLOW IN DIRECTION OF ARROW
	PIPE UP
	PIPE DOWN
	RISER
FDC	SIAMESE FIRE DEPARTMENT CONNECTION
FDC	FREE STANDING SIAMESE FIRE DEPARTMENT CONNECTION
WF	FLOW DETECTOR / SWITCH
PS	PRESSURE DETECTOR / SWITCH
TS VS	TAMPER SWITCH / VALVE SUPERVISORY SWITCH
	THRUST BLOCK
	POINT OF CONNECTION
	POINT OF DISCONNECTION
#	HYDRAULIC NODE

GENERAL SPRINKLER NOTES

1. ALL EQUIPMENT SHALL BE APPROVED AND LISTED FOR FIRE PROTECTION SERVICE.
2. PROVIDE A WATER SUPPLY LETTER WITH FLOW TEST DATA INDICATING DATE OF TEST AND DATA USED FOR HYDRAULIC CALCULATIONS.
3. THE CONTRACTOR IS RESPONSIBLE TO PREPARE APPLICATIONS, PAY FEES, AND OBTAIN ALL PERMITS AND APPROVALS AS REQUIRED. DESIGN AND INSTALL SYSTEMS COMPLETE AND IN WORKING ORDER, AND IN COMPLIANCE WITH THE REQUIREMENTS OF THE UNIFORM CODE, NFPA, LOCAL FIRE DEPARTMENT, AND AUTHORITY HAVING JURISDICTION.
4. FLOOR PLANS ARE PROVIDED FOR CONTRACTOR'S USE AS BACKGROUND DRAWINGS. CONTRACTOR SHALL REVIEW AND COORDINATE WORK WITH ALL OTHER BUILDING DRAWINGS AS REQUIRED TO PROVIDE A COMPLETE AUTOMATIC SPRINKLER PROTECTION IN THE AREAS OF WORK AS DESCRIBED IN SCOPE OF WORK AND IN THE PROJECT SPECIFICATIONS.
5. THE CONTRACTOR'S MATERIAL AND TEST CERTIFICATES REQUIRED BY THE UNIFORM CODE AND NFPA FOR ABOVE GROUND AND UNDERGROUND PIPE SHALL BE SUBMITTED TO THE AUTHORITY HAVING JURISDICTION PRIOR TO APPROVAL OF THE INSTALLATION.
6. INSPECTION AND TESTS OF FIRE SUPPRESSION SYSTEM SHALL BE CONDUCTED AS SPECIFIED IN THE UNIFORM CODE AND NFPA. DOCUMENTATION OF ALL REQUIRED SYSTEMS INSPECTION AND TEST CERTIFICATES SHALL BE PROVIDED IN WRITING TO THE OWNER, ENGINEER AND AUTHORITY HAVING JURISDICTION.
7. PIPING SPECIFICATIONS, PIPE SCHEDULES, SYSTEM TEST PIPES, PROTECTION AGAINST CORROSION, DAMAGE FITTINGS, VALVES, HANGERS, SPRINKLERS, GUARDS AND SHIELDS SHALL BE IN ACCORDANCE NFPA 13, 2016 EDITION.
8. WET-PIPE FIRE SUPPRESSION SYSTEMS SHALL BE PROTECTED AGAINST FREEZING AT ALL TIMES. THE OWNER SHALL PROVIDE HEAT THROUGHOUT THE ENTIRE AREA WHERE WET-PIPE FIRE SUPPRESSION SYSTEMS ARE INSTALLED.
9. FIRE SUPPRESSION SYSTEMS, EQUIPMENT, AND APPURTENANCES SHALL BE PROTECTED AGAINST MECHANICAL DAMAGE.
10. THE CONTRACTOR IS RESPONSIBLE FOR PROVIDING AND INSTALLING ALL REQUIRED SIGNAGE AND HYDRAULIC NAMEPLATES. ALL VALVES SHALL BE IDENTIFIED AS REQUIRED BY THE UNIFORM CODE AND NFPA.
11. THE CONTRACTOR SHALL PROVIDE PERMANENT PROVISIONS TO FACILITATE FLUSHING SYSTEM PIPING BY PROVIDING FLUSHING CONNECTIONS.
12. ALL VALVES ON CONNECTIONS TO WATER SUPPLIES AND IN SUPPLY TO FIRE SUPPRESSION SYSTEMS SHALL BE APPROVED OS&Y OR APPROVED INDICATOR TYPE WITH FIRE ALARM SYSTEM SUPERVISORY SWITCHES. CONTRACTOR SHALL FURNISH AND INSTALL SUPERVISORY SWITCHES FOR ALL FIRE SUPPRESSION VALVES ON THE PROJECT.
13. WATER SUPPLY TEST PIPES AND GAUGES SHALL BE PROVIDED AS SPECIFIED IN NFPA 13.
14. ALL PIPES PASSING THROUGH FOUNDATION WALLS SHALL BE PROTECTED. UNDERGROUND PIPING, INCLUDING WHERE IT ENTERS THE BUILDING, SHALL BE SUPPORTED AS SPECIFIED NY NFPA 24 PERTAINING TO RODDING, CLAMPING AND THRUST BLOCKING OF THE PIPE.
15. HANGING AND BRACING SPRINKLER SYSTEM SHALL BE IN ACCORDANCE WITH CHAPTER 9 OF NFPA 13. SPRINKLER PIPING SHALL BE SUPPORTED BY ADJUSTABLE HANGERS AND SEISMIC BRACING PER THE UNIFORM CODE AND NFPA. LISTED FLEXIBLE COUPLINGS SHALL BE INSTALLED AT THE TOP AND BOTTOM OF ALL RISERS.
16. HANGERS SHALL BE OF A TYPE APPROVED FOR USE WITH THE PIPE OR TUBE INVOLVED AND APPROPRIATE FOR THE TYPE OF BUILDING CONSTRUCTION. SPRINKLER PIPING SHALL BE SUPPORTED BY ADJUSTABLE HANGERS PER NFPA.
17. CLEARANCES FOR WALL PENETRATIONS SHALL BE IN ACCORDANCE WITH NFPA 13.
18. ALL PIPING PASSING THROUGH FIRE-RESISTANCE RATED CONSTRUCTION SHALL BE INSTALLED WITH UL LISTED MATERIALS AND ASSEMBLIES TO MAINTAIN THE REQUIRED RATING. MATERIALS AND INSTALLATION SHALL COMPLY WITH THE UNIFORM AND CONTRACT SPECIFICATIONS.
19. THE CONTRACTOR IS RESPONSIBLE FOR PAINTING FIRE PROTECTION PIPING IN ACCORDANCE WITH THE CONTRACT SPECIFICATIONS. ALL EXPOSED SPRINKLER PIPING SHALL BE PAINTED RED IN BACK-OF-HOUSE AREAS AND PAINTED TO MATCH ARCHITECTURAL FINISHES IN FINISHED AREAS. WHERE REQUIRED BY THE AUTHORITY HAVING JURISDICTION THE CONTRACTOR SHALL PAINT ALL PIPING RED, INCLUDING FIRE PROTECTION PIPING IN CHASES AND ALL OTHER ENCLOSED PIPING.
20. A ONE PIECE REDUCING FITTING OF GOOD DESIGN SHOULD BE USED WHEREVER A CHANGE IS MADE IN THE SIZE OF PIPE IN ACCORDANCE WITH NFPA.

CONTRACT 'FP' NOTES

1. FURNISH ALL SLEEVES FOR PIPE AND CONDUIT FLOOR, WALL, PARTITION, AND ROOF PENETRATIONS FOR INSTALLATION BY CONTRACT 'G'.
2. PERFORM ALL CUTTING AND ROUGH PATCHING AS REQUIRED IN THE EXECUTION OF THE WORK. FINISH PATCHING AND FLASHING IS PART OF CONTRACT 'G'.
3. THIS CONTRACTOR SHALL BE RESPONSIBLE FOR MOTOR STARTERS FOR ALL MOTORS INCLUDED IN THIS CONTRACT UNLESS NOTED OTHERWISE. ALL STARTERS SHALL BE SIZED TO MATCH MOTOR HORSE POWER

SPRINKLER SCHEDULE

SYMBOL	MANUFACTURER	MODEL	TYPE	SIN	K-FACTOR	SIZE	TEMPERATURE	COVERAGE	REQUIRED FLOW (GPM)	REQUIRED PRESSURE	FINISH
○	VIKING	MICROFAST QUICK RESPONSE	UPRIGHT	VK300	5.6	1/2"	155 DEG. F	REFER TO LISTING	REFER TO LISTING	7 PSI	BRASS
●	VIKING	MIRAGE QUICK RESPONSE	CONCEALED PENDENT	VK462	5.6	1/2"	155 DEG. F	REFER TO LISTING	REFER TO LISTING	7 PSI	WHITE COVERPLATE
◁	VIKING	MICROFAST QUICK RESPONSE	SIDEWALL	VK305	5.6	1/2"	155 DEG. F	REFER TO LISTING	REFER TO LISTING	7 PSI	BRASS

SPRINKLER SYSTEM NOTES

1. THE CONTRACTOR IS RESPONSIBLE TO SUPPLY AND INSTALL A COMPLETE AUTOMATIC SPRINKLER PROTECTION THROUGHOUT THE BUILDING THAT IS CODE COMPLIANT. IN THE EVENT THAT UNFORESEEABLE FIELD CONDITIONS CREATE SPRINKLER OBSTRUCTIONS OR A NON COMPLIANT INSTALLATION, IT IS THE CONTRACTOR'S RESPONSIBILITY TO NOTIFY THE ARCHITECT AND ENGINEER IN WRITING PRIOR TO THE INSTALLATION. IF NON COMPLIANT INSTALLATION COMMENCES WITHOUT NOTIFYING THE ARCHITECT OR ENGINEER, IT IS THE CONTRACTOR'S RESPONSIBILITY AT CONTRACTOR'S EXPENSE TO RECTIFY THE SPRINKLER SYSTEM TO BE CODE COMPLIANT.
2. ALL WORK SHALL BE PERFORMED AND INSTALLED IN ACCORDANCE WITH THE 2020 NEW YORK STATE FIRE PREVENTION AND BUILDING CODE AND ITS REFERENCED STANDARDS, INCLUDING BUT NOT LIMITED TO, NFPA 13 (2016 EDITION) AND THE REQUIREMENTS OF THE AUTHORITY HAVING JURISDICTION. SYSTEMS SHALL BE DESIGNED AS OUTLINED IN THE CONTRACT DRAWINGS AND SPECIFICATIONS.
3. SPRINKLER PLANS AS SHOWN ARE FOR BIDDING PURPOSES ONLY, AND IS ONLY TO DEMONSTRATE DESIGN INTENT. SPRINKLER CONTRACTOR IS TO SUBMIT SHOP DRAWINGS INCLUDING HYDRAULIC CALCULATIONS FOR SYSTEM PIPE SIZING AND SHALL BE SIGNED AND SEALED BY A LICENSED PROFESSIONAL ENGINEER TO BE REVIEWED BY H2M. SPRINKLER CONTRACTOR SHALL DESIGN SPRINKLER PIPING TO INCLUDE A 10 PERCENT MARGIN OF SAFETY FOR BOTH AVAILABLE WATER FLOW AND PRESSURE.
4. INSTALLER'S QUALIFICATIONS: A QUALIFIED FIRM THAT IS EXPERIENCED OF AT LEAST A MINIMUM OF 5 PREVIOUS PROJECTS SIMILAR IN SIZE AND SCOPE TO THE PROJECT, FAMILIAR WITH PRECAUTIONS REQUIRED, AND IN COMPLIANCE WITH THE REQUIREMENTS OF THE AUTHORITY HAVING JURISDICTION. FIRE PROTECTION CONTRACTOR SHALL SUBMIT APPROPRIATE CERTIFICATION INCLUDING CERTIFICATION NUMBER UPON SHOP DRAWING SUBMISSION.
5. SPRINKLER CONTRACTOR SHALL MAKE AN ALLOWANCE TO INSTALL A MINIMUM OF 10% ADDITIONAL SPRINKLER HEADS TO BE INSTALLED AS TO PROVIDE ADEQUATE COVERAGE DUE TO ANY MECHANICAL AND/OR ARCHITECTURAL OBSTRUCTIONS, DUCT WORK, PIPING, ETC. INSTALLED DURING CONSTRUCTION WHICH MAY ALTER THE ORIGINAL DESIGN.
6. PROVISIONS SHOULD BE MADE TO FACILITATE FLUSHING SYSTEM PIPING BY PROVIDING FLUSHING CONNECTIONS CONSISTING OF A CAPPED NIPPLE 4" LONG ON THE END OF THE CROSS MAIN. ALSO INCLUDES DRAINING OF TRAPPED WATER USING AUXILLARY DRAINS FOR WET SYSTEMS AND DRUM DRIPS FOR DRY SYSTEMS. ALL DRAINS TO BE ACCESSIBLE AND LABELED IN ACCORDANCE WITH NFPA 13.
7. ALL PIPING SHALL BE A MINIMUM OF 1-INCH.
8. A MINIMUM OF 18 INCHES MUST BE KEPT CLEAR BELOW SPRINKLERS TO TOP OF STORAGE.
9. SPACING, LOCATION AND POSITION OF SPRINKLERS SHALL BE IN ACCORDANCE WITH ALL REQUIRED OBSTRUCTION CRITERIA OF THE UNIFORM CODE AND NFPA.
10. CENTER SPRINKLER HEADS ON CEILING TILES.
11. SUSPENDED CEILING TILE SYSTEMS AND GYPSUM BOARD CEILINGS ARE SHOWN. ALL OTHER CEILINGS ARE OPEN TO THE STRUCTURE. REFER TO 'A' AND 'S' DRAWINGS FOR SECTIONS CLEARANCES, AND FINAL REFLECTED CEILING PLANS.
12. DISTANCE OF SPRINKLERS FROM HEAT SOURCES SHALL BE IN ACCORDANCE WITH NFPA.
13. SPRINKLER TEMPERATURE RATINGS SHALL BE ORDINARY UNLESS SPRINKLERS ARE EXPOSED TO HIGH TEMPERATURE EQUIPMENT, UNVENTILATED ATTICS, OR SKYLIGHTS. IN SUCH CASE, SPRINKLER TEMPERATURE RATINGS SHALL BE IN ACCORDANCE WITH NFPA.
14. ALL SPRINKLERS SHALL BE QUICK RESPONSE UNLESS OTHERWISE NOTED. THE USE OF QUICK RESPONSE AND STANDARD RESPONSE SPRINKLERS IN THE SAME SPACE IS NOT PERMITTED.
15. CONTRACTOR SHALL PROVIDE A SPRINKLER CABINET WITH SPRINKLER WRENCHES AND A STOCK OF EXTRA SPRINKLERS AS REQUIRED BY THE NFPA. THE QUANTITY AND TYPE OF OF WRENCHES SHALL BE AS REQUIRED BY NFPA, INCLUDING FOR EACH TEMPERATURE RATING.
16. SPRINKLER ALARMS SHALL BE INSTALLED IN ACCORDANCE WITH THE UNIFORM CODE AND NFPA.
17. CONTRACTOR SHALL SPRINKLER ALL COMBUSTIBLE ABOVE-CEILING SPACES.
18. SYSTEM PIPING IS NOT PERMITTED TO BE RUN OVER ELECTRICAL PANELS OR TELECOMMUNICATIONS PANELS.
19. PIPING THAT IS WELDED IN THE FIELD OR FABRICATED SHALL BEAR THE WELDER'S IDENTIFICATION MARK OR LABEL ONTO EACH PIECE ADJACENT TO THE WELD, AND CONTRACTOR OR FABRICATOR SHALL MAINTAIN CERTIFIED RECORDS AS PER NFPA 13.
20. VIBRATION ISOLATION & SEISMIC RESTRAINTS - UNLESS OTHERWISE NOTED ON THE DRAWINGS, ALL FIRE PROTECTION EQUIPMENT SHALL BE MOUNTED ON SEISMIC RESTRAINTS AND VIBRATION ISOLATORS TO PREVENT THE TRANSMISSION OF VIBRATION AND MECHANICALLY TRANSMITTED SOUND TO THE BUILDING STRUCTURE. SEISMIC RESTRAINTS AND VIBRATION ISOLATORS SHALL BE SELECTED IN ACCORDANCE WITH THE SPECIFICATIONS AND ON ACTUAL WEIGHT DISTRIBUTION OF THE EQUIPMENT FURNISHED, SO AS TO PRODUCE REASONABLY UNIFORM DEFLECTION. DEFLECTIONS SHALL BE AS NOTED ON THE EQUIPMENT SHOP DRAWING SUBMITTALS. ALL VIBRATION ISOLATORS AND SEISMIC RESTRAINTS WILL BE IN STRICT ACCORDANCE WITH 2020 INTERNATIONAL BUILDING CODE. THE MANUFACTURER OF THE VIBRATION AND SEISMIC CONTROL EQUIPMENT WILL DESIGN AND CALCULATE THE VIBRATION ISOLATION AND SEISMIC RESTRAINT TYPES, SIZES, LOCATIONS, DEFLECTIONS, DEAD LOADS, ANCHORING METHODS, BOLT DIAMETERS, EMBEDMENT AND WELD LENGTHS BASED ON ACTUAL EQUIPMENT BEING INSTALLED. THIS MANUFACTURER WILL SUBMIT THESE CALCULATIONS STAMPED AND APPROVED BY A PROFESSIONAL ENGINEER. AS PART OF THE VIBRATION ISOLATION AND SEISMIC RESTRAINTS SHOP DRAWINGS. ALSO SUBMIT A SEISMIC DESIGN ERRORS AND OMISSIONS INSURANCE CERTIFICATE AS PART OF THIS SHOP DRAWING. THE MANUFACTURER WILL PROVIDE INSTALLATION INSTRUCTIONS, DRAWINGS, DETAILS, AND FIELD SUPERVISION.

20.1. SEISMIC REQUIREMENTS
- 20.1.1. SITE CLASSIFICATION (C):
- 20.1.2. SEISMIC USE GROUP (I):
- 20.1.3. SEISMIC DESIGN CATEGORY (B):

IN A BUILDING CLASSIFIED AS SEISMIC CATEGORY "A" OR "B", SEISMIC ISOLATION IS NOT REQUIRED. INSTALL ONLY VIBRATION ISOLATION AS SPECIFIED.

IN A BUILDING CLASSIFIED AS SEISMIC CATEGORY "C", ALL SYSTEMS WITH AN IMPORTANCE FACTOR OF 1.5 SHALL BE SEISMICALLY BRACE.

LIGHT HAZARD

APPLICABLE AREAS	OFFICE, CORRIDOR, ETC.
DESIGN DENSITY	0.1 GPM PER SQ. F.T
AREA OF APPLICATION	1,500 SQ. FT.
HOSE DEMAND	100 GPM FOR 30-60 MINUTES

ORDINARY HAZARD - GROUP 1

APPLICABLE AREAS	STORAGE, MECHANICAL ROOMS, ELECTRICAL ROOMS, ETC.
DESIGN DENSITY	0.15 GPM PER SQ. F.T
AREA OF APPLICATION	1,500 SQ. FT.
HOSE DEMAND	250 GPM FOR 60-90 MINUTES

SYSTEM HYDRAULIC DEMAND

REMOTE AREA - KITCHEN

HAZARD CLASSIFICATION	ORDINARY HAZARD I
DENSITY	0.15 GPM PER SQ. FT. FOR 1,500 SQ. FT.
TOTAL HOSE STREAMS	250 GPM
DRY CAPACITY	-
TOTAL HEADS FLOWING	15
K-FACTOR	5.6
TOTAL WATER REQUIRED	538.78 GPM
TOTAL PRESSURE REQUIRED	50.74 PSIG
SAFETY MARGIN	17.97 PSIG (26.16%)

H2M architects + engineers

538 Broad Hollow Road, 4th Floor East
Melville, NY 11747
631.756.8000 • www.h2m.com
NY Architecture & Landscape Architecture: No Certificate Required
NY Engineering Certificate of Authorization No.: 0018178

CONSULTANTS:

MARK	DATE	DESCRIPTION

STATE OF NEW YORK · JONATHAN RICHARD MURATORE · 096440-1 · LICENSED PROFESSIONAL ENGINEER

10/31/2027
Exp. Date

JONATHAN R. MURATORE, P.E.
NY PROFESSIONAL ENGINEER Lic. No. 096440

"IN ACCORDANCE WITH ARTICLE 145, SECTION 7209 OF THE NYS EDUCATION LAW, ALTERATION OF THIS DOCUMENT EXCEPT BY A LICENSED PROFESSIONAL IS ILLEGAL"

DESIGNED BY:	DRAWN BY:	CHECKED BY:	REVIEWED BY:
CRG	MPF/CRG	JRM	JRM

PROJECT No:	DATE:	SCALE:
TRFD 2302	FEBRUARY 2025	AS SHOWN

CLIENT

THIELLS ROSEVILLE FIRE DISTRICT

NEW 26-100 FIRE HEADQUARTERS

THIELLS 26 FD

65 W RAMAPO ROAD
GARNERVILLE, NY 10923

CONTRACT

CONTRACT P
PLUMBING CONSTRUCTION

STATUS

FINAL BID DOCUMENT

SHEET TITLE

FIRE PROTECTION GENERAL NOTES, ABBREVIATIONS, AND LEGENDS

DRAWING No.

FP 001.00

C:\Users\mfelsman\Documents_Revit Backup\TRFD2302_Central23-M_mfelsmanZ42X2.rvt
2/25/2025 4:10:46 PM

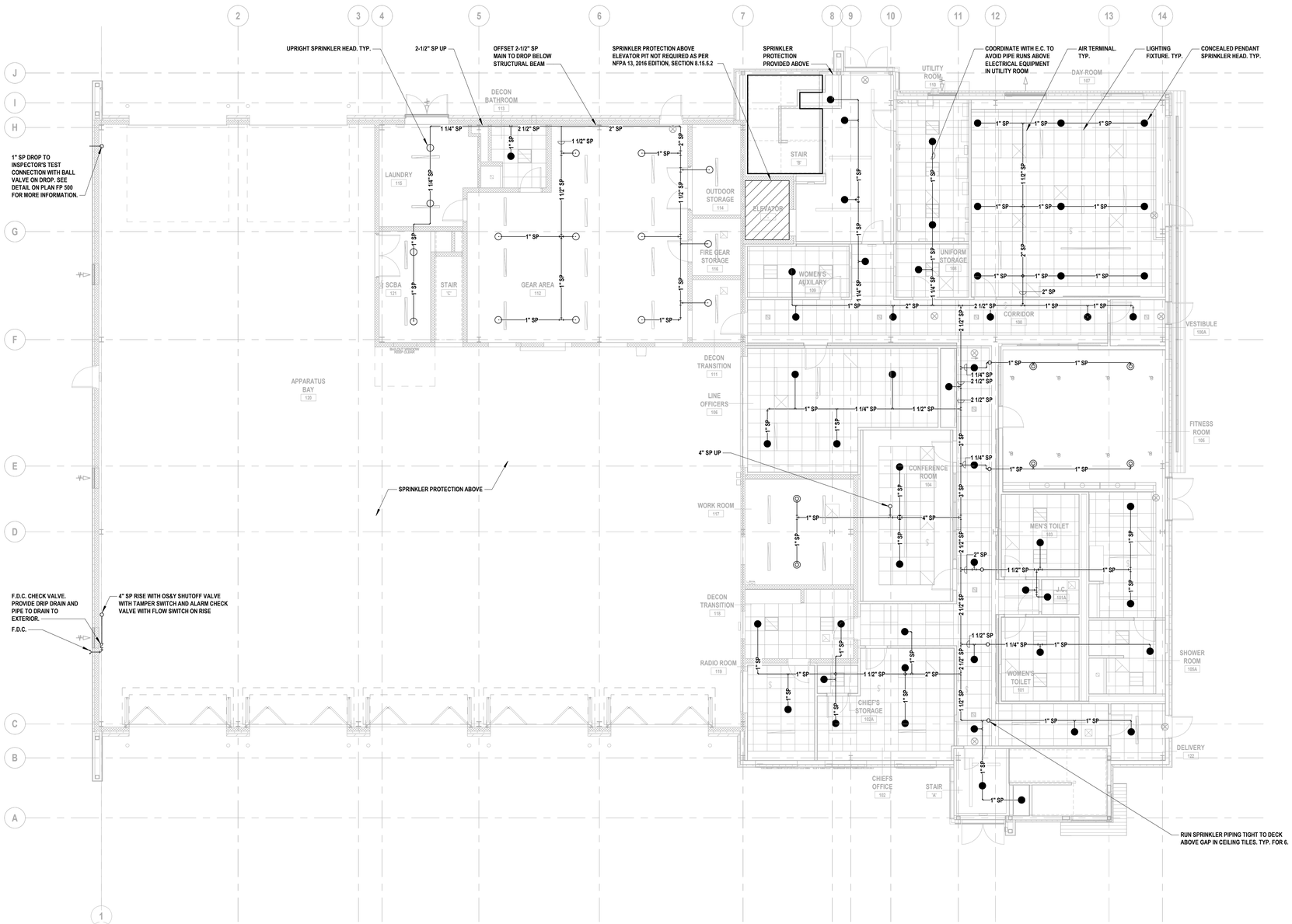

1 Fire Protection First Floor Plan

SCALE: 1/8" = 1'-0"

C:\Users\mfellman\Documents_Revit Backup\TRFD2302_Central23M_mfellman2423X2.rvt

2/25/2025 4:10:50 PM

H2M architects + engineers

538 Broad Hollow Road, 4th Floor East
Melville, NY 11747
631.756.8000 • www.h2m.com
NY Architecture & Landscape Architecture: No Certificate Required
NY Engineering Certificate of Authorization No.: 0018178

CONSULTANTS:

MARK	DATE	DESCRIPTION

STATE OF NEW YORK · JONATHAN RICHARD MURATORE · 096440-1 · LICENSED PROFESSIONAL ENGINEER

10/31/2027
Exp. Date

JONATHAN R. MURATORE, P.E.
NY PROFESSIONAL ENGINEER Lic. No. 096440

"IN ACCORDANCE WITH ARTICLE 145, SECTION 7209 OF THE NYS EDUCATION LAW, ALTERATION OF THIS DOCUMENT EXCEPT BY A LICENSED PROFESSIONAL IS ILLEGAL"

DESIGNED BY:	DRAWN BY:	CHECKED BY:	REVIEWED BY:
CRG	MPF/CRG	JRM	JRM
PROJECT No: TRFD 2302	DATE: FEBRUARY 2025	SCALE: AS SHOWN	

CLIENT

THIELLS ROSEVILLE FIRE DISTRICT

NEW 26-100 FIRE HEADQUARTERS

65 W RAMAPO ROAD
GARNERVILLE, NY 10923

CONTRACT

CONTRACT P
PLUMBING CONSTRUCTION

STATUS

FINAL BID DOCUMENT

SHEET TITLE

FIRE PROTECTION FIRST FLOOR PLAN

DRAWING No.

FP 100.00

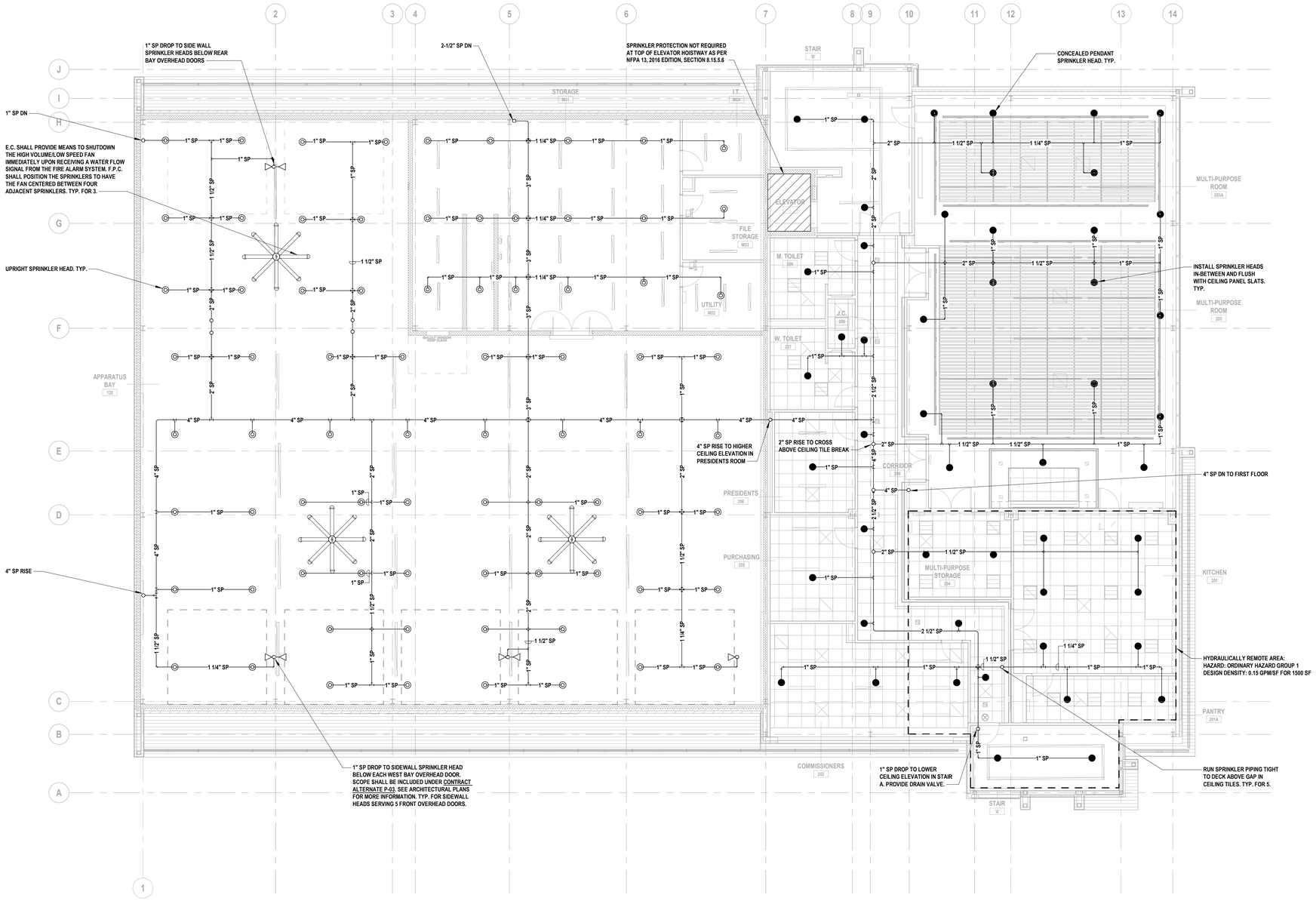

1 Fire Protection Second Floor Plan

SCALE: 1/8" = 1'-0"

C:\Users\mfeilman\Documents_Revit Backup\TRFD2302_Central23-M_mfeilmanZ4D2X2.rvt

2/25/2025 4:10:52 PM

H 2 M architects + engineers

538 Broad Hollow Road, 4th Floor East
Melville, NY 11747
631.756.8000 • www.h2m.com
NY Architecture & Landscape Architecture: No Certificate Required
NY Engineering Certificate of Authorization No.: 0018178

CONSULTANTS:

MARK	DATE	DESCRIPTION

STATE OF NEW YORK · JONATHAN RICHARD MURATORE · 096440-1 · LICENSED PROFESSIONAL ENGINEER

10/31/2027
Exp. Date

JONATHAN R. MURATORE, P.E.
NY PROFESSIONAL ENGINEER Lic. No. 096440

"IN ACCORDANCE WITH ARTICLE 145, SECTION 7209 OF THE NYS EDUCATION LAW, ALTERATION OF THIS DOCUMENT EXCEPT BY A LICENSED PROFESSIONAL IS ILLEGAL"

DESIGNED BY:	DRAWN BY:	CHECKED BY:	REVIEWED BY:
CRG	MPF/CRG	JRM	JRM
PROJECT No: TRFD 2302	DATE: FEBRUARY 2025	SCALE: AS SHOWN	

CLIENT

THIELLS ROSEVILLE FIRE DISTRICT

NEW 26-100 FIRE HEADQUARTERS

THIELLS 26 FD

65 W RAMAPO ROAD
GARNERVILLE, NY 10923

CONTRACT

CONTRACT P
PLUMBING CONSTRUCTION

STATUS

FINAL BID DOCUMENT

SHEET TITLE

FIRE PROTECTION SECOND FLOOR PLAN

DRAWING No.

FP 110.00

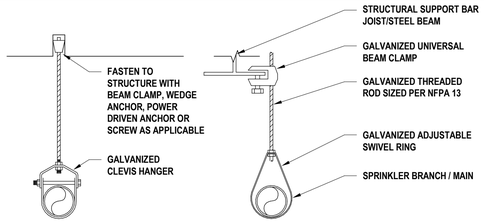

MAXIMUM DISTANCE BETWEEN HANGERS									
PIPE SIZE	1 IN	1-1/4 IN	1-1/2 IN	2 IN	2-1/2 IN	3 IN	4 IN	6 IN	8 IN
STEEL SPACING	12 FT	12 FT	15 FT	15 FT	15 FT	15 FT	15 FT	15 FT	15 FT
CPVC SPACING	6 FT	6 FT 6 IN	7 FT	8 FT	9 FT	10 FT	-	-	-

MAXIMUM UNSUPPORTED LENGTH BETWEEN END SPRINKLER AND THE LAST HANGER			
PIPE SIZE	1 IN	1-1/4 IN	1-1/2 IN AND LARGER
SPACING	12 FT	12 FT	15 FT

REFER TO NFPA 13 FOR COMPLETE HANGER INSTALLATION REQUIREMENTS.

1 Sprinkler Pipe Hanger
SCALE:N.T.S.

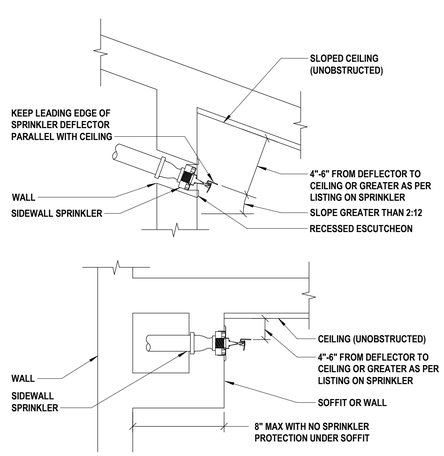

2 Sidewall Sprinkler
SCALE:N.T.S.

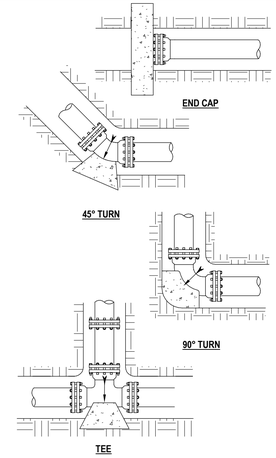

NOTES:

1. CONCRETE BLOCKING SHALL BE APPLIED ON ALL PIPE LINES 4-INCH IN DIAMETER AND LARGER AT ALL TEES, PLUGS, CAPS, AND AT BENDS DEFLECTING 22 1/2 DEFREES OR MORE. BLOCKING SHALL BE OF CONCRETE OF A MIX HAVING A COMPRESSIVE STRENGTH OF NOT LESS THAN 4,000 PSI, AND BLOCKING SHALL BE PLACED BETWEEN SOLID GROUND AND THE FITTING TO BE ANCHORED. THE BLOCKING SHALL BE SO PLACED THAT THE PIPE AND FITTING JOINTS WILL BE ACCESSIBLE FOR REPAIR.

2. THE SQUARE FOOT BEARING AREA OF THE BLOCKING ON SOLID GROUND SHALL BE INDICATED IN THE TABLE SHOWN OR AS INDICATED BY THE ENGINEER.

3. FOR ALL VERTICAL BENDS, 3/4-INCH DIAMETER TIE RODS AND PIPE CLAMPS OR RETAINER GLANDS SHALL BE PROVIDED IN ADDITION TO THE CONCRETE BLOCKING SPECIFIED ABOVE FOR BENDS DEFLECTING 22-1.2 DEGREES OR MORE.

THRUST AREA REQUIRED - SQUARE FEET				
PIPE SIZE	DEAD END OR TEE	90° BEND	45° BEND	22-1/2° BEND
4"	1	1-1/2	3/4	1/2
6"	2	3	2	1
8"	4	5-1/2	3	1
10"	6	8-1/2	4-1/2	2-1/2
12"	9	12	6-1/2	3-1/2
16"	12	15-1/2	8-1/2	4-1/2

3 Thrust Block
SCALE:N.T.S.

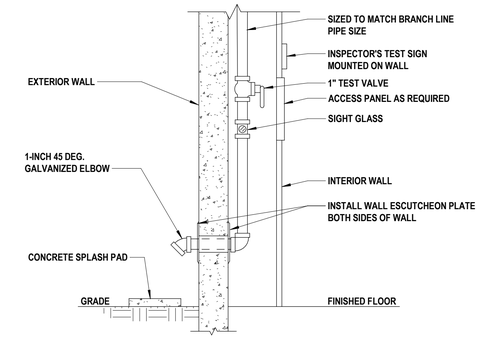

4 Inspector's Test Connection - Wet System
SCALE:N.T.S.

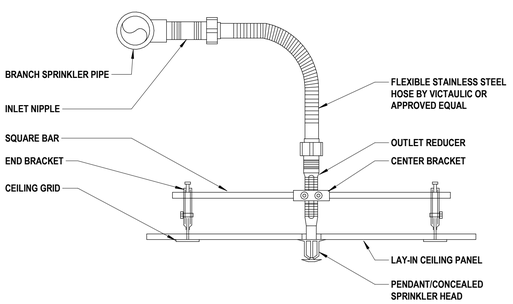

5 Flexible Sprinkler Hose Connection
SCALE:N.T.S.

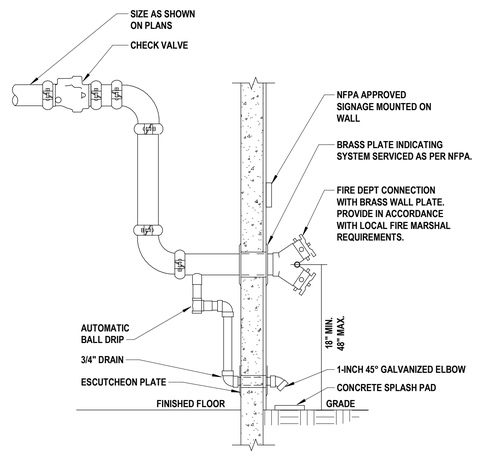

6 Fire Department Connection Detail - Wall Mounted
SCALE:N.T.S.

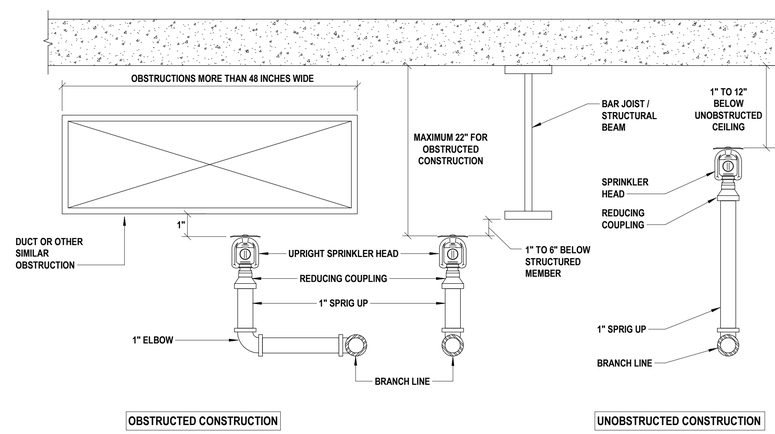

7 Upright Sprinkler Head Branch Line Connections
SCALE:N.T.S.

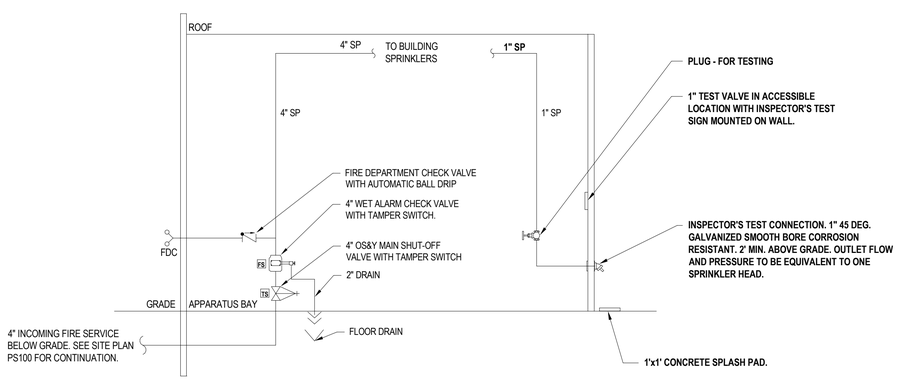

8 Fire Protection Riser Diagram
SCALE:N.T.S.

H2M architects + engineers

538 Broad Hollow Road, 4th Floor East
Melville, NY 11747
631.756.8000 • www.h2m.com
NY Architecture & Landscape Architecture: No Certificate Required
NY Engineering Certificate of Authorization No.: 0018178

CONSULTANTS:

MARK	DATE	DESCRIPTION

STATE OF NEW YORK · JONATHAN RICHARD MURATORE · 096440-1 · LICENSED PROFESSIONAL ENGINEER

10/31/2027
Exp. Date

JONATHAN R. MURATORE, P.E.
NY PROFESSIONAL ENGINEER Lic. No. 096440

"IN ACCORDANCE WITH ARTICLE 145, SECTION 7209 OF THE NYS EDUCATION LAW, ALTERATION OF THIS DOCUMENT EXCEPT BY A LICENSED PROFESSIONAL IS ILLEGAL"

DESIGNED BY:	DRAWN BY:	CHECKED BY:	REVIEWED BY:
CRG	MPF/CRG	JRM	JRM

PROJECT No:	DATE:	SCALE:
TRFD 2302	FEBRUARY 2025	AS SHOWN

CLIENT

THIELLS ROSEVILLE FIRE DISTRICT

NEW 26-100 FIRE HEADQUARTERS

THIELLS 26 FD

65 W RAMAPO ROAD GARNERVILLE, NY 10923

CONTRACT

CONTRACT P PLUMBING CONSTRUCTION

STATUS

FINAL BID DOCUMENT

SHEET TITLE

FIRE PROTECTION SPRINKLER DETAILS

DRAWING No.

FP 500.00

C:\Users\mfellman\Documents_Revit Backup\TRFD2302_Central23-M_mfellmanZ42X2.rvt
2/25/2025 4:10:53 PM

ABBREVIATIONS

AFF	ABOVE FINISHED FLOOR
BCU	BUILDING CONTROL UNIT
BTU	BRITISH THERMAL UNIT
CFH	CUBIC FEET PER HOUR
CFM	CUBIC FEET PER MINUTE
CLG	CEILING
COMM.	COMMUNICATION
CV	CONTROL VALVE
(D)	DEMOLISH
DB	DRY BULB
DCV	DEMAND CONTROLLED VENTILATION
DEG. F	DEGREES FAHRENHEIT
DIA	DIAMETER
DX	DIRECT EXPANSION
'E'	ELECTRICAL CONTRACTOR
(E)	EXISTING
EA	EACH
EAT	ENTERING AIR TEMPERATURE
EER	ENERGY EFFICIENCY RATING
ESP	EXTERNAL STATIC PRESSURE
FAI	FRESH AIR INTAKE
FD	FLOOR DRAIN
FLA	FULL LOAD AMPS
FT. H20	FEET OF WATER
'G'	GENERAL CONSTRUCTION CONTRACTOR
GPM	GALLONS PER MINUTE
GPH	GALLONS PER HOUR
H	HEIGHT
'H'	HVAC CONTRACTOR
HP	HORSEPOWER
IN.	INCHES
IN. W.C. (W.G.)	INCHES WATER COLUMN (WATER GAUGE)
KW	KILOWATTS
L	LENGTH
LAT	LEAVING AIR TEMPERATURE
LBS	POUNDS
LCD	LIQUID CRYSTAL DISPLAY
LDB	LEAVING DRY BULB TEMPERATURE
LWB	LEAVING WET BULB TEMPERATURE
LWT	LEAVING WATER TEMPERATURE
M	METER
MAX	MAXIMUM
MBH	1,000 BTU PER HOUR
MCA	MINIMUM CIRCUIT AMPACITY
MIN	MINIMUM
MNF	MANUFACTURER
N.C.	NORMALLY CLOSED
N.O.	NORMALLY OPEN
NFPA	NATIONAL FIRE PROTECTION ASSOCIATION
NPT	NATIONAL PIPE THREAD
NTS	NOT TO SCALE
OAI	OUTDOOR AIR INTAKE
OD	OUTER DIAMETER
OED	OPEN ENDED DUCT
'P'	PLUMBING CONTRACTOR
PD	PRESSURE DROP
PSIG	LBS / SQUARE INCH (GAUGE PRESSURE)
RD	ROOF DRAIN
RPM	REVOLUTIONS PER MINUTE
RPZ	REDUCED PRESSURE ZONE
SAT	SUPPLY AIR TEMPERATURE
SEER	SEASONAL ENERGY EFFICIENCY RATING
TEMP	TEMPERATURE
TG	TRANSFER GRILLE
TYP	TYPICAL
VFD	VARIABLE FREQUENCY DRIVE
W	WIDTH
WB	WET BULB
WMS	WIRE MESH SCREEN

DUCTWORK LEGEND

SYMBOL	ABBREV	DESCRIPTION
		NEW DUCTWORK WITH 45 DEGREE TAKE OFF
	VD	VOLUME DAMPER
	CD	ROUND SUPPLY CEILING DIFFUSER
	SEE AIR DEVICE SCHEDULE	SIDEWALL SUPPLY, RETURN OR EXHAUST
	SEE AIR DEVICE SCHEDULE	SQUARE SUPPLY CEILING DIFFUSER
	SEE AIR DEVICE SCHEDULE	CEILING RETURN OR EXHAUST GRILLE
		FLEX DUCT
	FC	FLEXIBLE CONNECTION
		TURNING VANES
		RECTANGULAR TO ROUND TRANSITION
	AL	ACOUSTICAL LINING
		END CAP
	SEE AIR DEVICE SCHEDULE	SUPPLY DIFFUSER WITH DIRECTIONAL FLOW (SOLID HATCH INDICATES BLANK OFF PANEL)
		SUPPLY DUCT DROP
		RETURN/EXHAUST DUCT DROP
		SUPPLY DUCT RISE
		RETURN/EXHAUST DUCT RISE
DSD	DSD	DUCT SMOKE DETECTOR
M	MD	MOTORIZED DAMPER WITH ACTUATOR
OR	AD	ACCESS DOOR
	FD/AD	FIRE DAMPER WITH ACCESS DOOR
	FD/AD	FIRE DAMPER AT FLOOR PENETRATION WITH ACCESS DOOR
	FSD/AD	FIRE SMOKE DAMPER WITH ACCESS DOOR
		WORK TO BE REMOVED
		POINT OF DISCONNECTION FROM EXISTING
		POINT OF RECONNECTION TO EXISTING

PIPING LEGEND

SYMBOL	ABBREV	DESCRIPTION
		NEW WORK
		WORK TO BE REMOVED
		PIPING DOWN/ PIPING UP
		BALL VALVE WITH HOSE END CONNECTION
	TH	THERMOMETER
	U	UNION
	FPC	FLEXIBLE PIPE CONNECTION/ FLEX PIPE
		DIRECTION OF FLOW
	PSR	PRESSURE SAFETY AND RELIEF VALVE
	PRV	PRESSURE REDUCING VALVE
	BV	BALL VALVE
	BA	BALANCING VALVE
	BFV	BUTTERFLY VALVE
		TEMPERATURE SENSOR WITH THERMOWELL
	GA	GATE VALVE
	GB	GLOBE VALVE
	AV	AUTOMATIC AIR VENT
	CV	2-WAY ELECTRONIC CONTROL VALVE
	CV	3-WAY ELECTRONIC CONTROL VALVE
	CV	2-WAY PNEUMATIC CONTROL VALVE
	CV	3-WAY PNEUMATIC CONTROL VALVE
		PLUG VALVE
	STR	STRAINER
	STR	STRAINER WITH BLOW OFF VALVE WITH HOSE END CONNECTION
	FD	FLOOR DRAIN
S		AIR SEPARATOR
F&T		STEAM TRAPS (INDICATE TYPE)
	CH	CHECK VALVE
	PG	PRESSURE GAUGE WITH GAUGE COCK
	RED	REDUCER
CO.	CO	CLEANOUT END CAP
		PIPE GUIDE
		PIPE ANCHOR
		CAPPED PIPE
		PUMP
		POINT OF DISCONNECTION FROM EXISTING
		POINT OF RECONNECTION TO EXISTING
	TDV	TRIPLE DUTY VALVE

CONTROLS LEGEND

SYMBOL	DESCRIPTION
C	CARBON MONOXIDE SENSOR
T	THERMOSTAT
S	DIGITAL TEMPERATURE SENSOR
H	HUMIDITY SENSOR
P	PRESSURE SENSOR
C2	CARBON DIOXIDE SENSOR
N2	NITROGEN DIOXIDE SENSOR
CH	NATURAL GAS SENSOR
F	FAN CONTROLLER

GENERAL NOTES

1. PROVIDE ALL MATERIALS AND EQUIPMENT AND PERFORM ALL LABOR REQUIRED TO INSTALL COMPLETE AND OPERABLE MECHANICAL SYSTEMS AS INDICATED ON THE DRAWINGS, AS SPECIFIED AND AS REQUIRED BY CODE.
2. THE CONTRACTOR, BY PRESENTING THEIR BID FOR THE WORK, REPRESENTS THAT HE/SHE HAS INSPECTED THE SITE AND IS COMPLETELY FAMILIAR WITH THE SCOPE OF WORK AND ALL FIELD CONDITIONS RELATED TO, AND AFFECTING THE WORK AND ITS PERFORMANCE. EXCEPTIONS AFFECTING THE WORK AND ITS PERFORMANCE, OR CONFLICTS BETWEEN FIELD CONDITIONS, SHALL BE BROUGHT TO THE ATTENTION OF THE ARCHITECT PRIOR TO THE SUBMISSION OF BIDS.
3. PERFORM ALL WORK IN ACCORDANCE WITH THE PLUMBING CODE, FIRE CODE, MECHANICAL CODE, ENERGY CONSERVATION CODE, AND FUEL GAS CODE OF NEW YORK STATE AND REQUIREMENTS OF THE LOCAL AUTHORITIES HAVING JURISDICTION.
4. COMPLY WITH THE NATIONAL ELECTRIC CODE AND THE REQUIREMENTS OF DIVISION 26 FOR ALL ELECTRICAL INSTALLATIONS.
5. FIRE STOP ALL OPENINGS IN FIRE RATED CONSTRUCTION FOR PIPING, DUCTWORK, CONDUIT, ETC. PROVIDE FIRE DAMPERS AND ACCESS DOORS IN ALL OPENINGS IN FIRE RATED FLOORS, PARTITIONS, AND WALLS FOR DUCTWORK AS PER THE MECHANICAL CODE OF NEW YORK STATE. (SEE ARCHITECTURAL DRAWINGS FOR LOCATIONS OF FIRE RATED CONSTRUCTION.)
6. DO NOT SCALE DRAWINGS. DRAWINGS FOR HVAC WORK ARE DIAGRAMMATIC AND ARE INTENDED TO CONVEY SCOPE AND GENERAL ARRANGEMENT ONLY. THE LOCATIONS OF ALL ITEMS SHOWN ON THE DRAWINGS OR CALLED FOR IN THE SPECIFICATIONS THAT ARE NOT DEFINITELY FIXED BY DIMENSIONS ARE APPROXIMATE. COORDINATE CONTRACT DOCUMENTS, PROJECT REQUIREMENTS, WORK OF OTHERS, AND EQUIPMENT AND MATERIALS PURCHASED WITH FIELD DIMENSIONS. INSTALL ALL EQUIPMENT AS PER MANUFACTURER'S REQUIREMENTS TO PROVIDE PROPER CLEARANCE FOR INSTALLATION, OPERATION, AND MAINTENANCE. CONTRACTOR'S INTENDED MEANS AND METHODS OF INSTALLATION AND CONTRACTOR'S FABRICATED ITEMS SHALL ENSURE A PROPER "FIT" AND INSTALLATION. BRING ANY CONFLICTS TO THE ATTENTION OF THE ARCHITECT/ENGINEER DURING THE SUBMITTAL PHASE FOR RESOLUTION PRIOR TO PURCHASING ANY EQUIPMENT.
7. MAINTAIN MAXIMUM HEADROOM AND SPACE CONDITIONS AT ALL POINTS. WHERE HEADROOM AND SPACE CONDITIONS APPEAR INADEQUATE, NOTIFY THE ARCHITECT/ENGINEER PRIOR TO PROCEEDING WITH INSTALLATION. MAINTAIN A MINIMUM OF 6'-8" CLEARANCE FROM FINISHED FLOOR TO UNDERSIDE OF PIPES, DUCTS, CONDUITS, SUSPENDED EQUIPMENT ETC., THROUGHOUT ACCESS ROUTES IN MECHANICAL ROOMS OR WALKING AREAS.
8. FIELD VERIFY AND COORDINATE ALL DUCT AND PIPING DIMENSIONS BEFORE FABRICATION. MAKE MODIFICATIONS IN THE LAYOUT AS NEEDED TO PREVENT CONFLICT WITH WORK OF OTHER TRADES OR FOR PROPER EXECUTION OF THE WORK. OBTAIN THE APPROVAL OF THE ARCHITECT/ENGINEER FOR MODIFICATIONS.
9. PROVIDE PRODUCTS OF ONE MANUFACTURER WHERE TWO OR MORE ITEMS OF THE SAME TYPE OF MATERIAL OR EQUIPMENT IS REQUIRED.
10. INSTALL ALL EQUIPMENT AND APPURTENANCES IN ACCORDANCE WITH MANUFACTURER'S RECOMMENDATIONS, CONTRACT DOCUMENTS, AND APPLICABLE CODES AND REGULATIONS. REFER TO DETAILS FOR ADDITIONAL PIPING AND EQUIPMENT INSTALLATION REQUIREMENTS.
11. LOCATE ALL TEMPERATURE, PRESSURE, AND FLOW MEASURING DEVICES IN ACCESSIBLE LOCATIONS WITH STRAIGHT SECTION OF PIPE OR DUCT UP- AND DOWNSTREAM AS RECOMMENDED BY THE MANUFACTURER TO ENSURE MANUFACTURER CERTIFIED ACCURACY.
12. COORDINATE ALL EQUIPMENT CONNECTIONS WITH MANUFACTURER'S CERTIFIED DRAWINGS. COORDINATE AND PROVIDE ALL PIPING AND DUCT TRANSITIONS REQUIRED FOR FINAL CONNECTIONS TO EQUIPMENT.
13. COORDINATE LOCATIONS AND SIZES OF ALL FLOOR, WALL, AND ROOF OPENINGS WITH ALL OTHER TRADES. COORDINATE ALL PIPING AND EQUIPMENT SUPPORTED FROM STRUCTURE WITH GENERAL CONSTRUCTION WORK.
14. COORDINATE INSTALLATION OF SUPPLY AND RETURN GRILLES WITH INSTALLATION OF FINISHED CEILINGS.
15. COMPLETE ALL PRESSURE TESTS BEFORE ANY MECHANICAL EQUIPMENT, DUCTWORK, OR PIPING INSULATION IS APPLIED.
16. TESTING, ADJUSTING, AND BALANCING AGENCY SHALL BE A MEMBER OF THE ASSOCIATED AIR BALANCE COUNCIL (AABC) OR THE NATIONAL ENVIRONMENTAL BALANCING BUREAU (NEBB). PERFORM ALL TESTING, ADJUSTING, AND BALANCING IN ACCORDANCE WITH THE SPECIFICATIONS.
17. MAKE ALL ATTACHMENTS TO JOISTS, TRUSSES, OR JOIST GIRDERS AT PANEL POINTS. PROVIDE FORGED OR CAST BEAM CLAMPS; THE USE OF ROLLED STEEL C-CLAMPS IS NOT PERMITTED. REFER TO SPECIFICATION SECTION 230529 FOR ADDITIONAL INFORMATION.
18. PROVIDE CONCRETE PADS A MINIMUM OF 6 INCHES HIGH FOR ALL FLOOR MOUNTED EQUIPMENT. EXTEND PAD 4 INCHES BEYOND THE EQUIPMENT ON ALL SIDES.
19. INTERNALLY LINE ALL SUPPLY, RETURN AND OUTDOOR AIR DUCTWORK WITHIN 20 FEET UPSTREAM AND DOWNSTREAM OF FANS/AIR HANDLING EQUIPMENT WITH 1" THICK ACOUSTIC DUCT LINER. INTERNALLY LINED DUCTWORK MEETING THIS REQUIREMENT SHALL ALSO BE PROVIDED WITH EXTERNALLY APPLIED INSULATION AS REQUIRED BY THE SPECIFICATIONS. SEE SPECIFICATION SECTION 230719 FOR ADDITIONAL REQUIREMENTS.
20. PROVIDE TRAPPED DRAIN PIPING FROM DRAIN PANS OF ALL COOLING COILS, FANS, AND OTHER ACTIVE DRAINS EXPOSED TO SYSTEM AIR STREAM. PROVIDE TRAP AT CONNECTION, WATER SEAL DEPTH 1 INCH GREATER THAN UNIT OPERATING PRESSURE. DIRECT DRAINS TO NEAREST FLOOR DRAIN, MOP SINK, OR OTHER LOCATION APPROVED BY ARCHITECT/ENGINEER.
21. INSTALL PIPING, DUCTWORK, AND CONDUIT CONCEALED IN AREAS HAVING HUNG CEILINGS AND/OR FURRED SPACES UNLESS OTHERWISE INDICATED ON THE DRAWINGS.

CONTRACT 'M' SCOPE NOTES

1. FURNISH ALL LOUVERS FOR INSTALLATION BY CONTRACT 'G'. SUBMIT LOUVER COLOR AND CONFIGURATION TO THE ARCHITECT/ENGINEER FOR APPROVAL.
2. INSTALL SMOKE DETECTORS IN DUCTWORK FOR AIR HANDLING UNITS RATED AT 2,000 CFM OR GREATER. SMOKE DETECTOR SUPPLY AND WIRING IS PART OF CONTRACT 'E'.
3. INSTALL SMOKE DETECTORS IN DUCTWORK WHERE A SMOKE DAMPER OR FIRE SMOKE DAMPER IS INSTALLED. SMOKE DETECTOR SUPPLY AND WIRING IS PAR OF CONTRACT 'E'.
4. FURNISH AND INSTALL ALL NECESSARY CONTROL WIRING, CONDUIT, AND ACCESSORIES AS REQUIRED TO PROVIDE FULLY FUNCTIONING SYSTEMS AND SEQUENCES OF OPERATION.
5. FURNISH ALL LINTELS FOR DUCT AND PIPE PENETRATIONS IN INTERIOR MASONRY WALLS FOR INSTALLATION BY CONTRACT 'G'. REFER TO A DRAWINGS AND S DRAWINGS FOR SIZES AND LOCATIONS.
6. FURNISH ALL SLEEVES FOR PIPE AND CONDUIT FLOOR, WALL, PARTITION, AND ROOF PENETRATIONS FOR INSTALLATION BY CONTRACT 'G'.
7. FURNISH ALL CURBS FOR ALL ROOF MOUNTED EQUIPMENT AND DUCT PENETRATIONS FOR INSTALLATION BY CONTRACT 'G'.
8. REMOVE CHASE ENCLOSURE COVER WHEN PERFORMING WORK IN ANY CHASE, AND REINSTALL THE CHASE ENCLOSURE COVER WHEN WORK IS COMPLETE.
9. PERFORM ALL CUTTING AND PATCHING AS REQUIRED IN THE EXECUTION OF THE WORK. FINISH PATCHING AND FLASHING IS PART OF CONTRACT 'G'

LEGENDS/ABBREVIATIONS NOTES

1. ABBREVIATIONS AND SYMBOLS ON THIS SHEET DO NOT DEFINE THE SCOPE OF WORK.

SYSTEM COMMISSIONING NOTES (NYS)

1. COMMISSION ALL NEW BUILDING MECHANICAL SYSTEMS IN ACCORDANCE WITH THE REQUIREMENTS OF THE 2020 NEW YORK STATE (NYS) ENERGY CONSERVATION CODE (ECC) SECTION C408. COMMISSIONING SHALL BE PERFORMED BY AN APPROVED THIRD-PARTY COMMISSIONING AGENCY HIRED BY THE OWNER. REFER TO SPECIFICATION SECTIONS 019113 - GENERAL COMMISSIONING REQUIREMENTS AND 230800 - COMMISSIONING OF MECHANICAL SYSTEMS FOR MORE INFORMATION.
2. PROVIDE DRAWINGS, OPERATION & MAINTENANCE (O&M) MANUALS, AND SYSTEM BALANCING REPORTS TO BUILDING OWNER OR OWNER'S AUTHORIZED AGENT WITHIN 90 DAYS OF THE DATE OF RECEIPT OF THE CERTIFICATE OF OCCUPANCY OR LETTER OF COMPLETION IN ACCORDANCE WITH THE 2020 NYS ECC SECTION C408.2.5.
3. COMMISSIONING AGENT SHALL PROVIDE FINAL COMMISSIONING REPORT TO THE BUILDING OWNER OR OWNER'S AUTHORIZED AGENT WITHIN 90 DAYS OF THE RECEIPT OF THE CERTIFICATE OF OCCUPANCY OR LETTER OF COMPLETION IN ACCORDANCE WITH THE REQUIREMENTS OF THE 2020 NYS ECC SECTION C408.2.5.4.
4. CONTRACTOR SUPPORT FOR COMMISSIONING AGENT TO BE INCLUDED IN BASE SCOPE.

BID ALTERNATES:

M-01. PROVIDE PRICING FOR BUILDING MANAGEMENT SYSTEM (BMS). BMS SHALL INCLUDE ALL EQUIPMENT. BMS SHALL BE OPEN PROTOCOL. PROVIDE GRAPHICS, PROVIDE WEB BASED OPEN PROTOCAL JOHNSON FX-90 SYSTEM BMS SYSTEM INTERGRATE ALL BACKNET READY EQUIPMENT. PROVIDE BACNET THERMOSTAT FOR ALL NON BMS READY EQUIPMENT. CAPABILITIES TO READ AND WRITE. SCHEDULING AND ALARMS FOR ALL SYSTEMS.

H2M architects + engineers

538 Broad Hollow Road, 4th Floor East
Melville, NY 11747
631.756.8000 • www.h2m.com
NY Architecture & Landscape Architecture: No Certificate Required
NY Engineering Certificate of Authorization No.: 0018178

CONSULTANTS:

MARK	DATE	DESCRIPTION

STATE OF NEW YORK · JOHN M. LAHEY · 101303 · LICENSED PROFESSIONAL ENGINEER

JOHN M. LAHEY, P.E.
NY PROFESSIONAL ENGINEER Lic. No. 101303

Exp. Date

"IN ACCORDANCE WITH ARTICLE 145, SECTION 7209 OF THE NYS EDUCATION LAW, ALTERATION OF THIS DOCUMENT EXCEPT BY A LICENSED PROFESSIONAL IS ILLEGAL"

DESIGNED BY:	DRAWN BY:	CHECKED BY:	REVIEWED BY:
JML	BFB	JML	JML
PROJECT No: TRFD 2302	DATE: FEBRUARY 2025	SCALE: AS SHOWN	

CLIENT

THIELLS ROSEVILLE FIRE DISTRICT

NEW 26-100 FIRE HEADQUARTERS

THIELLS 26 FD

65 W RAMAPO ROAD
GARNERVILLE, NY 10923

CONTRACT

CONTRACT M
HVAC CONSTRUCTION

STATUS

FINAL BID DOCUMENT

SHEET TITLE

HVAC GENERAL NOTE AND LEGENDS

DRAWING No.

M 001.00

C:\Users\kmcdonald\Documents\TRFD2302_Central24-M_kmcdonald(D7NVD.rvt

2/25/2025 1:21:50 PM

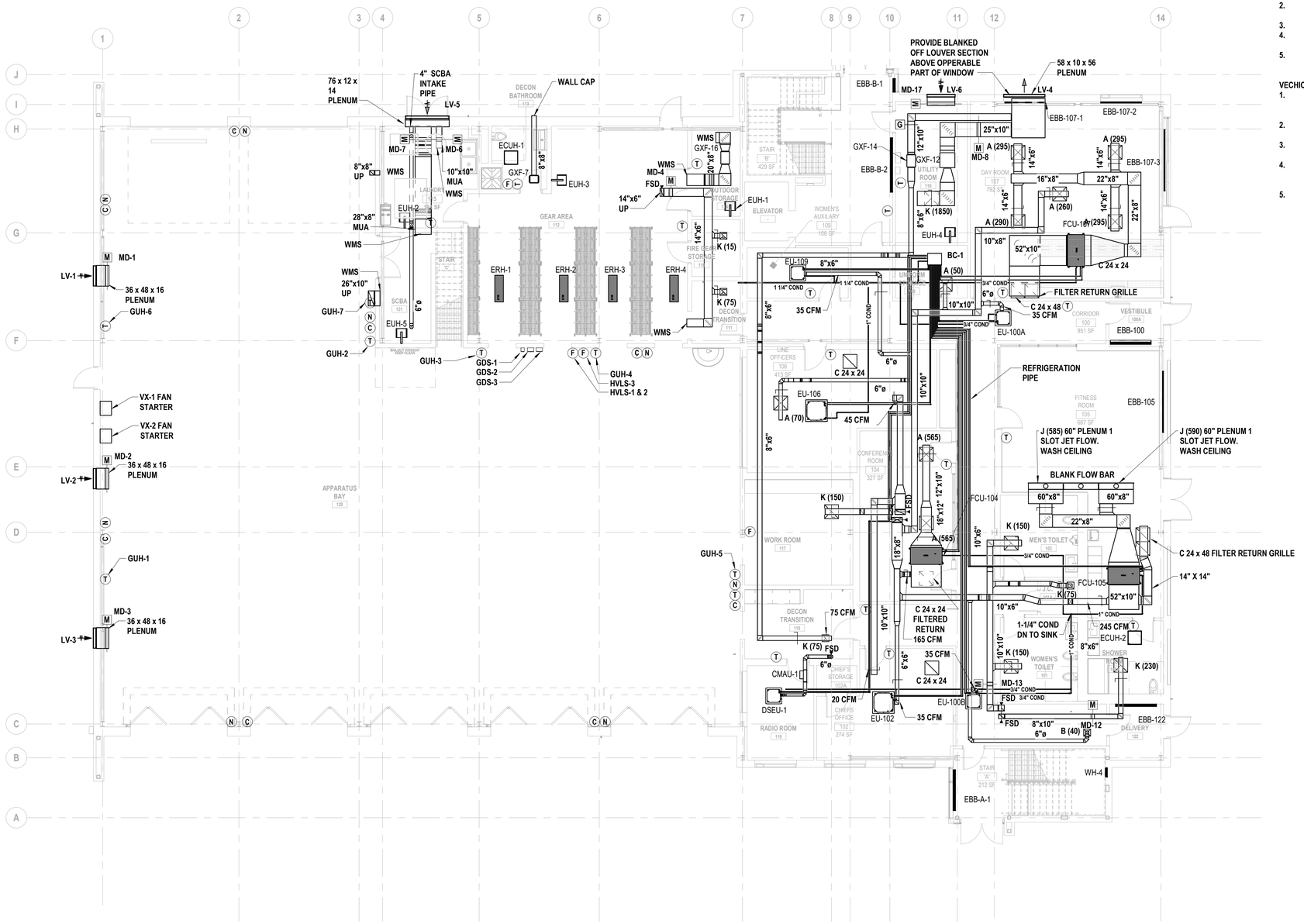

1 HVAC FIRST FLOOR PLAN
SCALE: 1/8" = 1'-0"

GENERAL NOTES:

1. REFRIGERANT PIPING IS SCHEMATIC, COORDINATE REFRIGERANT PIPE SIZE WITH MANUFACTURER. PROVIDE PIPING SHOP DRAWING FROM MANUFACTURER FOR REVIEW
2. ROUTE CONDENSATE TO NEAREST JANITOR SINK OR FLOOR DRAIN AS SHOWN. ALL CONDENSATE PIPING TO BE SLOPED 1/8"-1'-0" MINIMUM TOWARDS DRAIN.
3. MAINTAIN 10'-0" BETWEEN AIR INTAKES AND EXHAUST OUTLETS.
4. ALL DUCTS ARE CLEAR INSIDE DIMENSIONS . REFER TO SPECIFICATIONS FOR ALL DUCT CONSTRUCTION REQUIREMENTS
5. ALL SUPPLY AND EXHAUST BRANCH DUCTWORK SHALL BE PROVIDED WITH VOLUME DAMPERS.

VECHICLE EXHAUST (VX) SYSTEM NOTES:

1. VX SYSTEM SHALL BE PURCHASED BY THE OWNER AND INSTALLED BY MANUFACTURER. THIS INCLUDES ALL VX EQUIPMENT SUCH AS HOSES, RAILS, PULLEYS, MAGNETIC CONNECTIONS, ETC., EXCEPT FOR ITEMS IN NOTE 2.
2. CONTRACT 'M' SHALL BE RESPONSIBLE TO INSTALL EXHAUST FAN, EXTERIOR PENETRATIONS, ETC. ASSOCIATED WITH VX SYSTEM, AS SHOWN ON PLAN.
3. CONTRACT 'M' SHALL COORDINATE CLOSELY WITH THE MANUFACTURER TO VERIFY THE FINAL LAYOUT AND LOCATIONS OF ALL VX EQUIPMENT
4. LOCATION OF VX EQUIPMENT TO BE COORDINATED WITH LIGHTING AND OTHER ITEMS HUNG FROM ROOF STRUCTURE OR MOUNTED TO THE FLOOR. COORDINATE WITH ALL OTHER CONTRACTS
5. VX MANUFACTURER SHALL PROVIDE DUCTWORK LAYOUT.

H2M architects + engineers

538 Broad Hollow Road, 4th Floor East
Melville, NY 11747
631.756.8000 • www.h2m.com
NY Architecture & Landscape Architecture: No Certificate Required
NY Engineering Certificate of Authorization No.: 0018178

CONSULTANTS:

MARK	DATE	DESCRIPTION

STATE OF NEW YORK · JOHN M. LAHEY · 101303 · LICENSED PROFESSIONAL ENGINEER

JOHN M. LAHEY, P.E.
NY PROFESSIONAL ENGINEER Lic. No. 101303 Exp. Date
"IN ACCORDANCE WITH ARTICLE 145, SECTION 7209 OF THE NYS EDUCATION LAW, ALTERATION OF THIS DOCUMENT EXCEPT BY A LICENSED PROFESSIONAL IS ILLEGAL"

DESIGNED BY:	DRAWN BY:	CHECKED BY:	REVIEWED BY:
JML	BFB	JML	JML
PROJECT No: TRFD 2302	DATE: FEBRUARY 2025	SCALE: AS SHOWN	

CLIENT

THIELLS ROSEVILLE FIRE DISTRICT

NEW 26-100 FIRE HEADQUARTERS

THIELLS 26 FD

65 W RAMAPO ROAD
GARNERVILLE, NY 10923

CONTRACT

CONTRACT M
MECHANICAL CONSTRUCTION

STATUS

FINAL BID DOCUMENT

SHEET TITLE

HVAC FIRST FLOOR PLAN

DRAWING No.

M 110.00

C:\Users\kmcdonald\Documents\TRFD2302_Central23-M_kmcdonald07NVD.rvt

2/25/2025 1:21:57 PM

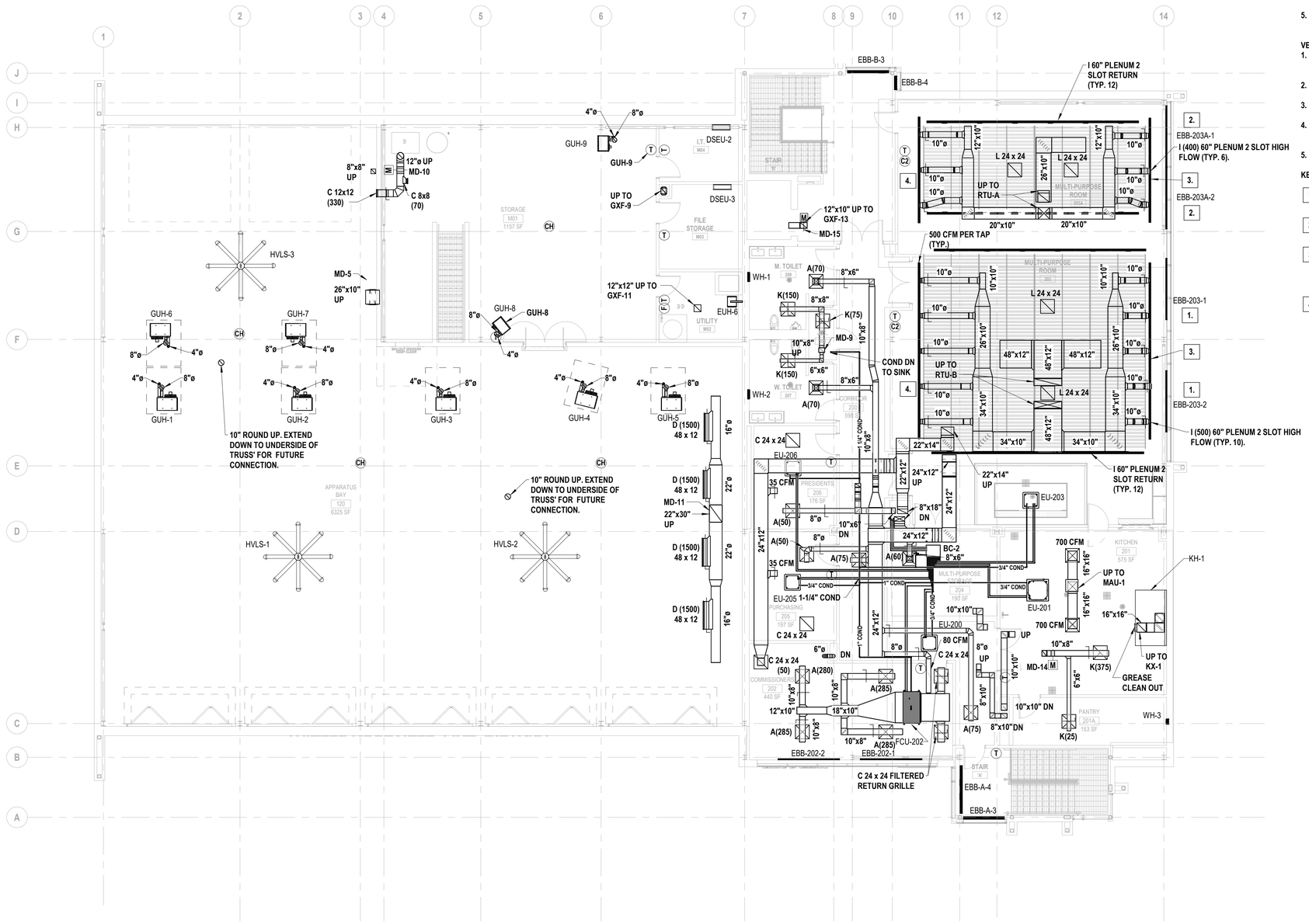

1 HVAC SECOND FLOOR PLAN
SCALE: 1/8" = 1'-0"

GENERAL NOTES:

1. REFRIGERANT PIPING IS SCHEMATIC, COORDINATE REFRIGERANT PIPE SIZE WITH MANUFACTURER. PROVIDE PIPING SHOP DRAWING FROM MANUFACTURER FOR REVIEW
2. ROUTE CONDENSATE TO NEAREST JANITOR SINK OR FLOOR DRAIN AS SHOWN. ALL CONDENSATE PIPING TO BE SLOPED 1/8"-1'-0" MINIMUM TOWARDS DRAIN.
3. MAINTAIN 10'-0" BETWEEN AIR INTAKES AND EXHAUST OUTLETS.
4. ALL DUCTS ARE CLEAR INSIDE DIMENSIONS . REFER TO SPECIFICATIONS FOR ALL DUCT CONSTRUCTION REQUIREMENTS
5. ALL SUPPLY AND EXHAUST BRANCH DUCTWORK SHALL BE PROVIDED WITH VOLUME DAMPERS.

VECHICLE EXHAUST (VX) SYSTEM NOTES:

1. VX SYSTEM SHALL BE PURCHASED BY THE OWNER AND INSTALLED BY MANUFACTURER. THIS INCLUDES ALL VX EQUIPMENT SUCH AS HOSES, RAILS, PULLEYS, MAGNETIC CONNECTIONS, ETC., EXCEPT FOR ITEMS IN NOTE 2.
2. CONTRACT 'M' SHALL BE RESPONSIBLE TO INSTALL EXHAUST FAN, EXTERIOR PENETRATIONS, ETC. ASSOCIATED WITH VX SYSTEM, AS SHOWN ON PLAN.
3. CONTRACT 'M' SHALL COORDINATE CLOSELY WITH THE MANUFACTURER TO VERIFY THE FINAL LAYOUT AND LOCATIONS OF ALL VX EQUIPMENT
4. LOCATION OF VX EQUIPMENT TO BE COORDINATED WITH LIGHTING AND OTHER ITEMS HUNG FROM ROOF STRUCTURE OR MOUNTED TO THE FLOOR. COORDINATE WITH ALL OTHER CONTRACTS
5. VX MANUFACTURER SHALL PROVIDE DUCTWORK LAYOUT.

KEYED NOTES:

1. ELECTRIC BASEBOARD TO BE CONTROLLED BY THERMOSTAT IN MULTIPURPOSE ROOM 203. ELECTRIC BASEBOARD TO BE STAGE 2
2. ELECTRIC BASEBOARD TO BE CONTROLLED BY THERMOSTAT IN MULTIPURPOSE ROOM 203A. ELECTRIC BASEBOARD TO BE STAGE 2
3. CONFIGURE SLOTS TO DISTRIBUTE AIR IN BOTH DIRECTIONS. THE SLOT CLOSEST TO THE WINDOWS SHALL DISTRUBUTE AIR TOWARDS WINDOWS. THE SLOT FURTHEST FROM THE WINDOWS SHALL DISTRIBUTE AIR TOWARDS THE CENTER OF THE ROOM (TYP.).
4. CONFIGURE SLOTS TO DISTRIBUTE AIR IN BOTH DIRECTIONS. THE SLOT CLOSEST TO THE WALL SHALL DISTRUBUTE AIR DOWN. THE SLOT FURTHEST FROM THE WALL SHALL DISTRIBUTE AIR TOWARDS THE CENTER OF THE ROOM (TYP.).

H2M architects + engineers

538 Broad Hollow Road, 4th Floor East
Melville, NY 11747
631.756.8000 • www.h2m.com
NY Architecture & Landscape Architecture: No Certificate Required
NY Engineering Certificate of Authorization No.: 0018178

CONSULTANTS:

MARK	DATE	DESCRIPTION

STATE OF NEW YORK · JOHN M. LAHEY · 101303 · LICENSED PROFESSIONAL ENGINEER

JOHN M. LAHEY, P.E.
NY PROFESSIONAL ENGINEER Lic. No. 101303 — Exp. Date
"IN ACCORDANCE WITH ARTICLE 145, SECTION 7209 OF THE NYS EDUCATION LAW, ALTERATION OF THIS DOCUMENT EXCEPT BY A LICENSED PROFESSIONAL IS ILLEGAL"

DESIGNED BY:	DRAWN BY:	CHECKED BY:	REVIEWED BY:
JML	BFB	JML	JML
PROJECT No: TRFD 2302	DATE: FEBRUARY 2025	SCALE: AS SHOWN	

CLIENT

THIELLS ROSEVILLE FIRE DISTRICT

NEW 26-100 FIRE HEADQUARTERS

THIELLS 26 FD

65 W RAMAPO ROAD
GARNERVILLE, NY 10923

CONTRACT
CONTRACT M
MECHANICAL CONSTRUCTION

STATUS
FINAL BID DOCUMENT

SHEET TITLE
HVAC SECOND FLOOR PLAN

DRAWING No.
M 111.00

C:\Users\kmcdonald\Documents\TRFD2302_Central23-M_kmcdonaldDTNVD.rvt
2/25/2025 1:22:02 PM

VECHICLE EXHAUST (VX) SYSTEM NOTES:

1. VX SYSTEM SHALL BE PURCHASED BY THE OWNER AND INSTALLED BY MANUFACTURER. THIS INCLUDES ALL VX EQUIPMENT SUCH AS HOSES, RAILS, PULLEYS, MAGNETIC CONNECTIONS, ECT.
2. CONTRACT 'M' SHALL BE RESPONSIBLE TO INSTALL ALL ASSOCIATED DUCTWORK, EXHUAST FAN, EXTERIOR PENETRATIONS, ETC. ASSOCIATED WITH VX SYSTEM
3. CONTRACT 'M' SHALL COORDINATE CLOSELY WITH THE MANUFACTURER TO VERIFY THE FINAL LAYOUT AND LOCATIONS OF ALL VX EQUIPMENT
4. LOCATION OF VX EQUIPMENT TO BE COORDINATED WITH LIGHTING AND OTHER ITEMS HUNG FROM ROOF STRUCTURE OR MOUNTED TO THE FLOOR. COORDINATE WITH ALL OTHER CONTRACTS
5. VX MANUFACTURER SHALL PROVIDE DUCTWORK LAYOUT, VX DUCTWORK AND SIZES SHOWN ARE FOR REFERENCE ONLY.

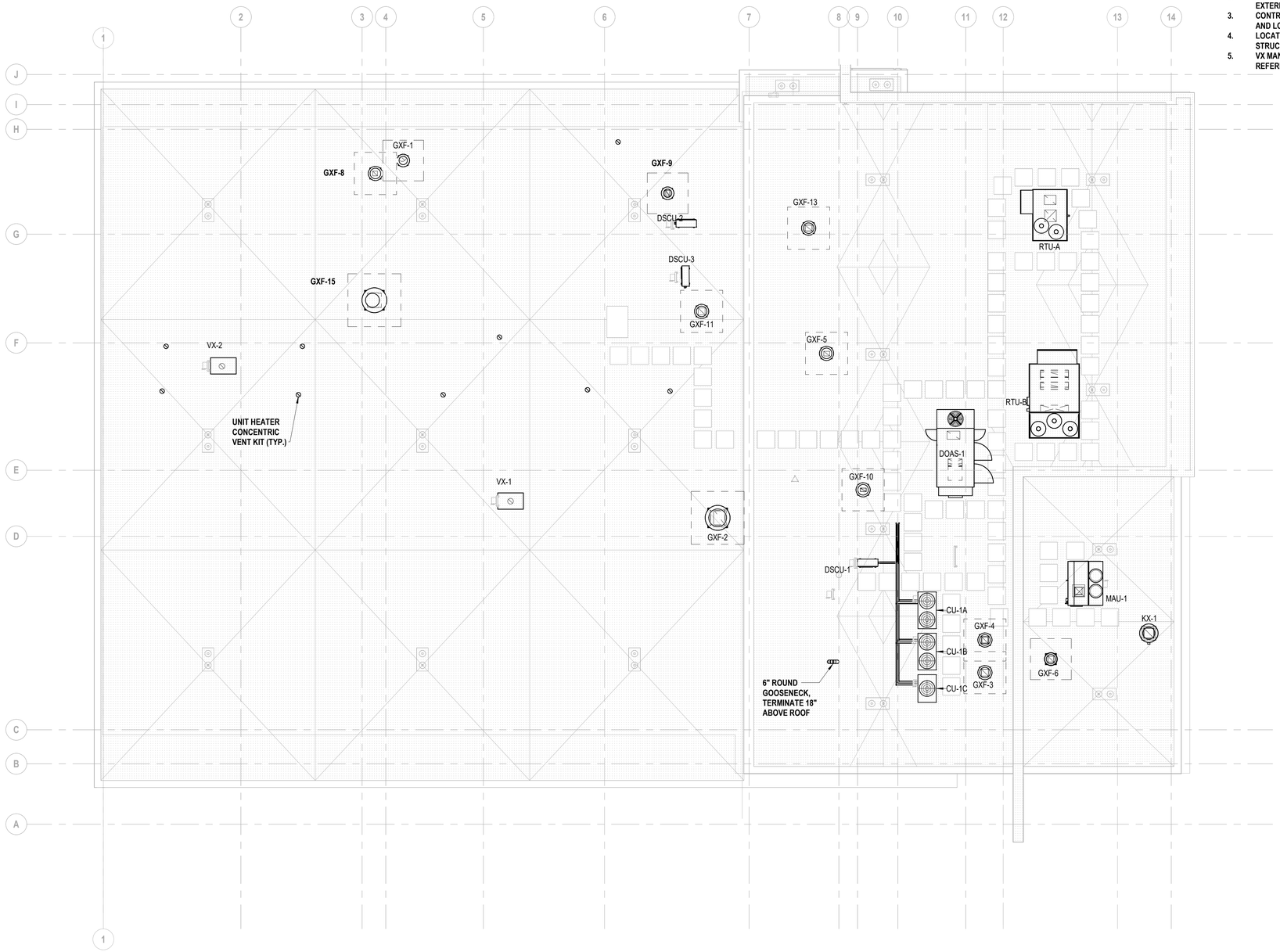

1 HVAC ROOF PLAN
SCALE: 1/8" = 1'-0"

H2M architects + engineers

538 Broad Hollow Road, 4th Floor East
Melville, NY 11747
631.756.8000 • www.h2m.com
NY Architecture & Landscape Architecture: No Certificate Required
NY Engineering Certificate of Authorization No.: 0018178

CONSULTANTS:

MARK	DATE	DESCRIPTION

STATE OF NEW YORK · JOHN M. LAHEY · 101303 · LICENSED PROFESSIONAL ENGINEER

JOHN M. LAHEY, P.E.
NY PROFESSIONAL ENGINEER Lic. No. 101303
Exp. Date

"IN ACCORDANCE WITH ARTICLE 145, SECTION 7209 OF THE NYS EDUCATION LAW, ALTERATION OF THIS DOCUMENT EXCEPT BY A LICENSED PROFESSIONAL IS ILLEGAL"

DESIGNED BY:	DRAWN BY:	CHECKED BY:	REVIEWED BY:
JML	BFB	JML	JML
PROJECT No: TRFD 2302	DATE: FEBRUARY 2025		SCALE: AS SHOWN

CLIENT

THIELLS ROSEVILLE FIRE DISTRICT

NEW 26-100 FIRE HEADQUARTERS

THIELLS 26 FD

65 W RAMAPO ROAD GARNERVILLE, NY 10923

CONTRACT

CONTRACT M MECHANICAL CONSTRUCTION

STATUS

FINAL BID DOCUMENT

SHEET TITLE

HVAC ROOF PLAN

DRAWING No.

M 131.00

C:\Users\kmcdonald\Documents\TRFD2302_Central23-M_kmcdonald\DTNVD.rvt

2/25/2025 1:22:05 PM

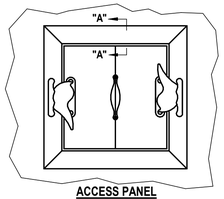

ACCESS PANEL

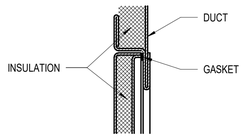

SECTION "A-A"

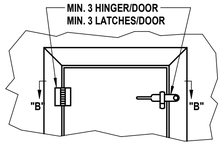

ACCESS DOOR

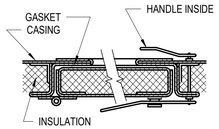

SECTION "B-B"

NOTES:

1. LATCHES SHALL BE OF THE WEDGE TYPE TO CLOSE DOORS TIGHTLY.
2. HINGES ON THE ACCESS DOORS SHALL HAVE NON-CORROSIVE PINS.
3. PROVIDE ACCESS DOORS ON AIR HANDLING UNITS AND DUCTWORK INSTALLED IN EQUIPMENT ROOMS. PROVIDE ACCESS PANELS ON ALL EQUIPMENT AND DUCTWORK INSTALLED ABOVE FINISHED CEILINGS WHERE SPACE LIMITATIONS DO NOT ALLOW HINGED DOORS TO OPEN.

1 ACCESS DOOR & PANEL DETAILS
SCALE:NTS

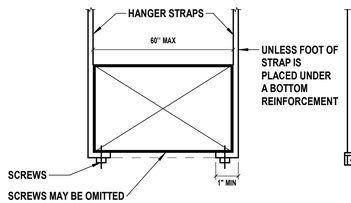

STRAP HANGER

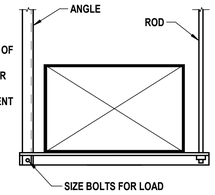

TRAPEZE HANGER

NOTES:

1. SIZE ALL SUPPORTS IN ACCORDANCE WITH THE SMACNA DUCT CONSTRUCTION STANDARDS, LATEST EDITION.

2 HANGER DETAIL
SCALE:NTS

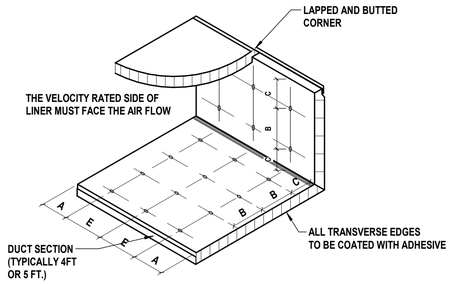

MAXIMUN SPACING FOR FASTENERS. ACTUAL INTERVALS ARE APPROXIMATE.

LINER ADHERED TO THE DUCT WITH 90% MIN. AREA COVERAGE OF ADHESIVE

VELOCITY*	DIMENSIONS			
	A	B	C	E
0-1500 FPM	3"	12"	4"	18"
1501-3500 FPM	3"	6"	4"	16"

*UNLESS A LOWER LEVEL IS SET BY MANUFACTURER OR LISTING AGENCY

3 ACOUSTICAL LINER FASTENING DETAIL
SCALE:NTS

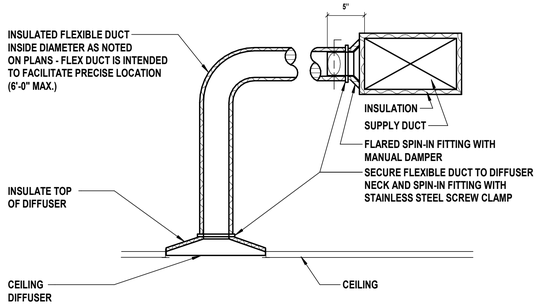

4 CEILING DIFFUSER CONNECTION
SCALE:NTS

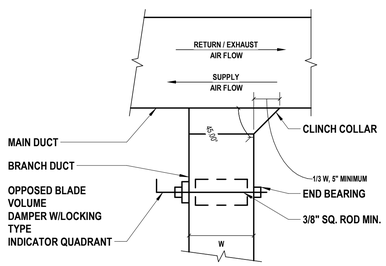

NOTES:

1. FURNISH THIS TYPE OF CONNECTION WHEN SINGLE LINE DUCTWORK IS INDICATED AS SHOWN FOR LOW PRESSURE BRANCHES WITH LESS THAN 33% CAPACITY OF MAIN DUCT.

5 Duct Branch Takeoff for Low Pressure Ductwork
SCALE:NTS

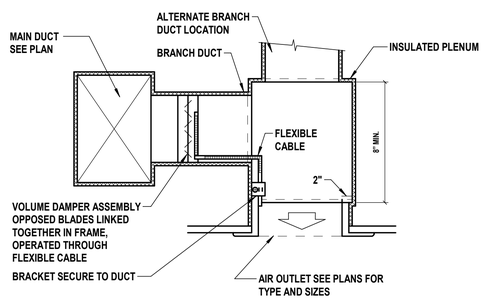

6 DIFFUSER LINEAR
SCALE:NTS

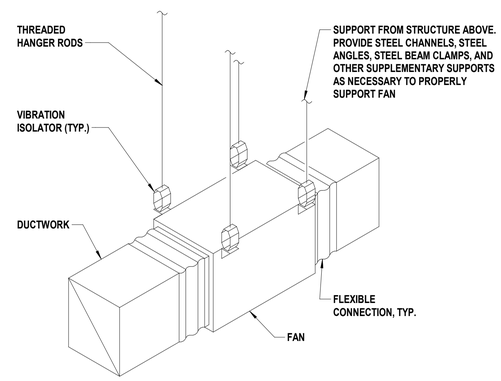

7 Inline Fan Hanging
SCALE: 1" = 1'-0"

HANGERS MUST NOT DEFORM DUCT SHAPE

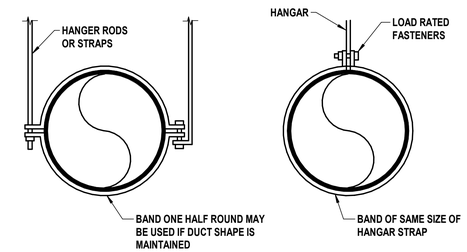

DUCT DIAMETER	BLK. OR GALV. ROD	GALVE STEEL STRAP
TO 10"	1/4"	1" X 22 GA.
11" TO 18"	1/4"	1" X 22 GA.
19" TO 24"	1/4"	1" X 22 GA.

NOTES:

1. SPACING 8'-0" ON CENTERS MAX

8 ROUND DUCT HANGERS
SCALE:NTS

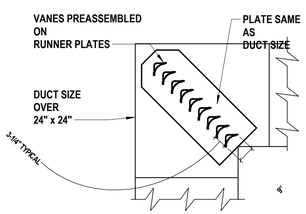

SQUARE ELBOW WITH TYPE "A" DOUBLE THICKNESS VANES

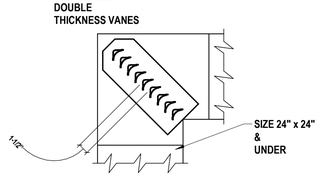

SQUARE ELBOW WITH TYPE "B" DOUBLE THICKNESS VANES.

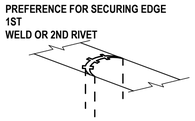

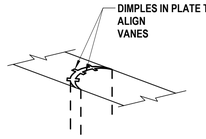

NOTE:

1. USE GALVANIZED STEEL FOR VANES IN EITHER STEEL OR ALUMINUM DUCTWORK.

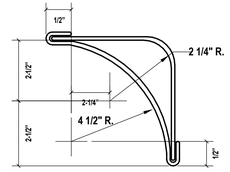

TYPE "A"

TYPE "A" DOUBLE THICKNESS VANES FOR USE IN DUCTS GREATER THAN 24" x 24" IN SIZE. USE SAME GAUGE GALVANIZED IRON AS DUCT NOT TO EXCEED 20 GAUGE.

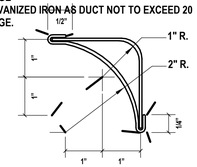

TYPE "B"

DOUBLE THICKNESS VANES FOR USE IN DUCTS 24" x 24" AND UNDER

9 Double Thickness Turning Vanes Detail
SCALE:NTS

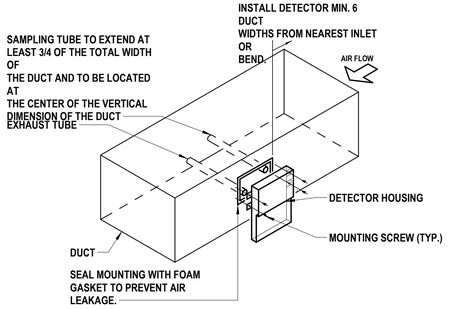

NOTES:

1. NEW DUCT SMOKE DETECTORS SHALL BE FURNISHED AND WIRED BY ELECTRICAL CONTRACTOR . INTERFACE OF NEW DUCT SMOKE DETECTORS WITH BUILDING FIRE ALARM SYSTEM BY ELECTRICAL CONTRACTOR.
2. NEW DUCT SMOKE DETECTOR SHALL BE INSTALLED IN DUCTWORK BY MECHANICAL CONTRACTOR

10 Duct Mounting Smoke Detector Detail
SCALE:NTS

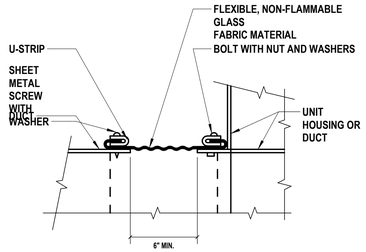

11 Flexible Duct Connection
SCALE:NTS

H2M architects + engineers

538 Broad Hollow Road, 4th Floor East
Melville, NY 11747
631.756.8000 • www.h2m.com
NY Architecture & Landscape Architecture: No Certificate Required
NY Engineering Certificate of Authorization No.: 0018178

CONSULTANTS:

MARK	DATE	DESCRIPTION

JOHN M. LAHEY, P.E.
NY PROFESSIONAL ENGINEER Lic. No. 101303

Exp. Date

"IN ACCORDANCE WITH ARTICLE 145, SECTION 7209 OF THE NYS EDUCATION LAW, ALTERATION OF THIS DOCUMENT EXCEPT BY A LICENSED PROFESSIONAL IS ILLEGAL"

DESIGNED BY:	DRAWN BY:	CHECKED BY:	REVIEWED BY:
Designer	Author	Checker	Approver

PROJECT No:	DATE:	SCALE:
TRFD 2302	FEBRUARY 2025	AS SHOWN

CLIENT

THIELLS ROSEVILLE FIRE DISTRICT

NEW 26-100 FIRE HEADQUARTERS

65 W RAMAPO ROAD
GARNERVILLE, NY 10923

CONTRACT

CONTRACT M
HVAC CONSTRUCTION

STATUS

FINAL BID DOCUMENT

SHEET TITLE

HVAC
DETAILS (1 OF 2)

DRAWING No.

M 500.00

C:\Users\kmcdonald\Documents\TRFD2302_Central23-M_kmcdonaldD7NVDJ.rvt

2/25/2025 1:22:06 PM

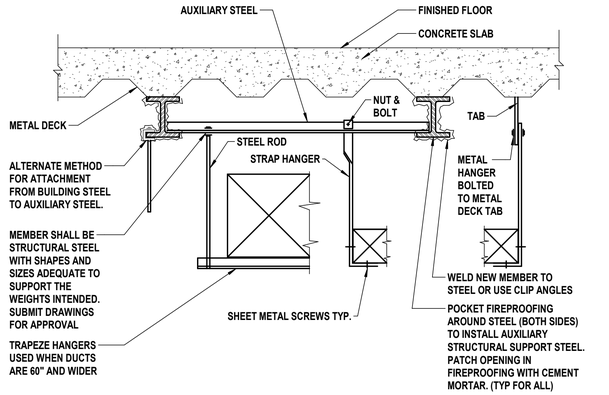

NOTES:

1. DUCTS SHALL NOT BE HUNG FROM OR SUPPORTED BY HUNG CEILING.
2. FOR DUCTS NOT EXCEEDING 2 SQ. FT. IN CROSS-SECTIONAL AREA, HANGERS SHALL BE OF METAL NOT LESS THAN 1/16"
3. FOR DUCTS LARGER THAN 2 SQ. FT. IN CROSS-SECTIONAL AREA, HANGERS SHALL BE OF METAL NOT LESS THAN 1"x1/8"
4. FOR ALL DUCTS, HANGERS SHALL BE TURNED UNDER AND FASTENED TO THE BOTTOM OF DUCTS AS SHOWN ABOVE.
5. WHERE CROSS-SECTIONAL AREA OF DUCT EXCEEDS 8 SQ. FT., HANGERS SHALL BE SPACED NOT MORE THAN 4 FT. ON CENTERS.

1 DUCT SUPPORT ATTACHMENT TO I-BEAM
SCALENTS

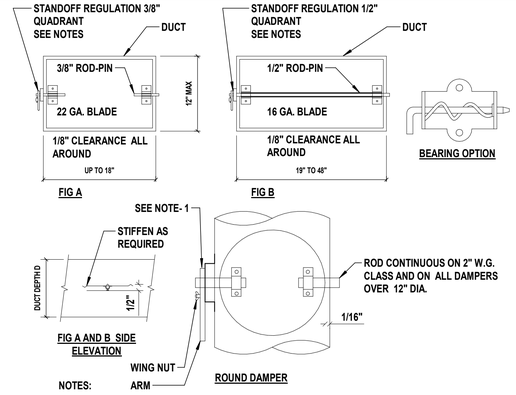

NOTES:

1. PROVIDE 2" HIGH STANDOFF REGULATORS FOR EXTERNALLY INSULATED DUCTWORK. PROVIDE REGULATORS WITH SEALS. DURO-DYNE MODEL E50.
2. STANDOFF BASE HEIGHT TO MATCH INSULATION THICKNESS. BASE CONSTRUCTION 16 GAUGE.
3. RAPIT DAMPER REGULATORS AND JIFFY DAMPERS ARE NOT ACCEPTABLE ON RECTANGULAR OR ROUND DUCTWORK.

2 Volume Dampers - Single Blade Type
SCALE: NTS

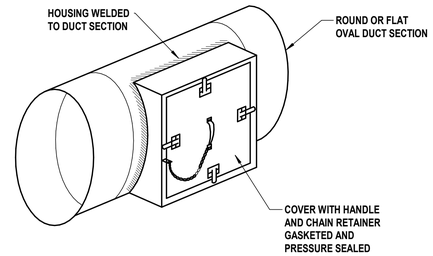

3 ACCESS SECTION FOR ROUND/OVAL DUCT
SCALENTS

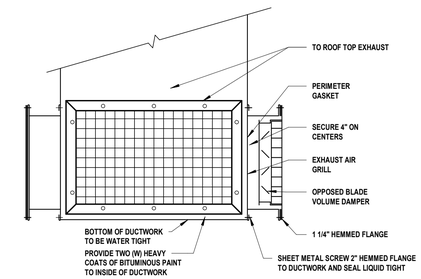

4 EXHAUSTED AIR REGISTER MOUNTING DETAIL
SCALENTS

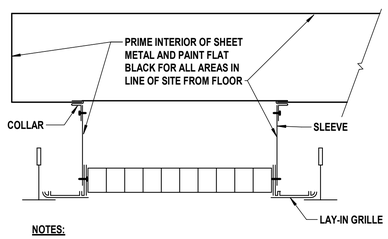

NOTES:

1. PROVIDE A GRILLE WITH A LAY-IN ALUMINUM FRAME/BORDER
2. PROVIDE CONCEALED SCREW HOLES IN NECK.
3. PROVIDE CLINCH LOCK DUCT COLLAR AND TELESCOPE SLEEVE.
4. SECURE GRILLE FRAME/TO SLEEVE AND DUCT COLLAR TO SLEEVE.

5 DUCTED EXHAUST CEILING GRILLE DETAIL
SCALENTS

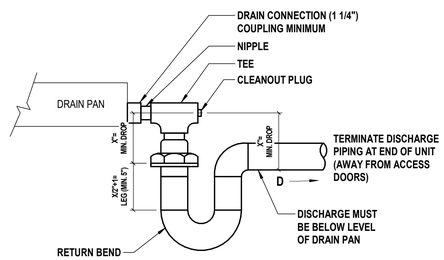

X = NEGATIVE INTERNAL STATIC PRESSURE AT FAN INLET (IN.)

NOTES:

1. ALLOW SUFFICIENT SPACE BELOW DRAIN PAN FOR TRAP.
2. PITCH DRAIN FOR PROPER RUN-OFF
3. MANUALLY PRIM FILL TRAP BEFORE START-UP TO FORM INITIAL DRAIN SEAL
4. SUPPORT LENGTHY DRAIN LINES TO PREVENT SAG AND CONDENSATE
5. PROVIDE DRAIN SEAL AT EACH AC UNIT.

6 DRAIN PAN WATER SEAL PIPING DRAW - THRU UNIT
SCALENTS

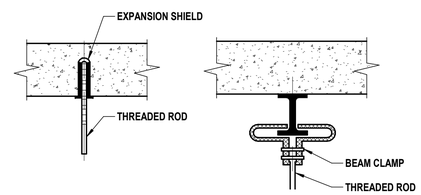

7 PIPE HANGER SUPPORT DETAIL
SCALENTS

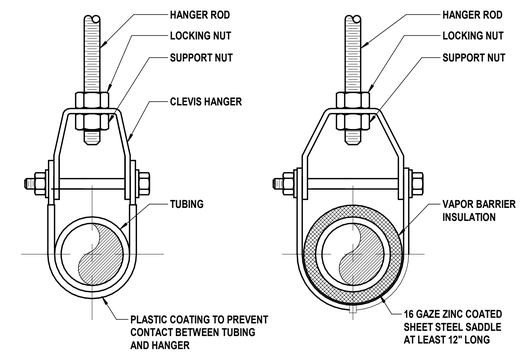

8 COPPER TUBING HANGER DETAILS
SCALENTS

H2M architects + engineers

538 Broad Hollow Road, 4th Floor East
Melville, NY 11747
631.756.8000 • www.h2m.com
NY Architecture & Landscape Architecture: No Certificate Required
NY Engineering Certificate of Authorization No.: 0018178

CONSULTANTS:

MARK	DATE	DESCRIPTION

STATE OF NEW YORK · JOHN M. LAHEY · 101303 · LICENSED PROFESSIONAL ENGINEER

JOHN M. LAHEY, P.E.
NY PROFESSIONAL ENGINEER Lic. No: 101303

Exp. Date

"IN ACCORDANCE WITH ARTICLE 145, SECTION 7209 OF THE NYS EDUCATION LAW, ALTERATION OF THIS DOCUMENT EXCEPT BY A LICENSED PROFESSIONAL IS ILLEGAL"

DESIGNED BY:	DRAWN BY:	CHECKED BY:	REVIEWED BY:
Designer	Author	Checker	Approver
PROJECT No: TRFD 2302	DATE: FEBRUARY 2025	SCALE: AS SHOWN	

CLIENT

THIELLS ROSEVILLE FIRE DISTRICT

NEW 26-100 FIRE HEADQUARTERS

THIELLS 26 FD

65 W RAMAPO ROAD
GARNERVILLE, NY 10923

CONTRACT

CONTRACT M
HVAC CONSTRUCTION

STATUS

FINAL BID DOCUMENT

SHEET TITLE

HVAC
DETAILS (2 OF 2)

DRAWING No.

M 501.00

C:\Users\kmcdonald\Documents\TRFD2302_Central23-M_kmcdonaldDTNVD.rvt

2/25/2025 1:22:07 PM

PACKAGED ROOFTOP UNITS (RTU)

EQUIPMENT NO.	LOCATION	AREA SERVED	PERFORMANCE/CONSTRUCTION REQUIREMENTS																	BASIS OF DESIGN INFORMATION							MECHANICAL NOTES	ELECTRICAL NOTES
			SUPPLY FAN				HEATING PERFORMANCE						COOLING PERFORMANCE											ELECTRICAL DATA				
			TOTAL AIR FLOW (CFM)	ESP (IN. W.G.)	BHP	MIN. OA (CFM)	MAX. OUTPUT HEATING CAPACITY (MBH)	AIR DATA		HEATING MEDIUM GAS			TOTAL CAPACITY (NOM. TONS)	COOLING CAPACITY (MBH)	SENSIBLE CAPACITY (MBH)	REFRIG. TYPE	EER/IEER	AIR DATA			MNF	MODEL NO.	NOMINAL DIMENSIONS L x W x H (IN.)	NOMINAL OPERATING WEIGHT (LBS.)	VOLTS /PHASE	MCA (A)	MOCP (A)		
								ENT. TEMP. (°F DB)	LVG. TEMP. (°F DB)	MAX. INPUT (MBH)	MIN./MAX/ INLET PRESS. (IN. W.G.)	EFFICIENCY (%)						ENT. TEMP. (°F DB/WB)	LVG. TEMP. (°F DB/WB)	REHEAT LVG. (°F DB/WB)								
RTU-A	HIGH ROOF -	MEETING ROOM A	2400	1.00	1.74	745	123	64	100	150.0	5.00/13.00	82.00	6.0	74	57.26	R-454B	0/0	79/67	57/57	75/62	CARRIER	48GEFN07J5M5-3W2T0	88 x 48 x 36	1202	208/3	43.00	50	1-20	2,4,7,9,12
RTU-B	HIGH ROOF -	MEETING ROOM B	5000	1.00	2.77	1675	194	60	87	240.0	5.00/13.00	81.00	12.5	155	116	R-454B	0/0	80/67	59/58	75/63	CARRIER	48GEFN14J6M5-3W2T0	108 x 60 x 48	1995	208/3	73.00	80	1-20	2,4,7,9,12

MECHANICAL NOTES:
1. 2" PLEATED MERV-13 FILTERS WITH FOUR (4) SETS OF SPARE MEDIA
2. LOUVERED HAIL GUARDS
3. BACKNET COMPATABLE CONTROLS
4. POWERED CONVIENCE OUTLET
5. 14" SEISMIC RATED ROOF CURB AND THRU THE BASE CONNECTIONS
6. POWERED EXHAUST
7. PHASE LOSS MONITORING
8. HINGED ACCESS PANELS
9. PROVIDE COMBINATION PROGRAMABLE HUMIDISTAT AND THERMOSTAT
10. INTERNAL FILTER RACK
11. PROVIDE MANUFACTURER DISCONNECT
12. STAINLESS STEEL HEAT EXCHANGER
13. HOT GAS REHEAT
14. ULTRA LOW LEAK ENTHALPY ECONOMIZER
15. 2 STAGE GAS HEATING
16. MANUFACTURER PROVIDED CARRIEIR CONNECT WIFI 7- DAY PROGRAMABLE CONTROLLER
17. VERTICAL SUPPLY AND RETURN
18. PROVIDE INTERNAL VIBRATION ISOLATION FOR ALL FANS AND COMPRESSORS.
19. SINGLE ZONE VAV
20. DEMAND CONTROL VENTILATION

ELECTRICAL NOTES:
1. INTEGRAL DISCONNECT SWITCH [FIELD WIRED]
2. INTEGRAL DISCONNECT SWITCH [FACTORY WIRED]
3. INTEGRAL UNPOWERED RECEPTACLES [FIELD WIRED]
4. INTEGRAL POWERED RECEPTACLES [FACTORY WIRED]
5. INTEGRAL CONDENSATE PUMP [UNPOWERED]
6. INTEGRAL CONDENSATE PUMP [POWERED]
7. LOW VOLTAGE CONTROLS
8. LINE VOLTAGE CONTROLS
9. INTEGRAL STARTERS
10. MOTORIZED DAMPERS [24VAC]
11. MOTORIZED DAMPERS [120VAC]
12. SINGLE POINT POWER FEED
13. INDOOR UNIT POWERED FROM OUTDOOR UNIT
14. ELECTRICAL CONTRACTOR TO PROVIDE DISCONNECT SWITCH
15. ON SAME POWER FEED AS ASSOCIATED INDOOR UNIT

DEDICATED OUTDOOR AIR SYSTEM (DOAS)

EQUIPMENT NO.	LOCATION	AREA SERVED	PERFORMANCE/CONSTRUCTION REQUIREMENTS																			BASIS OF DESIGN INFORMATION						MECHANICAL NOTES	ELECTRICAL NOTES
			SUPPLY FAN			RETURN/EXHAUST FAN			HEATING PERFORMANCE					COOLING PERFORMANCE											ELECTRICAL DATA				
			TOTAL AIR FLOW (CFM)	ESP (IN. W.G.)	BHP	TOTAL AIR FLOW (CFM)	ESP (IN. W.G.)	BHP	MAX. OUTPUT HEATING CAPACITY (MBH)	AIR DATA		HEATING MEDIUM GAS		TOTAL CAPACITY (NOM. TONS)	COOLING CAPACITY (MBH)	SENSIBLE CAPACITY (MBH)	REFRIG. TYPE	AIR DATA			MNF	MODEL NO.	NOMINAL DIMENSIONS L x W x H (IN.)	NOMINAL OPERATING WEIGHT (LBS.)	VOLTS /PHASE	MCA (A)	MOCP (A)		
										ENT. TEMP. (°F DB)	LVG. TEMP. (°F DB)	MIN./MAX/ INLET PRESS. (IN. W.G.)	EFFICIENCY (%)					ENT. TEMP. (°F DB/WB)	LVG. TEMP. (°F DB/WB)	REHEAT LVG. (°F DB/WB)									
DOAS-1	HIGH ROOF	ROOF	1500	1.00	0.89	980	0.75	0.34	100	43	93	5.00/13.00	81.00	5.0	74	49	R-410A	82/69	52/52	75/61	CARRIER	62XJ05BBMTCAH2T2QT	102.0 x 66.0 x 54.0	2110.00	208/3	37.00	50	1-18	2,4,7,12

MECHANICAL NOTES:
1. 4" PLEATED MERV-13 FILTERS WITH FOUR (4) SETS OF SPARE MEDIA
2. BACNET COMPATIBLE CONTROLS
3. POWERED CONVENIENCE OUTLET
4. 14" SEISMIC RATED ROOF CURB AND THRU THE BASE CONNECTIONS
5. POWERED EXHAUST
6. PHASE LOSS MONITORING
7. HINGED ACCESS PANELS
8. ENERGY RECOVERY WHEEL WITH BYPASS AND DEFROST
9. VARIABLE SPEED CONDENSER FANS
10. 6 ROW EVAPORATOR COIL
11. MODULATING HOT GAS REHEAT
12. EC MOTOR EXHAUST FAN
13. PROVIDE MANUFACTURER DISCONNECT
14. 5:1 MODULATING GAS HEAT
15. STAINLESS STEEL HEAT EXCHANGER
16. SUPPLY AND EXHAUST AIRFLOW MONITORING
17. PROVIDE CENTRAL CONTROLLER. DETERMINE LOCATION WITH OWNER IN FIELD WITH EMAIL/SMS CAPABILITIES.
18. PROVIDE INTERNAL VIBRATION ISOLATION FOR ALL FANS AND COMPRESSORS.

ELECTRICAL NOTES:
1. INTEGRAL DISCONNECT SWITCH [FIELD WIRED]
2. INTEGRAL DISCONNECT SWITCH [FACTORY WIRED]
3. INTEGRAL UNPOWERED RECEPTACLES [FIELD WIRED]
4. INTEGRAL POWERED RECEPTACLES [FACTORY WIRED]
5. INTEGRAL CONDENSATE PUMP [UNPOWERED]
6. INTEGRAL CONDENSATE PUMP [POWERED]
7. LOW VOLTAGE CONTROLS
8. LINE VOLTAGE CONTROLS
9. INTEGRAL STARTERS
10. MOTORIZED DAMPERS [24VAC]
11. MOTORIZED DAMPERS [120VAC]
12. SINGLE POINT POWER FEED
13. INDOOR UNIT POWERED FROM OUTDOOR UNIT
14. ELECTRICAL CONTRACTOR TO PROVIDE DISCONNECT SWITCH
15. ON SAME POWER FEED AS ASSOCIATED INDOOR UNIT

DUCTLESSS SPLIT EVAPORATOR UNITS

EQUIPMENT NO.	LOCATION	TYPE	PERFORMANCE/CONSTRUCTION REQUIREMENTS				BASIS OF DESIGN INFORMATION						MECHANICAL NOTES	ELECTRICAL NOTES
					HEAT PUMP PERFORMANCE						ELECTRICAL DATA			
			REFRIGERANT TYPE	AIRFLOW (CFM)	TOTAL HEATING CAPACITY (MBH)	TOTAL COOLING CAPACITY (MBH)	MNF	MODEL NO.	NOMINAL DIMENSIONS L x W x H (IN.)	NOMINAL OPERATING WEIGHT (LBS.)	VOLTS/PHASE	MCA (A)		
DSEU-1	RADIO ROOM - 119	CEILING HUNG CASSETTE	R-410A	420	18	16	TOSHIBA/CARRIER	MMU-AP0181MH2UL	24.0 x 24.0 x 132.0	45.00	208/1	0.20	1-6	7,14,15
DSEU-2	I.T. - M04	HIGH WALL SPLIT	R-410A	635	18	18	TOSHIBA/CARRIER	40MAHBQ12XA3	38.0 x 10.0 x 13.0	27.00	208/1	0.20	1-5	7,14,15
DSEU-3	FILE STORAGE - M03	HIGH WALL SPLIT	R-410A	382	11.8	9	TOSHIBA/CARRIER	40MAHBQ09XA3	31.0 x 9.0 x 12.0	23.00	208/1	0.31	1-5	7,14,15

MECHANICAL NOTES:
1. RELATIVE HUMIDITY SENSOR
2. MANUFACTURER PROVIDED WIRED, WALL MOUNTED PROGRAMABLE THERMOSTAT
3. INSTALL ALL EQUIPMENT AND COMPONENTS ACCORDING TO MANUFACTURERS INSTRUCTIONS
4. INTEGRAL CONDENSATE PUMP
5. REMOVABLE WASHABLE FILTERS
6. OUTSIDE AIR INTAKE

ELECTRICAL NOTES:
1. INTEGRAL DISCONNECT SWITCH [FIELD WIRED]
2. INTEGRAL DISCONNECT SWITCH [FACTORY WIRED]
3. INTEGRAL UNPOWERED RECEPTACLES [FIELD WIRED]
4. INTEGRAL POWERED RECEPTACLES [FACTORY WIRED]
5. INTEGRAL CONDENSATE PUMP [UNPOWERED]
6. INTEGRAL CONDENSATE PUMP [POWERED]
7. LOW VOLTAGE CONTROLS
8. LINE VOLTAGE CONTROLS
9. INTEGRAL STARTERS
10. MOTORIZED DAMPERS [24VAC]
11. MOTORIZED DAMPERS [120VAC]
12. SINGLE POINT POWER FEED
13. INDOOR UNIT POWERED FROM OUTDOOR UNIT
14. ELECTRICAL CONTRACTOR TO PROVIDE DISCONNECT SWITCH
15. ON SAME POWER FEED AS ASSOCIATED OUTDOOR UNIT

VRF BRANCH CONTROL BOXES

EQUIPMENT NO.	LOCATION	SYSTEM SERVED	NUMBER OF BRANCHES	BASIS OF DESIGN INFORMATION							MECHANICAL NOTES	ELECTRICAL NOTES
								ELECTRICAL DATA				
				MNF	MODEL NO.	NOMINAL DIMENSIONS L x W x H (IN.)	NOMINAL OPERATING WEIGHT (LBS.)	VOLTS /PHASE	MCA (A)	MOCP (A)		
BC-1	UNIFORM STORAGE - 108	SYSTEM SERVED	8	TOSHIBA/CARRIER	RBM-Y0611FU8PUL	25.5 x 16.0 x 11.6	77.00	208/1	0.75	15.00	1-2	7,14
BC-2	BANQUET STORAGE - 204	SYSTEM SERVED	8	TOSHIBA/CARRIER	RBM-Y0611FU8PUL	25.5 x 16.0 x 11.6	77.00	208/1	0.75	15.00	1-2	7,14

MECHANICAL NOTES:
1. PROVIDE BALL VALVES
2. PROVIDE 3/4" CONDENSATE DRAIN

ELECTRICAL NOTES:
1. INTEGRAL DISCONNECT SWITCH [FIELD WIRED]
2. INTEGRAL DISCONNECT SWITCH [FACTORY WIRED]
3. INTEGRAL UNPOWERED RECEPTACLES [FIELD WIRED]
4. INTEGRAL POWERED RECEPTACLES [FACTORY WIRED]
5. INTEGRAL CONDENSATE PUMP [UNPOWERED]
6. INTEGRAL CONDENSATE PUMP [POWERED]
7. LOW VOLTAGE CONTROLS
8. LINE VOLTAGE CONTROLS
9. INTEGRAL STARTERS
10. MOTORIZED DAMPERS [24VAC]
11. MOTORIZED DAMPERS [120VAC]
12. SINGLE POINT POWER FEED
13. INDOOR UNIT POWERED FROM OUTDOOR UNIT
14. ELECTRICAL CONTRACTOR TO PROVIDE DISCONNECT SWITCH
15. ON SAME POWER FEED AS ASSOCIATED OUTDOOR UNIT

VRF FAN COIL UNITS

EQUIPMENT NO.	LOCATION	PERFORMANCE/CONSTRUCTION REQUIREMENTS					BASIS OF DESIGN INFORMATION						MECHANICAL NOTES	ELECTRICAL NOTES
				HEAT PUMP PERFORMANCE							ELECTRICAL DATA			
		REFRIGERANT TYPE	AIRFLOW (CFM)	TOTAL HEATING CAPACITY (MBH)	TOTAL COOLING CAPACITY (MBH)	SENSIBLE COOLING CAPACITY (MBH)	MNF	MODEL NO.	NOMINAL DIMENSIONS L x W x H (IN.)	NOMINAL OPERATING WEIGHT (LBS.)	VOLTS/ PHASE	MCA (A)		
FCU-104	CONFERENCE ROOM - 104	R-410A	1130	22.1	24.8	19.3	TOSHIBA/CARRIER	MMD-UP0301BHP-UL	55.0 x 30.0 x 11.0	93.00	208/1	2.31	1-4	7,14
FCU-105	FITNESS ROOM - 105	R-410A	1177	39.1	45.7	34.6	TOSHIBA/CARRIER	MMD-UP0541BHP-UL	55.0 x 30.0 x 11.0	93.00	208/1	3.56	1-4	7,14
FCU-107	DAY ROOM - 107	R-410A	1177	35.2	39.7	30.8	TOSHIBA/CARRIER	MMD-UP0481BHP-UL	55.0 x 30.0 x 11.0	93.00	208/1	3.56	1-4	7,14
FCU-202	COMMISSIONERS - 202	R-410A	1130	26	29.8	23.1	TOSHIBA/CARRIER	MMD-UP00361BHP-UL	55.0 x 30.0 x 11.0	0.00	208/1	3.39	1-4	7,14

MECHANICAL NOTES:
1. MANUFACTURER PROVIDED WIRED, WALL MOUNTED PROGRAMABLE THERMOSTAT
2. FILTER RAIL KIT WITH MERV 13 FILTER
3. PROVIDE DRAIN PAN SENSOR. UNIT SHALL SHUT OFF IF HIGH WATER IS SENSED
4. INTERLOCK WITH ASSOCIATED ELECTRIC BASE BOARD HEATER

ELECTRICAL NOTES:
1. INTEGRAL DISCONNECT SWITCH [FIELD WIRED]
2. INTEGRAL DISCONNECT SWITCH [FACTORY WIRED]
3. INTEGRAL UNPOWERED RECEPTACLES [FIELD WIRED]
4. INTEGRAL POWERED RECEPTACLES [FACTORY WIRED]
5. INTEGRAL CONDENSATE PUMP [UNPOWERED]
6. INTEGRAL CONDENSATE PUMP [POWERED]
7. LOW VOLTAGE CONTROLS
8. LINE VOLTAGE CONTROLS
9. INTEGRAL STARTERS
10. MOTORIZED DAMPERS [24VAC]
11. MOTORIZED DAMPERS [120VAC]
12. SINGLE POINT POWER FEED
13. INDOOR UNIT POWERED FROM OUTDOOR UNIT
14. ELECTRICAL CONTRACTOR TO PROVIDE DISCONNECT SWITCH
15. ON SAME POWER FEED AS ASSOCIATED INDOOR UNIT

VRF AIR-COOLED CONDENSING UNITS

EQUIPMENT NO.	LOCATION	PERFORMANCE/CONSTRUCTION REQUIREMENTS						BASIS OF DESIGN INFORMATION								MECHANICAL NOTES	ELECTRICAL NOTES
						OUTDOOR AIR TEMP						ELECTRICAL DATA					
		REFRIG. TYPE	NOMINAL TONS	CORRECTED HEATING CAPACITY	CORRECTED COOLING CAPACITY (MBH)	COOLING RANGE (°F DB)	HEATING RANGE (°F DB)	MNF	MODEL NO.	NOMINAL DIMENSIONS L x W x H (IN.)	NOMINAL OPERATING WEIGHT (LBS.)	VOLTS /PHASE	MCA (A)	MOCP (A)			
CU-1A	HIGH ROOF -	R-410A	14.0	0.0	0.0	-10 ~ 125	-22 ~ 60	TOSHIBA/CARRIER	MMY-MAP1686FT9PUL	52.0 x 31.0 x 67.0	783.00	208/3	57.4	80	1-8	7,14
CU-1B	HIGH ROOF -	R-410A	14.0	0.0	0.0	-10 ~ 125	-22 ~ 60	TOSHIBA/CARRIER	MMY-MAP1686FT9PUL	52.0 x 31.0 x 67.0	783.00	208/3	57.4	80	1-8	7,14
CU-1C	HIGH ROOF -	R-410A	8.0	0.0	0.0	-10 ~ 125	-22 ~ 60	TOSHIBA/CARRIER	MMY-MAP0966FT9PUL	40.0 x 31.0 x 67.0	532.00	208/3	36.6	45	1-8	7,14

MECHANICAL NOTES:
1. INVERTER DRIVEN ROTARY COMPRESSORS
2. HIGH AND LOW PRESSURE SENSOR AND SWITCH
3. INVERTER OVERLOAD PROTECTION
4. PROCESS CONTROLLER BOARD FUSE
5. PROVIDE 18" HIGH RAILS
6. MANUFACTURER HAIL GUARD KIT
7. REFRIGERANT CHARGE BASED ON RECHARGE FROM CONDENSERS. CONTRACTOR TO NOTIFY ENGINEERS IF ADDITIONAL SYSTEM CHARGE IS REQUIRED
8. INTEGRATE WITH TOSHIBA/CARRIER CENTRAL CONTROL DEVICE. COORDINATE FINAL LOCATION WITH OWNER IN FIELD.

ELECTRICAL NOTES:
1. INTEGRAL DISCONNECT SWITCH [FIELD WIRED]
2. INTEGRAL DISCONNECT SWITCH [FACTORY WIRED]
3. INTEGRAL UNPOWERED RECEPTACLES [FIELD WIRED]
4. INTEGRAL POWERED RECEPTACLES [FACTORY WIRED]
5. INTEGRAL CONDENSATE PUMP [UNPOWERED]
6. INTEGRAL CONDENSATE PUMP [POWERED]
7. LOW VOLTAGE CONTROLS
8. LINE VOLTAGE CONTROLS
9. INTEGRAL STARTERS
10. MOTORIZED DAMPERS [24VAC]
11. MOTORIZED DAMPERS [120VAC]
12. SINGLE POINT POWER FEED
13. INDOOR UNIT POWERED FROM OUTDOOR UNIT
14. ELECTRICAL CONTRACTOR TO PROVIDE DISCONNECT SWITCH
15. ON SAME POWER FEED AS ASSOCIATED INDOOR UNIT

COMPACT MAKE UP AIR UNIT

EQUIPMENT NO.	LOCATION	PERFORMANCE/CONSTRUCTION REQUIREMENTS		BASIS OF DESIGN INFORMATION						MECHANICAL NOTES	ELECTRICAL NOTES
								ELECTRICAL DATA			
		AIRFLOW (CFM)	ELEC. HEAT PERFORMANCE TOTAL HEATING CAPACITY (MBH)	MNF	MODEL NO.	NOMINAL DIMENSIONS L x W x H (IN.)	NOMINAL OPERATING WEIGHT (LBS.)	VOLTS/ PHASE	MCA (A)		
CMAU-1	RADIO ROOM - 119	50	3.412	NEPTRONIC	CMU06B010DD	34.2 x 0.0 x 9.9	40.00	208/1	10.00	1-4	2,7

MECHANICAL NOTES:
1. 1 KILOWATT HEATER ELEMENT
2. EC MOTOR CENTRIFUGAL FAN
3. PROVIDE DUCT TEMPERATURE SENSORS
4. INTERLOCK WITH LIGHT SWITCH

ELECTRICAL NOTES:
1. INTEGRAL DISCONNECT SWITCH [FIELD WIRED]
2. INTEGRAL DISCONNECT SWITCH [FACTORY WIRED]
3. INTEGRAL UNPOWERED RECEPTACLES [FIELD WIRED]
4. INTEGRAL POWERED RECEPTACLES [FACTORY WIRED]
5. INTEGRAL CONDENSATE PUMP [UNPOWERED]
6. INTEGRAL CONDENSATE PUMP [POWERED]
7. LOW VOLTAGE CONTROLS
8. LINE VOLTAGE CONTROLS
9. INTEGRAL STARTERS
10. MOTORIZED DAMPERS [24VAC]
11. MOTORIZED DAMPERS [120VAC]
12. SINGLE POINT POWER FEED
13. INDOOR UNIT POWERED FROM OUTDOOR UNIT
14. ELECTRICAL CONTRACTOR TO PROVIDE DISCONNECT SWITCH
15. ON SAME POWER FEED AS ASSOCIATED INDOOR UNIT

H2M architects + engineers

538 Broad Hollow Road, 4th Floor East
Melville, NY 11747
631.756.8000 • www.h2m.com
NY Architecture & Landscape Architecture: No Certificate Required
NY Engineering Certificate of Authorization No.: 0018178

CONSULTANTS:

MARK	DATE	DESCRIPTION

STATE OF NEW YORK · JOHN M. LAHEY · 101303 · LICENSED PROFESSIONAL ENGINEER

JOHN M. LAHEY, P.E.
Exp. Date
NY PROFESSIONAL ENGINEER Lic. No. 101303

"IN ACCORDANCE WITH ARTICLE 145, SECTION 7209 OF THE NYS EDUCATION LAW, ALTERATION OF THIS DOCUMENT EXCEPT BY A LICENSED PROFESSIONAL IS ILLEGAL"

DESIGNED BY:	DRAWN BY:	CHECKED BY:	REVIEWED BY:
JML	BFB	JML	JML

PROJECT No:	DATE:	SCALE:
TRFD 2302	FEBRUARY 2025	AS SHOWN

CLIENT

THIELLS ROSEVILLE FIRE DISTRICT

NEW 26-100 FIRE HEADQUARTERS

THIELLS 26 FD

65 W RAMAPO ROAD GARNERVILLE, NY 10923

CONTRACT

CONTRACT M HVAC CONSTRUCTION

STATUS

FINAL BID DOCUMENT

SHEET TITLE

HVAC SCHEDULES

DRAWING No.

M 600.00

C:\Users\kmcdonald\Documents\TRFD2302_Central23-M_kmcdonaldDTNVD.rvt
2/25/2025 1:22:07 PM

FANS

EQUIPMENT NO.	LOCATION	AREA SERVED	SERVICE	TYPE	PERFORMANCE/CONSTRUCTION REQUIREMENTS						BASIS OF DESIGN INFORMATION							MECHANCIAL NOTES	ELECTRICAL NOTES
					AIRFLOW (CFM)	ESP (IN. W.G)	FAN RPM	BHP	DRIVE TYPE	INLET SOUND dBA (SONES)	MNF	MODEL NO.	NOMINAL DIMENSIONS L x W x H (IN.)	NOMINAL OPERATING WEIGHT (LBS.)	ELECTRICAL DATA				
															VOLTS/PHASE	MOTOR HP	MOTOR RPM		
GXF-1	LOW ROOF -	APPERATUS BAY	GENERAL EXHAUST	DOWN BLAST	400	0.30	1130	0.05	DIRECT	48	GREENHECK	G-095-VG	22.0 x 22.0 x 33.0	84.0	115/1	1/6	1725	1-4	2,8,11
GXF-2	LOW ROOF -	APPERATUS BAY	GDS EXHAUST	DOWN BLAST	6000	0.50	773	1.26	DIRECT	65	GREENHECK	G-240-VG	43.0 x 43.0 x 44.0	271.0	208/1	2	870	1-5	2,8,11
GXF-3	HIGH ROOF -	FITNESS ROOM	FITNESS EXHAUST	DOWN BLAST	350	0.50	1310	0.07	DIRECT	49	GREENHECK	G-100-VG	24.0 x 24.0 x 24.0	99.0	115/1	1/4	1725	1-4,6	2,8,11
GXF-4	HIGH ROOF -	1ST FLR BATH	GENERAL EXHAUST	DOWN BLAST	375	0.25	1041	0.07	DIRECT	48	GREENHECK	G-100-VG	24.0 x 24.0 x 24.0	99.0	115/1	1/4	1725	1-4,6	2,8,11
GXF-5	HIGH ROOF -	2ND FLR BATH	GENERAL EXHAUST	DOWN BLAST	375	0.25	1041	0.07	DIRECT	48	GREENHECK	G-100-VG	24.0 x 24.0 x 24.0	99.0	115/1	1/4	1725	1-4,6	2,8,11
GXF-6	HIGH ROOF -	KITCHEN	GENERAL KITCHEN EXHAUST	UPBLAST	390	0.30	1643	0.06	DIRECT	56	GREENHECK	CUE-080-VG	22.0 x 22.0 x 13.0	69.0	115/1	1/10	1725	1-4,6	2,8,11
GXF-7	DECON BATHROOM - 113	DECON BATH	GENERAL EXHAUST	CEILING MOUNT	100	0.50	900	0	DIRECT	(3.5)	GREENHECK	SP-A200	14.0 x 15.0 x 11.0	28.0	115/1	50 WATT	0	1,2,7,8,13	2,8
GXF-8	LOW ROOF -	LAUNDRY	GENERAL EXHAUST	DOWN BLAST	100	0.50	1236	0.05	DIRECT	50	GREENHECK	G-097-VG	24.0 x 24.0 x 24.0	99.0	115/1	1/4	1725	1-4,10,13	2,8,11
GXF-9	LOW ROOF -	LOCKER ROOM	GENERAL EXHAUST	DOWN BLAST	400	0.30	1130	0.05	DIRECT	48	GREENHECK	G-098-VG	22.0 x 22.0 x 33.0	84.0	115/1	1/6	1725	1-4,6	2,8,11
GXF-10	HIGH ROOF -	WORK ROOM	GENERAL EXHAUST	DOWN BLAST	150	0.50	1236	0.05	DIRECT	50	GREENHECK	G-097-VG	24.0 x 24.0 x 24.0	99.0	115/1	1/4	1725	1-4,10,13,14	2,8,11
GXF-11	LOW ROOF -	UTILITY ROOM	GENERAL EXHAUST	DOWN BLAST	150	0.50	1236	0.05	DIRECT	50	GREENHECK	G-097-VG	24.0 x 24.0 x 24.0	99.0	115/1	1/4	1725	1-4,10,13,14	2,8,11
GXF-12	UTILITY ROOM - 110	UTILITY ROOM	ELECTRICAL GEAR EXHAUST	INLINE	1850	0.25	687	0.12	DIRECT	46	GREENHECK	SQ-160-VG	26.0 x 26.0 x 26.0	177.0	115/1	3/4	1725	1-4,11	2,8,11
GXF-13	HIGH ROOF -	ELEVATOR	GENERAL EXHAUST	DOWN BLAST	700	0.25	1041	0.07	DIRECT	48	GREENHECK	G-100-VG	24.0 x 24.0 x 24.0	99.0	115/1	1/4	1725	1-4,11	2,8,11
GXF-14	UTILITY ROOM - 110	DECON TRANSITION	GENERAL EXHAUST	INLINE	150	0.50	1395	0.09	DIRECT	58	GREENHECK	SQ-97-VG	21.0 x 15.0 x 15.0	51.0	115/1	1/4	1725	1,2,4,6	2,8,11
GXF-15	LOW ROOF -	SCBA	SCBA EXHAUST	DOWN BLAST	3200	0.50	1265	0.8	DIRECT	65	GREENHECK	G-160-VG	28.4 x 28.4 x 24.0	115.0	208/1	2	1725	1-4	2,8,11
GXF-16	OUTDOOR STORAGE - 114	OUTDOOR STORAGE	GENERAL EXHAUST	INLINE	1300	0.23	2200	0.54	DIRECT	60	GREENHECK	SQ-98-VG	23.0 x 15.0 x 15.0	81.0	208/1	3/4	2200	1-4,12	2,8

MECHANICAL NOTES:
1. MANUFACTURER PROVIDED DISCONNECT SWITCH
2. PROVIDE DIAL FOR BALANCING
3. MANUFACTURER PROVIDED DAMPER AND 120v DAMPER
4. MANUFACTURER PROVIDED HOA CONTROLLER
5. FAN TO OPERATE BASED ON GAS DETECTION SIGNAL
6. CONTRACT E TO PROVIDE LINE VOLTAGE TIME CLOCK
7. PROVIDE 4" WALL CAP
8. INTERLOCK WITH LIGHT SWITCH
9. PROVIDE LOW VOLTAGE THERMOSTAT
10. INTERLOCK WITH ASSOCIATED ELECTRIC HEATER
11. CONTRACT E TO PROVIDE LINE VOLTAGE THERMOSTAT
12. MANUFACTURER PROVIDED IAQ CONTROLLER.
13. MANUFACTURER PROVIDED GRAVITY DAMPER.
14. INTERLOCK WITH FAN CONTROLLER ON WALL.

ELECTRICAL NOTES:
1. INTEGRAL DISCONNECT SWITCH [FIELD WIRED]
2. INTEGRAL DISCONNECT SWITCH [FACTORY WIRED]
3. INTEGRAL UNPOWERED RECEPTACLES [FIELD WIRED]
4. INTEGRAL POWERED RECEPTACLES [FACTORY WIRED]
5. INTEGRAL CONDENSATE PUMP [UNPOWERED]
6. INTEGRAL CONDENSATE PUMP [POWERED]
7. LOW VOLTAGE CONTROLS
8. LINE VOLTAGE CONTROLS
9. INTEGRAL STARTERS
10. MOTORIZED DAMPERS [24VAC]
11. MOTORIZED DAMPERS [120VAC]
12. SINGLE POINT POWER FEED
13. INDOOR UNIT POWERED FROM OUTDOOR UNIT
14. ELECTRICAL CONTRACTOR TO PROVIDE DISCONNECT SWITCH
15. ON SAME POWER FEED AS ASSOCIATED INDOOR UNIT

LOUVERS

EQUIPMENT NO.	LOCATION	SERVICE	PERFORMANCE/CONSTRUCTION REQUIREMENTS				BASIS OF DESIGN INFORMATION				REMARKS
			AIR FLOW (CFM)	MAX P.D. (IN. W.C.)	MIN. FREE AREA REQUIRED (SQ. FT.)	MAX VELOCITY (FPM)	MNF	MODEL NO.	NOMINAL DIMENSIONS W x H (IN.)	NOMINAL OPERATING WEIGHT (LBS.)	
LV-1	APPARATUS BAY - 120	GDS INTAKE	3200	0.04	6.55	488	GREENHECK	ESD-435	35 x 47	83	1-3
LV-2	APPARATUS BAY - 120	GDS INTAKE	3200	0.04	6.55	488	GREENHECK	ESD-435	35 x 47	83	1-3
LV-4	DAY ROOM - 107	EXHAUST	1950	0.04	5.83	488	GREENHECK	ESD-435	72 x 16	83	1-3
LV-5	LAUNDRY - 115	INTAKE	3300	0.04	1.33	488	GREENHECK	ESD-435	76 x 14	83	1-3
LV-3	APPARATUS BAY - 120	GDS INTAKE	3200	0.04	6.55	488	GREENHECK	ESD-435	35 x 47	83	1-3
LV-6	UTILITY ROOM - 110	INTAKE	1850	0.04	5.83	488	GREENHECK	ESD-435	49 x 16	83	1-3
LV-7											
LV-11											

MECHANICAL NOTES:
1. PROVIDE WITH STANDARD WALL SLEEVE
2. PROVIDE BIRD SCREEN.
3. COORDINATE COLOR AND FINISH WITH ARCHITECT

MOTORIZED DAMPERS

EQUIPMENT NO.#	PERFORMANCE/CONSTRUCTION REQUIREMENTS				BASIS OF DESIGN INFORMATION			MECHANICAL NOTES	ELECTRICAL NOTES
	AIR FLOW (CFM)	FACE VELOCITY (FPM)	FRAME THICKNESS	FAILURE MODE	MNF/ACTUATOR MNF	MODEL NO./ACTUATOR MODEL NO.	ELECTRICAL DATA POWER (W)		
MD-1	3200	267	16	FAIL CLOSED	GREENHECK / SIEMENS	VCD-23 / GVD221.1U	10	1-3	8,11
MD-2	3200	267	16	FAIL CLOSED	GREENHECK / SIEMENS	VCD-23 / GVD221.1U	10	1-3	8,11
MD-3	3200	267	16	FAIL CLOSED	GREENHECK / SIEMENS	VCD-23 / GVD221.1U	10	1-3	8,11
MD-4	400	267	16	FAIL CLOSED	GREENHECK / SIEMENS	VCD-23 / GVD221.1U	10	1,2	8,11
MD-5	3200	267	16	FAIL CLOSED	GREENHECK / SIEMENS	VCD-23 / GVD221.1U	10	1,2	8,11
MD-6	100	267	16	FAIL CLOSED	GREENHECK / SIEMENS	VCD-23 / GVD221.1U	10	1,2	8,11
MD-7	3200	267	16	FAIL CLOSED	GREENHECK / SIEMENS	VCD-23 / GVD221.1U	10	1,2	8,11
MD-8	1850	267	16	FAIL CLOSED	GREENHECK / SIEMENS	VCD-23 / GVD221.1U	10	1,2	8,11
MD-9	375	267	16	FAIL CLOSED	GREENHECK / SIEMENS	VCD-23 / GVD221.1U	10	1,2	8,11
MD-10	3200	267	16	FAIL CLOSED	GREENHECK / SIEMENS	VCD-23 / GVD221.1U	10	1,2	8,11
MD-11	6000	267	16	FAIL CLOSED	GREENHECK / SIEMENS	VCD-23 / GVD221.1U	10	1,2	8,11
MD-12	350	267	16	FAIL CLOSED	GREENHECK / SIEMENS	VCD-23 / GVD221.1U	10	1,2	8,11
MD-13	375	267	16	FAIL CLOSED	GREENHECK / SIEMENS	VCD-23 / GVD221.1U	10	1,2	8,11
MD-14	390	267	16	FAIL CLOSED	GREENHECK / SIEMENS	VCD-23 / GVD221.1U	10	1,2	8,11
MD-15	700	267	16	FAIL CLOSED	GREENHECK / SIEMENS	VCD-23 / GVD221.1U	10	1,2	8,11
MD-17	1850	267	16	FAIL CLOSED	GREENHECK / SIEMENS	VCD-23 / GVD221.1U	10		

MECHANICAL NOTES:
1. TWO POSITION W/ SPRING RETURN
2. PROVIDE WITH STANDARD SLEEVE
3. INTERLOCK WITH GXF-2

ELECTRICAL NOTES:
1. INTEGRAL DISCONNECT SWITCH [FIELD WIRED]
2. INTEGRAL DISCONNECT SWITCH [FACTORY WIRED]
3. INTEGRAL UNPOWERED RECEPTACLES [FIELD WIRED]
4. INTEGRAL POWERED RECEPTACLES [FACTORY WIRED]
5. INTEGRAL CONDENSATE PUMP [UNPOWERED]
6. INTEGRAL CONDENSATE PUMP [POWERED]
7. LOW VOLTAGE CONTROLS
8. LINE VOLTAGE CONTROLS
9. INTEGRAL STARTERS
10. MOTORIZED DAMPERS [24VAC]
11. MOTORIZED DAMPERS [120VAC]
12. SINGLE POINT POWER FEED
13. INDOOR UNIT POWERED FROM OUTDOOR UNIT
14. ELECTRICAL CONTRACTOR TO PROVIDE DISCONNECT SWITCH
15. ON SAME POWER FEED AS ASSOCIATED INDOOR UNIT

HIGH VOLUME, LOW SPEED FANS

EQUIPMENT NO.	AREA SERVED	BASIS OF DESIGN INFORMATION				WEIGHT (lb)	MCA (Current)	MECHANCIAL NOTES	ELECTRICAL NOTES
		MNF	MODEL NO.	NOMINAL DIMENSIONS DIA x H (IN.)	ELECTRICAL DATA VOLTS/PHASE				
HVLS-1	APPARATUS BAY	BIG ASS FANS	ESSENCE SERIES	120 x 31	120/1	81	10 A	1-4	14
HVLS-2	APPARATUS BAY	BIG ASS FANS	ESSENCE SERIES	120 x 31	120/1	81	10 A	1-4	14
HVLS-3	APPARATUS BAY	BIG ASS FANS	ESSENCE SERIES	120 x 31	120/1	81	10 A	1-4	14

MECHANICAL NOTES:
1. PROVIDE 'ESSENCE, PIVOT' CONTROLLER W/ 120V PLUG TYPE CONNECTION
2. PROVIDE SUPPLEMENTAL STEEL AS REQUIRED
3. PROVIDE CONTROL WIRING FOR FAN AND CONTROLLER
4. PROVIDE FIRE RELAY WIRING. INTERLOCK WITH FIRE ALARM PANEL

ELECTRICAL NOTES:
1. INTEGRAL DISCONNECT SWITCH [FIELD WIRED]
2. INTEGRAL DISCONNECT SWITCH [FACTORY WIRED]
3. INTEGRAL UNPOWERED RECEPTACLES [FIELD WIRED]
4. INTEGRAL POWERED RECEPTACLES [FACTORY WIRED]
5. INTEGRAL CONDENSATE PUMP [UNPOWERED]
6. INTEGRAL CONDENSATE PUMP [POWERED]
7. LOW VOLTAGE CONTROLS
8. LINE VOLTAGE CONTROLS
9. INTEGRAL STARTERS
10. MOTORIZED DAMPERS [24VAC]
11. MOTORIZED DAMPERS [120VAC]
12. SINGLE POINT POWER FEED
13. INDOOR UNIT POWERED FROM OUTDOOR UNIT
14. ELECTRICAL CONTRACTOR TO PROVIDE DISCONNECT SWITCH
15. ON SAME POWER FEED AS ASSOCIATED INDOOR UNIT

VIBRATION ISOLATION / SEISMIC & WIND RESTRAINTS SCHEDULE

UNIT TAG	EQUIPMENT TYPE	LOCATION	MOUNTING METHOD	BASE TYPE	MNF	ISOLATOR TYPE	NOMINAL DEFLECTION (IN.)	RESTRAINT REQUIRED	SEISMIC COMPONENT IMPORTANCE FACTOR (Ip)	REMARKS
RTU-A,B / DOAS-1	PACKAGED ROOF TOP UNIT	ROOF	ROOF CURB	RC	VIBRO-ACOUSTICS	VCR	2	SEIS/WIND	1.5	1,2
CU-1A,B,C	VRF CONDESING UNIT	ROOF	ROOF RAIL	-	VIBRO-ACOUSTICS	NP	0.18	SEIS/WIND	1.5	1,2
DSCU-1,2,3	SPLIT CONDENSING UNIT	ROOF	ROOF RAIL	-	VIBRO-ACOUSTICS	NP	0.18	SEIS/WIND	1.5	1,2
GXF-1-6,13,16,17	ROOF MOUNTED EXHAUST FANS	ROOF	ROOF CURB	RC	VIBRO-ACOUSTICS	-	-	SEIS/WIND	1.5	1,2
GXF-7-12,14,15	SUSPENDED EXHUAST FANS	VARIES	SUSPENDED	-	VIBRO-ACOUSTICS	SHR	2	SEIS	1.5	1,2,6,7
EU/FCU (TYP)	VRF TERMINAL UNIT	VARIES	SUSPENDED	-	VIBRO-ACOUSTICS	-	-	SEIS	1.5	1,2,4,5
EUH/GUH (TYP)	UNIT HEATER	VARIES	SUSPENDED	-	VIBRO-ACOUSTICS	SHR	2	SEIS	1.5	1,2,6
HVLS-1,2,3	HIGH VOLUME LOW SPEED FAN	APP BAY	SUSPENDED	-	VIBRO-ACOUSTICS	-	-	SEIS	1.5	1,2,6
MAU-1	MAKE UP AIR UNIT	ROOF	ROOF CURB	RC	VIBRO-ACOUSTICS	VCR	2	SEIS/WIND	1.5	1,2
DUCTWORK (>6" CLEAR AREA)	DUCTWORK	VARIES	SUSPENDED	-	VIBRO-ACOUSTICS	-	-	SEIS	1.5	1,2
HVAC PIPING (>2" NOMINAL DIAMETER)	PIPING	VARIES	SUSPENDED	-	VIBRO-ACOUSTICS	-	-	SEIS	1.5	1,2

NOTES:
1. BASIS OF DESIGN: VIRBO-ACOUSTICS
2. SEISMICALLY RATED FOR PROJECT CONDITIONS
3. STAND SUPPORT MUST BE ABLE TO MEET CLACULATED SEISMIC LOADS
4. PROVIDE FLEXIBLE PIPING CONNECTORS
5. PROVIDE SHR OR SFS ISOLATORS ON ADJECENT PIPING/DUCTOWORK
6. PROVIDE SEISMIC RESTRAINT CABLES. PROVIDE ROD STIFFENERS AS REQUIRED
7. PROVIDE SEISMIC UPLIFT STOP WACHER
8. SUPPORT INLINE PUMP AT FLANGE CONNECTION

BASE TYPE
CIB - CONCRETE INERTIA BASE
VCR - ADJUSTABLE SPRING CURB
RC - ROOF CURB

ISOLATOR TPYE
NP- RUBBER PAD
SIPS - SEISMIC INLINE PUMP STANDS
SFS SEISMIC FLOOR MOUNT
SHR - SPRING + RUBBER HANGER

GAS DETECTION SYSTEM

EQUIPMENT NO.	LOCATION	SYSTEM INTERLOCK	MNF	MODEL NO.	NOMINAL DIMENSIONS L x W x H (IN.)	VOLTAG E/PHASE	MECHANICAL NOTES
GDS-1	APPARATUS BAY - 120	GDS (NO2)	RKI	BEACON 800	5.7 x 6.4 x 12.5	120/1	1-6
GDS-2	APPARATUS BAY - 120	GDS (CO)	RKI	BEACON 800	11.0 x 6.4 x 12.5	120/1	1-5,7
GDS-3	APPARATUS BAY - 120	GDS (CH4)	RKI	BEACON 800	11.1 x 6.0 x 12.5	120/1	1-5,8

MECHANICAL NOTES:
1. INCLUDE CONTROLLER IN NEMA 4X ENCLOSURE FOR WALL MOUNT
2. PROVIDE CONFIGURABLE ALARM OUTPUTS WITH ISOLATION RELAYS FOR INTERLOCK WITH FACP
3. PROVIDE PANEL MOUNTED AUDIBLE ALARM SCLIENCEING SWITCH
4. PROVIDE ALARM HORN WITH STROBE
5. PROVIDE STARTUP, TEST AND CALIBRATION
6. PROVIDE (8) NITROGEN DIOXIDE SENSORS 5' TO 6' AAF
7. PROVIDE (8) CARBON MONOXIDE 5' TO 6' AAF
8. PROVIDE (4) COMBUSTION GAS SENSOR 1' FROM CEILING

MAKE UP AIR UNIT (MAU)

EQUIPMENT NO.	LOCATION	AREA SERVED	PERFORMANCE/CONSTRUCTION REQUIREMENTS								PERFORMANCE/CONSTRUCTION REQUIREMENTS							BASIS OF DESIGN INFORMATION							MECHANICAL NOTES	ELECTRICAL NOTES
			SUPPLY FAN			HEATING PERFORMANCE				GAS HEATING EFFICIENCY (%)	COOLING PERFORMANCE							MNF	MODEL NO.	NOMINAL DIMENSIONS L x W x H (IN.)	NOMINAL OPERATING WEIGHT (LBS.)	ELECTRICAL DATA				
			TOTAL AIR FLOW (CFM)	ESP (IN. W.G.)	HP	MAX. OUTPUT HEATING CAPACITY (MBH)	AIR DATA ENT. TEMP. (°F DB)	AIR DATA LVG. TEMP. (°F DB)	HEATING MEDIUM GAS MIN./MAX/ INLET PRESS. (IN. W.G.)		TOTAL CAPACITY (NOM. TONS)	COOLING CAPACITY (MBH)	SENSIBLE CAPACITY (MBH)	REFRIG. TYPE	AIR DATA ENT. TEMP. (°F DB/WB)	AIR DATA LVG. TEMP. (°F DB/WB)	REHEAT LVG. (°F DB/WB)					VOLTS /PHASE	MCA (A)	MOCP (A)		
MAU-1	HIGH ROOF	KITCHEN	1400	0.50	1	106.757	43	106	7.00/14.00	80	6.0	83.9	50.6	R-410A	86/72	53/53	70/62	CaptiveAire	CAS-HVAC1-I.150-13-6T-DOAS	75.5 x 60.0 x 46.0	1431.00	208/3	30.70	35	1-27	2,4,7,9,12

MECHANICAL NOTES:
1. TOTAL CFM MONITORING
2. PROVIDE BACNET CARD
3. 14" SEISMIC RATED ROOF CURB AND THRU THE BASE CONNECTIONS
4. INTAKE FIRESTAT SET TO 135°F
5. DISCHARGE FIRESTAT SET TO 240°F
6. SINGLE POINT ELECTRICAL CONNECTION FOR RTU.
7. CASLINK BUILDING MONITORING SYSTEM - INTERNET OR CELLULAR CONNECTION REQUIRED
8. 2" MERV 13 FILTERS FOR RTU-1 (QTY. 4)
9. 2" MERV 8 FILTERS FOR RTU-1 (QTY. 4)
10. OVERHEAT STAT
11. RTU DOWN DISCHARGE
12. RTU FIXED 100% OA INTAKE CONTROL
13. RTU CURB DUCT HANGER
14. COMMERCIAL SMOLE DETECTOR/ALARM INTERLOCK - ALARM SUPPLIED BY OTHERS
15. OCCUPIED SCHEDULING
16. CLOGGED FILTER SWITCH - NOTIFICATION ON HMI
17. RTU CONVINENCE OUTLET (GFCI), 15 AMP - REQUIRES SEPERATE 120V CONNECTION.
18. 6 TON MODULATING COOLING OPTION, VARIABLE SPEED COMPRESSOR, ECM CONDENSING FANS
19. 6 TON MODULATING REHEAT OPTION - SPACE DEWPOINT CONTROL
20. 100% OUTSIDE AIR
21. VFD FACTORY MOUNTED ABD WIRED IN RTU COMMERCIAL CONTROL VESTIBULE
22. VAV PACKAGE W/ 0-10VDC INPUT CONTROL (571 VFD INCLUDED)
23. REMOTE TEMPERATURE AND HUMIDITY SPACE SENSOR
24. EXTERIOR GAS CONNECTION PROVIDED BY FACTORY WITH QUICK SEAL AND ABNTI-ROTATION BRACKET
25. PHASE LOSS MONITORING
26. HINGED ACCESS PANELS
27. ENERGY RECOVERY WHEEL WITH BYPASS AND DEFROST

ELECTRICAL NOTES:
1. INTEGRAL DISCONNECT SWITCH [FIELD WIRED]
2. INTEGRAL DISCONNECT SWITCH [FACTORY WIRED]
3. INTEGRAL UNPOWERED RECEPTACLES [FIELD WIRED]
4. INTEGRAL POWERED RECEPTACLES [FACTORY WIRED]
5. INTEGRAL CONDENSATE PUMP [UNPOWERED]
6. INTEGRAL CONDENSATE PUMP [POWERED]
7. LOW VOLTAGE CONTROLS
8. LINE VOLTAGE CONTROLS
9. INTEGRAL STARTERS
10. MOTORIZED DAMPERS [24VAC]
11. MOTORIZED DAMPERS [120VAC]
12. SINGLE POINT POWER FEED
13. INDOOR UNIT POWERED FROM OUTDOOR UNIT
14. ELECTRICAL CONTRACTOR TO PROVIDE DISCONNECT SWITCH
15. ON SAME POWER FEED AS ASSOCIATED INDOOR UNIT

H2M architects + engineers
538 Broad Hollow Road, 4th Floor East
Melville, NY 11747
631.756.8000 • www.h2m.com
NY Architecture & Landscape Architecture: No Certificate Required
NY Engineering Certificate of Authorization No.: 0018178

CONSULTANTS:

MARK	DATE	DESCRIPTION

STATE OF NEW YORK · JOHN LAHEY · 101303 · LICENSED PROFESSIONAL ENGINEER

JOHN M. LAHEY, P.E.
NY PROFESSIONAL ENGINEER Lic. No. 101303
Exp. Date

"IN ACCORDANCE WITH ARTICLE 145, SECTION 7209 OF THE NYS EDUCATION LAW, ALTERATION OF THIS DOCUMENT EXCEPT BY A LICENSED PROFESSIONAL IS ILLEGAL"

DESIGNED BY:	DRAWN BY:	CHECKED BY:	REVIEWED BY:
Designer	Author	Checker	Approver

PROJECT No:	DATE:	SCALE:
TRFD 2302	FEBRUARY 2025	AS SHOWN

CLIENT

THIELLS ROSEVILLE FIRE DISTRICT

NEW 26-100 FIRE HEADQUARTERS

THIELLS 26 FD

65 W RAMAPO ROAD GARNERVILLE, NY 10923

CONTRACT

CONTRACT M HVAC CONSTRUCTION

STATUS

FINAL BID DOCUMENT

SHEET TITLE

HVAC SCHEDULES

DRAWING No.

M 601.00

C:\Users\kmcdonald\Documents\TRFD2302_Central23-M_kmcdonaldDTNYD.rvt
2/25/2025 1:22:07 PM

ELECTRIC UNIT HEATERS

EQUIPMENT NO.	LOCATION	PERFORMANCE/CONSTRUCTION REQUIREMENTS: FAN DATA: TOTAL AIR FLOW (CFM)	THROW (FT.)	HEATING PERFORMANCE: OUTPUT HEATING CAPACITY (MBH)	AIR DATA: ENT. TEMP. (°F DB)	AIR DATA: LVG. TEMP. (°F DB)	HEATING MEDIUM: ELECTRIC: KW	NO. OF CONTROL STAGES	BASIS OF DESIGN INFORMATION: MNF	MODEL NO.	NOMINAL DIMENSIONS L x W x H (IN.)	NOMINAL OPERATING WEIGHT (LBS.)	ELECTRICAL DATA: VOLTS/PHASE	FLA (A)	MCA (A)	MOCP (A)	MECHANICAL NOTES	ELECTRICAL NOTES
EUH-1	OUTDOOR STORAGE - 114	250	28.0	6.8	60	85	2	1	STELPRO	ASHU0283CTCHAR	19.0 x 16.0 x 13.0	40.0	208/3	5.8	7.2	15	1	2,12
EUH-2	LAUNDRY - 115	250	28.0	25.6	60	98	8	1	STELPRO	ASHU0783C24CHAR	19.0 x 16.0 x 13.0	40.0	208/3	21.5	26.9	30	1	2,12
EUH-3	GEAR AREA - 112	450	31.0	17.0	60	95	5	1	STELPRO	ASHU0583CTCHAR	19.0 x 16.0 x 13.0	40.0	208/3	14.6	18.3	20	1	2,12
EUH-4	UTILITY ROOM - 110	250	28.0	6.8	60	85	2	1	STELPRO	ASHU0283CTCHAR	19.0 x 16.0 x 13.0	40.0	208/3	5.8	7.2	15	1	2,12
EUH-5	SCBA - 121	250	28.0	6.8	60	85	2	1	STELPRO	ASHU0283CTCHAR	19.0 x 16.0 x 13.0	40.0	208/3	5.8	7.2	15	1	2,12
EUH-6	UTILITY - M02	250	28.0	6.8	60	85	2	1	STELPRO	ASHU0283CTCHAR	19.0 x 16.0 x 13.0	40.0	208/3	5.8	7.2	15	1	2,12

MECHANICAL NOTES:
1. MANUFACTURER TO PROVIDE CEILING SUSPENSION KIT
2.

ELECTRICAL NOTES:
1. INTEGRAL DISCONNECT SWITCH [FIELD WIRED]
2. INTEGRAL DISCONNECT SWITCH [FACTORY WIRED]
3. INTEGRAL UNPOWERED RECEPTACLES [FIELD WIRED]
4. INTEGRAL POWERED RECEPTACLES [FACTORY WIRED]
5. INTEGRAL CONDENSATE PUMP [UNPOWERED]
6. INTEGRAL CONDENSATE PUMP [POWERED]
7. LOW VOLTAGE CONTROLS
8. LINE VOLTAGE CONTROLS
9. INTEGRAL STARTERS
10. MOTORIZED DAMPERS [24VAC]
11. MOTORIZED DAMPERS [120VAC]
12. SINGLE POINT POWER FEED
13. INDOOR UNIT POWERED FROM OUTDOOR UNIT
14. ELECTRICAL CONTRACTOR TO PROVIDE DISCONNECT SWITCH
15. ON SAME POWER FEED AS ASSOCIATED INDOOR UNIT

ELECTRIC CABINET UNIT HEATERS

EQUIPMENT NO.	LOCATION	PERFORMANCE/CONSTRUCTION REQUIREMENTS: FAN DATA: TOTAL AIR FLOW (CFM)	HEATING PERFORMANCE: OUTPUT HEATING CAPACITY (MBH)	AIR DATA: ENT. TEMP. (°F DB)	AIR DATA: LVG. TEMP. (°F DB)	HEATING MEDIUM: ELECTRIC: KW	NO. OF CONTROL STAGES	BASIS OF DESIGN INFORMATION: MNF	MODEL NO.	NOMINAL DIMENSIONS L x W x H (IN.)	NOMINAL OPERATING WEIGHT (LBS.)	ELECTRICAL DATA: VOLTS/PHASE	FLA (A)	MECHANICAL NOTES	ELECTRICAL NOTES
ECUH-1	DECON BATHROOM - 113	250	6.8	60	85	2	1	STELPRO	ADRR0281C24W	24.0 x 24.0 x 48.0	30.0	208/1	10.0	2-6	2,7
ECUH-2	SHOWER ROOM - 105A	250	6.8	60	85	2	1	STELPRO	ADRR0281C24W	24.0 x 24.0 x 48.0	30.0	208/1	10.0	2-6	2,7

MECHANICAL NOTES:
1. FACTORY PROVIDED BUILT-IN SINGLE POLE THERMOSTAT.
2. FACTORY PROVIDED DISSCONNECT SWITCH.
3. INTEGRATE WITH BMS AS ALTERNATE.
4. THERMAL PROTECTION WITH AUTOMATI RESET.
5. BUILT-IN ELECTROMIC LOW VOLTAGE RELAY WITH 24V TRANSFORMER.
6. LOW VOLTAGE THERMOSTAT.
7. FOUR PIECE TRIM FRAME

ELECTRICAL NOTES:
1. INTEGRAL DISCONNECT SWITCH [FIELD WIRED]
2. INTEGRAL DISCONNECT SWITCH [FACTORY WIRED]
3. INTEGRAL UNPOWERED RECEPTACLES [FIELD WIRED]
4. INTEGRAL POWERED RECEPTACLES [FACTORY WIRED]
5. INTEGRAL CONDENSATE PUMP [UNPOWERED]
6. INTEGRAL CONDENSATE PUMP [POWERED]
7. LOW VOLTAGE CONTROLS
8. LINE VOLTAGE CONTROLS
9. INTEGRAL STARTERS
10. MOTORIZED DAMPERS [24VAC]
11. MOTORIZED DAMPERS [120VAC]
12. SINGLE POINT POWER FEED
13. INDOOR UNIT POWERED FROM OUTDOOR UNIT
14. ELECTRICAL CONTRACTOR TO PROVIDE DISCONNECT SWITCH
15. ON SAME POWER FEED AS ASSOCIATED INDOOR UNIT

ELECTRIC BASEBOARD

EQUIPMENT NO.	LOCATION	PERFORMANCE/CONSTRUCTION REQUIREMENTS: TOTAL CAPACITY (MBH)	ELECTRICAL DATA: POWER (KW)	HEATING COIL DATA: VOLTAGE/PHASE	MCA (A)	MOCP (A)	BASIS OF DESIGN INFORMATION: MODEL NO.	MANUFACTURER	NOMINAL DIMENSIONS L x W x H (IN.)	NOMINAL OPERATING WEIGHT (LBS.)	MECHANICAL NOTES	ELECTRICAL NOTES
EBB-100	VESTIBULE - 100A	10.2	3.0	208/1	18.0	20.0	AALUX418308	STELPRO	71.0 x 4.5 x 6.5	25.0	2,3	2
EBB-105	FITNESS ROOM - 105	3.1	0.9	208/1	5.4	15.0	AALUX127098	STELPRO	106.5 x 2.0 x 4.5	27.0	1-2	2,7
EBB-107-1	DAY ROOM - 107	2.0	0.6	208/1	3.6	15.0	AALUX118068	STELPRO	71.0 x 2.0 x 4.5	20.0	1-2	2,7
EBB-107-2	DAY ROOM - 107	2.0	0.6	208/1	3.6	15.0	AALUX118068	STELPRO	71.0 x 2.0 x 4.5	20.0	1-2	2,7
EBB-107-3	DAY ROOM - 107	3.1	0.9	208/1	5.4	15.0	AALUX127098	STELPRO	106.5 x 2.0 x 4.5	27.0	1-2	2,7
EBB-122	DELIVERY - 122	10.2	3.0	208/1	18.0	20.0	AALUX418308	STELPRO	71.0 x 4.5 x 6.5	25.0	2,3	2
EBB-202-1	COMMISSIONERS - 202	3.1	0.9	208/1	5.4	15.0	AALUX127098	STELPRO	106.5 x 2.0 x 4.5	27.0	1-2	2,7
EBB-202-2	COMMISSIONERS - 202	3.1	0.9	208/1	5.4	15.0	AALUX127098	STELPRO	106.5 x 2.0 x 4.5	27.0	1-2	2,7
EBB-203-1	MULTI-PURPOSE ROOM - 203	3.1	0.9	208/1	5.4	15.0	AALUX127098	STELPRO	106.5 x 2.0 x 4.5	27.0	1-2	2,7
EBB-203-2	MULTI-PURPOSE ROOM - 203	3.1	0.9	208/1	5.4	15.0	AALUX127098	STELPRO	106.5 x 2.0 x 4.5	27.0	1-2	2,7
EBB-203A-1	MULTI-PURPOSE ROOM - 203A	3.1	0.9	208/1	5.4	15.0	AALUX127098	STELPRO	106.5 x 2.0 x 4.5	27.0	1-2	2,7
EBB-203A-2	MULTI-PURPOSE ROOM - 203A	3.1	0.9	208/1	5.4	15.0	AALUX127098	STELPRO	106.5 x 2.0 x 4.5	27.0	1-2	2,7
EBB-A-1	STAIR - 'A'-1	10.2	3.0	208/1	18.0	20.0	AALUX418308	STELPRO	71.0 x 4.5 x 6.5	25.0	2,3	2
EBB-A-3	STAIR-2 - 'A'-2	10.2	3.0	208/1	18.0	20.0	AALUX418308	STELPRO	71.0 x 4.5 x 6.5	25.0	2,3	2
EBB-A-4	STAIR-2 - 'A'-2	11.9	3.5	208/1	21.0	25.0	AALUX421358	STELPRO	83.0 x 4.5 x 6.5	29.0	2,3	2
EBB-B-1	STAIR-1 - 'B'-1	3.4	1.0	208/1	6.0	15.0	AALUX406108	STELPRO	24.0 x 4.5 x 6.5	9.0	2,3	2
EBB-B-2	STAIR-1 - 'B'-1	13.7	4.0	208/1	24.0	25.0	AALUX424408	STELPRO	95.0 x 5.0 x 7.0	34.0	2,3	2
EBB-B-3	STAIR-2 - 'B'-2	10.2	3.0	208/1	18.0	20.0	AALUX418308	STELPRO	71.0 x 4.5 x 6.5	25.0	2,3	2
EBB-B-4	STAIR-2 - 'B'-2	3.4	1.0	208/1	6.0	15.0	AALUX406108	STELPRO	24.0 x 4.5 x 6.5	9.0	2,3	2

MECHANICAL NOTES:
1. INTEGRATE WITH RTU/EVAPORATOR UNIT THERMOSTAT. BASEBOARD SHALL BE STAGE 2
2. PROVIDE LOW VOLTAGE RELAY KIT, MANUFACTURER PROVIDED 24 VOLT TRANSFORMER
3. MANUFACTURER PROVIDED INTEGRAL THEMOSTAT

ELECTRICAL NOTES:
1. INTEGRAL DISCONNECT SWITCH [FIELD WIRED]
2. INTEGRAL DISCONNECT SWITCH [FACTORY WIRED]
3. INTEGRAL UNPOWERED RECEPTACLES [FIELD WIRED]
4. INTEGRAL POWERED RECEPTACLES [FACTORY WIRED]
5. INTEGRAL CONDENSATE PUMP [UNPOWERED]
6. INTEGRAL CONDENSATE PUMP [POWERED]
7. LOW VOLTAGE CONTROLS
8. LINE VOLTAGE CONTROLS
9. INTEGRAL STARTERS
10. MOTORIZED DAMPERS [24VAC]
11. MOTORIZED DAMPERS [120VAC]
12. SINGLE POINT POWER FEED
13. INDOOR UNIT POWERED FROM OUTDOOR UNIT
14. ELECTRICAL CONTRACTOR TO PROVIDE DISCONNECT SWITCH
15. ON SAME POWER FEED AS ASSOCIATED INDOOR UNIT

ELECTRIC RADIANT

EQUIPMENT NO.	LOCATION	PERFORMANCE/CONSTRUCTION REQUIREMENTS: TOTAL CAPACITY (MBH)	ELECTRICAL DATA: POWER (KW)	HEATING COIL DATA: VOLTAGE/PHASE	MCA (A)	BASIS OF DESIGN INFORMATION: MODEL NO.	MANUFACTURER	NOMINAL DIMENSIONS L x W x H (IN.)	NOMINAL OPERATING WEIGHT (LBS.)	MECHANICAL NOTES	ELECTRICAL NOTES
ERH-1	GEAR AREA - 112	5.2	1.5	208/1	9.0	1445CL	CERAMICCIRCUIT INFRARED RADIANT HEATERS	46.0 x 144.0 x 15.0	28.0	1,2	7,14
ERH-2	GEAR AREA - 112	5.2	1.5	208/1	9.0	1445CL	CERAMICCIRCUIT INFRARED RADIANT HEATERS	46.0 x 144.0 x 15.0	28.0	1,2	7,14
ERH-3	GEAR AREA - 112	5.2	1.5	208/1	9.0	1445CL	CERAMICCIRCUIT INFRARED RADIANT HEATERS	46.0 x 144.0 x 15.0	28.0	1,2	7,14
ERH-4	GEAR AREA - 112	5.2	1.5	208/1	9.0	1445CL	CERAMICCIRCUIT INFRARED RADIANT HEATERS	46.0 x 144.0 x 15.0	28.0	1,2	7,14

MECHANICAL NOTES:
1. PROVIDE CEILING MOUNTING BRACKET
2. MANUFACTURER PROVIDED THERMOSTAT

ELECTRICAL NOTES:
1. INTEGRAL DISCONNECT SWITCH [FIELD WIRED]
2. INTEGRAL DISCONNECT SWITCH [FACTORY WIRED]
3. INTEGRAL UNPOWERED RECEPTACLES [FIELD WIRED]
4. INTEGRAL POWERED RECEPTACLES [FACTORY WIRED]
5. INTEGRAL CONDENSATE PUMP [UNPOWERED]
6. INTEGRAL CONDENSATE PUMP [POWERED]
7. LOW VOLTAGE CONTROLS
8. LINE VOLTAGE CONTROLS
9. INTEGRAL STARTERS
10. MOTORIZED DAMPERS [24VAC]
11. MOTORIZED DAMPERS [120VAC]
12. SINGLE POINT POWER FEED
13. INDOOR UNIT POWERED FROM OUTDOOR UNIT
14. ELECTRICAL CONTRACTOR TO PROVIDE DISCONNECT SWITCH
15. ON SAME POWER FEED AS ASSOCIATED INDOOR UNIT

VEHICLE EXHAUST FANS

EQUIPMENT NO.	LOCATION	AREA SERVED	SERVICE	TYPE	PERFORMANCE/CONSTRUCTION REQUIREMENTS: AIRFLOW (CFM)	ESP (IN. W.G)	FAN RPM	BHP	DRIVE TYPE	INLET SOUND dBA (SONES)	BASIS OF DESIGN INFORMATION: MNF	MODEL NO.	NOMINAL DIMENSIONS L x W x H (IN.)	NOMINAL OPERATING WEIGHT (LBS.)	ELECTRICAL DATA: VOLTS/PHASE	MOTOR HP	MOTOR RPM	MECHANICAL NOTES	ELECTRICAL NOTES
VX-1	LOW ROOF -	APPERATUS BAY	VEHICLE EXHAUST	UTILITY SET	0	0.00	0	0	DIRECT	-	-	-	0.0 x 0.0 x 0.0	0.0	208/3	3	0	1	14
VX-2	LOW ROOF -	APPERATUS BAY	VEHICLE EXHAUST	UTILITY SET	0	0.00	0	0	DIRECT	-	-	-	0.0 x 0.0 x 0.0	0.0	208/3	3	0	1	14

MECHANICAL NOTES:
1. MANUFACTURER PROVIDE MOTOR STARTERS

ELECTRICAL NOTES:
1. INTEGRAL DISCONNECT SWITCH [FIELD WIRED]
2. INTEGRAL DISCONNECT SWITCH [FACTORY WIRED]
3. INTEGRAL UNPOWERED RECEPTACLES [FIELD WIRED]
4. INTEGRAL POWERED RECEPTACLES [FACTORY WIRED]
5. INTEGRAL CONDENSATE PUMP [UNPOWERED]
6. INTEGRAL CONDENSATE PUMP [POWERED]
7. LOW VOLTAGE CONTROLS
8. LINE VOLTAGE CONTROLS
9. INTEGRAL STARTERS
10. MOTORIZED DAMPERS [24VAC]
11. MOTORIZED DAMPERS [120VAC]
12. SINGLE POINT POWER FEED
13. INDOOR UNIT POWERED FROM OUTDOOR UNIT
14. ELECTRICAL CONTRACTOR TO PROVIDE DISCONNECT SWITCH
15. ON SAME POWER FEED AS ASSOCIATED INDOOR UNIT

AIR OUTLETS

DESIGNATION	SYMBOL	BASIS OF DESIGN: MNF/MODEL NO.	DESCRIPTION	FACE SIZE (IN.)	AIRFLOW RANGE (CFM): MIN	MAX	NECK SIZE DIAMETER...	REMARKS
A	A (CFM)	NAILOR/UNI	SQUARE FACE CEILING DIFFUSER	24 x 24	0	200	6	
					201	315	8	
					316	450	10	
					451	650	12	
					651	850	14	
B	B (CFM)	NAILOR/UNI	SQUARE FACE CEILING DIFFUSER	12 x 12	0	80	4	
					81	125	5	
					126	200	6	
					201	320	8	
C	C (CFM) W x H	NAILOR/6145H	RETURN/EXHAUST GRILLE	SEE DRAWINGS	SEE DRAWINGS	SEE DRAWINGS	N/A	
D	D (CFM) W x H	NAILOR/6145H-O	RETURN/EXHAUST GRILLE	SEE DRAWINGS	SEE DRAWINGS	SEE DRAWINGS	N/A	
E	E (CFM) W x H ° DEFLECTION	NAILOR/61DH-O	SUPPLY REGISTER	SEE DRAWINGS	SEE DRAWINGS	SEE DRAWINGS	N/A	
F	F (CFM) DIA	NAILOR-R-UNI	ROUND FACE CEILING/DUCT MOUNTED DIFFUSER	15" DIA	0	200	6	
				18" DIA	201	350	8	
				22" DIA	351	550	10	
G	G (CFM) DIA	NAILOR/R-UNI	ROUND FACE DUCT MOUNTED DIFFUSER	26" DIA	551	800	12	
				34" DIA	801	1,400	16	
H	H (CFM) W x H	NAILOR/51DGS	TRANSFER GRILLE	SEE DRAWINGS	SEE DRAWINGS	SEE DRAWINGS	N/A	
I	I (CFM) PLENUM LENGTH NO. OF SLOTS	NAILOR FLH30	LINEAR SLOT HIGH FLOW DIFFUSERS	1.5" (2) SLOT x 5'L	SEE DRAWINGS	SEE DRAWINGS	N/A	2,4,5
J	J (CFM) PLENUM LENGTH NO. OF SLOTS	NAILOR FLV20	LINEAR SLOT JET FLOW DIFFUSERS	2" (1) SLOT x 5'L	SEE DRAWINGS	SEE DRAWINGS	N/A	
K	K (CFM)	NAILOR/6145H	LOUVERED EXHAUST GRILLE	24 x 24	0	700	12	
					701	950	14	
L	C (CFM) W x H	NAILOR/6145H	RETURN/EXHAUST GRILLE	SEE DRAWINGS	SEE DRAWINGS	SEE DRAWINGS	N/A	1,3

REMARKS:
1. PROVIDE LIGHT SHIELD FOR ALL PLENUM RETURN GRILLES.
2. CONFIGURE ONE SLOT TO BE HORIZONTAL AND ONE SLOT TO BE VERTICAL.
3. FINISH SHALL BE BLACK.
4. PROVIDE 5' PLENUM BOX FOR DIFFUSER.
5. PROVIDE FINISH GROUNDING AT THE ENDS OF OF LINEAR SPAN FOR MOUNTING AND BRACING.

H2M architects + engineers
538 Broad Hollow Road, 4th Floor East
Melville, NY 11747
631.756.8000 • www.h2m.com
NY Architecture & Landscape Architecture: No Certificate Required
NY Engineering Certificate of Authorization No.: 0018178

CONSULTANTS:

MARK	DATE	DESCRIPTION

STATE OF NEW YORK · JOHN LAHEY · 101303 · LICENSED PROFESSIONAL ENGINEER

JOHN M. LAHEY, P.E.
NY PROFESSIONAL ENGINEER Lic. No. 101303
Exp. Date

"IN ACCORDANCE WITH ARTICLE 145, SECTION 7209 OF THE NYS EDUCATION LAW, ALTERATION OF THIS DOCUMENT EXCEPT BY A LICENSED PROFESSIONAL IS ILLEGAL"

DESIGNED BY:	DRAWN BY:	CHECKED BY:	REVIEWED BY:
Designer	Author	Checker	Approver

PROJECT No:	DATE:	SCALE:
TRFD 2302	FEBRUARY 2025	AS SHOWN

CLIENT
THIELLS ROSEVILLE FIRE DISTRICT

NEW 26-100 FIRE HEADQUARTERS

65 W RAMAPO ROAD
GARNERVILLE, NY 10923

CONTRACT
CONTRACT M
HVAC CONSTRUCTION

STATUS
FINAL BID DOCUMENT

SHEET TITLE
HVAC SCHEDULES

DRAWING No.
M 602.00

C:\Users\kmcdonald\Documents\TRFD2302_Central23-M_kmcdonaldDTNVD.rvt
2/25/2025 1:22:07 PM

VRF EVAPORATOR UNITS

EQUIPMENT NO.	LOCATION	PERFORMANCE/CONSTRUCTION REQUIREMENTS					BASIS OF DESIGN INFORMATION						MECHANICAL NOTES	ELECTRICAL NOTES
		REFRIGERANT TYPE	AIRFLOW (CFM)	HEAT PUMP PERFORMANCE			MNF	MODEL NO.	NOMINAL DIMENSIONS L x W x H (IN.)	NOMINAL OPERATING WEIGHT (LBS.)	ELECTRICAL DATA			
				TOTAL HEATING CAPACITY (MBH)	TOTAL COOLING CAPACITY (MBH)	SENSIBLE COOLING CAPACITY (MBH)					VOLTS /PHASE	MCA (A)		
EU-100A	CORRIDOR - 100	R-410A	390	11	12.7	10	TOSHIBA/CARRIER	MMU-UP0151MHP-UL	23.0 x 23.0 x 11.0	35.30	208/1	0.65	1-7	7,14
EU-100B	CORRIDOR - 100	R-410A	390	11	12.7	10	TOSHIBA/CARRIER	MMU-UP0151MHP-UL	23.0 x 23.0 x 11.0	35.30	208/1	0.65	1-7	7,14
EU-102	CHIEFS OFFICE - 102	R-410A	670	17.6	19.4	13.6	TOSHIBA/CARRIER	MMU-UP0241HP-UL	33.1 x 33.1 x 12.0	60.00	208/1	1.09	1-7	7,14
EU-106	LINE OFFICERS - 106	R-410A	670	17.6	19.4	13.6	TOSHIBA/CARRIER	MMU-UP0241HP-UL	33.1 x 33.1 x 12.0	60.00	208/1	1.09	1-7	7,14
EU-109	WOMEN'S AUXILLARY - 109	R-410A	340	6.8	7.9	75	TOSHIBA/CARRIER	MMU-UP0091MHP-UL	23.0 x 23.0 x 11.0	35.30	208/1	0.43	1-7	7,14
EU-200	CORRIDOR - 200	R-410A	390	11	12.7	10	TOSHIBA/CARRIER	MMU-UP0151MHP-UL	23.0 x 23.0 x 11.0	35.30	208/1	0.65	1-7	7,14
EU-201	KITCHEN - 201	R-410A	730	22.1	24.2	17	TOSHIBA/CARRIER	MMU-UP0361BHP-UL	33.1 x 33.1 x 12.6	60.00	208/1	1.09	1-7	7,14
EU-203	MULTI-PURPOSE ROOM - 203	R-410A	390	11	12.7	10	TOSHIBA/CARRIER	MMU-UP0151MHP-UL	23.0 x 23.0 x 11.0	35.30	208/1	0.65	1-7	7,14
EU-205	PURCHASING - 205	R-410A	390	11	12.7	10	TOSHIBA/CARRIER	MMU-UP0151MHP-UL	23.0 x 23.0 x 11.0	35.30	208/1	0.65	1-7	7,14
EU-206	PRESIDENTS - 206	R-410A	390	11	12.7	10	TOSHIBA/CARRIER	MMU-UP0151MHP-UL	23.0 x 23.0 x 11.0	35.30	208/1	0.65	1-7	7,14

MECHANICAL NOTES:
1. MANUFACTURER PROVIDED WIRED, WALL MOUNTED PROGRAMABLE THERMOSTAT
2. INSTALL ALL EQUIPMENT AND COMPONENTS ACCORDING TO MANUFACTURERS INSTRUCTIONS
3. PROVIDE BACNET CAPATIBILITY
4. PROVIDE DRAIN PAN SENSOR. UNIT SHALL SHUT OFF IF HIGH WATER IS SENSED
5. INTEGRAL CONDENSATE PUMP
6. REMOVABLE WASHABLE FILTERS
7. INTERLOCK WITH ASSOCIATED ELECTRIC BASE BOARD HEATER

ELECTRICAL NOTES:
1. INTEGRAL DISCONNECT SWITCH [FIELD WIRED]
2. INTEGRAL DISCONNECT SWITCH [FACTORY WIRED]
3. INTEGRAL UNPOWERED RECEPTACLES [FIELD WIRED]
4. INTEGRAL POWERED RECEPTACLES [FACTORY WIRED]
5. INTEGRAL CONDENSATE PUMP [UNPOWERED]
6. INTEGRAL CONDENSATE PUMP [POWERED]
7. LOW VOLTAGE CONTROLS
8. LINE VOLTAGE CONTROLS
9. INTEGRAL STARTERS
10. MOTORIZED DAMPERS [24VAC]
11. MOTORIZED DAMPERS [120VAC]
12. SINGLE POINT POWER FEED
13. INDOOR UNIT POWERED FROM OUTDOOR UNIT
14. ELECTRICAL CONTRACTOR TO PROVIDE DISCONNECT SWITCH
15. ON SAME POWER FEED AS ASSOCIATED INDOOR UNIT

GAS UNIT HEATERS

EQUIPMENT NO.	LOCATION	PERFORMANCE/CONSTRUCTION REQUIREMENTS									BASIS OF DESIGN INFORMATION						FLA (Current)	MECHANICAL NOTES	ELECTRICAL NOTES
		FAN DATA		HEATING PERFORMANCE							MNF	MODEL NO.	NOMINAL DIMENSIONS L x W x H (IN.)	NOMINAL OPERATING WEIGHT (LBS.)	ELECTRICAL DATA				
					AIR DATA		HEATING MEDIUM GAS												
		TOTAL AIR FLOW (CFM)	THROW (FT.)	OUTPUT HEATING CAPACITY (MBH)	ENT. TEMP. (°F DB)	LVG. TEMP. (°F DB)	MAX. INPUT (MBH)	MIN./MAX/ INLET PRESS. (IN. W.G.)	EFFICIENCY (%)	CONN.					VOLTS/PHASE	MOTOR HP			
GUH-1	APPARATUS BAY - 120	2140	51.0	123.0	8	61	150	7.0/14.0	82.0	0.5	MODINE	PTS150SS01	35.5 x 31.8 x 23.1	165.0	115/1	1/6	5.05 A	1-8	7,14
GUH-2	APPARATUS BAY - 120	2140	51.0	123.0	8	61	150	7.0/14.0	82.0	0.5	MODINE	PTS150SS01	35.5 x 31.8 x 23.1	165.0	115/1	1/6	5.05 A	1-8	7,14
GUH-3	APPARATUS BAY - 120	2140	51.0	123.0	8	61	150	7.0/14.0	82.0	0.5	MODINE	PTS150SS01	35.5 x 31.8 x 23.1	165.0	115/1	1/6	5.05 A	1-8	7,14
GUH-4	APPARATUS BAY - 120	2140	51.0	123.0	8	61	150	7.0/14.0	82.0	0.5	MODINE	PTS150SS01	35.5 x 31.8 x 23.1	165.0	115/1	1/6	5.05 A	1-8	7,14
GUH-5	APPARATUS BAY - 120	2140	51.0	123.0	8	61	150	7.0/14.0	82.0	0.5	MODINE	PTS150SS01	35.5 x 31.8 x 23.1	165.0	115/1	1/6	5.05 A	1-8	7,14
GUH-6	APPARATUS BAY - 120	2140	51.0	123.0	8	61	150	7.0/14.0	82.0	0.5	MODINE	PTS150SS01	35.5 x 31.8 x 23.1	165.0	115/1	1/6	5.05 A	1-8	7,14
GUH-7	APPARATUS BAY - 120	2140	51.0	123.0	8	61	150	7.0/14.0	82.0	0.5	MODINE	PTS150SS01	35.5 x 31.8 x 23.1	165.0	115/1	1/6	5.05 A	1-8	7,14
GUH-8	STORAGE - M01	720	27.0	37.4	8	56	45	7.0/14.0	83.0	0.5	MODINE	HDS 30AS01	26.8 x 22.0 x 13.2	72.0	115/1	1/15	4.20 A	1-8	7,14
GUH-9	STORAGE - M01	720	27.0	37.4	8	56	45	7.0/14.0	83.0	0.5	MODINE	HDS 30AS01	26.8 x 22.0 x 13.2	72.0	115/1	1/15	4.20 A	1-8	7,14

MECHANICAL NOTES:
1. PROVIDE BMS READY WALL MOUNT THERMOSTAT
2. 4" VERTICAL CONCENTRIC VENT KIT
3. PIPE HANGER ADAPTOR KIT
4. VERTICAL DEFLECTOR BLADES
5. FINGER PROOF FAN GUARD
6. STAINLESS STEEL HEAT EXCHNAGER AND ALUMINZED STEEL BURNER
7. DIRECT SPARK IGNITION
8. INTERLOCK WITH APPARATUS BAY DOORS.

ELECTRICAL NOTES:
1. INTEGRAL DISCONNECT SWITCH [FIELD WIRED]
2. INTEGRAL DISCONNECT SWITCH [FACTORY WIRED]
3. INTEGRAL UNPOWERED RECEPTACLES [FIELD WIRED]
4. INTEGRAL POWERED RECEPTACLES [FACTORY WIRED]
5. INTEGRAL CONDENSATE PUMP [UNPOWERED]
6. INTEGRAL CONDENSATE PUMP [POWERED]
7. LOW VOLTAGE CONTROLS
8. LINE VOLTAGE CONTROLS
9. INTEGRAL STARTERS
10. MOTORIZED DAMPERS [24VAC]
11. MOTORIZED DAMPERS [120VAC]
12. SINGLE POINT POWER FEED
13. INDOOR UNIT POWERED FROM OUTDOOR UNIT
14. ELECTRICAL CONTRACTOR TO PROVIDE DISCONNECT SWITCH
15. ON SAME POWER FEED AS ASSOCIATED INDOOR UNIT

ELECTRIC WALL HEATERS (WH)

EQUIPMENT NO.	LOCATION	PERFORMANCE/CONSTRUCTION REQUIREMENTS							BASIS OF DESIGN INFORMATION								MECHANICAL NOTES	ELECTRICAL NOTES
		FAN DATA		HEATING PERFORMANCE					MNF	MODEL NO.	NOMINAL DIMENSIONS L x W x H (IN.)	NOMINAL OPERATING WEIGHT (LBS.)	ELECTRICAL DATA					
					AIR DATA		HEATING MEDIUM ELECTRIC											
		TOTAL AIR FLOW (CFM)	THROW (FT.)	OUTPUT HEATING CAPACITY (MBH)	ENT. TEMP. (°F DB)	LVG. TEMP. (°F DB)	KW	NO. OF CONTROL STAGES					VOLTS/PHASE	FLA (A)	MCA (A)	MOCP (A)		
WH-1	M. TOILET - 209	160	13.0	5.1	60	90	1.5	0	STELPRO	AWFA1501C24W	16.0 x 3.0 x 23.0	20.0	208/1	7.9	9.9	15	1-4	1-2
WH-2	W. TOILET - 207	160	13.0	5.1	60	90	1.5	0	STELPRO	AWFA1501C24W	16.0 x 3.0 x 23.0	20.0	208/1	7.9	9.9	15	1-4	1-2
WH-3	PANTRY - 201A	300	0.0	1.7	60	0	0.5	0	STELPRO	ASSO1008T2W	9.0 x 4.0 x 12.0	7.5	208/1	5.5	6.9	15	1-4	1-2
WH-4	STAIR - 'A'-1	160	13.0	5.1	60	90	1.5	0	STELPRO	AWFA1501C24W	16.0 x 3.0 x 23.0	20.0	208/1	7.9	9.9	15	1-4	1-2

MECHANICAL NOTES:
1. FACTORY PROVIDED BUILT-IN SINGLE POLE THERMOSTAT.
2. FACTORY PROVIDED DISCONNECT SWITCH.
3. THERMAL PROTECTION WITH AUTOMATIC RESET.
4. BUILT-IN ELECTRONIC LOW VOLTAGE RELAY WITH 24V TRANSFORMER.

ELECTRICAL NOTES:
1. INTEGRAL DISCONNECT SWITCH [FACTORY WIRED]]
2. LOW VOLTAGE CONTROLS

AIR-COOLED CONDENSING UNITS

EQUIPMENT NO.	LOCATION	SYSTEM SERVED	TYPE	PERFORMANCE/CONSTRUCTION REQUIREMENTS						BASIS OF DESIGN INFORMATION							MECHANICAL NOTES	ELECTRICAL NOTES
				REFRIG. TYPE	NOMINAL TONS	CORRECTED HEATING CAPACITY	CORRECTED COOLING CAPACITY (MBH)	OUTDOOR AIR TEMP		MNF	MODEL NO.	NOMINAL DIMENSIONS L x W x H (IN.)	NOMINAL OPERATING WEIGHT (LBS.)	ELECTRICAL DATA				
								COOLING RANGE (°F DB)	HEATING RANGE (°F DB)					VOLTS/PHASE	MCA (A)	MOCP (A)		
DSCU-1	HIGH ROOF -	DSEU-1	OUTDOOR CONDENSING UNIT	R410A	1.50	18.0	18.0	-22 ~ 122	-22 ~ 86	CARRIER	38MARBQ18AA3	15.0 x 35.0 x 27.0	100.97	208/1	16	25	1,2-6	7,14,15
DSCU-2	LOW ROOF -	DSEU-2	OUTDOOR CONDENSING UNIT	R410A	1.50	18.0	18.0	-22 ~ 122	-22 ~ 86	CARRIER	38MARBQ18AA3	15.0 x 35.0 x 27.0	100.97	208/1	16	25	1-4	7,14,15
DSCU-3	LOW ROOF -	DSEU-3	OUTDOOR CONDENSING UNIT	R410A	0.75	11.8	9.0	-22 ~ 122	-22 ~ 86	CARRIER	38MARBQ09AA3	13.0 x 32.0 x 22.0	74.00	208/1	15	15	1-4	7,14,15

MECHANICAL NOTES:
1. PROVIDE 18" ROOF RAIL
2. VARIABLE SPEED COMPRESSOR
3. FACTORY INSTALLED BASE PAN HEATER
4. FACTORY INSTALLED CRANK CASE HEATER
5. CONDENSER HIGH TEMP PROTECTION
6. ANTI CORROSIVE FIN COATING
7. LOW AMBIENT KIT

ELECTRICAL NOTES:
1. INTEGRAL DISCONNECT SWITCH [FIELD WIRED]
2. INTEGRAL DISCONNECT SWITCH [FACTORY WIRED]
3. INTEGRAL UNPOWERED RECEPTACLES [FIELD WIRED]
4. INTEGRAL POWERED RECEPTACLES [FACTORY WIRED]
5. INTEGRAL CONDENSATE PUMP [UNPOWERED]
6. INTEGRAL CONDENSATE PUMP [POWERED]
7. LOW VOLTAGE CONTROLS
8. LINE VOLTAGE CONTROLS
9. INTEGRAL STARTERS
10. MOTORIZED DAMPERS [24VAC]
11. MOTORIZED DAMPERS [120VAC]
12. SINGLE POINT POWER FEED
13. INDOOR UNIT POWERED FROM OUTDOOR UNIT
14. ELECTRICAL CONTRACTOR TO PROVIDE DISCONNECT SWITCH
15. ON SAME POWER FEED AS ASSOCIATED INDOOR UNIT

H2M architects + engineers

538 Broad Hollow Road, 4th Floor East
Melville, NY 11747
631.756.8000 • www.h2m.com
NY Architecture & Landscape Architecture: No Certificate Required
NY Engineering Certificate of Authorization No.: 0018178

CONSULTANTS:

MARK	DATE	DESCRIPTION

STATE OF NEW YORK · JOHN LAHEY · 101303 · LICENSED PROFESSIONAL ENGINEER

JOHN M. LAHEY, P.E.
NY PROFESSIONAL ENGINEER Lic. No. 101303

Exp. Date

"IN ACCORDANCE WITH ARTICLE 145, SECTION 7209 OF THE NYS EDUCATION LAW, ALTERATION OF THIS DOCUMENT EXCEPT BY A LICENSED PROFESSIONAL IS ILLEGAL"

DESIGNED BY:	DRAWN BY:	CHECKED BY:	REVIEWED BY:
JML	KCM	JML	Approver
PROJECT No: TRFD 2302	DATE: FEBRUARY 2025	SCALE: AS SHOWN	

CLIENT

THIELLS ROSEVILLE FIRE DISTRICT

NEW 26-100 FIRE HEADQUARTERS

THIELLS 26 FD

65 W RAMAPO ROAD GARNERVILLE, NY 10923

CONTRACT

CONTRACT M HVAC CONSTRUCTION

STATUS

FINAL BID DOCUMENT

SHEET TITLE

SCHEDULES

DRAWING No.

M 603.00

C:\Users\kmcdonald\Documents\TRFD2302_Central25-M_kmcdonald\DTNVD.rvt
2/25/2025 1:22:07 PM

FOR QUESTIONS, CALL THE
NYC Office
REGION 17
PHONE: (646) 723 - 3365
EMAIL: reg17@captiveaire.com

PATENT NUMBERS

EXHAUST HOODS ND-2/BD-2/SND-2 (CANADA) - CA PATENT 2520435 C.

HOOD INFORMATION - JOB#7047938

HOOD NO	TAG	MODEL	MANUFACTURER	LENGTH	MAX COOKING TEMP	TYPE	APPLIANCE DUTY	DESIGN CFM/FT	TOTAL EXH CFM	EXHAUST PLENUM RISER(S) WIDTH	LENG	HEIGHT	DIA	CFM	VEL	SP	HOOD CONSTRUCTION	HOOD CONFIG END TO END	ROW
1		5424 ND-2	CAPTIVEAIRE	7' 0"	600 DEG	I	HEAVY	225	1575			4"	12"	1575	2005	-0.785"	430 SS WHERE EXPOSED	ALONE	ALONE

HOOD INFORMATION

HOOD NO	TAG	FILTER(S) TYPE	QTY	HEIGHT	LENGTH	EFFICIENCY @ 7 MICRONS	LIGHT(S) QTY	TYPE	WIRE GUARD	LOCATION	SIZE	UTILITY CABINET(S) FIRE SYSTEM TYPE	SIZE	ELECTRICAL MODEL #	SWITCHES QUANTITY	FIRE SYSTEM PIPING	HOOD HANGING WEIGHT
1		CAPTRATE SOLO FILTER	5	20"	16"	85% SEE FILTER SPEC	2	RECESSED ROUND	NO	RIGHT	12"x54"x24"	TANK FS	4.0/4.0			YES	647 LBS

HOOD OPTIONS

HOOD NO	TAG	OPTION
1		FIELD WRAPPER 18.00" HIGH FRONT, LEFT, RIGHT.
		BACKSPLASH 80.00" HIGH X 96.00" LONG 430 SS VERTICAL.
		SENSOR-CV.

FIRE SYSTEM INFORMATION - JOB#7047938

FIRE SYSTEM NO	TAG	TYPE	SIZE	MAX FP	DESIGN FP	INSTALLATION SYSTEM	LOCATION ON HOOD
1		TANK FS	4.0/4.0	40	23	FIRE CABINET RIGHT	RIGHT, HOOD 1

GAS VALVE(S)

FIRE SYSTEM NO	TAG	TYPE	SIZE	SUPPLIED BY
1		SC ELECTRICAL	2.000	CAPTIVEAIRE SYSTEMS

FIRE SYSTEM PARTS LIST KEY

FIRE SYSTEM NO	TAG	KEY NUMBER - PART DESCRIPTION	QTY BY FACTORY	QTY BY DIST
1		0 - 0 - TANK FIRE SUPPRESSION POST-DISCHARGE PROCEDURE UTILITY CABINET LABEL SHEET.	1	0
		0 - 0 - TANK FIRE SUPPRESSION MAINTENANCE GUIDE UTILITY CABINET LABEL SHEET.	1	0
		0 - 0 - 12-F28021-32144-DT-360 DUCT FIRE THERMOSTAT WITH 12 FOOT WIRE LEADS. ND, CLOSE ON TEMP RISE AT 360°F. (A0034310).	1	0
		0 - 0 - 4429K153 1/2" MALE NPT TO 1/2" FEMALE NPT ELBOW, BRASS.	2	0
		0 - 0 - 4429K422 1/2" X 1/4" BRASS REDUCING BUSHING.	1	0
		0 - 0 - 79525 1/2" 90 PRO-PRESS ELBOW WITH 1/2" NPT FEMALE CONNECTION, VIEGA.	1	0
		0 - 0 - 79580 1/2" X 1/2" PRO-PRESS TEE X 1/2" NPT FEMALE CONNECTION, VIEGA.	2	0
		0 - 0 - 87-120042-001 SECONDARY ACTUATOR VALVE (SVA) - SINGLE ACTUATOR, REQUIRES PRIMARY RELEASE ACTUATOR, TANK FIRE SUPPRESSION.	1	0
		0 - 0 - 87-120045-001 HOSE, SECONDARY ACTUATOR HOSE, 7.5" BRAIDED STAINLESS STEEL, TANK FIRE SUPPRESSION.	1	0
		0 - 0 - 87-300001-001 TANK - PRESSURIZED TANK USED FOR TANK FIRE SUPPRESSION.	2	0
		0 - 0 - 87-300030-001 PRIMARY ACTUATOR KIT (PAK) - ACTUATOR AND RELEASE SOLENOID ASSEMBLY, ONE NEEDED PER FIRE SYSTEM, SUPERVISED, TANK FIRE SUPPRESSION.	1	0
		0 - 0 - 87-300030-001 PRIMARY ACTUATOR KIT (PAK) - ACTUATOR AND RELEASE SOLENOID ASSEMBLY, ONE NEEDED PER FIRE SYSTEM, SUPERVISED, TANK FIRE SUPPRESSION.	1	0
		0 - 0 - 87-300152-001 HARDWARE, SVA BOLTS, TANK FIRE SUPPRESSION.	8	0
		0 - 0 - 98694A115 HARDWARE, DATANKLOCK LOCKING BRACKET SQUARE NUTS 5/16" ZINC, TANK FIRE SUPPRESSION.	4	0
		0 - 0 - A0034332 JUNCTION BOX FOR MANUAL PULL STATION. 1.5" DEEP BACK BOX, RED COLOR.	1	0
		0 - 0 - A31484 1/4" NPT SCHRADER VALVE AND CAP, JB INDUSTRIES. 1/4" FLARE X 1/4" MPT HALF UNION. USED ON TANK SERVICE PORT.	1	0
		0 - 0 - DATANKLOCK DISCHARGE ADAPTER TANK LOCKING PLATE FOR FIRE SYSTEM TANK INSTALLATION IN UTILITY CABINETS, TANK FIRE SUPPRESSION.	2	0
		0 - 0 - TANK STRAP TANK STRAP - USED FOR TANK FIRE SUPPRESSION.	6	0
		0 - 0 - TFS-UCTANKBRACKET TANK BRACKET FOR FIRE SYSTEM TANK INSTALLATION IN UTILITY CABINETS, TANK FIRE SUPPRESSION.	2	0
		0 - 0 - WK-283952-000 DISCHARGE ADAPTER, TANK FIRE SUPPRESSION.	2	0
		34 - 34 - A0034331 24VDC SINGLE ACTION MANUAL ACTUATION DEVICE (PUSH/PULL STATION) WITH PROTECTIVE COVER, ONE (1) NORMALLY OPEN CONTACT. RED COLOR.	1	0
		ADDITIONAL PARTS TO BE DETERMINED...		

SPECIFICATION: CAPTRATE• GREASE-STOP• SOLO FILTER

THE CAPTRATE GREASE-STOP SOLO FILTER IS A SINGLE-STAGE FILTER FEATURING A UNIQUE S-BAFFLE DESIGN IN CONJUNCTION WITH A SLOTTED REAR BAFFLE DESIGN, TO DELIVER EXCEPTIONAL FILTRATION EFFICIENCY.

FILTER IS STAINLESS STEEL CONSTRUCTION, AND SIZED TO FIT INTO STANDARD 2-INCH DEEP HOOD CHANNEL(S).

UNITS SHALL INCLUDE STAINLESS STEEL HANDLES AND A FASTENING DEVICE TO SECURE THE TWO COMPONENTS WHEN ASSEMBLED.

GREASE EXTRACTION EFFICIENCY PERFORMANCE SHALL REMOVE AT LEAST 75% OF GREASE PARTICLES FIVE MICRONS IN SIZE, AND 85% GREASE PARTICLES SEVEN MICRONS IN SIZE AND LARGER, WITH A CORRESPONDING PRESSURE DROP NOT TO EXCEED 10 INCHES OF WATER GAUGE.

THE CAPTRATE GREASE-STOP SOLO WAS TESTED TO ASTM STANDARD ASTM F2519-05. MANUFACTURER APPROVED FOR USE IN SOLID FUEL APPLICATIONS AS A SPARK ARRESTER.

EFFICIENCY VS. PARTICLE DIAMETER

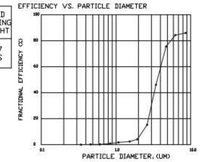

PRESSURE DROP VS. FLOW RATE

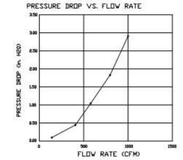

CAPTRATE FILTERS ARE BUILT IN COMPLIANCE WITH:
NFPA #96.
NSF STANDARD #2.
UL STANDARD #1046.
INT. MECH. CODE (IMC).
ULC-S649.

FULL LENGTH HANGING ANGLE (HARDWARE BY INSTALLER)

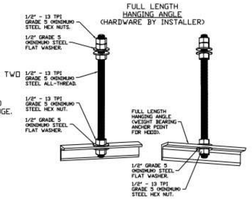

ASSEMBLY INSTRUCTIONS

HANGING ANGLE MUST BE SUPPORTED WITH 1/2" - 13 TPI GRADE 5 (MINIMUM) ALL-THREAD. SANDWICH HANGING ANGLES AND CEILING ANCHOR POINTS WITH 1/2" GRADE 5 (MINIMUM) STEEL FLAT WASHERS AND 1/2" - 13 TPI GRADE 5 (MINIMUM) HEX NUTS AS SHOWN. MUST USE DOUBLED HEX NUT CONFIGURATION ABOVE CEILING ANCHORS. SINGLE HEX NUT BENEATH HANGING ANGLE IS ACCEPTABLE FOR FULL LENGTH HANGING ANGLES. MAINTAIN 1/4" OF EXPOSED THREADS BENEATH BOTTOM HEX NUT. TORQUE ALL HEX NUTS TO 57 FT-LBS.

CLEARANCE TO COMBUSTIBLES

HOODS #	SURFACE	*CLEARANCE
1	TOP	18"
	FRONT	0"
	BACK	18"
	LEFT	18"
	RIGHT	0"

- *0" CLEARANCE TO COMBUSTIBLES CONFORMS TO UL710 STANDARD.
- HOOD MOUNTED UTILITY CABINETS REQUIRE 36" SERVICE CLEARANCE.

HOOD CORNER HANGING ANGLE (HARDWARE BY INSTALLER)

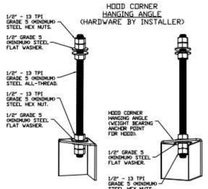

ASSEMBLY INSTRUCTIONS

HANGING ANGLE MUST BE SUPPORTED WITH 1/2" - 13 TPI GRADE 5 (MINIMUM) ALL-THREAD. SANDWICH HANGING ANGLES AND CEILING ANCHOR POINTS WITH 1/2" GRADE 5 (MINIMUM) STEEL FLAT WASHERS AND 1/2" - 13 TPI GRADE 5 (MINIMUM) HEX NUTS AS SHOWN. MUST USE DOUBLED HEX NUT CONFIGURATION BENEATH HOOD HANGING ANGLES AND ABOVE CEILING ANCHORS. MAINTAIN 1/4" OF EXPOSED THREADS BENEATH BOTTOM HEX NUT. TORQUE ALL HEX NUTS TO 57 FT-LBS.

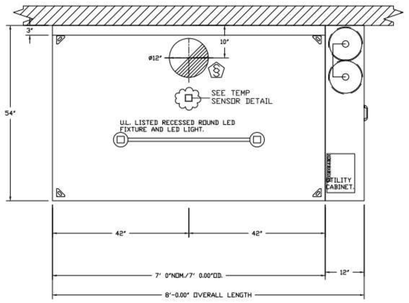

PLAN VIEW - HOOD #1
7' 0.00" LONG 5424ND-2

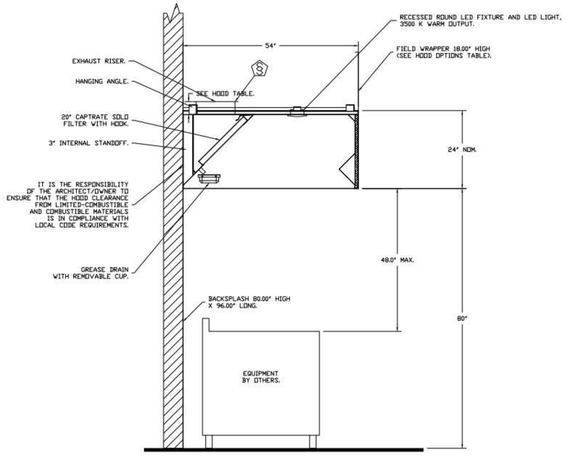

SECTION VIEW - MODEL 5424ND-2
HOOD - #1

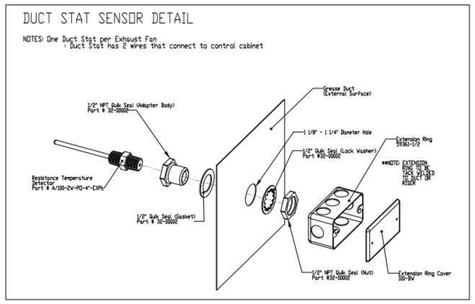

SYSTEM DESIGN VERIFICATION (SDV)

IF ORDERED, CAS SERVICE WILL PERFORM A SYSTEM DESIGN VERIFICATION (SDV) ONCE ALL EQUIPMENT HAS HAD A COMPLETE START UP PER THE OPERATION AND INSTALLATION MANUAL. TYPICALLY, THE SDV WILL BE PERFORMED AFTER ALL INSPECTIONS ARE COMPLETE.

ANY FIELD RELATED DISCREPANCIES THAT ARE DISCOVERED DURING THE SDV WILL BE BROUGHT TO THE
ATTENTION OF THE GENERAL CONTRACTOR AND CORRESPONDING TRADES ON SITE. THESE ISSUES WILL BE DOCUMENTED AND FORWARDED TO THE APPROPRIATE SALES OFFICE. IF CAS SERVICE HAS TO
RESOLVE A DISCREPANCY THAT IS A FIELD ISSUE, THE GENERAL CONTRACTOR WILL BE NOTIFIED AND BILLED FOR THE WORK. SHOULD A RETURN TRIP BE REQUIRED DUE TO ANY FIELD RELATED DISCREPANCY THAT CANNOT BE RESOLVED DURING THE SDV, THERE WILL BE ADDITIONAL TRIP CHARGES.

DURING THE SDV, CAS SERVICE WILL ADDRESS ANY DISCREPANCY THAT IS THE FAULT OF THE MANUFACTURER. SHOULD A RETURN TRIP BE REQUIRED, THE GENERAL CONTRACTOR AND APPROPRIATE SALES OFFICE WILL BE NOTIFIED. THERE WILL BE NO ADDITIONAL CHARGES FOR MANUFACTURER DISCREPANCIES.

REVISIONS

DESCRIPTION	DATE

CAPTIVEAIRE
www.captiveaire.com
NYC Office
254 West 51st St, APT 17L, New York, NY 10019 PHONE: (646) 723 - 3365 FAX: 6464034230 EMAIL: reg17@captiveaire.com

MCKF2401 Fire house - Garnerville NY
65 West Ramapo Road,
Thiells, NY, 10923

DATE: 9/17/2024
DWG.#: 7047938
DRAWN BY: Mark Evans
SCALE: 3/4" = 1'-0"
MASTER DRAWING
SHEET NO. 1

H2M architects + engineers
538 Broad Hollow Road, 4th Floor East
Melville, NY 11747
631.756.8000 • www.h2m.com
NY Architecture & Landscape Architecture: No Certificate Required
NY Engineering Certificate of Authorization No.: 0018178

CONSULTANTS:

MARK	DATE	DESCRIPTION

STATE OF NEW YORK · JOHN M. LAHEY · 101303 · LICENSED PROFESSIONAL ENGINEER

JOHN M. LAHEY, P.E.
NY PROFESSIONAL ENGINEER Lic. No. 101303
Exp. Date

"IN ACCORDANCE WITH ARTICLE 145, SECTION 7209 OF THE NYS EDUCATION LAW, ALTERATION OF THIS DOCUMENT EXCEPT BY A LICENSED PROFESSIONAL IS ILLEGAL"

DESIGNED BY:	DRAWN BY:	CHECKED BY:	REVIEWED BY:
JML	KCM	MJV	JML

PROJECT No:	DATE:	SCALE:
TRFD 2302	FEBRUARY 2025	AS SHOWN

CLIENT
THIELLS ROSEVILLE FIRE DISTRICT

NEW 26-100 FIRE HEADQUARTERS

65 W RAMAPO ROAD
GARNERVILLE, NY 10923

CONTRACT
CONTRACT M
HVAC CONSTRUCTION

STATUS
FINAL BID DOCUMENT

SHEET TITLE
HVAC
KITCHEN SCHEDULES

DRAWING No.
M 604.00

C:\Users\kmcdonald\Documents\TRFD2302_Central23-M_kmcdonaldDTNVD.rvt
2/25/2025 1:22:08 PM

EXHAUST FAN INFORMATION – JOB#7047938

FAN UNIT NO	TAG	QTY	FAN UNIT MODEL #	MANUFACTURER	CFM	ESP	RPM	MOTOR ENCL	HP	BHP	PHASE	VOLT	FLA	DISCHARGE VELOCITY	WEIGHT (LBS)	SONES
1		1	DU180HFA	CAPTIVEAIRE	1575	1.500	1154	ODP,PREMIUM	1.500	0.9160	3	208	6.6	364 FPM	178	13.7

DOAS/RTU FAN SCHEDULE – JOB#7047938

FAN INFORMATION										ELECTRICAL INFORMATION					COOLING INFORMATION										REHEAT INFORMATION					GAS HEAT INFORMATION						NOTES
FAN UNIT NO	TAG	QTY	DOAS/RTU MODEL #	MANUFACTURER	BLOWER	RETURN AIR CFM	MAX OUTSIDE AIR CFM	TOTAL CFM	WEIGHT (LBS)	ESP	HP	PHASE	VOLT	MCA	MOCP	OUTSIDE AIR		LEAVING AIR		CAPACITY			ICER	ISMRE	DISCHARGE		CAPACITY		MOISTURE REMOVAL RATE	GAS TYPE	INPUT BTUs	OUTPUT BTUs	TEMP RISE	REQUIRED INPUT GAS PRESSURE	
																DB	WB	DB	WB	DB	WB	TOTAL	SENS.		DB	WB	DESIRED	MAX							
2		1	CAS-HVAC1-1150-13-6T-DOAS	CAPTIVEAIRE	13P-1	0	1400	1400	1328	0.500	1.00	3	208	30.7A	35A	86.4°F	71.9°F	53.2°F	53.2°F	53.3°F	53.3°F	83.9 MBH	50.6 MBH	19.5	9.2	70.0°F	62.0°F	26.2 MBH	56 MBH	29.2 LBS/HR	NATURAL	131799	106757	63°F	7 IN. W.C. – 14 IN. W.C.	1,2,3,4,5,6,7,8,9,10,11,12,13,14

NOTES:
1. INVERTER SCROLL COMPRESSOR WITH INTEGRATED OIL SENSOR. DIGITAL OR STAGED SCROLL NOT AN APPROVED EQUAL
2. DIRECT DRIVE PLENUM BLOWER. BELT DRIVEN BLOWERS ARE NOT ACCEPTABLE
3. INTEGRATED MONITORING VIA CELLULAR CONNECTION BY MANUFACTURER
4. REFRIGERATION PRESSURE MONITORING ON HIGH AND LOW PRESSURE SIDE OF SYSTEM INCLUDED THROUGH DIGITAL INTERFACE
5. EC MOTOR CONDENSING FANS
6. ELECTRONIC EXPANSION VALVE. TXV NOT ACCEPTABLE
7. SUCTION LINE ACCUMULATOR
8. FACTORY COMMISSIONING WITH 5 YEAR PARTS WARRANTY, 25 YEAR WARRANTY ON STAINLESS STEEL HEAT EXCHANGER
9. AVERAGING INTAKE, EVAP AND DISCHARGE TEMPERATURE SENSORS (DISCHARGE SENSOR TO BE FACTORY MOUNTED WITHIN UNIT)
10. 81% EFFICIENT FURNACE, WITH MODULATING INDUCER TO MAINTAIN CONSTANT COMBUSTION EFFICIENCY ACROSS FIRING RANGE. 6:1 TURNDOWN WITH NG AND 5:1 TURNDOWN WITH LP
11. SUPPLY CFM MONITORING INTEGRAL TO UNIT WITH CFM MEASUREMENT INCLUDED THROUGH DIGITAL INTERFACE
12. FULLY MODULATING HOT GAS REHEAT
13. 1" EXTERIOR DUAL-WALL CONSTRUCTION W/ R-4.3 INSULATION-MINIMUM 24GA EXTERIOR W/ 18GA BASE
14. DOWN DISCHARGE/NO RETURN

FAN OPTIONS

FAN UNIT NO	TAG	QTY	DESCRIPTION
1		1	GREASE BOX
		1	FAN BASE CERAMIC SEAL – DU/DR180HFA – INSTALLED AT PLANT – FOR GREASE DUCTS
		1	2 YEAR PARTS WARRANTY
2		1	INLET PRESSURE GAUGE, 0-35"
		1	MANIFOLD PRESSURE GAUGE, 0 TO 10" WC, 1 FURNACE
		1	TOTAL CFM MONITORING
		1	INTAKE FIRESTAT SET TO 135°F
		1	FREEZESTAT
		1	DISCHARGE FIRESTAT SET TO 240°F
		1	SHIP LOOSE GAS STRAINER 3/4"
		1	SINGLE POINT ELECTRICAL CONNECTION FOR RTU. 750VA TRANSFORMER USED. IF A NON-DCV PREWIRE CONTROLS THIS UNIT, THE #28, #47, "MA", OR "E2" PREWIRE OPTION MUST BE SELECTED. DOES NOT PROVIDE SUPPLY STARTER IN PREWIRE
		1	CASLINK BUILDING MONITORING SYSTEM – INTERNET OR CELLULAR CONNECTION REQUIRED
		1	2" MERV 13 FILTERS FOR RTU1 (QTY. 4)
		1	2" MERV 8 FILTERS FOR RTU1 (QTY. 4)
		1	OVERHEAT STAT
		1	RTU1 DOWN DISCHARGE
		1	RTU FIXED 100% OA INTAKE CONTROL
		1	RTU1 CURB DUCT HANGER
		1	COMMERCIAL SMOKE DETECTOR/ALARM INTERLOCK – ALARM SUPPLIED BY OTHERS
		1	OCCUPIED SCHEDULING
		1	CLOGGED FILTER SWITCH – NOTIFICATION ON HMI
		1	RTU1 CONVENIENCE OUTLET (GFCI), 15 AMP – REQUIRES SEPARATE 120V CONNECTION. INCLUDES RECEPTACLE, COVER AND J BOX
		1	6 TON MODULATING COOLING OPTION, 208/230V. R410A REFRIGERANT, VARIABLE SPEED COMPRESSOR, ECM CONDENSING FANS
		1	6 TON MODULATING REHEAT OPTION – SPACE DEWPOINT CONTROL – R410A
		1	RTU1 NO RETURN – 100% OA
		1	VFD FACTORY MOUNTED AND WIRED IN RTU COMMERCIAL CONTROL VESTIBULE
		1	VAV PACKAGE W/ 0-10VDC INPUT CONTROL (571 VFD INCLUDED)
		1	REMOTE TEMPERATURE AND HUMIDITY SPACE SENSOR
		1	5 YEAR ENTIRE UNIT PARTS WARRANTY, 10 YEAR ENTIRE UNIT PARTS WARRANTY WITH REMOTE MONITORING AND CAPTIVEAIRE SERVICE CONTRACT, 25 YEAR STAINLESS STEEL FURNACE PARTS WARRANTY (SEE ADDITIONAL DETAILS)
		1	EXTERIOR GAS CONNECTION PROVIDED BY FACTORY WITH QUICK SEAL AND ANTI-ROTATION BRACKET

FAN ACCESSORIES

FAN UNIT NO	TAG	EXHAUST			SUPPLY			
		GREASE CUP	GRAVITY DAMPER	WALL MOUNT	SIDE DISCHARGE	GRAVITY DAMPER	MOTORIZED DAMPER	WALL MOUNT
1		YES						

CURB ASSEMBLIES

NO	ON FAN	WEIGHT	ITEM	SIZE
1	# 1	43 LBS	CURB	26.500"W X 26.500"L X 20.000"H VENTED HINGED.
2	# 2	103 LBS	CURB	41.000"W X 71.000"L X 20.000"H INSULATED.

HMI SCHEDULE

UNIT NUMBER	HMI #	HMI LOCATION	TEMP AVERAGING	MODBUS ADDRESS
FAN #2	HMI #1 – UNIT	IN UNIT	NOT AVERAGED	55
FAN #2	HMI #2 – SPACE		AVERAGED	56

FAN #1 DU180HFA – EXHAUST FAN

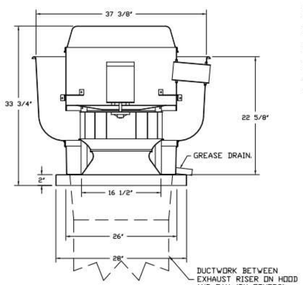

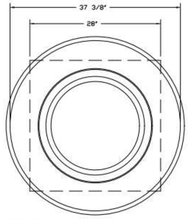

TOP VIEW

FEATURES:

- DIRECT DRIVE CONSTRUCTION (NO BELTS/PULLEYS).
- ROOF MOUNTED FANS.
- RESTAURANT MODEL.
- UL705 AND UL762 AND ULC-S645
- VARIABLE SPEED CONTROL.
- INTERNAL WIRING.
- THERMAL OVERLOAD PROTECTION (SINGLE PHASE).
- HIGH HEAT OPERATION 300°F (149°C).
- GREASE CLASSIFICATION TESTING.
- NEMA 3R SAFETY DISCONNECT SWITCH.

NORMAL TEMPERATURE TEST
EXHAUST FAN MUST OPERATE CONTINUOUSLY WHILE EXHAUSTING AIR AT 300°F (149°C) UNTIL ALL FAN PARTS HAVE REACHED THERMAL EQUILIBRIUM, AND WITHOUT ANY DETERIORATING EFFECTS TO THE FAN WHICH WOULD CAUSE UNSAFE OPERATION.

ABNORMAL FLARE-UP TEST
EXHAUST FAN MUST OPERATE CONTINUOUSLY WHILE EXHAUSTING BURNING GREASE VAPORS AT 600°F (316°C) FOR A PERIOD OF 15 MINUTES WITHOUT THE FAN BECOMING DAMAGED TO ANY EXTENT THAT COULD CAUSE AN UNSAFE CONDITION.

OPTIONS

- GREASE BOX.
- FAN BASE CERAMIC SEAL – DU/DR180HFA – INSTALLED AT PLANT – FOR GREASE DUCTS.
- 2 YEAR PARTS WARRANTY.

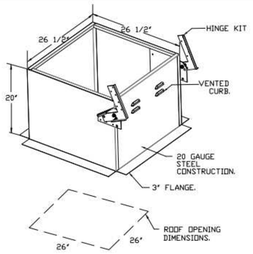

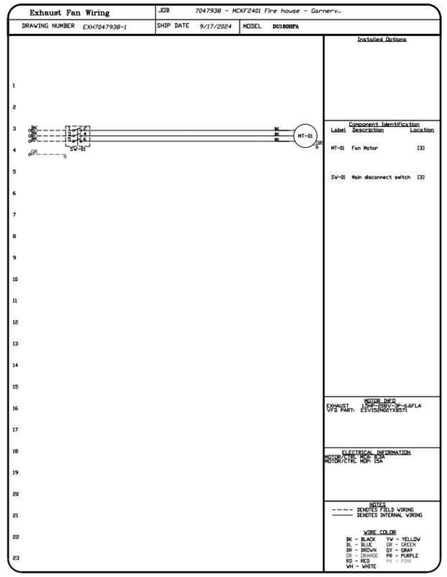

REVISIONS

DESCRIPTION	DATE

CAPTIVEAIRE
NYC Office
254 West 31st St, 4PT 17L, New York, NY 10019 PHONE: (646) 723 - 3365 FAX: 6464034230 EMAIL: reg17@captiveaire.com
www.captiveaire.com

MCKF2401 Fire house - Garnerville NY
65 West Ramapo Road,
Thiells, NY, 10923

DATE: 9/17/2024
DWG.#: 7047938
DRAWN BY: Mark Evans
SCALE: 3/4" = 1'-0"
MASTER DRAWING
SHEET NO. 2

H2M architects + engineers
538 Broad Hollow Road, 4th Floor East
Melville, NY 11747
631.756.8000 • www.h2m.com
NY Architecture & Landscape Architecture: No Certificate Required
NY Engineering Certificate of Authorization No.: 0018178

CONSULTANTS:

MARK	DATE	DESCRIPTION

STATE OF NEW YORK · JOHN M. LAHEY · 101303 · LICENSED PROFESSIONAL ENGINEER

JOHN M. LAHEY, P.E.
NY PROFESSIONAL ENGINEER Lic. No. 101303
Exp. Date

"IN ACCORDANCE WITH ARTICLE 145, SECTION 7209 OF THE NYS EDUCATION LAW, ALTERATION OF THIS DOCUMENT EXCEPT BY A LICENSED PROFESSIONAL IS ILLEGAL"

DESIGNED BY:	DRAWN BY:	CHECKED BY:	REVIEWED BY:
JML	KCM	MJV	JML

PROJECT No:	DATE:	SCALE:
TRFD 2302	FEBRUARY 2025	AS SHOWN

CLIENT
THIELLS ROSEVILLE FIRE DISTRICT

NEW 26-100 FIRE HEADQUARTERS

THIELLS 26 FD

65 W RAMAPO ROAD
GARNERVILLE, NY 10923

CONTRACT
CONTRACT M
HVAC CONSTRUCTION

STATUS
FINAL BID DOCUMENT

SHEET TITLE
HVAC
KITCHEN SCHEDULES

DRAWING No.
M 605.00

C:\Users\kmcdonald\Documents\TRFD2302_Central23-M_kmcdonaldDTNVD.rvt

2/25/2025 1:22:09 PM

ELECTRICAL LEGEND

SYMBOL	DESCRIPTION	COMMENTS
S_3	THREE - WAY SWITCH	46" AFF TO CL UON
S_4	FOUR - WAY SWITCH	46" AFF TO CL UON
S_I	ILLUMINATED SWITCH	46" AFF TO CL UON
S^A	SINGLE POLE SWITCH; "A" INDICATES SWITCH CONTROL	46" AFF TO CL UON
S_D	SINGLE POLE DIMMER SWITCH	46" AFF TO CL UON
S_{3D}	THREE - WAY DIMMER SWITCH	46" AFF TO CL UON
S_K	SINGLE POLE KEYED SWITCH	46" AFF TO CL UON
S_{K3}	KEYED THREE - WAY SWITCH	46" AFF TO CL UON
S_{K4}	KEYED FOUR - WAY SWITCH	46" AFF TO CL UON
S_M	HORSEPOWER RATED SWITCH, WITH INDICATOR (CONTRACTOR SHALL COORDINATE VOLTAGE AND PHASE WITH EQUIPMENT)	46" AFF
S_P	SWITCH AND PILOT LIGHT	
S_T	SWITCH WITH THERMAL OVERLOAD PROTECTION (CONTRACTOR SHALL COORDINATE VOLTAGE AND PHASE WITH EQUIPMENT)	
S_{OS}	OCCUPANCY SENSOR WITH MANUAL OVERRIDE, WALL MOUNT	
TC	TIME CLOCK	
PC	PHOTOCELL	
PB	PUSH BUTTON	
E,G	EMERGENCY SHUT OFF SWITCH; 'E' INDICATES ELECTRICAL; 'G' INDICATES GAS	
OS	OCCUPANCY SENSOR, CEILING MOUNT	
	OCCUPANCY SENSOR POWER PACK, MOUNTED ABOVE CEILING	
	2 #12 AWG + #12 AWG GND IN 3/4" E.C. CONCEALED IN WALL OR CEILING	
	5 #12 AWG + #12 AWG GND IN 3/4" E.C. CONCEALED IN WALL OR CEILING	
	3 #12 AWG + #12 AWG GND IN 3/4" E.C. CONCEALED IN OR BELOW SLAB	
LP1-35	DEDICATED HOME RUN TO PANEL LP1 FOR CIRCUIT No. 35 ONLY. 2 #12 AWG + #12 AWG GND IN 3/4" E.C. CONCEALED IN WALL OR CEILING	
	SIMPLEX RECEPTACLE: 120V, 20A. COORDINATE MOUNTING HEIGHT WITH MECHANICAL CONTRACTOR TO CLEAR BASEBOARDS.	FLUSH
	DUPLEX RECEPTACLE: 120V, 20A. COORDINATE MOUNTING HEIGHT WITH MECHANICAL CONTRACTOR TO CLEAR BASEBOARDS.	FLUSH
	QUAD RECEPTACLE, DOUBLE DUPLEX RECEPTACLE: 120V, 20A. COORDINATE MOUNTING HEIGHT WITH MECHANICAL CONTRACTOR TO CLEAR BASEBOARDS.	FLUSH
C	DUPLEX RECEPTACLE: 120V, 20A; SUBSCRIPT "C" INDICATES CEILING MOUNT.	FLUSH
	DUPLEX RECEPTACLE: 120V, 20A; FLOOR MOUNTED.	FLUSH
IG	ISOLATED GROUND DUPLEX RECEPTACLE. COORDINATE MOUNTING HEIGHT WITH MECHANICAL CONTRACTOR TO CLEAR BASEBOARDS.	FLUSH
GFI	DUPLEX RECEPTACLE: 120V, 20A; WITH GROUND FAULT INDICATOR. COORDINATE MOUNTING HEIGHT WITH MECHANICAL CONTRACTOR TO CLEAR BASEBOARDS.	FLUSH
UC	DUPLEX RECEPTACLE: 120V, 20A; SUBSCRIPT "UC" INDICATES UNDER COUNTER	AS PER ENGINEER
CT	DUPLEX RECEPTACLE: 120V, 20A; SUBSCRIPT "CT" INDICATES COUNTER TOP.	AS PER ENGINEER
WP	DUPLEX RECEPTACLE: 120V, 20A; SUBSCRIPT "WP" INDICATED WEATHER PROOF	AS PER ENGINEER
40 240	SPECIAL PURPOSE OUTLET: 240V, 40A. VERIFY NEMA CONFIGURATION WITH EQUIPMENT MANUFACTURER.	AS PER ENGINEER
TL	TWISTED LOCK RECEPTACLE: 125V, 20A, 3 WIRE; UNLESS OTHERWISE NOTED.	AS PER ENGINEER
	SURFACE RACEWAY WITH 2 GROUNDED AND ISOLATED TYPE DUPLEX RECEPTACLES AND 1 DATA OUTLET PER POSITION, 18" AFF UNLESS OTHERWISE NOTED.	
	TELEPHONE/POWER POLE	
S_{S1}	MAGNETIC STARTER "S1"; SEE STARTER SCHEDULE	
DS_{DS1}	DISCONNECTION SWITCH "DS1"; SEE DISCONNECT SWITCH SCHEDULE.	
J	JUNCTION BOX	
J_{4X}	NEMA 4X STAINLESS STEEL JUNCTION BOX WITH GASKET COVER.	
J_S	JUNCTION BOX RECESSED IN WALL WITH BLANK COVER, PROVIDE 3/4" E.C. AND DRAG LINE TO ABOVE FINISHED CEILING. MOUNT 18" AFF, UNLESS OTHERWISE NOTED.	
J_{CAM}	FOR MONITOR, JUNCTION BOX RECESSED IN WALL WITH BLANK COVER. PROVIDE CAT6 CABLE IN 3/4" E.C. TO ABOVE FINISHED CEILING. CAT6 TO TERMINATE IN IT ROOM. PROVIDE 10' SLACK.	
J_{AP}	OUTDOOR WIRELESS ACCESS POINT J-BOX. JUNCTION BOX RECESSED IN WALL WITH BLANK COVER. PROVIDE CAT6 CABLE IN 3/4" E.C. TO ABOVE FINISHED CEILING. CAT6 TO TERMINATE IN IT ROOM. PROVIDE 10' SLACK.	
T_{T1}	TRANSFORMER "T1"; SEE TRANSFORMER SCHEDULE.	
	ELECTRICAL PANEL "P1", RECESSED; SEE PANEL SCHEDULE.	
P1	ELECTRICAL PANEL "P1", SURFACE MOUNT; SEE PANEL SCHEDULE.	
	CONDUIT GOING UP.	
	CONDUIT GOING DOWN.	
	PULLBOX	
T	TELEPHONE. PROVIDE 3/4" E.C. WITH DRAG LINE TO AFC AND EMPTY J. BOX RECESSED IN WALL WITH BLANK COVER.	
TV	CABLE TELEVISION. PROVIDE RG6 COAX CABLE IN 1" E.C. TO AFC AND EMPTY J. BOX RECESSED IN WALL WITH BLANK COVER. RG6 COAX CABLE TO TERMINATE IN .I.T ROOM. PROVIDE 10' SLACK.	
D	DATA. PROVIDE 3/4" E.C. WITH CAT6 CABLE TO AFC AND J. BOX RECESSED IN WALL WITH RJ-45 OUTLET. CAT6 CABLE TO TERMINATE IN I.T. ROOM. PROVIDE 10' SLACK .	
D/TV	COMBINED DATA AND TV. PROVIDE 1" E.C. WITH CAT6 CABLE + RG6 COAX CABLE TO AFC AND EMPTY J. BOX RECESSED IN WALL WITH BLANK COVER. CAT6 CABLE AND RG6 COAX CABLE TO TERMINATE IN I.T. ROOM. PROVIDE 10' SLACK .	
S	SECURITY CAMERA. PROVIDE 3/4" E.C. WITH CAT6 CABLE TO AFC AND EMPTY J. BOX RECESSED IN WALL WITH BLANK COVER. CAT6 TO TERMINATE IN I.T. ROOM. PROVIDE 10' SLACK	
SP	SIGN-IN PANEL. PROVIDE 3/4" E.C. WITH CAT6 CABLE TO AFC AND EMPTY J. BOX RECESSED IN WALL WITH BLANK COVER. CAT6 TO TERMINATE IN I.T. ROOM. PROVIDE 10' SLACK	
DB	DASHBOARD PANEL. PROVIDE 3/4" E.C. WITH CAT6 CABLE TO AFC AND EMPTY J. BOX RECESSED IN WALL WITH BLANK COVER. CAT6 TO TERMINATE IN I.T. ROOM. PROVIDE 10' SLACK	
AP	CEILING MOUNTED WIRELESS ACCESS POINT J-BOX. JUNCTION BOX RECESSED ON CEILING WITH BLANK COVER. PROVIDE CAT6 CABLE TO I.T. ROOM. PROVIDE 10' SLACK.	
SP	CEILING MOUNTED SPEAKER J-BOX. JUNCTION BOX RECESSED ON CEILING WITH BLANK COVER. PROVIDE 14/2 SPEAKER CABLE TO I.T. ROOM. PROVIDE 10' SLACK.	
INT	INTERCOM J-BOX. JUNCTION BOX RECESSED IN WALL WITH BLANK COVER. PROVIDE CAT6 + 18/4 CABLE IN 1" E.C. TO ABOVE FINISHED CEILING. CAT6 AND 18/4 CABLE TO TERMINATE IN IT ROOM. PROVIDE 10' SLACK.	
PR	CEILING MOUNTED PROJECTOR J-BOX. JUNCTION BOX RECESSED ON CEILING WITH BLANK COVER. PROVIDE (3) CAT6 CABLE TO I.T. ROOM. PROVIDE 10' SLACK.	
MS	CEILING MOUNTED MOTORIZED SCREEN J-BOX. JUNCTION BOX RECESSED ON CEILING WITH BLANK COVER. PROVIDE 22/4 CABLETO PROJECTION JUNCTION BOX. PROVIDE 5' SLACK.	

ABBREVIATION	DESCRIPTION
AFF	ABOVE FINISH FLOOR
AFC	ABOVE FINISH CEILING
AFG	ABOVE FINISH GRADE
AMP, A	AMPERE
ATS	AUTOMATIC TRANSFER SWITCH; SEE TRANSFER SWITCH SCHEDULE
AWG	AMERICAN WIRE GUAGE
BFC	BELOW FINISHED CEILING
CL	CENTERLINE
CT	COUNTERTOP
EC	ELECTRICAL CONDUIT
GFCI	GROUND FAULT CIRCUIT INTERRUPTER
GFI	GROUND FAULT INDICATOR
PSEG	PUBLIC SERVICE ELECTRIC AND GAS COMPANY (LOCAL ELECTRIC UTILITY)
MCB	MAIN CIRCUIT BREAKER
MLO	MAIN LUGS ONLY
NTS	NOT TO SCALE
UON	UNLESS OTHERWISE NOTED
UC	UNDERCOUNTER
V	VOLTS
VAC	VOLTS ALTERNATING CURRENT
VDC	VOLT DIRECT CURRENT
X-FMR	TRANSFORMER
WP	WEATHERPROOF

SECURITY DEVICE LEGEND

SYMBOL	DESCRIPTION	COMMENTS
J DC	DOOR CONTACT. PROVIDE 3/4" E.C. WITH DRAG LINE AND EMPTY JUNCTION BOX RECESSED IN WALL/CEILING WITH BLANK COVER.	ABOVE DOOR
J DS	DOOR SWIPE. PROVIDE 3/4" E.C. WITH DRAG LINE AND EMPTY JUNCTION BOX RECESSED IN WALL/CEILING WITH BLANK COVER.	3'-10" A.F.F.
J CAM	SECURITY CAMERA. PROVIDE 3/4" E.C. WITH DRAG LINE AND EMPTY JUNCTION BOX RECESSED IN WALL/CEILING WITH BLANK COVER.	8'-0" A.F.F.

SECUIRTY NOTE:

1. **PRIOR TO INSTALLATION OF JUNCTION BOXES, CONDUIT, AND ACCESSORIES, CONTRACTOR SHALL COODINATE WITH SECURITY VENDOR FOR EXACT LOCATIONS AND MOUNTING HEIGHTS.**

SYMBOL	DESCRIPTION	COMMENTS
T	LINE VOLTAGE THERMOSTAT, 120V, 10A.	
	CIRCUIT BREAKER WITH TRIP AND POLES AS NOTED.	
TS1	TRANSFER SWITCH TS1; SEE TRANSFER SWITCH SCHEDULE.	
M.C.B 30A/2P PANEL "P1"	DISTRIBUTION PANEL P1 WITH 30A, 2 POLE M.C.B.; SEE DISTRIBUTION PANEL SCHEDULE.	
	DISCONNECT SWITCH DS1, 100A, 3 POLES; SEE DISCONNECT SWITCH SCHEDULE.	
DS3 100A/3P	FUSED DISCONNECT SWITCH DS2, FUSED AT 40A, 3 POLES; SEE DISCONNECT SWITCH SCHEDULE.	
G1	GENERATOR SET G1	
M	ELECTRIC METER AND METER PAN AS PER PSEG REQUIREMENTS.	
5	MOTOR, NUMBER INDICATED HORSEPOWER.	
	CURRENT TRANSFORMER.	
PTS	VOLTAGE TRANSFORMER.	
T2	TRANSFORMER WITH SIZE, PRIMARY AND SECONDARY VOLTAGES AS NOTED.	
RVRM 10	REDUCED VOLTAGE SOLID STATE RAMPING MODULE, SIZED FOR 10 H.P.	
RVSS 150	REDUCED VOLTAGE SOLID STATE STARTER, SIZED FOR 150 H.P.	
VFD 25	VARIABLE FREQUENCY DRIVE, RATED FOR 25 H.P.	
FVNR 5	FULL VOLTAGE NON-REVERSING STARTER, NEMA SIZE 6	
FVR 5	FULL VOLTAGE REVERSING STARTER, NEMA SIZE 5	
JJS	FAST ACTING SOLID STATE FUSES AS PER MANUFACTURER.	
	MULTIPLE BRANCH CIRCUITS AS REQUIRED.	
LNR	5% LINE REACTOR, UNLESS OTHERWISE NOTED	
— — — —	CONTROL CIRCUIT; MIN 2 #12 AWG IN 3/4" E.C. UNLESS OTHERWISE NOTED ON PLANS	

SYMBOLS LEGEND

100	ROOM DESIGNATION
S A2.2	BUILDING SECTION CUT
S A2.2	WALL SECTION CUT
S A2.2	DETAIL KEY
S A2.2	ELEVATION KEY
H	COLUMN GRID
	ELEVATION LINE
1 Title SCALE:	DRAWING TITLE
4 3 S A2.2 1 2	INTERIOR ELEVATION REFERENCE
# #	SEE NOTE # ON DWG #

H2M architects + engineers

538 Broad Hollow Road, 4th Floor East
Melville, NY 11747
631.756.8000 • www.h2m.com
NY Architecture & Landscape Architecture: No Certificate Required
NY Engineering Certificate of Authorization No.: 0018178

CONSULTANTS:

MARK	DATE	DESCRIPTION

STATE OF NEW YORK · CHARLES J. STARKE · 093857 · LICENSED PROFESSIONAL ENGINEER

7/31/2025
Exp. Date

CHARLIE J. STARKE, P.E.
NY PROFESSIONAL ENGINEER Lic. No. 093857

"IN ACCORDANCE WITH ARTICLE 145, SECTION 7209 OF THE NYS EDUCATION LAW, ALTERATION OF THIS DOCUMENT EXCEPT BY A LICENSED PROFESSIONAL IS ILLEGAL"

DESIGNED BY:	DRAWN BY:	CHECKED BY:	REVIEWED BY:
VLV/INP	INP	VLV	CJS

PROJECT No:	DATE:	SCALE:
TRFD 2302	FEBRUARY 2025	AS SHOWN

CLIENT

THIELLS ROSEVILLE FIRE DISTRICT

NEW 26-100 FIRE HEADQUARTERS

65 W RAMAPO ROAD GARNERVILLE, NY 10923

CONTRACT

CONTRACT E ELECTRICAL CONSTRUCTION

STATUS

FINAL BID DOCUMENT

SHEET TITLE

ELECTRICAL LEGENDS

DRAWING No.

E 001.00

C:\Users\jhussain\Documents\TRFD2302_Central23-M_JhussainEBT65.rvt
2/25/2025 1:59:52 PM

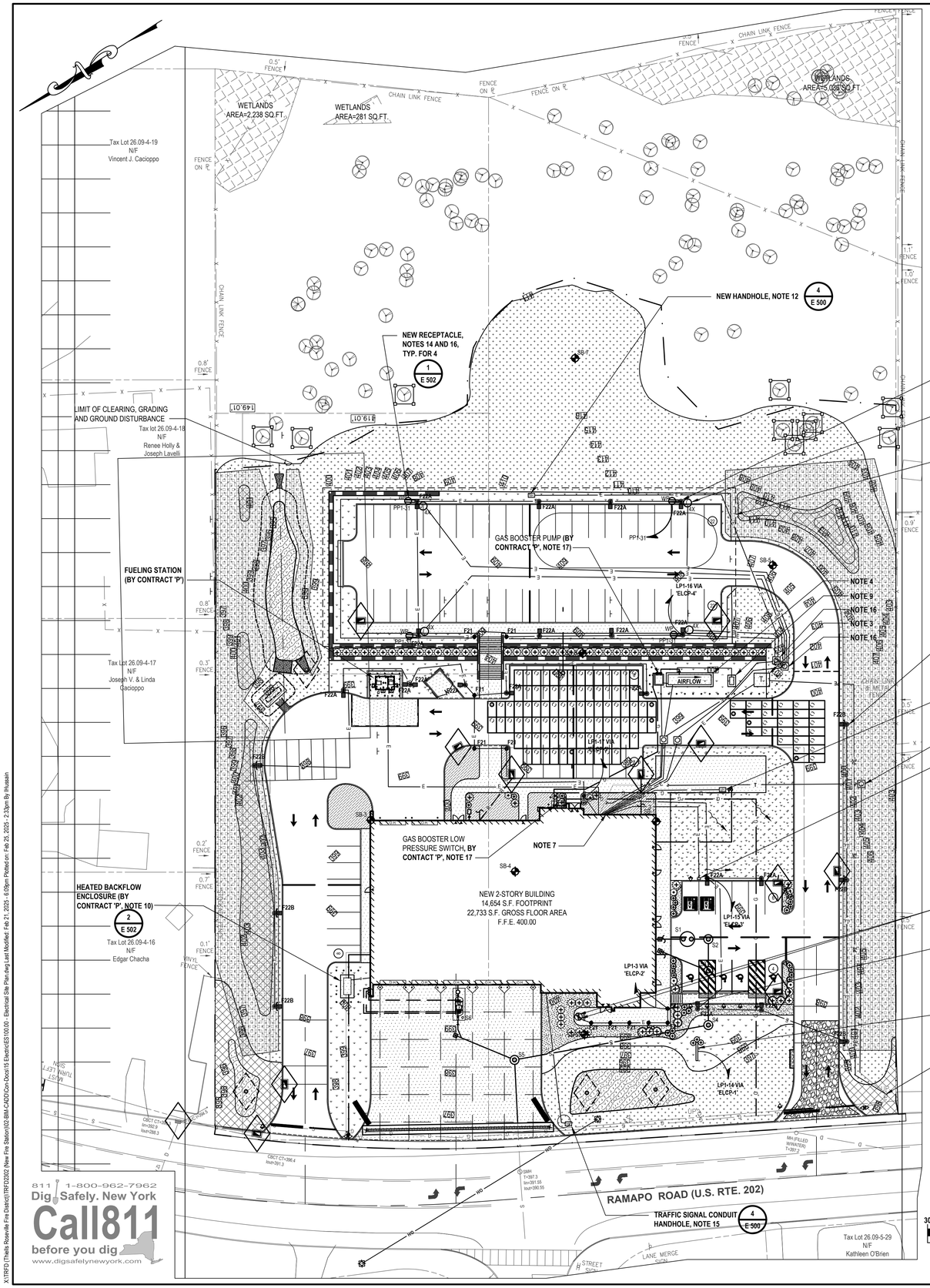

ELECTRICAL SITE PLAN GENERAL NOTES:

G1. CONTRACTOR SHALL INSPECT CONSTRUCTION SITE PRIOR TO SUBMISSION OF BIDS AND SHALL MAKE NO ADDITIONAL CLAIMS REGARDING SITE CONDITIONS THEREAFTER.

G2. LOCATION OF ALL UNDERGROUND UTILITIES BOTH PUBLIC AND CUSTOMER OWNED, WERE OBTAINED FROM EITHER MAPS, SURVEYS, DRAWINGS AND RECORDS SUPPLIED BY OTHERS. THE OWNER AND ENGINEER DO NOT GUARANTEE OR ACCEPT RESPONSIBILITY FOR ANY DAMAGE TO SUCH FACILITIES DUE TO DISCREPANCIES IN LOCATION AND SIZE SHOWN ON THE PLANS OR THOSE UTILITIES NOT SHOWN. THE CONTRACTOR IS RESPONSIBLE FOR OBTAINING A PRIVATE MARKOUT COMPANY FOR DETERMINING THE LOCATION OF ALL UNDERGROUND UTILITIES PRIOR TO BEGINNING WORK. CONTRACTOR SHALL LOCATE ALL UTILITIES WITHIN PROXIMITY OF CONSTRUCTION LIMITS.

G3. CONTRACTOR SHALL COMPLETELY RESTORE ALL AREAS DISTURBED DURING CONSTRUCTION, INCLUDING BUT NOT LIMITED TO GRASS AREAS, LANDSCAPING, PAVEMENTS, SIDEWALKS, CURBING AND IN-GROUND SPRINKLER SYSTEMS.

G4. THE CONTRACTOR SHALL PERFORM DAILY CLEAN-UP OPERATIONS WHICH INCLUDE REMOVAL OF DEBRIS AND EXCESS CONSTRUCTION MATERIAL TO THE SATISFACTION OF THE OWNER AND THE ENGINEER.

G5. DURING ALL NON-WORKING HOURS, THE CONTRACTOR WILL BE REQUIRED TO STORE ALL EQUIPMENT AND MATERIALS WITHIN THE AREA DESIGNATED BY THE ENGINEER AT THE PROJECT SITE.

G6. PROVIDE TEMPORARY FENCING TO PROTECT WORK AREAS.

LEGEND

DESCRIPTION	SYMBOL
UTILITY POWER/TELEPHONE POLE	
ELECTRIC PULL BOX	
HANDHOLE	HH
TRANSFORMER	T
LIGHT POLE W/FIXTURE	
EXISTING NATURAL GAS SERVICE	NG
EXISTING SEWER SERVICE	S
EXISTING WATER SERVICE	W
EXISTING TELEPHONE SERVICE	T
NEW OVERHEAD TELEPHONE SERVICE	OHT
NEW TELEPHONE SERVICE	T
NEW UNDERGROUND TELEPHONE SERVICE	UT
EXISTING CABLE LINE	C
NEW CABLE LINE	C
NEW FIBER OPTIC LINE	FO
NEW CLOSE CIRCUIT TV LINE	CCTV
NEW SITE LIGHTING LINES	SL
EXISTING PRIMARY ELECTRIC SERVICE	PE
NEW PRIMARY ELECTRIC SERVICE	PE
NEW OVERHEAD PRIMARY ELECTRIC SERVICE	OHP
EXISTING OVERHEAD LINES	OH
NEW ELECTRICAL LINE	E
NEW OVERHEAD ELECTRICAL LINE	OHE
NEW ELECTRIC CONDUIT LINE	EC
NEW UNDERGROUND DUCKTBANK	UD

ELECTRICAL SITE PLAN KEY NOTES:

1. NEW ELECTRIC SERVICE RISER AS PER UTILITY REQUIREMENTS.
2. NEW TELECOMMUNICATIONS SERVICE RISER AS PER UTILITY REQUIREMENTS.
3. NEW TRANSFORMER PAD / PULL BOX AS PER UTILITY REQUIREMENTS.
4. NEW GENERATOR AND CONCRETE FOUNDATION.
5. NEW PULL BOX. SITE PLAN SHOWS MINIMUM REQUIRED PULL BOXES. PROVIDE ADDITIONAL PULL BOXES AS REQUIRED BY NEC AND UTILITY REQUIREMENTS.
6. NOT USED.
7. CONTRACTOR SHALL STUB ALL CONDUITS INTO BUILDINGS BELOW GRADE. NO EXTERIOR CONDUITS PERMITTED TO RUN EXPOSED ON EXTERIOR WALLS. LINK SEALS ON EXTERIOR OF CONDUITS AND DUCT SEAL ON INTERIOR CONDUIT .
8. CONTRACTOR SHALL COORDINATE WITH IN-GROUND FLAG POLE LIGHTING FIXTURES FOR EXACT PLACEMENT AND SPACING REQUIREMENT FROM THE FLAG POLE.
9. NEW PAD MOUNTED LOADBANK.
10. CONTRACTOR SHALL PROVIDE A 30A/1P CIRCUIT IN PANEL PP1B (CKT #30) AND A 30A FEED (2 #10 AWG + #10 AWG GND IN 3/4") TO POWER BACKFLOW ENCLOSURE 2000W HEATER, ALARM PANEL, AND MAINTENANCE RECEPTACLE. CONTRACTOR SHALL PROVIDE A JUNCTION BOX INSIDE THE RPZ ENCLOSURE AND WIRE ALARM PANEL, RECEPTACLE, HEATER, ALARM LIGHT, AND ALARM HORN PROVIDED BY CONTRACT 'P'. CONTRACTOR SHALL FIELD VERIFY AND COORDINATE WITH ENCLOSURE INSTALLER FOR EXACT LOCATION OF ENCLOSURE HEATER AND ALARM LIGHT AND HORN. REFER TO PLUMBING SHEET FOR RPZ ENCLOSURE DETAIL AND LOCATION OF ALARM LIGHT AND HORN.
11. ELECTRICAL ALTERNATE E-05: CONTRACTOR SHALL PROVIDE A JUNCTION BOX NEAR THE BASE OF THE LIGHT POLE FOR FUTURE CCTV CAMERA. CONTRACTOR SHALL PROVIDE A 1" EMPTY CONDUIT WITH DRAG LINE FROM THE JUNCTION BOX TO A JUNCTION BOX IN THE UTILITY ROOM. CONTRACTOR SHALL COORDINATE WITH ARCHITECT AND OWNER'S CCTV INSTALLER FOR EXACT MOUNTING LOCATION AND HEIGHT OF CCTV JUNCTION BOX AT LIGHT POLE AND UTILITY ROOM.
12. CONTRACTOR SHALL PROVIDE A NEW HANDHOLE AT THE BACK OF THE PARKING LOT AT LOCATION INDICATED FOR FUTURE CIRCUITS. CONTRACTOR SHALL PROVIDE (2) 1" EMPTY CONDUIT WITH DRAG LINE BACK TO A JUNCTION BOX IN THE UTILITY ROOM. COORDINATE WITH ARCHITECT AND OWNER FOR EXACT LOCATION OF NEW HANDHOLE.
13. CONTRACTOR SHALL PROVIDE A NEW HANDHOLE AT THE FUTURE PAVILION AREA FOR FUTURE CIRCUITS. CONTRACTOR SHALL PROVIDE (2) SETS 2 #12 AWG + #12 AWG GND IN (2) 3/4" E.C. BACK TO PANEL PP1 IN THE UTILITY ROOM. CONTRACTOR SHALL PROVIDE (2) 20A/1P CIRCUIT BREAKERS (SWITCHED OFF) IN PANEL PP1 AND PROVIDE LABEL FOR THE CIRCUIT BREAKERS. CONTRACTOR SHALL PROVIDE 10' WIRE SLACK AND CAP WIRE WITH WIRE NUTS FOR FUTURE USE. COORDINATE WITH ARCHITECT AND OWNER FOR EXACT LOCATION OF NEW HANDHOLE.
14. CONTRACTOR SHALL PROVIDE NEW RECEPTACLE WITH WEATHERPROOF ENCLOSURE AND COVER AT THE BASE OF THE POLE. CONTRACTOR SHALL COORDINATE WITH OWNER FOR EXACT MOUNTING HEIGHT OF THE RECEPTACLE. RECEPTACLE SHALL BE PART OF ELECTRICAL ALTERNATE E-05.
15. CONTRACTOR SHALL PROVIDE A NEW HANDHOLE FOR FUTURE TRAFFIC SIGNAL TIE-IN. CONTRACTOR SHALL PROVIDE A 2" EMPTY CONDUIT WITH DRAG LINE FROM THE HANDHOLE TO A JUNCTION BOX IN THE RADIO ROOM.
16. ELECTRICAL ALTERNATE E-05: ALL ELECTRICAL WORK IN THE UPPER PARKING LOT SHALL BE PART OF THIS ALTERNATE. CONTRACTOR SHALL PROVIDE DEDUCT ALTERNATE PRICING TO NOT INCLUDE LIGHTING FIXTURES, BOLLARDS, LIGHT POLES, LIGHT POLE BASES, RECEPTACLES, AND FUTURE CAMERA JUNCTION BOXES. BASE BID SCOPE SHALL INCLUDE UNDERGROUND CONDUIT FOR FUTURE TIE-IN TERMINATED IN PULLBOXES.
17. ELECTRICAL ALTERNATE E-06: ALL ELECTRICAL WORK AND COMPONENTS ASSOCIATED WITH THE INSTALLATION OF THE GAS BOOSTER PUMP INCLUDING WIRING AND CONDUIT (3 #12 AWG + #12 AWG GND IN 3/4" E.C.). CONTRACTOR SHALL INTERFACE THE LOW PRESSURE SWITCH BY THE GAS METER AND THE GENERATOR CONTROL PANEL WITH THE GAS BOOSTER CONTROL PANEL. CONTRACTOR SHALL PROVIDE ALL REQUIRED WIRING (2 #12 AWG + #12 AWG GND IN 3/4" E.C.). CONTRACTOR SHALL REFER TO PLUMBING SHEETS FOR ADDITIONAL DETAILS AND COORDINATE WITH CONTRACT 'P'.
18. ELECTRICAL ALTERNATE E-02: ALL ELECTRICAL WORK AND COMPONENTS ASSOCIATED WITH THE THE PROCUREMENT AND INSTALLATION OF FREE STANDING ELECTRIC VEHICLE CHARGING STATION (CHARGE POINT MODEL:CP600 AC DUAL PORT, 80 AMP) OR APPROVED EQUAL AS INDICATED IN THE CONTRACT DRAWINGS AND SPECIFICATIONS. ALL REQUIRED COMPONENTS INCLUDING ALL WIRING AND CONDUIT TO PROVIDE AN OPERATING CHARGING SYSTEM SHALL BE INCLUDED IN THE ALTERNATE PRICE. CONTRACTOR SHALL INCLUDE CAT-6 CABLE IN 3/4" E.C. FROM THE CHARGING STATION TO A JUNCTION BOX I.T. ROOM WITH 20' SLACK IN THE ALTERNATE PRICE.

H2M architects + engineers
538 Broad Hollow Road, 4th Floor East
Melville, NY 11747
631.756.8000 • www.h2m.com
NY Architecture & Landscape Architecture: No Certificate Required
NY Engineering Certificate of Authorization No. 0018178

CONSULTANTS:

MARK	DATE	DESCRIPTION

STATE OF NEW YORK · CHARLES J. STARKE · 093837 · LICENSED PROFESSIONAL ENGINEER

7/31/2025
EXP. DATE

CHARLIE J. STARKE, P.E.
NY PROFESSIONAL ENGINEER Lic. No: 093837

"IN ACCORDANCE WITH ARTICLE 145, SECTION 7209 OF THE NYS EDUCATION LAW, ALTERATION OF THIS DOCUMENT EXCEPT BY LICENSE PROFESSIONAL IS ILLEGAL"

DESIGNED BY:	DRAWN BY:	CHECKED BY:	REVIEWED BY:
VLV/INP	INP	VLV	CJS

PROJECT No.:	DATE:	SCALE:
TRFD 2302	FEBRUARY 2025	AS SHOWN

CLIENT

THIELLS ROSEVILLE FIRE DISTRICT

NEW 26-100 FIRE HEADQUARTERS

THIELLS 26 FD

65 W RAMAPO RD
GARNERVILLE, NY 10923

CONTRACT

CONTRACT E
ELECTRICAL CONSTRUCTION

STATUS

SHEET TITLE

ELECTRICAL SITE PLAN

DRAWING No.

ES 100.00

X:\TRFD\Thiells Roseville Fire District\TRFD2302 (New Fire Station)\02-BIM-CAD\Con-Docs\15 Electric\ES100100 - Electrical Site Plan.dwg Last Modified: Feb 21, 2025 - 6:06pm Plotted on: Feb 25, 2025 - 2:33pm By ihussain

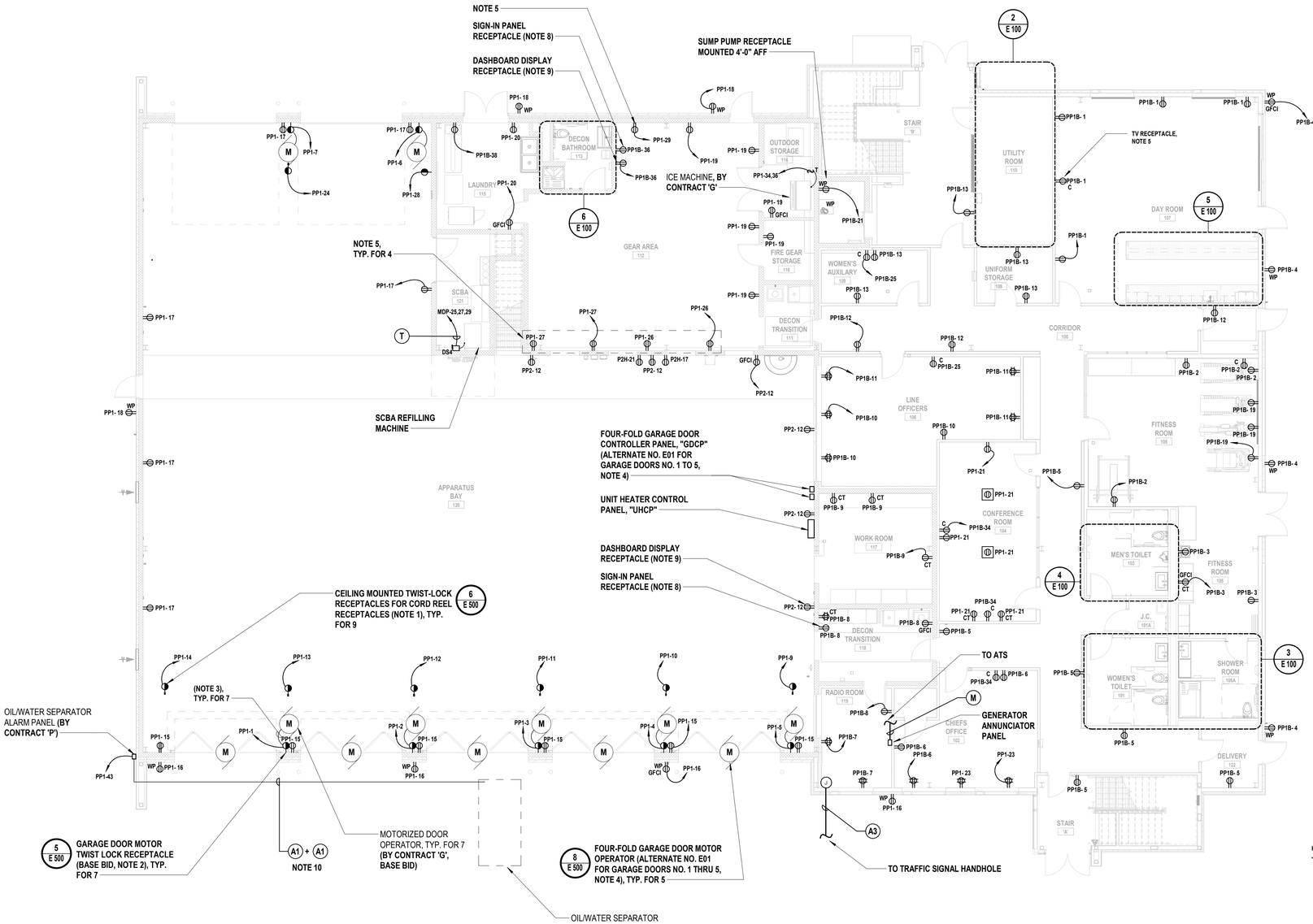

1 Electrical First Floor Plan

SCALE: 1/8" = 1'-0"

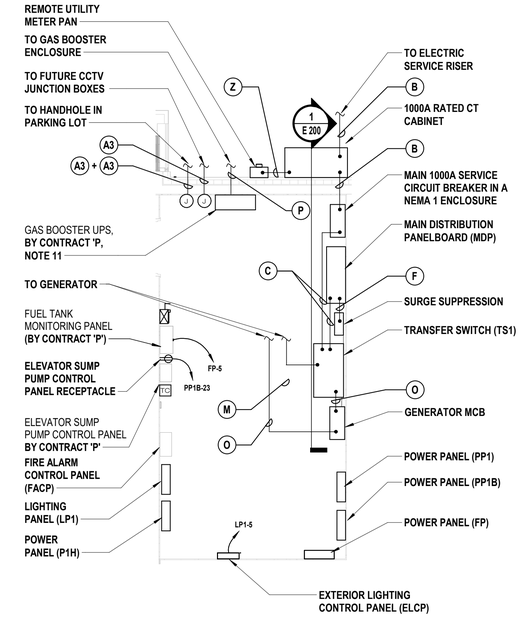

2 Enlarged Utility Room Power Plan

SCALE: 1/4" = 1'-0"

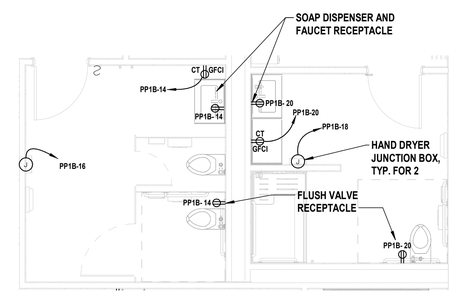

3 Enlarged Shower Room/Women's Toilet

SCALE: 1/4" = 1'-0"

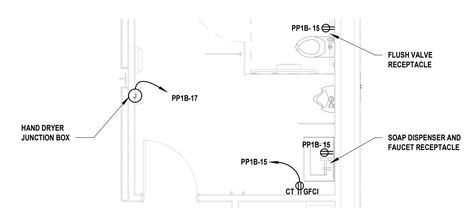

4 Enlarged Men's Toilet

SCALE: 1/4" = 1'-0"

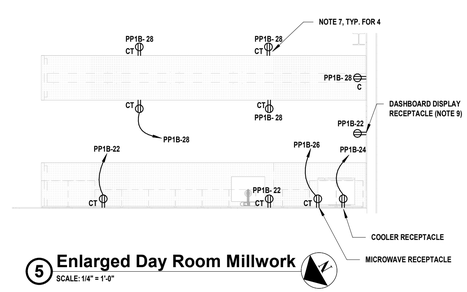

5 Enlarged Day Room Millwork

SCALE: 1/4" = 1'-0"

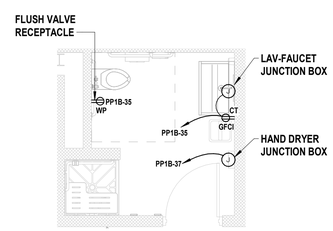

6 Enlarged Decon Bathroom Power Plan

SCALE: 1/4" = 1'-0"

ELECTRICAL POWER NOTES:

1. COORDINATE EXACT RECEPTACLE CONFIGURATION WITH MANUFACTURER'S REQUIREMENTS.
2. COORDINATE EXACT MOUNTING HEIGHT AND LOCATION WITH GENERAL CONTRACTOR.
3. REMOVE FACTORY GARAGE DOOR MOTOR PLUG-END AND REPLACE WITH NEW "SO" CORD AND TWIST-LOCK PLUG TO MATCH TWIST-LOCK RECEPTACLE.
4. ALTERNATE NO. E01: FOUR-FOLD GARAGE DOOR FOR BAY DOORS NO. 1 THRU 5. CONTRACTOR SHALL PROVIDE A 40A/1P CIRCUIT BREAKER WITH 2 #8 AWG + #10 AWG GND IN 1" E.C. FEEDER FOR THE GARAGE DOOR CONTROL PANEL, "GDCP". CONTRACTOR SHALL PROVIDE AND INSTALL POWER AND CONTROL WIRING FOR MOTOR OPERATOR AND AUXILIARY DEVICES FROM "GDCP" IN ACCORDANCE WITH THE MANUFACTURER'S REQUIREMENT.
5. MOUNT GEAR RACK RECEPTACLE 7'-0" A.F.F. COORDINATE WITH OWNER AND ARCHITECT FOR EXACT LOCATION.
6. MOUNT TV RECEPTACLE 12" BELOW FINISH CEILING. COORDINATE WITH ARCHITECT AND OWNER FOR EXACT LOCATION.
7. COORDINATE WITH ARCHITECT AND CABINET INSTALLER FOR EXACT LOCATION AND MOUNTING HEIGHT OF RECEPTACLE.
8. CONTRACTOR SHALL COORDINATE WITH OWNER AND OWNER'S SIGN-IN PANEL INSTALLER FOR EXACT LOCATION AND MOUNTING HEIGHT OF ALL SIGN-IN PANEL RECEPTACLES.
9. CONTRACTOR SHALL COORDINATE WITH OWNER AND OWNER'S DASHBOARD DISPLAY PANEL INSTALLER FOR EXACT LOCATION AND MOUNTING HEIGHT OF ALL DASHBOARD DISPLAY PANEL RECEPTACLES.
10. CONTRACTOR SHALL COORDINATE WITH CONTRACT 'P' FOR EXACT LOCATION OF WATER/OIL SEPARATOR TANK, TANK SENSORS, AND TYPE OF SENSOR WIRING.
11. CONTRACTOR SHALL PROVIDE A 20A/3P CIRCUIT BREAKER IN PANEL PP1 FOR NEW GAS BOOSTER UPS PROVIDED BY CONTRACT 'P'. CONTRACTOR SHALL PROVIDE FEEDER AND CONDUIT FROM UPS TO GAS BOOSTER CONTROL PANEL IN GAS BOOSTER ENCLOSURE. REFER TO SITE PLAN FOR GAS BOOSTER ENCLOSURE LOCATION. ALL ELECTRICAL WORK ASSOCIATED WITH THE GAS BOOSTER SHALL BE PART OF ELECTRICAL ALTERNATE E-06.

H2M architects + engineers
538 Broad Hollow Road, 4th Floor East
Melville, NY 11747
631.756.8000 • www.h2m.com
NY Architecture & Landscape Architecture: No Certificate Required
NY Engineering Certificate of Authorization No.: 0018178

CONSULTANTS:

MARK	DATE	DESCRIPTION

STATE OF NEW YORK · CHARLES J. STARKE · 093837 · LICENSED PROFESSIONAL ENGINEER

7/31/2025
CHARLIE J. STARKE, P.E.
NY PROFESSIONAL ENGINEER Lic. No. 093837
Exp. Date

"IN ACCORDANCE WITH ARTICLE 145, SECTION 7209 OF THE NYS EDUCATION LAW, ALTERATION OF THIS DOCUMENT EXCEPT BY A LICENSED PROFESSIONAL IS ILLEGAL."

DESIGNED BY:	DRAWN BY:	CHECKED BY:	REVIEWED BY:
VLV/INP	INP	VLV	CJS

PROJECT No:	DATE:	SCALE:
TRFD 2302	FEBRUARY 2025	AS SHOWN

CLIENT

THIELLS ROSEVILLE FIRE DISTRICT

NEW 26-100 FIRE HEADQUARTERS

THIELLS 26 FD

65 W RAMAPO ROAD
GARNERVILLE, NY 10923

CONTRACT

CONTRACT E
ELECTRICAL CONSTRUCTION

STATUS

FINAL BID DOCUMENT

SHEET TITLE

ELECTRICAL POWER FIRST FLOOR FLOOR PLAN

DRAWING No.

E 100.00

C:\Users\hussain\Documents\TRFD2302_Central23-M_jhussainEET55.rvt

2/25/2025 1:59:57 PM

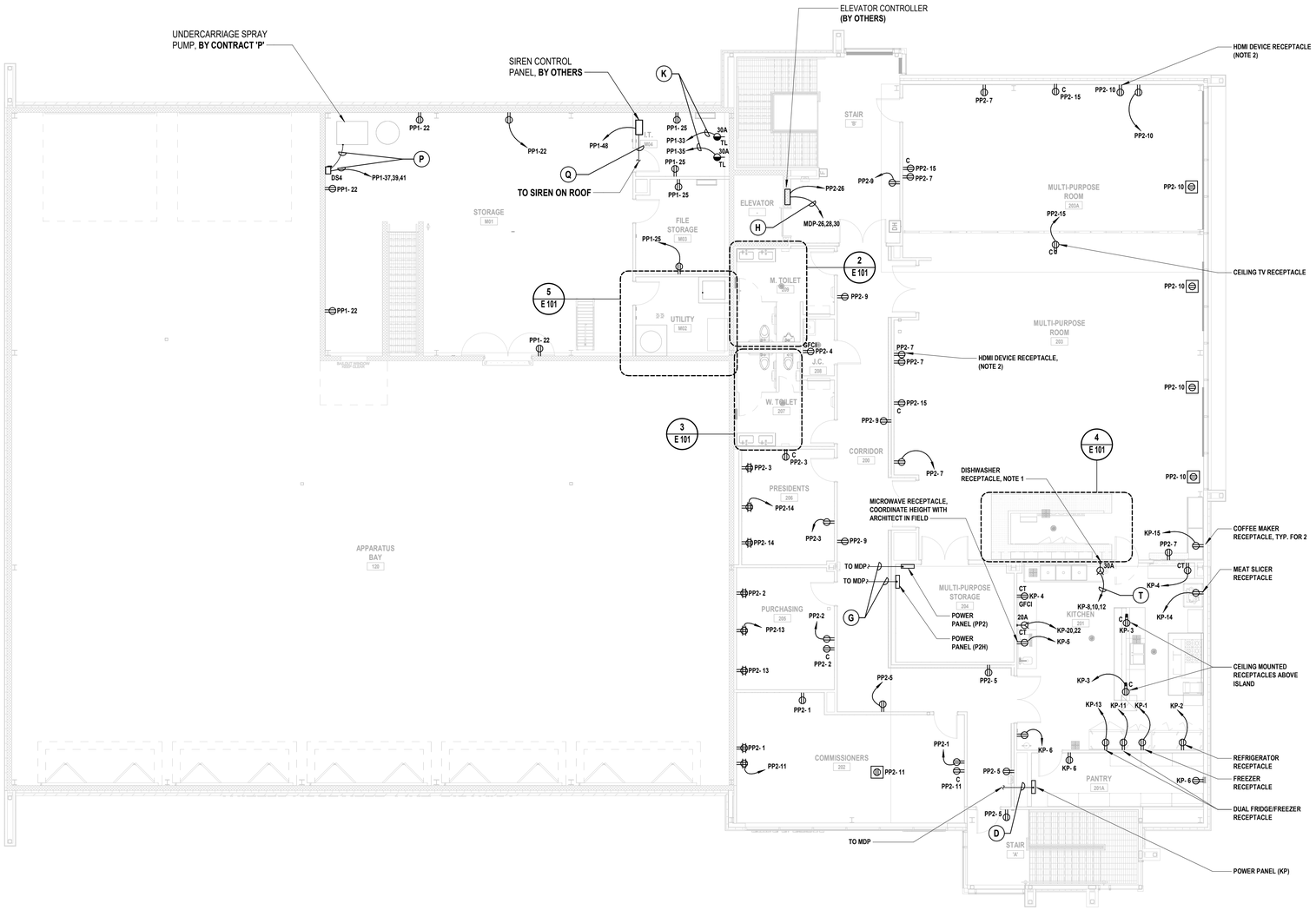

1 Electrical Second Floor Power Plan

SCALE: 1/8" = 1'-0"

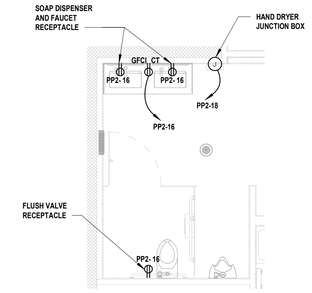

2 Enlarged 2nd Floor Men's Toilet

SCALE: 1/4" = 1'-0"

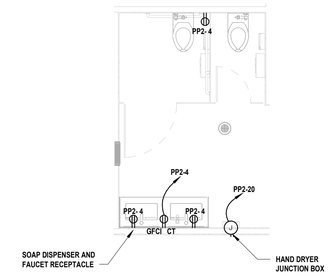

3 Enlarged 2nd Floor Women's Toilet

SCALE: 1/4" = 1'-0"

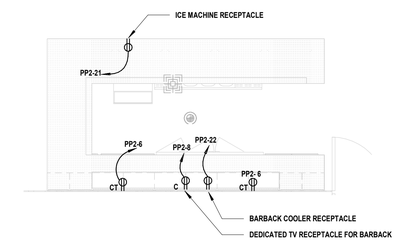

4 Enlarged 2nd Floor Service Area

SCALE: 1/4" = 1'-0"

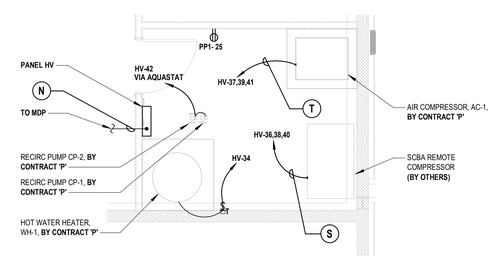

5 Enlarged Utility Room - M02

SCALE: 1/4" = 1'-0"

ELECTRICAL POWER NOTES:

1. CONTRACTOR SHALL PROVIDE MATCHING S.O. CORD AND PLUG END FOR EQUIPMENT INDICATED. PROVIDE ENOUGH SLACK ON S.O. CORD FOR EQUIPMENT TO BE MOVED FOR SERVICE. COORDINATED MOUNTING HEIGHT AND LOCATION OR RECEPTACLE IN FIELD.
2. CONTRACTOR SHALL COORDINATE WITH OWNER AND OWNER'S DASHBOARD DISPLAY PANEL INSTALLER FOR EXACT LOCATION AND MOUNTING HEIGHT OF ALL DASHBOARD DISPLAY PANEL RECEPTACLES.
3. CONTRACTOR SHALL COORDINATE EXACT LOCATION AND MOUNTING HEIGHT WITH OWNER'S A/V EQUIPMENT INSTALLER.

H2M architects + engineers

538 Broad Hollow Road, 4th Floor East
Melville, NY 11747
631.756.8000 • www.h2m.com
NY Architecture & Landscape Architecture: No Certificate Required
NY Engineering Certificate of Authorization No.: 0018178

CONSULTANTS:

MARK	DATE	DESCRIPTION

STATE OF NEW YORK · CHARLES J. STARKE · 093837 · LICENSED PROFESSIONAL ENGINEER

7/31/2025
CHARLIE J. STARKE, P.E.
NY PROFESSIONAL ENGINEER Lic. No. 093837
Exp. Date

"IN ACCORDANCE WITH ARTICLE 145, SECTION 7209 OF THE NYS EDUCATION LAW, ALTERATION OF THIS DOCUMENT EXCEPT BY A LICENSED PROFESSIONAL IS ILLEGAL"

DESIGNED BY:	DRAWN BY:	CHECKED BY:	REVIEWED BY:
VLV/INP	INP	VLV	CJS
PROJECT No: TRFD 2302	DATE: FEBRUARY 2025	SCALE: AS SHOWN	

CLIENT

THIELLS ROSEVILLE FIRE DISTRICT

NEW 26-100 FIRE HEADQUARTERS

65 W RAMAPO ROAD GARNERVILLE, NY 10923

CONTRACT

CONTRACT E ELECTRICAL CONSTRUCTION

STATUS

FINAL BID DOCUMENT

SHEET TITLE

ELECTRICAL POWER SECOND FLOOR FLOOR PLAN

DRAWING No.

E 101.00

C:\Users\hussain\Documents\TRFD2302_Central23-M_jhussainEBTR5.rvt

2/25/2025 2:00:01 PM

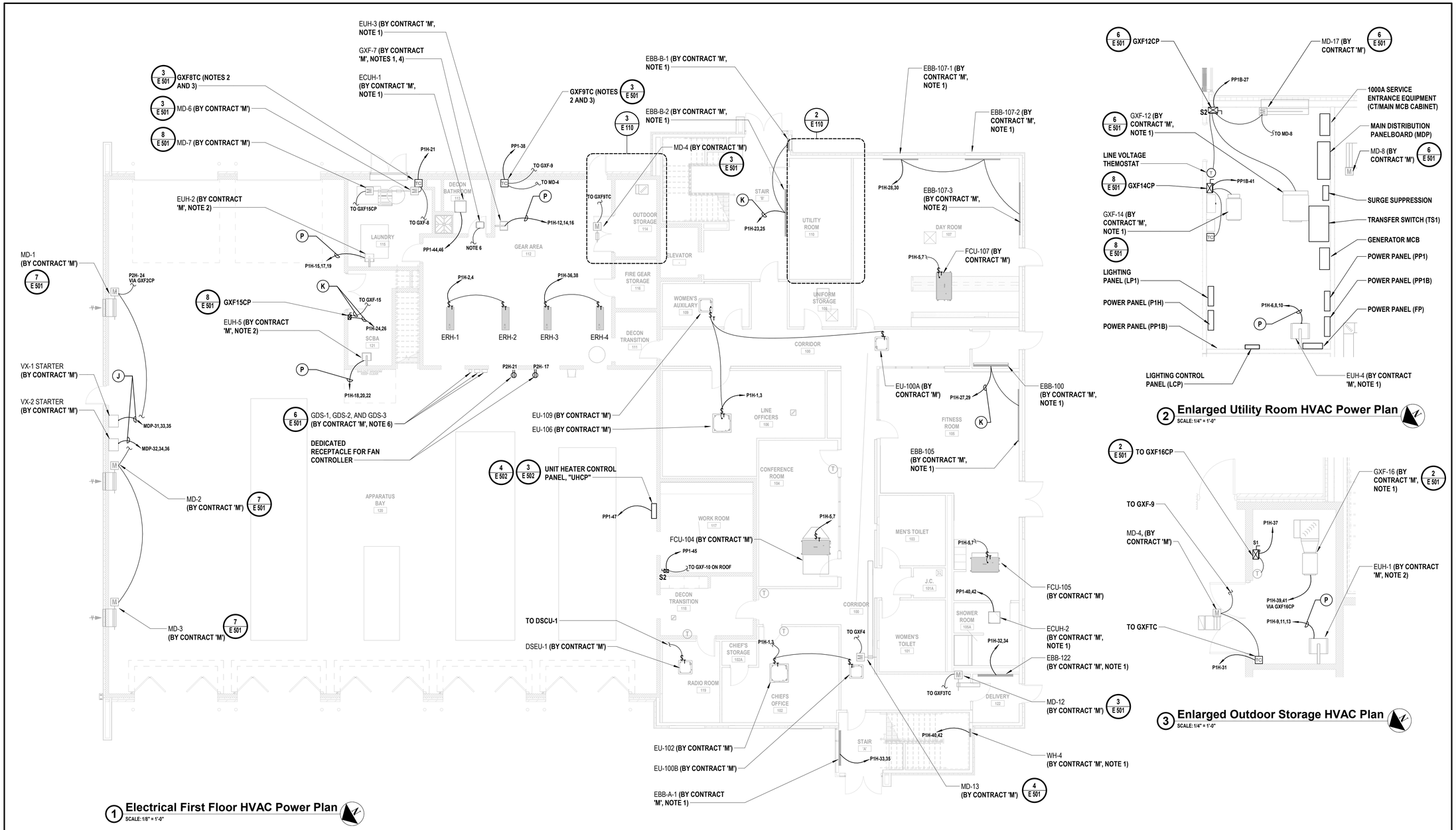

1 Electrical First Floor HVAC Power Plan

SCALE: 1/8" = 1'-0"

2 Enlarged Utility Room HVAC Power Plan

SCALE: 1/4" = 1'-0"

3 Enlarged Outdoor Storage HVAC Plan

SCALE: 1/4" = 1'-0"

ELECTRICAL POWER NOTES:

1. EQUIPMENT HAS BUILT-IN DISCONNECT SWITCH INTEGRAL TO THE UNIT.
2. CONTRACTOR SHALL COORDINATE TIME CLOCK ON/OFF SCHEDULE PROGRAMMING WITH MECHANICAL ENGINEERS DURING START-UP OF EQUIPMENT.
3. CONTRACTOR SHALL PROVIDE AND INSTALL TIME CLOCK. MANUFACTURER: TORK, MODEL: DG100A. TIME CLOCK SHALL BE MOTOR RATED.
4. CONTRACTOR SHALL INTERLOCK EXHAUST FAN WITH TOILET ROOM LIGHT CIRCUIT.
5. CONTRACTOR SHALL INTERFACE GDS-1, GDS-2, AND GDS-3 WITH GXF-2 CONTROL PANEL, "GXF2CP". WHEN EITHER ONE OF THE GAS DETECTION SYSTEM PANELS HIGH ALARM IS ACTIVATED, GXF-2 SHALL BE CALLED TO START. CONTRACTOR SHALL PROVIDE ALL REQUIRED COMPONENTS INCLUDING WIRING, CONDUIT, AND RELAYS.

ELECTRICAL GENERAL NOTE:

EG1. CONTRACTOR SHALL COORDINATE WITH EQUIPMENT INSTALLER FOR EXACT LOCATION AND MOUNTING HEIGHT OF EQUIPMENT.

H2M architects + engineers

538 Broad Hollow Road, 4th Floor East
Melville, NY 11747
631.756.8000 • www.h2m.com
NY Architecture & Landscape Architecture: No Certificate Required
NY Engineering Certificate of Authorization No.: 0018178

CONSULTANTS:

MARK	DATE	DESCRIPTION

STATE OF NEW YORK · CHARLES J. STARKE · 093857 · LICENSED PROFESSIONAL ENGINEER

7/31/2025
CHARLIE J. STARKE, P.E.
Exp. Date
NY PROFESSIONAL ENGINEER Lic. No. 093857

"IN ACCORDANCE WITH ARTICLE 145, SECTION 7209 OF THE NYS EDUCATION LAW, ALTERATION OF THIS DOCUMENT EXCEPT BY A LICENSED PROFESSIONAL IS ILLEGAL"

DESIGNED BY:	DRAWN BY:	CHECKED BY:	REVIEWED BY:
VLV/INP	INP	VLV	CJS
PROJECT No: TRFD 2302	DATE: FEBRUARY 2025	SCALE: AS SHOWN	

CLIENT

THIELLS ROSEVILLE FIRE DISTRICT

NEW 26-100 FIRE HEADQUARTERS

THIELLS 26 FD

65 W RAMAPO ROAD
GARNERVILLE, NY 10923

CONTRACT

CONTRACT E
ELECTRICAL CONSTRUCTION

STATUS

FINAL BID DOCUMENT

SHEET TITLE

ELECTRICAL HVAC POWER FIRST FLOOR PLAN

DRAWING No.

E 110.00

C:\Users\lhussain\Documents\TRFD2302_Central25-M_lhussainEBT85.rvt

2/25/2025 2:00:02 PM

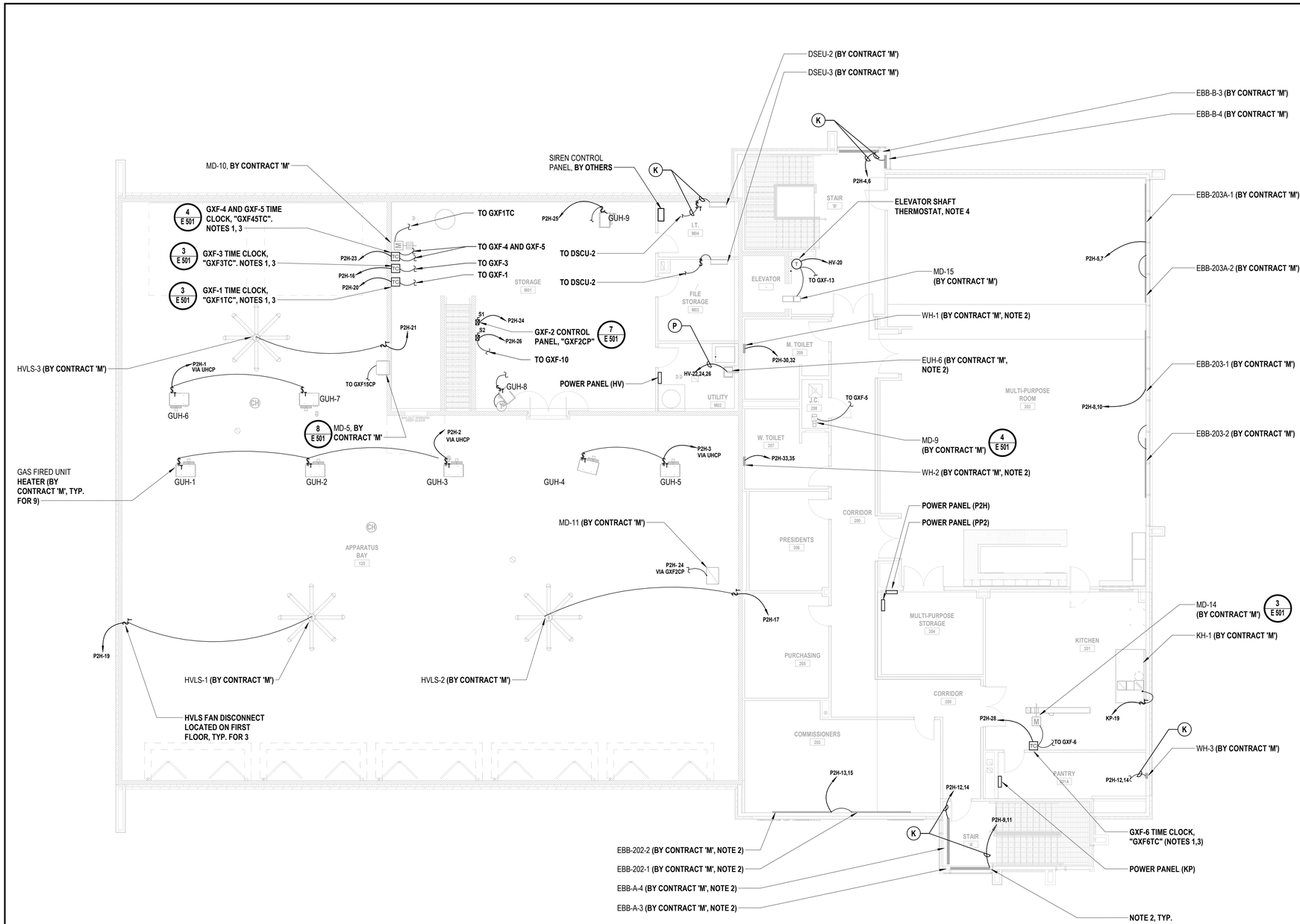

1 Electrical Second Floor HVAC Power Plan

SCALE: 1/8" = 1'-0"

ELECTRICAL POWER NOTES:

1. CONTRACTOR SHALL COORDINATE WITH EQUIPMENT INSTALLER FOR EXACT LOCATION AND MOUNTING HEIGHT OF EQUIPMENT.
2. EQUIPMENT HAS BUILT-IN DISCONNECT SWITCH INTEGRAL TO THE UNIT.
3. CONTRACTOR SHALL COORDINATE TIME CLOCK ON/OFF SCHEDULE PROGRAMMING WITH MECHANICAL ENGINEER AND OWNER DURING START-UP OF EQUIPMENT.
4. CONTRACTOR SHALL PROVIDE A LINE VOLTAGE THERMOSTAT WITH REMOTE MOUNTED PROBE FOR THE ELEVATOR SHAFT (HONEYWELL MODEL T675A OR APPROVE EQUAL). CONTRACTOR SHALL INTERFACE THERMOSTAT WITH GXF-13 AND MOTORIZED DAMPER MD-16. CONTRACTOR SHALL COORDINATE WITH MECHANICAL CONTRACTOR FOR EXACT LOCATION OF THERMOSTAT AND REMOTE TEMPERATURE PROBE INSIDE THE ELEVATOR SHAFT.

H2M architects + engineers

538 Broad Hollow Road, 4th Floor East
Melville, NY 11747
631.756.8000 • www.h2m.com
NY Architecture & Landscape Architecture: No Certificate Required
NY Engineering Certificate of Authorization No.: 0018178

CONSULTANTS:

MARK	DATE	DESCRIPTION

STATE OF NEW YORK · CHARLES J. STARKE · 093837 · LICENSED PROFESSIONAL ENGINEER

7/31/2025
Exp. Date

CHARLIE J. STARKE, P.E.
NY PROFESSIONAL ENGINEER Lic. No. 093837

"IN ACCORDANCE WITH ARTICLE 145, SECTION 7209 OF THE NYS EDUCATION LAW, ALTERATION OF THIS DOCUMENT EXCEPT BY A LICENSED PROFESSIONAL IS ILLEGAL"

DESIGNED BY:	DRAWN BY:	CHECKED BY:	REVIEWED BY:
VLV/INP	INP	VLV	CJS
PROJECT No:	DATE:	SCALE:	
TRFD 2302	FEBRUARY 2025	AS SHOWN	

CLIENT

THIELLS ROSEVILLE FIRE DISTRICT

NEW 26-100 FIRE HEADQUARTERS

THIELLS 26 FD

65 W RAMAPO ROAD GARNERVILLE, NY 10923

CONTRACT

CONTRACT E ELECTRICAL CONSTRUCTION

STATUS

FINAL BID DOCUMENT

SHEET TITLE

ELECTRICAL HVAC POWER SECOND FLOOR PLAN

DRAWING No.

E 111.00

C:\Users\hussain\Documents\TRFD2302_Central\23-M_jhussainEBTT85.rvt

2/25/2025 2:00:04 PM

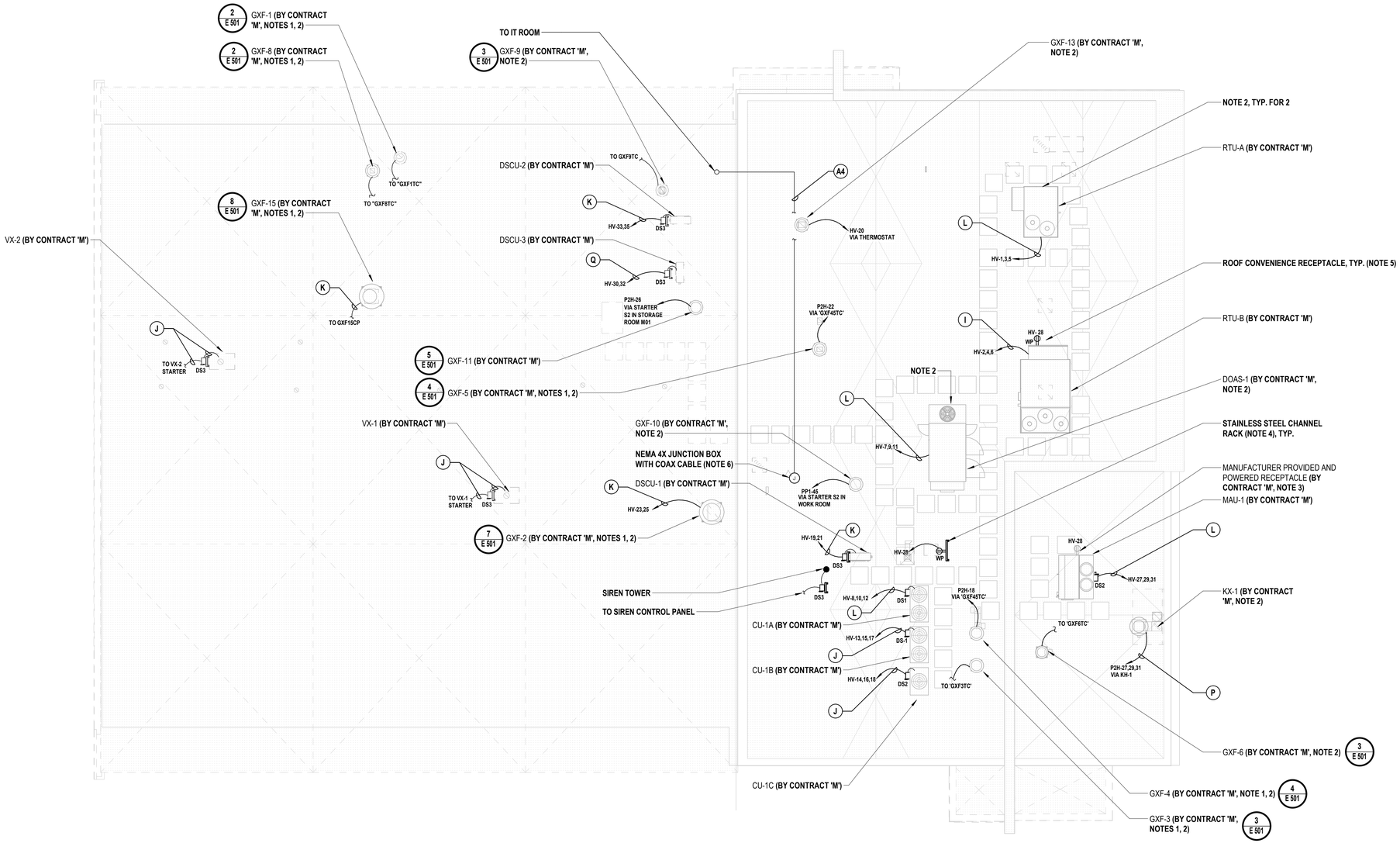

1 Electrical HVAC Roof Power Plan

SCALE: 1/8" = 1'-0"

ELECTRICAL POWER NOTES:

1. CONTRACTOR SHALL COORDINATE WITH EQUIPMENT INSTALLER FOR EXACT LOCATION AND MOUNTING HEIGHT OF EQUIPMENT.
2. EQUIPMENT HAS BUILT-IN DISCONNECT SWITCH INTEGRAL TO THE UNIT.
3. CONTRACTOR SHALL FIELD WIRE AND INSTALL MANUFACTURER PROVIDED OUTLET IN ACCORDANCE WITH MANUFACTURER'S INSTALLATION INSTRUCTION.
4. PROVIDE STAINLESS STEEL CHANNEL SUPPORT AND ASSOCIATED HARDWARE AS REQUIRED TO SECURELY MOUNT EQUIPMENT INDICATED.
5. CONTRACTOR SHALL PROVIDE AND INSTALL WEATHERPROOF IN-USE BOX AND COVER FOR ALL RECEPTACLES MARKED 'WP'.
6. CONTRACTOR SHALL PROVIDE COAX CABLE IN 2" CONDUIT FOR NEW TOWER FROM JUNCTION BOX TO IT ROOM, PROVIDE 20' SLACK. CONTRACTOR SHALL COORDINATE WITH OWNER FOR SIZE/TYPE COAX CABLE AND EXACT LOCATION OF NEW TOWER.

H2M architects + engineers

538 Broad Hollow Road, 4th Floor East
Melville, NY 11747
631.756.8000 • www.h2m.com
NY Architecture & Landscape Architecture: No Certificate Required
NY Engineering Certificate of Authorization No.: 0018178

CONSULTANTS:

MARK	DATE	DESCRIPTION

STATE OF NEW YORK · CHARLES J. STARKE · 093837 · LICENSED PROFESSIONAL ENGINEER

7/31/2025
Exp. Date

CHARLIE J. STARKE, P.E.
NY PROFESSIONAL ENGINEER Lic. No. 093837

"IN ACCORDANCE WITH ARTICLE 145, SECTION 7209 OF THE NYS EDUCATION LAW, ALTERATION OF THIS DOCUMENT EXCEPT BY A LICENSED PROFESSIONAL IS ILLEGAL"

DESIGNED BY:	DRAWN BY:	CHECKED BY:	REVIEWED BY:
VLV/INP	INP	VLV	CJS

PROJECT No:	DATE:	SCALE:
TRFD 2302	FEBRUARY 2025	AS SHOWN

CLIENT

THIELLS ROSEVILLE FIRE DISTRICT

NEW 26-100 FIRE HEADQUARTERS

65 W RAMAPO ROAD GARNERVILLE, NY 10923

CONTRACT

CONTRACT E ELECTRICAL CONSTRUCTION

STATUS

FINAL BID DOCUMENT

SHEET TITLE

ELECTRICAL HVAC POWER ROOF PLAN

DRAWING No.

E 112.00

C:\Users\hussain\Documents\TRFD2302_Central23-M_jhussain\EDIT55.rvt

2/25/2025 2:00:04 PM

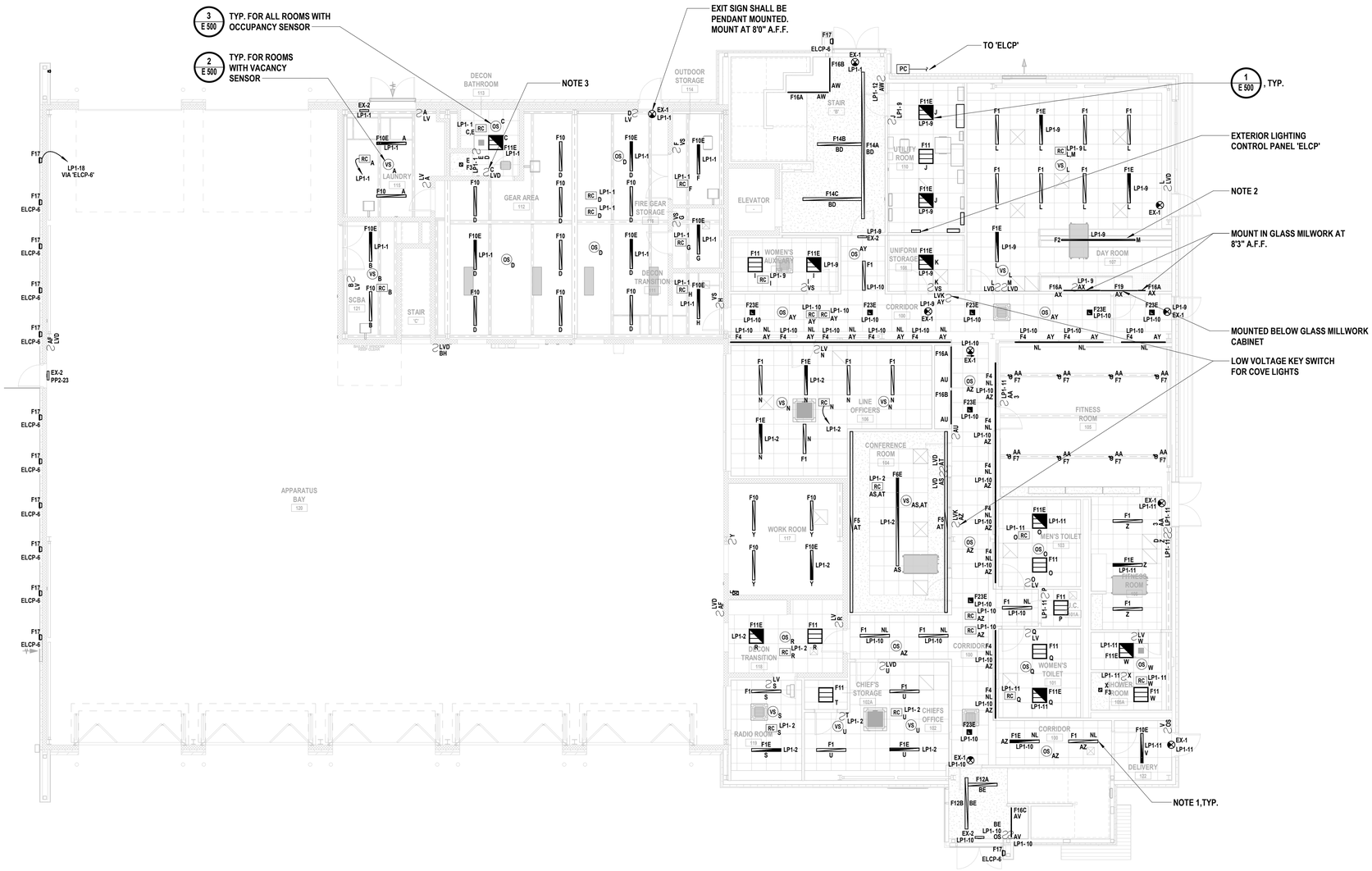

1 Electrical Lighting First Floor Plan

SCALE: 1/8" = 1'-0"

LIGHTING GENERAL NOTES:

G1. PROVIDE ALL REQUIRED WIRING NECESSARY BETWEEN SWITCHES, CONTROLLERS AND/OR OCCUPANCY SENSORS FOR COMPLETE LIGHTING CONTROL. WHERE 3 OR 4 WAY SWITCHES ARE USED, PROVIDE ALL REQUIRED WIRING BETWEEN SWITCHES. WIRE SIZE SHALL EQUAL POWER FEED SIZE.

G2. CONTRACTORS SHALL LOCATE AND INSTALL ALL LIGHT FIXTURES IN MECHANICAL ROOMS TO PROVIDE CLEARANCE FROM ALL MECHANICAL EQUIPMENT. COORDINATE WITH MECHANICAL CONTRACTOR PRIOR TO INSTALLING FIXTURES, SWITCHES, CONDUIT, AND WIRING.

G3. FIXTURES INDICATED WITH CIRCUIT DESIGNATIONS SHALL BE CONNECTED TO LINE SIDE OF CIRCUIT.

G4. FIXTURES INDICATED WITH LETTER DESIGNATIONS SHALL BE CONNECTED TO THE SWITCH, OCCUPANCY SENSOR AND/OR POWER PACK WITH CORRESPONDING LETTER DESIGNATION.

G5. PROVIDE AND INSTALL A DEDICATED NEUTRAL FOR EACH CIRCUIT. CONTRACTOR IS NOT PERMITTED TO USE COMMON NEUTRALS.

G6. WIRING FOR EMERGENCY BALLAST IS NOT SHOWN ON PLANS. FIXTURES WITH EMERGENCY BALLASTS SHALL BE PROVIDED WITH AN UNSWITCHED POWER FEED FROM CIRCUIT FEEDING LIGHT POLE FIXTURE.

G7. PROVIDE BOX AND ACCESSORIES AS PER MANUFACTURER'S RECOMMENDATION FOR ALL SWITCHES, OCCUPANCY SENSORS, AND/OR POWER PACKS.

G8. VERIFY EXACT LOCATIONS AND MOUNTING HEIGHTS WITH ARCHITECT/ENGINEER IN FIELD.

G9. CONTRACTOR SHALL USE SILICONE WATER PROOF SEALANT TO SEAL TOP, LEFT, AND RIGHT EDGES OF LIGHT FIXTURES TO WALL TO PREVENT MOISTURE FROM ACCUMULATING BEHIND FIXTURE. BOTTOM EDGE SHALL BE LEFT UNSEALED FOR DRAINAGE. COLOR OF SILICONE SHALL MATCH EITHER WALL COLOR OR FIXTURE COLOR. (TYP. OF ALL WALL MOUNTED FIXTURES INCLUDING INTERIOR, EXTERIOR, EXIT AND EMERGENCY LIGHTING).

G10. ALL CEILING MOUNTED FIXTURES WITH EMERGENCY BALLASTS AND ALL FIXTURES THAT ARE PART OF AN EMERGENCY LIGHTING SYSTEM, FED FROM AN EMERGENCY GENERATOR OR CENTRAL BATTERY SYSTEM SHALL BE LABELED. THESE LABELS SHALL BE EASILY READ FROM THE FLOOR LEVEL AND STATE THAT THE FIXTURE IS AN EMERGENCY FIXTURE AND CONTAIN THE PANEL NAME AND CIRCUIT NUMBER THAT IT IS FED FROM.

NOTES:

1. LIGHT FIXTURES MARKED 'NL' SHALL ACT AS A NIGHT LIGHT AND SHALL REMAIN ON AT 50% AT ALL TIMES AND SHALL INCREASE TO 100% UPON DETECTING MOTION.

2. LIGHT FIXTURE SHALL BE MOUNTED ABOVE COUNTER. COORDINATE WITH CONTRACT G FOR EXACT LOCATION AND MOUNTING HEIGHT. PROVIDE AND INSTALL ALL REQUIRED HARDWARE AND ACCESSORIES TO SECURELY MOUNT FIXTURE IN ACCORDANCE WITH MANUFACTURER'S INSTALLATION INSTRUCTIONS.

3. INTERLOCK WITH GX-7. COORDINATE WITH CONTRACT 'M'.

H2M architects + engineers

538 Broad Hollow Road, 4th Floor East
Melville, NY 11747
631.756.8000 • www.h2m.com
NY Architecture & Landscape Architecture: No Certificate Required
NY Engineering Certificate of Authorization No.: 0018178

CONSULTANTS:

MARK	DATE	DESCRIPTION

STATE OF NEW YORK · CHARLES J. STARKE · 093837 · LICENSED PROFESSIONAL ENGINEER

7/31/2025
Exp. Date

CHARLIE J. STARKE, P.E.
NY PROFESSIONAL ENGINEER Lic. No. 093837

"IN ACCORDANCE WITH ARTICLE 145, SECTION 7209 OF THE NYS EDUCATION LAW, ALTERATION OF THIS DOCUMENT EXCEPT BY A LICENSED PROFESSIONAL IS ILLEGAL"

DESIGNED BY:	DRAWN BY:	CHECKED BY:	REVIEWED BY:
VLV/ISH	ISH	VLV	CJS

PROJECT No:	DATE:	SCALE:
TRFD 2302	FEBRUARY 2025	AS SHOWN

CLIENT

THIELLS ROSEVILLE FIRE DISTRICT

NEW 26-100 FIRE HEADQUARTERS

65 W RAMAPO ROAD GARNERVILLE, NY 10923

CONTRACT

CONTRACT E ELECTRICAL CONSTRUCTION

STATUS

FINAL BID DOCUMENT

SHEET TITLE

ELECTRICAL LIGHTING FIRST FLOOR PLAN

DRAWING No.

E 120.00

C:\Users\hussain\Documents\TRFD2302_Central23-M_jhussainEET85.rvt

2/25/2025 2:00:05 PM

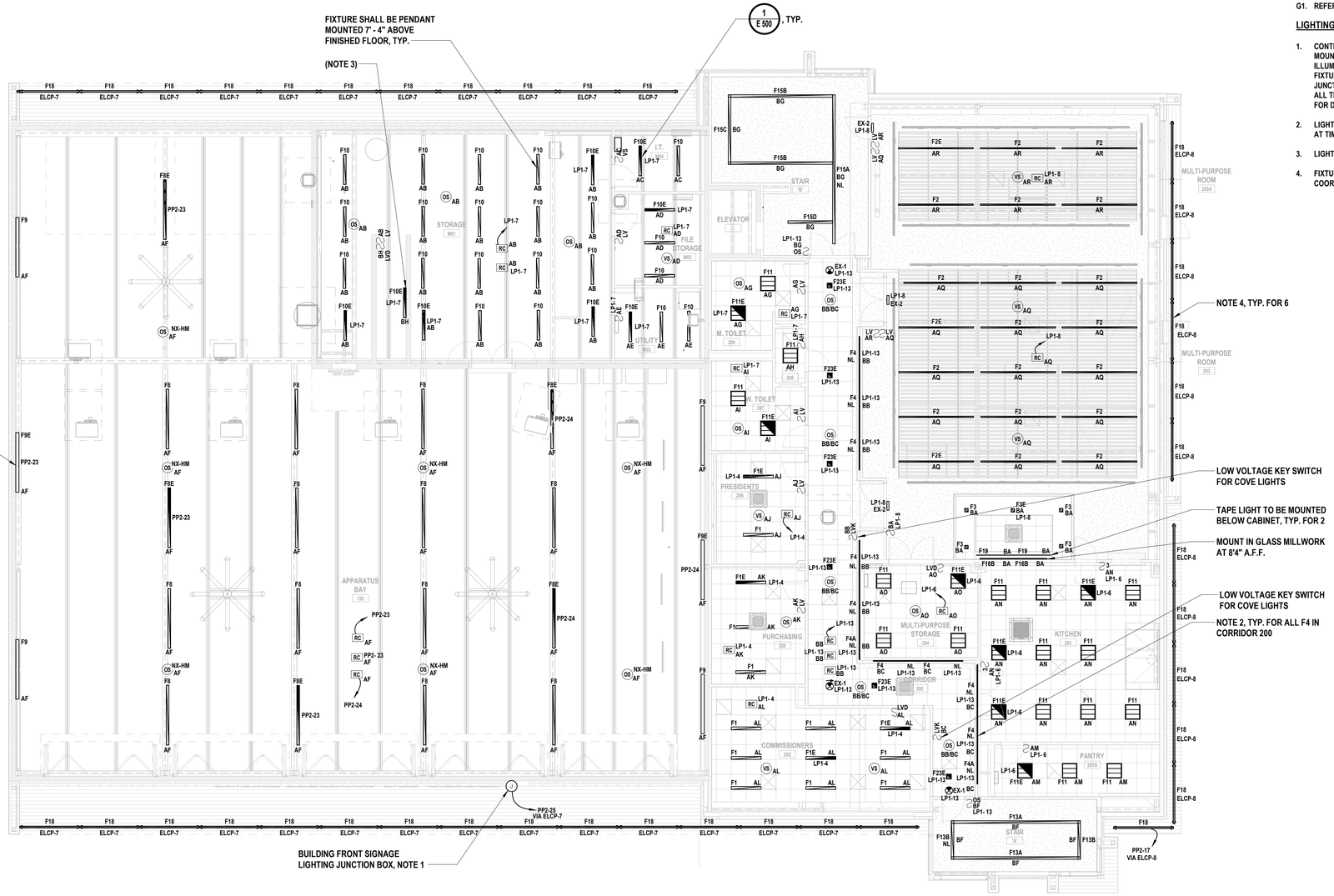

LIGHTING GENERAL NOTES:

G1. REFER TO SHEET E 120 FOR GENERAL LIGHTING NOTES.

LIGHTING KEY NOTES:

1. CONTRACTOR SHALL COORDINATE WITH ARCHITECT IN FIELD FOR EXACT LOCATION AND MOUNTING HEIGHT OF FRONT BUILDING SIGNAGE LIGHTING JUNCTION BOX. EACH ILLUMINATED LETTER IS PROVIDED WITH PRE-WIRED CABLE TO BE ROUTED FROM REAR OF FIXTURE TO INTERIOR OF BUILDING BY MANUFACTURER. CONTRACTOR SHALL PROVIDE JUNCTION BOX(ES) IN CONCEALED LOCATION ON INTERIOR OF BUILDING AS REQUIRED FOR ALL TERMINATIONS TO EACH ILLUMINATED LETTER. REFER TO THE ARCHITECTURAL PLANS FOR DETAILS OF SIGNAGE LETTERS. (ALTERNATE E-04)
2. LIGHT FIXTURES MARKED 'NL' SHALL ACT AS A NIGHT LIGHT AND SHALL REMAIN ON AT 50% AT TIMES AND SHALL INCREASE TO 100% UPON DETECTING MOTION.
3. LIGHT FIXTURE SHALL BE WALL MOUNTED 8'-0" ABOVE STAIRS.
4. FIXTURE F18 TO BE MOUNTED ALONG BOTTOM WINDOW FRAME. CONTRACTOR SHALL COORDINATE WITH ENGINEER IN FIELD FOR EXACT LOCATION AND MOUNTING HEIGHT.

1 **Electrical Lighting Second Floor Plan**
SCALE: 1/8" = 1'-0"

H2M architects + engineers
538 Broad Hollow Road, 4th Floor East
Melville, NY 11747
631.756.8000 • www.h2m.com
NY Architecture & Landscape Architecture: No Certificate Required
NY Engineering Certificate of Authorization No.: 0018178

CONSULTANTS:

MARK	DATE	DESCRIPTION

STATE OF NEW YORK · CHARLES J. STARKE · 093837 · LICENSED PROFESSIONAL ENGINEER

7/31/2025
CHARLIE J. STARKE, P.E.
Exp. Date
NY PROFESSIONAL ENGINEER Lic. No. 093837
"IN ACCORDANCE WITH ARTICLE 145, SECTION 7209 OF THE NYS EDUCATION LAW, ALTERATION OF THIS DOCUMENT EXCEPT BY A LICENSED PROFESSIONAL IS ILLEGAL"

DESIGNED BY:	DRAWN BY:	CHECKED BY:	REVIEWED BY:
VLV/IH	IH	VLV	CJS
PROJECT No: TRFD 2302	DATE: FEBRUARY 2025	SCALE: AS SHOWN	

CLIENT
THIELLS ROSEVILLE FIRE DISTRICT

NEW 26-100 FIRE HEADQUARTERS

THIELLS 26 FD

65 W RAMAPO ROAD GARNERVILLE, NY 10923

CONTRACT
CONTRACT E ELECTRICAL CONSTRUCTION

STATUS
FINAL BID DOCUMENT

SHEET TITLE
ELECTRICAL LIGHTING SECOND FLOOR PLAN

DRAWING No.
E 121.00

C:\Users\hussain\Documents\TRFD2302_Central23-M_jhussainEBT65.rvt
2/25/2025 2:00:06 PM

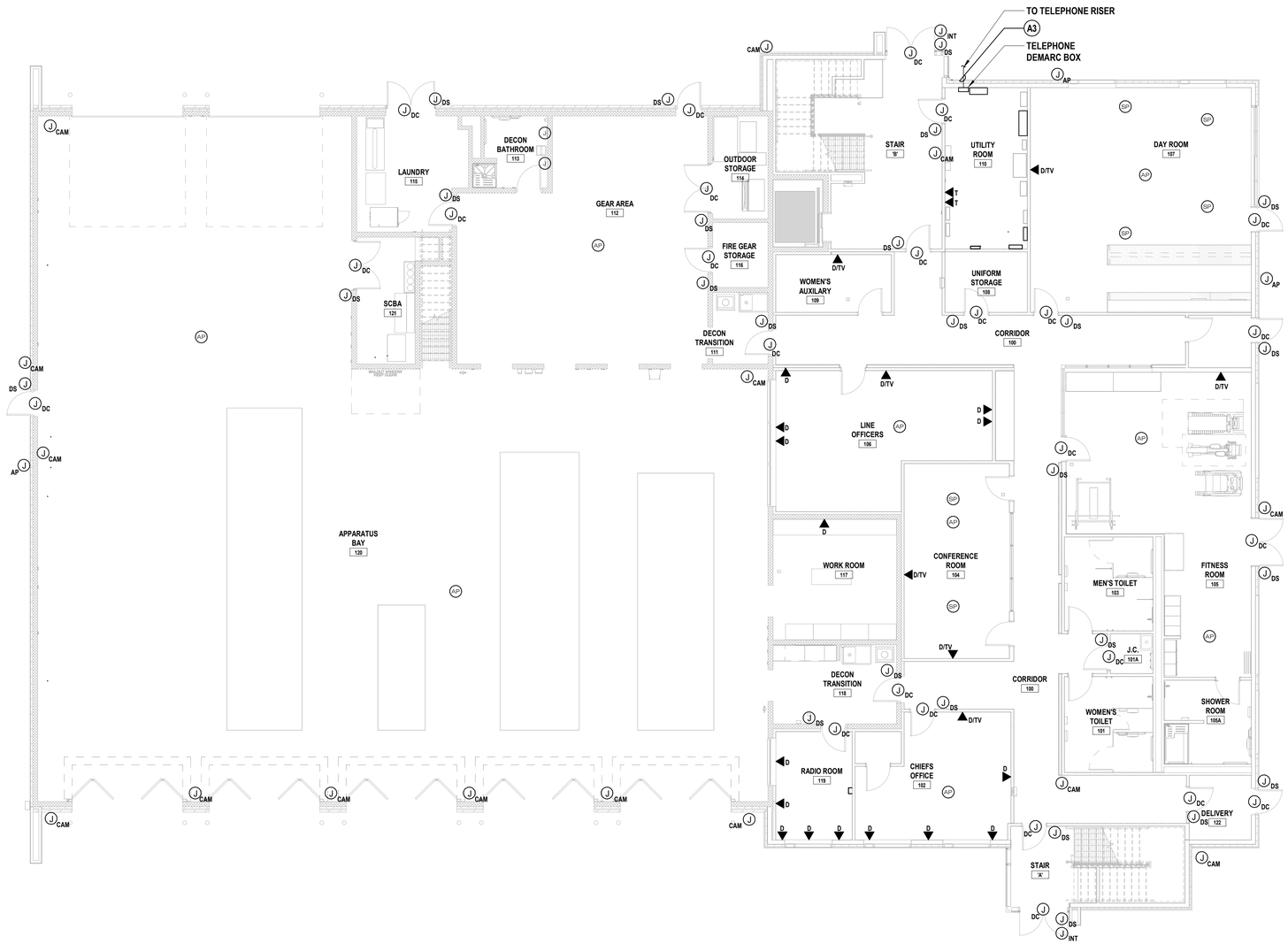

1 Electrical Low Voltage First Floor Plan

SCALE: 1/8" = 1'-0"

GENERAL NOTES:

1. CONTRACTOR SHALL COORDINATE WITH OWNER AND OWNER'S A/V, COMM, AND SECURITY EQUIPMENT INSTALLER FOR EXACT LOCATION AND MOUNTING HEIGHT OF ALL A/V, COMM, AND SECURITY DEVICES AND JUNCTION BOXES. CONTRACTOR SHALL COORDINATE WITH OWNER'S A/V, COMM, AND SECURITY EQUIPMENT INSTALLER FOR ALL TYPE AND QUANTITY OF WIRING REQUIREMENT.

C:\Users\hussain\Documents\TRFD2302_Central23-M_hussainEBTB5.rvt

2/25/2025 2:00:07 PM

H2M architects + engineers

538 Broad Hollow Road, 4th Floor East
Melville, NY 11747
631.756.8000 • www.h2m.com
NY Architecture & Landscape Architecture: No Certificate Required
NY Engineering Certificate of Authorization No.: 0018178

CONSULTANTS:

MARK	DATE	DESCRIPTION

STATE OF NEW YORK · CHARLES J. STARKE · 093837 · LICENSED PROFESSIONAL ENGINEER

7/31/2025
Exp. Date

CHARLIE J. STARKE, P.E.
NY PROFESSIONAL ENGINEER Lic. No. 093837

"IN ACCORDANCE WITH ARTICLE 145, SECTION 7209 OF THE NYS EDUCATION LAW, ALTERATION OF THIS DOCUMENT EXCEPT BY A LICENSED PROFESSIONAL IS ILLEGAL"

DESIGNED BY:	DRAWN BY:	CHECKED BY:	REVIEWED BY:
VLV/ISH	ISH	VLV	CJS

PROJECT No:	DATE:	SCALE:
TRFD 2302	FEBRUARY 2025	AS SHOWN

CLIENT

THIELLS ROSEVILLE FIRE DISTRICT

NEW 26-100 FIRE HEADQUARTERS

THIELLS 26 FD

65 W RAMAPO ROAD GARNERVILLE, NY 10923

CONTRACT

CONTRACT E ELECTRICAL CONSTRUCTION

STATUS

FINAL BID DOCUMENT

SHEET TITLE

ELECTRICAL LOW VOLTAGE FIRST FLOOR PLAN

DRAWING No.

E 130.00

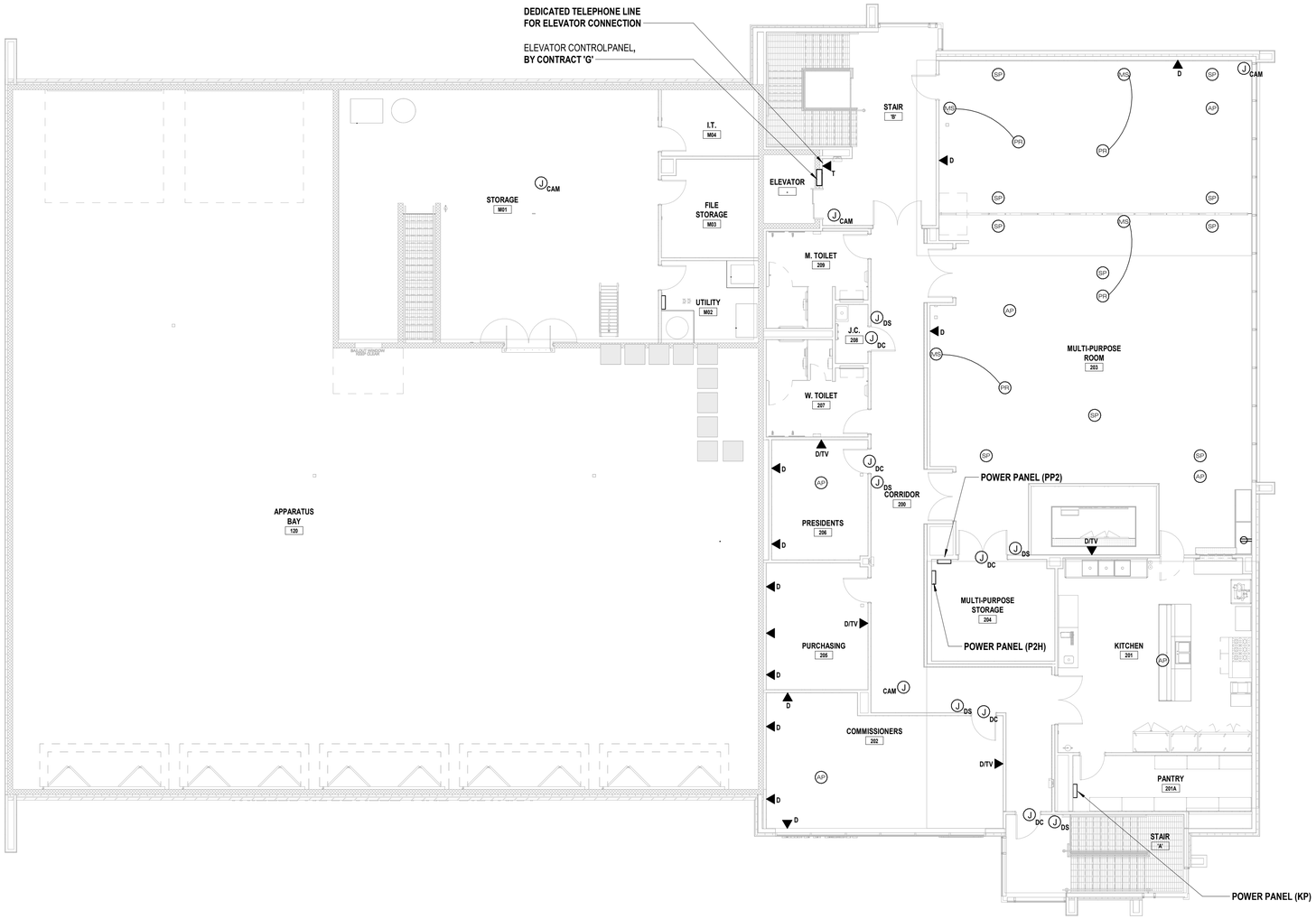

1 Electrical Low Voltage Second Floor Plan

SCALE: 1/8" = 1'-0"

GENERAL NOTES:

1. CONTRACTOR SHALL COORDINATE WITH OWNER AND OWNER'S A/V, COMM, AND SECURITY EQUIPMENT INSTALLER FOR EXACT LOCATION AND MOUNTING HEIGHT OF ALL A/V, COMM, AND SECURITY DEVICES AND JUNCTION BOXES. CONTRACTOR SHALL COORDINATE WITH OWNER'S A/V, COMM, AND SECURITY EQUIPMENT INSTALLER FOR ALL TYPE AND QUANTITY OF WIRING REQUIREMENT.

C:\Users\hussain\Documents\TRFD2302_Central23-M_jhussainEBT85.rvt

2/25/2025 2:00:07 PM

H2M architects + engineers

538 Broad Hollow Road, 4th Floor East
Melville, NY 11747
631.756.8000 • www.h2m.com
NY Architecture & Landscape Architecture: No Certificate Required
NY Engineering Certificate of Authorization No.: 0018178

CONSULTANTS:

MARK	DATE	DESCRIPTION

STATE OF NEW YORK · CHARLES J. STARKE · 093837 · LICENSED PROFESSIONAL ENGINEER

7/31/2025
Exp. Date

CHARLIE J. STARKE, P.E.
NY PROFESSIONAL ENGINEER Lic. No. 093837

"IN ACCORDANCE WITH ARTICLE 145, SECTION 7209 OF THE NYS EDUCATION LAW, ALTERATION OF THIS DOCUMENT EXCEPT BY A LICENSED PROFESSIONAL IS ILLEGAL"

DESIGNED BY:	DRAWN BY:	CHECKED BY:	REVIEWED BY:
VLV/INP	INP	VLV	AWK
PROJECT No: TRFD 2302	DATE: FEBRUARY 2025	SCALE: AS SHOWN	

CLIENT

THIELLS ROSEVILLE FIRE DISTRICT

NEW 26-100 FIRE HEADQUARTERS

THIELLS 26 FD

65 W RAMAPO ROAD GARNERVILLE, NY 10923

CONTRACT

CONTRACT E ELECTRICAL CONSTRUCTION

STATUS

FINAL BID DOCUMENT

SHEET TITLE

ELECTRICAL LOW VOLTAGE SECOND FLOOR PLAN

DRAWING No.

E 131.00

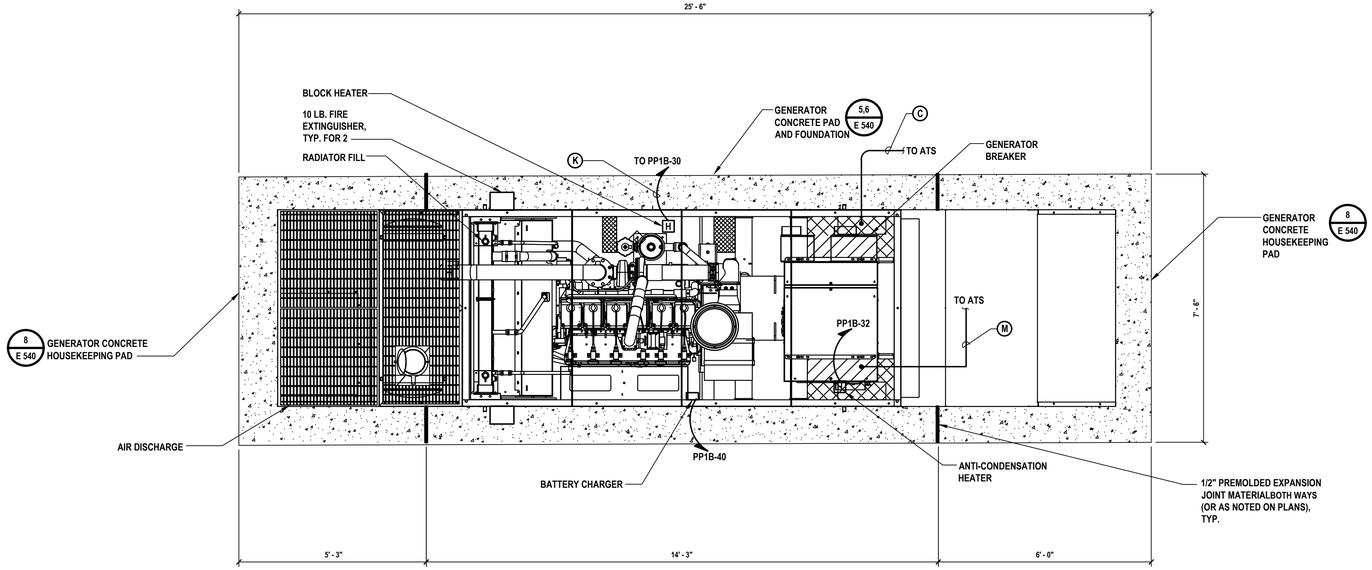

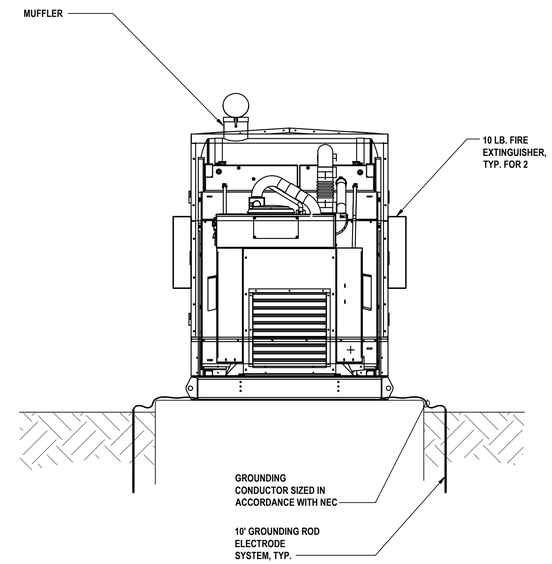

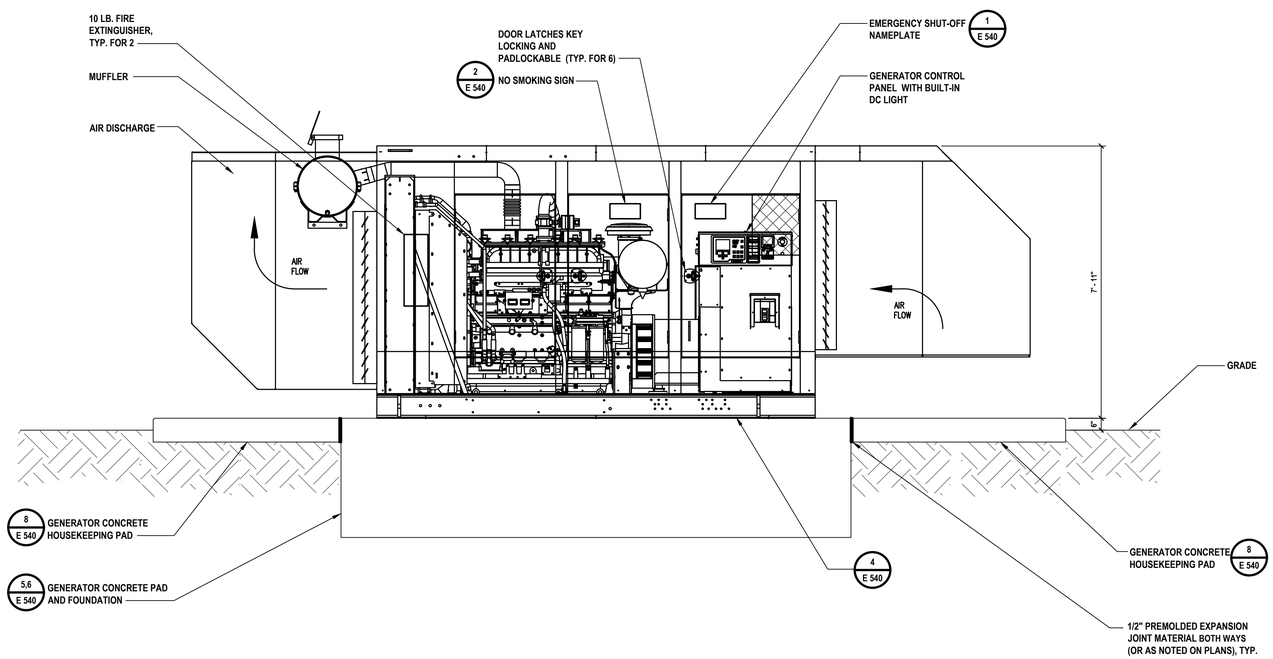

1 **Generator Plan and Elevations**
SCALE:1/2"= 1'-0"

H2M architects + engineers
538 Broad Hollow Road, 4th Floor East
Melville, NY 11747
631.756.8000 • www.h2m.com
NY Architecture & Landscape Architecture: No Certificate Required
NY Engineering Certificate of Authorization No. 0018178

CONSULTANTS:

MARK	DATE	DESCRIPTION

STATE OF NEW YORK · CHARLES J. STARKE · 092837 · LICENSED PROFESSIONAL ENGINEER

7/31/2025
EXP. DATE

CHARLIE J. STARKE, P.E.
NY PROFESSIONAL ENGINEER Lic. No. 092837

"IN ACCORDANCE WITH ARTICLE 145, SECTION 7209 OF THE NYS EDUCATION LAW, ALTERATION OF THIS DOCUMENT EXCEPT BY LICENSE PROFESSIONAL IS ILLEGAL"

DESIGNED BY:	DRAWN BY:	CHECKED BY:	REVIEWED BY:
VLV/INP	INP	VLV	CJS

PROJECT No.:	DATE:	SCALE:
TRFD 2302	FEBRUARY 2025	AS SHOWN

CLIENT

THIELLS ROSEVILLE FIRE DISTRICT

NEW 26-100 FIRE HEADQUARTERS

65 W RAMAPO RD GARNERVILLE, NY 10923

CONTRACT

CONTRACT E ELECTRICAL CONSTRUCTION

STATUS

SHEET TITLE

GENERATOR PLAN AND ELEVATIONS

DRAWING No.

E 140.00

X:\TRFD (Thiells Roseville Fire District)\TRFD2302 (New Fire Station)\02-BIM-CADD\Civil-Dwgs\15 Electric\E140.00 - GENERATOR PLAN AND ELEVATION.dwg Last Modified: Oct 02, 2024 - 1:43pm Plotted on: Feb 06, 2025 - 11:16am By VVillegas

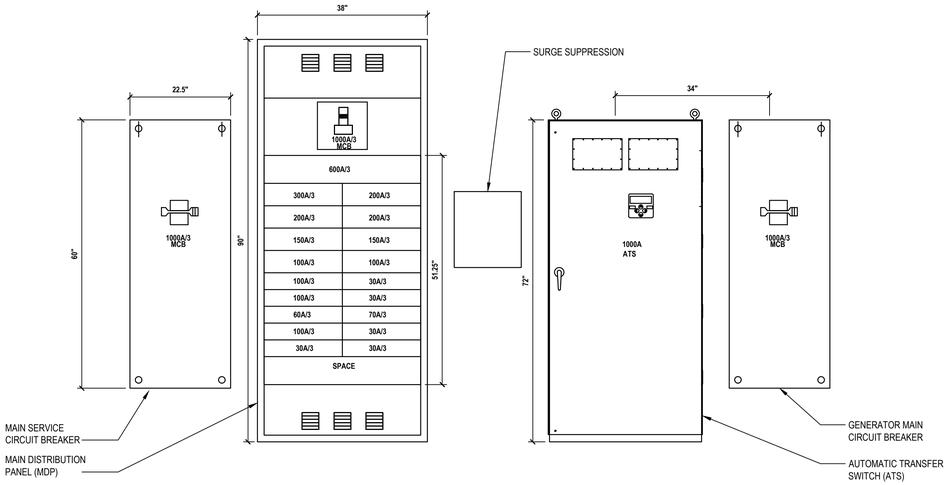

1 Main Service Entrance Electrical Equipment Elevation

SCALE:N.T.S.

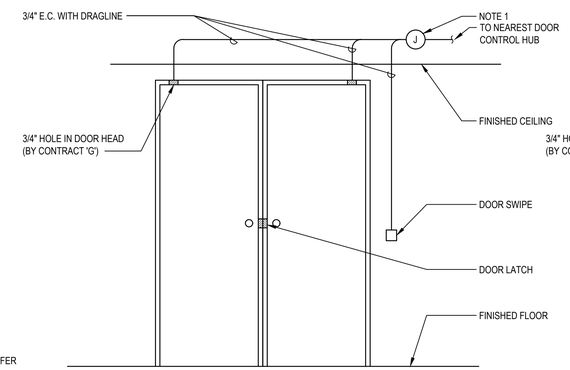

2 Security System Conduit Detail (Double Door)

SCALE:NTS

NOTES:

1. COORDINATE INSTALLATION AND EXACT MOUNTING HEIGHT AND LOCATION WITH ARCHITECT/ENGINEER IN FIELD.

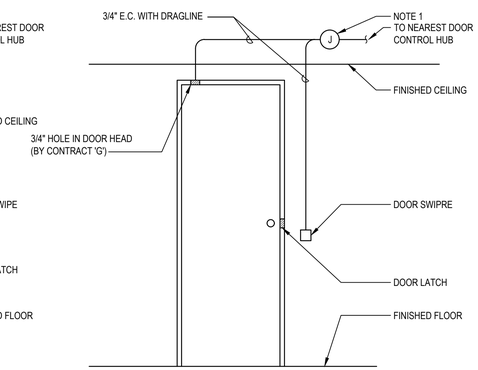

3 Security System Conduit Detail (Single Door)

SCALE:NTS

NOTES:

1. COORDINATE INSTALLATION AND EXACT MOUNTING HEIGHT AND LOCATION WITH ARCHITECT/ENGINEER IN FIELD.

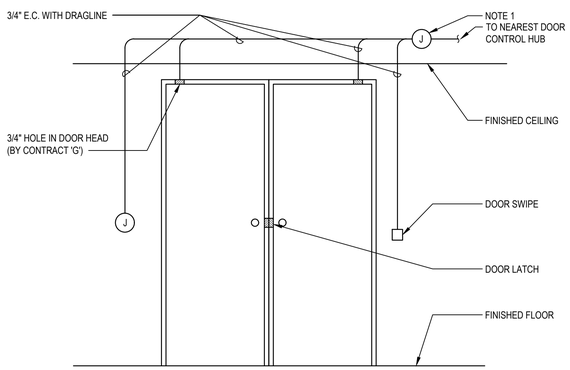

4 Security System Conduit Detail With Electrified Hinge (Double Door)

SCALE:NTS

NOTES:

1. COORDINATE INSTALLATION AND EXACT MOUNTING HEIGHT AND LOCATION WITH ARCHITECT/ENGINEER IN FIELD.

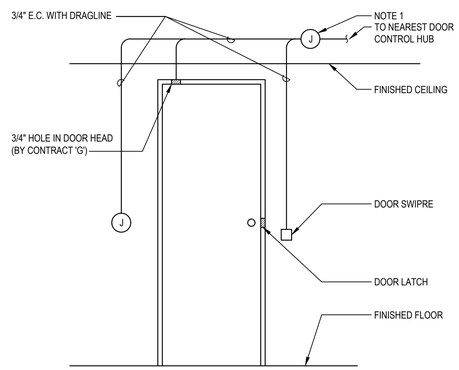

5 Security System Conduit Detail With Electrified Hinge (Single Door)

SCALE:NTS

NOTES:

1. COORDINATE INSTALLATION AND EXACT MOUNTING HEIGHT AND LOCATION WITH ARCHITECT/ENGINEER IN FIELD.

H2M architects + engineers

538 Broad Hollow Road, 4th Floor East
Melville, NY 11747
631.756.8000 • www.h2m.com
NY Architecture & Landscape Architecture: No Certificate Required
NY Engineering Certificate of Authorization No. 0018178

CONSULTANTS:

MARK	DATE	DESCRIPTION

STATE OF NEW YORK · CHARLES J. STARKE · 093837 · LICENSED PROFESSIONAL ENGINEER

7/31/2025
EXP. DATE

CHARLIE J. STARKE, P.E.
NY PROFESSIONAL ENGINEER Lic. No. 093837

"IN ACCORDANCE WITH ARTICLE 145, SECTION 7209 OF THE NYS EDUCATION LAW, ALTERATION OF THIS DOCUMENT EXCEPT BY LICENSE PROFESSIONAL IS ILLEGAL"

DESIGNED BY:	DRAWN BY:	CHECKED BY:	REVIEWED BY:
VLV/INP	INP	VLV	CJS

PROJECT No.:	DATE:	SCALE:
TRFD 2302	FEBRUARY 2025	AS SHOWN

CLIENT

THIELLS ROSEVILLE FIRE DISTRICT

NEW 26-100 FIRE HEADQUARTERS

65 W RAMAPO RD GARNERVILLE, NY 10923

CONTRACT

CONTRACT E
ELECTRICAL CONSTRUCTION

STATUS

SHEET TITLE

ELECTRICAL DETAILS SHEET NO. 2

DRAWING No.

E 200.00

X:\TRFD\Thiells Roseville Fire District\TRFD2302 (New Fire Station)\02-BIM-CADD\Con-Docs\15 Electric\E 200.00 - Electrical Equipment Elevation.dwg Last Modified: Feb 19, 2025 - 12:02pm Plotted on: Feb 25, 2025 - 2:32pm By lhussain

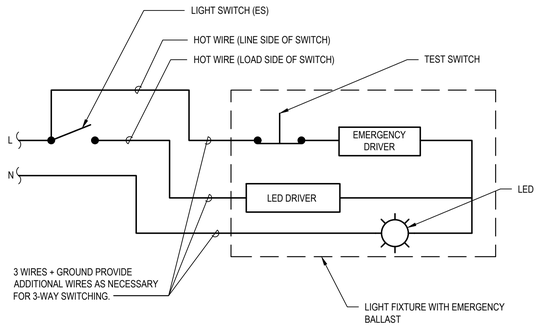

1 Typical Detail of Light Fixture with Emergency Ballast
SCALE: NTS

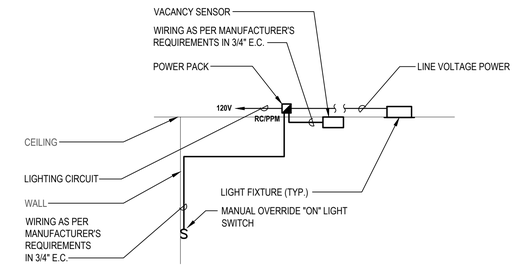

2 Typical Detail of Light Fixture With Vacancy Sensor
SCALE:NTS

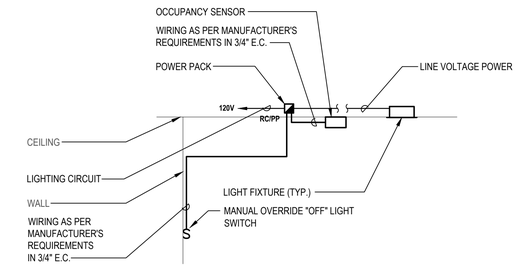

3 Typical Detail of Light Fixture With Occupancy Sensor
SCALE:NTS

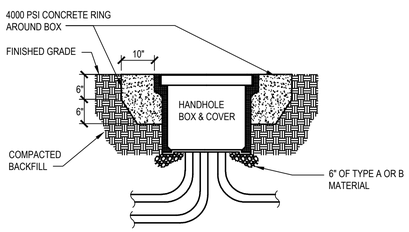

4 Polymer Concrete Handhole Installation Detail
SCALE: NTS

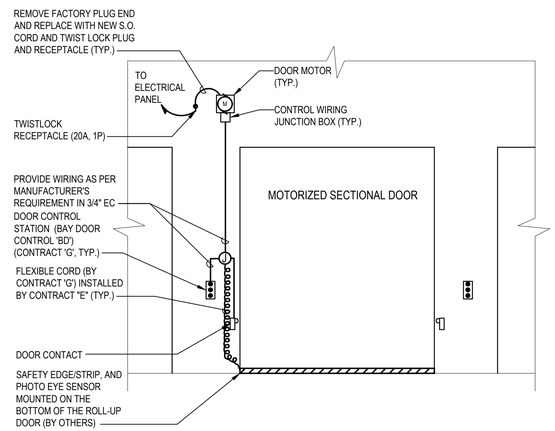

5 Garage Door Control - Elevation Plan
SCALE: NTS

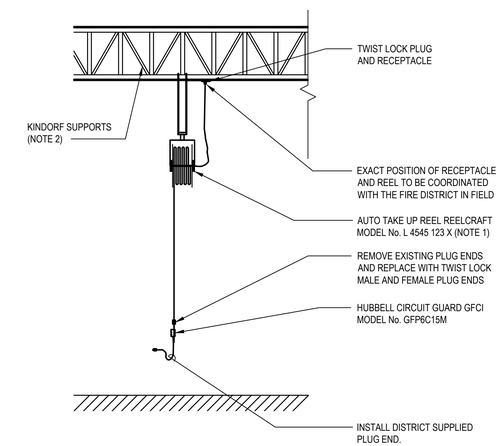

6 Cord Reel Receptacle Detail
SCALE: NTS

NOTES:

1. COORDINATE WITH OWNER AS REQUIRED PRIOR TO ORDERING EQUIPMENT.
2. PROVIDE ALL MOUNTING HARDWARE AND ACCESSORIES AS REQUIRED TO SECURELY MOUNT EQUIPMENT.

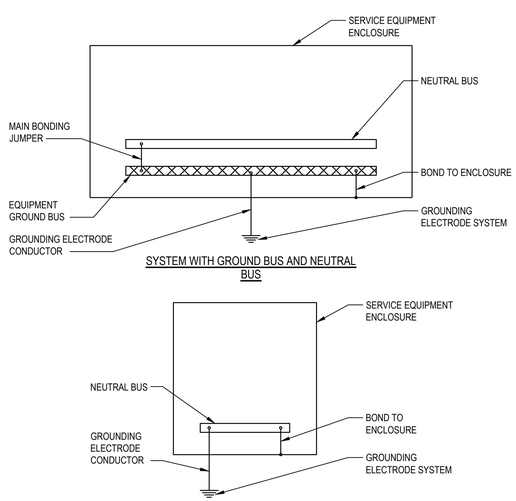

7 Basic System Grounding
SCALE: NTS

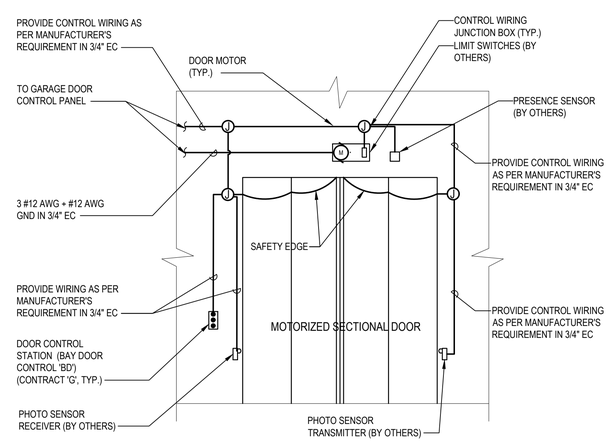

8 Garage Door Control - Elevation Plan (Alternate No. E-01)
SCALE: NTS

H2M architects + engineers
538 Broad Hollow Road, 4th Floor East
Melville, NY 11747
631.756.8000 • www.h2m.com
NY Architecture & Landscape Architecture: No Certificate Required
NY Engineering Certificate of Authorization No. 0018178

CONSULTANTS:

MARK	DATE	DESCRIPTION

STATE OF NEW YORK · CHARLES J. STARKE · 093837 · LICENSED PROFESSIONAL ENGINEER

7/31/2025
EXP. DATE

CHARLIE J. STARKE, P.E.
NY PROFESSIONAL ENGINEER Lic. No. 093837
"IN ACCORDANCE WITH ARTICLE 145, SECTION 7209 OF THE NYS EDUCATION LAW, ALTERATION OF THIS DOCUMENT EXCEPT BY LICENSE PROFESSIONAL IS ILLEGAL"

DESIGNED BY:	DRAWN BY:	CHECKED BY:	REVIEWED BY:
VLV/INP	INP	VLV	CJS

PROJECT No.:	DATE:	SCALE:
TRFD 2302	FEBRUARY 2025	AS SHOWN

CLIENT

THIELLS ROSEVILLE FIRE DISTRICT

NEW 26-100 FIRE HEADQUARTERS

65 W RAMAPO RD GARNERVILLE, NY 10923

CONTRACT

CONTRACT E ELECTRICAL CONSTRUCTION

STATUS

SHEET TITLE

ELECTRICAL DETAILS SHEET NO. 1

DRAWING No.

E 500.00

X:\TRFD\(Thiells Roseville Fire District)\TRFD2302 (New Fire Station)\02-BIM-CADD\Con-Docs\15 Electric\E 500.00 - Electrical Details.dwg Last Modified: Feb 18, 2025 - 8:55am Plotted on: Feb 25, 2025 - 2:32pm By: hkasain

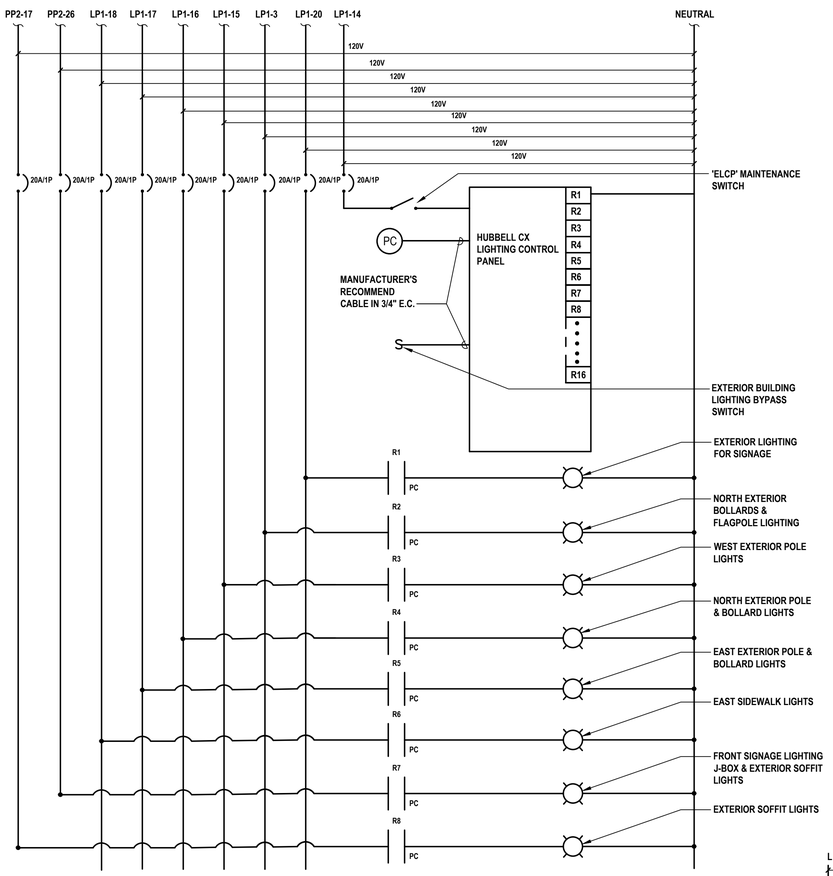

1 Exterior Lighting Control Panel (ELCP) Schematic

SCALE: NTS

NOTES:

1. PROVIDE AND INSTALL ALL REQUIRED LIGHTING CONTROLS, PROGRAMMING, CONTROL WIRING, RELAYS, CONTACTORS, AND SENSORS. INSTALL CONTROLS IN ACCORDANCE WITH MANUFACTURER'S INSTRUCTIONS. PROVIDE LOCKABLE HANDLE ON ENCLOSURE DOOR.
2. FUNCTION NAMEPLATE DESCRIPTION:
   - 'ELCP' MAINTENANCE SWITCH - TURN TO "ON" POSITION FOR NORMAL OPERATION. TURN TO OFF POSITION TO PREVENT LIGHTS FROM TURNING ON
3. ALL ON/OFF TIMES AND CONTROL FOR EACH CIRCUIT SHALL BE COORDINATED DURING SYSTEM START-UP. REFER TO SPECIFICATIONS FOR ADDITIONAL DETAILS.

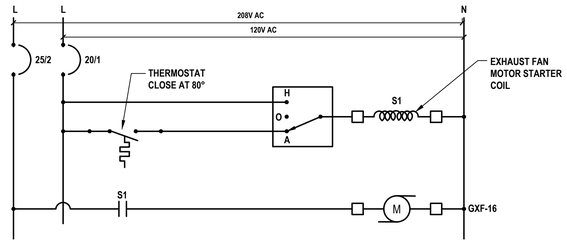

2 GXF-16 Control Panel (GXF16CP) Ventilation Control Diagram

SCALE:NTS

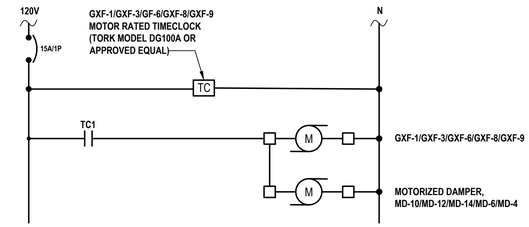

3 GXF-1/GXF-3/GXF-6/GXF-8/GXF-9 Control Diagram

SCALE: NTS

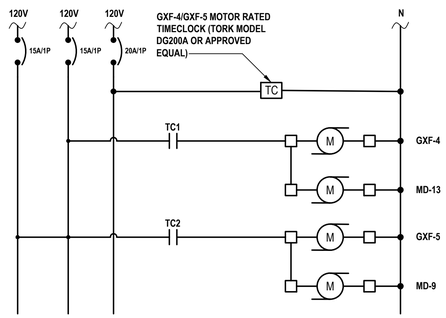

4 GXF-4 and GXF-5 Control Diagram

SCALE: NTS

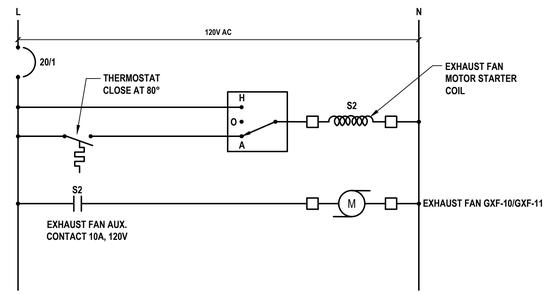

5 GXF-10 and GXF-11 Ventilation Control Diagram

SCALE:NTS

NOTES:

CONTRACTOR TO INTERFACE GX-2 STARTER WITH GAS DETECTOR GDS-2. GX-2 SHALL START WHEN GDS-2 GOES ON HIGH LEVEL ALARM. CONTRACTOR SHALL COORDINATE WITH CONTRACT 'H'.

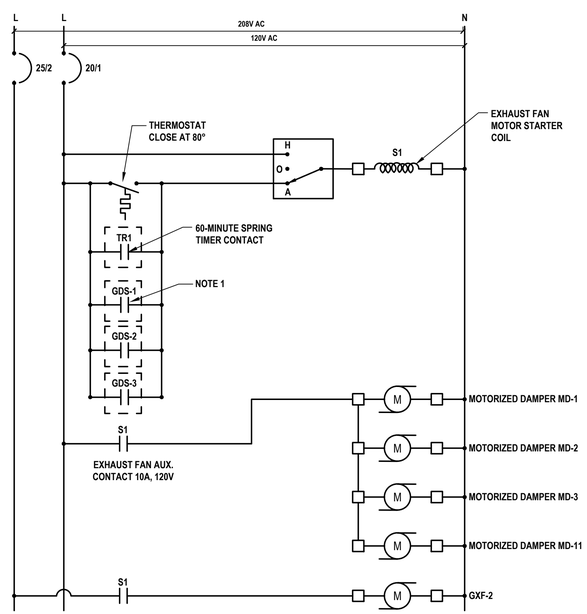

7 GXF-2 Control Panel (GXF2CP) Ventilation Control Diagram

SCALE:NTS

NOTES:

CONTRACTOR TO INTERFACE GXF-2 STARTER WITH GAS DETECTOR GDS-1, GDS-2, AND GDS-3. GXF-2 SHALL START WHEN EITHER GDS-1, GDS-2, OR GDS-3 GOES ON HIGH LEVEL ALARM. CONTRACTOR SHALL COORDINATE WITH CONTRACT 'H'.

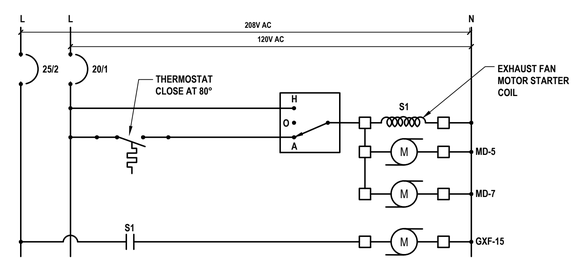

8 GXF-15 Control Panel (GXF15CP) Ventilation Control Diagram

SCALE:NTS

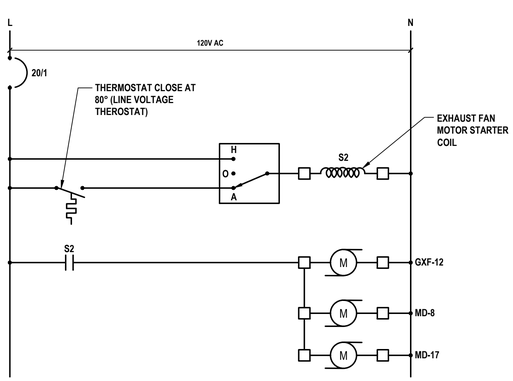

6 GXF-12 Control Panel (GXF12CP) Ventilation Control Diagram

SCALE:NTS

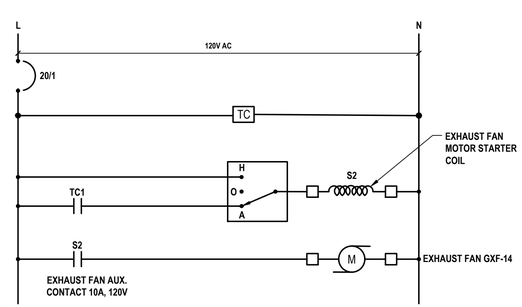

8 GXF-14 Control Panel (GXF14CP) Ventilation Control Diagram

SCALE:NTS

H2M architects + engineers

538 Broad Hollow Road, 4th Floor East
Melville, NY 11747
631.756.8000 • www.h2m.com
NY Architecture & Landscape Architecture: No Certificate Required
NY Engineering Certificate of Authorization No. 0018178

CONSULTANTS:

MARK	DATE	DESCRIPTION

STATE OF NEW YORK · CHARLES J. STARKE · 093837 · LICENSED PROFESSIONAL ENGINEER

7/31/2025
EXP. DATE

CHARLIE J. STARKE, P.E.
NY PROFESSIONAL ENGINEER Lic. No. 093837

"IN ACCORDANCE WITH ARTICLE 145, SECTION 7209 OF THE NYS EDUCATION LAW, ALTERATION OF THIS DOCUMENT EXCEPT BY LICENSE PROFESSIONAL IS ILLEGAL"

DESIGNED BY:	DRAWN BY:	CHECKED BY:	REVIEWED BY:
VLV/INP	INP	VLV	CJS

PROJECT No.:	DATE:	SCALE:
TRFD 2302	FEBRUARY 2025	AS SHOWN

CLIENT

THIELLS ROSEVILLE FIRE DISTRICT

NEW 26-100 FIRE HEADQUARTERS

THIELLS 26 FD

65 W RAMAPO RD
GARNERVILLE, NY 10923

CONTRACT

CONTRACT E
ELECTRICAL CONSTRUCTION

STATUS

SHEET TITLE

ELECTRICAL DETAILS
SHEET NO. 2

DRAWING No.

E 501.00

X:\TRFD\Thiells Roseville Fire District\TRFD2302 (New Fire Station)\02-BIM-CADD\Civil\Civil15 Electric\E 501.00 - Electrical Details 2.dwg Last Modified: Feb 24, 2025 - 11:13am Plotted on: Feb 25, 2025 - 2:33pm By: lhussain

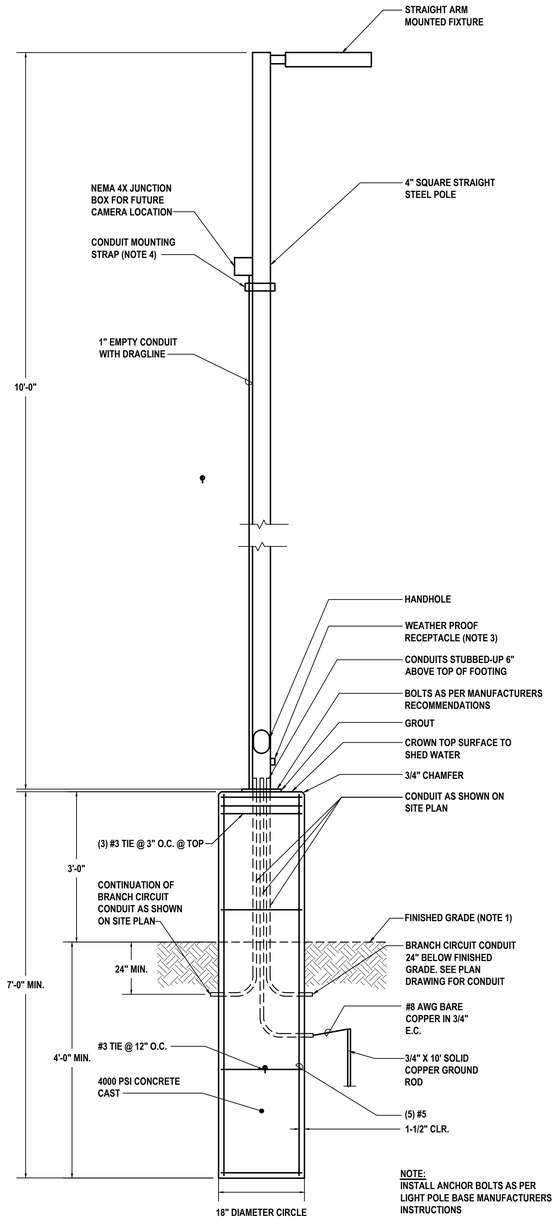

1 Single Fixture Round Straight Light Pole Detail

SCALE:NTS

NOTES:

1. WHERE GRADE IS SLOPED ALONG POLE BASE, MEASUREMENT IS FROM LOWEST GRADE ELEVATION ALONG BASE TO BOTTOM OF BASE. OVERALL BASE HEIGHT WILL VARY BASED ON GRADE CHANGES.
2. CONTRACTOR TO FIELD VERIFY EXACT MOUNTING HEIGHT OF JUNCTION BOX FOR FUTURE CAMERA WITH OWNER'S SECURITY INSTALLER.
3. CONTRACTOR SHALL COORDINATE WITH OWNER FOR EXACT MOUNTING HEIGHT OF OUTDOOR RECEPTACLE WITH OWNER.
4. CONTRACTOR SHALL PROVIDE ALL REQUIRED MOUNTING HARDWARE TO SECURELY FASTEN FUTURE CCTV WIRING CONDUIT ON LIGHT POLE.

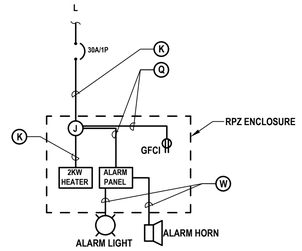

2 RPZ Enclosure Heater and Alarm Detail

SCALE: NTS

NOTES:

1. REFER TO SHEET E 610 FOR WIRING AND CONDUIT SCHEDULE.

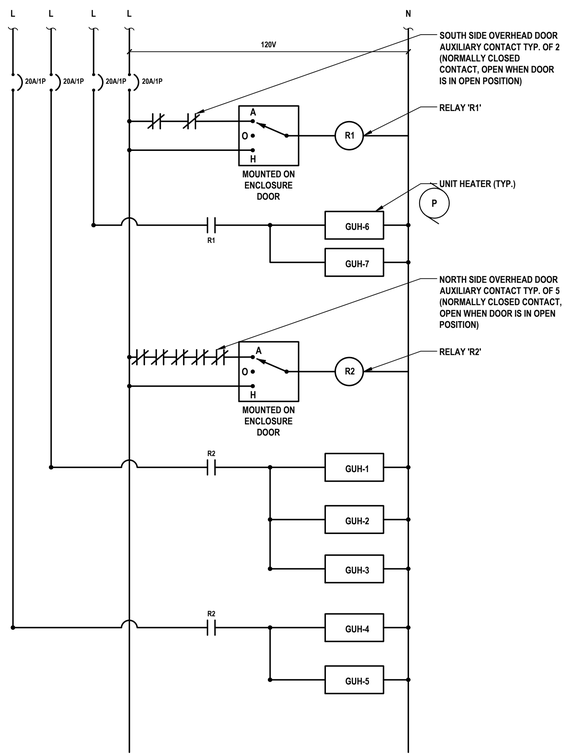

3 Apparatus Bay Unit Heaters Control Panel Schematic (UHCP)

SCALE: NTS

NOTES:

1. CONTRACTOR SHALL PROVIDE ALL REQUIRED RELAYS, CONTACTORS, CONTROL TRANSFORMERS, FUSES, HARDWARE, AND ACCESSORIES REQUIRED FOR COMPLETE CONTROL SYSTEM IN NEMA 1 ENCLOSURE.

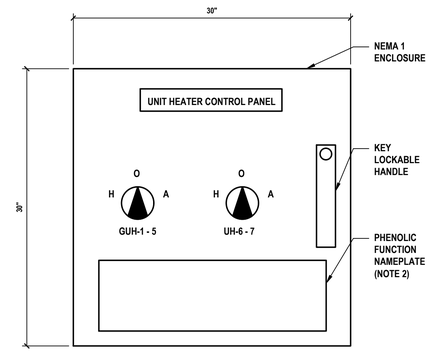

4 UHCP Elevation

SCALE: NTS

NOTES:

1. **PHENOLIC NAMEPLATE:**
   FOR UHCP: UNIT HEATERS SHALL BE SHUT OFF AND PREVENTED FROM RUNNING WHEN APPARATUS ROOM OVERHEAD DOORS ARE IN OPEN POSITION.

H2M architects + engineers

538 Broad Hollow Road, 4th Floor East
Melville, NY 11747
631.756.8000 • www.h2m.com
NY Architecture & Landscape Architecture: No Certificate Required
NY Engineering Certificate of Authorization No. 0018178

CONSULTANTS:

MARK	DATE	DESCRIPTION

STATE OF NEW YORK · CHARLES J. STARKE · 093837 · LICENSED PROFESSIONAL ENGINEER

7/31/2025
EXP. DATE

CHARLIE J. STARKE, P.E.
NY PROFESSIONAL ENGINEER Lic. No. 093837
"IN ACCORDANCE WITH ARTICLE 145, SECTION 7209 OF THE NYS EDUCATION LAW, ALTERATION OF THIS DOCUMENT EXCEPT BY LICENSE PROFESSIONAL IS ILLEGAL"

DESIGNED BY:	DRAWN BY:	CHECKED BY:	REVIEWED BY:
VLV/INP	INP	VLV	CJS

PROJECT No.:	DATE:	SCALE:
TRFD 2302	FEBRUARY 2025	AS SHOWN

CLIENT

THIELLS ROSEVILLE FIRE DISTRICT

NEW 26-100 FIRE HEADQUARTERS

65 W RAMAPO RD
GARNERVILLE, NY 10923

CONTRACT

CONTRACT E
ELECTRICAL CONSTRUCTION

STATUS

SHEET TITLE

ELECTRICAL DETAILS
SHEET NO.3

DRAWING No.

E 502.00

X:\TRFD\Thiells Roseville Fire District\TRFD2302 New Fire Station\02-BIM-CADD\Con-Docs\15 Electric\E 502.00 - Electrical Details 3.dwg Last Modified: Feb 19, 2025 - 8:55am Plotted on: Feb 25, 2025 - 2:22pm By:Hussein

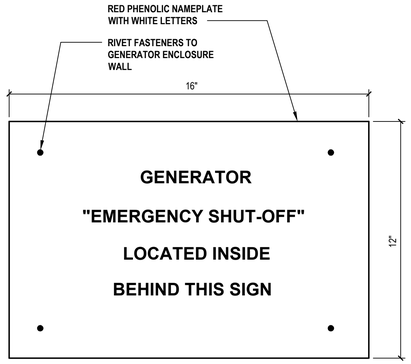

1 Emergency Shut-Off Name Plate
SCALE:NTS

NOTE:

1. "NO SMOKING" SIGNS SHALL BE PLACED CONSPICUOUSLY AT ALL ENTRANCES TO PREMISES.

2 No Smoking Sign Detail
SCALE:NTS

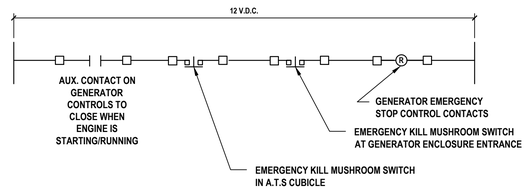

3 Generator Emergency Shut Off Control Circuit
SCALE:NTS

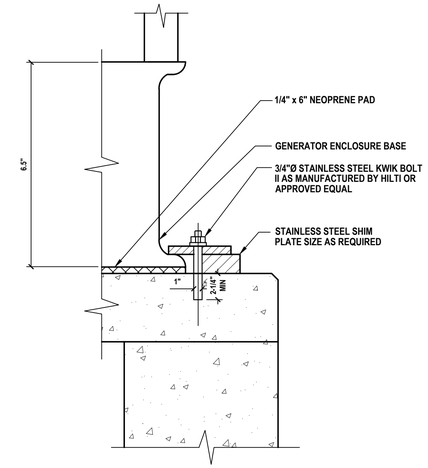

4 Generator Enclosure Anchoring Detail
SCALE:NTS

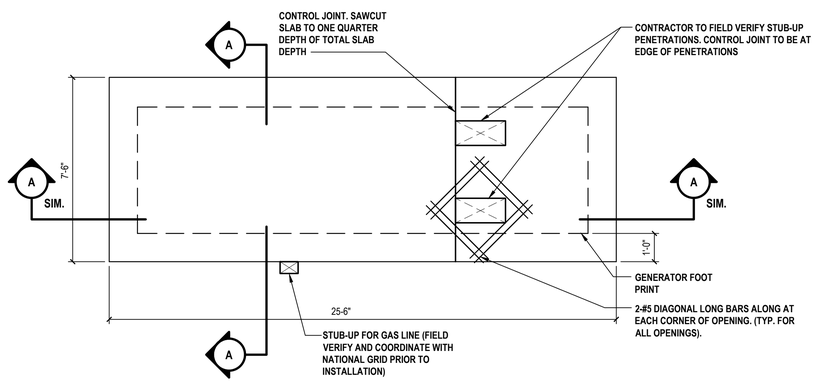

5 Generator Pad Plan
SCALE:N.T.S.

NOTES:

1. PAD DIMENSION BASED ON SPECIFIED EQUIPMENT. 1'-0" MIN ALL AROUND

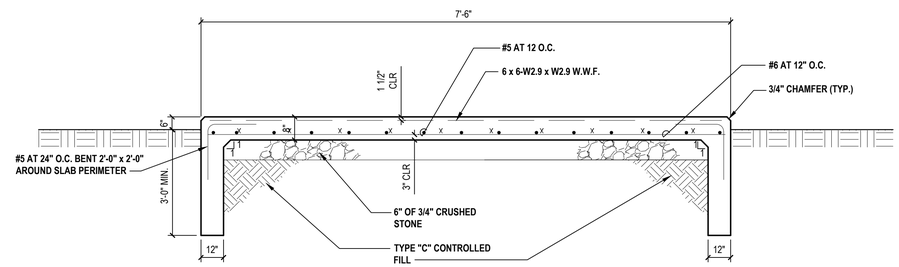

6 Section A-A
SCALE:N.T.S.

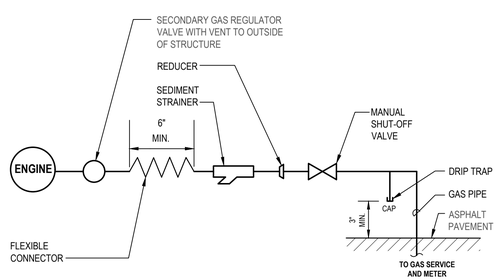

7 Fuel Supply Schematic
SCALE:NTS

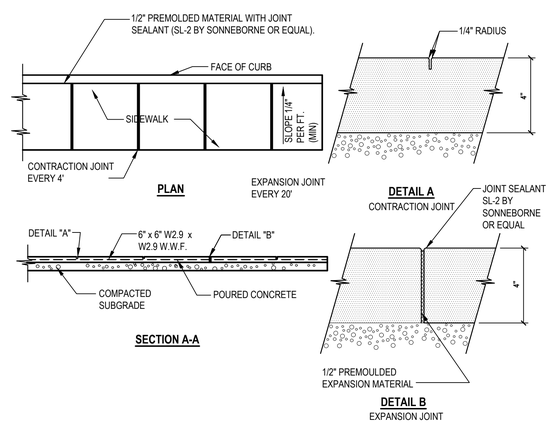

8 Concrete Sidwalk Details
SCALE:NTS

H2M architects + engineers

538 Broad Hollow Road, 4th Floor East
Melville, NY 11747
631.756.8000 • www.h2m.com
NY Architecture & Landscape Architecture: No Certificate Required
NY Engineering Certificate of Authorization No. 0018178

CONSULTANTS:

MARK	DATE	DESCRIPTION

STATE OF NEW YORK · CHARLIE J. STARKE · 093837 · LICENSED PROFESSIONAL ENGINEER

7/31/2025
EXP. DATE

CHARLIE J. STARKE, P.E.
NY PROFESSIONAL ENGINEER Lic. No. 093837

"IN ACCORDANCE WITH ARTICLE 145, SECTION 7209 OF THE NYS EDUCATION LAW, ALTERATION OF THIS DOCUMENT EXCEPT BY LICENSE PROFESSIONAL IS ILLEGAL"

DESIGNED BY:	DRAWN BY:	CHECKED BY:	REVIEWED BY:
VLV/INP	INP	VLV	CJS

PROJECT No.:	DATE:	SCALE:
TRFD 2302	FEBRUARY 2025	AS SHOWN

CLIENT

THIELLS ROSEVILLE FIRE DISTRICT

NEW 26-100 FIRE HEADQUARTERS

THIELLS 26 FD

65 W RAMAPO RD
GARNERVILLE, NY 10923

CONTRACT

CONTRACT E
ELECTRICAL CONSTRUCTION

STATUS

SHEET TITLE

ELECTRICAL
GENERATOR DETAILS

DRAWING No.

E 540.00

X:\TRFD\Thiells Roseville Fire Station\02.BIM-CADD\Con-Docs\15 Electric\E 540.00 - GENERATOR DETAILS.dwg Last Modified: Feb 12, 2025 - 2:14pm Plotted on: Feb 25, 2025 - 2:32pm By Hussain

LIGHTING FIXTURE SCHEDULE

DESIGNATION	SYMBOL	MANUFACTURER	MODEL NUMBER	TYPE	WATTS	COLOR TEMPERATURE	VOLTAGE	LUMENS	MOUNTING	REMARKS	MOUNTING HEIGHT
F1		COOPER LIGHTING	S124DR-S795D835-FTG4F0-1-UDD-D-CP-W	LED	27W	3500K	UNV	3203	RECESSED	NOTES 1	CEILING
F1E		COOPER LIGHTING	S124DR-S795D835-FTG4F0-1B2-UDD-D-CP-W	LED	27W	3500K	UNV	3203	RECESSED	NOTES 1, 2	CEILING
F2		COOPER LIGHTING	S1122DP-C675D835-C4JB10F0-1-UDD-L-C	LED	67W	3500K	UNV	6968	PENDANT/U.O.N	NOTES 1	MOUNT AT 12'-0" A.F.F. / U.O.N
F2E		COOPER LIGHTING	S1122DP-C675D835-C4JB10F0-1B3-UDD-L-C	LED	67W	3500K	UNV	6968	PENDANT	NOTES 1, 2	MOUNT AT 12'-0" A.F.F.
F3		COOPER LIGHTING	HCDQ425D010-HM30525835-41SQMW	LED	28W	3500K	UNV	2500	RECESSED	NOTE 1	CEILING
F3E		COOPER LIGHTING	HCDQ425D010EM14-HM30525835-41SQMW-41SQ MWIEM	LED	28W	3500K	UNV	2500	RECESSED	NOTES 1, 2	CEILING
F4		TEMPO ARCHITECTURAL	PFXC-CW-0-120E8-35WH-6	LED	30W	3500K	UNV	5696	COVE		COORDINATE W/ARCH
F4A		TEMPO ARCHITECTURAL	PFXC-CW-0-120E8-35WH-4	LED	20W	3500K	UNV	5696	COVE		COORDINATE W/ARCH
F5		COOPER LIGHTING	S124DRP-S350835-FSR24F8-1-UDD-A-W	LED	74W	3500K	UNV	8954	RECESSED	NOTE 1	CEILING PERIMETER
F6E		COOPER LIGHTING	S124DRP-S350D835-FTG12F0-1B2-UDD-F-W	LED	36W	3500K	UNV	4200	RECESSED	NOTES 1, 2	CEILING
F7		COOPER LIGHTING	L815MED30WF935MB	LED	38W	3500K	UNV	2700	TRACK	NOTE 1	COORDINATE WITH ARCH
F8		COOPER LIGHTING	S124DIP-C1195D590U835-C10JB8F0-1-UDD-F4-S	LED	85W	3500K	UNV	9560	PENDANT	NOTE 1	MOUNT AT 18'-3" A.F.F.
F8E		COOPER LIGHTING	S124DIP-C1195D590U835-C10JB8F0-1B2-UDD-F4-S	LED	85W	3500K	UNV	9560	PENDANT	NOTES 1,2	MOUNT AT 18'-3" A.F.F.
F9		COOPER LIGHTING	S124DIW-C1195D770U835-8F0-1-UDD-A1-S	LED	85W	3500K	UNV	10540	WALL	NOTE 1	MOUNT AT 15'-0" A.F.F.
F9E		COOPER LIGHTING	S124DIW-C1195D770U835-8F0-1-UDD-A1-S	LED	85W	3500K	UNV	10540	WALL	NOTES 1, 2	MOUNT AT 15'-0" A.F.F.
F10		COOPER LIGHTING	S124DIP-C795D365U835-C4JB4F0-1-UDD-F4-S	LED	27W	3500K	UNV	3537	PENDANT	NOTE 1	MOUNT AT 7'-4" A.F.F.
F10E		COOPER LIGHTING	S124DIP-C795D365U835-C4JB4F0-1B2-UDD-F4-S	LED	27W	3500K	UNV	3537	PENDANT/U.O.N	NOTES 1,2	MOUNT AT 7'-4" A.F.F./ U.O.N
F11		COOPER LIGHTING	22CGTX-35-L835	LED	28W	3500K	UNV	3422	RECESSED	NOTE 2	CEILING
F11E		COOPER LIGHTING	22CGTX-35-L835	LED	28W	3500K	UNV	3422	RECESSED	NOTES 1, 2	CEILING
F12A		COOPER LIGHTING	S124DR-S350D835-FSR4F0-1-UDD-F-W	LED	12W	3500K	UNV	1452	RECESSED	NOTE 1	MOUNT AT 8'-6" A.F.F.
F12B		COOPER LIGHTING	S124DR-S350D835-FSR7F0-1B2-UDD-F-W	LED	21W	3500K	UNV	2541	RECESSED	NOTE 1	MOUNT AT 8'-6" A.F.F.
F13A		COOPER LIGHTING	S124DR-S350D835-FSR17F4-1-UDD-F-W	LED	52W	3500K	UNV	6292	RECESSED	NOTE 1	MOUNT AT 9'-0" A.F.F.
F13B		COOPER LIGHTING	S124DR-S350D835-FSR5F2-1B2-UDD-F-W	LED	15W	3500K	UNV	1815	RECESSED	NOTE 1	MOUNT AT 9'-0" A.F.F.
F14A		COOPER LIGHTING	S124DR-S350D835-FSR20F0-1B2-UDD-F-W	LED	60W	3500K	UNV	2420	RECESSED	NOTE 1	MOUNT AT 8'-6" A.F.F.
F14B		COOPER LIGHTING	S124DR-S350D835-FSR6F0-1-UDD-F-W	LED	18W	3500K	UNV	726	RECESSED	NOTE 1	MOUNT AT 8'-6" A.F.F.
F14C		COOPER LIGHTING	S124DR-S350D835-FSR8F0-1-UDD-F-W	LED	24W	3500K	UNV	968	RECESSED	NOTE 1	MOUNT AT 8'-6" A.F.F.
F15A		COOPER LIGHTING	S124DR-S350D835-FSR8F0-1B2-UDD-F-W	LED	60W	3500K	UNV	2420	PENDANT	NOTE 1	MOUNT AT 9'-8" A.F.F.
F15B		COOPER LIGHTING	S124DR-S350D835-FSR14F0-1-UDD-F-W	LED	11W	3500K	UNV	1694	SURFACE	NOTE 1	MOUNT AT 9'-8" A.F.F.
F15C		COOPER LIGHTING	S124DR-S350D835-FSR9F4-UDD-F-W	LED	27W	3500K	UNV	1129	SURFACE	NOTE 1	MOUNT AT 9'-8" A.F.F.
F15D		COOPER LIGHTING	S124DR-S350D835-FSR6F0-UDD-F-W	LED	14W	3500K	UNV	726	SURFACE	NOTE 1	MOUNT AT 9'-8" A.F.F.

LIGHTING SCHEDULE NOTES:

1. LED FIXTURE WITH DIMMING DRIVER.
2. PROVIDE 90 MINUTES OF BATTERY BACKUP.
3. LIGHT POLE SHALL BE SECURELY MOUNTED ON TOP OF LIGHT POLE BASE.
4. CONTRACTOR SHALL PROVIDE ALL WIRING AND ACCESSORIES AS REQUIRED TO SECURELY MOUNT FLAG POLE LIGHT FIXTURE AT GRADE. MOUNT THE FIXTURE IN SUCH THAT IT ONLY POINTS TO THE FLAG. CONFIRM EXACT LIGHT POLE FIXTURE INSTALLATION LOCATION IN FIELD WITH ARCHITECT/ ENGINEER.
5. PROVIDE ALL HARDWARE AND ACCESSORIES AS REQUIRED TO SAFELY INSTALL POLE MOUNTED LIGHT FIXTURE.

H2M architects + engineers

538 Broad Hollow Road, 4th Floor East
Melville, NY 11747
631.756.8000 • www.h2m.com
NY Architecture & Landscape Architecture: No Certificate Required
NY Engineering Certificate of Authorization No.: 0018178

CONSULTANTS:

MARK	DATE	DESCRIPTION

STATE OF NEW YORK · CHARLES J. STARKE · 093857 · LICENSED PROFESSIONAL ENGINEER

7/31/2025
Exp. Date

CHARLIE J. STARKE, P.E.
NY PROFESSIONAL ENGINEER Lic. No. 093857

"IN ACCORDANCE WITH ARTICLE 145, SECTION 7209 OF THE NYS EDUCATION LAW, ALTERATION OF THIS DOCUMENT EXCEPT BY A LICENSED PROFESSIONAL IS ILLEGAL"

DESIGNED BY:	DRAWN BY:	CHECKED BY:	REVIEWED BY:
VLV/ISH	ISH	VLV	CJS

PROJECT No:	DATE:	SCALE:
TRFD 2302	FEBRUARY 2025	AS SHOWN

CLIENT

THIELLS ROSEVILLE FIRE DISTRICT

NEW 26-100 FIRE HEADQUARTERS

THIELLS 26 FD

65 W RAMAPO ROAD GARNERVILLE, NY 10923

CONTRACT

CONTRACT E ELECTRICAL CONSTRUCTION

STATUS

FINAL BID DOCUMENT

SHEET TITLE

ELECTRICAL SCHEDULES

DRAWING No.

E 600.00

C:\Users\ihussain\Documents\TRFD2302_Central23-M_IhussainEBT65.rvt
2/25/2025 2:00:09 PM

LIGHTING FIXTURE SCHEDULE CONTINUED

DESIGNATION	SYMBOL	MANUFACTURER	MODEL NUMBER	TYPE	WATTS	COLOR TEMPERATURE	VOLTAGE	LUMENS	MOUNTING	REMARKS	MOUNTING HEIGHT
F16A		LEDGE	0-09-I-35K-NG-1-66-3-3	LED	6W	4200K	UNV	457	SURFACE		COORDINATE W/ CONTRACT G
F16B		LEDGE	0-09-I-35K-NG-1-54-3-3	LED	5W	4200K	UNV	374	SURFACE		COORDINATE W/ CONTRACT G
F16C		LEDGE	0-09-I-35K-NG-1-48-3-3	LED	4W	4200K	UNV	332	SURFACE		COORDINATE W/ CONTRACT G
F17		KIM LIGHTING	EL807/9L4KUV-DB	LED	11W	4200K	UNV	188	WALL		2'0" A.F.G.
F18		KIM LIGHTING	RN-R-91-6-5-4K8-SM-DL-UNV-D	LED	38W	4000K	UNV	3000	RECESSED		COORDINATE W/ CONTRACT G
F19		WAC LIGHTING	T24-CC1-05-WT	LED	24W	3500K	UNV	1370	WALL	W/ (CTR-WDMX-3CH), (PS-24DC-U300R) AND (LED-WCT-WT)	COORDINATE W/ CONTRACT G
F20		KIM LIGHTING	EL700F3/9L4KUV-DB-AGS72DB-DS73	LED	11W	4200K	UNV	4858	POLE	NOTE 4	IN GROUND
F21		KIM LIGHTING	FN1-12L-U-4K-DBS	LED	27W	4200K	UNV	635	SURFACE		3'-0" A.F.G
POLE FOR F22		CURRENT LIGHTING	PS4-4S10-125-10-BLT-FS1	LED	24W	3500K	UNV			NOTE 3	
F22A		KIM LIGHTING	VP-1-160L-35-4K7-4F-UNV-ASQU-BLT	LED	35W	4000K	UNV	5500	POLE		13'-0" A.F.G
F22B		KIM LIGHTING	VP-ST-1-39L-39-4K7-4F-UNV-ASQU-BLT-SHD-1-HSS-90-B-BLT	LED	40W	4000K	UNV	5500	POLE	NOTE 2	13'-0" A.F.G
F23E		CONCEALITE	F5-8-90-TBAR	LED	8W		UNV		SURFACE	NOTE 2	CEILING
EX-1		COOPER LIGHTING	ACXN0R	LED	3W		120V		CEILING	NOTE 2	CEILING
EX-2		COOPER LIGHTING	XLA2-8DR1-ES-WH-GXB	LED	3W		120V		WALL/SURFACE	NOTE 2	0'-6" ABOVE FINISHED DOOR

LIGHTING SCHEDULE NOTES:

1. LED FIXTURE WITH DIMMING DRIVER.
2. PROVIDE 90 MINUTES OF BATTERY BACKUP.
3. LIGHT POLE SHALL BE SECURELY MOUNTED ON TOP OF LIGHT POLE BASE.
4. CONTRACTOR SHALL PROVIDE ALL WIRING AND ACCESSORIES AS REQUIRED TO SECURELY MOUNT FLAG POLE LIGHT FIXTURE AT GRADE. MOUNT THE FIXTURE IN SUCH THAT IT ONLY POINTS TO THE FLAG. CONFIRM EXACT LIGHT POLE FIXTURE INSTALLATION LOCATION IN FIELD WITH ARCHITECT/ ENGINEER.
5. PROVIDE ALL HARDWARE AND ACCESSORIES AS REQUIRED TO SAFELY INSTALL POLE MOUNTED LIGHT FIXTURE.

DISCONNECT SWITCH SCHEDULE

DISCONNECT SWITCH IDENTIFICATION	TYPE	ENCLOSURE	VOLTS	POLES	FRAME SIZE AMPS	FUSE RATING
DS1	UNFUSED	NEMA 3R	240V	3	100 A	-
DS2	UNFUSED	NEMA 3R	240V	3	60 A	-
DS3	UNFUSED	NEMA 3R	240V	2	30 A	-
DS4	UNFUSED	NEMA 1	240V	3	30 A	-

MOTOR STARTER SCHEDULE

IDENTIFICATION	NEMA SIZE	Voltage/Phase	Frame Size (Current)	ENCLOSURE TYPE	ACCESSORIES
S1	0	208/1	30 A	NEMA 1	H-O-A SWITCH, RUN AND OVERLOAD LIGHT
S2	0	120/1	30 A	NEMA 1	H-O-A SWITCH, RUN AND OVERLOAD LIGHT

TRANSFER SWITCH SCHEDULE

TRANSFER SWITCH IDENTIFICATION	TYPE	ENCLOSURE	VOLTS	PHASE	POLES	AMPS
ATS1	AUTOMATIC	NEMA 1	208	3	4	1000

LIGHTING CONTROLS SCHEDULE

TYPE	MANUFACTURER	MODEL NUMBER	VOLTAGE	MOUNTING	MOUNTING HEIGHT	REMARKS
OS / VS	HUBBELL	NXOS-OMDT2R	CONTROL VOLTAGE	SURFACE	CEILING	OS DENOTES OCCUPANCY SENSOR AND VS DENOTES VACANCY SENSOR FOR USE IN ROOMS WITH 'RC'
NX-HM OS	HUBBELL	NXSMP2-HMO	CONTROL VOLTAGE	SURFACE	CEILING	NX-HM OS DENOTES HIGH MOUNT OCCUPANCY SENSOR FOR ROOMS WITH 'RC-HM'
RC	HUBBELL	NXRC2-2RD	LINE VOLTAGE	AFC	AFC	ROOM CONTROLLER
RC HM	HUBBELL	NXFM2-1R2D-O-UNV	LINE VOLTAGE	AFC	AFC	HIGH MOUNT ROOM CONTROLLER
RL	HUBBELL	ALCR1277	LINE VOLTAGE	AFC	AFC	UL924 EMERGENCY LOAD CONTROL RELAY
$S_{OSD/VSD}$	HUBBELL	LHRDMMTS2-N	LINE VOLTAGE	WALL	46" AFF	LINE VOLTAGE DIMMER SWITCH WITH OCCUPANCY/VACANCY SENSOR
S_{LVD}	HUBBELL	NXSW-ORLO	CONTROL VOLTAGE	WALL	46" AFF	LOW VOLTAGE DIMMER SWITCH FOR USE IN ROOMS WITH 'RC'
S_{LV}	HUBBELL	NXSW-1	CONTROL VOLTAGE	WALL	46" AFF	LOW VOLTAGE SWITCH FOR USE IN ROOMS WITH 'RC'
S_{LVK}	HUBBELL	NXSW2-KEY	CONTROL VOLTAGE	WALL	46" AFF	LOW VOLTAGE KEY SWITCH FOR USE IN ROOMS WITH 'RC'
$S_{OS/VS}$	HUBBELL	LHMTS1-G	LINE VOLTAGE	WALL	46" AFF	LINE VOLTAGE OCCUPANCY/VACANCY SWITCH
	HUBBELL	NXP2-EIT-8-NNSP-UNV-S	LINE VOLTAGE	WALL	46" AFF	EXTERIOR LIGHTING CONTROL PANEL 'ELCP'

* CONTRACTOR SHALL COORDINATE ALL DEVICE COLORS AND FACEPLATES WITH ARCHITECT/OWNER IN FIELD.

LIGHTING CONTROL NOTES:

LC1. CONTRACTOR SHALL PROVIDE ALL MATERIALS AND ACCESSORIES AS REQUIRED TO PROVIDE FULL FUNCTIONING LIGHTING CONTROL SYSTEM TO FUNCTION AS SHOWN IN THE CONSTRUCTION DOCUMENTS. DESIGN OF THE LIGHTING CONTROL SYSTEM WAS DEVELOPED AROUND THE HUBBELL CONTROL SYSTEM. ALL SUBSTITUTE CONTROLS WILL REQUIRE SUBMISSION OF NEW CONTROL LAYOUT, STAMPED BY A PROFESSIONAL ENGINEER. SUBSTITUTE CONTROLS SHALL FUNCTION AS DESIGNED ON THE CONTRACT DOCUMENTS AND CONTRACTOR SHALL GUARANTEE FUNCTIONALITY.

LC2. CONTRACTOR SHALL REFER TO CONTRACT DRAWINGS FOR SPECIFIC OUTPUT CONTROLS, AND DIMMING REQUIRED FOR ROOM CONTROLLER.

LC3. ALL SWITCHES AND SWITCH BANKS TYPES SHALL BE COORDINATED WITH THE ENGINEER/DISTRICT IN FIELD.

LC4. BLUETOOTH RADIO CONTROL MODULE SHALL BE PROVIDED FOR ALL ROOM CONTROLLERS ASSOCIATED. CONTRACTOR SHALL PROVIDE ONE (1) ADDITIONAL BLUETOOTH MODULE TO THE DISTRICT FOR PROGRAMMING.

LC5. CONTRACTOR SHALL COORDINATE WITH OWNER TO PROGRAM ALL SCHEDULES OF LIGHTING CONTROL, FUNCTION OF SWITCHES AND NETWORK CONFIGURATION. CONTROL SHALL PROVIDE TRAINING FOR STAFF ON EACH SHIFT. COORDINATE WITH HUBBELL BUILDING AUTOMATION FOR TRAINING AND PROGRAMMING ASSISTANCE (FIELD SERVICES).

LC6. EMERGENCY LOAD CONTROL RELAY SHALL BE UTILIZED FOR "EM" LIGHT FIXTURES ONLY. IN THE EVENT NORMAL POWER IS LOST, RELAY SHALL SWITCH TO PROVIDE POWER TO "EM" FIXTURES VIA LIGHTING INVERTER. CONTRACTOR SHALL INTEGRATE AND WIRE EMERGENCY LOAD CONTROL RELAY AND "EM" LIGHT FIXTURES WITH LIGHTING INVERTER PER MANUFACTURER'S INSTRUCTIONS FOR COMPLETE LIGHTING CONTROL.

H2M architects + engineers

538 Broad Hollow Road, 4th Floor East
Melville, NY 11747
631.756.8000 • www.h2m.com
NY Architecture & Landscape Architecture: No Certificate Required
NY Engineering Certificate of Authorization No.: 0018178

CONSULTANTS:

MARK	DATE	DESCRIPTION

STATE OF NEW YORK · CHARLES J. STARKE · 093837 · LICENSED PROFESSIONAL ENGINEER

7/31/2025
Exp. Date

CHARLIE J. STARKE, P.E.
NY PROFESSIONAL ENGINEER Lic. No. 093837

"IN ACCORDANCE WITH ARTICLE 145, SECTION 7209 OF THE NYS EDUCATION LAW, ALTERATION OF THIS DOCUMENT EXCEPT BY A LICENSED PROFESSIONAL IS ILLEGAL"

DESIGNED BY:	DRAWN BY:	CHECKED BY:	REVIEWED BY:
VLV/ISH	ISH	VLV	CJS

PROJECT No:	DATE:	SCALE:
TRFD 2302	FEBRUARY 2025	AS SHOWN

CLIENT

THIELLS ROSEVILLE FIRE DISTRICT

NEW 26-100 FIRE HEADQUARTERS

65 W RAMAPO ROAD
GARNERVILLE, NY 10923

CONTRACT

CONTRACT E
ELECTRICAL CONSTRUCTION

STATUS

FINAL BID DOCUMENT

SHEET TITLE

ELECTRICAL SCHEDULES

DRAWING No.

E 601.00

C:\Users\hussain\Documents\TRFD2302_Central23-M_jhussain\EDIT65.rvt
2/25/2025 2:00:09 PM

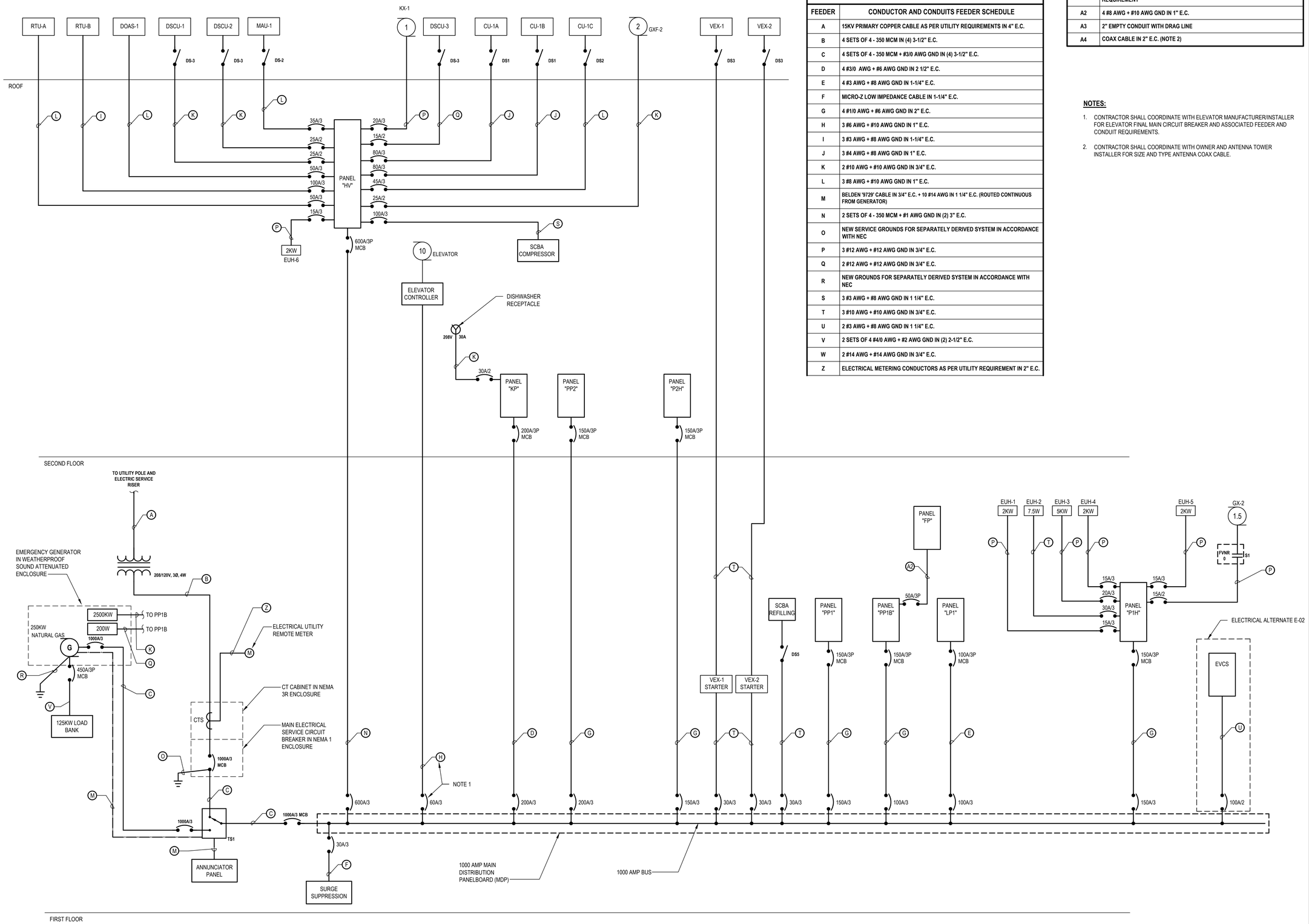

1 **Electrical Single Line Diagram**
SCALE:N.T.S.

FEEDER SCHEDULE

FEEDER	CONDUCTOR AND CONDUITS FEEDER SCHEDULE
A	15KV PRIMARY COPPER CABLE AS PER UTILITY REQUIREMENTS IN 4" E.C.
B	4 SETS OF 4 - 350 MCM IN (4) 3-1/2" E.C.
C	4 SETS OF 4 - 350 MCM + #3/0 AWG GND IN (4) 3-1/2" E.C.
D	4 #3/0 AWG + #6 AWG GND IN 2 1/2" E.C.
E	4 #3 AWG + #8 AWG GND IN 1-1/4" E.C.
F	MICRO-Z LOW IMPEDANCE CABLE IN 1-1/4" E.C.
G	4 #1/0 AWG + #6 AWG GND IN 2" E.C.
H	3 #6 AWG + #10 AWG GND IN 1" E.C.
I	3 #3 AWG + #8 AWG GND IN 1-1/4" E.C.
J	3 #4 AWG + #8 AWG GND IN 1" E.C.
K	2 #10 AWG + #10 AWG GND IN 3/4" E.C.
L	3 #8 AWG + #10 AWG GND IN 1" E.C.
M	BELDEN '9729' CABLE IN 3/4" E.C. + 10 #14 AWG IN 1 1/4" E.C. (ROUTED CONTINUOUS FROM GENERATOR)
N	2 SETS OF 4 - 350 MCM + #1 AWG GND IN (2) 3" E.C.
O	NEW SERVICE GROUNDS FOR SEPARATELY DERIVED SYSTEM IN ACCORDANCE WITH NEC
P	3 #12 AWG + #12 AWG GND IN 3/4" E.C.
Q	2 #12 AWG + #12 AWG GND IN 3/4" E.C.
R	NEW GROUNDS FOR SEPARATELY DERIVED SYSTEM IN ACCORDANCE WITH NEC
S	3 #3 AWG + #8 AWG GND IN 1 1/4" E.C.
T	3 #10 AWG + #10 AWG GND IN 3/4" E.C.
U	2 #3 AWG + #8 AWG GND IN 1 1/4" E.C.
V	2 SETS OF 4 #4/0 AWG + #2 AWG GND IN (2) 2-1/2" E.C.
W	2 #14 AWG + #14 AWG GND IN 3/4" E.C.
Z	ELECTRICAL METERING CONDUCTORS AS PER UTILITY REQUIREMENT IN 2" E.C.

A1	18/2 CABLE WITH PVC JACKET IN 3/4" E.C. OR AS PER MANUFACTURER'S REQUIREMENT
A2	4 #8 AWG + #10 AWG GND IN 1" E.C.
A3	2" EMPTY CONDUIT WITH DRAG LINE
A4	COAX CABLE IN 2" E.C. (NOTE 2)

NOTES:

1. CONTRACTOR SHALL COORDINATE WITH ELEVATOR MANUFACTURER/INSTALLER FOR ELEVATOR FINAL MAIN CIRCUIT BREAKER AND ASSOCIATED FEEDER AND CONDUIT REQUIREMENTS.
2. CONTRACTOR SHALL COORDINATE WITH OWNER AND ANTENNA TOWER INSTALLER FOR SIZE AND TYPE ANTENNA COAX CABLE.

H2M architects + engineers
538 Broad Hollow Road, 4th Floor East
Melville, NY 11747
631.756.8000 • www.h2m.com
NY Architecture & Landscape Architecture: No Certificate Required
NY Engineering Certificate of Authorization No. 0018178

CONSULTANTS:

MARK	DATE	DESCRIPTION

STATE OF NEW YORK · CHARLES J. STARKE · 093837 · LICENSED PROFESSIONAL ENGINEER

7/31/2025
EXP. DATE

CHARLIE J. STARKE, P.E.
NY PROFESSIONAL ENGINEER Lic. No. 093837

"IN ACCORDANCE WITH ARTICLE 145, SECTION 7209 OF THE NYS EDUCATION LAW, ALTERATION OF THIS DOCUMENT EXCEPT BY LICENSE PROFESSIONAL IS ILLEGAL"

DESIGNED BY:	DRAWN BY:	CHECKED BY:	REVIEWED BY:
VLV/INP	INP	VLV	CJS

PROJECT No.:	DATE:	SCALE:
TRFD 2302	FEBRUARY 2025	AS SHOWN

CLIENT

THIELLS ROSEVILLE FIRE DISTRICT

NEW 26-100 FIRE HEADQUARTERS

THIELLS 26 FD

65 W RAMAPO RD GARNERVILLE, NY 10923

CONTRACT

CONTRACT E
ELECTRICAL CONSTRUCTION

STATUS

SHEET TITLE

ELECTRICAL SINGLE LINE DIAGRAM

DRAWING No.

E 610.00

X:\TRFD\Thiells Roseville Fire District\TRFD2302 (New Fire Station)\02-BIM-CADD\Con-Docs\15 Electrical\E 610.00 - Electrical Single Line Diagram.dwg Last Modified: Feb 18, 2025 - 8:34am Plotted on: Feb 25, 2025 - 2:33pm By: lkasash

ABBREVIATIONS:

CL	CONTAINMENT SUMP LEAK PROBE
DL	DISPENSER SUMP LEAK PROBE
ES	EMERGENCY SHUT OFF SWITCH
DP-1	FUEL DISPENSER
FAP-1	FUEL MANAGEMENT SYSTEM
SM-120	SOLENOID CONTROL PANEL
ECH-1	ELECTRICAL CONTROL HEAD
IL	INTERSTITIAL LEAK PROBE
LP	LEVEL PROBE
AAP-1	REMOTE OVERFILL ALARM
SP	SUBMERSIBLE PUMP
TMP	TANK MONITORING PANEL

FEEDER SCHEDULE

FEEDER	CONDUCTOR AND CONDUITS FEEDER SCHEDULE
A	2 #12 AWG + #12 AWG GND IN 3/4" E.C.
B	CAT-6E CABLE IN 3/4" E.C.
C	TYPE, SIZE, AND QUANTITIES OF WIRING SHALL BE IN ACCORDANCE WITH TANK MONITORING PANEL, LEAK DETECTION SYSTEM, AND CARD ACCESS TOWER MANUFACTUERS' AND NEC REQUIREMENTS (POWER AND CONTROL)
D	2 #10 AWG + #10 AWG GND IN 3/4" E.C.

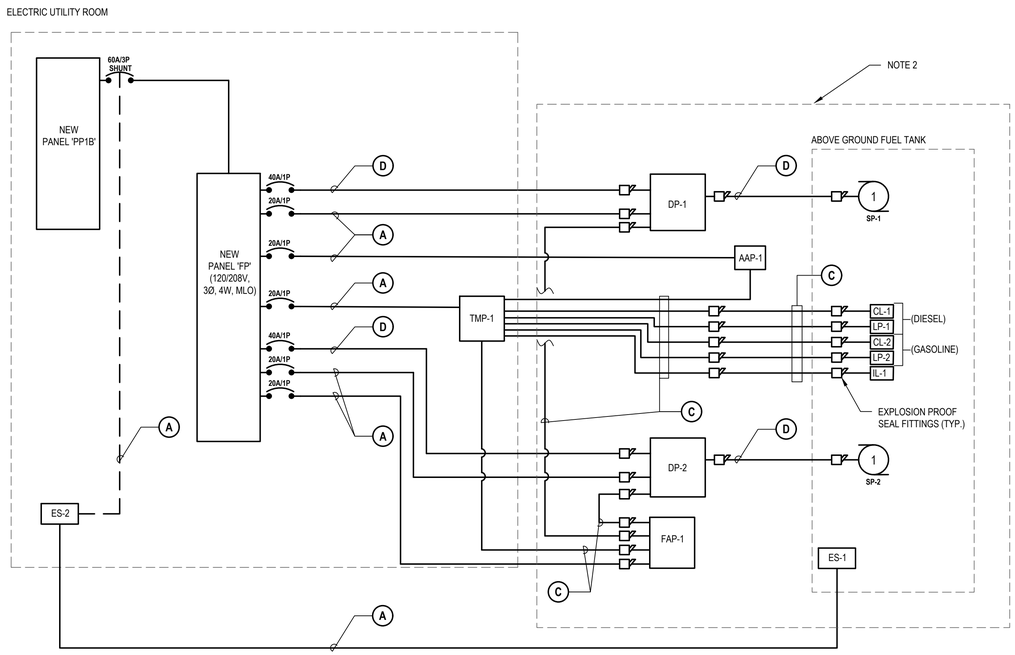

1 **Electrical Single Line Diagram**
SCALE: N.T.S.

NOTES:

1. REFER TO PLUMBING PLANS FOR ADDITIONAL INFORMATION AND LOCATION OF FUEL STATION EQUIPMENT.
2. FUEL DISPENSING AREA ARE CLASSIFIED CLASS 1 DIV 2 HAZARDOUS LOCATION. ALL ELECTRICAL INSTALLATIONS SHALL BE IN ACCORDANCE WITH NEC ARTICLE 514. CONTRACTOR SHALL PROVIDE EXPLOSION PROOF E-Y FITTINGS FOR CONDUIT ENTERING AND EXITING THIS AREA. ANY EQUIPMENT INSTALLED WITHIN 18" OF ANY FUEL TANK OPENING SHALL BE EXPLOSION PROOF RATED.

H2M architects + engineers
538 Broad Hollow Road, 4th Floor East
Melville, NY 11747
631.756.8000 • www.h2m.com
NY Architecture & Landscape Architecture: No Certificate Required
NY Engineering Certificate of Authorization No. 0018178

CONSULTANTS:

MARK	DATE	DESCRIPTION

STATE OF NEW YORK · CHARLES J. STARKE · 093837 · LICENSED PROFESSIONAL ENGINEER

7/31/2025
EXP. DATE

CHARLIE J. STARKE, P.E.
NY PROFESSIONAL ENGINEER Lic. No. 093837

"IN ACCORDANCE WITH ARTICLE 145, SECTION 7209 OF THE NYS EDUCATION LAW, ALTERATION OF THIS DOCUMENT EXCEPT BY LICENSE PROFESSIONAL IS ILLEGAL"

DESIGNED BY:	DRAWN BY:	CHECKED BY:	REVIEWED BY:
VLV/INP	INP	VLV	CJS

PROJECT No.:	DATE:	SCALE:
TRFD 2302	FEBRUARY 2025	AS SHOWN

CLIENT

THIELLS ROSEVILLE FIRE DISTRICT

NEW 26-100 FIRE HEADQUARTERS

65 W RAMAPO RD GARNERVILLE, NY 10923

CONTRACT

CONTRACT E
ELECTRICAL CONSTRUCTION

STATUS

SHEET TITLE

FUELING STATION WIRING DIAGRAM (ALTERNATE E-03)

DRAWING No.

E 611.00

X:\TRFD \Thiells Roseville Fire District\TRFD2302 New Fire Station\02-BIM-CADD\Con-Docs\15 Electric\E 611.00 Fuel Station Single Line Diagram.dwg Last Modified: Feb 12, 2025 - 3:59pm Plotted on: Feb 25, 2025 - 2:33pm By lhasain

Name

Panelboard:	MDP	Voltage:	208Y/120	Phase:	3	Wire	4	A.I.C. Rating:	65000
Manufacturer:	SIEMENS	Mains:	1000A MCB	Mains Rating:	1000 A				
Panel Type:	P5	Mounting:	SURFACE	Options:		Notes:	51.25" BREAKER MOUNTING SPACE		
NEMA Type Enclosure	1								

Load Description	Breaker Option	Trip	Poles	Circ No.	A	B	C	A	B	C	Circ No.	Poles	Trip	Breaker Option	Load Description
				1	46458 VA			12811 VA			2				
HV		600 A	3	3		46063 VA			14967 VA		4	3	100 A		PP1
				5			46125 VA			12787 VA	6				
				7	11720 VA			4533 VA			8				
P1H		150 A	3	9		13874 VA			1780 VA		10	3	100 A		LP1
				11			14230 VA			3245 VA	12				
				13	10285 VA			7520 VA			14				
P2H		100 A	3	15		11337 VA			6950 VA		16	3	200 A		PP2
				17			10265 VA			6481 VA	18				
				19	7562 VA			12352 VA			20				
KP		200 A	3	21		5880 VA			12828 VA		22	3	100 A		PP1B
				23			6064 VA			13696 VA	24				
				25	2005 VA			3603 VA			26				
SCBA REFILLING STATION		30 A	3	27		2005 VA			3603 VA		28	3	60 A		ELEVATOR CONTROLLER
				29			2005 VA			3603 VA	30				
				31	2005 VA			0 VA			32				
VEX-1		30 A	3	33		2005 VA			0 VA		34	3	20 A		VEX-2
				35			2005 VA			0 VA	36				
SPACE	--	--	1	37	--			--			38	1	--	--	SPACE
SPACE	--	--	1	39		--			--		40	1	--	--	SPACE
SPACE	--	--	1	41			--			--	42	1	--	--	SPACE

Connected Totals:	A	120.1 kVA
	B	120.7 kVA
	C	119.9 kVA
Total:		348.2 kVA
Amps		966 A

(All Phases to be balanced to within 7% Actual Load Totals)

Breaker Option

AS - Powerlink AS Breaker
LO - Handle Lock-off Device
ST - Shunt Trip Type
AUX - Auxillary Contacts
PA - Handle Padlock Attchment
GFCI - Ground Fault Circuit Interrupter
HACR - Heating, A/C & Refrigeration
SF - Subfeed
TC - Time Clock Control

Name

Panelboard:	HV	Voltage:	208Y/120	Phase:	3	Wire	4	A.I.C. Rating:	42,000
Manufacturer:		Mains:	600A MCB	Mains Rating:	600 A				
Panel Type:	P2	Mounting:	SURFACE	Options:		Notes:			
NEMA Type Enclosure	1								

Load Description	Breaker Option	Trip	Poles	Circ No.	A	B	C	A	B	C	Circ No.	Poles	Trip	Breaker Option	Load Description
				1	4563 VA			9393 VA			2				
RTU-A	HACR	50 A	3	3		4563 VA			9393 VA		4	3	100 A	HACR	RTU-B
				5			4563 VA			9393 VA	6				
				7	0 VA			6893 VA			8				
DOAS-1	HACR	20 A	3	9		0 VA			6893 VA		10	3	80 A	HACR	CU-1A
				11			0 VA			6893 VA	12				
				13	6893 VA			4397 VA			14				
CU-1B	HACR	80 A	3	15		6893 VA			4397 VA		16	3	45 A	HACR	CU-1C
				17			6893 VA			4397 VA	18				
DSCU-1	HACR	25 A	2	19	1665 VA			342 VA			20	1	20 A	HACR	GFXF-13, GXF-5
				21		1665 VA			667 VA		22				
GXF-2	HACR	25 A	2	23			1300 VA			667 VA	24	3	20 A	HACR	EUH-6
				25	1300 VA			667 VA			26				
				27		2000 VA			540 VA		28	1	20 A		ROOF CONV. RECEPTACLES
MAU-1	HACR	35 A	3	29			2000 VA			1560 VA	30	2	20 A	HACR	DSCU-3
				31	2000 VA			1560 VA			32				
DSCU-2	HACR	25 A	2	33		1665 VA			600 VA		34	1	20 A		WH-1
				35			1665 VA			6184 VA	36				
				37	2005 VA			6184 VA			38	3	100 A		SCBA REMOTE COMPRESSOR
COMPRESSOR AC-1		30 A	3	39		2005 VA			6184 VA		40				
				41			2005 VA			1 VA	42	1	20 A		RECIRC PUMPS
SPARE	--	20 A	1	43	0 VA			0 VA			44	1	20 A	--	SPARE
SPARE	--	20 A	1	45		0 VA			0 VA		46	1	20 A	--	SPARE
SPARE	--	20 A	1	47			0 VA			0 VA	48	1	20 A	--	SPARE
SPARE	--	20 A	1	49	0 VA			0 VA			50	1	20 A	--	SPARE
SPARE	--	20 A	1	51		0 VA			0 VA		52	1	20 A	--	SPARE
SPARE	--	20 A	1	53			0 VA			0 VA	54	1	20 A	--	SPARE

Connected Totals:	A	46.5 kVA
	B	46.1 kVA
	C	46.1 kVA
Total:		138.6 kVA
Amps:		385 A

(All Phases to be balanced to within 7% Actual Load Totals)

Breaker Option

AS - Powerlink AS Breaker
LO - Handle Lock-off Device
ST - Shunt Trip Type
AUX - Auxillary Contacts
PA - Handle Padlock Attchment
GFCI - Ground Fault Circuit Interrupter
HACR - Heating, A/C & Refrigeration
SF - Subfeed
TC - Time Clock Control

Name

Panelboard:	KP	Voltage:	208Y/120	Phase:	3	Wire	4	A.I.C. Rating:	22,000
Manufacturer:	SIEMENS	Mains:	200A MCB	Mains Rating:	200 A				
Panel Type:	P1	Mounting:	SURFACE	Options:		Notes:			
NEMA Type Enclosure	1								

Load Description	Breaker Option	Trip	Poles	Circ No.	A	B	C	A	B	C	Circ No.	Poles	Trip	Breaker Option	Load Description
FREEZER RECEPTACLE		20 A	1	1	632 VA			1680 VA			2	1	20 A		REFRIDGERATOR REC
ISLAND CEILING RECEPTACLES		20 A	1	3		360 VA			360 VA		4	1	20 A		COUNTER TOP RECEPTACLES
MICROWAVE RECEPTACLE		20 A	1	5			1452 VA			540 VA	6	1	20 A		KITCHEN 201/ PANTRY 201A...
				7				2990 VA			8				
				9					2990 VA		10	3	0 A		DISHWASHER
DUAL FRIDGE/FREEZER REC		20 A	1	11			1082 VA			2990 VA	12				
DUAL FRIDGE/FREEZER REC		20 A	1	13	780 VA			480 VA			14	1	20 A		MEAT SLICER REC
COFFEE MAKER REC		20 A	1	15		1670 VA					16				
SPARE	--	20 A	1	17			0 VA				18				
KITCHENHOOD KH-1		20 A	1	19	500 VA			500 VA			20	2	20 A		COFFEE MAKER RECEPTACLE
SPARE	--	20 A	1	21		0 VA			500 VA		22				
SPARE	--	20 A	1	23			0 VA			0 VA	24	1	20 A	--	SPARE
SPARE	--	20 A	1	25	0 VA			0 VA			26	1	20 A	--	SPARE
SPARE	--	20 A	1	27		0 VA			0 VA		28	1	20 A	--	SPARE
SPARE	--	20 A	1	29			0 VA			0 VA	30	1	20 A	--	SPARE
SPARE	--	20 A	1	31	0 VA			0 VA			32	1	20 A	--	SPARE
SPARE	--	20 A	1	33		0 VA			0 VA		34	1	20 A	--	SPARE
SPARE	--	20 A	1	35			0 VA			0 VA	36	1	20 A	--	SPARE
SPARE	--	20 A	1	37	0 VA			0 VA			38	1	20 A	--	SPARE
SPARE	--	20 A	1	39		0 VA			0 VA		40	1	20 A	--	SPARE
SPARE	--	20 A	1	41			0 VA			0 VA	42	1	20 A	--	SPARE

Connected Totals:	A	7.6 kVA
	B	5.9 kVA
	C	6.1 kVA
Total:		19.5 kVA
Amps		54 A

(All Phases to be balanced to within 7% Actual Load Totals)

Breaker Option

AS - Powerlink AS Breaker
LO - Handle Lock-off Device
ST - Shunt Trip Type
AUX - Auxillary Contacts
PA - Handle Padlock Attchment
GFCI - Ground Fault Circuit Interrupter
HACR - Heating, A/C & Refrigeration
SF - Subfeed
TC - Time Clock Control

Name

Panelboard:	LP1	Voltage:	208Y/120	Phase:	3	Wire	4	A.I.C. Rating:	42000
Manufacturer:	SIEMENS	Mains:	100A MCB	Mains Rating:	125 A				
Panel Type:	P1	Mounting:	SURFACE	Options:		Notes:			
NEMA Type Enclosure	1								

Load Description	Breaker Option	Trip	Poles	Circ No.	A	B	C	A	B	C	Circ No.	Poles	Trip	Breaker Option	Load Description
FIRST FLOOR LIGHTING		20 A	1	1	146 VA			721 VA			2	1	20 A		FIRST FLOOR LIGHTING
NORTH EXTERIOR...	--	20 A	1	3		0 VA			123 VA		4	1	20 A		SECOND FLOOR LIGHTING
LIGHTING CONTROL PANEL		20 A	1	5			500 VA			1224 VA	6	1	20 A		KITCHEN/STORAGE/PANTRY LIGHT
SECOND FLOOR LIGHTING		20 A	1	7	763 VA			1789 VA			8	1	20 A		MULTI-PURPOSE RM 203 LIGHTING
SECOND FLOOR LIGHTING		20 A	1	9		805 VA			853 VA		10	1	20 A		CORRIDOR 100 LIGHTS
SECOND FLOOR LIGHTING		20 A	1	11			1108 VA			354 VA	12	1	20 A		STAIR B LIGHTING
CORRIDOR 200 LIGHTING		20 A	1	13	688 VA			500 VA			14	1	20 A		"ELCP"
WEST EXTERIOR POLE LIGHTS	--	20 A	1	15		0 VA			0 VA		16	1	20 A	--	NORTH EXT. POLE/BOLLARD...
EAST EXT. POLE/BOLLARD LIGHTS	--	20 A	1	17			0 VA			58 VA	18	1	20 A		EAST SIDEWALK LIGHTING
SPARE	--	20 A	1	19	0 VA			0 VA			20	1	20 A	--	SPARE
SPARE	--	20 A	1	21		0 VA			0 VA		22	1	20 A	--	SPARE
SPARE	--	20 A	1	23			0 VA			0 VA	24	1	20 A	--	SPARE
SPARE	--	20 A	1	25	0 VA			0 VA			26	1	20 A	--	SPARE
SPARE	--	20 A	1	27		0 VA			0 VA		28	1	20 A	--	SPARE
				29						0 VA	30	1	20 A	--	SPARE
SPARE	--	20 A	1	31	0 VA			0 VA			32	1	20 A	--	SPARE
SPARE	--	20 A	1	33		0 VA			0 VA		34	1	20 A	--	SPARE
SPARE	--	20 A	1	35			0 VA			0 VA	36	1	20 A	--	SPARE
SPARE	--	20 A	1	37	0 VA			0 VA			38	1	20 A	--	SPARE
SPARE	--	20 A	1	39		0 VA			0 VA		40	1	20 A	--	SPARE
SPARE	--	20 A	1	41			0 VA			0 VA	42	1	20 A	--	SPARE

Connected Totals:	A	4.5 kVA
	B	1.8 kVA
	C	3.2 kVA
Total:		9.0 kVA
Amps		25 A

(All Phases to be balanced to within 7% Actual Load Totals)

Breaker Option

AS - Powerlink AS Breaker
LO - Handle Lock-off Device
ST - Shunt Trip Type
AUX - Auxillary Contacts
PA - Handle Padlock Attchment
GFCI - Ground Fault Circuit Interrupter
HACR - Heating, A/C & Refrigeration
SF - Subfeed
TC - Time Clock Control

Name

Panelboard:	P1H	Voltage:	208Y/120	Phase:	3	Wire	4	A.I.C. Rating:	42000
Manufacturer:	SIEMENS	Mains:	150A MCB	Mains Rating:	225 A				
Panel Type:	P1	Mounting:	SURFACE	Options:		Notes:			
NEMA Type Enclosure	1								

Load Description	Breaker Option	Trip	Poles	Circ No.	A	B	C	A	B	C	Circ No.	Poles	Trip	Breaker Option	Load Description
				1	308 VA			1500 VA			2	2	20 A		ERH-1, ERH-2
EU-100B, EU-102, EU-106		20 A	2	3		308 VA			1500 VA		4				
				5			786 VA			697 VA	6				
FCU-104		20 A	2	7	786 VA			697 VA			8	3	15 A	HACR	EUH-4
				9		667 VA			697 VA		10				
EUH-1	HACR	15 A	3	11			667 VA			1667 VA	12				
				13	667 VA			1667 VA			14	3	20 A	HACR	EUH-3
				15		1021 VA			1667 VA		16				
EUH-2	HACR	30 A	3	17			1021 VA			697 VA	18				
				19	1021 VA			697 VA			20	3	15 A	HACR	EUH-5
GXF-8		20 A	1	21		100 VA			697 VA		22				
				23			2500 VA			728 VA	24	2	25 A	HACR	GXF-15
EBB-B-1, EBB-B-2	HACR	30 A	2	25	2500 VA			728 VA			26				
				27		2200 VA			1050 VA		28	2	20 A	HACR	EBB-107-1, EBB-107-2, EBB-107-3
EBB-100, EBB-105	HACR	30 A	2	29			2200 VA			1050 VA	30				
Other OUTDOOR STORAGE 114		20 A	1	31	0 VA			1750 VA			32	2	20 A	HACR	EBB-122
				33		1750 VA			1750 VA		34				
HVAC STAIR 'A'-1		20 A	2	35			1750 VA			1500 VA	36	2	20 A	HACR	ERH-3, ERH-4
Other OUTDOOR STORAGE 114		20 A	1	37	500 VA			1500 VA			38				
				39		390 VA			1500 VA		40	2	20 A	HACR	WH-4
HVAC OUTDOOR STORAGE 114		20 A	2	41			390 VA			0 VA	42				

Connected Totals:	A	11.7 kVA
	B	13.9 kVA
	C	14.2 kVA
Total:		39.7 kVA
Amps		110 A

(All Phases to be balanced to within 7% Actual Load Totals)

Breaker Option

AS - Powerlink AS Breaker
LO - Handle Lock-off Device
ST - Shunt Trip Type
AUX - Auxillary Contacts
PA - Handle Padlock Attchment
GFCI - Ground Fault Circuit Interrupter
HACR - Heating, A/C & Refrigeration
SF - Subfeed
TC - Time Clock Control

H2M architects + engineers

538 Broad Hollow Road, 4th Floor East
Melville, NY 11747
631.756.8000 • www.h2m.com
NY Architecture & Landscape Architecture: No Certificate Required
NY Engineering Certificate of Authorization No.: 0018178

CONSULTANTS:

MARK	DATE	DESCRIPTION

STATE OF NEW YORK · CHARLES J. STARKE · 093857 · LICENSED PROFESSIONAL ENGINEER

7/31/2025
Exp. Date

CHARLIE J. STARKE, P.E.
NY PROFESSIONAL ENGINEER Lic. No. 093857

"IN ACCORDANCE WITH ARTICLE 145, SECTION 7209 OF THE NYS EDUCATION LAW, ALTERATION OF THIS DOCUMENT EXCEPT BY A LICENSED PROFESSIONAL IS ILLEGAL"

DESIGNED BY:	DRAWN BY:	CHECKED BY:	REVIEWED BY:
VLV/ISH	ISH	VLV	CJS

PROJECT No:	DATE:	SCALE:
TRFD 2302	FEBRUARY 2025	AS SHOWN

CLIENT

THIELLS ROSEVILLE FIRE DISTRICT

NEW 26-100 FIRE HEADQUARTERS

65 W RAMAPO ROAD
GARNERVILLE, NY 10923

CONTRACT

CONTRACT E
ELECTRICAL CONSTRUCTION

STATUS

FINAL BID DOCUMENT

SHEET TITLE

ELECTRICAL PANEL SCHEDULES

DRAWING No.

E 620.00

C:\Users\hussain\Documents\TRFD2302_Central23-M_jhussainEBT85.rvt

2/25/2025 2:00:09 PM

Name

Panelboard:	PP1	Voltage:	208Y/120	Phase:	3	Wire	4	A.I.C. Rating:	42000
Manufacturer:	SIEMENS	Mains:	150	Mains Rating:	225 A				
Panel Type:	P1	Mounting:	SURFACE	Options:		Notes:			
NEMA Type Enclosure	1								

Load Description	Breaker Option	Trip	Poles	Circ No.	A	B	C	A	B	C	Circ No.	Poles	Trip	Breaker Option	Load Description
APP. BAY GARAGE DOOR		20 A	1	1	1176 VA			1176 VA			2	1	20 A		APP. BAY GARAGE DOOR
APP. BAY GARAGE DOOR		20 A	1	3		1176 VA			1176 VA		4	1	20 A		APP. BAY GARAGE DOOR
APP. BAY GARAGE DOOR		20 A	1	5			1176 VA			1176 VA	6	1	20 A		APP. BAY GARAGE DOOR
APP. BAY GARAGE DOOR		20 A	1	7	1176 VA			1000 VA			8	1	20 A		FACP
CHARGE REEL REC		20 A	1	9		1176 VA			1176 VA		10	1	20 A		CHARGE REEL RECEPTACLE
CHARGE REEL REC		20 A	1	11			1176 VA			1176 VA	12	1	20 A		CHARGE REEL RECEPTACLE
CHARGE REEL REC		20 A	1	13	1176 VA			1176 VA			14	1	20 A		CHARGE REEL RECEPTACLE
APPARATUS BAY RECEPTACLES		20 A	1	15		1080 VA			720 VA		16	1	20 A		OUTDOOR RECEPTACLES
APPARATUS BAY RECEPTACLES		20 A	1	17			1080 VA			540 VA	18	1	20 A		OUTDOOR RECEPTACLES
GEAR AREA 112 RECEPACLES		20 A	1	19	1080 VA			360 VA			20	1	20 A		Power Room 102H, 115
CONFERENCE ROOM 104 REC		20 A	1	21		1080 VA			900 VA		22	1	20 A		Power STORAGE M01
CHIEFS OFFICE 102 REC		20 A	1	23			720 VA			1176 VA	24	1	20 A		CHARGE REEL RECEPTACLE
Room M04, M03, M02 REC		20 A	1	25	900 VA			360 VA			26	1	20 A		GEAR POWER BAR REC
GEAR AREA 112 RECEPTACLES		20 A	1	27		360 VA			1176 VA		28	1	20 A		CHARGE REEL RECEPTACLE
GEAR AREA 112 RECEPTACLES		20 A	1	29			180 VA			0 VA	30	1	20 A	--	FUTURE PAVILION CKT
UPPER PARKING LOT REC	GFCI	20 A	1	31	720 VA			0 VA			32	1	20 A	--	FUTURE PAVILION CKT
IT RM TWISTLOCK REC		30 A	1	33		180 VA			666 VA		34	2	15 A	HACR	OUTDOOR STORAGE ICE MACHINE
IT RM TWIST LOCK REC		30 A	1	35			180 VA			666 VA	36				
UNDERCARRIAGE SPRAY PUMP		20 A	3	37	1201 VA			300 VA			38	1	20 A		GXF-9
				39		1201 VA			1000 VA		40	2	20 A		ECUH-2
				41			1201 VA			1000 VA	42				
WATER-OIL SEPARATOR PANEL		20 A	1	43	10 VA			1000 VA			44	2	20 A		DECON BATHROOM 113
GXF-10		20 A	1	45		900 VA			1000 VA		46				
UHCP		20 A	1	47			500 VA			840 VA	48	1	20 A		SIREN CONTROL CABINET
SPARE	--	20 A	1	49	0 VA			0 VA			50	1	20 A	--	SPARE
SPARE	--	20 A	1	51		0 VA			0 VA		52	1	20 A	--	SPARE
SPARE	--	20 A	1	53			0 VA			0 VA	54	1	20 A	--	SPARE

Connected Totals:	A	12.8 kVA
	B	15.0 kVA
	C	12.8 kVA
Total:		39.2 kVA
Amps:		109 A

(All Phases to be balanced to within 7% Actual Load Totals)

Breaker Option

AS - Powerlink AS Breaker
LO - Handle Lock-off Device
ST - Shunt Trip Type
AUX - Auxillary Contacts
PA - Handle Padlock Attchment
GFCI - Ground Fault Circuit Interrupter
HACR - Heating, A/C & Refrigeration
SF - Subfeed
TC - Time Clock Control

Name

Panelboard:	PP1B	Voltage:	208Y/120	Phase:	3	Wire	4	A.I.C. Rating:	42,000
Manufacturer:	SIEMENS	Mains:	150A MCB	Mains Rating:	225 A				
Panel Type:	P1	Mounting:	SURFACE	Options:		Notes:			
NEMA Type Enclosure	1								

Load Description	Breaker Option	Trip	Poles	Circ No.	A	B	C	A	B	C	Circ No.	Poles	Trip	Breaker Option	Load Description
DAY ROOM 107 RECEPTACLES		20 A	1	1	1070 VA			890 VA			2	1	20 A		FITNESS ROOM 105 RECEPTACLES
Room 103, 101, 'A'-1, 122 REC		20 A	1	3		1196 VA			720 VA		4	1	20 A		FITNESS ROOM RECEPTACLES
CORRIDOR 100 REC		20 A	1	5			1080 VA			720 VA	6	1	20 A		CHIEFS OFFICE 102 RECEPTACLES
Room 118, 119 REC		20 A	1	7	720 VA			900 VA			8	1	20 A		RADIO RM 119/ DECON 118 RECEP
WORK ROOM 117 REC		20 A	1	9		540 VA			900 VA		10	1	20 A		LINE OFFICERS 106 RECEPTACLES
LINE OFFICERS 106 REC		20 A	1	11			1080 VA			540 VA	12	1	20 A		CORRIDOR 100 REC
Room 108, 109 REC		20 A	1	13	900 VA			540 VA			14	1	20 A		WOMEN'S TOILET 101 REC
MEN'S TOILET 103 REC		20 A	1	15		540 VA			1000 VA		16	1	20 A	GFCI	WOMEN'S TOILET 101 HAND...
MEN'S TOILET 103 HAND DRYER	GFCI	20 A	1	17			1000 VA			1000 VA	18	1	20 A	GFCI	SHOWER ROOM 105A HAND...
FITNESS ROOM 105 RECEPTACLES		20 A	1	19	540 VA			540 VA			20	1	20 A		SHOWER ROOM 105A REC
ELEVATOR PIT SUMP PUMP	GFCI	20 A	1	21		1210 VA			710 VA		22	1	20 A		DAY ROOM 107 MILLWORK REC
ELEVATOR SUMP PUMP CONTRO...		20 A	1	23			180 VA			336 VA	24	1	20 A		DAY ROOM COOLER REC
AUX. 109/ LINE OFF. 106 TV RECEP		20 A	1	25	700 VA			1452 VA			26	1	20 A		DAY ROOM MICROWAVE REC
Other UTILITY ROOM 110		20 A	1	27		500 VA			1070 VA		28	1	20 A		DAY ROOM 107 REC
PANEL FP		60 A	3	29			3680 VA			2500 VA	30	1	30 A	--	GENERATOR BLOCK HEATER
				31	1000 VA			200 VA			32	1	20 A	--	GENERATOR ANTI-COND. HEATER
				33		300 VA			1050 VA		34	1	20 A		CONF ROOM/CHEIF TV RECEP
Power DECON BATHROOM 113		20 A	1	35			720 VA			360 VA	36	1	20 A		GEAR AREA DISPLAY/DASH RECEP
DECON BATHROOM HAND DRYER	GFCI	20 A	1	37	1000 VA			1900 VA			38	1	20 A		GEAR DRYER
RPZ ENCLOSURE HEATING PANEL	--	30 A	1	39		2100 VA			1000 VA		40	1	20 A	--	GENERARTOR BATTERY...
GXF14		20 A	1	41			500 VA			0 VA	42	1	20 A	--	SPARE

Connected Totals:	A	12.4 kVA
	B	12.8 kVA
	C	13.7 kVA
Total:		38.9 kVA
Amps		108 A

(All Phases to be balanced to within 7% Actual Load Totals)

Breaker Option

AS - Powerlink AS Breaker
LO - Handle Lock-off Device
ST - Shunt Trip Type
AUX - Auxillary Contacts
PA - Handle Padlock Attchment
GFCI - Ground Fault Circuit Interrupter
HACR - Heating, A/C & Refrigeration
SF - Subfeed
TC - Time Clock Control

Name

Panelboard:	PP2	Voltage:	208Y/120	Phase:	3	Wire	4	A.I.C. Rating:	42,000
Manufacturer:	SIEMENS	Mains:	150A MCB	Mains Rating:	225 A				
Panel Type:	P1	Mounting:	SURFACE	Options:		Notes:			
NEMA Type Enclosure	1								

Load Description	Breaker Option	Trip	Poles	Circ No.	A	B	C	A	B	C	Circ No.	Poles	Trip	Breaker Option	Load Description
COMMISSIONERS 202 RECEP		20 A	1	1	720 VA			890 VA			2	1	20 A		PURCHASING 205 RECEPTACLES
PRESIDENTS 206 RECEPTACLES		20 A	1	3		890 VA			900 VA		4	1	20 A		ROOM 207, 102F, 209 RECEP
CORRIDOR 200 RECEPTACLES		20 A	1	5			720 VA			360 VA	6	1	20 A		MULTI-PURPOSE ROOM 203 RECEP
MULTI-PURPOSE ROOM 203		20 A	1	7	1080 VA			350 VA			8	1	20 A		MULTI-PURPOSE TV RECEP 203
CORRIDOR 200/STAIR B RECEP		20 A	1	9		720 VA			1080 VA		10	1	20 A		MULTI-PURPOSE RM 203A RECEP
COMMISSIONERS 202 RECEP		20 A	1	11			890 VA			1080 VA	12	1	20 A		APPARATUS BAY 120 RECEP
PURCHASING 205 RECEPTACLES		20 A	1	13	720 VA			720 VA			14	1	20 A		PRESIDENTS 206 RECEPTACLES
MULTI-PURPOSE RM 203 TV RECEP		20 A	1	15		1400 VA			720 VA		16	1	20 A		M. TOILET 209 REC
EXTERIOR SOFFIT LIGHTS		20 A	1	17			624 VA			1000 VA	18	1	20 A	GFCI	Other M. TOILET 209
SPARE	--	20 A	1	19	0 VA			1000 VA			20	1	20 A	GFCI	Other W. TOILET 207
ICE MACHINE RECEPTACLE		20 A	1	21		840 VA			400 VA		22	1	20 A		BARBACK CPPLER RECEPTACLE
APPARATUS BAY LIGHTING		20 A	1	23			1000 VA			914 VA	24	1	20 A		APPARATUS BAY LIGHTING
BUILDING SIGNAGE/SOFFIT...		20 A	1	25	1627 VA			500 VA			26	1	20 A		ELEVATOR CAB LIGHTING
SPARE	--	20 A	1	27		0 VA			0 VA		28	1	20 A	--	SPARE
SPARE	--	20 A	1	29			0 VA			0 VA	30	1	20 A	--	SPARE
SPARE	--	20 A	1	31	0 VA			0 VA			32	1	20 A	--	SPARE
SPARE	--	20 A	1	33		0 VA			0 VA		34	1	20 A	--	SPARE
SPARE	--	20 A	1	35			0 VA			0 VA	36	1	20 A	--	SPARE
SPARE	--	20 A	1	37	0 VA			0 VA			38	1	20 A	--	SPARE
SPARE	--	20 A	1	39		0 VA			0 VA		40	1	20 A	--	SPARE
SPARE	--	20 A	1	41			0 VA			0 VA	42	1	20 A	--	SPARE

Connected Totals:	A	7.5 kVA
	B	7.0 kVA
	C	6.5 kVA
Total:		20.9 kVA
Amps		58 A

(All Phases to be balanced to within 7% Actual Load Totals)

Breaker Option

AS - Powerlink AS Breaker
LO - Handle Lock-off Device
ST - Shunt Trip Type
AUX - Auxillary Contacts
PA - Handle Padlock Attchment
GFCI - Ground Fault Circuit Interrupter
HACR - Heating, A/C & Refrigeration
SF - Subfeed
TC - Time Clock Control

Name

Panelboard:	P2H	Voltage:	208Y/120	Phase:	3	Wire	4	A.I.C. Rating:	22,000
Manufacturer:	SIEMENS	Mains:	150A MCB	Mains Rating:	225 A				
Panel Type:	P1	Mounting:	SURFACE	Options:		Notes:			
NEMA Type Enclosure	1								

Load Description	Breaker Option	Trip	Poles	Circ No.	A	B	C	A	B	C	Circ No.	Poles	Trip	Breaker Option	Load Description
GUH-6, GUH-7, GUH-8	HACR	20 A	1	1	1212 VA			1818 VA			2	1	20 A	HACR	GUH-1, GUH-2, GUH-3
GUH-4, GUH-5	HACR	20 A	1	3		1212 VA			2250 VA		4	2	30 A	HACR	EBB-3, EBB-4
EBB-203A-1, EBB-203A-2	HACR	20 A	2	5			900 VA			2250 VA	6				
				7	900 VA			900 VA			8	2	20 A	HACR	EBB-203-1, EBB-203-2
EBB-A-3	HACR	25 A	2	9		1750 VA			900 VA		10				
				11			1750 VA			2150 VA	12	2	25 A	HACR	EBB-A-4
EBB-202-1, EBB-202-2	HACR	20 A	2	13	900 VA			1750 VA			14				
				15		900 VA			450 VA		16	1	20 A	HACR	GXF-3
HVLS-2	HACR	15 A	1	17			180 VA			342 VA	18	1	20 A	HACR	GXF-4
HVLS-1	HACR	15 A	1	19	0 VA			400 VA			20	1	20 A	HACR	GXF-1
HVLS-3	HACR	15 A	1	21		940 VA			342 VA		22	1	20 A	HACR	GXF-5
GXF-4 AND GXF-5 TIME CLOCK	HACR	20 A	1	23			100 VA			300 VA	24	1	20 A	HACR	GXF-2 STARTER, MD-1, MD-2, MD-3
GUH-8, GUH-9	HACR	20 A	1	25	1212 VA			400 VA			26	1	20 A	HACR	GXF-11
KX-1	HACR	15 A	3	27		793 VA			300 VA		28	1	20 A	HACR	HVAC HIGH ROOF
				29			793 VA			1500 VA	30	2	15 A	HACR	WH-1
				31	793 VA			0 VA			32				
WH-2	HACR	15 A	2	33		1500 VA			0 VA		34	1	20 A	--	SPARE
				35			0 VA			0 VA	36	1	20 A	--	SPARE
SPARE	--	20 A	1	37	0 VA			0 VA			38	1	20 A	--	SPARE
SPARE	--	20 A	1	39		0 VA			0 VA		40	1	20 A	--	SPARE
SPARE	--	20 A	1	41			0 VA			0 VA	42	1	20 A	--	SPARE

Connected Totals:	A	10.3 kVA
	B	11.3 kVA
	C	10.3 kVA
Total:		31.9 kVA
Amps		89 A

(All Phases to be balanced to within 7% Actual Load Totals)

Breaker Option

AS - Powerlink AS Breaker
LO - Handle Lock-off Device
ST - Shunt Trip Type
AUX - Auxillary Contacts
PA - Handle Padlock Attchment
GFCI - Ground Fault Circuit Interrupter
HACR - Heating, A/C & Refrigeration
SF - Subfeed
TC - Time Clock Control

H2M architects + engineers

538 Broad Hollow Road, 4th Floor East
Melville, NY 11747
631.756.8000 • www.h2m.com
NY Architecture & Landscape Architecture: No Certificate Required
NY Engineering Certificate of Authorization No.: 0018178

CONSULTANTS:

MARK	DATE	DESCRIPTION

STATE OF NEW YORK · CHARLES J. STARKE · 093837 · LICENSED PROFESSIONAL ENGINEER

7/31/2025
Exp. Date

CHARLIE J. STARKE, P.E.
NY PROFESSIONAL ENGINEER Lic. No. 093837

"IN ACCORDANCE WITH ARTICLE 145, SECTION 7209 OF THE NYS EDUCATION LAW, ALTERATION OF THIS DOCUMENT EXCEPT BY A LICENSED PROFESSIONAL IS ILLEGAL"

DESIGNED BY:	DRAWN BY:	CHECKED BY:	REVIEWED BY:
VLV/ISH	ISH	VLV	CJS
PROJECT No: TRFD 2302	DATE: FEBRUARY 2025	SCALE: AS SHOWN	

CLIENT

THIELLS ROSEVILLE FIRE DISTRICT

NEW 26-100 FIRE HEADQUARTERS

THIELLS 26 FD

65 W RAMAPO ROAD GARNERVILLE, NY 10923

CONTRACT

CONTRACT E ELECTRICAL CONSTRUCTION

STATUS

FINAL BID DOCUMENT

SHEET TITLE

ELECTRICAL PANEL SCHEDULES

DRAWING No.

E 621.00

C:\Users\hussain\Documents\TRFD2302_Central23-M_jhussainEBT85.rvt
2/25/2025 2:00:09 PM

FIRE ALARM LEGEND

SYMBOL	DESCRIPTION	COMMENTS
FACP	FIRE ALARM CONTROL PANEL.	
RA	REMOTE ANNUNCIATOR WITH BACKBOX.	
S	SMOKE DETECTOR.	
S CO	SMOKE DETECTOR WITH CARBON MONOXIDE AND LOCAL TEMPORAL '4' SOUNDER BASE.	
S CO/SB	SMOKE DETECTOR WITH CARBON MONOXIDE AND INTEGRAL SOUNDER BASE.	
CO	CARBON MONOXIDE DETECTOR.	
RAL S	ABOVE CEILING SMOKE DETECTOR WITH REMOTE ALARM LAMP.	
RAL S / R1	DUCT DETECTOR WITH REMOTE ALARM LAMP; "S" DENOTES SUPPLY, "R" DENOTES RETURN.	
H	HEAT DETECTOR.	
HT	HEAT DETECTOR 200°.	
H	HORN/STROBE COMBO.	
H WP	WEATHER PROOF HORN/STORBE COMBO WITH BACKBOX.	
AM	ADAPTER MODULE WITH MOUNTING PLATE.	
SH	SMOKE HATCH (F.B.O.).	
	STROBE.	
DH	MAGNETIC DOOR HOLDER.	
DR	DOOR RELEASE RELAY.	
F	MANUAL PULL STATION WITH BACKBOX.	
R	RELAY.	
IAM	INDIVIDUAL ADDRESSABLE MODULE.	
CM	CONTROL MODULE.	
AES	AUTOMATIC EXTINGUISHING SYSTEM.	
	MOTOR STARTER.	
	END OF LINE RESISTOR.	
BT	BEAM DETECTOR TRANSMITTER.	
BR	BEAM DETECTOR RECEIVER.	
SP	SURGE PROTECTOR.	
	BELL/STROBE.	
S E	SMOKE DETECTOR FOR ELEVATOR RECALL.	
SRP	SUPPRESSION RELEASING PANEL.	
MS	MAINTENANCE SWITCH.	
SOL	SOLENOID (F.B.O.).	
PS	PRESSURE SWITCH.	
TS	TAMPER SWITCH.	
FS	FLOW SWITCH.	
CS	COIL SUPERVISORY (F.B.O.).	
CL	AIR COMPRESSOR, LOW PRESSURE (F.B.O.).	
CH	AIR COMPRESSOR, HIGH PRESSURE (F.B.O.).	
B	STAGE 2 BELL.	

TYPICAL DEVICE LOCATION

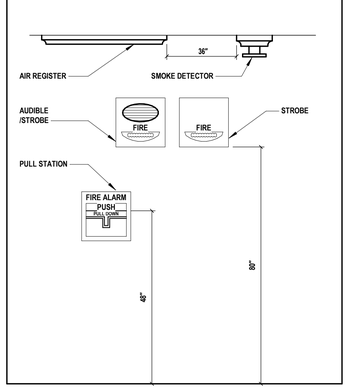

1. ALL WIRING TO BE INSTALLED ACCORDING TO THE LATEST REVISION OF THE NATIONAL ELECTRIC CODE OR AS DICTATED BY CONTRACT SPECIFICATIONS, AND THE 2016 EDITION OF N.F.P.A 72 OR AS REQUIRED BY LOCAL ORDINANCE.
2. ALL CONDUCTORS MUST BE TEST FREE OF OPENS, SHORTS AND GROUNDS.
3. GROUNDING MUST COMPLY WITH THE NATIONAL ELECTRIC CODE. GROUNDING MUST BE NO. 12 A.W.G.
4. ALL PANEL TERMINATIONS TO BE SUPERVISED BY A FACTORY AUTHORIZED TECHNICIAN PRIOR TO POWERING EQUIPMENT.
5. FOR COMPONENT WIRING AND INSTALLATION INFORMATION REFER TO MANUFACTURERS REQUIREMENTS.
6. REFER TO CONTRACT DRAWINGS FOR APPROXIMATE DEVICE LOCATIONS. DRAWINGS REPRESENT DEVICE QUANTITIES. SHOP DRAWINGS SHALL BE SUBMITTED SHOWING SCALED LOCATIONS. CONTRACTOR TO SUBMIT PLANS STAMPED BY LICENSED NEW YORK PROFESSIONAL ENGINEER ONLY FOR REVIEW PRIOR TO SUBMISSION TO AHJ. SHOP DRAWINGS WITHOUT P.E STAMP WILL BE AUTOMATICALLY REJECTED.
7. INSTALL DETECTORS A MINIMUM OF 3'-0" FROM ANY SUPPLY OR RETURN AIR REGISTERS. COORDINATE EXACT LOCATIONS OF SUPPLY/RETURNS REGISTERS WITH MECHANICAL CONTRACTOR
8. WHEN INSTALLING SHIELDED CABLE THE FOLLOWING MUST BE OBSERVED:
   A. METALLIC CONTINUITY MUST BE MAINTAINED THROUGHOUT THE CABLE RUN.
   B. THE CABLE SHIELD MUST BE ISOLATED FROM GROUND AND TERMINATED ONLY IN THE ASSOCIATED CONTROL PANEL AT THE TERMINAL INDICATED ON THE CONTROL PANEL DRAWINGS. THE REMOTE END OF THE SHIELD (AT LAST DEVICE) MUST BE TAPED AND ISOLATED FROM GROUND.
9. ALL STROBE APPLIANCES SHALL BE SYNCHRONIZED. ALL ALARM INDICATING APPLIANCES SHALL SOUND A "TEMPORAL 3' CODE PATTERN, UNLESS SYSTEM IS VOICE ACTIVATED.
10. AFTER ALARM INDICATION, ALL FANS SHALL BE MANUALLY RESET INDEPENDENT FROM F.A.C.P. SYSTEM RESET. PROVIDE ALL REQUIRED HARDWARE ACCESSORIES, MOTOR STARTERS, CONTROLS, POWER AND CONTROL WIRING AND CONDUITS TO PROVIDE INDEPENDENT RESET OF ALL FANS AFTER ALARM INDICATION.
11. INSTALL ALL DEVICES IN ACCORDANCE WITH A.D.A REQUIREMENTS. ALL DEVICES SHALL BE MOUNTED AS FOLLOWS:
    A. MANUAL PULL STATIONS 48" O.C.
    B. ALARM INDICATING APPLIANCE 80" A.F.F.
    C. VERIFY WITH CONTRACT SPECIFICATIONS FOR ANY DEVIATIONS.
12. STROBES SHALL BE WIRED TO REMAIN ACTIVE AFTER SILENCE FUNCTION IS PERFORMED.
13. PROVIDE AND INSTALL ALL NECESSARY CONTROL MODULES, SYNCHRONIZATION MODULES AND MONITOR MODULES AS REQUIRED BY MANUFACTURER.
14. COORDINATE INSTALLATION OF WATER FLOW AND TAMPER SWITCHES WITH SPRINKLER CONTRACTOR.
15. CONTRACTOR TO INSTALL NECESSARY & REQUIRED POWER SUPPLY UNITS TO ENSURE PROPER OPERATION AT ALL MAGNETIC DOOR HOLDERS AS SHOWN ON DRAWINGS.
16. PROVIDE AND INSTALL ALL REQUIRED RELAYS TO RELEASE ELECTRIC DOOR LATCHES.
17. COORDINATE EXACT LOCATION OF REMOTE ANNUNCIATOR AND F.A.C.P. WITH LOCAL FIRE MARSHALL AND OWNER.
18. PROVIDE ALL REQUIRED DUCT SMOKE DETECTORS. CONTRACTOR TO INSTALL DUCT SMOKE DETECTORS. CONTRACTOR TO INTERFACE ALL DUCT DETECTORS WITH FACP.
19. CONTRACTOR TO INSTALL NECESSARY COMPONENTS FOR ELEVATOR RECALL AS PER LOCAL FIRE MARSHALL. EACH LOBBY, MACHINE ROOM AND PIT TO HAVE SMOKE DETECTION. WHERE APPLICABLE CONTRACTOR TO COORDINATE AND INSTALL NECESSARY COMPONENTS TO INTERFACE FIRE ALARM SYSTEM, ELEVATOR, AND SPRINKLER HEAD SOLENOID VALVES LOCATED IN THE ELEVATOR SHAFT.
20. CONTRACTOR SHALL PROVIDE TWO TELEPHONE LINES AND TELEPHONE JACKS. PROVIDE ALL REQUIRED WIRING/CONDUIT TO LOCATE NEW TELEPHONE JACKS ADJACENT TO FACP.
21. FIRE ALARM RISER DIAGRAM IS SCHEMATIC. REFER TO FLOOR PLANS FOR DEVICE TYPES AND QUANTITIES.
22. ALL HVAC EQUIPMENT WITH A CFM RATING OF 1000 CFM OR GREATER SHALL BE INTERCONNECTED TO THE FIRE ALARM SYSTEM AND SHUT DOWN UPON FIRE ALARM SYSTEM ALARM ACTIVATION. CONTRACTOR SHALL ALSO PROVIDE AND INSTALL NEW SUPPLY AND RETURN DUCT SMOKE DETECTORS WITH REMOTE LED'S FOR ALL HVAC UNITS WITH A CFM RATING OF 2000 CFM OR GREATER. C
23. IN ADDITION TO DEVICES SHOWN ON THE DRAWINGS CONTRACTOR TO PROVIDE FIVE SMOKE DETECTORS, FIVE HEAT DETECTORS, FIVE PULL STATIONS, FIVE HORN STROBES, FIVE STROBES AND TEN DOOR HOLDERS. EACH DEVICE SHALL BE INCLUDED WITH 100' OF WIRING AND/OR CONDUIT.
24. CONTRACTOR TO TIE KITCHEN HOOD HALON EXTINGUISHING SYSTEM TO NEW F.A.C.P. FOR MONITORING PURPOSES. PROVIDE ALL NECESSARY RELAYS AND COMPONENTS TO ENSURE COMPLETE COVERAGE.
25. PLENUM WIRING TO BE USED IN ALL AREAS ABOVE DROP CEILINGS. CONDUIT MUST BE USED IN ALL MECHANICAL AND ELECTRICAL ROOMS. CONDUIT MUST ALSO BE USED IN ALL AREAS WITH OPEN CEILINGS.
26. ALL EQUIPMENT TO BE RECESSED MOUNTED AND ALL WIRING AND CONDUIT TO BE RUN CONCEALED
27. HEAT DETECTOR MOUNTED IN THE ELEVATOR SHAFT MUST BE WITHIN 2' OF THE SPRINKLER HEAD.
28. ON WATER FLOW, AND IF THE F.A.C.P WAS NOT IN ALARM, THE PRESSURE SWITCH WILL PUT THE SYSTEM IN ALARM TURNING ON AV'S, STAGE 2 BELL AND SEND SIGNALS TO CENTRAL STATION AND SHUT DOWN FANS.
29. TS (TAMPER SWITCH), CH (AIR COMPRESSOR HIGH PRESSURE), CL (AIR COMPRESSOR LOW PRESSURE), SHALL CAUSE A SUPERVISORY TROUBLE AT THE F.A.C.P AND SEND A SIGNAL TO CENTRAL STATION IF SYSTEM IS MONITORED.
30. CONTRACTOR SHALL USE SILICONE WATER PROOF SEALANT TO SEAL TOP, LEFT, AND RIGHT EDGES OF FIRE ALARM DEVICES TO WALL TO PREVENT MOISTURE FROM ACCUMULATING BEHIND DEVICES IN ALL EXTERIOR AND WET LOCATIONS. BOTTOM EDGE SHALL BE LEFT UNSEALED FOR DRAINAGE. COLOR OF SILICONE SHALL MATCH EITHER WALL COLOR OR FIXTURE COLOR.

	CONTROL UNIT ANNUNCIATION				NOTIFICATION				SUPPLIMENTARY	
	ACTUATE COMMON ALARM SIGNAL INDICATOR	ACTUATE VISUAL ALARM SIGNAL	ACTUATE COMMON SUPERVISORY SIGNAL INDICATOR	ACTUATE COMMON TROUBLE SIGNAL	ACTUATE ZONE INDICATION	ACTUATE FULL BUILDING EVACUATION SIGNAL	DISPLAY CHANGE OF STATUS	TRANSMIT FIRE ALARM SIGNAL TO SUPERVISING STATION	TRANSMIT SUPERVISION SIGNAL TO SUPERVISING STATION	TRANSMIT TROUBLE SIGNAL TO SUPERVISING STATION	HVAC FAN SHUTDOWN	INITIAINTE EXTERIOR STROBE
MANUAL PULL STATION	●	●			●	●	●	●			●	●
SMOKE DETECTOR	●	●			●	●	●	●			●	●
HEAT DETECTOR	●	●			●	●	●	●			●	●
DUCT DETECTOR	●	●			●	●	●	●			●	●
CARBON MONOXIDE DETECTOR					●		●		●			
FIRE PANEL AC POWER FAILURE			●						●			
FA SYSTEM LOW BATTERY				●						●		
OPEN CIRCUIT				●						●		
GROUND FAULT				●						●		
NOTIFICATION APPLIANCE CIRCUIT SHORT				●						●		
AIR ASPIRATION DETECTOR	●	●			●	●	●	●			●	●

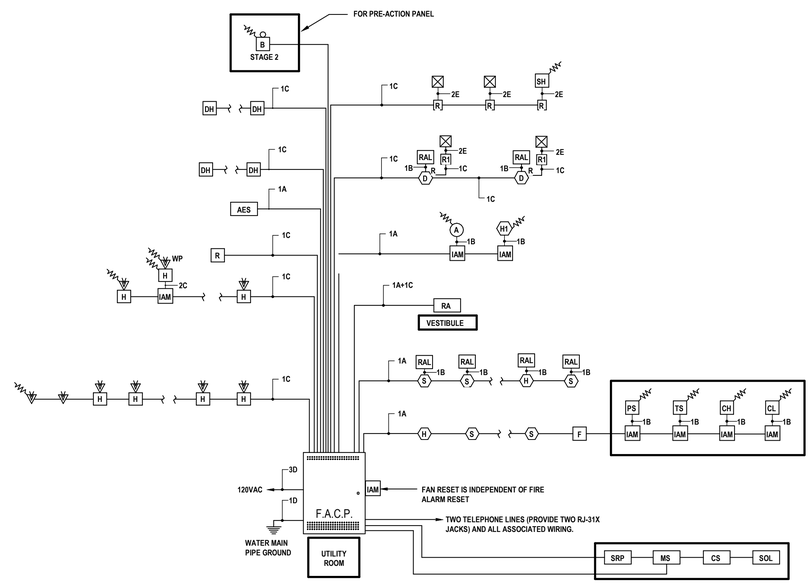

WIRE LEGEND

	WIRE DESCRIPTION	TYPE	NOTES
A	1 PAIR TWISTED SHIELDED #18 AWG	FPLP	-
B	1 PAIR #18 AWG. NON-SHIELDED	FPLP	-
C	1 PAIR #14 AWG. NON SHIELDED	FPLP	-
D	#12 AWG. NON SHIELDED	THHN	*
E	#14 AWG. NON SHIELDED	THHN	-
F	1 PAIR TWISTED SHIELDED #16 AWG.	FPLP	-

H2M architects + engineers

538 Broad Hollow Road, 4th Floor East
Melville, NY 11747
631.756.8000 • www.h2m.com
NY Architecture & Landscape Architecture: No Certificate Required
NY Engineering Certificate of Authorization No.: 0018178

CONSULTANTS:

MARK	DATE	DESCRIPTION

STATE OF NEW YORK · CHARLES J. STARKE · 093837 · LICENSED PROFESSIONAL ENGINEER

7/31/2025
Exp. Date

CHARLIE J. STARKE, P.E.
NY PROFESSIONAL ENGINEER Lic. No. 093837

"IN ACCORDANCE WITH ARTICLE 145, SECTION 7209 OF THE NYS EDUCATION LAW, ALTERATION OF THIS DOCUMENT EXCEPT BY A LICENSED PROFESSIONAL IS ILLEGAL"

DESIGNED BY:	DRAWN BY:	CHECKED BY:	REVIEWED BY:
VLV/INP	INP	VLV	CJS

PROJECT No:	DATE:	SCALE:
TRFD 2302	FEBRUARY 2025	AS SHOWN

CLIENT

THIELLS ROSEVILLE FIRE DISTRICT

NEW 26-100 FIRE HEADQUARTERS

65 W RAMAPO ROAD GARNERVILLE, NY 10923

CONTRACT

CONTRACT E ELECTRICAL CONSTRUCTION

STATUS

FINAL BID DOCUMENT

SHEET TITLE

FIRE ALARM LEGENDS AND RISER DIAGRAMS

DRAWING No.

FA 001.00

C:\Users\hussain\Documents\TRFD2302_Centra\23-M_jhussainEBT85.rvt
2/25/2025 2:00:10 PM

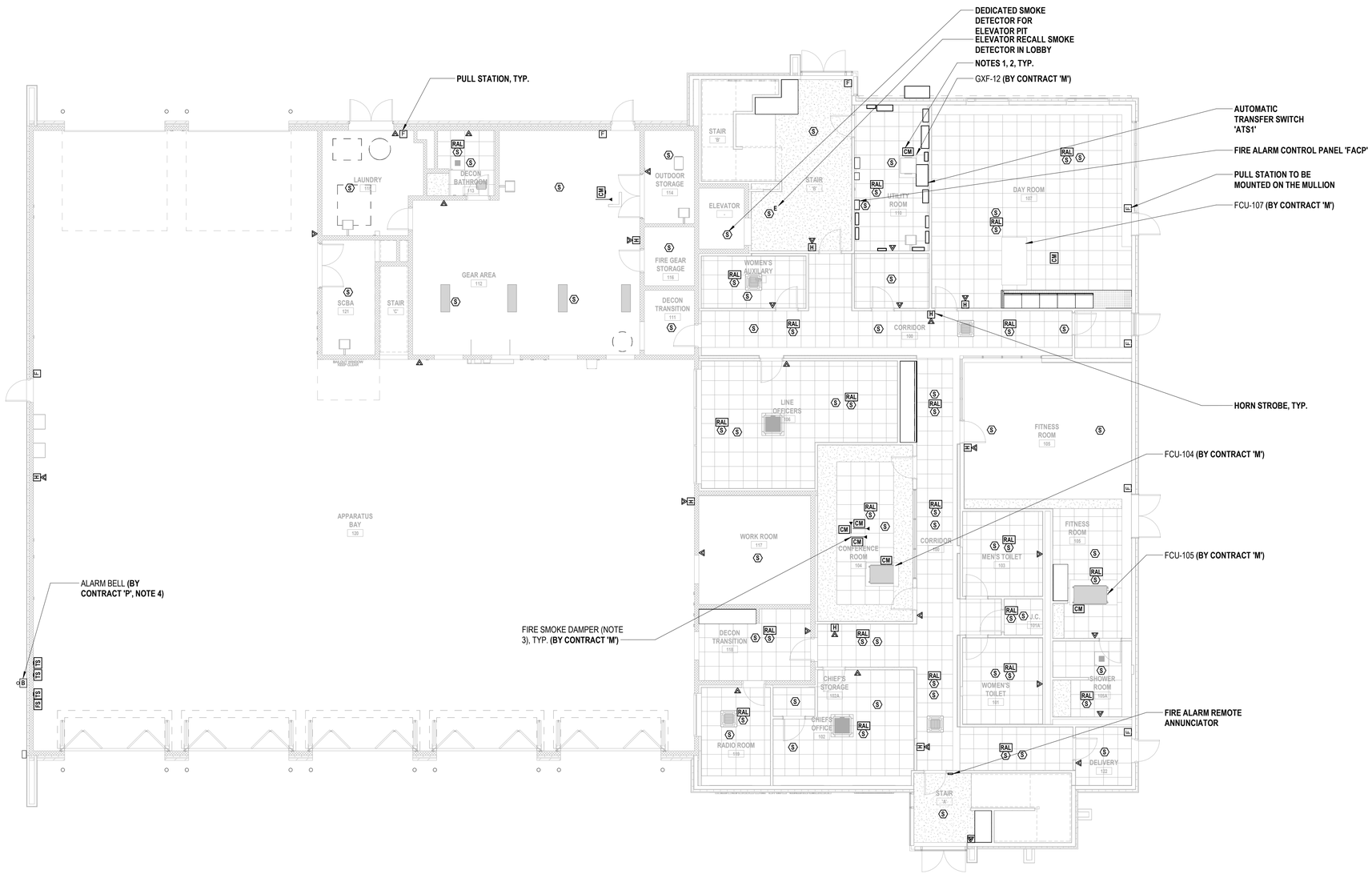

1 First Floor Fire Alarm Plan

SCALE: 1/8" = 1'-0"

GENERAL NOTE:

G1. CONTRACTOR SHALL PROVIDE AND INSTALL NEW FIRE ALARM DEVICES AND ALL NECESSARY EQUIPMENT TO MAKE A PROPER CONNECTION TO NEW FIRE ALARM CONTROL PANEL "FACP" LOCATED ON THE FIRST FLOOR USING MANUFACTURER'S RECOMMENDED WIRING. CONTRACTOR SHALL PROVIDE POWER/DATA FEEDS TO NEW FIRE ALARM DEVICE LOCATIONS. PROVIDE AND INSTALL EXPANSION CARDS, WIRE/CONDUIT, RELAYS, POWER SUPPLIES, BATTERIES, EXTENDERS, PROGRAMMING, MOUNTING HARDWARE, AND JUNCTION BOXES AS REQUIRED. TYPICAL FOR ALL FIRE ALARM DEVICES.

NOTES:

1. CONTRACTOR SHALL PROVIDE AND INSTALL NEW FAN SHUTDOWN CONTROL MODULES, ALL ASSOCIATED RELAYS, WIRING AND CONDUIT, AND INTEGRATE WITH HVAC EQUIPMENT/STARTERS AND NEW FIRE ALARM CONTROL MODULE.
2. ALL HVAC EQUIPMENT SHALL BE INTERCONNECTED WITH THE FIRE ALARM SYSTEM AND SHUT DOWN UPON FIRE ALARM SYSTEM, ACTIVATION. CONTRACTOR SHALL INTERFACE FIRE ALARM WITH ALL NEW UNITS.
3. CONTRACTOR SHALL PROVIDE AND INSTALL A DUCT SMOKE DETECTOR WITHIN 5'-0" OF ALL FIRE/SMOKE DAMPERS. ASSOCIATED FIRE/SMOKE DAMPER SHALL CLOSE UPON DUCT SMOKE DETECTOR ALARM FROM THE DETECTOR WITHIN 5'-0". REMOTE ALARM LAMP SHALL BE INSTALLED ON THE CEILING BELOW DETECTOR.
4. CONTRACTOR SHALL INTERFACE ALARM BELL WITH FIRE ALARM CONTROL PANEL. CONTRACTOR SHALL PROVIDE REQUIRED WIRING AND CONDUIT.

H2M architects + engineers

538 Broad Hollow Road, 4th Floor East
Melville, NY 11747
631.756.8000 • www.h2m.com
NY Architecture & Landscape Architecture: No Certificate Required
NY Engineering Certificate of Authorization No.: 0018178

CONSULTANTS:

MARK	DATE	DESCRIPTION

STATE OF NEW YORK · CHARLES J. STARKE · 093837 · LICENSED PROFESSIONAL ENGINEER

7/31/2025
Exp. Date

CHARLIE J. STARKE, P.E.
NY PROFESSIONAL ENGINEER Lic. No. 093837

"IN ACCORDANCE WITH ARTICLE 145, SECTION 7209 OF THE NYS EDUCATION LAW, ALTERATION OF THIS DOCUMENT EXCEPT BY A LICENSED PROFESSIONAL IS ILLEGAL"

DESIGNED BY:	DRAWN BY:	CHECKED BY:	REVIEWED BY:
VLV/INP	INP	VLV	CJS

PROJECT No:	DATE:	SCALE:
TRFD 2302	FEBRUARY 2025	AS SHOWN

CLIENT

THIELLS ROSEVILLE FIRE DISTRICT

NEW 26-100 FIRE HEADQUARTERS

THIELLS 26 FD

65 W RAMAPO ROAD
GARNERVILLE, NY 10923

CONTRACT

CONTRACT E
ELECTRICAL CONSTRUCTION

STATUS

FINAL BID DOCUMENT

SHEET TITLE

FIRE ALARM FIRST FLOOR PLAN

DRAWING No.

FA 100.00

C:\Users\hussain\Documents\TRFD2302_Central23-M_Hussain\EBTB5.rvt

2/25/2025 2:00:11 PM

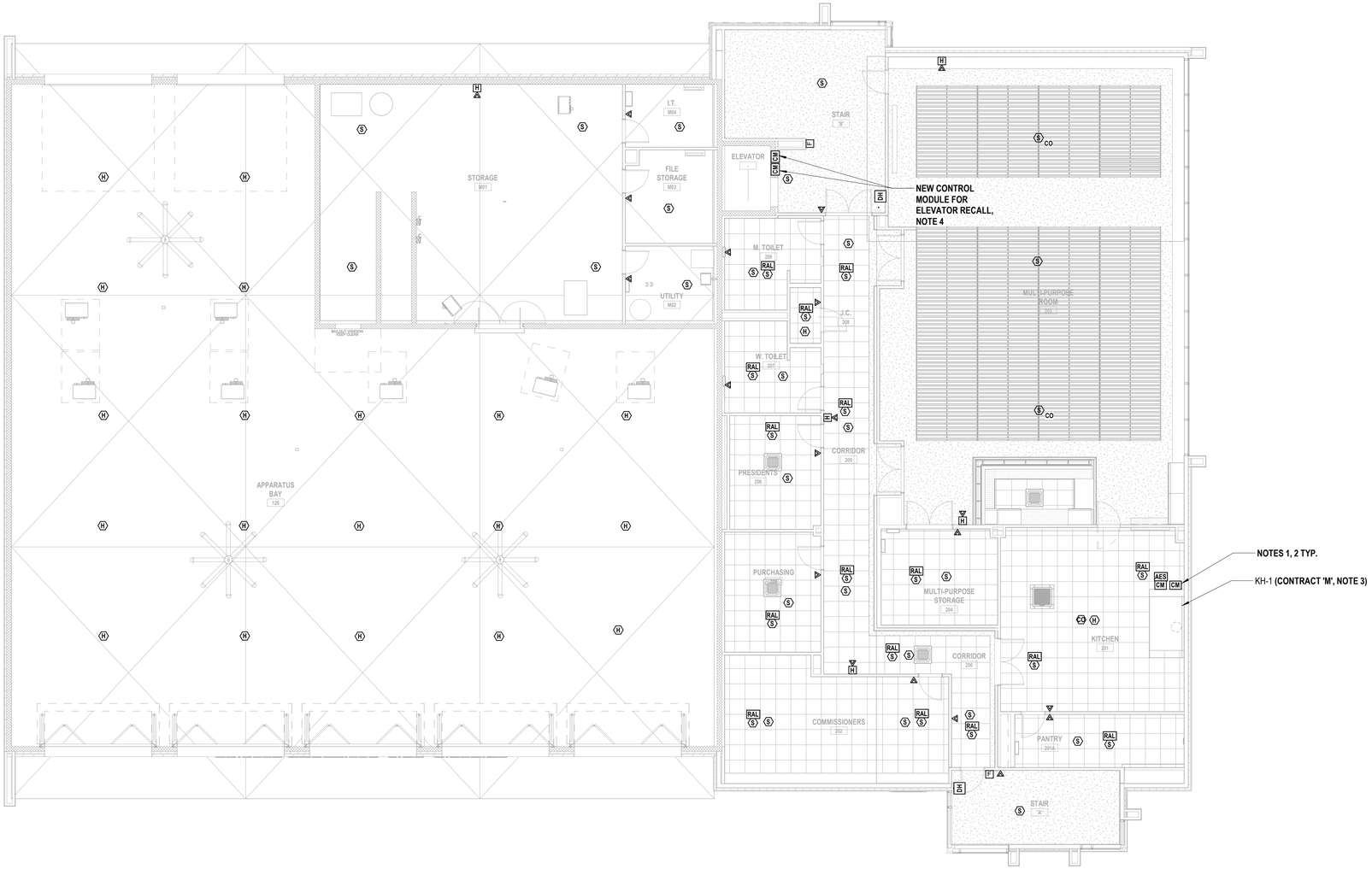

1 Second Floor Fire Alarm Plan

SCALE: 1/8" = 1'-0"

GENERAL NOTE:

G1. CONTRACTOR SHALL PROVIDE AND INSTALL NEW FIRE ALARM DEVICES AND ALL NECESSARY EQUIPMENT TO MAKE A PROPER CONNECTION TO NEW FIRE ALARM CONTROL PANEL "FACP" LOCATED ON THE FIRST FLOOR USING MANUFACTURER'S RECOMMENDED WIRING. CONTRACTOR SHALL PROVIDE POWER/DATA FEEDS TO NEW FIRE ALARM DEVICE LOCATIONS. PROVIDE AND INSTALL EXPANSION CARDS, WIRE/CONDUIT, RELAYS, POWER SUPPLIES, BATTERIES, EXTENDERS, PROGRAMMING, MOUNTING HARDWARE, AND JUNCTION BOXES AS REQUIRED. TYPICAL FOR ALL FIRE ALARM DEVICES.

NOTES:

1. CONTRACTOR SHALL PROVIDE AND INSTALL NEW FAN SHUTDOWN CONTROL MODULES, ALL ASSOCIATED RELAYS, WIRING AND CONDUIT, AND INTEGRATE WITH HVAC EQUIPMENT/STARTERS AND NEW FIRE ALARM CONTROL MODULE.
2. ALL HVAC EQUIPMENT SHALL BE INTERCONNECTED WITH THE FIRE ALARM SYSTEM AND SHUT DOWN UPON FIRE ALARM SYSTEM, ACTIVATION. CONTRACTOR SHALL INTERFACE FIRE ALARM WITH ALL NEW UNITS.
3. CONTRACTOR SHALL INTEGRATE THE KITCHEN HOOD EXTINGUISHING SYSTEM WITH THE FIRE ALARM SYSTEM SUCH THAT THE FIRE ALARM STATUS IS ACTIVATED IN ACCORDANCE WITH NFPA REQUIREMENTS. PROVIDE AND INSTALL ALL ACCESSORIES AS REQUIRED.
4. CONTRACTOR SHALL INTEGRATE THE ELEVATOR CONTROLLER WITH THE FIRE ALARM SYSTEM FOR ELEVATOR RECALL. CONTRACTOR SHALL PROVIDE ALL REQUIRED COMPONENTS INCLUDING RELAYS, WIRING AND CONDUIT. CONTRACTOR SHALL COORDINATE WITH ELEVATOR MANUFACTURER/INSTALLER.

H2M architects + engineers

538 Broad Hollow Road, 4th Floor East
Melville, NY 11747
631.756.8000 • www.h2m.com
NY Architecture & Landscape Architecture: No Certificate Required
NY Engineering Certificate of Authorization No.: 0018178

CONSULTANTS:

MARK	DATE	DESCRIPTION

STATE OF NEW YORK · CHARLES J. STARKE · 093837 · LICENSED PROFESSIONAL ENGINEER

7/31/2025
Exp. Date

CHARLIE J. STARKE, P.E.
NY PROFESSIONAL ENGINEER Lic. No. 093837

"IN ACCORDANCE WITH ARTICLE 145, SECTION 7209 OF THE NYS EDUCATION LAW, ALTERATION OF THIS DOCUMENT EXCEPT BY A LICENSED PROFESSIONAL IS ILLEGAL"

DESIGNED BY:	DRAWN BY:	CHECKED BY:	REVIEWED BY:
VLV/INP	INP	VLV	CJS
PROJECT No: TRFD 2302	DATE: FEBRUARY 2025	SCALE: AS SHOWN	

CLIENT

THIELLS ROSEVILLE FIRE DISTRICT

NEW 26-100 FIRE HEADQUARTERS

THIELLS 26 FD

65 W RAMAPO ROAD
GARNERVILLE, NY 10923

CONTRACT

CONTRACT E
ELECTRICAL CONSTRUCTION

STATUS

FINAL BID DOCUMENT

SHEET TITLE

FIRE ALARM SECOND FLOOR PLAN

DRAWING No.

FA 101.00

C:\Users\hussain\Documents\TRFD2302_Central24-M_jhussainEBTR5.rvt

2/25/2025 2:00:11 PM

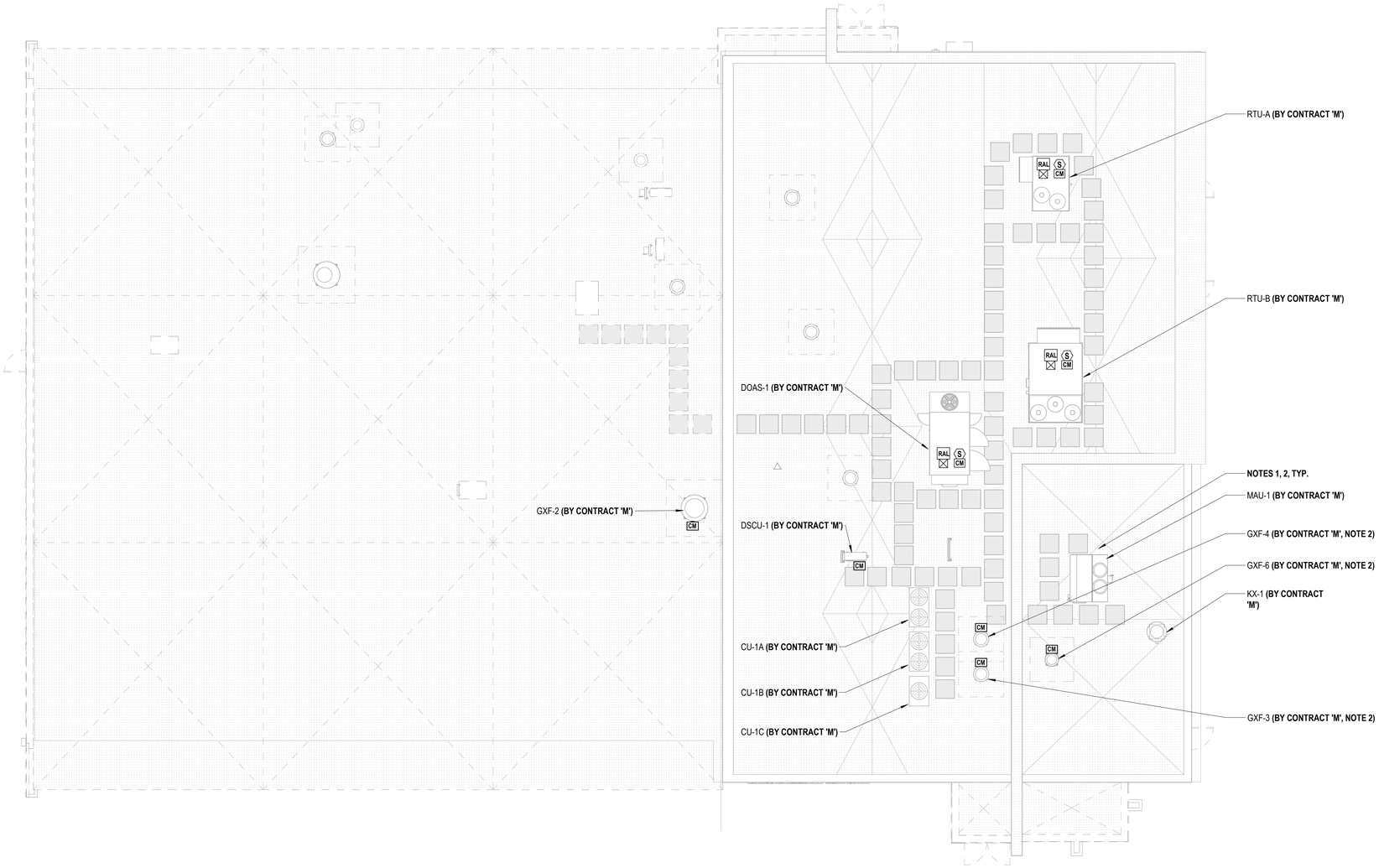

1 Electrical Fire Alarm Roof Power Plan

SCALE: 1/8" = 1'-0"

GENERAL NOTE:

G1. CONTRACTOR SHALL PROVIDE AND INSTALL NEW FIRE ALARM DEVICES AND ALL NECESSARY EQUIPMENT TO MAKE A PROPER CONNECTION TO NEW FIRE ALARM CONTROL PANEL "FACP" LOCATED ON THE FIRST FLOOR USING MANUFACTURER'S RECOMMENDED WIRING. CONTRACTOR SHALL PROVIDE POWER/DATA FEEDS TO NEW FIRE ALARM DEVICE LOCATIONS. PROVIDE AND INSTALL EXPANSION CARDS, WIRE/CONDUIT, RELAYS, POWER SUPPLIES, BATTERIES, EXTENDERS, PROGRAMMING, MOUNTING HARDWARE, AND JUNCTION BOXES AS REQUIRED. TYPICAL FOR ALL FIRE ALARM DEVICES.

NOTES:

1. CONTRACTOR SHALL PROVIDE AND INSTALL NEW FAN SHUTDOWN CONTROL MODULES, ALL ASSOCIATED RELAYS, WIRING AND CONDUIT, AND INTEGRATE WITH HVAC EQUIPMENT AND NEW FIRE ALARM CONTROL MODULE.

2. ALL HVAC EQUIPMENT SHALL BE INTERCONNECTED WITH THE FIRE ALARM SYSTEM AND SHUT DOWN UPON FIRE ALARM SYSTEM, ACTIVATION. CONTRACTOR SHALL INTERFACE FIRE ALARM WITH ALL NEW UNITS.

H2M architects + engineers

538 Broad Hollow Road, 4th Floor East
Melville, NY 11747
631.756.8000 • www.h2m.com
NY Architecture & Landscape Architecture: No Certificate Required
NY Engineering Certificate of Authorization No.: 0018178

CONSULTANTS:

MARK	DATE	DESCRIPTION

STATE OF NEW YORK · CHARLES J. STARKE · 093937 · LICENSED PROFESSIONAL ENGINEER

7/31/2025
Exp. Date

CHARLIE J. STARKE, P.E.
NY PROFESSIONAL ENGINEER Lic. No. 093937

"IN ACCORDANCE WITH ARTICLE 145, SECTION 7209 OF THE NYS EDUCATION LAW, ALTERATION OF THIS DOCUMENT EXCEPT BY A LICENSED PROFESSIONAL IS ILLEGAL"

DESIGNED BY:	DRAWN BY:	CHECKED BY:	REVIEWED BY:
VLV/ISH	ISH	VLV	CJS

PROJECT No:	DATE:	SCALE:
TRFD 2302	FEBRUARY 2025	AS SHOWN

CLIENT

THIELLS ROSEVILLE FIRE DISTRICT

NEW 26-100 FIRE HEADQUARTERS

THIELLS 26 FD

65 W RAMAPO ROAD GARNERVILLE, NY 10923

CONTRACT

CONTRACT E ELECTRICAL CONSTRUCTION

STATUS

FINAL BID DOCUMENT

SHEET TITLE

ROOF FIRE ALARM PLAN

DRAWING No.

FA 102.00

C:\Users\hussain\Documents\TRFD2302_Central23-M_jhussainEBT85.rvt

2/25/2025 2:00:12 PM