ABBREVIATIONS

AFF	ABOVE FINISHED FLOOR
BCU	BUILDING CONTROL UNIT
BTU	BRITISH THERMAL UNIT
CFH	CUBIC FEET PER HOUR
CFM	CUBIC FEET PER MINUTE
CLG	CEILING
COMM.	COMMUNICATION
CV	CONTROL VALVE
(D)	DEMOLISH
DB	DRY BULB
DCV	DEMAND CONTROLLED VENTILATION
DEG. F	DEGREES FAHRENHEIT
DIA	DIAMETER
DX	DIRECT EXPANSION
'E'	ELECTRICAL CONTRACTOR
(E)	EXISTING
EA	EACH
EAT	ENTERING AIR TEMPERATURE
EER	ENERGY EFFICIENCY RATING
ESP	EXTERNAL STATIC PRESSURE
FAI	FRESH AIR INTAKE
FD	FLOOR DRAIN
FLA	FULL LOAD AMPS
FT. H20	FEET OF WATER
'G'	GENERAL CONSTRUCTION CONTRACTOR
GPM	GALLONS PER MINUTE
GPH	GALLONS PER HOUR
H	HEIGHT
'H'	HVAC CONTRACTOR
HP	HORSEPOWER
IN.	INCHES
IN. W.C. (W.G.)	INCHES WATER COLUMN (WATER GAUGE)
KW	KILOWATTS
L	LENGTH
LAT	LEAVING AIR TEMPERATURE
LBS	POUNDS
LCD	LIQUID CRYSTAL DISPLAY
LDB	LEAVING DRY BULB TEMPERATURE
LWB	LEAVING WET BULB TEMPERATURE
LWT	LEAVING WATER TEMPERATURE
M	METER
MAX	MAXIMUM
MBH	1,000 BTU PER HOUR
MCA	MINIMUM CIRCUIT AMPACITY
MIN	MINIMUM
MNF	MANUFACTURER
N.C.	NORMALLY CLOSED
N.O.	NORMALLY OPEN
NFPA	NATIONAL FIRE PROTECTION ASSOCIATION
NPT	NATIONAL PIPE THREAD
NTS	NOT TO SCALE
OAI	OUTDOOR AIR INTAKE
OD	OUTER DIAMETER
OED	OPEN ENDED DUCT
'P'	PLUMBING CONTRACTOR
PD	PRESSURE DROP
PSIG	LBS / SQUARE INCH (GAUGE PRESSURE)
RD	ROOF DRAIN
RPM	REVOLUTIONS PER MINUTE
RPZ	REDUCED PRESSURE ZONE
SAT	SUPPLY AIR TEMPERATURE
SEER	SEASONAL ENERGY EFFICIENCY RATING
TEMP	TEMPERATURE
TG	TRANSFER GRILLE
TYP	TYPICAL
VFD	VARIABLE FREQUENCY DRIVE
W	WIDTH
WB	WET BULB
WMS	WIRE MESH SCREEN

DUCTWORK LEGEND

SYMBOL	ABBREV	DESCRIPTION
		DUCTWORK BRANCH CONNECTION
	VD	VOLUME DAMPER
	CD	ROUND FACE SUPPLY DIFFUSER
	SEE AIR DEVICE SCHEDULE	SIDEWALL SUPPLY, RETURN OR EXHAUST GRILLE/REGISTER
	SEE AIR DEVICE SCHEDULE	SQUARE FACE SUPPLY DIFFUSER
	SEE AIR DEVICE SCHEDULE	BOTTOM RETURN OR EXHAUST GRILLE/REGISTER
	FC	FLEXIBLE CONNECTION
		TURNING VANES
		RECTANGULAR TO ROUND TRANSITION
	AL	ACOUSTICAL LINING
		END CAP
	SEE AIR DEVICE SCHEDULE	SUPPLY DIFFUSER WITH DIRECTIONAL FLOW (SOLID HATCH INDICATES BLANK OFF PANEL)
		SUPPLY DUCT DROP (TURN DOWN)
		RETURN/EXHAUST DUCT DROP (TURN DOWN)
		SUPPLY DUCT RISE
		RETURN/EXHAUST DUCT RISE
DSD	DSD	DUCT SMOKE DETECTOR
M	MD	MOTORIZED DAMPER WITH ACTUATOR
OR	AD	ACCESS DOOR
	FD/AD	FIRE DAMPER WITH ACCESS DOOR
	FSD/AD	FIRE SMOKE DAMPER WITH ACCESS DOOR
		FAN

CONTROLS LEGEND

SYMBOL	ABBREV	DESCRIPTION
C		CARBON MONOXIDE SENSOR
T		THERMOSTAT
S		DIGITAL TEMPERATURE SENSOR
N		NITROGEN DIOXIDE
CZ		CARBON DIOXIDE SENSOR

PIPING LEGEND

SYMBOL	ABBREV	DESCRIPTION
		NEW WORK
		PIPING DOWN/ PIPING UP

GENERAL NOTES

1. PROVIDE ALL MATERIALS AND EQUIPMENT AND PERFORM ALL LABOR REQUIRED TO INSTALL COMPLETE AND OPERABLE MECHANICAL SYSTEMS AS INDICATED ON THE DRAWINGS, AS SPECIFIED AND AS REQUIRED BY CODE.
2. THE CONTRACTOR, BY PRESENTING THEIR BID FOR THE WORK, REPRESENTS THAT HE/SHE HAS INSPECTED THE SITE AND IS COMPLETELY FAMILIAR WITH THE SCOPE OF WORK AND ALL FIELD CONDITIONS RELATED TO, AND AFFECTING THE WORK AND ITS PERFORMANCE. EXCEPTIONS AFFECTING THE WORK AND ITS PERFORMANCE, OR CONFLICTS BETWEEN FIELD CONDITIONS, SHALL BE BROUGHT TO THE ATTENTION OF THE ARCHITECT PRIOR TO THE SUBMISSION OF BIDS.
3. PERFORM ALL WORK IN ACCORDANCE WITH THE PLUMBING CODE, FIRE CODE, MECHANICAL CODE, ENERGY CONSERVATION CONSTRUCTION CODE, AND FUEL GAS CODE OF NEW YORK STATE AND THE REQUIREMENTS OF THE LOCAL AUTHORITIES HAVING JURISDICTION.
4. COMPLY WITH THE NATIONAL ELECTRIC CODE AND THE REQUIREMENTS OF DIVISION 26 FOR ALL ELECTRICAL INSTALLATIONS.
5. FIRE STOP ALL OPENINGS IN FIRE RATED CONSTRUCTION FOR PIPING, DUCTWORK, CONDUIT, ETC. PROVIDE FIRE DAMPERS AND ACCESS DOORS IN ALL OPENINGS IN FIRE RATED FLOORS, PARTITIONS, AND WALLS FOR DUCTWORK AS PER THE MECHANICAL CODE OF NEW YORK STATE. (SEE ARCHITECTURAL DRAWINGS FOR LOCATIONS OF FIRE RATED CONSTRUCTION.)
6. DO NOT SCALE DRAWINGS. DRAWINGS FOR HVAC WORK ARE DIAGRAMMATIC AND ARE INTENDED TO CONVEY SCOPE AND GENERAL ARRANGEMENT ONLY. THE LOCATIONS OF ALL ITEMS SHOWN ON THE DRAWINGS OR CALLED FOR IN THE SPECIFICATIONS THAT ARE NOT DEFINITELY FIXED BY DIMENSIONS ARE APPROXIMATE. COORDINATE CONTRACT DOCUMENTS, PROJECT REQUIREMENTS, WORK OF OTHERS, AND EQUIPMENT AND MATERIALS PURCHASED WITH FIELD DIMENSIONS. INSTALL ALL EQUIPMENT AS PER MANUFACTURER'S REQUIREMENTS TO PROVIDE PROPER CLEARANCE FOR INSTALLATION, OPERATION, AND MAINTENANCE. CONTRACTOR'S INTENDED MEANS AND METHODS OF INSTALLATION AND CONTRACTOR'S FABRICATED ITEMS SHALL ENSURE A PROPER "FIT" AND INSTALLATION. BRING ANY CONFLICTS TO THE ATTENTION OF THE ARCHITECT/ENGINEER DURING THE SUBMITTAL PHASE FOR RESOLUTION PRIOR TO PURCHASING ANY EQUIPMENT.
7. MAINTAIN MAXIMUM HEADROOM AND SPACE CONDITIONS AT ALL POINTS. WHERE HEADROOM AND SPACE CONDITIONS APPEAR INADEQUATE, NOTIFY THE ARCHITECT/ENGINEER PRIOR TO PROCEEDING WITH INSTALLATION. MAINTAIN A MINIMUM OF 6'-8" CLEARANCE FROM FINISHED FLOOR TO UNDERSIDE OF PIPES, DUCTS, CONDUITS, SUSPENDED EQUIPMENT, ETC., THROUGHOUT ACCESS ROUTES IN MECHANICAL ROOMS.
8. FIELD VERIFY AND COORDINATE ALL DUCT AND PIPING DIMENSIONS BEFORE FABRICATION. MAKE MODIFICATIONS IN THE LAYOUT AS NEEDED TO PREVENT CONFLICT WITH WORK OF OTHER TRADES OR FOR PROPER EXECUTION OF THE WORK. OBTAIN THE APPROVAL OF THE ARCHITECT/ENGINEER FOR MODIFICATIONS.
9. PROVIDE PRODUCTS OF ONE MANUFACTURER WHERE TWO OR MORE ITEMS OF THE SAME TYPE OF MATERIAL OR EQUIPMENT IS REQUIRED.
10. INSTALL ALL EQUIPMENT AND APPURTENANCES IN ACCORDANCE WITH MANUFACTURER'S RECOMMENDATIONS, CONTRACT DOCUMENTS, AND APPLICABLE CODES AND REGULATIONS. REFER TO DETAILS FOR ADDITIONAL PIPING AND EQUIPMENT INSTALLATION REQUIREMENTS.
11. LOCATE ALL TEMPERATURE, PRESSURE, AND FLOW MEASURING DEVICES IN ACCESSIBLE LOCATIONS WITH STRAIGHT SECTION OF PIPE OR DUCT UP- AND DOWNSTREAM AS RECOMMENDED BY THE MANUFACTURER TO ENSURE MANUFACTURER CERTIFIED ACCURACY.
12. COORDINATE ALL EQUIPMENT CONNECTIONS WITH MANUFACTURER'S CERTIFIED DRAWINGS. COORDINATE AND PROVIDE ALL PIPING AND DUCT TRANSITIONS REQUIRED FOR FINAL CONNECTIONS TO EQUIPMENT.
13. COORDINATE LOCATIONS AND SIZES OF ALL FLOOR, WALL, AND ROOF OPENINGS WITH ALL OTHER TRADES. COORDINATE ALL PIPING AND EQUIPMENT SUPPORTED FROM STRUCTURE WITH GENERAL CONSTRUCTION WORK.
14. COORDINATE INSTALLATION OF SUPPLY, RETURN AND EXHAUST GRILLES WITH INSTALLATION OF FINISHED CEILINGS.
15. COMPLETE ALL PRESSURE TESTS BEFORE ANY MECHANICAL EQUIPMENT, DUCTWORK, OR PIPING INSULATION IS APPLIED.
16. TESTING, ADJUSTING, AND BALANCING AGENCY SHALL BE A MEMBER OF THE ASSOCIATED AIR BALANCE COUNCIL (AABC) OR THE NATIONAL ENVIRONMENTAL BALANCING BUREAU (NEBB). PERFORM ALL TESTING, ADJUSTING, AND BALANCING IN ACCORDANCE WITH THE SPECIFICATIONS.
17. MAKE ALL ATTACHMENTS TO JOISTS, TRUSSES, OR JOIST GIRDERS AT PANEL POINTS. PROVIDE BEAM CLAMPS MEETING MSS STANDARDS. THE USE OF C-CLAMPS IS NOT PERMITTED.
18. PROVIDE TRAPPED DRAIN PIPING FROM DRAIN PANS OF ALL COOLING COILS, FANS, AND OTHER ACTIVE DRAINS EXPOSED TO SYSTEM AIR STREAM. PROVIDE TRAP AT CONNECTION, WATER SEAL DEPTH 1 INCH GREATER THAN UNIT OPERATING PRESSURE. DIRECT DRAINS TO NEAREST FLOOR DRAIN, MOP SINK, OR OTHER LOCATION APPROVED BY THE ARCHITECT/ENGINEER.
19. PROVIDE ALL LOUVERS FOR INSTALLATION. SUBMIT LOUVER COLOR AND CONFIGURATION TO THE ARCHITECT/ENGINEER FOR APPROVAL.
20. FURNISH AND INSTALL ALL NECESSARY CONTROL WIRING, CONDUIT, AND ACCESSORIES AS REQUIRED TO PROVIDE FULLY FUNCTIONING SYSTEMS AND SEQUENCES OF OPERATION.
21. FURNISH ALL LINTELS FOR DUCT AND PIPE PENETRATIONS IN INTERIOR MASONRY WALLS.
22. FURNISH ALL SLEEVES FOR PIPE AND CONDUIT FLOOR, WALL, PARTITION, AND ROOF PENETRATIONS.
23. FURNISH ALL DUCT PENETRATIONS.
24. PERFORM ALL CUTTING AND ROUGH PATCHING AS REQUIRED IN THE EXECUTION OF THE WORK. PERFORM ALL FINISH PATCHING AND FLASHING.

LEGENDS/ABBREVIATIONS NOTES

1. ABBREVIATIONS AND SYMBOLS ON THIS SHEET DO NOT DEFINE THE SCOPE OF WORK.

H2M architects + engineers

538 Broad Hollow Road, 4th Floor East
Melville, NY 11747
631.756.8000 • www.h2m.com

CONSULTANTS:

MARK	DATE	DESCRIPTION

STATE OF NEW YORK · JOHN LAHEY · 101303 · LICENSED PROFESSIONAL ENGINEER

"ALTERATION OF THIS DOCUMENT EXCEPT BY A LICENSED PROFESSIONAL IS ILLEGAL"

DESIGNED BY:	DRAWN BY:	CHECKED BY:	REVIEWED BY:
MJV	MJV	MJV	JML

PROJECT No.:	DATE:	SCALE:
VGFD2001	JULY 2022	AS SHOWN

CLIENT

VAILS GATE FIRE DISTRICT

New Storage Building (Phase I)
New Fire Station (Phase II)

872 Blooming Grove Turnpike
New Windsor, NY 12553

CONTRACT

CONTRACT G
GENERAL CONSTRUCTION

STATUS

FINAL BID DOCUMENT

SHEET TITLE

MECHANICAL COVER SHEET AND NOTES

DRAWING No.

M1 001.00

X:\VGFD\Vails Gate Fire Dept\VGFD2001-\Vails Gate FD\New Firehouse\02-BIM-CADD\Cnc-docs\hvac_Storage Building\M1001.00 - Mechanical Cover Sheet.dwg Last Modified: May 06, 2022 - 10:39am Plotted on: Jul 15, 2022 - 1:07pm By: ctagone

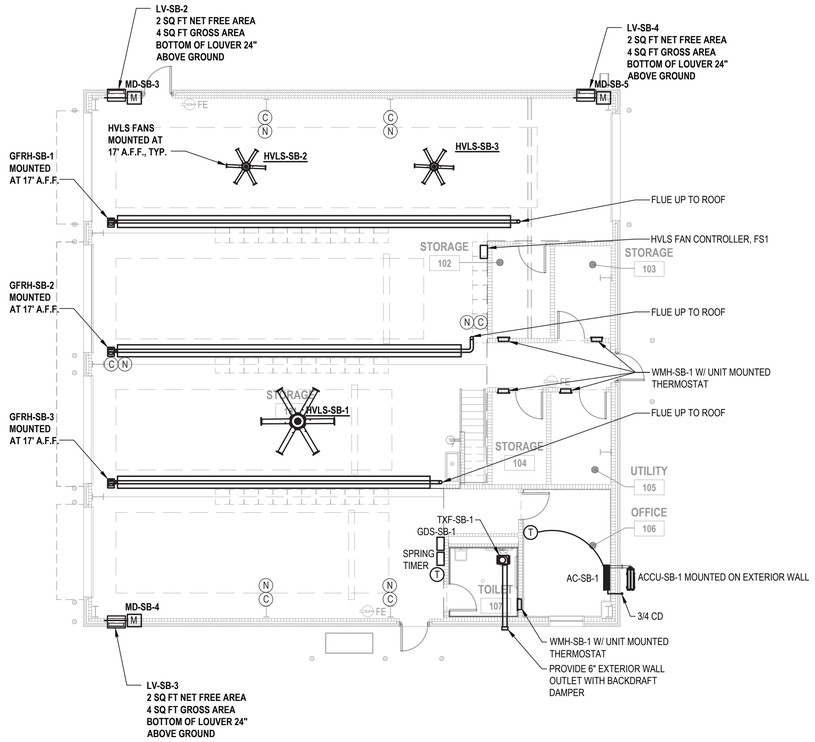

1 **Storage Building Mechanical Plan**
SCALE: 1/8" = 1'-0"

COMBUSTION AIR INDEX BASED ON 2020 NEW YORK STATE MECHANICAL CODE

ROOM NAME	SERVED BY	OCCUPANCY CLASSIFICATION	FLOOR AREA (FT^2)	SPACE VOLUME (FT^3)	CODE VOLUME PER 1,000 MBH INPUT (FT^3)	GAS INPUT (MBH)	VOLUME REQUIRED (FT^3)	NOTES
APPARATUS BAY	GFRH-SB-1,2,3	GARAGE	2650	79500	50	300	15000	SUFFICIENT VOLUME

NATURAL VENTILATION CALCULATION - OFFICE

IN ACCORDANCE WITH SECTION 402.2 OF THE 2020 NYS MECHANICAL CODE:
THE MINIMUM OPENABLE AREA TO THE OUTDOORS SHALL BE 4 PERCENT OF THE FLOOR AREA BEING VENTILATED.

FLOOR AREA * 0.04 = REQUIRED OPENABLE WINDOW AREA

135 SF * 0.04 = 5.94 SF AREA REQUIRED

TOTAL OPENABLE WINDOW AREA IN SPACE: 6 SF - COMPLIES

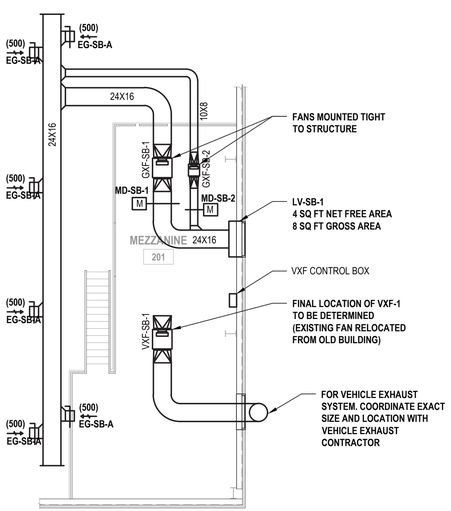

2 **Mezzanine Mechanical Plan**
SCALE: 1/8" = 1'-0"

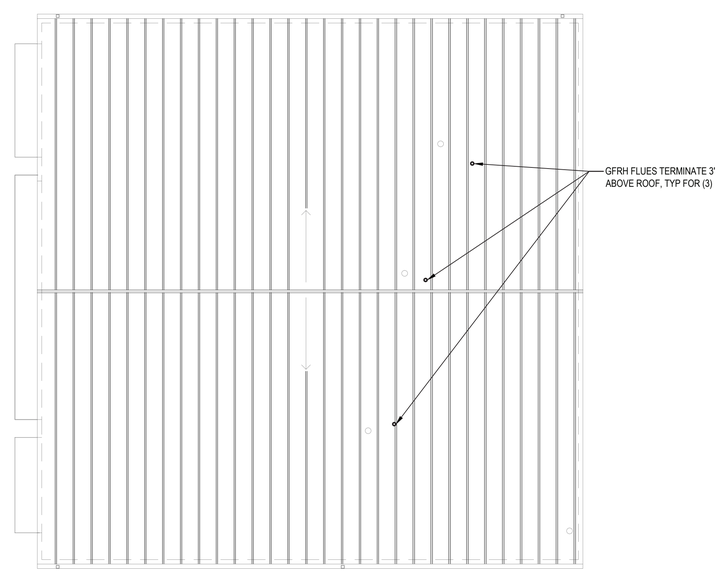

3 **Proposed Roof Plan**
SCALE: 1/8" = 1'-0"

H2M architects + engineers
538 Broad Hollow Road, 4th Floor East
Melville, NY 11747
631.756.8000 • www.h2m.com

CONSULTANTS:

MARK	DATE	DESCRIPTION

STATE OF NEW YORK • JOHN LAHEY • 101303 • LICENSED PROFESSIONAL ENGINEER

"ALTERATION OF THIS DOCUMENT EXCEPT BY A LICENSED PROFESSIONAL IS ILLEGAL"

DESIGNED BY:	DRAWN BY:	CHECKED BY:	REVIEWED BY:
MJV	MJV	MJV	JML

PROJECT No.:	DATE:	SCALE:
VGFD2001	JULY 2022	AS SHOWN

CLIENT
VAILS GATE FIRE DISTRICT

New Storage Building (Phase I)
New Fire Station (Phase II)

872 Blooming Grove Turnpike
New Windsor, NY 12553

CONTRACT
CONTRACT G
GENERAL CONSTRUCTION

STATUS
FINAL BID DOCUMENT

SHEET TITLE
FIRST FLOOR, MEZZANINE, & ROOF MECHANICAL PLANS

DRAWING No.
M1 100.00

X:\VGFD\Vails Gate Fire Dept\VGFD2001 (Vails Gate FD New Firehouse)\02-BIM-CADD\Con-docs\hvac_Storage Building\M-100.00 - Mechanical Floor Plan.dwg Last Modified: May 06, 2022 - 10:39am Plotted on: Jul 15, 2022 - 1:07pm By drapone

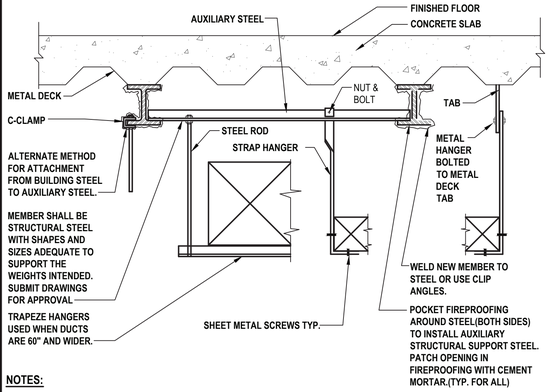

NOTES:

1. DUCTS SHALL NOT BE HUNG FROM OR SUPPORTED BY HUNG CEILING.
2. FOR DUCTS NOT EXCEEDING 2 SQ. FT. IN CROSS- SECTIONAL AREA, HANGERS SHALL BE OF METAL NOT LESS THAN 1/16".
3. FOR DUCTS LARGER THAN 2 SQ. FT. IN CROSS- SECTIONAL AREA, HANGERS SHALL BE OF METAL NOT LESS THAN 1" x 1/8".
4. FOR ALL DUCTS, HANGERS SHALL BE TURNED UNDER AND FASTENED TO THE BOTTOM OF DUCTS AS SHOWN ABOVE.
5. WHERE CROSS-SECTIONAL AREA OF DUCT EXCEEDS 8 SQ. FT., HANGERS SHALL BE SPACED NOT MORE THAN 4 FT. ON CENTERS.

1 Duct Support Attachment to I-Beam

SCALE: NTS (DETAIL #)

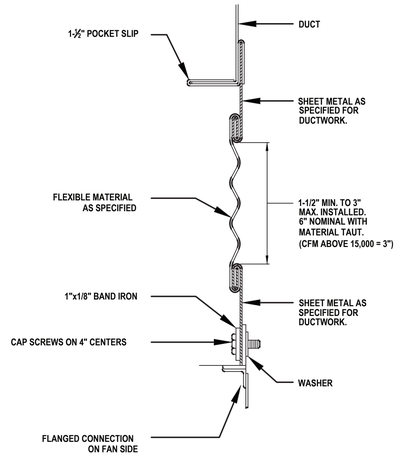

2 Flexible Duct Connection Detail

SCALE: NTS

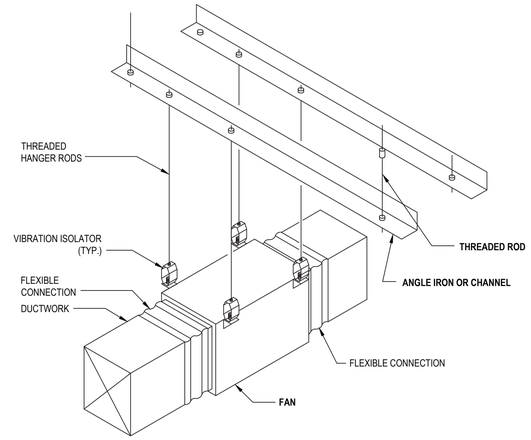

3 Inline Fan Hanging Support Detail

SCALE: NTS

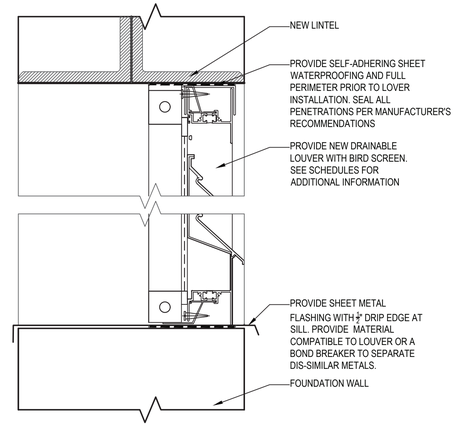

4 Typical Louver Detail

SCALE: NTS

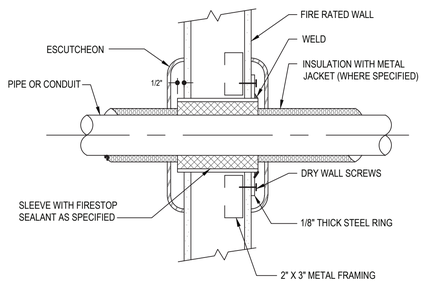

5 Pipe or Conduit Penetration Through Fire Rated Walls

SCALE: NTS (DETAIL #)

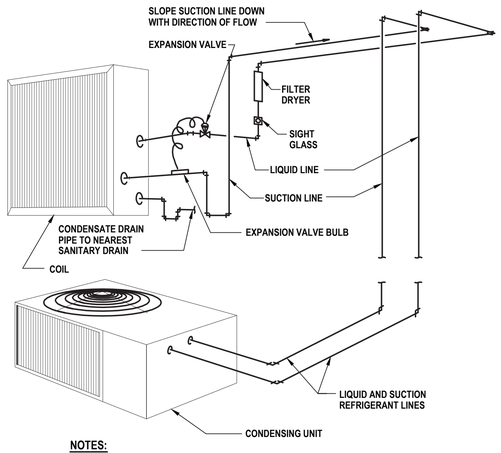

NOTES:

1. CONFORM TO MANUFACTURER'S RECOMMENDATIONS FOR PIPE SIZING AND INSTALLATION.
2. SINGLE CIRCUIT SHOWN, MULTIPLE CIRCUIT INSTALLATIONS SIMILAR.

6 Refrigerant Piping Detail

SCALE: NTS

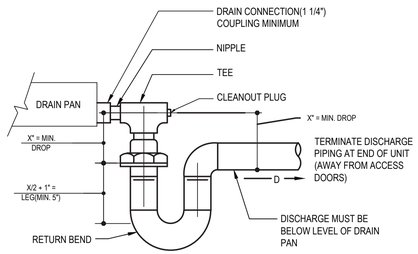

X = NEGATIVE INTERNAL STATIC PRESSURE AT FAN INLET(IN.)

NOTES:

1. ALLOW SUFFICIENT SPACE BELOW DRAIN PAN FOR TRAP.
2. PITCH DRAIN FOR PROPER RUN-OFF.
3. MANUALLY PRIME FILL TRAP BEFORE START-UP TO FORM INITIAL DRAIN SEAL.
4. SUPPORT LENGTHY DRAIN LINES TO PREVENT SAG AND CONDENSATE OVERFLOW.
5. PROVIDE DRAIN SEAL AT EACH AC UNIT.

7 Drain Pan Water Seal Piping Draw-Thru Unit

SCALE: NTS (DETAIL #)

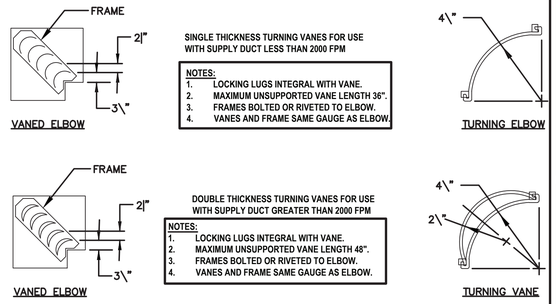

SINGLE THICKNESS TURNING VANES FOR USE WITH SUPPLY DUCT LESS THAN 2000 FPM

NOTES:

1. LOCKING LUGS INTEGRAL WITH VANE.
2. MAXIMUM UNSUPPORTED VANE LENGTH 36".
3. FRAMES BOLTED OR RIVETED TO ELBOW.
4. VANES AND FRAME SAME GAUGE AS ELBOW.

DOUBLE THICKNESS TURNING VANES FOR USE WITH SUPPLY DUCT GREATER THAN 2000 FPM

NOTES:

1. LOCKING LUGS INTEGRAL WITH VANE.
2. MAXIMUM UNSUPPORTED VANE LENGTH 48".
3. FRAMES BOLTED OR RIVETED TO ELBOW.
4. VANES AND FRAME SAME GAUGE AS ELBOW.

8 Turning Vanes For Square Elbows

SCALE: NTS

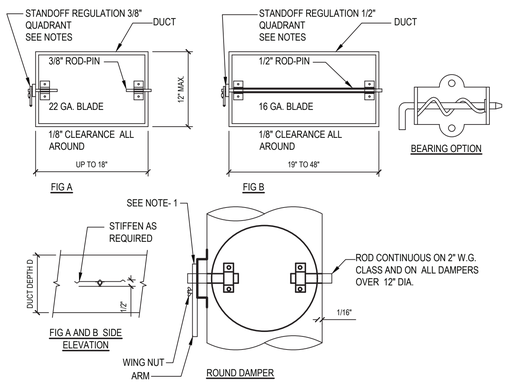

NOTES:

1. PROVIDE 2" HIGH STANDOFF REGULATORS FOR EXTERNALLY INSULATED DUCTWORK. PROVIDE REGULATORS WITH SEALS. DURO-DYNE MODEL E50.
2. STANDOFF BASE HEIGHT TO MATCH INSULATION THICKNESS. BASE CONSTRUCTION 16 GAUGE.
3. RAPIT DAMPER REGULATORS AND JIFFY DAMPERS ARE NOT ACCEPTABLE ON RECTANGULAR OR ROUND DUCTWORK.

9 Volume Dampers - Single Blade Type

SCALE: NTS (DETAIL #)

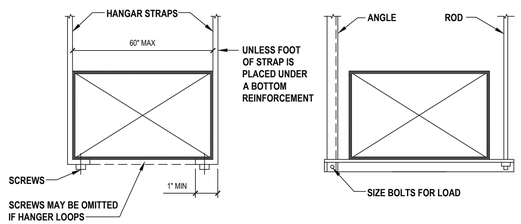

NOTES:

1. SIZE ALL SUPPORTS IN ACCORDANCE WITH THE SMACNA DUCT CONSTRUCTION STANDARDS, LATEST EDITION.

10 Hanger Detail

SCALE: NTS

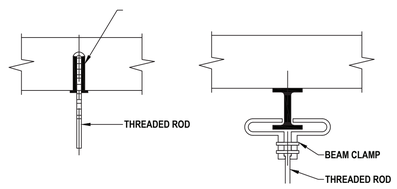

11 PIPE HANGER SUPPORT DETAIL

SCALE: NTS

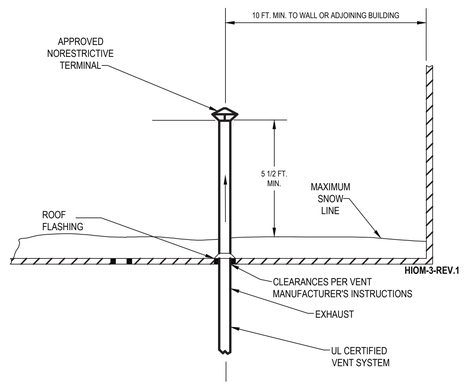

12 Vertical Venting for Direct Vent System

SCALE: NTS

H 2 M architects + engineers

538 Broad Hollow Road, 4th Floor East
Melville, NY 11747
631.756.8000 • www.h2m.com

CONSULTANTS:

MARK	DATE	DESCRIPTION

STATE OF NEW YORK · JOHN LAHEY · 101303 · LICENSED PROFESSIONAL ENGINEER

"ALTERATION OF THIS DOCUMENT EXCEPT BY A LICENSED PROFESSIONAL IS ILLEGAL"

DESIGNED BY:	DRAWN BY:	CHECKED BY:	REVIEWED BY:
MJV	MJV	MJV	JML

PROJECT No.:	DATE:	SCALE:
VGFD2001	JULY 2022	AS SHOWN

CLIENT

VAILS GATE FIRE DISTRICT

New Storage Building (Phase I)
New Fire Station (Phase II)

872 Blooming Grove Turnpike
New Windsor, NY 12553

CONTRACT

CONTRACT G
GENERAL CONSTRUCTION

STATUS

FINAL BID DOCUMENT

SHEET TITLE

MECHANICAL DETAILS SHEET

DRAWING No.

M1 510.00

X:\VGFD\Vails Gate Fire Dept\VGFD2001-(Vails Gate FD New Firehouse)\02-BIM-CADD\Cmc-docs\mec_Storage Building\M 510.00 - Mechanical Details.dwg Last Modified: May 26, 2022 - 10:39am Plotted on: Jul 15, 2022 - 1:07pm By: dragone

EXHAUST FANS

FAN NO.	SYSTEM SERVED	PERFORMANCE/CONSTRUCTION REQUIREMENTS				BASIS OF DESIGN INFORMATION						REMARKS
		CFM	EXT S. P. (IN. W.C.)	FAN/MOTOR RPM	BHP	MNF	MODEL NO.	NOMINAL DIMENSION (DIA" x H") (L" x W" x H")	WEIGHT (LBS.)	ELECTRICAL DATA VOLTS /PHASE	ELECTRICAL DATA MOTOR HP	
GXF-SB-1	APPARATUS BAY	3,000	1.0	1,725	0.98	GREENHECK	SQ-160-VG	29 x 26 x 26	163	208/1	2	1,3,4,6,7,8
GXF-SB-2	APPARATUS BAY	200	0.1	1,725	0.01	GREENHECK	SQ-80-VG	19 x 15 x 15	49	115/1	1/10	1,2,6,11
TXF-SB-1	BATHROOM	80	0.1	900	18W	GREENHECK	SP-B80	15 x 14 x 7	9	115/1	18W	1,7,10
VXF-SB-1	VEHICLE EXHAUST	-	-	-	-	-	-	-	-	240/3	10	1,5,9

NOTES:
1. MANUFACTURER PROVIDED DISCONNECT SWITCH.
2. PROVIDE WITH 115VAC MOTORIZED DAMPER WITH END SWITCH AND END SEALS.
3. PROVIDE WITH 208-230VAC MOTORIZED DAMPER WITH END SWITCH AND END SEALS.
4. FAN TO OPERATE BASED ON SIGNALS FROM INTERLOCKED TEMPERATURE SENSOR OR GAS DETECTIONS SYSTEM OR 30-MINUTE SPRING TIMER.
5. ELECTRICAL CONTRACTOR TO PROVIDE WITH HOA SWITCH
6. PROVIDE WITH DIAL FOR BALANCING ONLY
7. ELECTRICAL CONTRACTOR TO PROVIDE TIME CLOCK AND SPRING TIMER
8. MANUFACTURER TO PROVIDE THERMOSTAT
9. VXF FOR INFORMATION ONLY. FAN TO BE RELOCATED FROM EXISTING FIREHOUSE BY OTHERS. VENDOR TO PROVIDE CONTROLS.
10. PROVIDE WITH GRAVITY BACKDRAFT DAMPER.
11. FAN TO RUN 24/7.

MOTORIZED DAMPERS

EQMT. TAG	PERFORMANCE/CONSTRUCTION REQUIREMENTS					BASIS OF DESIGN INFORMATION							REMARKS
	CFM	EXT S. P. (IN. W.C.)	FACE VELOCITY (FPM)	FRAME THICKNESS	FAILURE MODE	MNF	MODEL NO.	ACTUATOR MNF	ACTUATOR MODEL NO.	ACTUATOR COUNT	ELECTRICAL DATA VOLTAGE	ELECTRICAL DATA POWER DRAW (W)	
MD-SB-1	3,000	0.116	1,000	16 GAUGE	CLOSED	GREENHECK	VCD-23	HONEYWELL	MS4104F1010	1	208/1	18	1,2,3
MD-SB-2	200	0.068	675	16 GAUGE	CLOSED	GREENHECK	VCD-23	HONEYWELL	MS4104F1010	1	115/1	18	1,2,4
MD-SB-3	1000	0.068	675	16 GAUGE	CLOSED	GREENHECK	VCD-23	HONEYWELL	MS4104F1010	1	115/1	18	1,2,3
MD-SB-4	1000	0.068	675	16 GAUGE	CLOSED	GREENHECK	VCD-23	HONEYWELL	MS4104F1010	1	115/1	18	1,2,3
MD-SB-5	1000	0.068	675	16 GAUGE	CLOSED	GREENHECK	VCD-23	HONEYWELL	MS4104F1010	1	115/1	18	1,2,3

NOTES:
1. TWO POSITION W/ SPRING RETURN.
2. PROVIDE WITH STANDARD SLEEVE.
3. INTERLOCK WITH GXF-1.
4. INTERLOCK WITH GXF-2.
5. INTERLOCK WITH VXF-1.

VENTILATION INDEX BASED ON 2020 NEW YORK STATE MECHANICAL CODE

ROOM NAME	SERVED BY	OCCUPANCY CLASSIFICATION	FLOOR AREA (SF)	OCCUPANCY LOAD (PERSONS/1000 SF)	NUMBER OF OCCUPANTS	OCCUPANT BASED OA RATE (CFM/OCCUPANT)	AREA BASED OUTSIDE AIR RATE (CFM/SF)	EXHAUST RATE (CFM/SF)	Ez EFFICIENCY FACTOR (HEATING)	UNCORRECTED OA REQUIRED (CFM)	CORRECTED OA [HEATING] (CFM)	EXHAUST REQUIRED (CFM)	NOTES
APPARATUS BAY	GXF-SB-1	GARAGE	2650	N/A	N/A	N/A	0.00	0.75	1.0	N/A	N/A	1988	
MEZZANINE STORAGE	GXF-SB-1	GARAGE	750	N/A	N/A	N/A	0.00	0.75	1.0	N/A	N/A	563	
OFFICE	-	OFFICE	143	5	2	5	0.06	0.00	0.8	19	24	N/A	NATURAL VENTILATION

AIR INLETS & OUTLETS

SYMBOL	BASIS OF DESIGN: MNF/ MODEL NO.	TYPE	FACE SIZE (IN)	AIR FLOW RANGE (CFM)	NECK SIZE DIAMETER (IN.)	NOTES
EG-SB-A (CFM)	TITUS 350RL	SIDEWALL EXHAUST GRILLE	16" x 10"	300-500	-	1,2

NOTES:
1. PROVIDE VOLUME DAMPERS FOR ALL INLETS AND OUTLETS.
2. COORDINATE ALL COLORS WITH ARCH.

REFRIGERANT DENSITY CALCS

SYSTEM	EFFECTIVE PIPE LENGTH (FT.)	EFFECTIVE FURTHEST PIPE RUN (FT.)	TOTAL # OF ELBOWS	TOTAL REFR. (LBS)	ZONE SMALLEST SPACE, TOTAL AREA (SQFT.)	ZONE SMALLEST SPACE, TOTAL VOLUME (FT^3)	REFRIGERANT DENSITY ($LB/1000FT^3$)
ACCU-SB-1	50	50	0	2.6	143	1,144	2.27

NOTES:
1. REFRIGERANT LINE LENGTHS, SIZES & CHARGES TO BE VERIFIED BY EQUIPMENT MANUFACTURER.
2. CONTRACTOR TO NOTIFY ENGINEER IF ADDITIONAL SYSTEM CHARGE IS REQUIRED.

CONDENSING UNITS

EQMT NO.	LOCATION	INDOOR UNITS SERVED	PERFORMANCE/ CONSTRUCTION REQUIREMENTS						BASIS OF DESIGN INFORMATION							NOTES
			SEER	EER	REFRIGERANT	REMOTE CONDENSING UNIT COOLING PERFORMANCE TOTAL CAPACITY (MBH)	MIN OPER. TEMP. (°F)	MAX OPER. TEMP. (°F)	MNF	MODEL NO.	NOMINAL DIMENSIONS L x W x H (IN.)	NOMINAL OPERATING WEIGHT (LBS.)	ELECTRICAL DATA VOLTS/ PHASE	MCA	MOCP	
ACCU-SB-1	EXTERIOR MOUNTED TO BUILDING	AC-1	17	10.98	R410A	9	14	118	LG	LSU090HFV3	10 x 29 x 20	55	208/1	10	15	1-7

NOTES:
1. CONTRACTOR TO PROVIDE MOUNTING TO BUILDING.
2. PROVIDE ALL REFRIGERANT PIPING SPECIALTIES AS PER THE MANUFACTURER'S INSTALLATION INSTRUCTIONS.
3. CONTRACTOR TO PROVIDE DISCONNECT SWITCH FOR OUTDOOR UNIT.
4. PROVIDE REFRIGERANT PIPING W/ INSULATION BETWEEN CONDENSER AS PER THE NEW YORK STATE ENERGY CODE.
5. MANUFACTURER TO PROVIDE BUILT-IN BASE PAN HEATER
6. MANUFACTURER TO PROVIDE BACNET CARD.
7. CONDENSING UNIT SHALL POWER EVAPORATOR UNIT.

SPLIT EVAPORATING UNITS

UNIT TAG	UNIT LOCATION	TYPE	SERVED BY	PERFORMANCE/ CONSTRUCTION REQUIREMENTS								BASIS OF DESIGN INFORMATION						NOTES
				REFRIGERANT	SUPPLY UNIT DATA DRY AIRFLOW (CFM) [HI-MED-LO]	EXTERNAL STATIC (IN. W.C.) [HI TO LO]	FAN POWER (A)	SOUND LEVEL LOW TO HIGH dB(A)	NOMINAL SIZE (MBH)	TOTAL COOLING CAPACITY (MBH)	HEATING CAPACITY AT 19F (MBH)	MANUF.	MODEL	NOMINAL DIMENSIONS L" x W" x H"	NOMINAL OPERATING WEIGHT (LBS.)	LIQUID - GAS CONNECTIONS (IN. OD)	CONDENSATE CONNECTION (IN. ID)	
AC-SB-1	OFFICE	WALL MOUNTED	ACCU-1	R410A	353/264/148	0.20	0.4	28/36/42	9	9.0	8.8	LG	LSN090HFV3	33 x 6 x 12	20.0	1/4 - 3/8	1	1-4

NOTES:
1. MANUFACTURER TO PROVIDE HARDWIRED, WALL MOUNTED, PROGRAMMABLE THERMOSTAT. THERMOSTAT SETPOINT TO BE SET TO 75°F (ADJUSTABLE BY END USER)
2. DRAIN PAN LEVEL SENSOR MODEL SS610E. THE UNIT SHALL TURN OFF IF WATER IS SENSED.
3. INSTALL ALL EQUIPMENT AND COMPONENTS ACCORDING TO MANUFACTURER'S INSTRUCTIONS.
4. POWERED BY PAIRED CONDENSER, PROVIDE DISCONNECT SWITCH MODEL TAZ-MS303 BETWEEN INDOOR AND OUTDOOR UNIT.

RADIANT HEATERS

EQUIPMENT NO.	LOCATION	CONFIGURATION	FAN DATA CURRENT	FAN DATA VOLTS/ PHASE	TOTAL CAPACITY (MBH)	HEATING DATA NATURAL GAS INPUT CFH	HEATING DATA NATURAL GAS MIN. PRESSURE (WC)	HEATING DATA NATURAL GAS MAX. PRESSURE (WC)	BASIS OF DESIGN INFORMATION MNF	MODEL NO.	NOMINAL DIMENSIONS L x W x H	NOMINAL OPERATING WEIGHT (LBS.)	REMARKS
GFRH-SB-1,2,3	SEE PLAN	CEILING HUNG	1.8A	120/1	80	100	5	14	REZNOR	VPSN80A	VARIES x 16 x 16	APPRX 60	1-6

NOTES:
1. REMOTE WALL MOUNTED THERMOSTAT.
2. UNIT MOUNTED DISCONNECT SWITCH.
3. ELECTRONIC PROGRAM START UP WITH SPARK IGNITION.
4. OPERATION INDICATOR LIGHTS
5. FLUE SHALL HAVE MAXIMUM 2 ELBOWS.
6. INTERLOCK WITH BAY DOORS. IF ONE DOOR IS OPEN, HEATERS SHALL TURN OFF UNTIL ALL DOORS ARE PROVEN CLOSED.

HIGH VOLUME LOW SPEED FANS

FAN NO.	AREA SERVED	PERFORMANCE REQUIREMENTS	BASIS OF DESIGN INFORMATION							REMARKS
		FAN/MOTOR RPM	MNF	MODEL NO.	NOMINAL DIMENSIONS (DIA" x H")	WEIGHT (LBS.)	ELECTRICAL DATA VOLTS / PHASE	ELECTRICAL DATA MOTOR POWER	ELECTRICAL DATA FAN POWER	
HVLS-SB-1	APPARATUS BAY	107	GREENHECK	DC-5-8-13LV	96 x 27	86	115V / 1	175W	68W	1-3
HVLS-SB-2,3	APPARATUS BAY	85	GREENHECK	DC-5-4-3LV	52 x 39	30	115V / 1	50W	6W	1-3

NOTES:
1. MANUFACTURER PROVIDED WALL MOUNTED CONTROLLER, FS1.
2. ELECTRICAL CONTRACTOR TO PROVIDE DISCONNECT SWITCH
3. PROVIDE SUPPLEMENTAL STEEL AS REQUIRED TO MOUNT FAN.

LOUVERS

EQUIPMENT NO.	LOCATION	SYSTEM SERVED	PERFORMANCE/CONSTRUCTION REQUIREMENTS MAX AIR FLOW RATE (CFM)	MAX. PD (IN. W.C.)	FREE AREA (SQ. FT.)	OVERALL NOMINAL SIZE W X H	SERVICE	BASIS OF DESIGN INFORMATION MNF	MODEL NO.	REMARKS
LV-SB-1	SEE PLAN	GXF-1	3000	0.02	4	48" X 24"	EXHAUST	GREENHECK	ESD-435	1-3
LV-SB-2	SEE PLAN	GXF-1	1000	0.02	2	24" X 12"	INTAKE	GREENHECK	ESD-435	1-3
LV-SB-3	SEE PLAN	GXF-1	1000	0.02	2	24" X 12"	INTAKE	GREENHECK	ESD-435	1-3
LV-SB-4	SEE PLAN	GXF-1	1000	0.02	2	24" X 12"	INTAKE	GREENHECK	ESD-435	1-3
LV-SB-5	SEE PLAN	VXF-1	TBD	0.02	4	48" X 24"	EXHAUST	GREENHECK	ESD-435	1-4

NOTES:
1. PROVIDE 12" SLEEVE
2. COORDINATE COLOR WITH ARCHITECT AND OWNER. PROVIDE COLOR SAMPLES
3. PROVIDE INTERNAL BIRD SCREEN
4. LOUVER FOR VEHICLE EXHAUST SHALL BE COORDINATED WITH VEHICLE EXHAUST CONTRACTOR. SIZE IS FOR REFERENCE ONLY.

GAS DETECTION SYSTEM

EQMT. NO.	LOCATION	SYSTEM SERVED	BASIS OF DESIGN INFORMATION MNF	MODEL NO.	NOMINAL DIMENSIONS L" x W" x H"	VOLTAGE / PHASE	REMARKS
GDS-SB-1	APPARATUS BAY	GXF-1	SIERRA MONITORING COMPANY	5100-04-IT	7.9"X5.7"X 3.9"	24	1 - 7

NOTES:
1. INCLUDE DIGITAL CONTROLLER IN NEMA 4 ENCLOSURE FOR WALL MOUNT.
2. LED DISPLAY FOR NO2 AND CO.
3. INCLUDE NITROGEN DIOXIDE SENSORS AND CARBON MONOXIDE SENSORS.
4. PROVIDE CONFIGURABLE ALARM OUTPUTS WITH ISOLATION RELAYS FOR INTERLOCK WITH FANS AND FACP.
5. PROVIDE PANEL MOUNTED AUDIBLE ALARM AND SILENCING SWITCH
6. PROVIDE ALARM HORN WITH STROBE.
7. PROVIDE STARTUP, TEST AND CALIBRATION REPORT

ELECTRIC UNIT HEATERS

EQUIPMENT NO.	LOCATION	CONFIGURATION	FAN DATA FLOW (CFM)	FAN DATA AMPS	FAN DATA VOLTS/ PHASE	TOTAL CAPACITY (MBH)	ELECTRIC COIL CAPACITY (W)	AIR DATA ENT. DB TEMP. (DEG. F)	AIR DATA LVG. DB TEMP. (DEG. F)	BASIS OF DESIGN INFORMATION MNF	MODEL NO.	NOMINAL DIMENSIONS L x W x H	REMARKS
WMH-SB-1	STORAGE AND BATHROOM	RECESSED CABINET	160	-	120	5.1	1500	55	108	STELPRO	AWF1501T	5 1/2" x 16 3/8" x 23 1/8"	1,2

NOTES:
1. MANUFACTURER TO PROVIDE UNIT MOUNTED THERMOSTAT.
2. ELECTRICAL CONTRACTOR TO PROVIDE UNIT MOUNTED DISCONNECT SWITCH.

H2M architects + engineers
538 Broad Hollow Road, 4th Floor East
Melville, NY 11747
631.756.8000 • www.h2m.com

CONSULTANTS:

MARK	DATE	DESCRIPTION

STATE OF NEW YORK · JOHN LAHEY · 101303 · LICENSED PROFESSIONAL ENGINEER

"ALTERATION OF THIS DOCUMENT EXCEPT BY A LICENSED PROFESSIONAL IS ILLEGAL"

DESIGNED BY:	DRAWN BY:	CHECKED BY:	REVIEWED BY:
MJV	MJV	MJV	JML

PROJECT No.:	DATE:	SCALE:
VGFD2001	JULY 2022	AS SHOWN

CLIENT
VAILS GATE FIRE DISTRICT

New Storage Building (Phase I)
New Fire Station (Phase II)

872 Blooming Grove Turnpike
New Windsor, NY 12553

CONTRACT
CONTRACT G
GENERAL CONSTRUCTION

STATUS
FINAL BID DOCUMENT

SHEET TITLE
MECHANICAL SCHEDULE SHEET

DRAWING No.
M1 610.00

X:\VGFD\Vails Gate Fire Dept\VGFD2001-(Vails Gate FD-New Firehouse)\02-BIM-CADD\Civil-dwg\Mech_Storage Building\M-610.dwg Last Modified: May 09, 2022 - 10:39am Plotted on: Jul 15, 2022 - 1:07pm By: dnagore