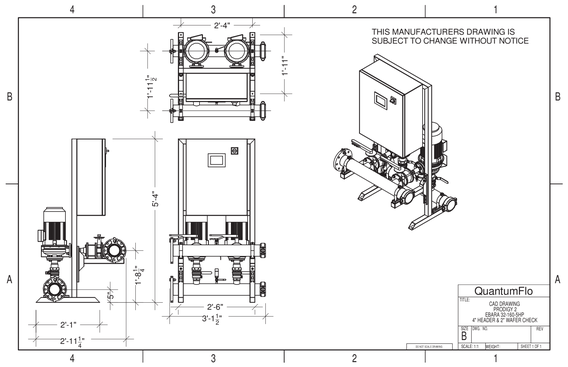

DOMESTIC WATER PRESSURE BOOSTER SYSTEM

TAG	LOCATION	QTY	GPM/PUMP	SYSTEM PRESSURE VALUES				MOTOR DATA AND VALUES			CONTROL PANEL				DESIGN BASIS MODEL	REMARKS
				TDH (FT)	SUCTION (PSI)	BOOST (PSI)	SET (PSI)	RPM	HP	KW/YR	VOLTAGE	PHASE	FULL LOAD	MAX SCCR		
BP-1	EG-103 & WG105	2	133	81.15	40	35.13	70.13	3450	5	11137.5	208	3	28.4	100KAIC	QUANTUMFLO-20783: PRODIGY DUPLEX QES_ 32-160B-5	SEE NOTE(S) BELOW

NOTES:
1. NET BOOST PRESSURE IS CALCULATED BY SYSTEM SET PRESSURE MINUS SUCTION PRESSURE LESS SYSTEM LOSSES OF 5 PSI
2. SYSTEMS SHALL BE PROVIDED WITH A CONTROL CERTIFICATE NUMBER FOR NSF61 CERTIFICATION.
3. ALL CONTROLS MUST COMPLY WITH AND PROVIDE FOR EITHER CONTROL LOGIC OR REMOTE SENSOR IN ACCORDANCE WITH ANSI/ASHRAE/IES STANDARD 90.1 ENERGY STANDARD
4. SUPPLIER SHALL PROVIDE A MINIMUM 1 YEAR COMPLETE PRODUCT WARRANTY CERTIFICATE WITH DETAILS IN SUBMITTALS
5. SYSTEM SHALL BE PRINTED TO STATE SPECIFIC CONTAINING ANY REQUIREMENTS
6. SYSTEM SHALL BE PROVIDED WITH SELF CONTAINED SHORT CIRCUIT RATING PER NEC, SECTION 409.110 HAVING A MAXIMUM 100K AVAILABLE FAULT CURRENT.
PROVIDE PARKING SYSTEM WITH ALL SUPPLY OR MAIN CONNECTIONS WITHIN THE ENCLOSURE WITHOUT THE NEED TO PROVIDE ADDITIONAL UPSTREAM PROTECTION.
8. SUPPLIER SHALL BE SUBMITTED TO WALES-DARBY, 716-807-1085, GKRAUSE@WALESDARBY.COM

1 P6.02 DOMESTIC WATER PRESSURE BOOSTER SYSTEM
1/2" = 1'-0"

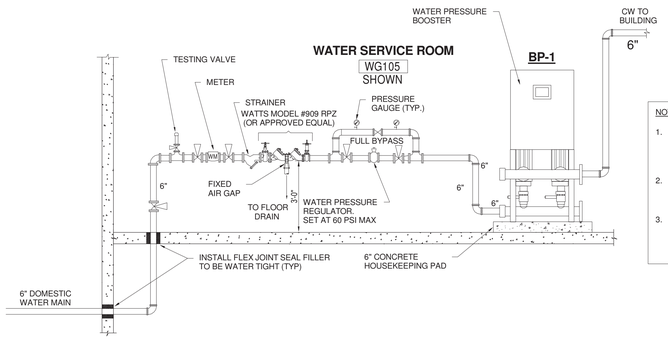

NOTES:
1. ALL PIPING SHALL BE COPPER TYPE "L" W/ SOLDERED FITTINGS (LEAD FREE TYPE). PROVIDE ALL REQUIRED DIELECTRIC FITTINGS FOR CONNECTIONS OF DISSIMILAR METALS.
2. PROVIDE 1/2" DIA. PIPE SUPPORTS FOR RPZ & HORIZONTAL PIPING. THE QUANTITY SHALL BE DETERMINED IN FIELD.
3. RPZ SHALL BE INSTALLED MIN. 8" FROM WALL. INSTALLATION SHALL CONFORM W/ LOCAL WATER COMPANY REGULATIONS & ALL CITY, COUNTY AND STATE HEALTH DEPARTMENT REQUIREMENTS.

2 P6.02 WATER METER / BACKFLOW PREVENTER / PRESSURE BOOSTER PIPING DETAIL
1/8" = 1'-0"

DRAIN TAGS

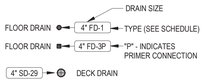

FLOOR DRAIN SCHEDULE

ID	DESCRIPTION	MANUFACTURER	MODEL	QTY	MATERIAL DESCRIPTION: DRAIN BODY	MATERIAL DESCRIPTION: STRAINER	PRIMER CONNECTION	WASTE PIPE SIZE	VENT PIPE SIZE	PRIMER PIPE SIZE	SPECIFICATION	REMARKS
FD-1	FLOOR DRAIN	WATTS	FD-100-A	15	EPOXY COATED CAST IRON	NICKEL BRONZE	No	2"	2"		EPOXY COATED CAST IRON FLOOR DRAIN WITH ANCHOR FLANGE, REVERSIBLE CLAMPING COLLAR WITH PRIMARY & SECONDARY WEEPHOLES, ADJUSTABLE ROUND HEEL PROOF NICKEL BRONZE STRAINER, AND NO HUB OUTLET. PROVIDE QUAD CLOSE TRAP SEAL	
FD-1	FLOOR DRAIN	WATTS	FD-100-A	24	EPOXY COATED CAST IRON	NICKEL BRONZE	Yes	2"	2"	1/2 in	EPOXY COATED CAST IRON FLOOR DRAIN WITH ANCHOR FLANGE, REVERSIBLE CLAMPING COLLAR WITH PRIMARY & SECONDARY WEEPHOLES, ADJUSTABLE ROUND HEEL PROOF NICKEL BRONZE STRAINER, AND NO HUB OUTLET. PROVIDE QUAD CLOSE TRAP SEAL	
SD-2	BALCONY DRAIN	MIFAB	R1100-PR	8	LACQUERED CAST IRON	DUCTILE IRON		3"			DECK DRAIN WITH ANCHOR FLANGE, CAST IRON WATERPROOFING MEMBRANE CLAMP RING, AND STANDARD 1" (25) THICK, 8" (203) SQUARE ADJUSTABLE TRACTOR GRATE WITH 3/8" (9) MAXIMUM WIDTH DRAINAGE SLOTS AND A FREE AREA OF 26 SQUARE INCHES	
SD-3	PARKING GARAGE DRAIN	J.R. SMITH	2455Y	22	EPOXY COATED CAST IRON	DUCTILE IRON		6"			TRAFFIC FLOOR DRAIN w/LARGE CAPACITY SEDIMENT BUCKET. 5000lb LOAD RATED DUCTILE IRON GRATE 13x11. Fabricated Steel Body with Galvanized Coating Inside and Outside and Cast Iron Grate and Stainless Steel Ported Bucket, with Mesh Screen and Lift Bar., AND NO HUB (STANDARD) OUTLET. PROVIDE QUAD CLOSE TRAP SEAL	

Grand total: 69

LEGEND

DCW	NEW DOMESTIC COLD WATER PIPING
DHW	NEW DOMESTIC HOT WATER PIPING
DHWR	NEW DOMESTIC HOT WATER RETURN PIPING
GAS	GAS LINE
	NEW BALL VALVE SHUTOFF
	NEW GAS SHUTOFF VALVE

DOMESTIC HOT WATER HEATER SCHEDULE

(A.O. SMITH AS STANDARD)

TAG No.	QUAN.	LOCATION	SERVICE	GAS INPUT (MBH)	RECOVERY RATE @ 100°F RISE (GPH)	STORAGE CAPACITY (GAL)	THERMAL EFFICIENCY %	FLUE SIZE	ELECTRIC DATA VOLT/PH/HZ	MODEL & MANUFACTURER	SIZE	REMARKS
DHWH-1 DHWH-2	16	MECH ROOM (EACH FLR)	DOMESTIC HW SYSTEM	120	276	60	98	3"□	115/1/60	BTH-120 Mxi A.O. SMITH	27.75□ x 55.5" H	SEE NOTE

NOTES:
1. PROVIDE TEMPERATURE & PRESSURE RELIEF VALVE, CONDENSATE DRAIN TEE. SEE PIPING DETAIL.
2. PROVIDE SIDEWALL INTAKE AIR TERMINATION 45° ELBOW WITH DOME SHAPED DEBRIS SCREEN.
3. PROVIDE VENT TERMINATION 45° ELBOW WITH RECESSED DEBRIS SCREEN. VENT SHALL RUN VERTICALLY TO LEVEL 4 CEILING ABOVE AND TURN HORIZONTAL TO EXIT HIGH THRU THE WALL.

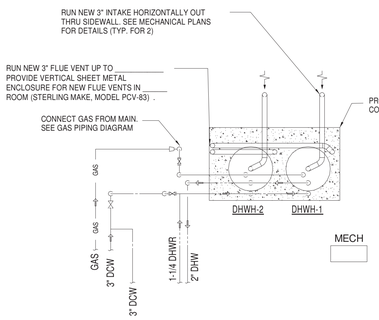

DOMESTIC HOT WATER SYSTEM PIPING PLAN

NOT TO SCALE

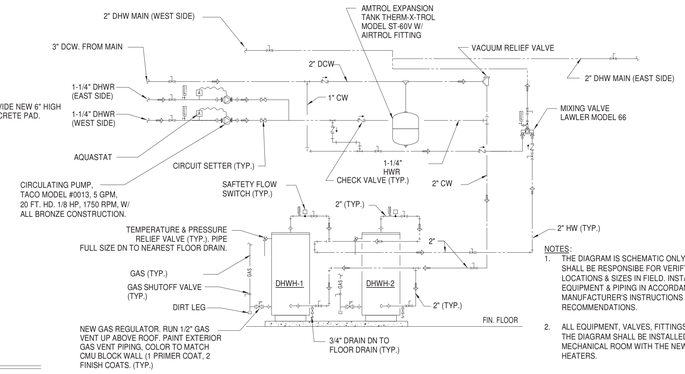

NOTES:
1. THE DIAGRAM IS SCHEMATIC ONLY. CONTRACTOR SHALL BE RESPONSIBE FOR VERIFYING ALL PIPING LOCATIONS & SIZES IN FIELD. INSTALL NEW EQUIPMENT & PIPING IN ACCORDANCE WITH THE MANUFACTURER'S INSTRUCTIONS & RECOMMENDATIONS.
2. ALL EQUIPMENT, VALVES, FITTINGS, ETC. SHOWN IN THE DIAGRAM SHALL BE INSTALLED IN THE MECHANICAL ROOM WITH THE NEW WATER HEATERS.

DOMESTIC HOT WATER SYSTEM PIPING DIAGRAM

NOT TO SCALE

3 P6.02 DOMESTIC HOT WATER PIPING PLANS AND DETAILS
1/4" = 1'-0"

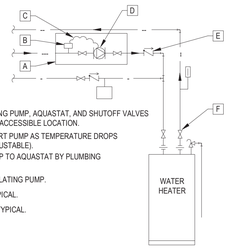

KEYNOTES:
- A MOUNT CIRCULATING PUMP, AQUASTAT, AND SHUTOFF VALVES BELOW CEILING IN ACCESSIBLE LOCATION.
- B AQUASTAT TO START PUMP AS TEMPERATURE DROPS BELOW 100 °F (ADJUSTABLE).
- C WIRING FROM PUMP TO AQUASTAT BY PLUMBING CONTRACTOR.
- D HOT WATER CIRCULATING PUMP.
- E CHECK VALVE. TYPICAL.
- F SHUTOFF VALVE. TYPICAL.

HOT WATER CIRCULATING PUMP PIPING DETAIL

N.T.S.

4 P6.02 HOT WATER CIRCULATING PUMP PIPING DETAIL
1/8" = 1'-0"

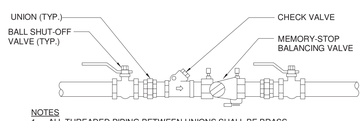

NOTES
1. ALL THREADED PIPING BETWEEN UNIONS SHALL BE BRASS.
2. INSTALL DI-ELECTRIC UNIONS FOR PIPING CONNECTIONS OF DISSIMILAR METALS.

5 P6.02 DHWR BALANCING ASSEMBLY DETAIL
1/8" = 1'-0"

ARCHITECT
HCM Design, Inc.
700 E. Pratt St, Suite 1200, Baltimore, MD 21202
p. 410. 837. 7311

STRUCTURAL ENGINEER
Morabito Consultants
952 Ridgebrook Road, suite 1700, Sparks MD 21152
p. 410.467.2377

FOOD SERVICE
Scopos Hospitality Group
300 West Chestnut Street, Suite 201, Ephrata, PA 17522
p. 717.733.5810

INTERIOR DESIGNER
Merlino Design Partnership, Inc.
2200 Renaissance Blvd, Suite 300, Gulph Mills, PA 19406
p. 610.313.9550

MEPFP ENGINEER
LAN Associates
Engineering, Planning, Architecture Surveying, LLP
252 Main Street, Goshen, NY 10924
p. 201.447.6400

HCM/LCS

BROADVIEW
SENIOR LIVING AT PURCHASE COLLEGE

BROADVIEW - SENIOR LIVING AT PURCHASE COLLEGE - IL BUILDINGS

hord | coplan | macht

ARCHITECTURE
LANDSCAPE ARCHITECTURE
PLANNING
INTERIOR DESIGN

STATE OF NEW YORK · THOMAS WIGHAM · 090385 · LICENSED PROFESSIONAL ENGINEER

LAN ASSOCIATES
Engineering, Planning, Architecture, Surveying, LLP
LAN JOB #1308.01
PROFESSIONAL CERTIFICATION: I CERTIFY THAT THESE DOCUMENTS WERE PREPARED OR APPROVED BY ME, AND THAT I AM A DULY LICENSED ENGINEER UNDER THE LAWS OF THE STATE OF NEW YORK.
LICENSE NUMBER: 090385
EXPIRATION DATE: 10/31/23

no.	date	revision

Project Name
BROADVIEW - SENIOR LIVING AT PURCHASE COLLEGE - IL BUILDINGS
Project Number
4.1308.01
Date
4/30/2021
Scale
As indicated
Drawing
PLUMBING DETAILS

P6.02

PERMIT / GMP SET

© Hord Coplan Macht, Inc.

4/26/2021 1:19:06 PM