PALLET RACK

PAGE 1 OF 7 **ASY 103**

ASSEMBLY INSTRUCTIONS

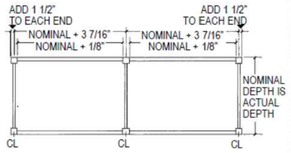

ALL CARTONS CONTAINING PALLET RACK PARTS ARE LABELED

OPEN 7 SEVENTH

PAGE 1-3 ....PARTS IDENTIFICATION
PAGE 3 .....SAFETY
PAGE 4-5 ....BASIC INSTALLATION
PAGE 6 .....LOAD CAPACITY
PAGE 7 .....ANCHORING TO FLOOR

NOTE! This publication is intended to be a generic installation instruction for Madix Pallet Rack, and may possibly be subject to change as required by local building codes ...consult the building inspection department at job site.

PARTS IDENTIFICATION

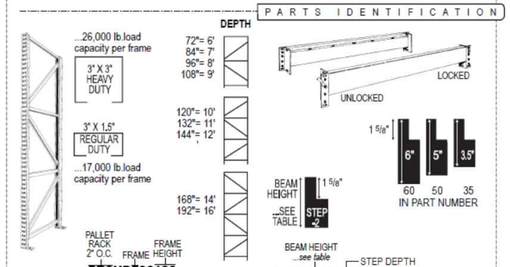

PALLET RACK

PAGE 2 OF 7 **ASY 103**

PARTS IDENTIFICATION

BEAM LENGTH		BEAM HEIGHT	CAPACITY IN LBS/PAIR	ACTUAL LENGTH BETWEEN BRACKETS
48"	x	3 1/2"	4,950	48 1/8"
48"	x	5"	7,600	48 1/8"
48"	x	6"	10,000	48 1/8"
60"	x	3 1/2"	4,950	60 1/8"
60"	x	5"	7,600	60 1/8"
60"	x	6"	10,000	60 1/8"
72"	x	3 1/2"	4,950	72 1/8"
72"	x	5"	7,600	72 1/8"
72"	x	6"	10,000	72 1/8"
84"	x	3 1/2"	4,950	84 1/8"
84"	x	5"	7,600	84 1/8"
84"	x	6"	10,000	84 1/8"
96"	x	3 1/2"	4,950	96 1/8"
96"	x	5"	7,600	96 1/8"
96"	x	6"	10,000	96 1/8"
108"	x	6"	9,110	108 1/8"
120"	x	6"	8,000	120 1/8"
132"	x	6"	7,270	132 1/8"
144"	x	6"	6,660	144 1/8"

DSRPO-□

PALLET RACK DECK SUPPORT — FRAME DEPTH

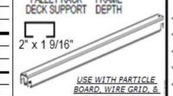

USE WITH PARTICLE BOARD, WIRE GRID, & FLOW THRU ONLY

Frame Depth	Actual Length
24"	20 7/16"
30"	26 7/16"
36"	32 7/16"
42"	38 7/16"
48"	44 7/16"

MPRDS-□

PALLET RACK DECK SUPPORT — FRAME DEPTH

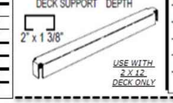

USE WITH 2 X 12 DECK ONLY

Frame Depth	Actual Length
24"	20 7/32"
30"	26 7/32"
36"	32 7/32"
42"	38 7/32"
48"	44 7/32"

PARTICLE BOARD DECK DIMENSIONS	NOMINAL	ACTUAL
LENGTH	24"	21"
	30"	27"
	36"	33"
	42"	39"
	48"	45"
DEPTH	48"	47 3/4"
	60"	59 3/4"
	72"	71 3/4"
	84"	83 3/4"
	96"	95 3/4"
	108"	53 7/8" x 2
	120"	59 7/8" x 2
	132"	65 7/8" x 2
	144"	71 7/8" x 2

Decks 108" and longer are two piece.

PALLETS ONLY one pair per pallet...no deck LOAD CAPACITY... 5,000 LBS/PAIR

PALLET RACK FLUSH DECK SUPPORT — FRAME DEPTH ...see table

MPRDSF36-2

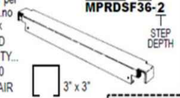

Frame Depth	Actual Length
24"	24 1/2"
30"	30 1/2"
36"	36 1/2"
42"	42 1/2"
48"	48 1/2"

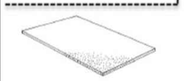

REGULAR DUTY PALLET RACK DECK — LENGTH ...see table

MPRRDD4296-U

DEPTH ...see table — U = UNSEALED, S = SEALED

PALLET RACK HEAVY DUTY DECKS ...dimensional 2 x 12

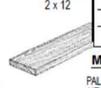

Frame Depth	Actual Length
24"	20 7/8"
30"	26 7/8"
36"	32 7/8"
42"	38 7/8"
48"	44 7/8"

MPRHHD-□□

PALLET RACK HEAVY DUTY DECK — FRAME DEPTH

PALLET RACK

PAGE 3 OF 7 **ASY 103**

PARTS IDENTIFICATION AND SAFETY

WIRE GRID ...USE WITH DSRPO-(ND)-1 ONLY

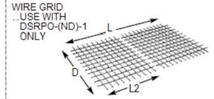

PALLET RACK — NOMINAL FRAME DEPTH — GRID SIZE ...3" o.c.

PRWMS□□□□-3

WIRE GRID DECK — NOMINAL PIECE LENGTH 24", 36", 48"

WATER FALL

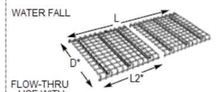

WATERFALL — NOMINAL FRAME DEPTH — GRID SIZE ...3" O.C.

PRWFWGD□□□□-3

PALLET RACK — WIRE GRID DECK — NOMINAL PIECE LENGTH 24", 36", 48"

FLOW-THRU ...USE WITH DSRPO-(ND)-1 ONLY

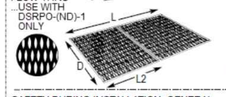

NOMINAL FRAME DEPTH

FTPR2D□□□□

PALLET RACK FLOW THROUGH DECK — NOMINAL PIECE LENGTH 24", 36", 42", 48"

DECK DIMENSIONS	NOMINAL	ACTUAL
DEPTH	24"	20 3/4"
	30"	26 3/4"
	36"	32 3/4"
	42"	38 3/4"
	48"	44 3/4"
PIECE LENGTH	24"	23 3/4"
	36"	35 3/4"
	48"	47 3/4"
	60"	59 3/4"

L = BEAM LENGTH
D = FRAME DEPTH
L2 = PIECE LENGTH

D* = ACTUAL FRAME DEPTH equals NOMINAL + 7/8"
L2* = ACTUAL PIECE LENGTH equals NOMINAL + 3 3/4"

SAFETY DURING INSTALLATION: GENERAL

1. Contact the local building department prior to starting installation to check on any restrictions.
2. Only parts and accessories produced or supplied by Madix are covered by Madix warranty.
3. Installation sequence must be followed exactly for assembly and leveling.
4. Under no circumstances should damaged parts be used.
5. Do not use shelving parts or accessories for any purpose other than originally intended.
6. Installation instructions with product load ratings. are included with each order and must be followed carefully.
7. Merchandisers must be made aware of possible overloading as specified in load ratings. If you do not receive these, please contact your sales or customer service representative.
8. Initial installation or relocation of Madix gondola, wall or racking fixtures should be supervised exclusively by qualified personnel.

RACKING...FRAMES/ BEAMS

1. Observe all prohibitions in the installation instructions on the use of powered lifts.
2. A minimum of four people are required to erect frames taller than 8'.
3. Be sure all beams or accessories are completely seated and locked or secured in frame slotting.

Height to Depth Ratio: Racks should not exceed 6 to 1 measuring to the top of top most load. If ratio exceeds 6 to 1 the constraint can be overcome with proper anchoring or external bracing of the rack structure.
CONSULT YOUR STRUCTURAL ENGINEER FOR SOLUTIONS.

4. Ladders, if used, should be at least frame height.
5. Never stand on lower beams to install upper beams.
6. Do not walk on decks, especially wire gnd.
7. Never try to move a completed racking run, especially if merchandised.
8. If installing frame extensions (PR2HDFR or PR2RDFE), Refer to ASY-80033038 for detailed instructions

DECK TYPE	NOMINAL BEAM LENGTH	...COMBINE THESE PIECE LENGTHS TO = BEAM LENGTH
SINGLE DECK	36"	36"
	48"	48"
TWO PIECE DECKS	60"	24" plus 36"
	72"	36" plus 36"
	84"	36" plus 48"
	96"	48" plus 48"
THREE PIECE DECKS	108"	36" plus 36" plus 36"
	120"	36" plus 48" plus 36"
	132"	48" plus 36" plus 48"
	144"	48" plus 48" plus 48"

• PIECE LENGTH RUNS PARALLEL TO BEAM LENGTH

PALLET RACK

PAGE 4 OF 7 **ASY 103**

ASSEMBLY INSTRUCTIONS

1. Snap chalklines on floor for rack layout.
2. Raise both frames for the beginning section to vertical, positioning the anchor plates of the first frame in the run...then install beam pairs as shown.
3. Two pairs of beams are required for frames to stand alone. The upper pair should be installed at a designated height. If necessary, the lower pair may be installed temporarily with sufficient clearance above the floor to allow for heavy duty drill operation for anchoring, and then moved to a designated height after anchoring is completed.
4. A. If using particle board deck, insert deck supports and deck on the designated beam pair to be sure section is square. See chart below for quantity of deck supports per beam length.

   B. If using any other decks, or no decks, square unit by equal diagonals as shown at left. Mark the anchor plate perimeters.

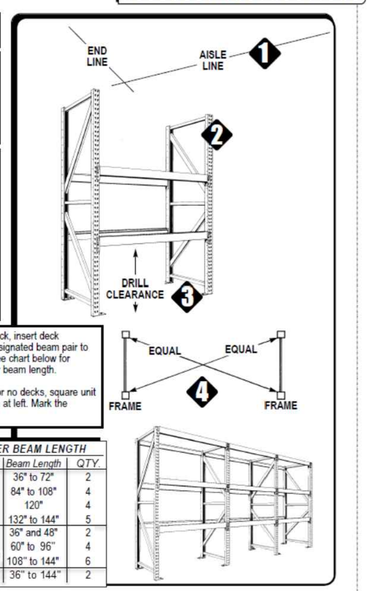

DECK SUPPORTS PER BEAM LENGTH			
Deck Support	Deck Type	Beam Length	QTY
DSRPO	PARTICLE BOARD	36" to 72"	2
		84" to 108"	4
		120"	4
		132" to 144"	5
	WIRE GRID, FLOW THRU	36" and 48"	2
		60" to 96"	4
		108" to 144"	6
MPRDS	2 X 12	36" to 144"	2

PALLET RACK

PAGE 5 OF 7 **ASY 103**

ASSEMBLY INSTRUCTIONS

5. When assured section is squared and properly aligned on chalkline, anchor the frames to floor. See last page for expansion bolts.
6. Continue adding frames and beams to end of run, positioning the anchor plates of the end frame into the run. Check run alignment to the chalkline then anchor frames to floor.
7. Add remaining beams, deck supports, and decks as required to complete run.
8. If adding back to back runs...secure all the back frames to the completed front run with back to back connectors as shown. Be sure connectors do not interfere with any designated beam positions. Use two connectors for all frames up to 96" high, or three connectors on all frames over 96" high.
9. Install two beam pairs in first section of back run and square section as in step 3. When assured section is squared and properly aligned , anchor the frames to floor.
10. Continue adding frames and beams to end of the back run. Check run alignment to the chalkline, then anchor frames to floor.
11. Add remaining beams, deck supports, and decks as required to complete the back run.

ASSEMBLY COMPLETE

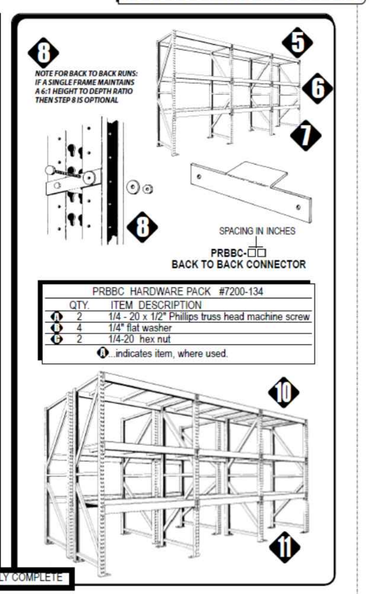

PRBBC HARDWARE PACK #7200-134		
	QTY.	ITEM DESCRIPTION
❶	2	1/4 - 20 x 1/2" Phillips truss head machine screw
❷	4	1/4" flat washer
❸	2	1/4-20 hex nut

❶ ...indicates item, where used.

PALLET RACK

PAGE 6 OF 7 **ASY 103**

LOAD CAPACITIES

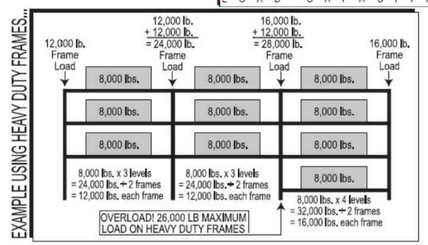

BEAM LENGTH		BEAM HEIGHT	CAPACITY IN LBS/PAIR
36"	x	3 1/2"	4,950
36"	x	5"	7,600
36"	x	6"	10,000
48"	x	3 1/2"	4,950
48"	x	5"	7,600
48"	x	6"	10,000
60"	x	3 1/2"	4,950
60"	x	5"	7,600
60"	x	6"	10,000
72"	x	3 1/2"	4,950
72"	x	5"	7,600
72"	x	6"	10,000
84"	x	3 1/2"	4,950
84"	x	5"	7,600
84"	x	6"	10,000
96"	x	3 1/2"	4,950
96"	x	5"	7,600
96"	x	6"	10,000
108"	x	6"	9,110
120"	x	6"	8,000
132"	x	6"	7,270
144"	x	6"	6,660

• Column loading is the vertical load, measured in pounds, that can be applied on any frame.

• Each frame bears ONE HALF OF THE LOAD OF EACH BEAM PAIR THAT IT SUPPORTS.

REGULAR DUTY FRAME, 3" x 1 1/2", HAS A 17,000 LB. LOAD CAPACITY.

HEAVY DUTY FRAME, 3" x 3", HAS A 26,000 LB. LOAD CAPACITY.

BEAM SPACING

• Spacing over 48" vertically reduces the column load capacity due to lack of support to channel.
• When the lowest beam is 48" or higher from the floor, always secure the frames to the floor.

VERTICAL IMPACT LOAD

Handling of pallets being placed on and removed from Pallet rack is responsible for most beam failures. Considering the magnitude of the forces involved, no beam can be designed and guarantee not to fail if a pallet is dropped onto the rack . How the lift truck is operated is the sole responsibility of the owner. The owner must make sure that his drivers are properly trained and responsible, and that no one else can operate the trucks at any time.

ALL LOAD CAPACITIES ARE BASED ON EVEN WEIGHT DISTRIBUTION!

DO NOT SCALE THESE DRAWINGS

ADA ARCHITECTS SERVICES, P.C.
17710 Detroit Avenue Lakewood, Ohio 44107
Phone (216) 521-5134 Fax (216) 521-4824
www.adaarchitects.cc

HARBOR FREIGHT TOOLS

314 NY ROUTE 59

NYACK, NY 10960

THESE DOCUMENTS CONTAIN INFORMATION PROPRIETARY TO ADA ARCHITECTS SERVICES, P.C. UNAUTHORIZED USE OF THESE DOCUMENTS IS EXPRESSLY PROHIBITED UNLESS AGREED UPON IN WRITING.

REVISIONS

#	DATE	TYPE
1		
2		
3		
4		
5		
6		
7		
8		
9		

FIXTURE SPECIFICATIONS AND DETAILS

DATE 9/22/21

JOB NO. 20420

A1.11

SHEET NO.