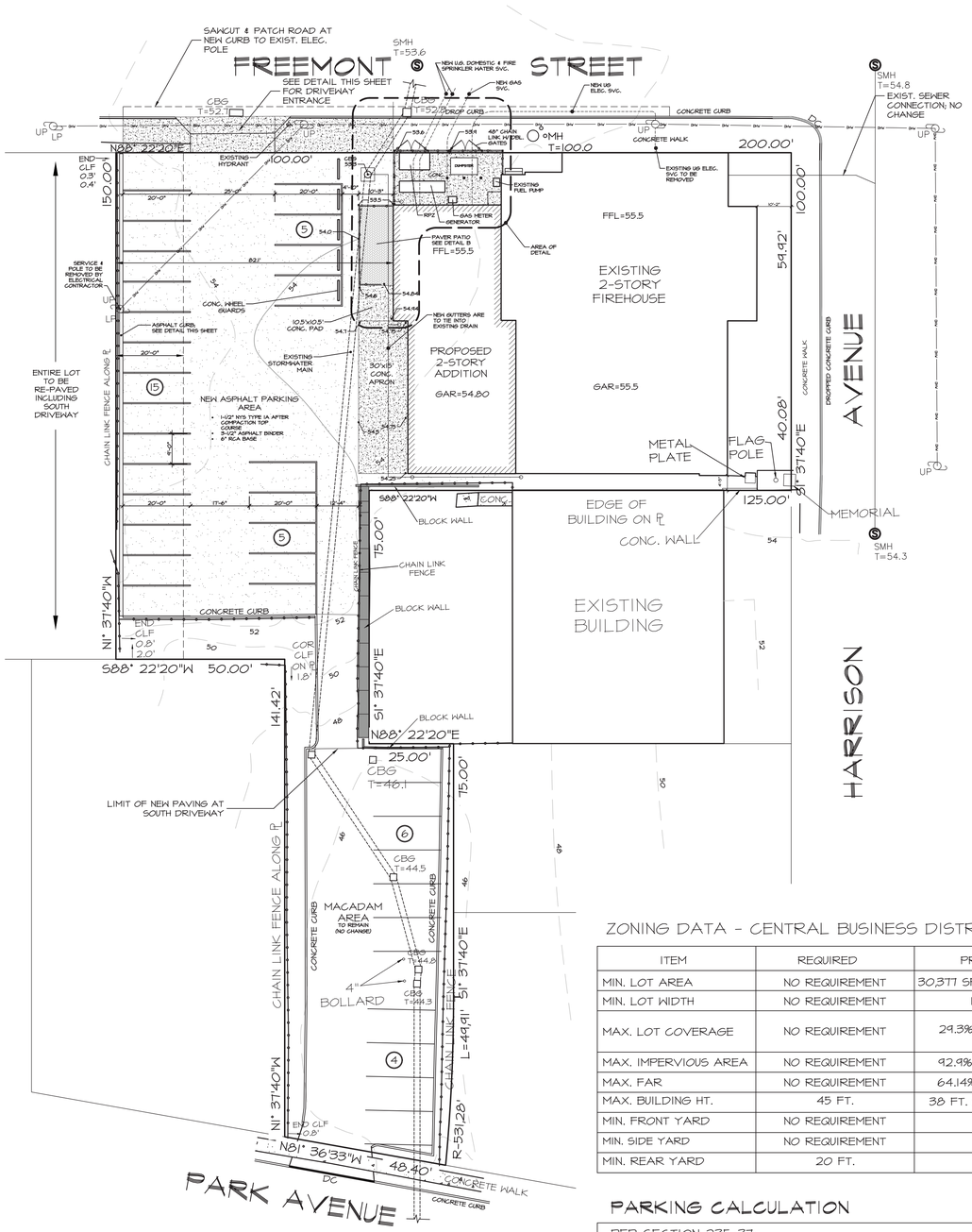

PROPOSED SITE PLAN

SCALE: 1" = 20'-0"

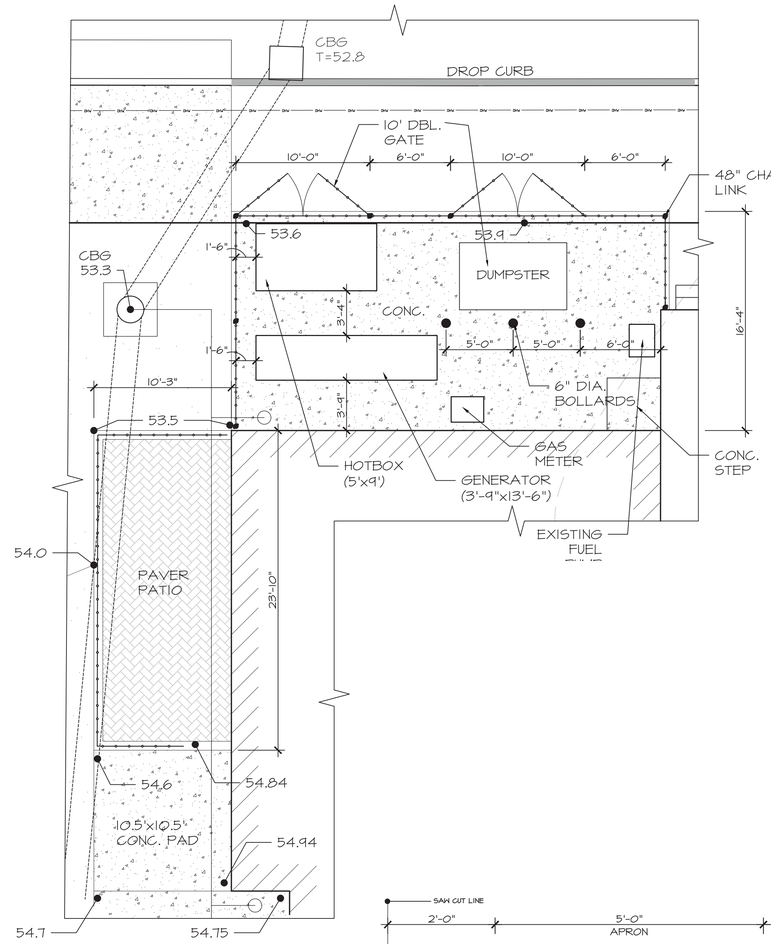

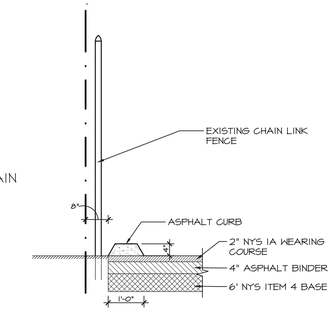

ASPHALT CURB PAVING DETAIL

SCALE: N.T.S.

ZONING DATA - CENTRAL BUSINESS DISTRICT (CBD)

ITEM	REQUIRED	PROVIDED
MIN. LOT AREA	NO REQUIREMENT	30,377 SF (0.697 ACRES)
MIN. LOT WIDTH	NO REQUIREMENT	100 FT.
MAX. LOT COVERAGE	NO REQUIREMENT	29.3% = 8,909.6 SF
MAX. IMPERVIOUS AREA	NO REQUIREMENT	92.9% = 28,247 SF
MAX. FAR	NO REQUIREMENT	64.14% = 19,484 SF
MAX. BUILDING HT.	45 FT.	38 FT. (EXCL. TOWER)
MIN. FRONT YARD	NO REQUIREMENT	0 FT.
MIN. SIDE YARD	NO REQUIREMENT	0 FT.
MIN. REAR YARD	20 FT.	82.1'

PARKING CALCULATION

PER SECTION 235-37:

OFFICE BUILDING/PROPRIETARY HEADQUARTERS
1 SPACE / 350 SQ. FT.

18,868 SQ. FT. FIREHOUSE* - 5,632 SF GARAGE = 13,852 SF
(*19,484 SF INCLUDING ELEVATOR AND BATHROOMS)

13,236 SF / 350 SQ. FT. = 37.8

PER SECTION 235-35, PART D:
DEDUCT 10 SPACES FROM TOTAL REQUIRED

37.8 - 10 = 27.8 SPACES REQUIRED

35 SPACES PROVIDED

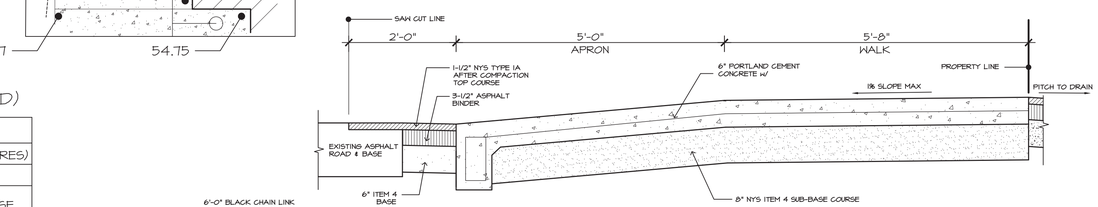

A NYS DOT DRIVEWAY SECTION

SCALE: 3/4" = 1'-0"

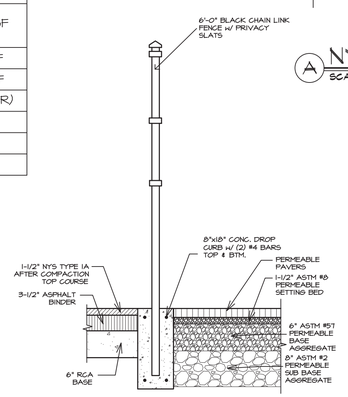

PAVER PATIO

SCALE: 3/4" = 1'-0"

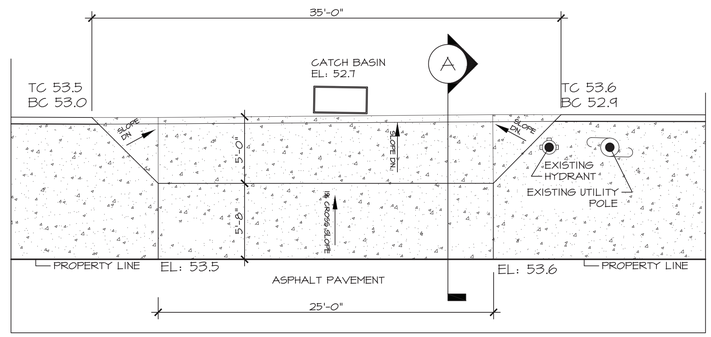

NYS DOT DRIVEWAY (TYPE 3)

SCALE: 3/16" = 1'-0"

DATE: ISSUE

02-25-2021 ISSUED FOR TOWN ENGINEERING REVIEW

03-12-2021 REVISED FOR TOWN PLANNING REVIEW

SEAL:

SENDLEWSKI ARCHITECTS PC
ARCHITECTS - PLANNERS
215 ROANOKE AVENUE
RIVERHEAD, NY 11901
(631) 727-5352
9 SELENA COURT
WALDEN, NY 12586
(845) 275-8859

HARRISON FIRE DEPT.
PROPOSED ADDITION
206 HARRISON AVE
HARRISON, NY 10528

PROPOSED SITE PLAN

PROJECT #: 2020-04

DRAWN BY: SEND. ARCH.

CAD FILE: P/2020/HFD 2020-04

DRAWING#:

SP-2