MECHANICAL INDEX SHEET

LINE DESIGNATIONS

CF	CHEMICAL FEED
D	DRAIN
E	EXPANSION
EXH	EXHAUST
G	NATURAL GAS
GHWS	GLYCOL HOT WATER SUPPLY
GHWR	GLYCOL HOT WATER RETURN
GV	GAS VENT
HWS	HOT WATER SUPPLY
HWR	HOT WATER RETURN
NPW	NON-POTABLE WATER
OF	OVERFLOW
RL	REFRIGERANT LIQUID
RS	REFRIGERANT SUCTION
RD	REFRIGERANT DISCHARGE
ST	STORM WATER
V	VENT PIPING

PIPING LINE SYMBOLS, ELEMENTS/VALVING

- EXISTING PIPING TO REMAIN
- EXISTING PIPING TO BE REMOVED
- NEW PIPING
- GATE VALVE
- GLOBE VALVE
- OR — BUTTERFLY VALVE
- BALL VALVE
- OS&Y GATE VALVE
- SWING CHECK VALVE
- TRIPLE DUTY VALVE
- GATE VALVE, ANGLE
- AUTO FLOW CONTROL VALVE
- CBV — CIRCUIT SETTING BALANCING VALVE
- THREE WAY CONTROL VALVE
- TWO WAY CONTROL VALVE
- VALVE-QUICK CLOSING
- RELIEF/SAFETY VALVE
- MV — MANUAL AIR VENT
- AV — AUTOMATIC AIR VENT (EXTEND DISCHARGE TO DRAIN)
- DIRECTION OF FLOW
- R D — DIRECTION OF PITCH-RISE / DROP
- STRAINER
- STRAINER WITH BLOW OFF VALVE
- PIPE RISING UP
- PIPE DROPPING DOWN
- TEE OUTLET UP
- TEE OUTLET DOWN
- CONCENTRIC REDUCER
- ECCENTRIC REDUCER
- UNION – SCREWED OR FLANGED
- A — ANCHOR
- G — GUIDE
- EJ — EXPANSION JOINT
- TI OR — THERMOMETER
- PI OR — GAUGE WITH GAUGE COCK & SYPHON (STEAM)
- AQUASTAT
- FLEXIBLE CONNECTION

NOTE: NOT ALL SYMBOLS, ABBREVIATIONS AND EQUIPMENT ABBREVIATIONS INDICATED APPEAR ON THESE CONTRACT DRAWINGS

ABBREVIATIONS

AAV	AUTOMATIC AIR VENT	GA	GAUGE	RL	REFRIGERANT LIQUID
ABV	ABOVE	GAL	GALLON	RLA	RATED LOAD AMPS
AD	ACCESS DOOR	GALV	GALVANIZED	RS	REFRIGERANT SUCTION
ADR	AREA DRAIN (SEE SYMBOLS)	GC	GENERAL CONTRACTOR	RM	ROOM
AFF	ABOVE FINISHED FLOOR	GPD	GALLONS PER DAY	RPM	REVOLUTIONS PER MINUTE
ALUM	ALUMINUM	GPH	GALLONS PER HOUR	–	–
AP	ACCESS PANEL	GPM	GALLONS PER MINUTE	SA	SUPPLY AIR
ATC	AUTOMATIC TEMPERATURE CONTROL	GR	GRILLE	SCH	SCHEDULE
AVER	AVERAGE	GRS/LB	GRAINS PER POUND	SCHEM	SCHEMATIC
AWT	AVERAGE WATER TEMPERATURE	–	–	SH	SENSIBLE HEAT
–	–	HT	HEIGHT	SIP	STERILIZE IN PLACE
BDD	BACK DRAFT DAMPER	H_2O	WATER	SP	STATIC PRESSURE
BFP	BACK FLOW PREVENTOR	HB	HOSE BIBB	SPEC	SPECIFICATION
BD	BLAST DAMPER	HD	HEAD (SEE SCHEDULES)	SQ	SQUARE
BLDG	BUILDING	HP	HORSEPOWER	SS	STAINLESS STEEL
BLW	BELOW	HR	HOUR	SST	SUPPORT STEEL
BM	BELL MOUTH	HTR	HEATER	STD	STANDARD
BSMT	BASEMENT	HZ	HERTZ	STL	STEEL
BTU	BRITISH THERMAL UNIT	–	–	STM	STEAM
–	–	ID	INSIDE DIMENSION	STR	STRUCTURAL
CAP	CAPACITY	IN	INCHES	SUCT	SUCTION
CBV	CIRCUIT BALANCING VALVE	INCL	INCLUDING	SUP	SUPPLY
CF	INLINE EXHAUST FAN	INT	INTERNAL	SYS	SYSTEM
CFH	CUBIC FEET PER HOUR	INV	INVERT	–	–
CFM	CUBIC FEET PER MINUTE	–	–	TAD	TRANSFER AIR DUCT
CHP	CONCRETE HOUSEKEEPING PAD	KW	KILOWATT	TDH	TOTAL DYNAMIC HEAD
CI	CAST IRON	–	–	TEMP	TEMPERATURE
CIP	CLEAN IN PLACE	L	LENGTH	TOT	TOTAL
℄	CENTER LINE	LAT	LEAVING AIR TEMPERATURE	THT	TOTAL HEAT
CLG	CEILING	LB	POUND	TP	TOTAL PRESSURE
CO	CLEAN OUT	LBS/HR	POUNDS PER HOUR (#/HR)	TS	TEMPERATURE SWITCH
COL	COLUMN	LD	LINEAR DIFFUSER	TSP	TOTAL STATIC PRESSURE
COMP	COMPRESSOR	LIN	LINEAR	TT	TEMPERATURE TRANSMITTER
CON	CONCENTRIC	LIQ	LIQUID	TYP	TYPICAL
CONC	CONCRETE	LRA	LOCK ROTOR AMPS	–	–
COND	CONDENSATE	LVG	LEAVING	UC	UNDERCUT
CONN	CONNECTION	LVR	LOUVER	UNOCC	UNOCCUPIED
CONT'N	CONTINUATION	LWT	LEAVING WATER TEMPERATURE	–	–
CONTR	CONTRACTOR	–	–	V	VOLTS
CVS	CONTROL VALVE STATION	MC	MECHANICAL CONTRACTOR	VA	VALVE
–	–	MBH	THOUSANDS OF BTU PER HOUR	VB	VACUUM BREAKER
DA	DIRECT ACTING	MED	MEDIUM	VD	VOLUME DAMPER
DAMP	DAMPER	MFR	MANUFACTURER	VEL	VELOCITY
DB	DRY BULB	MH	MANHOLE	VI	VIBRATION ISOLATOR
DEPT	DEPARTMENT	MIN	MINIMUM	VOLT	VOLTAGE
DIA	DIAMETER	MISC	MISCELLANEOUS	VTR	VENT THRU ROOF
DIAG	DIAGRAM	MTD	MOUNTED	–	–
DIFF	DIFFERENTIAL	MVD	MANUAL VOLUME DAMPER	W	WIDTH
DISCH	DISCHARGE	–	–	W/	WITH
DIV	DIVISION	NC	NORMALLY CLOSED	W/O	WITHOUT
DIW	DOWN IN WALL	NEG	NEGATIVE	WB	WET BULB
DL	DOOR LOUVER	NIC	NOT IN CONTRACT	WC	WATER COLUMN
DN	DOWN	No	NUMBER	WG	WATER GAUGE
DWG	DRAWING	NO	NORMALLY OPEN	WT	WEIGHT
DX	DIRECT EXPANSION	NOM	NOMINAL		
–	–	NTS	NOT TO SCALE		
E	EXISTING	–	–		
EA	EACH	OA	OUTSIDE AIR		
EAT	ENTERING AIR TEMPERATURE	OB	OFF BOTTOM		
EC	ELECTRICAL CONTRACTOR	OD	OUTSIDE DIMENSION		
ECC	ECCENTRIC	OC	ON CENTER		
ECG	EGGCRATE GRILLE	OCC	OCCUPIED		
ECC	ENCLOSURE END CAP	OGH	OUTSIDE GROUND HYDRANT		
EFF	EFFICIENCY	OPG	OPENING		
EJ	EXPANSION JOINT	OS	OPEN SITE		
EL	ELEVATION	OT	OFF TOP		
ELEC	ELECTRIC	OV	OUTLET VELOCITY		
ELEV	ELEVATOR	OZ	OUNCE		
ENT	ENTERING	–	–		
EQ	EQUAL	PART	PARTIAL		
EQUIP	EQUIPMENT	PD	PRESSURE DROP (SEE SCHEDULE)		
ES	END SWITCH	PERF	PERFORATED		
ESP	EXTERNAL STATIC PRESSURE	PEX	CROSS-LINKED POLYETHYLENE		
ETC	AND SO FORTH	PH	PHASE		
EWT	ENTERING WATER TEMPERATURE	PG	PROPYLENE GLYCOL		
EXH	EXHAUST	PNEU	PNEUMATIC		
EXPAN	EXPANSION	POS	POSITIVE		
EXT	EXTERNAL	PPH	POUNDS PER HOUR		
–	–	PRESS	PRESSURE		
°F	DEGREES FAHRENHEIT	PS	PRESSURE SWITCH		
FA	FROM ABOVE	PSI	POUNDS PER SQUARE INCH GAUGE		
FB	FROM BELOW	PSIG	POUNDS PER SQUARE INCH GAUGE		
FC	FAIL CLOSED	PSIA	POUNDS PER SQUARE INCH ABSOLUTE		
FCV	FLOW CONTROL VALVE	PT	PRESSURE TRANSMITTER		
FD	FLOOR DRAIN	PV	PLUG VALVE		
F/D	FIRE DAMPER	PVC	POLYVINYL CHLORIDE		
FG	FILTER GRILLE	PVS	POLYVINYL COATED STEEL		
FIN	FINISHED	–	–		
FL	FLANGE	QUAN	QUANTITY		
FLA	FULL LOAD AMPS	–	–		
FLEX	FLEXIBLE	R	REGISTER		
FLR	FLOOR	RA	RETURN AIR		
FO	FAIL OPEN	RAC	RUN ABOVE CEILING		
FOB	FLAT ON BOTTOM	RAF	RUN ABOVE FLOOR		
FOT	FLAT ON TOP	RATC	RUN AT CEILING		
FP	FIRE PROTECTION	RBC	RUN BELOW CEILING		
FPH	FEET PER HOUR	RBF	RUN BELOW FLOOR		
FPM	FEET PER MINUTE	RBG	RUN BELOW GRADE		
FPS	FEET PER SECOND	RBJ	RUN BETWEEN JOIST		
FRICT	FRICTION	RCP	REINFORCED CONCRETE PIPE		
FS	FLOW SWITCH	RD	ROOF DRAIN		
F/S/D	COMBINATION FIRE AND SMOKE WITH ACCESS DOOR	RE	ROUNDED ENTRANCE/EXIT		
		REL	RELIEF		
FT	FEET	REQD	REQUIRED		
FTB	FLOOR TO BOTTOM	RET	RETURN		
FTR	FINNED TUBE RADIATION	RH	RELATIVE HUMIDITY		
FV	FACE VELOCITY	RICW	RUN IN CASEWORK		
FXC	FLEXIBLE CONNECTION	RIE	RUN IN ENCLOSURE		

EQUIPMENT ABBREVIATIONS

- EQUIPMENT (SEE SCHEDULE)
- EQUIPMENT IDENTITY ABBREVIATION
- X
- X–X
- EQUIPMENT NUMBER
- SYSTEM NUMBER

		IRH	INFRARED HEATER
AB	AIR BLENDER	–	–
AC	AIR CONDITIONING UNIT	LFM	LAMINAR FLOW MODULE
ACC	AIR COOLED CONDENSER	–	–
AHU	AIR HANDLING UNIT	MB	MIXING BOX
AM	AIR MEASURING DEVICE	–	–
AS	AIR SEPERATOR	P–BF	PUMP – BOILER FEED
–	–	P–C	PUMP – CONDENSER WATER
B	BOILER	P–CF	PUMP – CHEMICAL FEED
BFS	BOILER FEED SET	P–CH	PUMP – CHILLED WATER
BIBO	BAG IN/BAG OUT FILTER	P–CO	PUMP – CONDENSATE
–	–	P–DC	PUMP – DRY COOLER
CC	COOLING COIL	P–ER	PUMP – ENERGY RECLAIM
CF	CHEMICAL FEED UNIT	P–FO	PUMP – FUEL OIL
CT	COOLING TOWER	P–H	PUMP – HOT WATER
CTF	COOLING TOWER FILTER	P–S	PUMP – SPARE
CU	CONDENSING UNIT	P–TR	PUMP – TRANSFER
CUH	CABINET UNIT HEATER	PH	PREHEAT COIL
CV	AUTOMATIC CONTROL VALVE	PHE	PENTHOUSE
D	AUTOMATIC DAMPER	PRV	PRESSURE REDUCING VALVE
DA	DEAERATOR	PS	PRESSURE SWITCH
DC	DUST COLLECTOR	–	–
DCR	DRY COOLER	R	REFRIGERATION UNIT
DH	DOOR HEATER	RAD	RETURN AIR DEVICE
DHU	DEHUMIDIFICATION UNIT	RAF	RETURN AIR FAN
–	–	RAH	RADIANT HEATER
(E)	EXISTING	RD	RUPTURE DISC
EAD	EXHAUST AIR DEVICE	RF	RELIEF AIR FAN
EBR	ELECTRIC BASEBOARD RADIATION	RH	REHEAT COIL
EDH	ELECTRIC DUCT HEATER	RV	RELIEF VALVE
EF	EXHAUST FAN	RCF	RECIRCULATION AIR FAN
ERC	ENERGY RECLAIM COIL	–	–
ET	EXPANSION TANK	SAD	SUPPLY AIR DEVICE
EUH	ELECTRIC UNIT HEATER	SF	SUPPLY FAN
–	–	SRV	SAFETY RELIEF VALVE
F	FILTER	ST	STORAGE TANK
FC	FAN COIL UNIT	STP	SOUND TRAP
FM	FLOW METER	–	–
FT	FLASH TANK	TAD	TRANSFER AIR DEVICE
–	–	TAF	TERMINAL AIR FILTER
GFU	GLYCOL FEED UNIT	TF	TRANSFER FAN
–	–	TU	TERMINAL UNIT
H	HUMIDIFIER	TUE	TERMINAL UNIT – EXHAUST
HC	HEATING COIL	TUR	TERMINAL UNIT – RETURN
HE	HEAT EXCHANGER	TUS	TERMINAL UNIT – SUPPLY
HP	HEAT PUMP	–	–
HR	HEAT RECOVERY UNIT	UH	UNIT HEATER
HTP	HEAT TRANSFER PACKAGE	–	–
HWC	HOT WATER CONVERTOR	WF	WATER FILTER
		WS	WATER SOFTENER

REFERENCE SYMBOLS

- EQUIPMENT IDENTITY (SEE EQUIPMENT ABBREVIATION LIST AND SCHEDULES)
- EQUIPMENT NUMBER
- SYSTEM NUMBER (IF APPLICABLE)
- INDICATES DETAIL LETTER (APPLIES ONLY WHERE INDICATED ON DRAWINGS)
- INDICATES DRAWING ON WHICH DETAIL APPEARS
- INDICATES SECTION NUMBER
- INDICATES ON WHICH DRAWING SECTION APPEARS
- X — INDICATES REVISION & NUMBER
- CONNECT NEW TO EXISTING
- TERMINATION POINT OF DEMOLITION
- CONNECT TO MANUFACTURER'S PREPIPED CONNECTION
- X — SHEET NOTE NUMBER (SN)
- T — THERMOSTAT
- XXXX XXXX — TO/FROM DWG

GENERAL NOTES

1. ALL WORK SHALL BE PERFORMED IN A CLEAN AND WORKMANLIKE MANNER. CARE SHALL BE EXERCISED TO MINIMIZE ANY INCONVENIENCE OR DISTURBANCE TO OTHER AREAS OF THE BUILDING WHICH ARE TO REMAIN IN OPERATION. ISOLATE WORK AREAS BY MEANS OF TEMPORARY PARTITIONS AND/OR TARPS TO KEEP DUST AND DIRT WITHIN THE CONSTRUCTION AREA.
2. NO PIPING, EQUIPMENT, ETC. SHALL BE REMOVED, DISCONNECTED OR SHUT DOWN WITHOUT PRIOR REVIEW WITH THE OWNER AND/OR ENGINEER TO CONFIRM THAT AREAS TO REMAIN IN OPERATION WILL NOT BE AFFECTED. IF ANY AREAS NOT WITHIN THE SCOPE OF WORK ARE AFFECTED BY ANY SHUTDOWN, REMOVAL OR DISCONNECTION, SUFFICIENT ADVANCE NOTICE MUST BE GIVEN TO THE OWNER INDICATING WHICH AREAS WILL BE AFFECTED, WHEN THE PROPOSED SHUTDOWN WILL OCCUR, AND FOR HOW LONG A PERIOD OF TIME.
3. ALL ITEMS REMOVED SHALL BECOME PROPERTY OF THE OWNER AND SHALL BE DISPOSED OF AS PER THE OWNER'S INSTRUCTIONS, UNLESS INDICATED OTHERWISE. ALL ITEMS WHICH ARE NOT TO BE STORED ON SITE BY OWNERS SHALL BE REMOVED FROM THE BUILDING IMMEDIATELY.
4. CONTRACTOR SHALL FIELD VERIFY ALL DIMENSIONS AND EXISTING CONDITIONS PRIOR TO PROCEEDING WITH ANY WORK. WHERE DISCREPANCIES OCCUR BETWEEN THESE DOCUMENTS AND EXISTING CONDITIONS, THE DISCREPANCY SHALL BE REPORTED TO THE OWNER AND/OR ENGINEER FOR EXPEDITING AND RESOLVE.
5. CLEAN THE JOB SITE DAILY AND REMOVE FROM THE PREMISES ANY DIRT AND DEBRIS CAUSED BY THE PERFORMANCE OF THE WORK INCLUDED IN THIS CONTRACT.
6. THE CONTRACTOR SHALL BE RESPONSIBLE FOR THE SAFEKEEPING OF HIS OWN PROPERTY ON THE JOB SITE. OWNER ASSUMES NO RESPONSIBILITY FOR PROTECTION OF PROPERTIES AGAINST FIRE, THEFT AND ENVIRONMENTAL CONDITIONS
7. SUCCESSFULLY PRESSURE TEST ALL PIPING SYSTEMS. TEST SHALL BE PERFORMED AT NORMAL SYSTEM OPERATING PRESSURES. REPAIR AND RETEST AS REQUIRED UNTIL SYSTEMS PROVE TIGHT.
8. PROVIDE ALL NECESSARY TEMPORARY OR PERMANENT CAPS OR PLUGS FOR PIPING. DO NOT LEAVE PIPING OPEN ENDED.
9. WHERE USED, THE TERM "PROVIDE" SHALL MEAN "FURNISH AND INSTALL"
10. CONTRACTOR SHALL COORDINATE HIS WORK WITH ALL OTHER TRADES PRIOR TO FABRICATION, PURCHASE AND/OR INSTALLATION OF ALL WORK.
11. IF CONTRACTOR ENCOUNTERS WHAT APPEARS TO BE A HAZARDOUS OR QUESTIONABLE MATERIAL, HE SHALL DISCONTINUE WORK IMMEDIATELY AND CONTACT THE OWNERS REPRESENTATIVE.
12. IF A DISCREPANCY ARISES BETWEEN THE DRAWINGS AND THE SPECIFICATIONS, CONTACT THE ARCHITECT/ENGINEER FOR RESOLUTION BEFORE PROCEEDING.
13. IN EVENT THAT ANY ASBESTOS IS FOUND ON THE JOB SITE, REMOVAL SHALL TAKE PLACE IN ACCORDANCE WITH ALL APPLICABLE CODES, OSHA REGULATION 1901.1, INCLUDING STATE AND FEDERAL DUMPING GROUNDS.
14. THE WORK SHALL BE PROVIDED IN ACCORDANCE WITH THE REQUIREMENTS OF THE 2018 INTERNATIONAL MECHANICAL CODE AND THE 2018 INTERNATIONAL ENERGY CONSERVATION CODE.

100% RFC SUBMISSION

DESIGNED	EJD
DRAWN	EJD
CHECKED	AVB
APPROVED	AVB

STATE OF NEW YORK · ANTHONY V. BAYER · No. 060529-1 · LICENSED PROFESSIONAL ENGINEER

NO.	DATE		DRWN	CHKD	APPVD

REVISION

CONFORMED

NO.	DATE		DRWN	CHKD	APPVD

REVISION

STV 100 Years
225 PARK AVENUE SOUTH, NEW YORK, NY 10003

MTA Metro-North Railroad
420 Lexington Avenue
New York, NY 10017

TITLE: HARTSDALE AND SCARSDALE STATION IMPROVEMENTS
SYMBOLS LEGEND ABBREVIATIONS & GENERAL NOTES
SCARSDALE STATION

CONTRACT NO. 1000106733
SCALE
DATE 08/03/2021
DRAWING NO. SCD-M-001
SHEET 100 OF 112

HEAT PUMP, AIR-COOLED, SPLIT-SYSTEM, DX UNIT COMPRESSOR/CONDENSER SCHEDULE

TAG. NO.	LOCATION	BASIS OF DESIGN MANUFACTURER	SYSTEM SERVED	CONDENSER FAN CFM	COOLING CAP. (BTUH)	COOLING EFFICIENCY EER	HEATING COP @ 47°F	CONDENSING O.A. TEMP. (°F DB)		COMPRESSOR MOTOR		COMPRESSOR TYPE	FAN MOTORS WATTS	MODEL No.	UNIT ELECTRICAL POWER (V/PH/HZ)	UNIT FLA (AMPS)	UNIT MCA (AMPS)	UNIT MFA (AMPS)	REFRIG. TYPE	UNIT OVERALL DIMENSIONS (IN.) (LxWxH)	REMARKS
								COOLING	HEATING	QTY.	RLA										
ACC-1	ON GRADE	MITSUBISHI	AC-1	3,880	36,000	10.8	4.52	115	0	1	8	INVERTER DRIVEN SCROLL, HERMETIC	(2) 74	PUZ-A36NKA7	208/1/60	13	25	31	R410A	18x42x53	SEE NOTES
ACC-2	ON GRADE	MITSUBISHI	AC-2	3,880	36,000	10.8	4.52	115	0	1	8	INVERTER DRIVEN SCROLL, HERMETIC	(2) 74	PUZ-A36NKA7	208/1/60	13	25	31	R410A	18x42x53	SEE NOTES

NOTES:
1. UNIT MOUNTED ON CONCRETE PAD.
2. INDOOR UNIT POWERD FROM OUTDOOR.
3. PROVIDE WITH WIND BAFFLE FOR LOW-AMBIENT OPERATION CAPABILITY DOWN TO AT LEAST ZERO °F.
4. THE CONTRACTOR SHALL CONFIRM THE CORRECT SIZES OF THE RL AND RS REFRIGERANT PIPING OF EACH AC/ACC UNIT SYSTEM WITH THE APPROVED EQUIPMENT MANUFACTURER.

HEAT PUMP, AIR-COOLED, SPLIT-SYSTEM, DX UNIT EVAPORATOR SCHEDULE

TAG. NO.	ASSOCIATED ACC UNIT	LOCATION	BASIS OF DESIGN MANUFACTURER	HIGH SPEED SUPPLY CFM	GROSS COOLING CAPACITY (BTUH)	SENSIBLE COOLING CAPACITY (BTUH)	FAN MOTOR W	UNIT ELECTRICAL POWER		MODEL No.	MOUNTING ARRANGEMENT	REMARKS
								VOLT/PH/HZ	FLA (AMPS)			
AC-1	ACC-1	EMR	MITSUBISHI	810	36000	25000	56	208/1/60	.57	PKA-36KA7	WALL MOUNTED	-
AC-2	ACC-1	EMR	MITSUBISHI	810	36000	25000	56	208/1/60	.57	PKA-36KA7	WALL MOUNTED	-

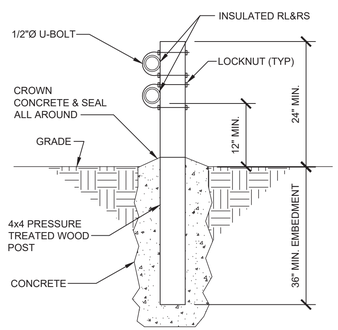

EXTERIOR REFRIGERANT PIPE SUPPORT DETAIL

NO SCALE

100% RFC SUBMISSION

DESIGNED	EJD
DRAWN	EJD
CHECKED	AVB
APPROVED	AVB

STATE OF NEW YORK · ANTHONY V. BAYER · No. 060529-1 · LICENSED PROFESSIONAL ENGINEER

NO.	DATE		DRWN	CHKD	APPVD

REVISION

NO.	DATE	CONFORMED	DRWN	CHKD	APPVD

REVISION

STV 100 Years
225 PARK AVENUE SOUTH,
NEW YORK, NY 10003

MTA Metro-North Railroad
420 Lexington Avenue
New York, NY 10017

TITLE
HARTSDALE AND SCARSDALE STATION IMPROVEMENTS

DETAILS & SCHEDULES

SCARSDALE STATION

CONTRACT NO. 1000106733
SCALE
DATE 08/03/2021
DRAWING NO. SCD-M-002
SHEET 101 OF 112

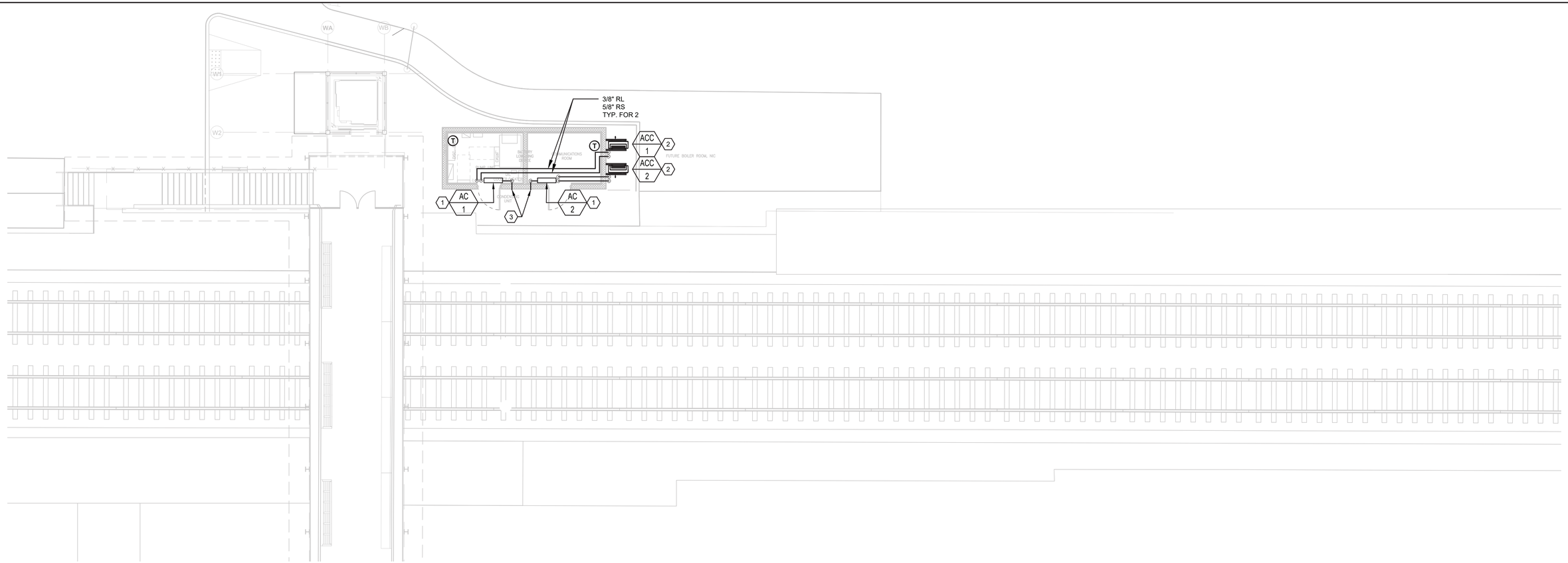

KEY NOTES:

1. PROVIDE WALL MOUNTED AC UNITS ABOVE DOORWAY. UNITS SHALL BE PROVIDED WITH DEDICATED, FACTORY FURNISHED, THERMOSTAT CONTROLLER AS SPECIFIED WITH AUTOMATIC CHANGEOVER BETWEEN HEATING AND COOLING MODES.
2. PROVIDE ACC UNITS ON FIELD FABRICATED, WALL MOUNTED, STRUCTURAL SUPPORTS. BOTTOM OF ACC UNITS SHALL BE 3' ABOVE GRADE. FIELD ROUTE REFRIGERANT LINES TO ASSOCIATED INDOOR AC UNITS. SEE SPECIFICATION SECTION 230719 FOR INSULATION AND JACKETING ON BOTH RL & RS PIPING.
3. FIELD ROUTE CONDENSATE DRAIN LINE TO 1" AFF AND PENETRATE FACADE. SPILL CONDENSATE ON GRADE AND PROVIDE SLEEVE AND SEAL AT PENETRATION.

1 MECHANICAL PLATFORM PART PLAN

1/8"=1'-0"

0 4' 8' 16'

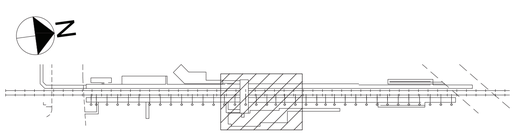

100% RFC SUBMISSION

DESIGNED	EJD
DRAWN	EJD
CHECKED	AVB
APPROVED	AVB

STATE OF NEW YORK · ANTHONY V. BAER · LICENSED PROFESSIONAL ENGINEER · No. 060529-1

NO.	DATE		DRWN	CHKD	APPVD

REVISION

NO.	DATE	CONFORMED	DRWN	CHKD	APPVD

REVISION

STV 100 Years
225 PARK AVENUE SOUTH,
NEW YORK, NY 10003

MTA Metro-North Railroad
420 Lexington Avenue
New York, NY 10017

TITLE
HARTSDALE AND SCARSDALE STATION IMPROVEMENTS
MECHANICAL PLATFORM PART PLAN
SCARSDALE STATION

CONTRACT NO. 1000106733
SCALE
DATE 08/03/2021
DRAWING NO. SCD-M-101
SHEET 102 OF 112

GENERAL NOTES

1. THE WORK INCLUDES PROVIDING ALL LABOR, EQUIPMENT, MATERIALS AND NECESSARY SERVICES TO PROVIDE A COMPLETE NEW ADDRESSABLE FIRE ALARM SYSTEM AT MNR SCARSDALE STATION AS INDICATED ON THE DRAWINGS AND SPECIFICATIONS

2. ALL WORK SHALL COMPLY WITH NFPA 72-2013, THE INTERNATIONAL BUILDING CODE 2015 WITH 2016 SUPPLEMENTS, NFPA 70-2014 (AS APPLIED TO CABLE APPROVALS ONLY).

3. LOCATIONS OF CONDUITS AND DEVICES
   A. THE CONTRACTOR SHALL VISIT THE SITE AND VERIFY THE EXISTING CONDITIONS AS SHOWN ON THE CONTRACT DRAWINGS BEFORE SUBMITTING THE BID TO ENSURE THAT CONDITIONS AT THE TIME OF BID ARE ACCOUNTED FOR.
   B. THE CONTRACTOR SHALL SUBMIT THE CONDUIT LAYOUT FOR APPROVAL BEFORE COMMENCEMENT OF INSTALLATION WORK.
   C. THE CONTRACTOR SHALL SUBMIT CONDUITS AND DEVICES INSTALLATION DETAILS BEFORE COMMENCEMENT OF WORK.

4. CONDUIT MOUNTING
   A. THE CONTRACTOR SHALL CONDUCT SITE SURVEYS AS REQUIRED TO DESIGN THE CONDUIT LAYOUT INCLUDING CONDUIT SIZE AND MOUNTING BRACKETS.
   B. FIRE ALARM CONDUIT SHALL BE ROUTED IN COORDINATION WITH EXISTING CONDITIONS. THE CONDUITS SHOWN ON THE DRAWINGS REPRESENTS A SUGGESTED PATH OF ROUTINGS BASED ON FIELD CONDITIONS. CONTRACTOR SHALL SURVEY THE FIELD AND OBTAIN APPROVAL OF THE CONDUIT ROUTINGS FROM MNR. APPROVED CONDUIT LAYOUT AND APPROVAL SHALL BE SUBMITTED.
   C. CONDUIT SHALL BE PERMITTED TO BE WALL MOUNTED AT THE CEILING OR CEILING MOUNTED AT WALL.
   D. ALL MOUNTING BRACKETS SHALL BE NEW.
   E. CLASS A CONDUIT SHALL COMPLY WITH NFPA 72.
   F. CONDUIT PERCENTAGE (%) FILL REQUIREMENTS PER NEC SHALL BE APPLIED UNDER THIS CONTRACT.

5. PRIOR TO TESTING THE SYSTEM, ALL CABLE SEGMENTS BETWEEN DEVICES SHALL BE TESTED IN ACCORDANCE WITH THE APPROVED CABLE TEST. PROCEDURE. NO DEVICES SHALL BE TERMINATED PRIOR TO THE SUCCESSFUL COMPLETION OF INSULATION RESISTANCE TESTS.

6. THE SYSTEM SHALL BE TESTED IN ACCORDANCE WITH NFPA 72 REQUIREMENTS.

7. THE NEW FIRE ALARM SYSTEM SHALL REPORT TO LOCAL FIRE DEPARTMENT. THE CONTRACTOR SHALL TEST AND VERIFY THE TRANSMISSION OF FIRE ALARM CONDITIONS TO CAMS AS A PART OF THE FIRE ALARM SYSTEM TESTING PROCEDURE.

8. ANY DEFICIENCIES IDENTIFIED DURING INSPECTION AS RESULT OF FALLURE TO COMPLY WITH CONTRACTUAL AND NFPA 72 INSTALLATION REQUIREMENTS SHALL BE CORRECTED BY THE CONTRACTOR AT NO ADDITIONAL COST TO THE AUTHORITY OR THE CONTRACTING PARTY.

9. DEVICE LOCATION SHOWN ON THE DRAWINGS IS APPROXIMATE. THE CONTRACTOR SHALL INSTALL EACH DEVICE PER NFPA 72 AND MNR REQUIREMENTS AS APPLICABLE.

10. REFER TO SEQUENCE OF OPERATIONS FOR PROGRAMMING DETAILS.

11. ALL SYMBOLS ARE NOT DRAWN TO SCALE.

12. FOR DETAILS AND PROVISIONS REFER TO CONTRACT SPECIFICATIONS.

13. FACP SHALL BE ABLE TO ACCEPT INITIATION SIGNALS THAT CAN BE PROGRAMMED TO TRANSMIT 4 SIGNALS: FIRE, CARBON MONOXIDE, SUPERVISORY, AND TROUBLE.

14. FACP SHALL HAVE MONITORING CONNECTION VIA 2 POTS. THE MONITORING CONTRACT SHALL BE COVERED FOR ONE YEAR BY THE CAPITAL PROJECT AND SHALL USE THE OSS-FIRE SAFETY CONTRACTOR. THE PROJECT SHALL BE RESPONSIBLE FOR ANY CHANGES TO THE FIRE ALARM SYSTEM TO INTEGRATE INTO THE OSS-FIRE SAFETY CONTRACTOR.

15. MONITORING CALL DOWN LIST FOR THE DIFFERENT SIGNALS SHALL BE APPROVED BY OSS-FIRE SAFETY.

16. SMOKE AND HEAT DETECTORS SHALL BE LISTED FOR THE CONDITIONS THEY ARE PLACED IN OR ALTERNATIVE COVERAGE, PERMITTED BY NFPA 72 AND ASME A17.1, SHALL BE PROVIDED. NO DEVICES SHALL BE INSTALLED OUTSIDE THE LIMITATIONS OF THEIR LISTING.

17. TECHNICIAN LEVEL TRAINING SHALL BE PROVIDED TO OSS-FIRE SAFETY STAFF (UP TO 5) AND APPROPRIATE MNR TECHNICIANS ON THE SPECIFIC BRAND AND TYPE OF FACP INSTALLED.

INSTALLATION NOTES

1. THE INSTALLATION SHALL COMPLY WITH THE REQUIREMENTS OF NFPA 72.

2. ALL CONDUIT SHALL BE RIGID STEEL HOT-DIPPED GALVANIZED. PROVIDE PVC COATED CONDUIT OUTSIDE ABOVE GROUND.

3. ALL WALL PENETRATIONS SHALL BE FIRE STOPPED (2 HOUR RATING).

4. CONDUIT SHALL BE INTERNALLY SEALED AT THE POINT OF PANEL ENTRY.

5. FOLLOWING THE INSTALLATION AND APPROVAL OF THE NEW FIRE ALARM SYSTEM THE CONTRACTOR SHALL REPAIR, PATCH AND PAINT ALL DAMAGED AREAS TO MATCH SURROUNDING AREAS TO THE SATISFACTION OF THE ENGINEER.

6. COORDINATE ALL WORK WITH EXISTING FIELD CONDITIONS TO AVOID INTERFERENCES.

7. PROVIDE JUNCTION AND PULL BOXES AS REQUIRED TO FACILITATE PULLING OF WIRES. ALL BOXES SHALL BE ACCESSIBLE WITHOUT DAMAGING THE BUILDING STRUCTURE/FINISH.

8. CONTROL/SIGNAL/ AUXILIARY RELAYS SHALL BE 5 ½- 7 FT AFF OR AS PER FIELD CONDITIONS WITH THE ENGINEER'S APPROVAL. CONTROL AND SIGNAL MODULES SHALL BE LOCATED WITHIN 3 FT OF INTERFACED EQUIPMENT.

9. INSTALL MONITOR MODULES, CONTROL RELAYS, TEST STATIONS, AUXILIARY RELAYS AT 60-96" AFF OR AS DIRECTED BY THE ENGINEER.

10. THE FACP SHALL BE MOUNTED SUCH THAT THE DISPLAY IS 5 ½- 6 FT AFF.

11. NOTIFICATION, SIGNALING AND AUXILIARY POWER CIRCUITS ARE PERMITTED TO BE CO-LOCATED WITHIN THE SAME CONDUIT.

12. 120 VAC WIRING FOR FIRE ALARM SYSTEM EQUIPMENT SHALL BE INSTALLED IN ITS OWN SEPARATE AND DEDICATED RACEWAY. REFER TO ELECTRICAL DRAWINGS FOR THESE CIRCUITS.

13. USE OF WIRE NUTS IS NOT ACCEPTABLE FOR ANY WIRING TERMINATIONS.

14. HEAT DETECTORS SHALL BE PROVIDED AS SHOWN ON THE CONTRACT DRAWINGS AND MUST BE COORDINATED WITH THE ELECTRICAL AND MECHANICAL EQUIPMENT FOR EXACT PLACEMENT OF THE DEVICE PRIOR TO THE ISSUANCE OF SHOP DRAWINGS. ALL CONFLICTS SHALL BE BROUGHT TO THE ATTENTION OF THE ENGINEER AND RESOLVED PRIOR TO INSTALLATION. DISPOSITION OF THE SHOP DRAWING SHALL NOT RELIEVE THE CONTRACTOR OF PROVIDING A MAINTAINABLE SYSTEM.

15. PROVIDE LABELS AND TAGGING FOR ALL PANELS, CONDUITS AND ADDRESSABLE DEVICES.

16. PROVIDE CIRCUIT ID LABELS FOR ALL NOTIFICATION APPLIANCES. FOR LAST DEVICE ON A CIRCUIT INDICATE "EOL".

SYMBOL	DESCRIPTION
G WP	AREA SMOKE DETECTOR (G-WIRE GUARD, WP-WEATHER PROOF)
H G WP	AREA HEAT DETECTOR (G-WIRE GUARD, WP-WEATHER PROOF)
WP 15	STROBE (75 CANDEL SETTING FOR WEATHER PROOF APPLIANCES, 15 CANDELA FOR ALL OTHERS) "WP" INDICATES WEATHERPROOF (CEILING MOUNTING)
WP 15	HORN/STROBE (15 CANDELA). "WP" INDICATES WEATHERPROOF.
FACP	FIRE ALARM CONTROL PANEL
F	PULL STATION
K	KNOX BOX THAT IS KEYED TO LOCAL FIRE DEPT.
- - -	PROPOSED UNDERGROUND CONDUIT
——	PROPOSED ABOVE GROUND CONDUIT
—O	CONDUIT UP
—●	CONDUIT DOWN
RR	REMOTE RELAY
RI	RELAY INPUT MODULE
MM	MONITOR MODULE
EOL	END OF LINE RESISTOR

ABBREVIATION	DESCRIPTION
EMR	ELEVATOR MACHINE ROOM
MNR	METRO-NORTH RAILROAD
NAC	NOTIFICATION APPLIANCE CIRCUIT
R	RELAY CIRCUIT
RM	ROOM
SLC	SIGNAL LINE CIRCUIT
WP	WEATHER PROOF

100% RFC SUBMISSION

DESIGNED	VC
DRAWN	WF
CHECKED	GG
APPROVED	GG

STATE OF NEW YORK · GERI L. GOLDMAN · LICENSED PROFESSIONAL ENGINEER · No. 039763

NO.	DATE		DRWN	CHKD	APPVD

REVISION

CONFORMED

NO.	DATE		DRWN	CHKD	APPVD

REVISION

STV 100 Years
225 PARK AVENUE SOUTH, NEW YORK, NY 10003

MTA Metro-North Railroad
420 Lexington Avenue
New York, NY 10017

TITLE
HARTSDALE AND SCARSDALE STATION IMPROVEMENTS
FIRE ALARM SYSTEM GENERAL NOTES, SYMBOL LIST, & ABBREVIATION LIST
SCARSDALE STATION

CONTRACT NO. 1000106733
SCALE
DATE 08/03/2021
DRAWING NO. SCD-FA-001
SHEET 103 OF 112

SYSTEM INPUTS		SYSTEM OUTPUTS: FACP FUNCTIONALITY			NOTIFICATION		CONTROL				
		A: ACTIVATE SOUNDER, FIRE LED AND TEXTUALE DISPLAY ON PANEL	B: ACTIVATE SOUNDER, SUPERVISORY LED AND TEXTUALE DISPLAY ON PANEL AND ANNUNCIATOR	C: ACTIVATE SOUNDER, TROUBLE LED AND TEXTUALE DISPLAY ON PANEL AND ANNUNICATOR	D: ACTIVATE HORN/STROBES IN EMR AND OUTSIDE EMR	E: NOTIFY RCC CAMS OF ALARM CONDITION VIA IP CAPTURE CARD OR DACT	F: NOTIFY RCC CAMS OF SUPERVISORY CONDITION CIA IP CAPTURE CARD OR DACT	G: NOTIFY RCC CAMS OF TROUBLE CONDITION VIS IP CAPTURE CARD OR DACT	H: RECALL W1 TO LOWER LEVEL	I: RECALL W1 TO UPPER LEVEL	J: ACTIVATE CAB WARNING SIGNAL SIGN IN W1
ELEV W1 FIRE ALARM MANUAL PULL STATION IN EMR AND COMM. RM.	1	X			X	X					
ELEV W1 EMR DETECTOR	2	X			X	X				X	X
ELEV W1 COMM. RM. DETECTOR	3	X			X	X					
ELEV W1 TOP OF SHAFT DETECTOR	4	X			X	X			X		X
ELEV W1 PIT DETECTOR	5	X			X	X				X	X
ELEV W1 PLATFORM DETECTOR (LOWER LEVEL)	6	X			X	X				X	
ELEV W1 OVERPASS DETECTOR (UPPER LEVEL)	7	X			X	X			X		
GENERAL TROUBLE	8			X				X			
AC POWER LOSS	9			X				X			
BATTERY TROUBLE	10			X				X			
DIRTY SMOKE DETECTOR	11			X				X			
EXCESSIVELY DIRTY SD	12			X				X			
CLASS A TROUBLE	13			X				X			
SHORT CKT TROUBLE	14			X				X			
24 VDC LOSS	15			X				X			
IP CAPTURE CARD TBL	16		X				X				
IP CAPTURE POWER LOSS	17		X				X				

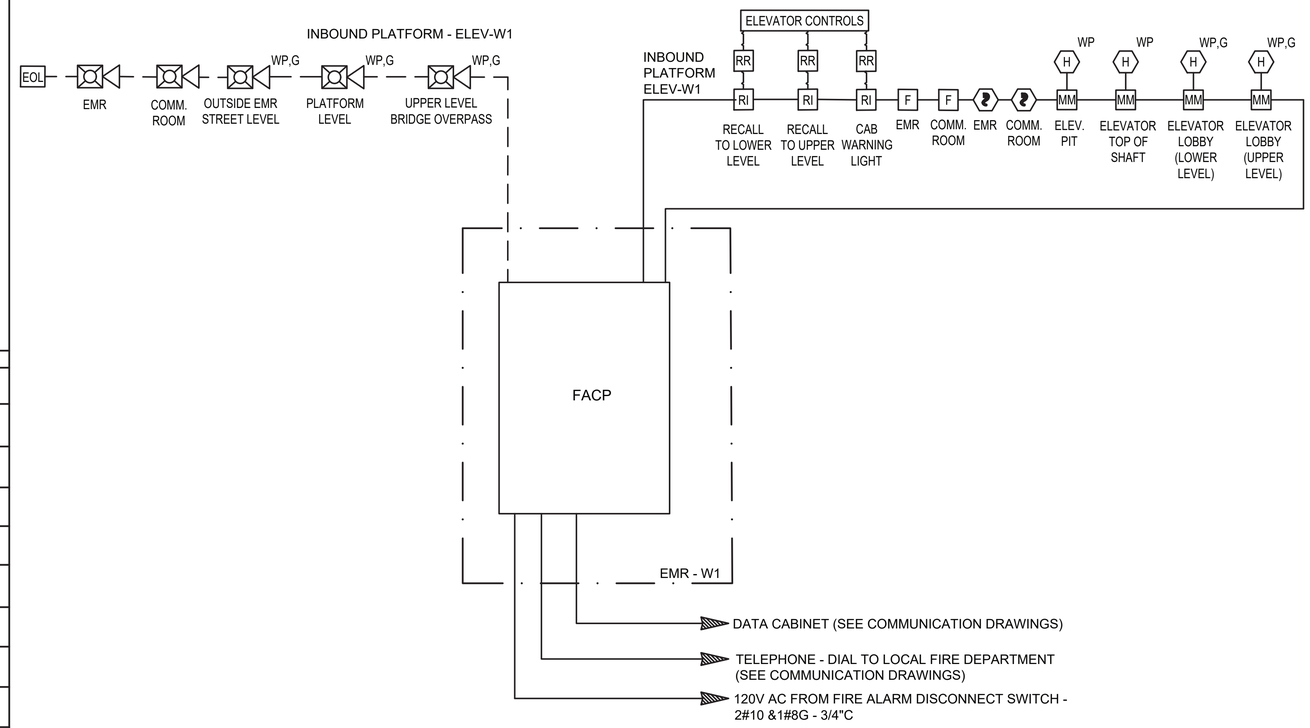

CIRCUIT DESTINATION	CIRCUIT TYPE	CABLE TYPE
— — — — —	NAC	2-1PR. #12 AWG NYC FPLP - 3/4"C
————————	SLC	1PR. #16 AWG NYC FPLP, T/S - 3/4"C
- - - - - - - - - -	R	2/C #14 AWG

NOTES:

1. REFER TO PLAN DRAWINGS FOR THE LOCATION OF THE DEVICES.
2. PHASE 1 ELEVATOR CONTROL
   A. PRIMARY LEVEL IS LOWER LEVEL:
      - RECALL TO PRIMARY LEVEL WHEN TOP OF SHAFT DETECTOR OR UPPER LOBBY DETECTOR IS ACTIVATED.
   B. ALTERNATE LEVEL IS UPPER LEVEL:
      - RECALL TO ALTERNATE LEVEL WHEN LOWER LOBBY DETECTOR , ELEVATOR MACHINE ROOM DETECTOR, OR PIT DETECTOR IS ACTIVATED.
   C. PROVIDE REQUIRED MODULE TO CONNECT TO THE ELEVATOR CONTROLLERS.
3. PROVIDE REQUIRED COMMUNICATION EQUIPMENT TO INTERFACE WITH THE TELEPHONE PROVIDER TO DIAL TO MTA POLICE AND OCC IN THE EVENT OF ALARM.

100% RFC SUBMISSION

DESIGNED	VC
DRAWN	WF
CHECKED	GG
APPROVED	GG

STATE OF NEW YORK · GERI L. GOLDMAN · No. 039808 · LICENSED PROFESSIONAL ENGINEER

NO.	DATE		DRWN	CHKD	APPVD

REVISION

NO.	DATE	CONFORMED	DRWN	CHKD	APPVD

REVISION

STV 100 Years
225 PARK AVENUE SOUTH, NEW YORK, NY 10003

MTA Metro-North Railroad
420 Lexington Avenue
New York, NY 10017

TITLE
HARTSDALE AND SCARSDALE STATION IMPROVEMENTS
FIRE ALARM SYSTEM RISER DIAGRAM & SEQUENCE OF OPERATION
SCARSDALE STATION

CONTRACT NO. 1000106733
SCALE
DATE 08/03/2021
DRAWING NO. SCD-FA-002
SHEET 104 OF 112

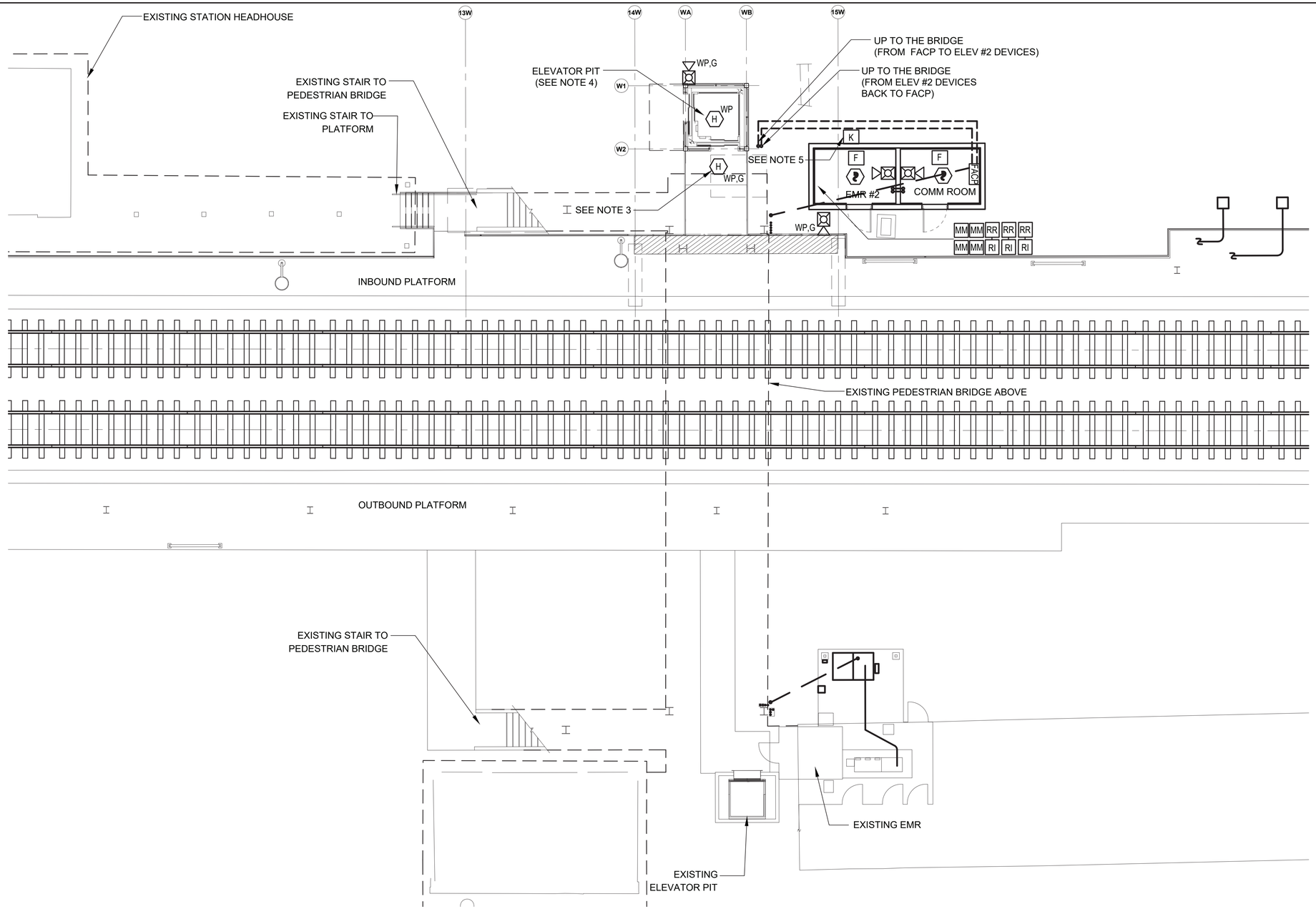

1 FIRE ALARM PLAN - PLATFORM LEVEL

1/8"=1'-0"

0 4' 8' 16'

NOTES:

1. FOR SYMBOLS, ABBREVIATIONS, NOTES, RISER DIAGRAM AND SEQUENCE OF OPERATION, SEE DRAWING HTD-FA-001 AND HTD-FA-002.
2. EXACT LOCATION OF THE EXTERIOR HORN/STROBE SHALL COMPLY WITH METRO-NORTH REQUIREMENTS.
3. HEAT DETECTOR SHALL BE MOUNTED WITHIN 21 FEET OF THE ELEVATOR DOOR.
4. HEAT DETECTOR SHALL BE MOUNTED AT HIGHEST LEVEL POSSIBLE WHEN ELEVATOR CAB IS AT THE LOWEST LEVEL.
5. KNOX BOX TO BE IN ACCORDANCE WITH METRO NORTH AND LOCAL FIRE DEPARTMENT REQUIREMENT. PROVIDE SUBMITTAL FOR APPROVAL. ELEVATOR KEY SHALL BE 1620.

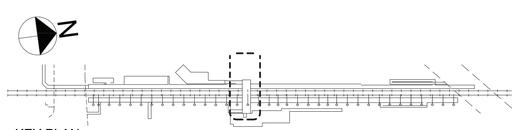

KEY PLAN

100% RFC SUBMISSION

DESIGNED	VC
DRAWN	SK
CHECKED	GG
APPROVED	GG

STATE OF NEW YORK · GERI I. GOLDMAN · No. 069069 · LICENSED PROFESSIONAL ENGINEER

NO.	DATE		DRWN	CHKD	APPVD

REVISION

NO.	DATE	CONFORMED	DRWN	CHKD	APPVD

REVISION

STV 100 Years
225 PARK AVENUE SOUTH, NEW YORK, NY 10003

MTA Metro-North Railroad
420 Lexington Avenue
New York, NY 10017

TITLE
HARTSDALE AND SCARSDALE STATION IMPROVEMENTS

FIRE ALARM PLAN - PLATFORM LEVEL

SCARSDALE STATION

CONTRACT NO. 1000106733

SCALE 1/8"=1'-0"

DATE 08/03/2021

DRAWING NO. SCD-FA-101

SHEET 105 OF 112

NOTES:

1. FOR SYMBOLS, ABBREVIATIONS, NOTES, RISER DIAGRAM AND SEQUENCE OF OPERATION, SEE DRAWING SCD-FA-001.
2. EXACT LOCATION OF THE EXTERIOR HORN/STROBE SHALL COMPLY WITH METRO-NORTH REQUIREMENTS.

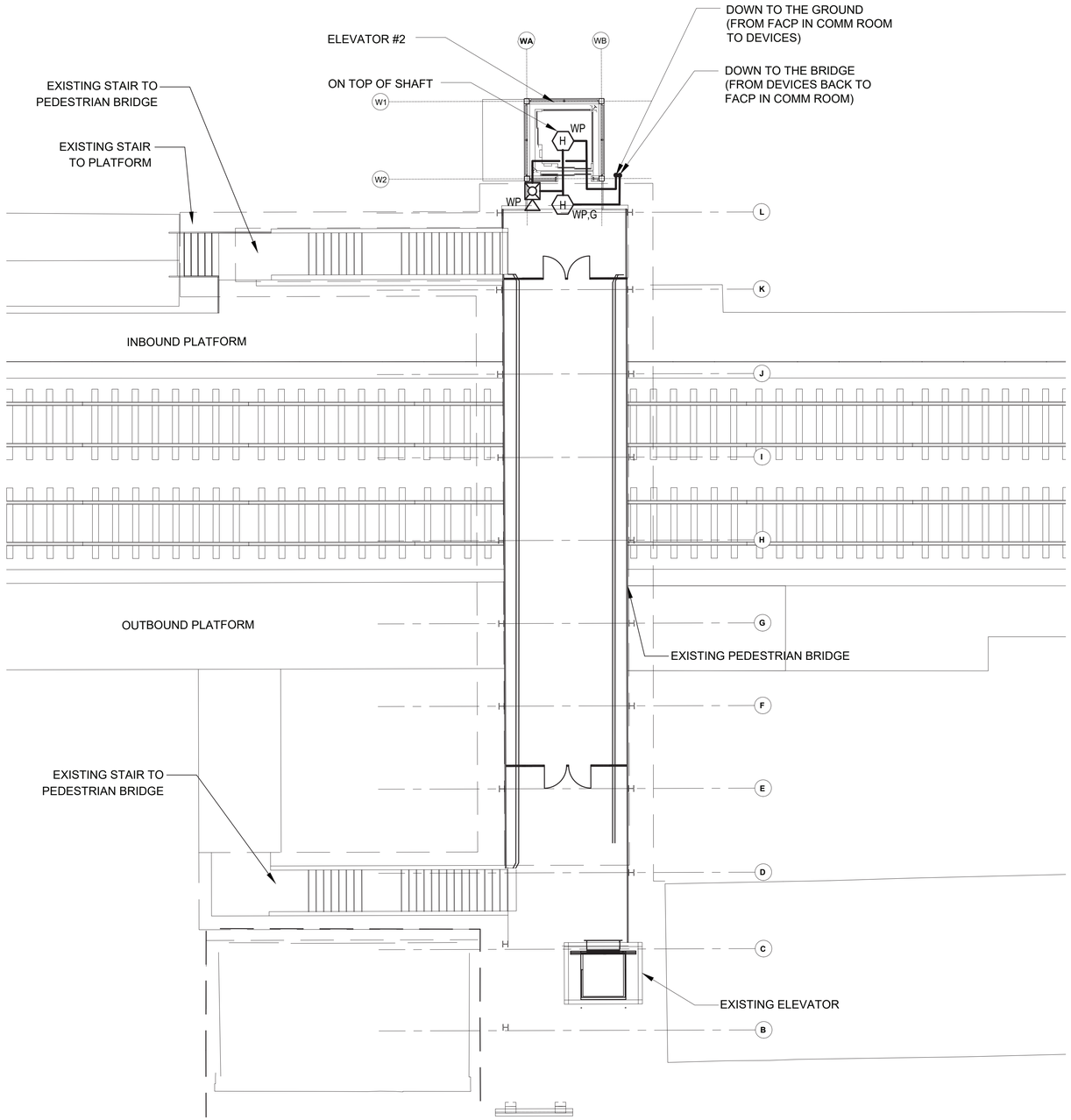

1 FIRE ALARM PLAN - OVERPASS LEVEL

1/8"=1'-0"

0 4' 8' 16'

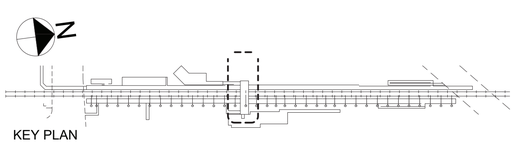

KEY PLAN

100% RFC SUBMISSION

DESIGNED	VC
DRAWN	WF
CHECKED	GG
APPROVED	GG

STATE OF NEW YORK · GERI L. GOLDMAN · LICENSED PROFESSIONAL ENGINEER · No. 039058

NO.	DATE		DRWN	CHKD	APPVD

REVISION

CONFORMED

NO.	DATE		DRWN	CHKD	APPVD

REVISION

STV 100 Years
225 PARK AVENUE SOUTH, NEW YORK, NY 10003

MTA Metro-North Railroad
420 Lexington Avenue
New York, NY 10017

TITLE
HARTSDALE AND SCARSDALE STATION IMPROVEMENTS
FIRE ALARM PLAN - OVERPASS LEVEL
SCARSDALE STATION

CONTRACT NO. 1000106733
SCALE 1/8"=1'-0"
DATE 08/03/2021
DRAWING NO. SCD-FA-102
SHEET 106 OF 112

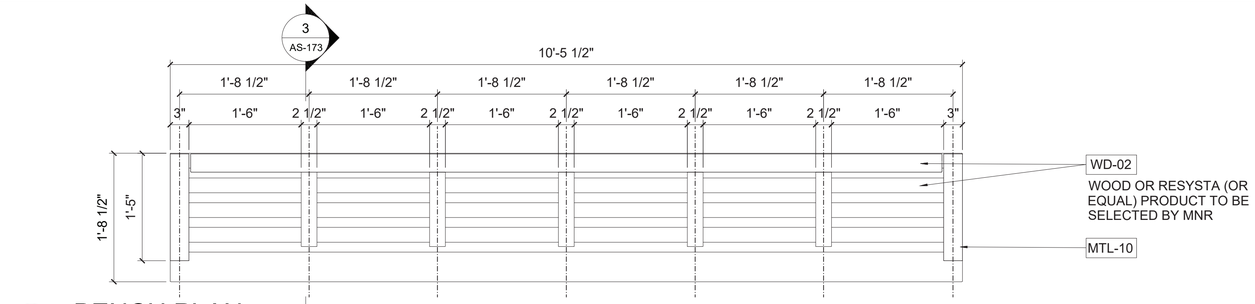

1 BENCH PLAN

1"=1'-0"

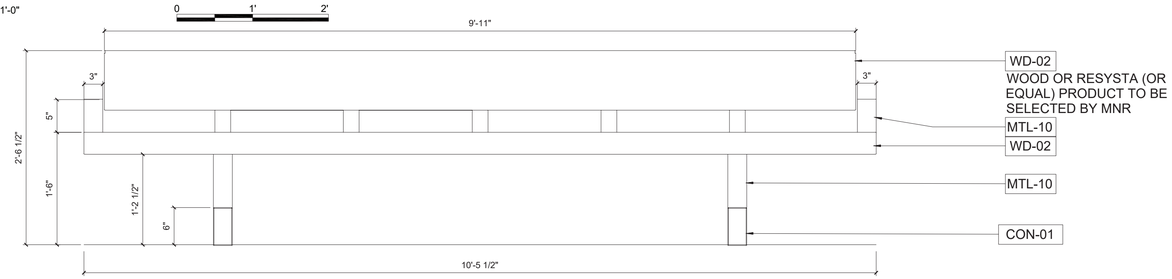

2 AS-173 BENCH - FRONT ELEVATION

1 1/2"=1'-0"

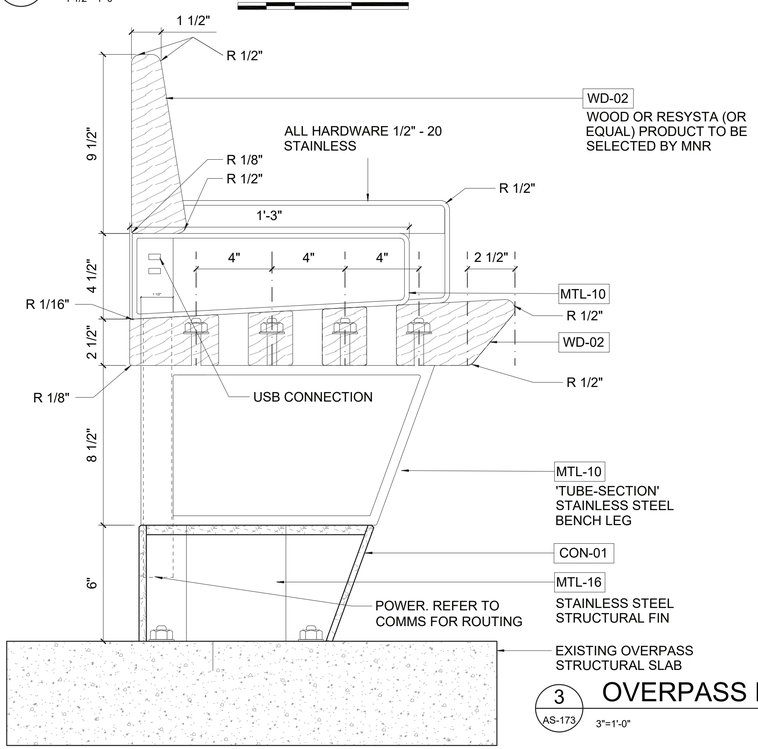

3 AS-173 OVERPASS BENCH - SECTION

3"=1'-0"

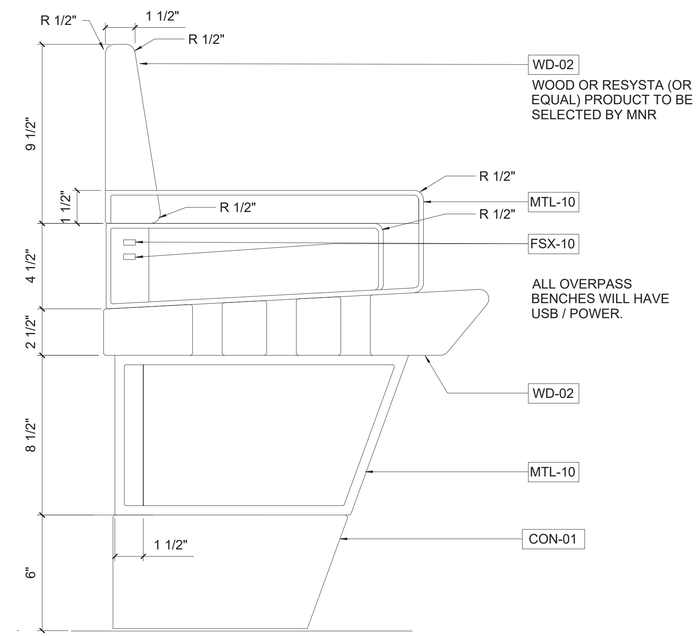

4 AS-173 OVERPASS BENCH - ELEVATION

3"=1'-0"

100% RFC SUBMISSION

DESIGNED	PL
DRAWN	VD
CHECKED	EC
APPROVED	PL

REGISTERED ARCHITECT PAUL N. LIGNITZ 28218 STATE OF NEW YORK
8/2/2021

NO.	DATE		DRWN	CHKD	APPVD

REVISION

CONFORMED

NO.	DATE		DRWN	CHKD	APPVD

REVISION

STV 100 Years
225 PARK AVENUE SOUTH, NEW YORK, NY 10003

MTA Metro-North Railroad
420 Lexington Avenue
New York, NY 10017

TITLE
HARTSDALE AND SCARSDALE STATION IMPROVEMENTS

BENCH - PLANS, ELEVATIONS & DETAILS

SCARSDALE STATION

CONTRACT NO. 1000106733

SCALE: AS NOTED

DATE: 08/03/2021

DRAWING NO. STD-AS-173

SHEET 107 OF 112

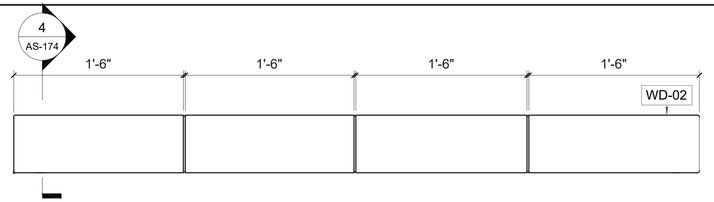

1 LEANING BAR - PLAN
1 1/2"=1'-0"
0 1' 1' 6"

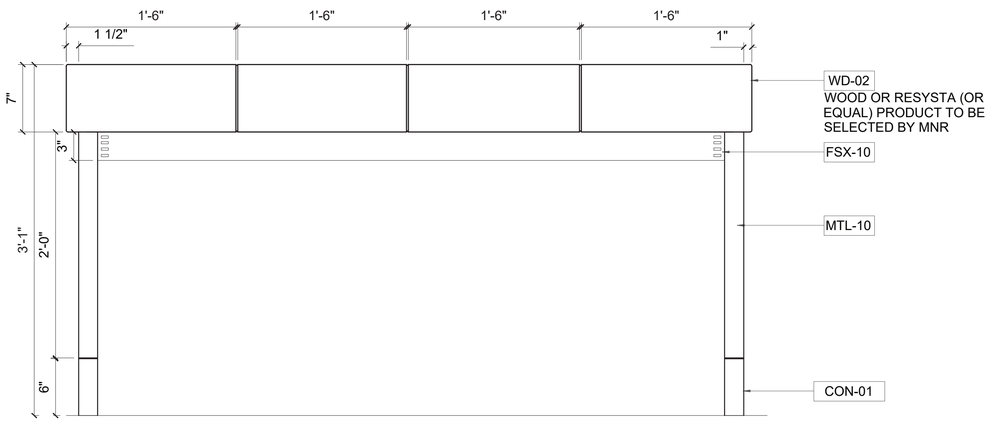

2 AS-174 LEANING BAR - FRONT ELEVATION
1 1/2"=1'-0"
0 1' 1' 6"

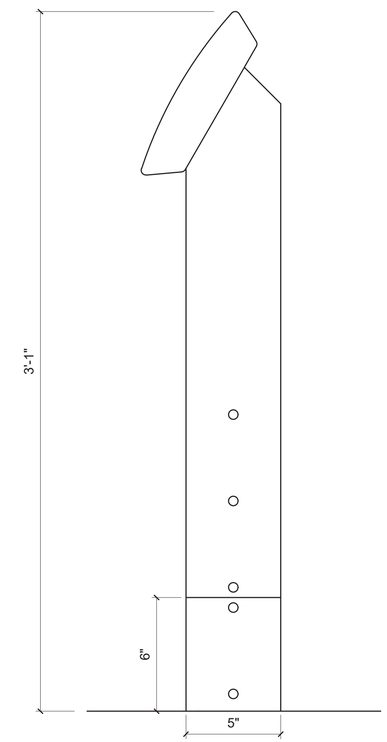

3 AS-174 LEANING BAR - SIDE ELEVATION
3"=1'-0"
0 3" 6" 9"

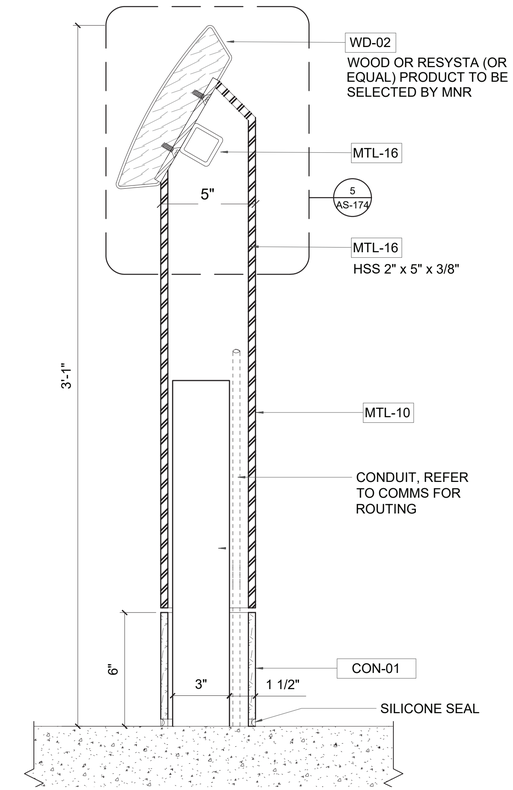

4 AS-174 LEANING BAR - SECTION AA
3"=1'-0"
0 3" 6" 9"

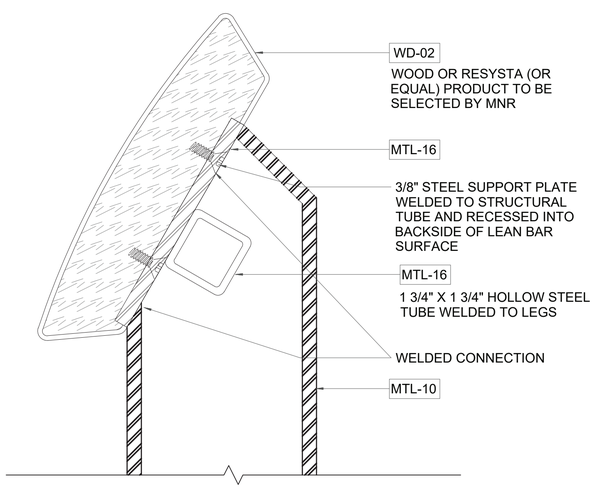

5 AS-174 LEANING BAR - DETAIL SECTION
6"=1'-0"
0 2" 4"

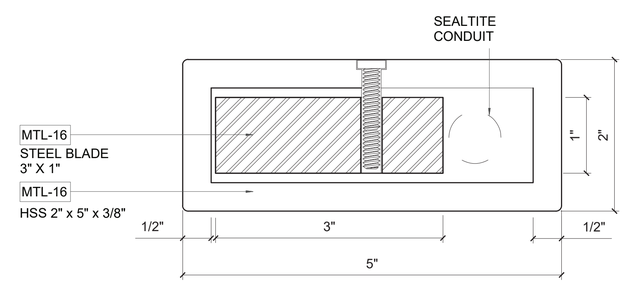

6 AS-174 LEANING BAR - PLAN SECTION
6"=1'-0"
0 2" 4"

100% RFC SUBMISSION

DESIGNED	PL
DRAWN	VD
CHECKED	EC
APPROVED	PL

REGISTERED ARCHITECT PAUL N. LIGNITZ 28218 STATE OF NEW YORK
8/2/2021

NO.	DATE		DRWN	CHKD	APPVD

REVISION

NO.	DATE	CONFORMED	DRWN	CHKD	APPVD

REVISION

STV 100 Years
225 PARK AVENUE SOUTH, NEW YORK, NY 10003

MTA Metro-North Railroad
420 Lexington Avenue
New York, NY 10017

TITLE
HARTSDALE AND SCARSDALE STATION IMPROVEMENTS

LEANING BAR - PLANS, ELEVATIONS & DETAILS

SCARSDALE STATION

CONTRACT NO. 1000106733
SCALE AS NOTED
DATE 08/03/2021
DRAWING NO. STD-AS-174
SHEET 108 OF 112

PLUMBING INDEX SHEET

GENERAL NOTES

1. ALL MATERIALS AND APPARATUS SHALL BE INSTALLED IN ACCORDANCE WITH ALL THE RULES AND REGULATIONS OF THE NEW YORK STATE BUILDING CODES AND ALL OTHER AUTHORITIES HAVING JURISDICTION.
2. BEFORE SUBMITTING PROPOSAL, BIDDERS SHALL CAREFULLY EXAMINE EXISTING FIELD CONDITIONS AND CONTRACT DRAWINGS OF ALL TRADES. SUBMISSION OF PROPOSAL WILL BE CONSTRUCTED AS EVIDENCE THAT REQUIRED EXAMINATION HAS BEEN MADE. TATER CLAIMS FOR EXTRA LABOR, EQUIPMENT AND MATERIALS REQUIRED DUE TO EXISTING FIELD CONDITIONS, WHICH COULD HAVE BEEN FORESEEN, WILL NOT BE RECOGNIZED.
3. PROCUREMENT OF ALL PERMITS AND CERTIFICATES FOR THE INSTALLATION OF THESE SYSTEMS SHALL BE PERFORMED IN ACCORDANCE WITH ALL THE RULES AND REGULATIONS OF THE NEW YORK STATE BUILDING CODES AND ALL OTHER AUTHORITIES HAVING JURISDICTION.
4. THE CONTRACTOR SHALL COORDINATE HIS WORK WITH ALL OTHER TRADES AND ALL EXISTING CONDITIONS, AND PROVIDE ALL REQUIRED TO OFFSET ALL ADDITIONAL PIPING AND FITTINGS AT NO EXTRA COST. TO AVOID EXISTING / NEW STRUCTURE. ARCHITECTURAL, MECHANICAL AND ELECTRICAL INTERFERENCES, WHETHER INDICATED OR NOT, BEFORE INSTALLING WORK.
5. CONNECTION TO EXISTING SERVICES SHALL BE PERFORMED DURING OFF-WORK HOURS OF ON WEEKENDS IN PREMIUM TIME. CONNECTION OF NEW WORK TO EXISTING WORK SHALL BE PERFORMED IN NEAT AND APPROVE MANNER, RESTORING EXISTING WORK DISTURBED TO ORIGINAL CONDITION.
6. ALL NEW PIPING SHALL BE RUN CLOSE TO BEAMS, WALLS AND SLABS, SQUARE TO BUILDING CONSTRUCTION, CONCEALED ABOVE HUNG CEILINGS AND WITHIN FURRED SPACES.
7. ALL EXISTING PIPING, INDICATED AND /OR NOTED TO REMOVED, SHALL BE REMOVED BACK TO EXISTING STACKS, RISERS OR MAINS AND CAPPED / PLUGGED AT TERMINAL POINT UNLESS OTHERWISE DIRECTED BY OWNER OR ENGINEER.
8. THE CONTRACTOR SHALL NOT INTERRUPT ANY OF SERVICES OF THE EXISTING BUILDING WITHOUT THE EXPRESSED WRITTEN PERMISSION OF THE OWNER AND SUCH INTERRUPTIONS SHALL BE AS BRIEF AS POSSIBLE, AND AT THE TIME AGREED TO WITH THE OWNER.
9. UNDER NO CIRCUMSTANCES WILL THIS CONTRACTOR OR HIS WORKMEN BE PERMITTED TO USE ANY PART OF THE BUILDING AS A SHOP EXCEPT AREAS DESIGNATED BY OWNER.
10. EXISTING PIPING DAMAGED AS A RESULT OF PERFORMING THE WORK OF THIS CONTRACT SHALL BE REPAIRED OF REPLACE AS REQUIRED WITH MATERIAL AND FINIS TO MATCH EXISTING.
11. DRAWINGS ARE DIAGRAMMATIC AND INDICATE GENERAL ARRANGEMENT.
12. THIS CONTRACTOR SHALL PATCH AND FIRE PROOF ALL OPENINGS IN FLOORS OR WALLS AS REQUIRED.

PLUMBING INSTALLATION CRITERIA:

EACH BIDDER SHALL VISIT THE SITE AND BECOME INFORMED AS TO THE CONDITION OF THE PREMISES AND THE EXTENT AND CHARACTER OF WORK REQUIRED. NO ADDITIONAL COMPENSATION WILL BE APPROVED DUE TO FIELD CONDITIONS.

1. COORDINATE POSITION OF SLEEVES AND OPENINGS THROUGH FLOOR WITH THE GENERAL CONTRACTOR.
2. ALL PIPING AND EQUIPMENT SHALL BE SUBSTANTIALLY SUPPORTED FROM THE BUILDING STRUCTURE. HANGER AND SUPPORTS SHALL BE SPECIFICALLY APPROVED FOR USE IN PLUMBING SYSTEMS.
   A. WHERE OVERHEAD CONSTRUCTION DOES NOT PERMIT FASTENING OF HANGER RODS IN REQUIRED LOCATIONS, PROVIDE ADDITIONAL STEEL FRAMING AS REQUIRED AND APPROVED.
   B. NO PLUMBING PIPING SHALL BE HUNG FROM THE PIPING OF OTHER TRADES OR DUCTWORK. HANGERS SHALL BE OF HEAVY CONSTRUCTION SUITABLE FOR THE SIZE OF PIPE TO BE SUPPORTED.
3. ALL HORIZONTAL PIPING RUNS WILL BE AT THE HIGHEST PRACTICAL ELEVATION AND NOT LESS THAN 6" ABOVE THE FLOOR SO AS TO PROVIDE CLEARANCE.

LIST OF SYMBOLS	
PD	PUMP DISCHARGE
	PIPE UP OR RISE
	PIPE DN OR DROP
	CAP
	CUT AND RECONNECT
	PIPE BREAK
	GAS SAFETY SHUT OFF VALVE – MAXON
	GAS SERVICE VALVE
	GAS COCK
	VALVE ON VERTICAL – VOV
	SHUT OFF VALVE
	CHECK VALVE

NOTE: NOT ALL SYMBOLS, ABBREVIATIONS AND EQUIPMENT ABBREVIATIONS INDICATED APPEAR ON THESE CONTRACT DRAWINGS

REFERENCE SYMBOLS

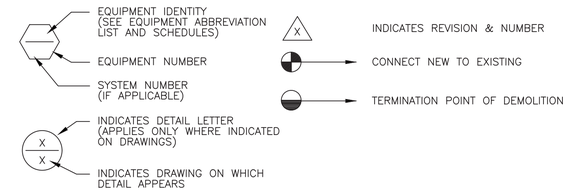

LIST OF ABBREVIATIONS	
AFF	ABOVE FINISH FLOOR
BLDG	BUILDING
CLG	CEILING
CONN	CONNECTION
CONT	CONTINUED
CFH	CUBIC FEET PER HOUR
DIM	DIMENSION
DN	PIPE DOWN THRU FLOOR
DROP	PIPE DROPPING BETWEEN FLOORS
DWG	DRAWING
EL	ELEVATION
EXIST	EXISTING
FL	FLOOR
GPM	GALLONS PER MINUTE
HP	HORSE POWER
INV EL	INVERT ELEVATION
NC	NORMALLY CLOSED
NO	NORMALLY OPEN
N.T.S	NOT TO SCALE
PD	PUMP DISCHARGE
PLBG	PLUMBING
RISE	PIPE RISING BETWEEN FLOORS
RM	ROOM
RPM	ROTATION PER MINUTE
SQ FT	SQUARE FEET
TYP	TYPICAL
UP	PIPE RISING THRU FLOOR
VIF	VERIFY IN FIELD
VOV	VALVE ON VERTICAL
WC	WATER COLUMN
WTS	WATER TIGHT SLEEVE

100% RFC SUBMISSION

DESIGNED	AD
DRAWN	AD
CHECKED	JP
APPROVED	JP

STATE OF NEW YORK · JAMES PERISE · 089294 · LICENSED PROFESSIONAL ENGINEER

NO.	DATE		DRWN	CHKD	APPVD

REVISION

CONFORMED

NO.	DATE		DRWN	CHKD	APPVD

REVISION

STV 100 Years
225 PARK AVENUE SOUTH, NEW YORK, NY 10003

Metro-North Railroad
420 Lexington Avenue
New York, NY 10017

TITLE
HARTSDALE AND SCARSDALE STATION IMPROVEMENTS
SYMBOLS LEGEND ABBREVIATIONS & GENERAL NOTES
SCARSDALE STATION

CONTRACT NO. 1000106733
SCALE
DATE 08/03/2021
DRAWING NO. SCD-P-001
SHEET 109 OF 112

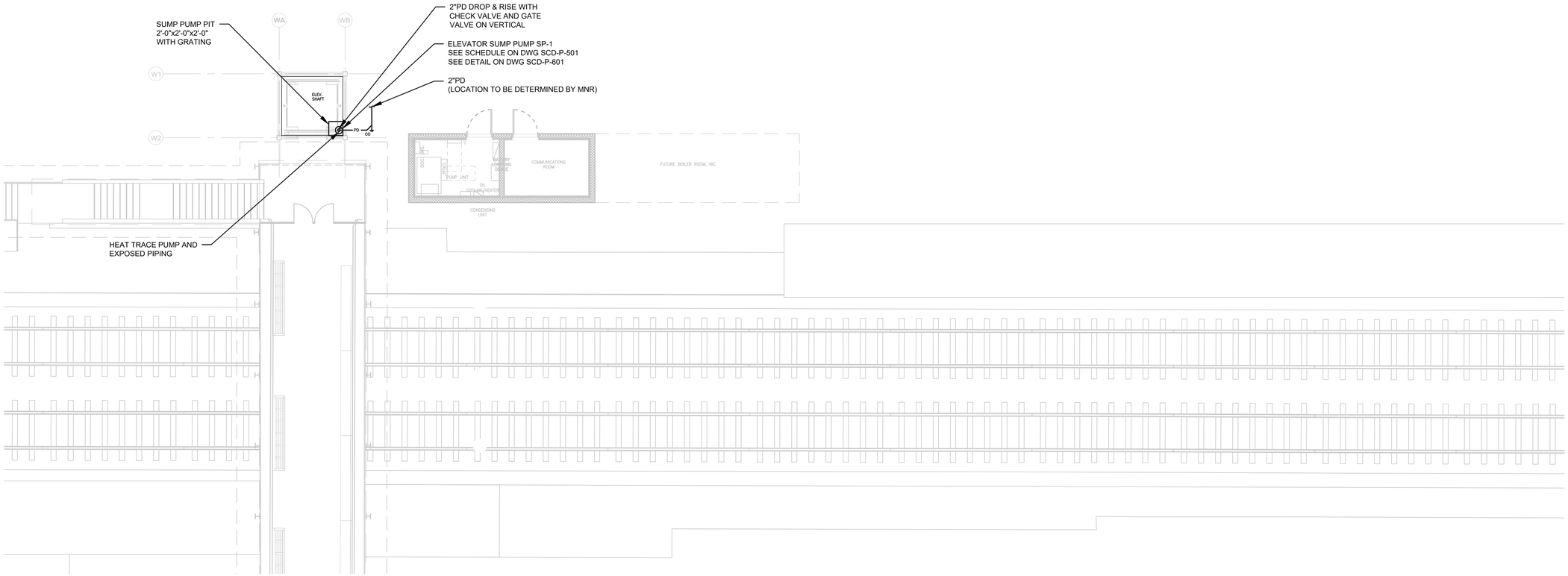

NOTES:

1. FOR SYMBOLS, ABBREVIATIONS AND GENERAL NOTES SEE DRAWING SCD-P-001

SUMP PUMP DISCHARGE NOTES:

1. PROVIDE ELECTRICAL HEAT TRACING ON PUMP AND PUMP DISCHARGE LINES CONTAINING STANDING WATER.
2. INSULATE ALL HEAT TRACED PUMP DISCHARGE LINES.
3. FIELD ROUTE AND COORDINATE WITH MNR DISCHARGE DRAIN LINE AT 12" ABOVE GRADE. SPILL DISCHARGE ON GRADE AND PROVIDE SLEEVE AND SEAL AT PENETRATION.

1 PLUMBING PLATFORM PART PLAN

1/8"=1'-0"

0 4' 8' 16'

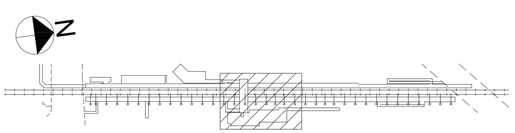

100% RFC SUBMISSION

DESIGNED	AD
DRAWN	AD
CHECKED	JP
APPROVED	JP

STATE OF NEW YORK · JAMES PERISE · 089294 · LICENSED PROFESSIONAL ENGINEER

NO.	DATE		DRWN	CHKD	APPVD

REVISION

CONFORMED

NO.	DATE		DRWN	CHKD	APPVD

REVISION

STV 100 Years
225 PARK AVENUE SOUTH,
NEW YORK, NY 10003

MTA Metro-North Railroad
420 Lexington Avenue
New York, NY 10017

TITLE
HARTSDALE AND SCARSDALE STATION IMPROVEMENTS
PLUMBING
SCARSDALE STATION
PLATFORM PART PLAN
SCARSDALE STATION

CONTRACT NO. 1000106733
SCALE
DATE 08/03/2021
DRAWING NO. SCD-P-101
SHEET 110 OF 112

PUMP SCHEDULE

PUMP NO.	LOCATION	TYPE	SERVICE	MANUFACTURER	MODEL		MAX FLOW (GPM)	MAX HD (FT)	RPM	MOTOR DATA				REMARKS
										HP	PHASE	CYCLE	VOLTS	
SP-1	PASSENGER ELEVATOR	SIMPLEX SUBMERSIBLE PUMP	ELEVATOR PIT	STANCOR	SE50		74	37	1,750	$\frac{1}{2}$	1	60	115	SIMPLEX OIL SENSING ELEVATOR SUMP PUMP. SINGLE DIRECT PLUG-IN POWER.

100% RFC SUBMISSION

DESIGNED AD
DRAWN AD
CHECKED JP
APPROVED JP

STATE OF NEW YORK
JAMES PERISE
089294
LICENSED PROFESSIONAL ENGINEER

NO.	DATE		DRWN	CHKD	APPVD

REVISION

CONFORMED

NO.	DATE		DRWN	CHKD	APPVD

REVISION

STV 100 Years
225 PARK AVENUE SOUTH,
NEW YORK, NY 10003

MTA Metro-North Railroad
420 Lexington Avenue
New York, NY 10017

TITLE
HARTSDALE AND SCARSDALE STATION IMPROVEMENTS
PLUMBING
SCARSDALE STATION
SCHEDULES
SCARSDALE STATION

CONTRACT NO. 1000106733
SCALE
DATE 08/03/2021
DRAWING NO. SCD-P-501
SHEET 111 OF 112

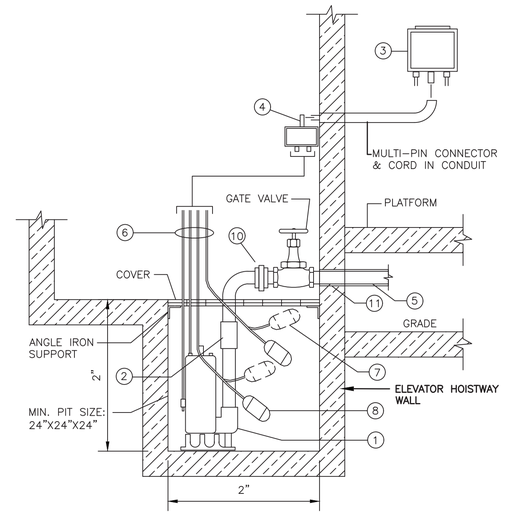

KEY NOTES:

1. SUBMERSIBLE SUMP PUMP 1/2 HP, 115 VOLT, 1,750 RPM, 2" DISCHARGE CONNECTION
2. CHECK VALVE
3. 115V, SINGLE PHASE (1Ø) CONTROL SYSTEM WITH BUILT-IN AUDIBLE AND VISUAL ALARM FOR WHEN PUMP DOES NOT RUN DUE TO OIL IN PIT OR HIGH LIQUID ALARM. PROVIDE SILENCING BUTTON FOR AUDIBLE ALARM BUILT INTO PANEL. PANEL SHALL HAVE ADDITIONAL CONTACT FOR A REMOTE ALARM LOCATION. LIGHTS FOR OIL SPILL, POWER, HIGH LIQUID LEVEL, OVERLOAD, & PUMP RUN.
4. JUNCTION BOX SHALL BE PROVIDED WITH MULTI-PIN CONNECTOR AND CORD OF REQUIRED LENGTHS TO REACH PANEL.
5. ALL PUMP PRESSURE DISCHARGE PIPING SHALL BE PROTECTED WITH TAPECOAT CORROSION PROTECTION TAPE AND PROVIDED WITH HEAT TRACING WHEN PIPE IS BELOW FREEZING. IN ADDITION, DISCHARGE PIPING SHALL CONNECT TO THE SITE DRAINAGE SYSTEM (CONNECTION TO BE DETERMINED BY MNR).
6. OIL-MINDER CABLES: POWER CABLE, PROBE CABLE, HIGH- LIQUID ALARM CABLE AND PUMP-ON FLOAT CABLE.
7. HIGH-LIQUID ALARM FLOAT WITH CLAMP DEVICE TO MOUNT TO PUMP DISCHARGE PIPING.
8. PUMP-ON FLOAT
9. PROVIDE A MINIMUM FIVE FEET EXTRA OF EACH CABLE (SLACK) ROLLED CLAMPED TO THE DISCHARGE PIPE TO ALLOW FOR THE REMOVAL OF THE PUMP FROM THE PIT.
10. HEAT TRACING
11. PROVIDE LINK SEAL OR EQUAL AT WALL PENETRATION.

1 / 601 HYDRAULIC ELEVATOR SUMP PUMP DETAIL

NOT TO SCALE

100% RFC SUBMISSION

DESIGNED	AD
DRAWN	AD
CHECKED	JP
APPROVED	JP

STATE OF NEW YORK · JAMES PERISE · 089294 · LICENSED PROFESSIONAL ENGINEER

NO.	DATE		DRWN	CHKD	APPVD

REVISION

NO.	DATE	CONFORMED	DRWN	CHKD	APPVD

REVISION

STV 100 Years
225 PARK AVENUE SOUTH,
NEW YORK, NY 10003

MTA Metro-North Railroad
420 Lexington Avenue
New York, NY 10017

TITLE
HARTSDALE AND SCARSDALE STATION IMPROVEMENTS
PLUMBING
SCARSDALE STATION
DETAILS
SCARSDALE STATION

CONTRACT NO. 1000106733
SCALE
DATE 08/03/2021
DRAWING NO. SCD-P-601
SHEET 112 OF 112