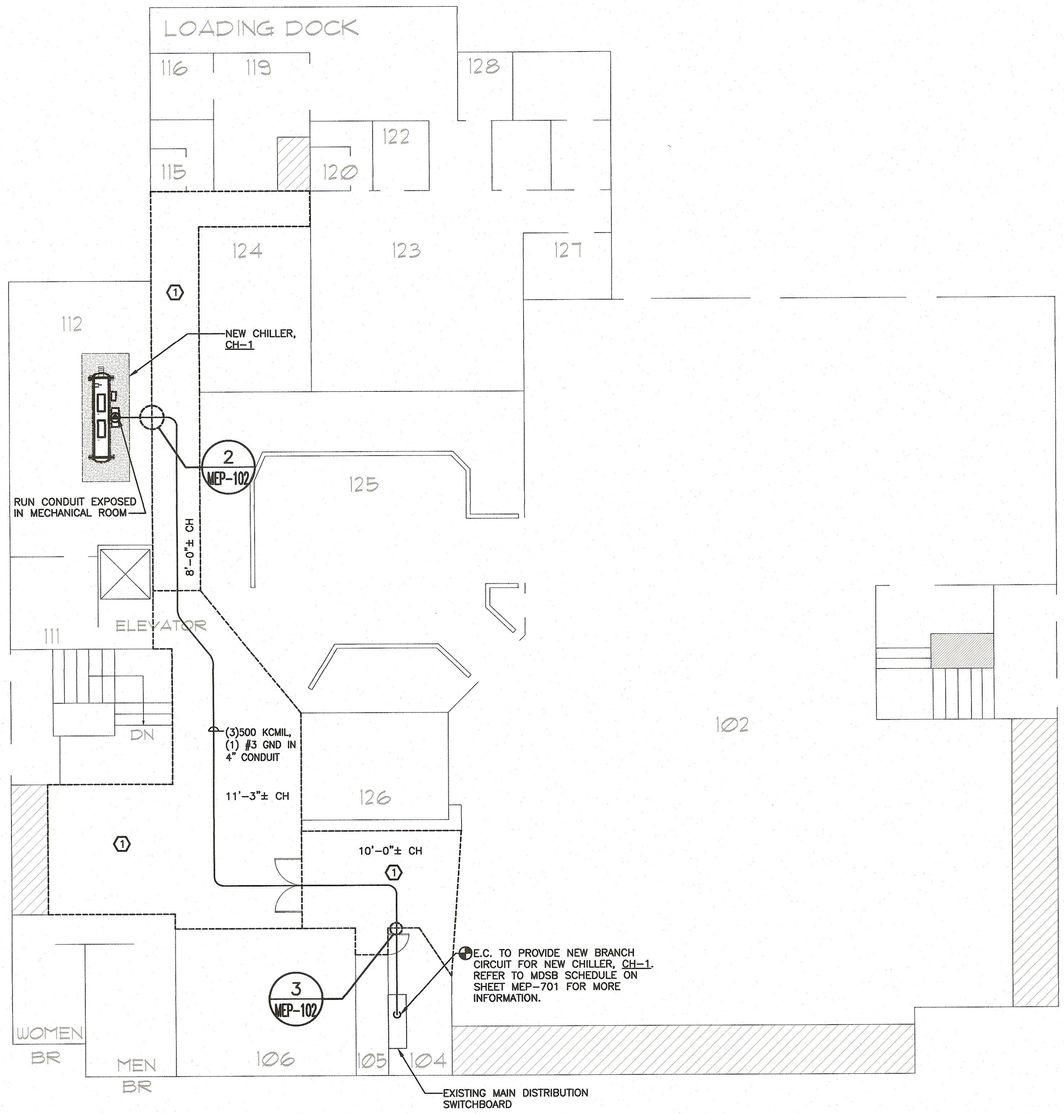

1 PARTIAL BASEMENT ELECTRICAL DISTRIBUTION PLAN
NTS

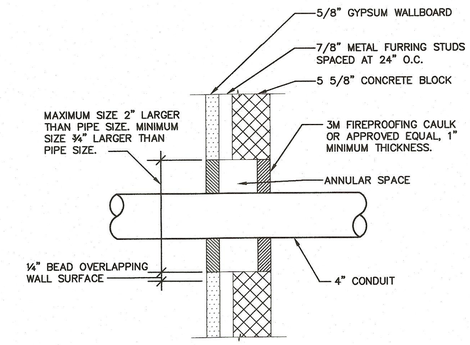

2 CONDUIT PENETRATION IN MECHANICAL ROOM WALL
N.T.S.

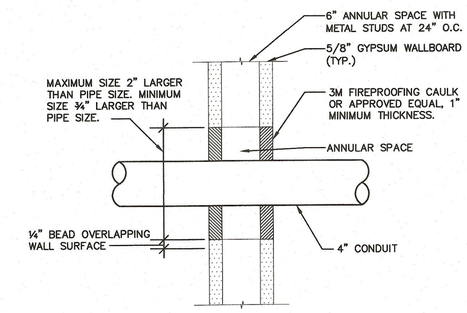

3 CONDUIT PENETRATION IN ELECTRICAL ROOM WALL
N.T.S.

KEYED NOTES:

1. REMOVE AND REPLACE CEILING TILES AS REQUIRED FOR INSTALLATION OF NEW CONDUIT. REPLACE ANY DAMAGED OR WORN OUT TILES WITH MATCHING NEW ONES.

GENERAL NOTE:

1. RUN ALL CONDUIT ABOVE CEILINGS. CONTRACTOR TO FIELD VERIFY PROPOSED CONDUIT ROUTING PRIOR TO BID.

REV #	DATE	REMARKS:	ISSUE #	DATE	ISSUED FOR:
			1	9/2/21	BID

⅛" ¼" ½" 0 1" 2"
REFERENCE SCALE

UNAUTHORIZED ALTERATION OR ADDITION TO A PLAN BEARING A LICENSED PROFESSIONAL ENGINEER'S SEAL IS A VIOLATION OF SECTION 7209, SUB-DIVISION 2 OF THE N.Y. STATE EDUCATION LAW.

FELLENZER ENGINEERING LLP
www.fellp.com
22 Mulberry St., Suite 2A, Middletown, NY 10940
t 845-343-1481 fx 845-343-4986
181 Church St., Suite 100, Poughkeepsie, NY 12601
t 845-454-9704 fx 855-320-8735

STAMP:

PROJECT TITLE:
OCCC SHEPARD STUDENT CENTER CHILLER REPLACEMENT
115 SOUTH STREET, MIDDLETOWN, NY 10940

DRAWING TITLE:
PARTIAL BASEMENT ELECTRICAL DISTRIBUTION PLAN

DESIGNED BY:	DRAWN BY:	APPROVED BY PM:	APPROVED BY PIC:	DRAWING #:
JDD	WPB	EDF	EDF	MEP-102
DATE: 09/02/2021	SCALE: AS SHOWN		FE PROJECT #: 20-357	PAGE 5 OF 8

File Name: F:\2020\20-357 SUNY ORANGE CHILLER REPLACEMENT\MEP-102.dwg (Layout: MEP-102)
Date: Mon, Aug 30, 2021 - 4:06 PM (Name: wpb)