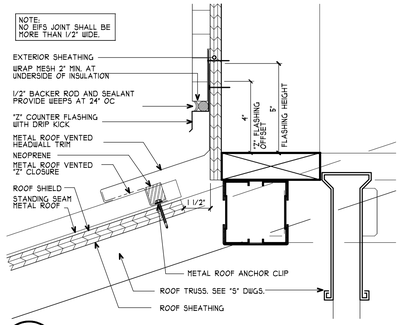

11 / A105 ENDWALL DETAIL
SCALE: 3" = 1'-0" 8 & 9/A105

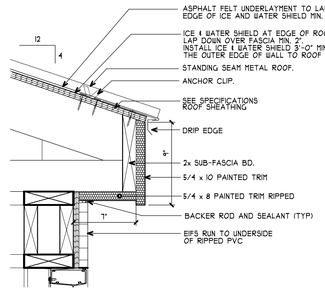

10 / A105 SECTION: EAVE AT CUPOLA
SCALE: 1 1/2" = 1'-0" 8 & 9/A105

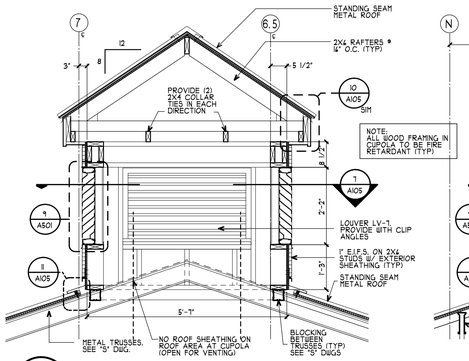

9 / A105 CUPOLA SECTION
SCALE: 1/2" = 1'-0" 1/A104

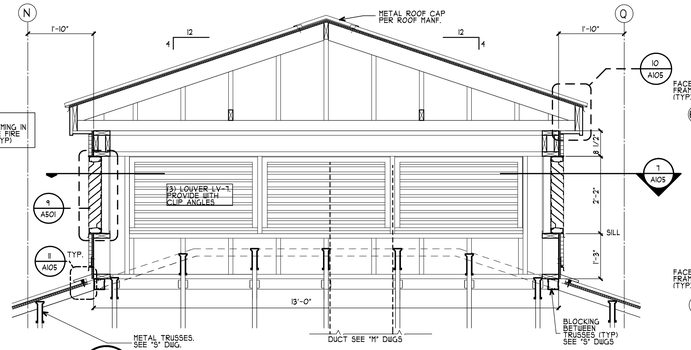

8 / A105 CUPOLA SECTION
SCALE: 1/2" = 1'-0" 1/A104

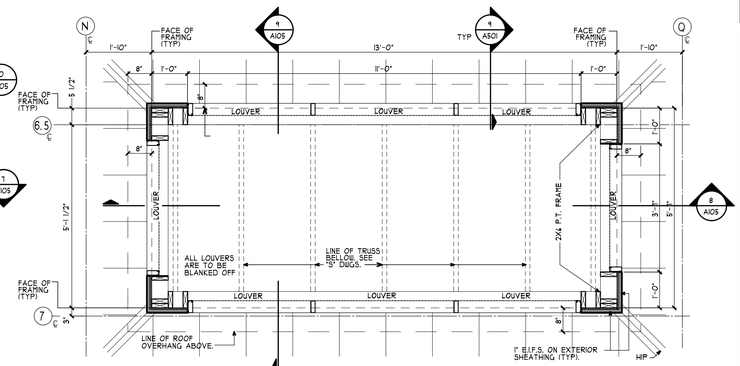

7 / A105 CUPOLA PLAN
SCALE: 1/2" = 1'-0" 8/A105

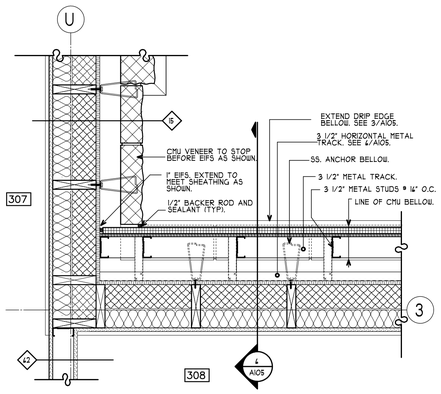

5 / A105 GABLE END WALL PLAN DETAIL
SCALE: 1" = 1'-0" 6/A105

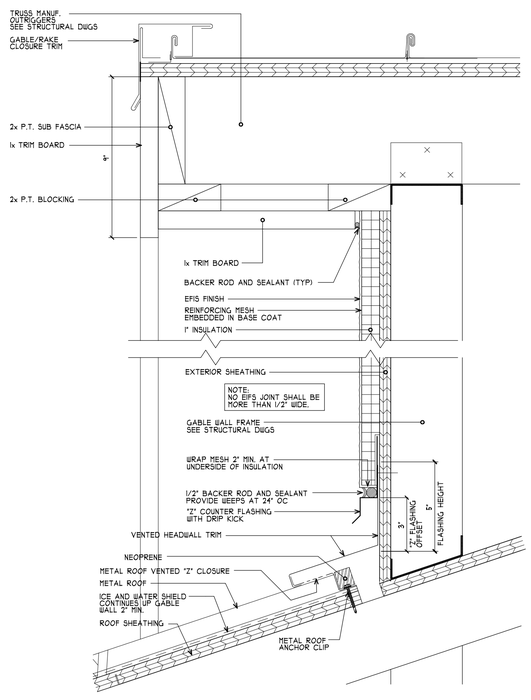

4 / A105 GABLE END DETAIL
SCALE: 3" = 1'-0" 1/A410

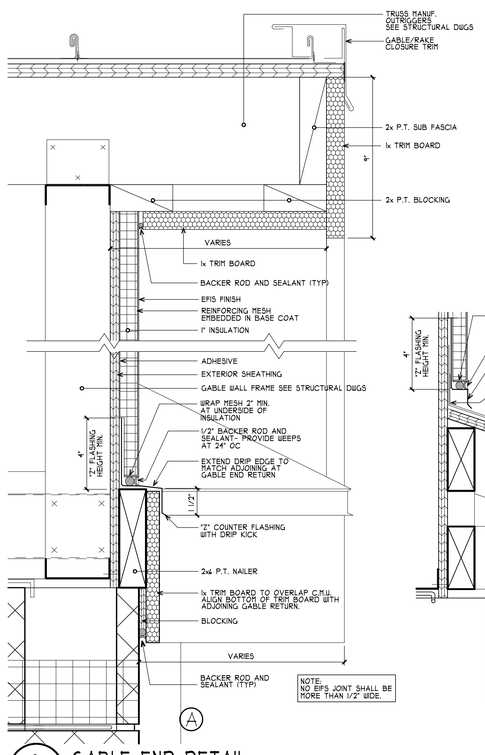

3 / A105 GABLE END DETAIL
SCALE: 3" = 1'-0" 4/A410

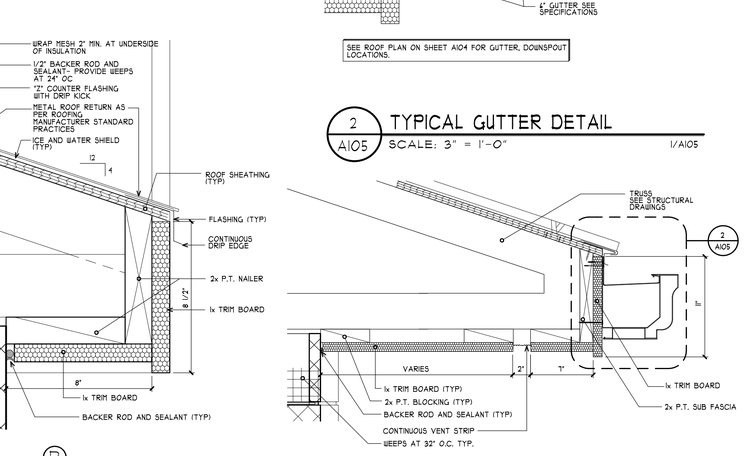

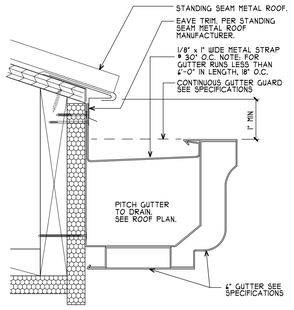

2 / A105 TYPICAL GUTTER DETAIL
SCALE: 3" = 1'-0" 1/A105

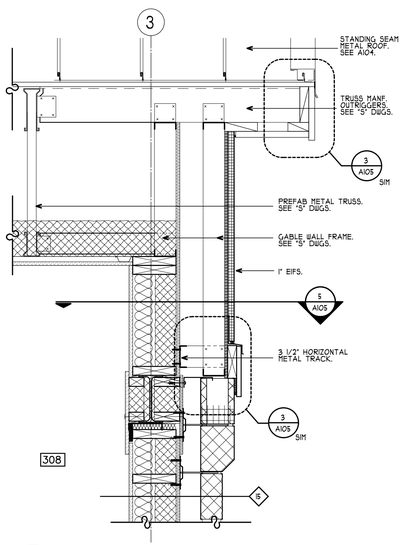

6 / A105 GABLE END WALL SECTION
SCALE: 1" = 1'-0" 1/A104

1 / A105 TYPICAL EAVE DETAIL
SCALE: 1 1/2" = 1'-0"

MITCHELL ASSOCIATES ARCHITECTS PLLC
29 THACHER PARK ROAD
VOORHEESVILLE, NY 12186
(518) 765-4571 FAX (518) 765-2950
WWW.MITCHELL-ARCHITECTS.COM

EMERGENCY SERVICE

FACILITIES

CONSULTANTS:

INSITE ENGINEERING SURVEYING & LANDSCAPE ARCHITECTURE, P.C.
3 GARRETT PLACE
CARMEL, NY 10512
(845) 225-9480 FAX: (845) 225-9717

CRAIG A. MALONEY, P.E.
STRUCTURAL ENGINEERING CONSULTANT
3 BENEDICT COURT
BALLSTON SPA, NY 12020
(518) 584-9944 FAX: (518) 584-9955

GERARD ASSOCIATES
CONSULTING ENGINEERS, P.C.
MECHANICAL, PLUMBING, AND ELECTRICAL
223 MAIN STREET
GOSHEN, NY 10924
(845) 291-2112 FAX: (845) 291-1939

COPYRIGHT 2012
MITCHELL ASSOCIATES ARCHITECTS
UNAUTHORIZED ALTERATION OR ADDITION TO THIS DOCUMENT IS A VIOLATION OF LAW

NEW STATION
FOR
PUTNAM VALLEY FIRE STATION #1

OSCAWANA LAKE ROAD
PUTNAM VALLEY, NEW YORK

REVISION HISTORY

	DATE	DESCRIPTION
1		
2		
3		
4		
5		
6		
7		
8		

ROOF DETAILS

SCALE: AS NOTED
DWG. BY: JDA, JC
DWG DATE: 8/14/2020
STATUS: BID DRAWINGS

A105

PLOT TIME: 11:11AM

DWG ID#: S:\ Drive\Putnam Valley\PV_A104