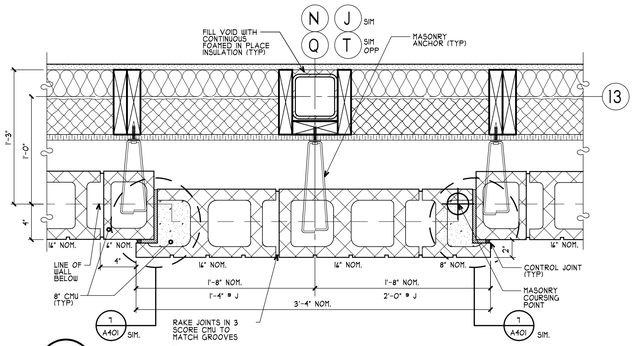

8 A402 PLAN DETAIL LEVEL 7
SCALE: 1 1/2" = 1'-0" 1/A402 & 1/A403

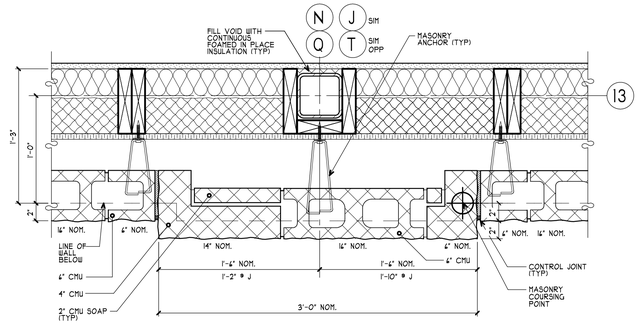

4 A402 PLAN DETAIL LEVEL 6
SCALE: 1 1/2" = 1'-0" 1/A402 & 1/A403

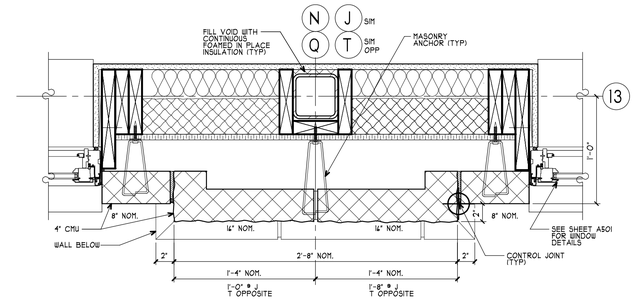

7 A402 PLAN DETAIL LEVEL 5
SCALE: 1 1/2" = 1'-0" 1/A402 & 1/A403

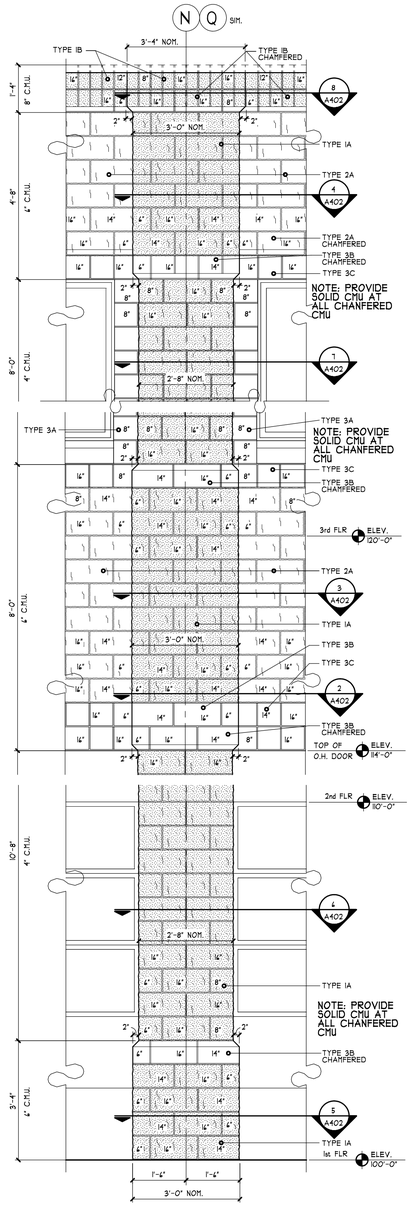

1 A402 N-12 ELEVATION
SCALE: 1/2" = 1'-0" 1/A200

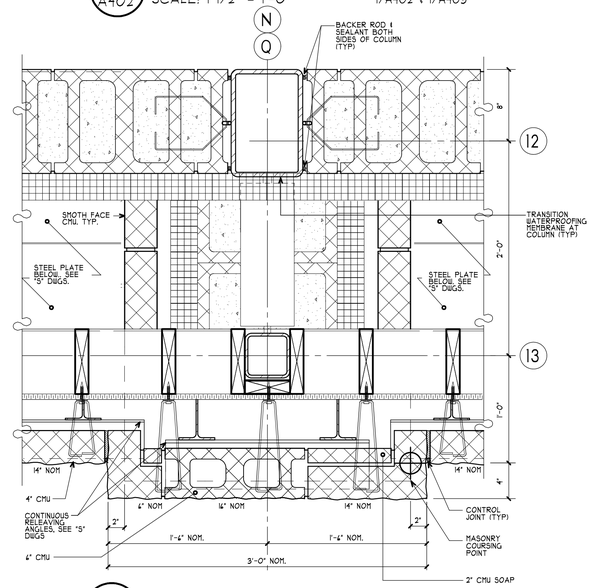

3 A402 PLAN DETAIL LEVEL 4
SCALE: 1 1/2" = 1'-0" 1/A402

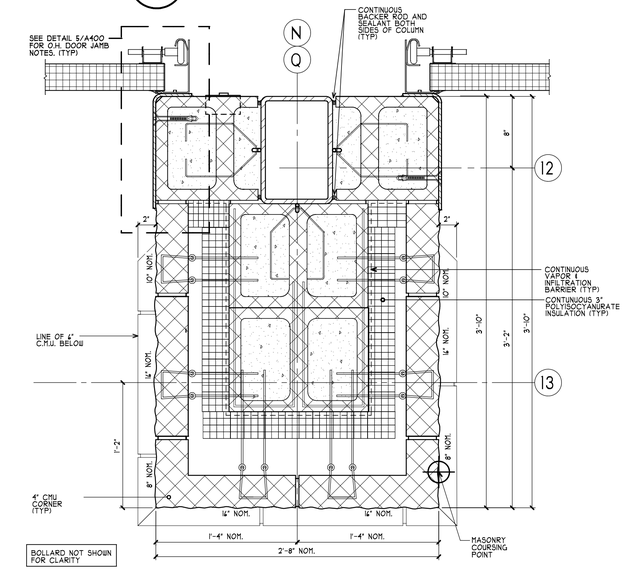

6 A402 PLAN DETAIL LEVEL 2
SCALE: 1 1/2" = 1'-0" 1/A402

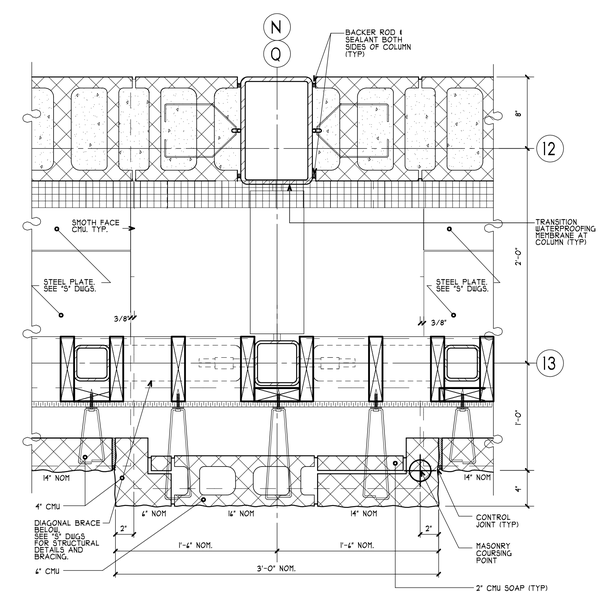

2 A402 PLAN DETAIL LEVEL 3
SCALE: 1 1/2" = 1'-0" 1/A402

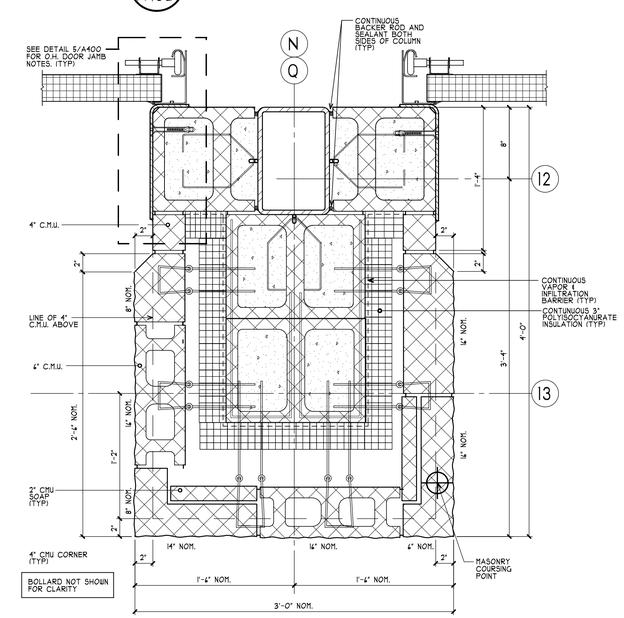

5 A402 PLAN DETAIL LEVEL 1
SCALE: 1 1/2" = 1'-0" 1/A402

MITCHELL ASSOCIATES ARCHITECTS PLLC
29 THACHER PARK ROAD
VOORHEESVILLE, NY 12186
(518) 765-4571 FAX (518) 765-2950
WWW.MITCHELL-ARCHITECTS.COM

EMERGENCY SERVICE FACILITIES

CONSULTANTS:

INSITE ENGINEERING SURVEYING & LANDSCAPE ARCHITECTURE, P.C.
3 GARRETT PLACE
CARMEL, NY 10512
(845) 225-9240 FAX: (845) 225-9717

CRAIG A. MALONEY, P.E.
STRUCTURAL ENGINEERING CONSULTANT
3 BENEDICT COURT
BALLSTON SPA, NY 12020
(518) 584-9944 FAX: (518) 584-9955

GERARD ASSOCIATES
CONSULTING ENGINEERS, P.C.
MECHANICAL, PLUMBING, AND ELECTRICAL
223 MAIN STREET
GOSHEN, NY 10924
(845) 291-1212 FAX: (845) 291-1939

COPYRIGHT 2012
MITCHELL ASSOCIATES ARCHITECTS
UNAUTHORIZED ALTERATION OR ADDITION TO THIS DOCUMENT IS A VIOLATION OF LAW

NEW STATION FOR PUTNAM VALLEY FIRE STATION #1

OSCAWANA LAKE ROAD
PUTNAM VALLEY, NEW YORK

REVISION HISTORY

	DATE	DESCRIPTION
1		
2		
3		
4		
5		
6		
7		
8		

PLAN DETAILS AND ELEVATIONS

SCALE: AS NOTED
DWG. BY:
DWG DATE: 8/14/2020
STATUS: BID DRAWINGS

A402

PLOT TIME: 1:38 PM

DWG ID#: S:\J Drive\Putnam Valley\PV_A402 Plan