WIRE & CONDUIT SCHEDULE

TAG	FEEDER SIZE	WIRING AND CONDUIT	NOTES
A	20A, 3-PHASE	(3) #12 THHN, #12 GROUND, ¾" EMT	
B	35A, 3-PHASE	(3) #8 THHN, #10 GROUND, ¾" EMT	
C	70A, 3-PHASE	(3) #6 THHN, #8 GROUND, 1" EMT	
D1	100A, 3-PHASE	(3) #3 THHN, #8 GROUND, 1¼" EMT	
D2	100A, 3-PHASE	(4) #3 THHN, #8 GROUND, 1¼" PVC UNDERGROUND	SERVICE ENTRANCE CONDUCTORS
D3	100A, 3-PHASE	(4) #3 THHN, #8 GROUND, 1¼" PVC UNDERGROUND	
E	125A, 3-PHASE	(4) #2 THHN, #6 GROUND, 1½" EMT	
F	225A, 3-PHASE	(4) #4/0 THHN, #4 GROUND, 2½" EMT	
G1	1000A, 3-PHASE	3 SETS: (4) 400mcm THHN, #2/0 GROUND, 3½" EMT	
G2	1000A, 3-PHASE	3 SETS: (4) 400mcm THHN, #2/0 GROUND, 3½" PVC UNDERGROUND	
H	1000A, 3-PHASE	3 SETS: (4) 400mcm THHN, #3/0 GROUND, 4" PVC UNDERGROUND	SERVICE ENTRANCE CONDUCTORS
J	1000A, 3-PHASE	3 SETS: (4) 400mcm THHN, 4" PVC UNDERGROUND	SERVICE ENTRANCE CONDUCTORS

SIGNAGE

PROVIDE ENGRAVED PLASTIC SIGNS, MINIMUM LETTER HEIGHT OF ¼", MOUNTED ON FACES OF ENCLOSURES AS FOLLOWS:

⅜" LETTERS
¼" LETTERS
SERVICE DISCONNECT 1 OF 2
THIS SERVICE IS SUPPLIED BY A UTILITY COMPANY SOURCE AND A 450kW STANDBY GENERATOR OPERATING AT 120/208 VOLTS, 3 PHASE, LOCATED TO THE WEST OF THE BUILDING
1

⅜" LETTERS
¼" LETTERS
SERVICE DISCONNECT 2 OF 2
THIS SERVICE IS SUPPLIED BY A UTILITY COMPANY SOURCE AND A 450kW STANDBY GENERATOR OPERATING AT 120/208 VOLTS, 3 PHASE, LOCATED TO THE WEST OF THE BUILDING
2

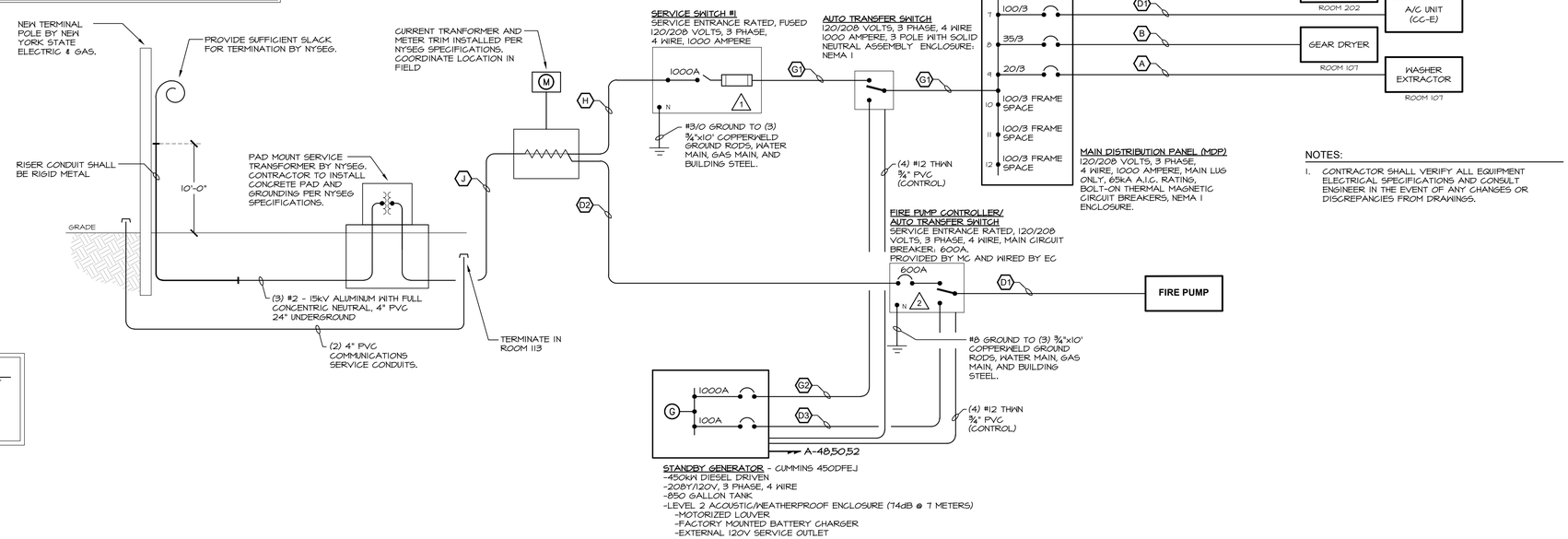

NOTES:

1. CONTRACTOR SHALL VERIFY ALL EQUIPMENT ELECTRICAL SPECIFICATIONS AND CONSULT ENGINEER IN THE EVENT OF ANY CHANGES OR DISCREPANCIES FROM DRAWINGS.

NOTE:

1. THE CONTRACTOR SHALL HAVE THE EQUIPMENT SUPPLIER PROVIDE AN ARC FAULT CURRENT STUDY FOR THE MAIN DISTRIBUTION PANEL AND ALL BRANCH CIRCUIT PANELS BASED ON THE DESIGN SHOWN ON THIS DRAWING AND ANY ADDITIONAL INFORMATION THAT MAY BE PROVIDED BY THE ENGINEER. PROVIDE ARC FAULT CURRENT AND PPE LABELS FOR ALL PANELS BASED ON STUDY.

1 E300 ELECTRICAL: POWER SCHEMATIC
NOT TO SCALE

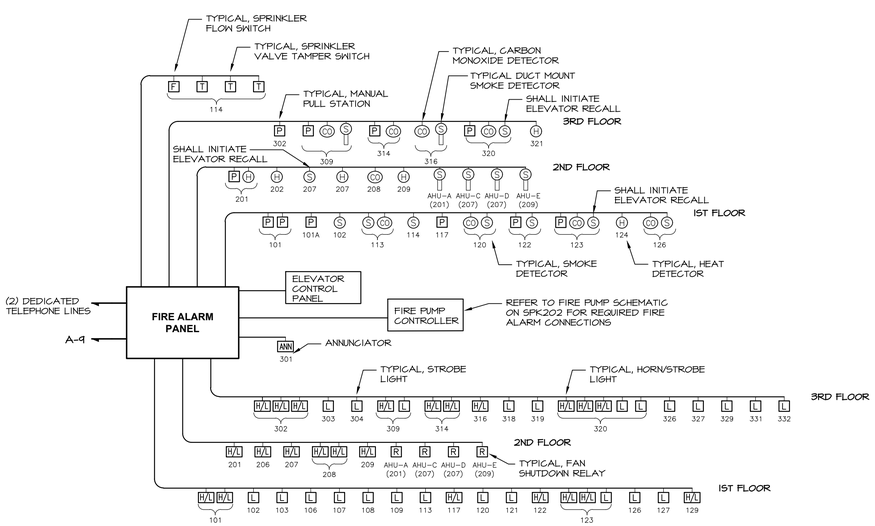

2 E300 ELECTRICAL: FIRE ALARM SCHEMATIC
NOT TO SCALE

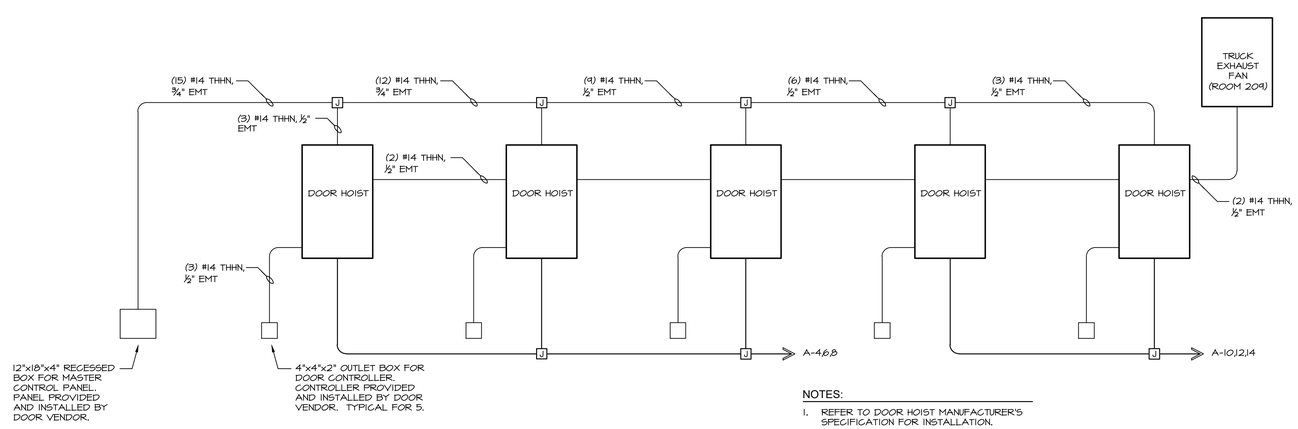

NOTES:

1. REFER TO DOOR HOIST MANUFACTURER'S SPECIFICATION FOR INSTALLATION.

3 E300 ELECTRICAL: DOOR HOIST/TRUCK EXHAUST FAN CONTROL SCHEMATIC
NOT TO SCALE

MITCHELL ASSOCIATES ARCHITECTS
29 THACHER PARK ROAD
VOORHEESVILLE, NY 12186
(518) 765-4571 FAX (518) 765-2950
WWW.MITCHELL-ARCHITECTS.COM

EMERGENCY SERVICE
FACILITIES

CONSULTANTS:

INSITE ENGINEERING SURVEYING & LANDSCAPE ARCHITECTURE, P.C.
3 GARRET PLACE
CARMEL, NY 10512
(845) 225-9090 FAX:(845) 225-9717

CRAIG A. MALONEY P.E.
STRUCTURAL ENGINEERING CONSULTANT
3 BENEDICT COURT
BALLSTON SPA, NY 12020
(518) 584-9944 FAX:(518) 584-9955

GERARD ASSOCIATES
CONSULTING ENGINEERS, P.C.
MECHANICAL, PLUMBING AND ELECTRICAL
223 MAIN STREET
GOSHEN, NY 10924
(845) 291-1272
GA09011

COPYRIGHT 2012
MITCHELL ASSOCIATES ARCHITECTS
UNAUTHORIZED ALTERATION OR ADDITION TO THIS DOCUMENT IS A VIOLATION OF LAW

NEW STATION
FOR
PUTNAM VALLEY FIRE STATION #1

OSCAWANA LAKE ROAD
PUTNAM VALLEY, NEW YORK

REVISION HISTORY

	DATE	DESCRIPTION
1		
2		
3		
4		
5		
6		
7		
8		

ELECTRICAL: DETAILS

SCALE: AS NOTED
DWG. BY: KC
DWG. DATE: 8/14/2020
STATUS: BID DRAWINGS

E300