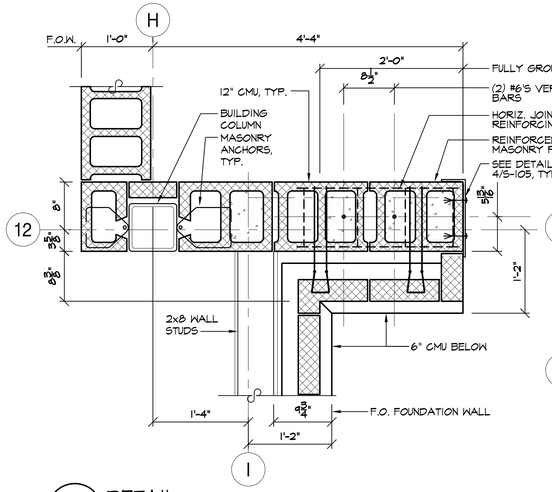

9 DETAIL
S-105 SCALE: 1" = 1'-0"

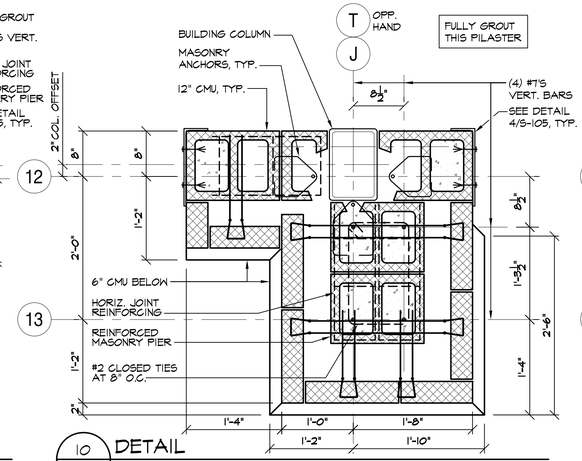

10 DETAIL
S-105 SCALE: 1" = 1'-0"

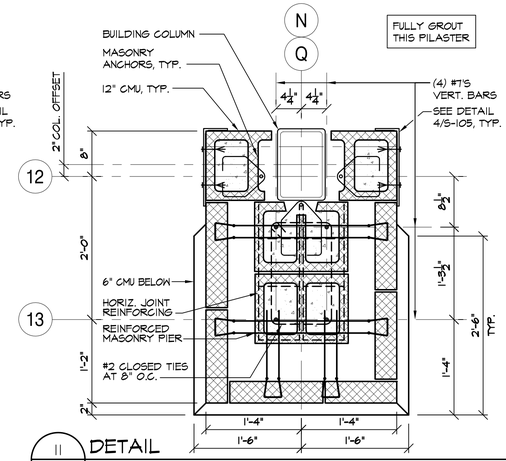

11 DETAIL
S-105 SCALE: 1" = 1'-0"

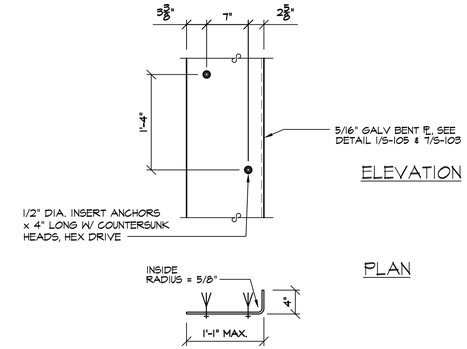

12 DETAIL - PILASTER JAMB PLATE
S-105 SCALE: 1" = 1'-0"

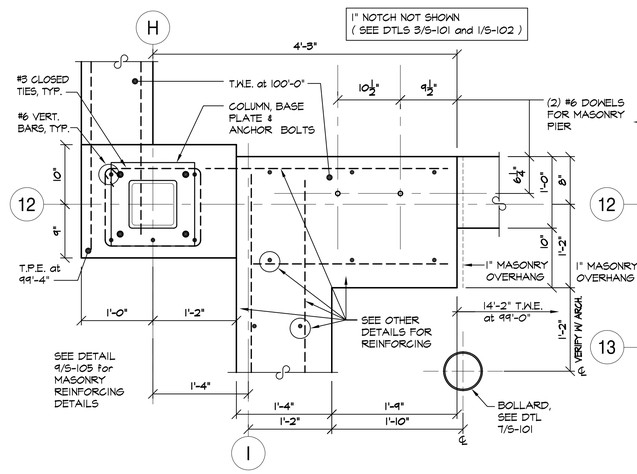

5 DETAIL
S-105 SCALE: 1" = 1'-0"
NOTE: o = MASONRY DOWEL, SEE DETAIL 2/S-101

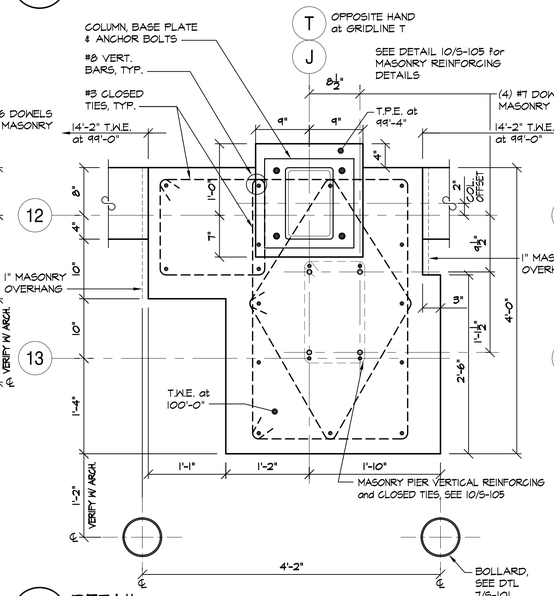

6 DETAIL
S-105 SCALE: 1" = 1'-0"
NOTE: o = MASONRY DOWEL, SEE DETAIL 2/S-101

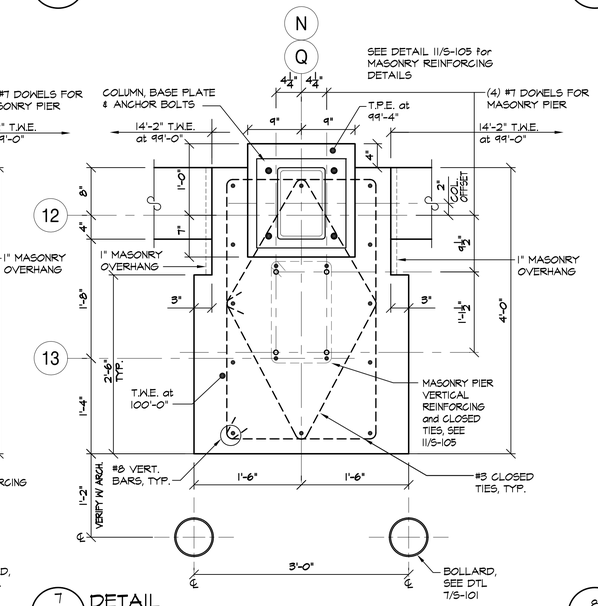

7 DETAIL
S-105 SCALE: 1" = 1'-0"
NOTE: o = MASONRY DOWEL, SEE DETAIL 2/S-101

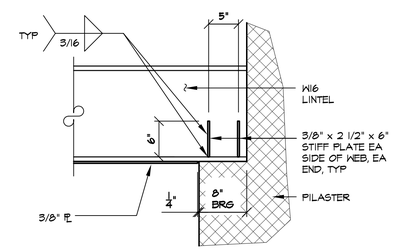

8 SECTION - O.H. DOOR LINTEL
S-105 SCALE: 1" = 1'-0"

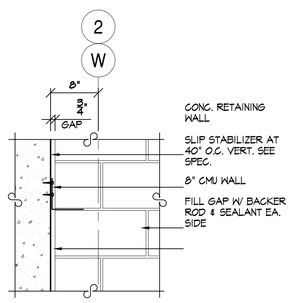

1 DETAIL - MOVEMENT JOINT
S-105 SCALE: 1" = 1'-0"

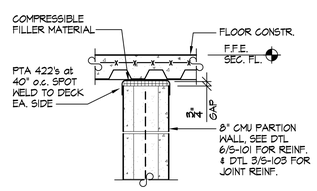

2 TYPICAL DETAIL - PARTITION TOP ANCHOR
S-105 SCALE: 1" = 1'-0"

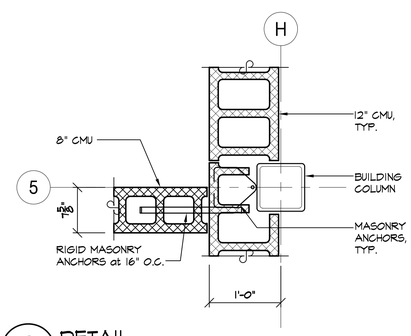

3 DETAIL
S-105 SCALE: 1" = 1'-0"

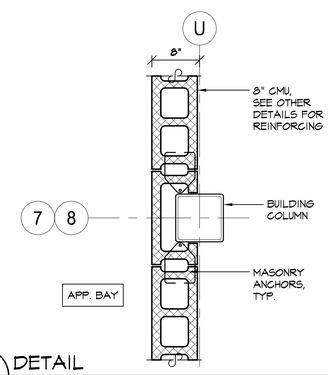

4 DETAIL
S-105 SCALE: 1" = 1'-0"

MITCHELL ASSOCIATES ARCHITECTS
29 THACHER PARK ROAD
VOORHEESVILLE, NY 12186
(518) 765-4571 FAX (518) 765-2950
WWW.MITCHELL-ARCHITECTS.COM

EMERGENCY SERVICE FACILITIES

CONSULTANTS:

INSITE ENGINEERING SURVEYING & LANDSCAPE ARCHITECTURE, P.C.
CIVIL ENGINEERS

CRAIG A. MALONEY
STRUCTURAL ENGINEERING CONSULTANT

GERARD ASSOCIATES CONSULTING ENGINEERS, P.C.
MECHANICAL, PLUMBING AND ELECTRICAL

COPYRIGHT 2020
MITCHELL ASSOCIATES ARCHITECTS
UNAUTHORIZED ALTERATION OR ADDITION TO THIS DOCUMENT IS A VIOLATION OF LAW

NEW STATION

PUTNAM VALLEY FIRE STATION #1

OSCAWANA LAKE ROAD
PUTNAM VALLEY, NEW YORK

	DATE	DESCRIPTION
1		
2		
3		
4		
5		
6		
7		
8		

STATUS: FOR BIDDING

CONCRETE & MASONRY PIER DETAILS

SCALE: AS NOTED
DWG. BY: JC/CAM
DWG DATE: 08/14/2020
DWG ID#:

S-105