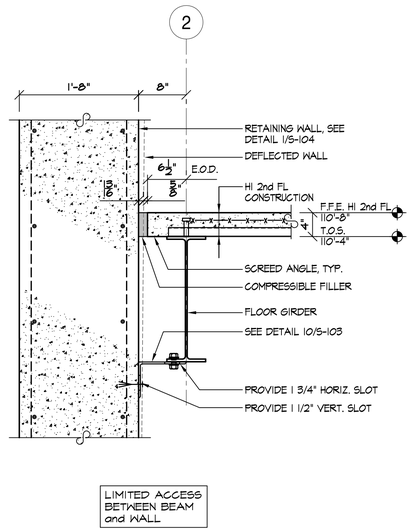


11 S-202 SECTION - HI SECOND FL FRAMING
SCALE: 1" = 1'-0"

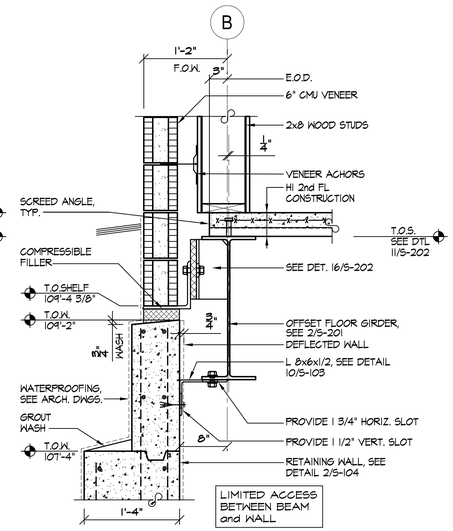


12 S-202 SECTION - HI SECOND FL FRAMING
SCALE: 1" = 1'-0"

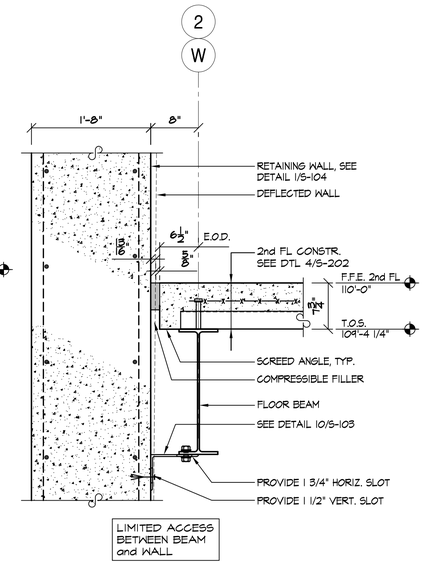


13 S-202 SECTION - SECOND FL FRAMING
SCALE: 1" = 1'-0"

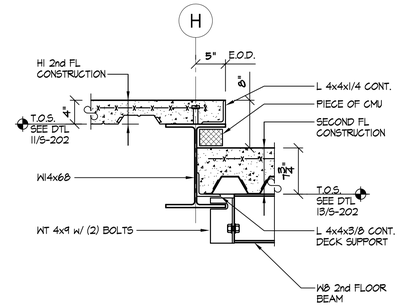


14 S-202 SECTION - SECOND FL FRAMING
SCALE: 1" = 1'-0"

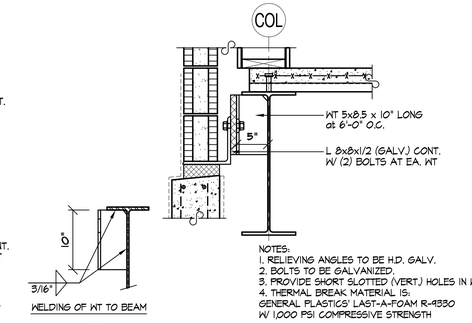


16 S-202 VENEER SHELF ANGLE
SCALE: 1" = 1'-0"

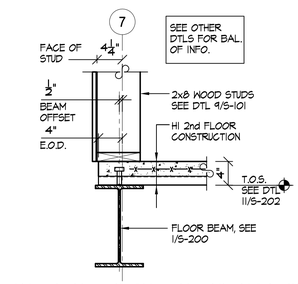


15 S-202 SECTION - HI SECOND FL FRAMING
SCALE: 1" = 1'-0"

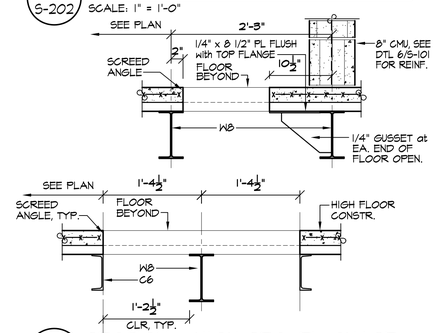


17 S-202 SECTION - HIGH SEC. FL CHASE
SCALE: 1" = 1'-0"

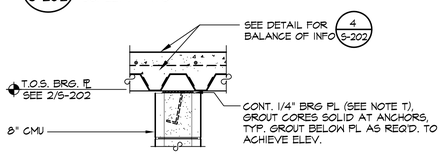


7A S-202 SECTION - SECOND FL FRAMING
SCALE: 1" = 1'-0"

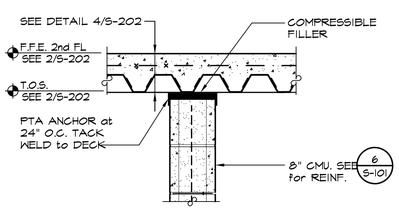


6 S-202 SECTION - SECOND FL FRAMING
SCALE: 1" = 1'-0"

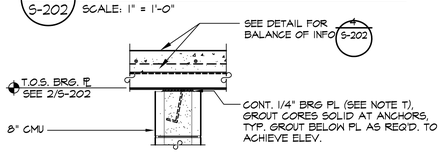


7B S-202 SECTION - SECOND FL FRAMING
SCALE: 1" = 1'-0"

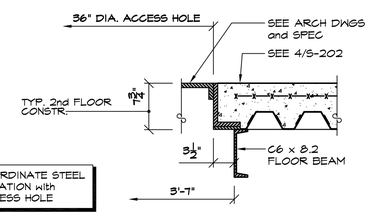


8 S-202 SECTION - SECOND FL FRAMING
SCALE: 1" = 1'-0"

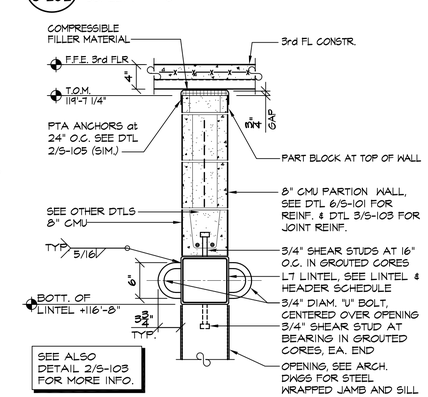


9 S-202 SECTION - TRAINING DEVICE
SCALE: 1" = 1'-0"

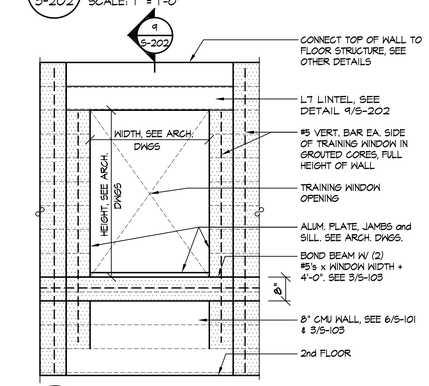


10 S-202 ELEVATION - TRAINING WALL
SCALE: 1/2" = 1'-0"

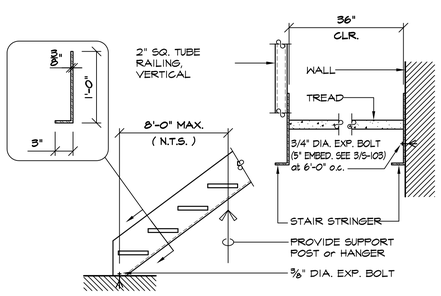


1 S-202 SECTION - STAIR STRINGER
SCALE: 1" = 1'-0"

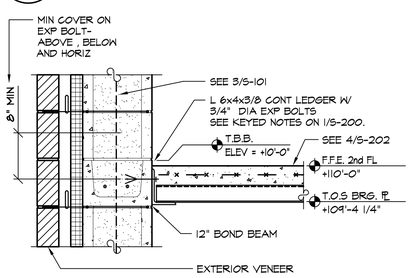


2 S-202 SECTION - SECOND FL FRAMING
SCALE: 1" = 1'-0"

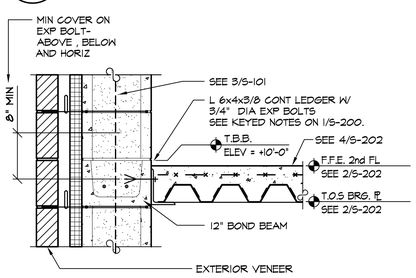


3 S-202 SECTION - SECOND FL FRAMING
SCALE: 1" = 1'-0"

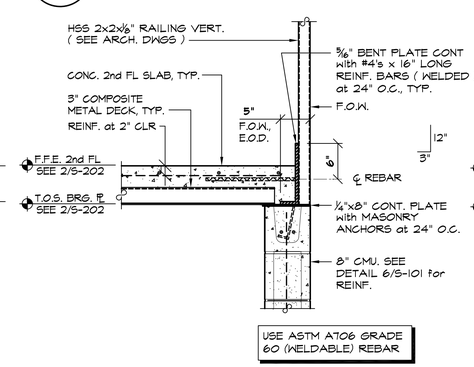


4 S-202 SECTION - SECOND FL FRAMING
SCALE: 1" = 1'-0"

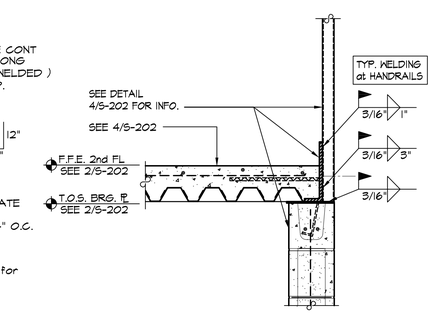


5 S-202 SECTION - SECOND FL FRAMING
SCALE: 1" = 1'-0"


MITCHELL ASSOCIATES ARCHITECTS
29 THACHER PARK ROAD
VOORHEESVILLE, NY 12186
(518) 765-4571 FAX (518) 765-2950
WWW.MITCHELL-ARCHITECTS.COM


EMERGENCY SERVICE FACILITIES

CONSULTANTS:

INSITE ENGINEERING SURVEYING & LANDSCAPE ARCHITECTURE, P.C.
CIVIL ENGINEERS

CRAIG A. MALONEY
STRUCTURAL ENGINEERING CONSULTANT

GERARD ASSOCIATES CONSULTING ENGINEERS, P.C.
MECHANICAL, PLUMBING AND ELECTRICAL


COPYRIGHT 2020
MITCHELL ASSOCIATES ARCHITECTS
UNAUTHORIZED ALTERATION OR ADDITION TO THIS DOCUMENT IS A VIOLATION OF LAW


NEW STATION

# PUTNAM VALLEY FIRE STATION #1

OSCAWANA LAKE ROAD
PUTNAM VALLEY, NEW YORK

| | DATE | DESCRIPTION |
|---|---|---|
| 1 | | |
| 2 | | |
| 3 | | |
| 4 | | |
| 5 | | |
| 6 | | |
| 7 | | |
| 8 | | |

STATUS: FOR BIDDING

2nd FLOOR
SECTIONS & DETAILS

SCALE: AS NOTED
DWG. BY: JC/CAM
DWG DATE: 08/14/2020
DWG ID#:

S-202