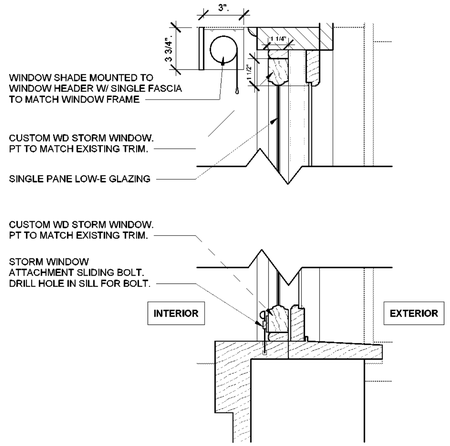

1 FIRST FLOOR STORM WINDOW SILL/HEADER
3" = 1'-0"

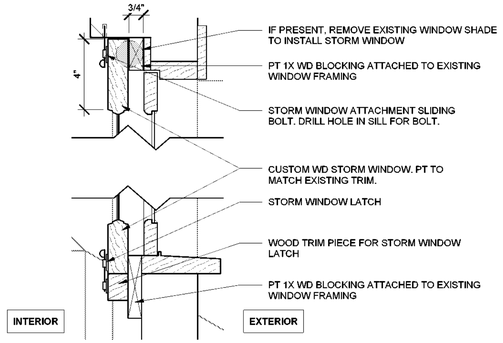

NOTE: INSTALL BLOCKING WHERE REQUIRED TO AVOID WINDOW HINGES AND LATCHES

2 DORMER STORM WINDOW HEADER/SILL DETAIL
3" = 1'-0"

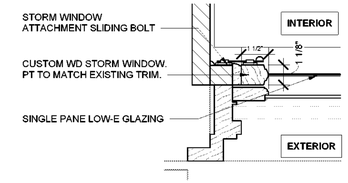

3 FIRST FLOOR STORM WINDOW JAMB
3" = 1'-0"

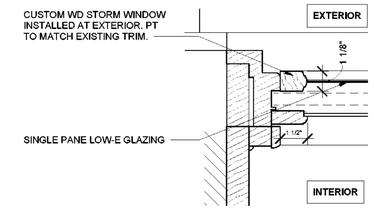

4 STAIR EXTERIOR STORM WINDOW JAMB
3" = 1'-0"

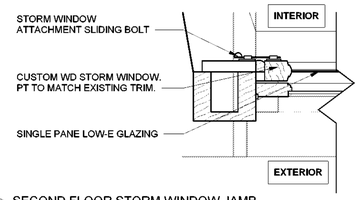

5 SECOND FLOOR STORM WINDOW JAMB
3" = 1'-0"

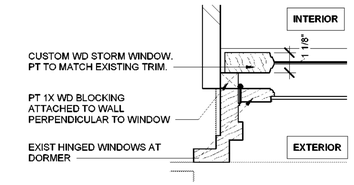

6 DORMER STORM WINDOW JAMB
3" = 1'-0"

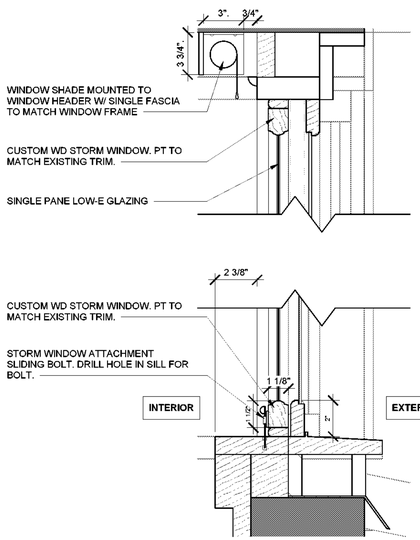

7 SECOND FLOOR STORM WINDOW SILL/HEADER
3" = 1'-0"

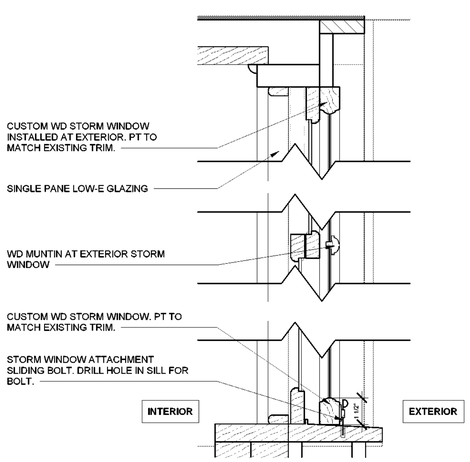

8 STAIR WINDOW EXTERIOR STORM WINDOW SILL, MUNTIN, HEADER
3" = 1'-0"

Window Schedule

Mark	Width	Height	Sill	Jamb	Head	Storm Windows	Shutters	Comments
01	4' - 7"	6' - 8"	1 / A800	3 / A800	1 / A800	INTERIOR	REPLACE MISSING RIGHT SHUTTER DOG, REATTACH IRON HANDLE ON LEFT SHUTTER.	
02	4' - 7"	6' - 8"	1 / A800	3 / A800	1 / A800	INTERIOR		
03	4' - 8"	6' - 8"	1 / A800	3 / A800	1 / A800	INTERIOR		
04	4' - 8"	6' - 8"	1 / A800	3 / A800	1 / A800	INTERIOR		
05	4' - 8"	6' - 8"	1 / A800	3 / A800	1 / A800	INTERIOR		
06	4' - 8"	6' - 8"	1 / A800	3 / A800	1 / A800	INTERIOR		
07	4' - 4"	6' - 8"	7 / A800	5 / A800	7 / A800	INTERIOR		
08	4' - 4"	6' - 8"	7 / A800	5 / A800	7 / A800	INTERIOR		
09	4' - 4"	6' - 8"	7 / A800	5 / A800	7 / A800	INTERIOR		
10	4' - 7"	6' - 2"	7 / A800	5 / A800	7 / A800	INTERIOR		
11	4' - 7"	6' - 2"	7 / A800	5 / A800	7 / A800	INTERIOR		
12	4' - 7"	6' - 2"	7 / A800	5 / A800	7 / A800	INTERIOR		
13	4' - 7"	6' - 2"	7 / A800	5 / A800	7 / A800	INTERIOR		
14	4' - 7"	6' - 2"	7 / A800	5 / A800	7 / A800	INTERIOR		
15	4' - 2"	6' - 8"	1 / A800	3 / A800	1 / A800	INTERIOR	REPLACE DAMAGED "H" HINGE AND RE-HANG.	
16	4' - 3"	6' - 8"	1 / A800	3 / A800	1 / A800	INTERIOR		
17	4' - 7"	6' - 8"	1 / A800	3 / A800	1 / A800	INTERIOR		
18	4' - 7"	6' - 8"	1 / A800	3 / A800	1 / A800	INTERIOR		
19	4' - 3"	6' - 8"	7 / A800	5 / A800	7 / A800	INTERIOR		
20	4' - 3"	6' - 8"	7 / A800	5 / A800	7 / A800	INTERIOR		
21	4' - 3"	6' - 8"	7 / A800	5 / A800	7 / A800	INTERIOR		
22	4' - 4"	6' - 8"	7 / A800	5 / A800	7 / A800	INTERIOR		
23	4' - 4"	6' - 8"	7 / A800	5 / A800	7 / A800	INTERIOR		
24	4' - 0"	6' - 8"	1 / A800	3 / A800	1 / A800	INTERIOR		
25	4' - 0"	6' - 8"	1 / A800	3 / A800	1 / A800	INTERIOR	LEFT SHUTTER – DISASSEMBLE AND REGLUE ALL JOINTS. REHANG RIGHT SHUTTER (STORED IN BASEMENT), REUSE EXISTING "H" HINGES.	
26	4' - 3"	6' - 8"	7 / A800	5 / A800	7 / A800	INTERIOR		
27	4' - 3"	6' - 8"	7 / A800	5 / A800	7 / A800	INTERIOR		
28	4' - 8"	6' - 8"	1 / A800	3 / A800	1 / A800	INTERIOR		
29	4' - 9"	6' - 8"	1 / A800	3 / A800	1 / A800	INTERIOR		
30	4' - 10"	6' - 8"	1 / A800	3 / A800	1 / A800	INTERIOR	REPLACE RIGHT SHUTTER DOG. RETURN RIGHT SHUTTER TO PARKS.	
31	4' - 10"	6' - 8"	1 / A800	3 / A800	1 / A800	INTERIOR	REMOVE SHUTTERS AND HARDWARE & TURN OVER TO PARKS.	
32	4' - 7"	6' - 2"	7 / A800	5 / A800	7 / A800	INTERIOR		
33	4' - 7"	6' - 2"	7 / A800	5 / A800	7 / A800	INTERIOR		EPOXY FILLER AND CONSOLIDATION ON SILL.
34	4' - 7"	6' - 2"	7 / A800	5 / A800	7 / A800	INTERIOR	RIGHT SHUTTER - REMOVE SHUTTER AND HARDWARE & TURN OVER TO PARKS.	
35	4' - 7"	6' - 2"	——	——	——	INTERIOR	DISMANTLE, SAVE ALL SASH, SHUTTERS, TRIM, HARDWARE & TURN OVER TO PARKS.	
36	3' - 4"	6' - 0"	8 / A800	4 / A800	8 / A800	EXTERIOR		
37	3' - 4"	6' - 0"	8 / A800	4 / A800	8 / A800	EXTERIOR		DUTCHMAN REPAIR ON LOWER LEFT OF BOTTOM SASH.
38	4' - 2"	6' - 8"	1 / A800	3 / A800	1 / A800	INTERIOR		MASONRY – REPOINT ABOVE WINDOW OPENING
39	4' - 2"	6' - 8"	1 / A800	3 / A800	1 / A800	INTERIOR	MINOR EPOXY FILLER AND CONSOLIDATION ON RIGHT SHUTTER.	
D1	3' - 5"	3' - 0"	2 / A800	6 / A800	2 / A800	INTERIOR		REMAIN UNDISTURBED
D2	3' - 5"	3' - 0"	2 / A800	6 / A800	2 / A800	INTERIOR		REMAIN UNDISTURBED
D3	3' - 5"	3' - 0"	2 / A800	6 / A800	2 / A800	INTERIOR		
D4	3' - 5"	3' - 0"	2 / A800	6 / A800	2 / A800	INTERIOR		
D5	3' - 5"	3' - 0"	2 / A800	6 / A800	2 / A800	INTERIOR		REPLACE BOTTOM MOLDING ON LEFT SASH, 50% GLAZING PUTTY REPLACEMENT BOTH SASH
D6	3' - 5"	3' - 0"	2 / A800	6 / A800	2 / A800	INTERIOR		
D7	3' - 5"	3' - 0"	2 / A800	6 / A800	2 / A800	INTERIOR		
D8	3' - 5"	3' - 0"	2 / A800	6 / A800	2 / A800	INTERIOR		RIGHT SASH IS PAINTED SHUT. LEFT HINGE IS LOOSE (REATTACH). 50% GLAZING PUTTY REPLACEMENT BOTH SASH.
D9	3' - 5"	3' - 0"	2 / A800	6 / A800	2 / A800	INTERIOR		REMAIN UNDISTURBED
D10	3' - 5"	3' - 0"	2 / A800	6 / A800	2 / A800	INTERIOR		
D11	3' - 5"	3' - 0"	2 / A800	6 / A800	2 / A800	INTERIOR		REMAIN UNDISTURBED

GENERAL NOTES:
1. LIGHT FILTERING SHADES TO BE INSTALLED ON ALL EXISTING WINDOWS.
2. RETAIN PARTIAL WEATHERSTRIPPING ON ALL DORMER WINDOWS.
3. ASSUME 10% GLAZING PUTTY REPLACEMENT ON EAST, NORTH AND UNDER THE WEST PORCH. ASSUME 25% GLAZING PUTTY REPLACEMENT ABOVE THE WEST PORCH AND ALL OF SOUTH WINDOWS.
4. HARDWARE: SEE SPECS. NEW HARDWARE TO BE CUSTOM WROUGHT STEEL. ALL WOOD SCREWS TO BE FLAT-HEAD SLOTTED, NOT PHILIPS HEAD.

NEW YORK STATE OF OPPORTUNITY. Parks, Recreation and Historic Preservation

Governor Andrew M. Cuomo — Commissioner Erik Kulleseid

IT IS A VIOLATION OF STATE EDUCATION LAW FOR ANY PERSON, UNLESS UNDER THE DIRECTION OF A LICENSED ARCHITECT/ENGINEER TO ALTER THIS DOCUMENT IN ANY WAY. ALTERATIONS MUST HAVE THE SEAL AFFIXED ALONG WITH A DESCRIPTION OF THE ALTERATIONS, DATE AND ARCHITECT/ENGINEER'S SIGNATURE COPYRIGHT © 2021

Architect:
Saratoga Associates
21 Congress Street, Suite 201
Saratoga Springs, NY 12866
SARATOGA ASSOCIATES
Landscape Architects, Architects, Engineers, and Planners, P.C.

Engineer:
Barton and Loguidice
443 Electronics Parkway
Liverpool, NY 13088
Barton & Loguidice

Exhibit Designer:
AMAZE DESIGN
PO Box 51905
Boston, MA 02205-9761
amaze DESIGN

NYS OPRHP Taconic Region
9 Old Post Rd, PO Box 308
Staatsburg, New York 12580
(845) 889-4100
Regional Director: Linda Cooper
District Manager: Garrett Jobson

Project Title:
Philipse Manor Hall State Historic Site
Construction of Elevator/Restroom Addition, Interior and Exterior Rehabilitation and Site Enhancements

Project Location:
29 Warburton Ave, Yonkers, NY 10701

Key Plan

REVISIONS

Rev No.	Description	Date:

Drawn By: *ACM*
Design By: *EDW*
Checked By: *CTS*
Approved By: *DFM*
Date: *5/28/2021*

Seal and Signature
REGISTERED ARCHITECT DONALD F. MINKEY 015174 THE STATE OF NEW YORK

Sheet Title:
MANOR WINDOW SCHEDULE AND DETAILS

Bid Documents

Drawing Number:
A800

Project Number: *18006.47*
Sheet:

6/4/2021 8:19:16 AM