DOMESTIC HOT WATER HEAT EXCHANGER SCHEDULE

TAG	MANUFACTURER	MODEL	BOILER WATER CIRCUIT IN DEG. F	BOILER WATER CIRCUIT OUT DEG. F	DOMESTIC HW CIRCUIT IN DEG. F	DOMESTIC HW CIRCUIT OUT DEG. F	MINIMUM OVERALL EFF. %	NOTES
HX-1A & HX-1B	PATTERSON-KELLY	DURATION III	160	110	50	125	93	SEE NOTES

DOMESTIC HOT WATER HEAT EXCHANGER NOTES:

1. DOUBLE WALL BRAZED PLATE HEAT EXCHANGER WITH ASME SECTION VH1-DIV.1 "U" STAMP.
2. 93% MINIMUM EFFICIENCY AS CERTIFIED BY BOILER MANUFACTURER. BOILER TO BE CONDENSING AT ALL TIMES. RETURN TEMPERATURE NOT TO EXCEED 140 DEGREES.
3. PACKAGED FACTORY FABRICATED HEAT EXCHANGE SKID TO INCLUDE: CONTINUOUS INTERFACE WITH BOILER DOMESTIC PRIORITY CONTROLS, TEMPERATURE CONTROL, AND HIGH LIMIT CONTROL.
4. PLATES SHALL BE 316 STAINLESS STEEL PLATES WITH COOPER BRAZING.

1750

SEWAGE EJECTOR PUMP SCHEDULE

"ZOELLER" AS STANDARD OR APPROVED EQUAL

UNIT NO.	LOCATION	PUMP DATA NO.	GPM	T.D.H. (FT.)	SOLIDS (IN.)	DISCHARGE (IN.)	H.P.	VOLT/ø	AMPS	MODEL	REMARKS
SEP-1	MAINTENANCE SHOP	2	310	30	2 1/2	4	5	480/3	7.6	G-6124	25 FT. CORD

NOTES:

1. FURNISH WITH #33-XXXX 66"x72" O.D. FIBERGLASS BASIN AS PART OF PREPACKAGED INDOOR DUPLEX SEWAGE PUMP SYSTEM.
2. PROVIDE #10-1110X DUPLEX CONTROL PANEL.
3. PROVIDE 4pc. #10-1881 VARIABLE LEVEL FLOAT SWITCH AND 1pc. #10-0253 FLOAT BRACKET.

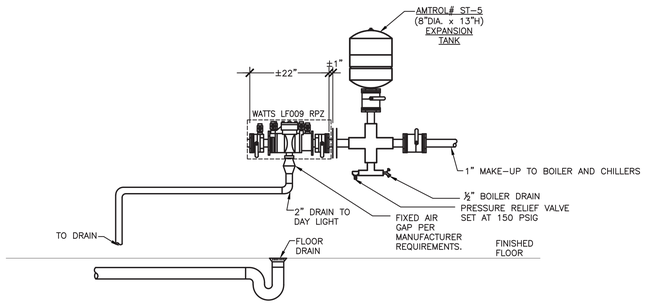

NOTES:

1. PROVIDE 18" MINIMUM BETWEEN BOTTOM OF RELIEF VALVE AND FLOOR.
2. PROVIDE 12" MINIMUM CLEAR SPACE ABOVE ASSEMBLY TO ALLOW FOR SERVICING OF CHECK VALVE.
3. PROVIDE A MINIMUM OF 30" CLEAR SPACE BETWEEN THE FRONT SIDE OF ALL BFP AND NEAREST WALL OR OBSTRUCTION.
4. PROVIDE 12" CLEARANCE FROM BACK SIDE OF DEVICE TO NEAREST WALL.

1 1" MAKE-UP WATER PIPING FOR BOILER AND CHILLER LOOPS WITH RPZ BACKFLOW PREVENTER

N.T.S.

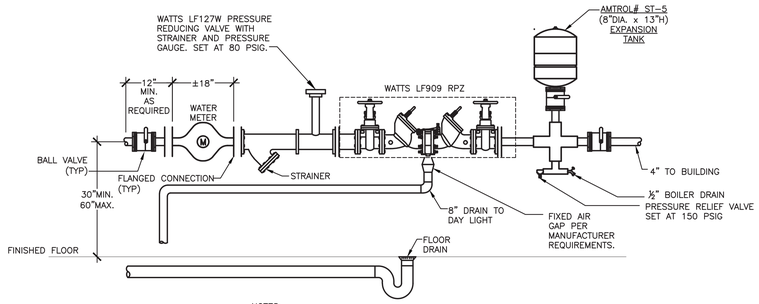

NOTES:

1. PROVIDE 18" MINIMUM BETWEEN BOTTOM OF RELIEF VALVE AND FLOOR.
2. PROVIDE 12" MINIMUM CLEAR SPACE ABOVE ASSEMBLY TO ALLOW FOR SERVICING OF CHECK VALVE.
3. PROVIDE A MINIMUM OF 30" CLEAR SPACE BETWEEN THE FRONT SIDE OF ALL BFP AND NEAREST WALL OR OBSTRUCTION.
4. PROVIDE 12" CLEARANCE FROM BACK SIDE OF DEVICE TO NEAREST WALL.

2 4" WATER SERVICE WITH RPZ BACKFLOW PREVENTER

N.T.S.

SCHEDULE OF PLUMBING EQUIPMENT

SYMBOL	MFTR.	MODEL	DESCRIPTION
WC-1	KOHLER	K-4302	FLOOR MOUNT WATER CLOSET, ELONGATED BOWL, 1 1/2" TOP SPUD, WHITE VITREOUS CHINA, 1.6 GPF. SEAT TO BE KOHLER MODEL #K-4666-CA, SOLID POLYPROPYLENE PLASTIC, ELONGATED, OPEN FROM WITH CHECK HINGE, ANTI-MICROBIAL AGENT, LESS COVER. USE WITH SLOAN FLUSHOMETER MODEL #8111-1.6/1.1.
WC-2	KOHLER	K-4302	SAME AS "WC-1" ABOVE, EXCEPT INSTALL PER ADA REQUIREMENTS.
WC-3	GERBER	21-818	"AVALANCHE" ERGOHEIGHT FLOOR MOUNT WATER CLOSET, ELONGATED BOWL, WHITE VITREOUS CHINA, 1.6 GPF, ADA COMPLIANT, COLOR TO BE WHITE.
U-1	KOLHER	K-4960-ET	"BARDON SUPERIOR" URINAL, VITREOUS CHINA, 1.0 GPF, WASHOUT FLUSH ACTION, ADA COMPLIANT. COLOR TO BE WHITE. USE WITH SLOAN ROYAL FLUSH VALVE MODEL # 186-1(TOP SPUD).
U-2	KOLHER	K-4960-ET	SAME AS "U-1" ABOVE EXCEPT INSTALL PER ADAD REQUIREMENTS.
LV-1	GERBER	–	"MONTICELLO II" BACKSPLASH, WALL HUNG LAVATORY, 20" X 18" VITREOUS CHINA, COLOR TO BE WHITE. ADA COMPLIANT. USE WITH MOEN LAVATORY FAUCET MODEL #L4621.
LV-2	KOLHER	K-2195	"PENNINGTON" LAVATORY, VITREOUS CHINA 20 1/4" X 17 1/4" SELF-RIMMING, 4" CENTERS, COLOR TO BE WHITE. USE WITH MOEN LAVATORY FAUCET MODEL #L4621.
SH-1	LASCO	1623BFSTD	GEL COAT MATERIAL, SMOOTH TILE WALL FINISH, L-SHAPED GRAB BAR, L-SHAPED FOLD-UP SEAT. 60" X 30" X 74 7/8". ADA/ANSI COMPLIANT.
SH-2	KOHLER	K-12102-C	"FREEWILL" ONE PIECE ACRYLIC WHEELCHAIR SHOWER MODULE, MOLDED-IN FLOOR PATTERN, INTEGRAL SOAP LEDGES, STAINLESS STEEL GRAB BARS. USE WITH K-9132 SHOWER DRAIN AND K-1665 DOME LIGHT. ADA/ANSI COMPLIANT.
SK-1	ELKAY	LRAD1316	"LUSTERTONE" SINGLE BOWL SINK, SEAMLESSLY FORMED OF #20 GAUGE, TYPE 304 (18-8) NICKEL BEARING STAINLESS STEEL, SELF-RIMMING.13"X16" OVERALL, ADA COMPLIANT. USE WITH ELKAY FAUCET LK406.
SK-2	ELKAY	PSLVR1917	"PACEMAKER" SINGLE BOWL SINK, SEAMLESSLY FORMED OF #20 GAUGE, TYPE 304 (18-8) NICKEL BEARING STAINLESS STEEL, SELF RIMMING. 19" X 17" OVERALL, ANSI A112.19.SM COMPLIANT. USE WITH ELKAY FAUCET LKE4160.
SK-3	ELKAY	DLR251910	"LUSTERTONE" DEEP DOUBLE BOWL SINK, 25" X 19 1/2", SELF-RIMMING, SEEMLESSLY FORMED OF #18 GAUGE, TYPE 304 (18-8) NICKEL BEARING STAINLESS STEEL. COMPLIES WITH ANSI A112.19.SM. USE WITH ELKAY FAUCET LKE4160.
SK-4	ELKAY	BLR15	"LUSTERTONE" SINGLE BOWL SINK, SEAMLESSLY FORMED OF #20 GAUGE, TYPE 304 (18-8) NICKEL BEARING STAINLESS STEEL, SELF-RIMMING.15"X15" OVERALL. USE WITH ELKAY FAUCET LK406.
SK-5	KOHLER	K-1997	"BRENHAM" WALL MOUNT LAVATORY, VITREOUS CHINA WITH HANGER AND OVERFLOW. COLOR TO BE WHITE. USE WITH MOEN FAUCET MODEL # L4621.
SK-6	PIBBS	5300	PORCELAIN, WALL MOUNT SHAMPOO BOWL. COMES WITH AMERICAN STANDARD PLUMBING FIXTURES WITH SPRAYER HOSE, HANGING BRACKET, AND STANDARD DRAINS. 19" X 20" X 11 1/2". COLOR TO BE BLACK
MSB-1	FIAT	MSB2424	MOLDED STONE MOP SINK BASIN 24"X24". USE WITH GRID STRAINER, 2" OUTLET, #A880 WALL SERVICE FAUCET AND ALL NECESSARY HARDWARE TO COMPLETE INSTALLATION.
DF	HANSLEY-TAYLOR	5701	MOLDED STONE MOP SINK BASIN 24"X24". USE WITH GRID STRAINER, 2" OUTLET, #A880 WALL SERVICE FAUCET AND ALL NECESSARY HARDWARE TO COMPLETE INSTALLATION.
FD-1	ZURN	Z415B	FLOOR AND SHOWER DRAIN, DURA-COATED CAST IRON BODY WITH BOTTOM OUTLET, COMBINATION INVERTIBLE MEMBRANE CLAMP AND ADJUSTABLE COLLAR WITH SEEPAGE SLOTS AND "TYPE B" POLISHED NICKEL BRONZE, LIGHT DUTY STRAINER.
FCO	ZURN	Z1400	"LEVEL-TROL" ADJUSTABLE FLOOR CLEANOUT, DURA-COATED CAST IRON BODY WITH GAS AND WATERTIGHT ABS TAPERED THREAD PLUG AND ROUND SCORIATED CAST IRON HEAVY DUTY SECURED TOP.
RD-1, RD-2	ZURN	Z165	8-3/8" (213) ROOF DRAIN AND OVERFLOW DRAIN, DURA-COATED CAST IRON BODIES WITH COMBINATION MEMBRANE FLASHING CLAMP/ GRAVEL GUARDS, DOUBLE TOP-SET DECK PLATE, AND LOW SILHOUETTE CAST IRON DOMES.
HB	NIBCO	–	STANDARD HOSE BIBB
NFWH	ZURN	Z1315	EXPOSED, NON FREEZE WALL HYDRANT, WITH BRONZE CASING, ALL BRONZE INTERIOR PARTS, NON-TURNING OPERATING ROD WITH FREE-FLOATING COMPRESSION CLOSURE VALVE, REPLACABLE BRONZE SEAT AND SEAT WASHER, AND COMBINATION 3/4 FEMALE OR 1 MALE STRAIGHT IP INLET. COMPLETE WITH OPERATING KEY.
LT-1	FIAT	FL1	FLOOR MOUNTED MOLDED STONE LAUNDRY TUB 23"x21.5". FURNISH WITH 2727901100 HARDWARE PACKAGE AND A1 CHROME PLATED, METAL CONSTRUCTED FAUCET, AND ALL NECESSARY HARDWARE FOR A COMPLETE INSTALLATION.

H2M architects + engineers
538 Broad Hollow Road, 4th Floor East
Melville, NY 11747
631.756.8000 • www.h2m.com

CONSULTANTS:
FELLENZER ENGINEERING LLP
www.fellp.com
22 Mulberry St., Suite 2A,
Middletown, NY 10940
t 845-343-1481 fx 855-320-8735
Project #: 15-345

MARK	DATE	DESCRIPTION
	01/24/20	FINAL BID / PERMIT

ERIC D. FELLENZER, P.E.

STATE OF NEW YORK · ERIC D. FELLENZER · 071300-1 · LICENSED PROFESSIONAL ENGINEER

NY PROFESSIONAL ENGINEER
NO. 073084-1

"ALTERATION OF THIS DOCUMENT EXCEPT BY A LICENSED PROFESSIONAL IS ILLEGAL"

DESIGNED BY:	DRAWN BY:	CHECKED BY:	REVIEWED BY:
PMC	SRB	EDF	MDF
PROJECT No: FILB 1501	DATE: 11/15/19	SCALE: AS SHOWN	

CLIENT:
Montebello Realty GP LLC

Braemar at Montebello Assisted Living Residence

**Montebello Crossing,
250 Lafayette Avenue
(Route 59)
Village of Montebello
New York**

CONTRACT

STATUS
REGULATORY REVIEW

SHEET TITLE
**PLUMBING:
SCHEDULES & DETAILS**

DRAWING No.
P8.1

SHEET No.
OF

File Name: F:\2015\15-345 NEW ASSISTED LIVING RESIDENCE\P8.1.dwg (Layout: Layout1)
Date: Fri, Jan 24, 2020 - 9:26 AM (Name: srb)