PRELIMINARY PLANS PREPARED FOR

MONTEBELLO CROSSING DEVELOPMENT

VILLAGE OF MONTEBELLO
ROCKLAND COUNTY, NEW YORK

STANDARD NOTES:

1. THIS IS A SITE PLAN FOR TAX LOT 55.10-1-2 AS SHOWN ON THE VILLAGE OF MONTEBELLO TAX MAPS.
2. AREA OF TRACT:.....11.07 ACRES
3. ZONE:.....ROUTE 59 DEVELOPMENT DISTRICT
4. PROPOSED USE:.....ASSISTED LIVING RESIDENCE, MEDICAL OFFICE AND LOCAL CONVENIENCE.
5. RECORD OWNER/APPLICANT.....MONTEBELLO CROSSING, LLC 100 DUTCH HILL ROAD, SUITE 340 ORANGEBURG, NEW YORK 10962
6. FIRE DISTRICT:.....TALLMAN FP004
7. SCHOOL DISTRICT:.....RAMAPO CENTRAL, 392601
8. WATER DISTRICT:.....SUEZ WATER NEW YORK
9. WATER SUPPLY BY:.....SUEZ WATER NEW YORK
10. SEWER DISTRICT:.....RR, RCSD #1
11. DATUM:.....N.A.V.D. 88
12. ALL UTILITIES SHALL BE UNDERGROUND. ELECTRIC SERVICE SHALL BE IN CONDUIT OF NOT LESS THAN TWO (2) INCH DIAMETER.
13. THERE ARE NO COVENANTS, DEED RESTRICTIONS, EASEMENTS OR OTHER RESERVATIONS OF LAND RELATIVE TO THIS SITE, EXCEPT AS SHOWN ON THIS PLAN, SUBJECT TO THE FINDINGS OF A COMPLETE AND UP-TO-DATE TITLE SEARCH.
14. NO SIGN(S) OTHER THAN THOSE SHOWN ON THESE DRAWINGS ARE PERMITTED WITHOUT PRIOR APPROVAL OF THE PLANNING BOARD. TENANTS ARE TO BE ADVISED OF THIS.
15. ALL CONSTRUCTION TO MEET WITH CURRENT VILLAGE OF MONTEBELLO SPECIFICATIONS.
16. THE PROPERTY IS LOCATED BETWEEN MILE MARKERS 202 8501 1006 AND 202 8501 1005.
17. ALL TRAFFIC SIGNS SHALL CONFORM WITH "N.Y.S.D.O.T. MANUAL OF UNIFORM TRAFFIC CONTROL DEVICES."
18. UNDERGROUND UTILITIES ARE SHOWN IN AN APPROXIMATE WAY FROM AVAILABLE INFORMATION. THE CONTRACTOR SHALL CALL THE LOCAL UNDERGROUND FACILITIES PROTECTIVE ORGANIZATION TO HAVE ALL UNDERGROUND UTILITIES MARKED IN THE FIELD PRIOR TO ANY CLEARING, DIGGING, OR CONSTRUCTION. THE CONTRACTOR SHALL ALSO VERIFY THE LOCATION AND INVERT OF ALL UTILITIES PRIOR TO ANY CONSTRUCTION. ANY UTILITY FOR WHICH NO EVIDENCE CAN BE SEEN ON THE SURFACE OF THE LANDS MAY NOT BE SHOWN ON THIS DRAWING.
19. ALL LANDSCAPING AS SHOWN ON THIS SITE PLAN SHALL BE MAINTAINED IN A VIGOROUS GROWING CONDITION. ANY PLANTS NOT SO MAINTAINED SHALL BE REPLACED WITH HEALTHY NEW PLANTS OF COMPARABLE SIZE, TYPE AND QUALITY AT THE BEGINNING OF THE IMMEDIATE FOLLOWING GROWING SEASON.
20. IF ANY EXISTING TREES THAT ARE DESIGNATED TO REMAIN ARE DESTROYED DURING CONSTRUCTION, OR OTHERWISE, THEY SHALL BE REPLACED IN KIND WITH A MINIMUM 4" CALIPER TREE.
21. THE UNDERSIGNED, OWNER AND/OR APPLICANT, AS A CONDITION OF APPROVAL OF THIS SITE PLAN, HEREBY AGREES TO COMPLETE THE WITHIN SITE PLAN AS DRAWN AND ALL IMPROVEMENTS SHOWN THEREON, AS A CONDITION OF THE ISSUANCE OF A BUILDING PERMIT. THE APPLICANT/OWNER IS AWARE THAT NO CHANGES IN THIS PLAN MAY BE MADE UNLESS APPROVED BY THE PLANNING BOARD.

APPLICANT _____ DATE

OWNER_____ DATE

22. PLANS ARE BASED ON FIELD ENGINEERING DATA AND CERTIFIED HERETO BY:

LICENSED PROFESSIONAL ENGINEER OR LAND SURVEYOR DATE

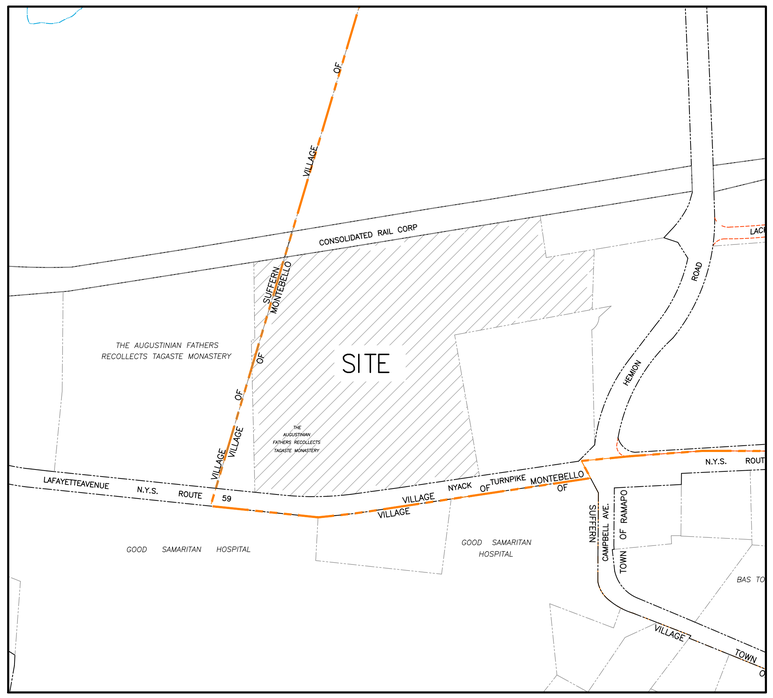

VICINITY MAP
SCALE: 1"=200'

LIST OF DRAWINGS

1. *TITLE SHEET*
2. *SUBDIVISION PLAT*
3. *SITE PLAN*
4. *GRADING AND UTILITY*
5. *EROSION AND SEDIMENT CONTROL PLAN*

5A. *EROSION AND SEDIMENT CONTROL DETAILS*

6. *SIGNAGE PLAN*
7. *FIRE TRUCK MANEUVERING PLAN (1 OF 3)*
8. *FIRE TRUCK MANEUVERING PLAN (2 OF 3)*
9. *FIRE TRUCK MANEUVERING PLAN (3 OF 3)*
10. *CONSTRUCTION DETAILS (1 OF 4)*
11. *CONSTRUCTION DETAILS (2 OF 4)*
12. *CONSTRUCTION DETAILS (3 OF 4)*
13. *CONSTRUCTION DETAILS (4 OF 4)*
14. *MAIN ACCESS ROAD PROFILE*
15. *TREE MAP*
16. *TREE TABLE*

PL-1 LANDSCAPING PLAN (BY OTHERS)
PL-2 LIGHTING PLAN (BY OTHERS)

APPLICANT/OWNER:

MONTEBELLO CROSSING, LLC
100 DUTCH HILL ROAD, SUITE 340
ORANGEBURG, NEW YORK 10962

SITE ENGINEER:

BROOKER ENGINEERING P.L.L.C.
74 LAFAYETTE AVENUE, SUITE 501
SUFFERN, NEW YORK 10901
(845) 357-4411

LAND SURVEYOR:

GREENWELL SURVEYING
85 LAFAYETTE AVENUE, #A
SUFFERN, NEW YORK 10901
(845) 357-0830

REV	DESCRIPTION	BY	DATE
6	PER PB COMMENTS	ZK	11/21/17
5	PER PB COMMENTS	AP	10/20/17
4	PER PB COMMENTS	AP	9/18/17
3	SITE PLAN SUBMISSION	AP	8/16/17
2	AS PER COMMENTS	AP	5/17/17
1	AS PER PB COMMENTS	AP	1/24/17

DISCLAIMER:
UNAUTHORIZED ALTERATION OR ADDITIONS TO THESE PLANS IS A VIOLATION OF THE N.Y.S. EDUCATION LAW, ARTICLE 145, SECTION 7209, SUBSECTION 2.

BROOKER ENGINEERING, PLLC
PROFESSIONAL ENGINEERS AND LAND SURVEYORS
LAND DEVELOPMENT • MUNICIPAL • STRUCTURAL • HYDROLOGICAL • SURVEYING
www.BrookerEngineering.com
74 Lafayette Avenue, Suite 501 Suffern, NY 10901 (845) 357-4411
46 N. Central Avenue Ramsey, NJ 07446 (201) 684-1221

PROJECT:
MONTEBELLO CROSSING
VILLAGE OF MONTEBELLO
ROCKLAND COUNTY
NEW YORK

TITLE:
TITLE SHEET

STATE OF NEW YORK · BRIAN A. BROOKER · 60229 · LICENSED PROFESSIONAL ENGINEER

BRIAN A. BROOKER,
PROFESSIONAL ENGINEER
N.Y.S. Lic. No. 60229

PROJECT NO:	DRAWN:	CHECKED:
13082	Z.K.	B.B.

SCALE: AS SHOWN
GRAPHIC SCALE:

DATE:	DRAWING NO:
5/27/2016	1

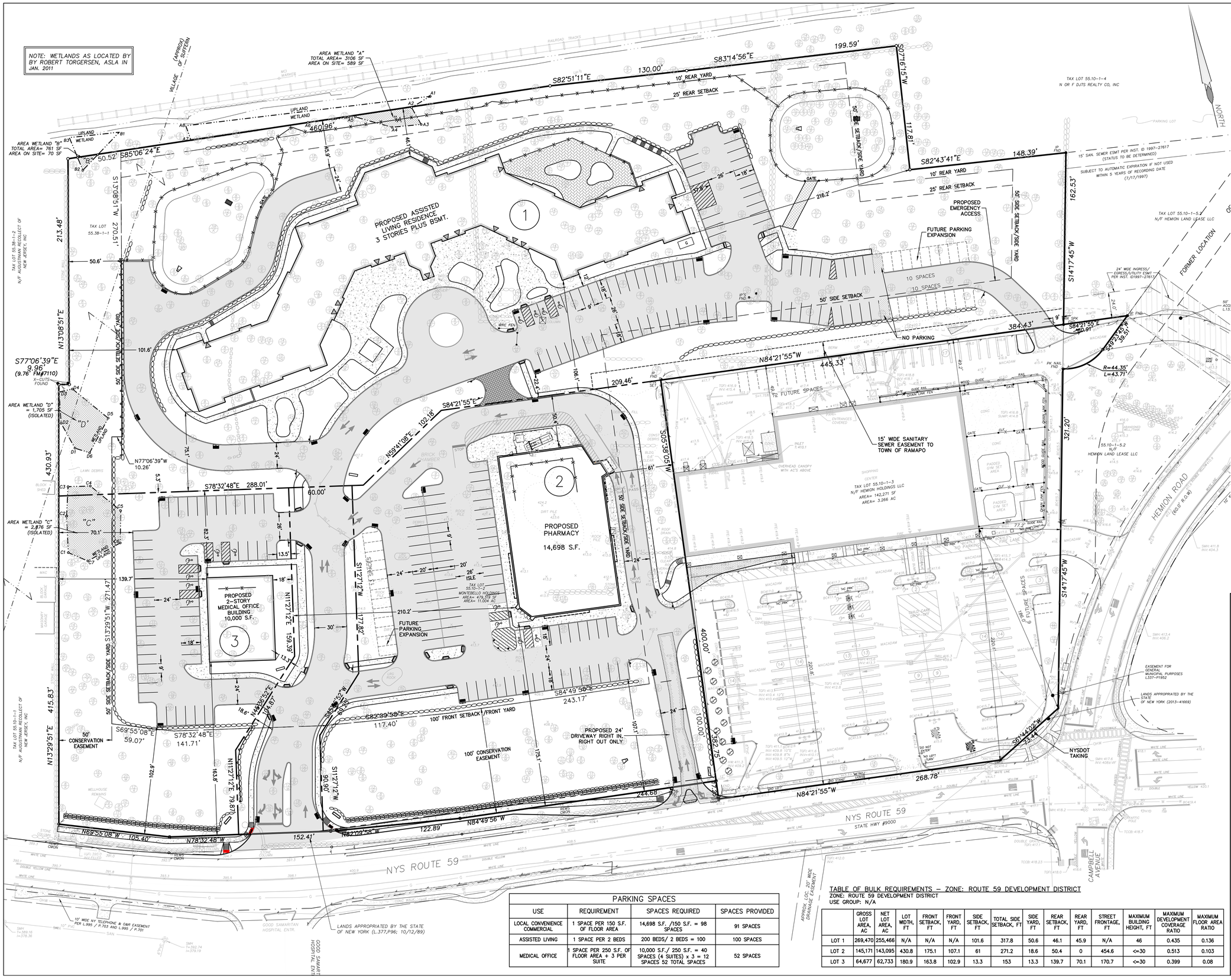

SUBDIVISION NOTES:

1. KNOWN AS SECTION 55.190, BLOCK 1, LOT 2 OF THE VILLAGE OF MONTEBELLO TAX MAPS
2. TOTAL AREA OF PARCELS: 11.07 ACRES
3. ZONE: ROUTE 59 DEVELOPMENT DISTRICT
4. NUMBER OF LOTS: 3 PROPOSED
5. RECORD OWNER: MONTEBELLO CROSSING, LLC
   100 DUTCH HILL ROAD, SUITE 340
   ORANGEBURG, NEW YORK 10962
6. APPLICANT: MONTEBELLO CROSSING, LLC
   100 DUTCH HILL ROAD, SUITE 340
   ORANGEBURG, NEW YORK 10962
7. FIRE DISTRICT: TALLMAN
8. SCHOOL DISTRICT: RAMAPO CENTRAL
9. WATER DISTRICT: SUEZ WATER NEW YORK
10. WATER SUPPLY: SUEZ WATER NEW YORK
11. SEWER DISTRICT: RCSD
12. DATUM: USGS: NAVD 88
13. MONUMENTS IN ACCORDANCE WITH VILLAGE SPECIFICATIONS TO BE SET AT LOCATIONS MARKED WITH THE SYMBOL ⊡
14. ALL PROPERTY CORNERS TO BE MARKED WITH 3/4" IRON PIPE.
15. THE INDIVIDUAL LOTS ARE DESIGNATED WITH THE TAX LOT NUMBERS SHOWN THUS: [ ]
16. THIS PLAT DOES NOT CONFLICT WITH THE COUNTY OFFICIAL MAP AND HAS BEEN APPROVED IN THE MANNER SPECIFIED BY SECTION 239N OF THE GENERAL MUNICIPAL LAW.
17. THIS PLAT IS SUBJECT TO COMPLIANCE WITH ALL LAWS, REGULATIONS AND SPECIFICATIONS OF THE VILLAGE OF MONTEBELLO, AND WITH ALL DETAILS AND SPECIFICATIONS INDICATED ON THE APPROVED CONSTRUCTION PLANS ON FILE WITH THE VILLAGE OF MONTEBELLO.
18. BOUNDARY AND TOPOGRAPHIC SURVEY PREPARED BY JAY A. GREENWELL P.L.S. N.Y. LIC# 49676 ON 2/27/14.
19. WETLANDS DELINEATED BY ROBERT TORGERSEN, ASLA IN JANUARY 2011.
20. SEWER AND WATER SERVICE LINES SHALL BE LAID IN SEPARATE TRENCHES WITH A MINIMUM SEPARATION OF 10 FEET.
21. SANITARY SEWER INFILTRATION AND EXFILTRATION LIMIT IS 25 GALLONS PER INCH DIAMETER PER MILE PER DAY. CERTIFICATES OF OCCUPANCY MAY NOT BE REQUESTED, NOR ANY OCCUPANCY PERMITTED, UNTIL A CERTIFICATE OF COMPLIANCE, CERTIFIED BY A LICENSED NEW YORK STATE PROFESSIONAL ENGINEER, IS SUBMITTED TO AND APPROVED BY THE TOWN OF RAMAPO AND RCSD #1. COPIES OF THIS CERTIFICATE SHOULD ALSO BE SENT TO THE ROCKLAND COUNTY DEPARTMENT OF HEALTH AND ROCKLAND COUNTY SEWER DISTRICT #1.
22. ALL SANITARY SEWER CONSTRUCTION TO MEET CURRENT TOWN OF RAMAPO AND RCSD #1 STANDARDS. IF TOWN OF RAMAPO AND RCSD #1 STANDARDS CONTRADICT, THE STRICTER STANDARD SHALL APPLY.
23. SANITARY SEWER PERMITS MUST BE OBTAINED FROM THE TOWN OF RAMAPO AND RCSD #1 PRIOR TO THE ISSUANCE OF BUILDING PERMITS.
24. THE INSPECTION FEE FOR THE SANITARY SEWERS IS TO BE PAID TO THE TOWN OF RAMAPO AND RCSD#1.
25. IF THE LOWEST FLOOR TO BE SEWERED IS LOWER THAN THE UPSTREAM RIM ELEVATION OF THE SANITARY SEWER MANHOLE, AN INTERIOR CHECK VALVE MUST BE INSTALLED.
26. ALL MANHOLES TO BE VACUUM TESTED AS REQUIRED BY THE TOWN OF RAMAPO AND RCSD #1.
27. ROCKLAND COUNTY DEPARTMENT OF HEALTH (RCDOH) APPROVAL IS LIMITED TO 5 YEARS AND SHALL EXPIRE 5 YEARS FROM THE DATE OF THE FILING OF THE PLAT IN THE ROCKLAND COUNTY CLERK'S OFFICE. TIME EXTENSIONS MAY BE GRANTED BY THE RCDOH BASED UPON DEVELOPMENT FACTS AND THE REALTY SUBDIVISION REGULATIONS IN EFFECT AT THAT TIME. A NEW PLAN SUBMISSION MAY BE REQUIRED TO OBTAIN A TIME EXTENSION.
28. AS-BUILT SANITARY SEWER AND WATER MAIN DRAWINGS (PLAN AND PROFILE) ARE TO BE SUBMITTED TO THE RCDOH FOR REVIEW AND ACCEPTANCE UPON COMPLETION OF THE INSTALLATION OF IMPROVEMENTS.
29. THE WATER SYSTEM WAS DESIGNED TO PROVIDE A NEEDED FIRE FLOW UP TO 750 GPM. THE WATER SYSTEM MUST BE EVALUATED FOR ANY PROPOSED STRUCTURES REQUIRING A FIRE FLOW GREATER THAN 750 GPM.
30. EROSION CONTROL MEASURES FOR INDIVIDUAL LOTS SHALL BE PROVIDED ON PLOT PLANS AT TIME OF APPLICATION FOR BUILDING PERMITS.
31. THE LONG TERM MAINTENANCE OF THE STORMWATER MANAGEMENT FACILITIES SHALL BE THE RESPONSIBILITY OF THE PROPERTY OWNER(S). A LEGALLY BINDING STORMWATER MANAGEMENT MAINTENANCE AGREEMENT SHALL BE FILED IN THE OFFICE OF THE ROCKLAND COUNTY CLERK.

PARKING SPACES

USE	REQUIREMENT	SPACES REQUIRED	SPACES PROVIDED
LOCAL CONVENIENCE COMMERCIAL	1 SPACE PER 150 S.F. OF FLOOR AREA	14,698 S.F. /150 S.F. = 98 SPACES	91 SPACES
ASSISTED LIVING	1 SPACE PER 2 BEDS	200 BEDS/ 2 BEDS = 100	100 SPACES
MEDICAL OFFICE	1 SPACE PER 250 S.F. OF FLOOR AREA + 3 PER SUITE	10,000 S.F./ 250 S.F. = 40 SPACES (4 SUITES) x 3 = 12 SPACES 52 TOTAL SPACES	52 SPACES

TABLE OF BULK REQUIREMENTS – ZONE: ROUTE 59 DEVELOPMENT DISTRICT

ZONE: ROUTE 59 DEVELOPMENT DISTRICT
USE GROUP: N/A

	GROSS LOT AREA, AC	NET LOT AREA, AC	LOT WIDTH, FT	FRONT SETBACK, FT	FRONT YARD, FT	SIDE SETBACK, FT	TOTAL SIDE SETBACK, FT	SIDE YARD, FT	REAR SETBACK, FT	REAR YARD, FT	STREET FRONTAGE, FT	MAXIMUM BUILDING HEIGHT, FT	MAXIMUM DEVELOPMENT COVERAGE RATIO	MAXIMUM FLOOR AREA RATIO
LOT 1	269,470	255,466	N/A	N/A	N/A	101.6	317.8	50.6	46.1	45.9	N/A	46	0.435	0.136
LOT 2	145,171	143,095	430.8	175.1	107.1	61	271.2	18.6	50.4	0	454.6	<=30	0.513	0.103
LOT 3	64,677	62,733	180.9	163.8	102.9	13.3	153	13.3	139.7	70.1	170.7	<=30	0.399	0.08

REV	DESCRIPTION	BY	DATE
6	PER PB COMMENTS	ZK	11/21/17
5	PER PB COMMENTS	AP	10/20/17
4	PER PB COMMENTS	AP	9/18/17
3	SITE PLAN SUBMISSION	AP	8/16/17
2	AS PER COMMENTS	AP	5/17/17
1	AS PER PB COMMENTS	AP	1/24/17

DISCLAIMER:
UNAUTHORIZED ALTERATION OR ADDITIONS TO THESE PLANS IS A VIOLATION OF THE N.Y.S. EDUCATION LAW, ARTICLE 145, SECTION 7209, SUBSECTION 2.

BROOKER ENGINEERING, PLLC
PROFESSIONAL ENGINEERS AND LAND SURVEYORS
LAND DEVELOPMENT • MUNICIPAL • STRUCTURAL • HYDROLOGICAL • SURVEYING
www.BrookerEngineering.com
74 Lafayette Avenue, Suite 501
Suffern, NY 10901
(845) 357-4411
46 N. Central Avenue
Ramsey, NJ 07446
(201) 684-1221

PROJECT:
MONTEBELLO CROSSING
VILLAGE OF MONTEBELLO
ROCKLAND COUNTY
NEW YORK

TITLE:
SUBDIVISION PLAT

STATE OF NEW YORK · BRIAN A. BROOKER · 60229 · LICENSED PROFESSIONAL ENGINEER

BRIAN A. BROOKER,
PROFESSIONAL ENGINEER
N.Y.S. Lic. No. 60229

PROJECT NO:	DRAWN:	CHECKED:
13082	Z.K.	B.B.

SCALE: 1"=40'
GRAPHIC SCALE: 0 40' 80'
DATE: 5/27/2016
DRAWING NO: 2

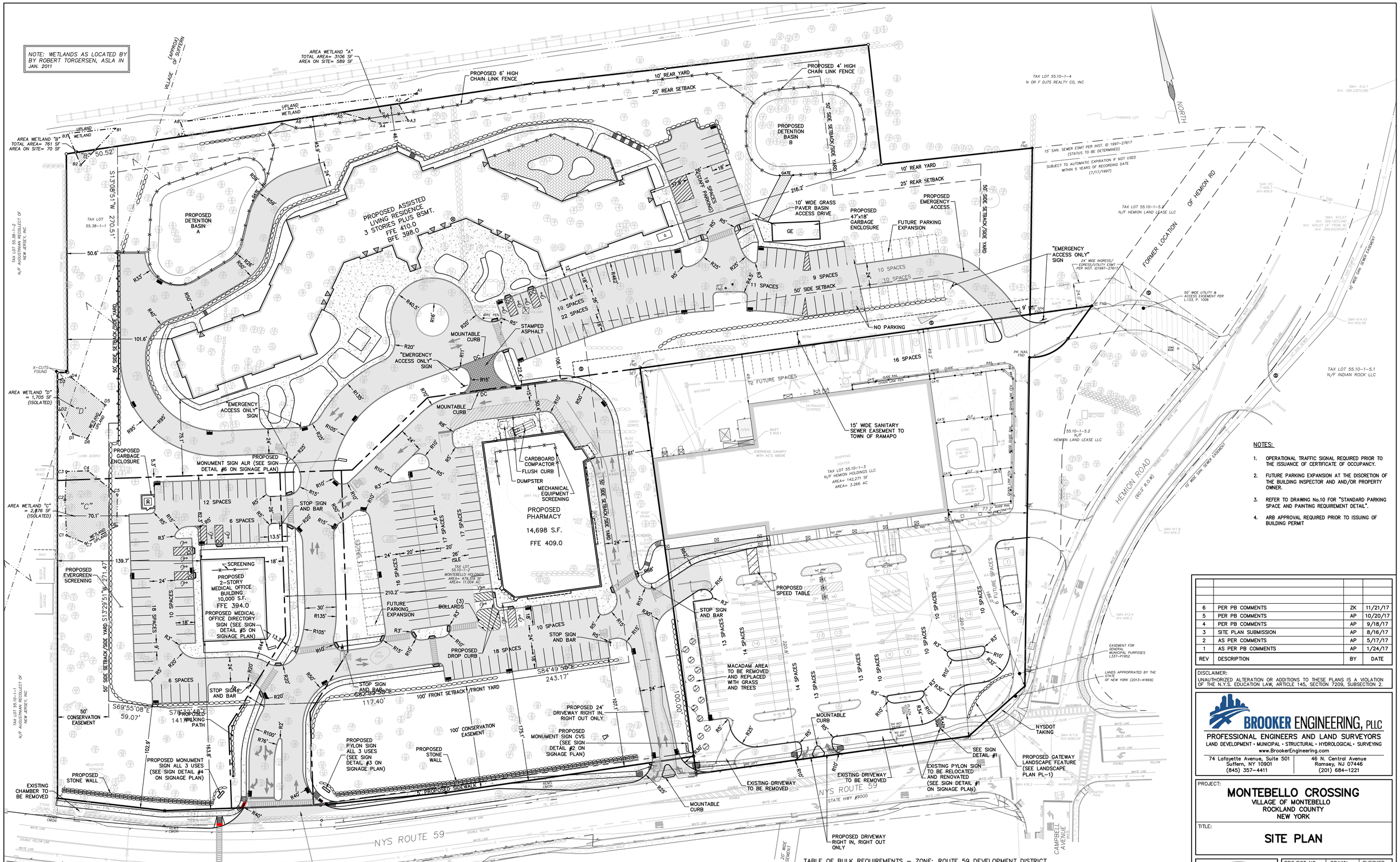

NOTES:

1. OPERATIONAL TRAFFIC SIGNAL REQUIRED PRIOR TO THE ISSUANCE OF CERTIFICATE OF OCCUPANCY.
2. FUTURE PARKING EXPANSION AT THE DISCRETION OF THE BUILDING INSPECTOR AND AND/OR PROPERTY OWNER.
3. REFER TO DRAWING No.10 FOR "STANDARD PARKING SPACE AND PAINTING REQUIREMENT DETAIL".
4. ARB APPROVAL REQUIRED PRIOR TO ISSUING OF BUILDING PERMIT

REV	DESCRIPTION	BY	DATE
6	PER PB COMMENTS	ZK	11/21/17
5	PER PB COMMENTS	AP	10/20/17
4	PER PB COMMENTS	AP	9/18/17
3	SITE PLAN SUBMISSION	AP	8/16/17
2	AS PER COMMENTS	AP	5/17/17
1	AS PER PB COMMENTS	AP	1/24/17

DISCLAIMER:
UNAUTHORIZED ALTERATION OR ADDITIONS TO THESE PLANS IS A VIOLATION OF THE N.Y.S. EDUCATION LAW, ARTICLE 145, SECTION 7209, SUBSECTION 2.

BROOKER ENGINEERING, PLLC
PROFESSIONAL ENGINEERS AND LAND SURVEYORS
LAND DEVELOPMENT • MUNICIPAL • STRUCTURAL • HYDROLOGICAL • SURVEYING
www.BrookerEngineering.com
74 Lafayette Avenue, Suite 501 Suffern, NY 10901 (845) 357-4411
46 N. Central Avenue Ramsey, NJ 07446 (201) 684-1221

PROJECT:
MONTEBELLO CROSSING
VILLAGE OF MONTEBELLO
ROCKLAND COUNTY
NEW YORK

TITLE:
SITE PLAN

STATE OF NEW YORK · BRIAN A. BROOKER · 60229 · LICENSED PROFESSIONAL ENGINEER
BRIAN A. BROOKER, PROFESSIONAL ENGINEER
N.Y.S. Lic. No. 60229

PROJECT NO:	DRAWN:	CHECKED:
13082	Z.K.	B.B.

SCALE: 1"=40'
GRAPHIC SCALE: 0 40' 80'
DATE: 5/27/2016
DRAWING NO: 3

PARKING SPACES

USE	REQUIREMENT	SPACES REQUIRED	SPACES PROVIDED
LOCAL CONVENIENCE COMMERCIAL	1 SPACE PER 150 S.F. OF FLOOR AREA	14,698 S.F. /150 S.F. = 98 SPACES	91 SPACES
ASSISTED LIVING	1 SPACE PER 2 BEDS	200 BEDS/ 2 BEDS = 100	100 SPACES
MEDICAL OFFICE	1 SPACE PER 250 S.F. OF FLOOR AREA + 3 PER SUITE	10,000 S.F./ 250 S.F. = 40 SPACES (4 SUITES) x 3 = 12 SPACES 52 TOTAL SPACES	52 SPACES

TABLE OF BULK REQUIREMENTS – ZONE: ROUTE 59 DEVELOPMENT DISTRICT
ZONE: ROUTE 59 DEVELOPMENT DISTRICT
USE GROUP: N/A

	GROSS LOT AREA, AC	NET LOT AREA, AC	LOT WIDTH, FT	FRONT SETBACK, FT	FRONT YARD, FT	SIDE SETBACK, FT	TOTAL SIDE SETBACK, FT	SIDE YARD, FT	REAR SETBACK, FT	REAR YARD, FT	STREET FRONTAGE, FT	MAXIMUM BUILDING HEIGHT, FT	MAXIMUM DEVELOPMENT COVERAGE RATIO	MAXIMUM FLOOR AREA RATIO
LOT 1	269,470	255,466	N/A	N/A	N/A	101.6	317.8	50.6	46.1	45.9	N/A	46	0.435	0.136
LOT 2	145,171	143,095	430.8	175.1	107.1	61	271.2	18.6	50.4	0	454.6	<=30	0.513	0.103
LOT 3	64,677	62,733	180.9	163.8	102.9	13.3	153	13.3	139.7	70.1	170.7	<=30	0.399	0.08

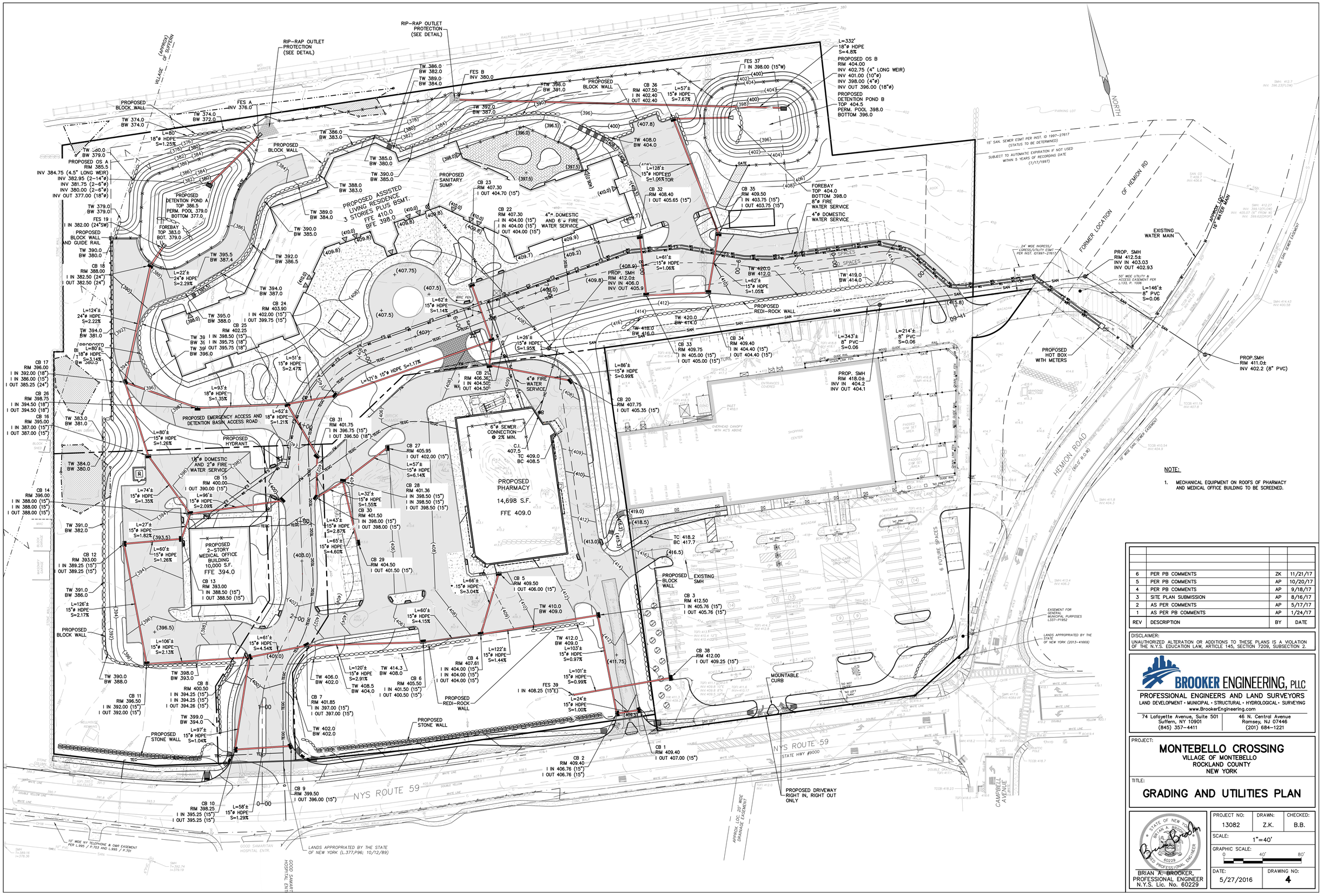

REV	DESCRIPTION	BY	DATE
6	PER PB COMMENTS	ZK	11/21/17
5	PER PB COMMENTS	AP	10/20/17
4	PER PB COMMENTS	AP	9/18/17
3	SITE PLAN SUBMISSION	AP	8/16/17
2	AS PER COMMENTS	AP	5/17/17
1	AS PER PB COMMENTS	AP	1/24/17

DISCLAIMER:
UNAUTHORIZED ALTERATION OR ADDITIONS TO THESE PLANS IS A VIOLATION OF THE N.Y.S. EDUCATION LAW, ARTICLE 145, SECTION 7209, SUBSECTION 2.

BROOKER ENGINEERING, PLLC
PROFESSIONAL ENGINEERS AND LAND SURVEYORS
LAND DEVELOPMENT • MUNICIPAL • STRUCTURAL • HYDROLOGICAL • SURVEYING
www.BrookerEngineering.com
74 Lafayette Avenue, Suite 501 Suffern, NY 10901 (845) 357-4411
46 N. Central Avenue Ramsey, NJ 07446 (201) 684-1221

PROJECT:
MONTEBELLO CROSSING
VILLAGE OF MONTEBELLO
ROCKLAND COUNTY
NEW YORK

TITLE:
GRADING AND UTILITIES PLAN

BRIAN A. BROOKER, PROFESSIONAL ENGINEER
N.Y.S. Lic. No. 60229

PROJECT NO:	DRAWN:	CHECKED:
13082	Z.K.	B.B.

SCALE: 1"=40'
GRAPHIC SCALE: 0 40' 80'
DATE: 5/27/2016
DRAWING NO: 4

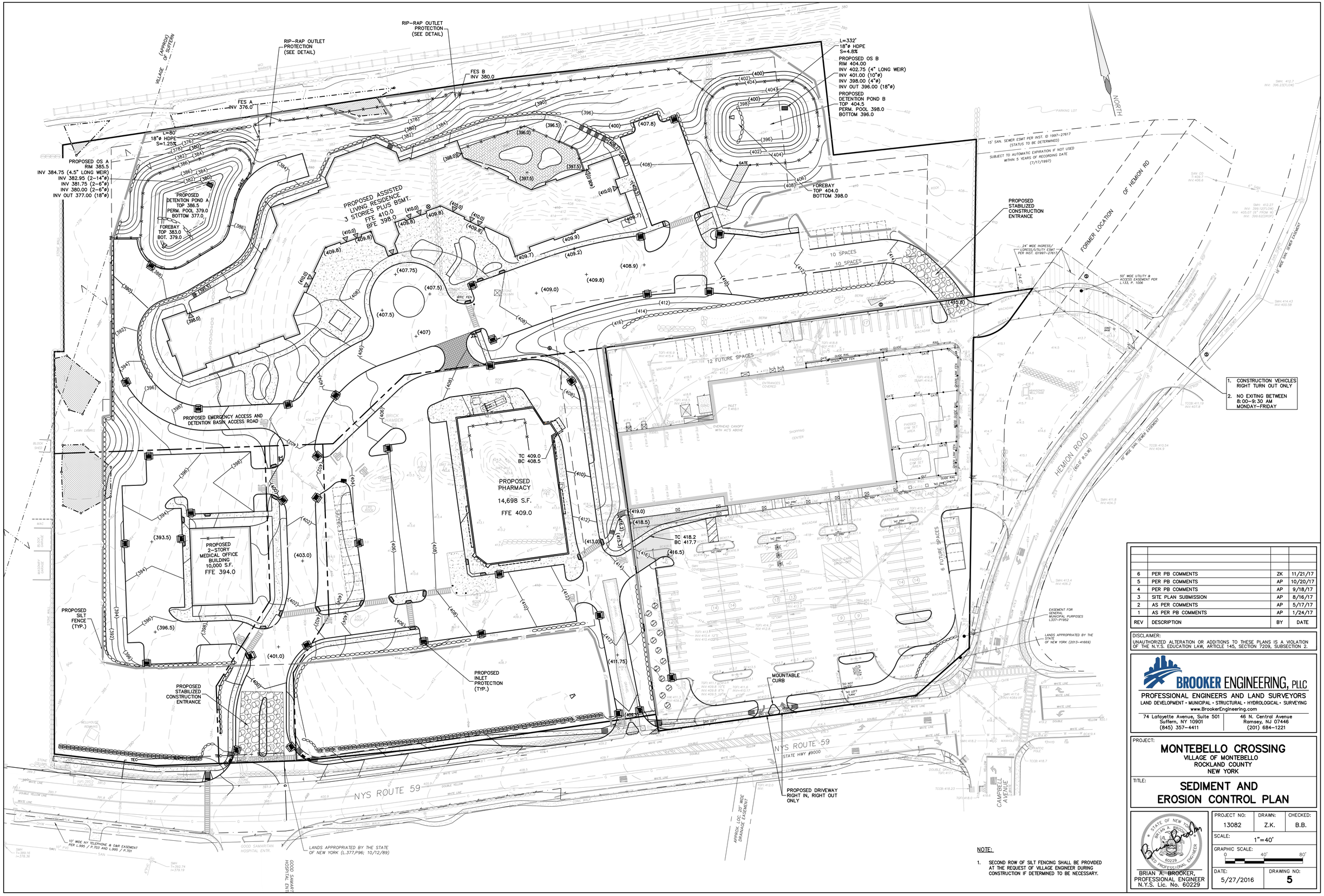

NOTE:

1. SECOND ROW OF SILT FENCING SHALL BE PROVIDED AT THE REQUEST OF VILLAGE ENGINEER DURING CONSTRUCTION IF DETERMINED TO BE NECESSARY.

REV	DESCRIPTION	BY	DATE
6	PER PB COMMENTS	ZK	11/21/17
5	PER PB COMMENTS	AP	10/20/17
4	PER PB COMMENTS	AP	9/18/17
3	SITE PLAN SUBMISSION	AP	8/16/17
2	AS PER COMMENTS	AP	5/17/17
1	AS PER PB COMMENTS	AP	1/24/17

DISCLAIMER:
UNAUTHORIZED ALTERATION OR ADDITIONS TO THESE PLANS IS A VIOLATION OF THE N.Y.S. EDUCATION LAW, ARTICLE 145, SECTION 7209, SUBSECTION 2.

BROOKER ENGINEERING, PLLC
PROFESSIONAL ENGINEERS AND LAND SURVEYORS
LAND DEVELOPMENT • MUNICIPAL • STRUCTURAL • HYDROLOGICAL • SURVEYING
www.BrookerEngineering.com
74 Lafayette Avenue, Suite 501 Suffern, NY 10901 (845) 357-4411
46 N. Central Avenue Ramsey, NJ 07446 (201) 684-1221

PROJECT:
MONTEBELLO CROSSING
VILLAGE OF MONTEBELLO
ROCKLAND COUNTY
NEW YORK

TITLE:
SEDIMENT AND EROSION CONTROL PLAN

STATE OF NEW YORK · BRIAN A. BROOKER · 060229 · LICENSED PROFESSIONAL ENGINEER

BRIAN A. BROOKER, PROFESSIONAL ENGINEER N.Y.S. Lic. No. 60229

PROJECT NO:	DRAWN:	CHECKED:
13082	Z.K.	B.B.

SCALE: 1"=40'

GRAPHIC SCALE: 0 40' 80'

DATE: 5/27/2016

DRAWING NO: 5

C:\ABEL\13\13082_Dwg\Rev 6\SITE PLAN.dwg, 11/21/2017 1:37:31 PM, Zkamm

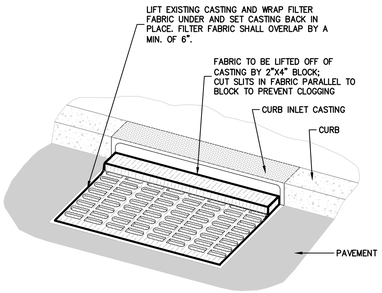

NOTE:
1. CONTRACTOR IS TO CLEAN INLET FILTER AFTER EVERY STORM
2. CONTRACTOR TO REMOVE FABRIC AND LUMBER UPON COMPLETION OF PROJECT
3. FABRIC TO BE MIRAFI 100X OR EQUIVALENT

CURB INLET FILTER DETAIL
N.T.S.

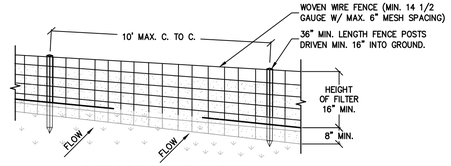

PERSPECTIVE VIEW

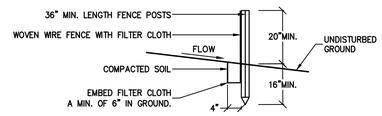

SECTION VIEW

NOTES:
1. WOVEN WIRE FENCE TO BE FASTENED SECURELY TO FENCE POSTS WITH WIRE TIES OR STAPLES. POSTS SHALL BE STEEL EITHER "T" OR "U" TYPE OR HARDWOOD.
2. FILTER CLOTH TO BE TO BE FASTENED SECURELY TO WOVEN WIRE FENCE WITH TIES SPACED EVERY 24" AT TOP AND MID SECTION. FENCE SHALL BE WOVEN WIRE, 12 1/2 GAUGE, 6" MAXIMUM MESH OPENING.
3. WHEN TWO SECTIONS OF FILTER CLOTH ADJOIN EACH OTHER THEY SHALL BE OVER-LAPPED BY SIX INCHES AND FOLDED. FILTER CLOTH SHALL BE EITHER FILTER X, MIRAFI 100X, STABILINKA T140N, OR APPROVED EQUIVALENT.
4. PREFABRICATED UNITS SHALL BE GEOFAB, ENVIROFENCE, OR APPROVED EQUIVALENT.
5. MAINTENANCE SHALL BE PERFORMED AS NEEDED AND MATERIAL REMOVED WHEN "BULGES" DEVELOP IN THE SILT FENCE.

SILT FENCE
N.T.S.

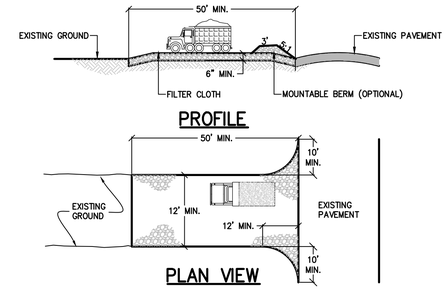

NOTES:
1. STONE SIZE – USE 1 INCH STONE, OR RECLAIMED OR RECYCLED CONCRETE EQUIVALENT.
2. LENGTH – NOT LESS THAN 50' (EXCEPT ON A SINGLE RESIDENCE LOT WHERE A 30 FOOT MINIMUM LENGTH WOULD APPLY).
3. THICKNESS – NOT LESS THAN SIX (6) INCHES.
4. WIDTH – TWELVE (12) FOOT MINIMUM, BUT NOT LESS THAN THE FULL WIDTH AT POINTS WHERE INGRESS AND EGRESS OCCURS. TWENTY – FOUR (24) FOOT IF SINGLE ENTRANCE SITE.
5. GEOTEXTILE – WILL BE PLACED OVER THE ENTIRE AREA PRIOR TO PLACING OF STONE.
6. SURFACE WATER – ALL SURFACE WATER FLOWING OR DIVERTED TOWARD CONSTRUCTION ENTRANCES SHALL BE PIPED BENEATH THE ENTRANCE. IF PIPING IS IMPRACTICAL, A MOUNTABLE BERM WITH 5:1 SLOPES WILL BE PERMITTED.
7. MAINTENANCE – THE ENTRANCE SHALL BE MAINTAINED IN A CONDITION WHICH WILL PREVENT TRACKING OR FLOWING OF SEDIMENT SPILLED, DROPPED, WASHED OR TRACTED ONTO PUBLIC RIGHTS-OF-WAY, ALL SEDIMENT SPILLED, DROPPED, WASHED OR TRACTED ONTO PUBLIC RIGHTS-OF-WAY MUST BE REMOVED IMMEDIATELY.
8. WHEN WASHING IS REQUIRES, IT SHALL BE DONE ON AN AREA STABILIZED WITH STONE AND WHICH DRAINS INTO AN APPROVED SEDIMENT TRAPPING DEVICE.
9. PERIODIC INSPECTION AND NEEDED MAINTENANCE SHALL BE PROVIDED AFTER EACH RAIN.

STABILIZED CONSTRUCTION ENTRANCE DETAIL
N.T.S.

STANDARD EROSION CONTROL NOTES:
1. ALL SOIL EROSION AND SEDIMENT CONTROL PRACTICES SHALL BE INSTALLED IN ACCORDANCE WITH THE NEW YORK STANDARDS AND SPECIFICATIONS FOR EROSION AND SEDIMENT CONTROL, AND SHALL BE INSTALLED IN PROPER SEQUENCE AND MAINTAINED UNTIL PERMANENT STABILIZATION IS ESTABLISHED.
2. THE SITE AT ALL TIMES SHALL BE GRADED AND MAINTAINED SUCH THAT ALL STORMWATER RUNOFF IS DIVERTED TO SOIL EROSION AND SEDIMENT CONTROL FACILITIES.
3. THE CONTRACTOR IS RESPONSIBLE FOR MAINTAINING AND INSPECTING ALL SOIL EROSION AND SEDIMENT CONTROL MEASURES ON A REGULAR BASIS, INCLUDING AFTER EVERY STORM EVENT.
4. STOCKPILES ARE NOT TO BE LOCATED WITHIN A FLOODPLAIN, BUFFER, ON A SLOPE, ROADWAY OR DRAINAGE FACILITY. THE BASE OF ALL STOCKPILES SHALL BE CONTAINED BY A HAY BALE SEDIMENT BARRIER OR SILT FENCE.
5. A CRUSHED STONE, VEHICLE WHEEL-CLEANING BLANKET SHALL BE INSTALLED WHEREVER A CONSTRUCTION ACCESS ROAD INTERSECTS ANY PAVED ROADWAY IN ACCORDANCE WITH THE NEW YORK STANDARDS AND SPECIFICATIONS FOR EROSION AND SEDIMENT CONTROL.
6. ALL SOIL WASHED, DROPPED, SPILLED, OR TRACKED OUTSIDE THE WORK AREA OR ONTO PUBLIC RIGHT-OF-WAY, SHALL BE REMOVED IMMEDIATELY. PAVED ROADWAYS MUST BE KEPT CLEAN AT ALL TIMES.
7. DUST SHALL BE CONTROLLED AT ALL TIMES IN ACCORDANCE WITH THE NEW YORK STANDARDS AND SPECIFICATIONS FOR EROSION AND SEDIMENT CONTROL
8. TREES TO REMAIN AFTER CONSTRUCTION WITHIN THE WORK AREA SHALL BE PROTECTED WITH A SUITABLE FENCE INSTALLED AT THE DRIP LINE OR BEYOND IN ACCORDANCE WITH THE NEW YORK STANDARDS AND SPECIFICATIONS FOR EROSION AND SEDIMENT CONTROL.
9. TEMPORARY SEDIMENTATION ENTRAPMENT AREAS SHALL BE PROVIDED AT KEY LOCATIONS TO INTERCEPT AND CLARIFY SILT LADEN RUNOFF FROM THE SITE. THESE MAY BE EXCAVATED OR MAY BE CREATED UTILIZING EARTHEN BERMS, RIP-RAP OR CRUSHED STONE DAMS, HAY BALES, OR OTHER CHANNELIZATION SHALL BE CONSTRUCTED TO INSURE THAT ALL SILT LADEN WATERS ARE DIRECTED INTO THE ENTRAPMENT AREAS, WHICH SHALL NOT BE PERMITTED TO FILL IN, BUT SHALL BE CLEANED PERIODICALLY DURING THE COURSE OF CONSTRUCTION. THE COLLECTION SILT SHALL BE DEPOSITED IN AREAS SAFE FROM FURTHER EROSION.
10. ALL DISTURBED AREAS, EXCEPT ROADWAYS, WHICH WILL REMAIN OPEN OR UNFINISHED FOR MORE THAN 10 DAYS SHALL BE TEMPORARILY SEEDED WITH 1/2 LB. OF RYE GRASS OR MULCHED WITH 100 LBS. OF STRAW OR HAY PER 1,000 SQUARE FEET. ROADWAYS SHALL BE STABILIZED AS RAPIDLY AS PRACTICABLE BY THE INSTALLATION OF THE BASE COURSE. A TEMPORARY SEEDING AND/ OR MULCHING SHOULD BE APPLIED TO DISTURBED AREAS THAT ARE LEFT FOR 15 DAYS UNLESS CONSTRUCTION WILL BEGIN WITHIN 30 DAYS.
11. SILT THAT LEAVES THE SITE SHALL BE COLLECTED AND REMOVED AS DIRECTED BY APPROPRIATE MUNICIPAL AUTHORITIES.
12. AT THE COMPLETION OF THE PROJECT, ALL TEMPORARY SILTATION DEVICES SHALL BE REMOVED AND THE AFFECTED AREAS RE-GRADED, PLANTED, OR TREATED IN ACCORDANCE WITH THE APPROVED PLANS.
13. ALL AREAS DISTURBED BY ON-SITE GRADING, THAT WILL NOT BE CONSTRUCTED UPON, SHALL BE STABILIZED WITH PERMANENT VEGETATIVE COVER, USING THE FOLLOWING SEEDING SCHEDULE, OR EQUIVALENT:

	1 LB. PER ACRE	1 LB. PER 1,000 SF
KENTUCKY BLUE GRASS –	20	0.45
CREEPING RED FESCUE	20	0.45
PERENNIAL RYE GRASS –	5	0.10

14. ALL SEEDED AREAS TO HAVE AN APPLICATION OF THE FOLLOWING:
    LIME – AMOUNT NEEDED TO OBTAIN A pH OF 5.5
    FERTILIZER – 15 LBS. PER 1,000 SF OF 10-20-10 FERTILIZER OR APPROVED EQUAL.
    IF NOT LANDSCAPED OTHERWISE, ALL NEW CONSTRUCTED STEEP PERMANENT SLOPED LESS THEN 1 (VERTICAL) : 2.5 (HORIZONTAL) TO BE SEEDED WITH THE FOLLOWING:

	1 LB. PER ACRE	1 LB. PER 1,000 SF
CREEPING RED FESCUE –	10	0.45
CROWN VETCH –	15	0.35
BIRDSFOOT TREFOIL –	8	0.20
TALL FESCUE OR SMOOTH BROMEGRASS –	15	0.35
W/PERENNIAL RYE GRASS –	5	0.10

15. ALL SLOPES 1 (VERTICAL) : 2.5 (HORIZONTAL) TO BE MULCHED AND STABILIZED WITH CLOTH FABRIC AND PINNED TO THE GROUND.
16. SOD CAN BE USED INSTEAD OF SEED.

CONSTRUCTION SEQUENCE:
a. CONSTRUCT STABILIZING CONSTRUCTION ENTRANCE.
b. INSTALL SEDIMENT BARRIERS AS PER NOTE 1 ABOVE.
c. CONSTRUCT DIVERSIONS SWALES AND DRAINAGE SYSTEMS WITH MINIMUM NECESSARY CLEARING.
d. CLEAR EXISTING TREES AND VEGETATION FROM AREAS TO BE EXCAVATED OR FILLED, STRIP AND STOCKPILE TOPSOIL FROM ALL AREAS TO BE DISTURBED.
e. PERFORM NECESSARY EXCAVATION OR FILL OPERATIONS TO BRING SITE TO DESIRED SUBGRADE. INSTALL STORM DRAINAGE SYSTEM.
f. INSTALL SEDIMENT CONTROL BARRIERS AROUND ALL STORM DRAIN INLETS.
g. SEED ALL DISTURBED AREAS WHICH WILL REMAIN UNDISTURBED FOR A PERIOD OR 30 DAYS AS PER NOTE 2 ABOVE.
h. AFTER COMPLETION OF THE SITE CONSTRUCTION FINE GRADE AND SPREAD TOPSOIL ON ALL LAWN AREAS AND SEED AS PER NOTES 5 AND 6 ABOVE.
i. REMOVE SEDIMENT BARRIERS AS PER NOTE 4 ABOVE.
j. MAINTAIN ALL SEEDED AND PLANTED AREAS TO INSURE A VIABLE STABILIZED VEGETATIVE SPECS.

9. ALL CONSTRUCTION TO MEET CURRENT VILLAGE SPECS.
10. 4" OF TOP SOIL TO BE SPREAD PRIOR TO SEEDING IN ALL DISTURBED AREAS.

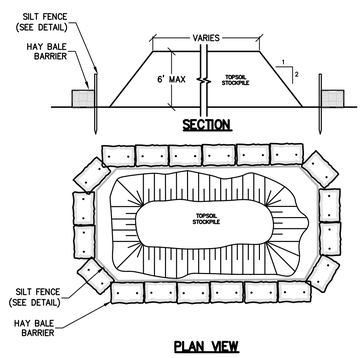

SOIL STOCKPILE SEDIMENT BARRIER
N.T.S.

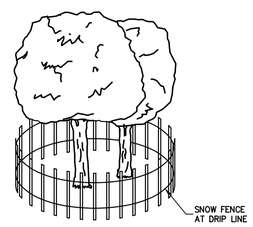

NOTE:
PROVIDE PROTECTION FOR TREES TO REMAIN WITHIN THE LIMIT OF DISTURBANCE

TREE PROTECTION DETAIL
N.T.S.

REV	DESCRIPTION	BY	DATE
6	PER PB COMMENTS	ZK	11/21/17
5	PER PB COMMENTS	AP	10/20/17
4	PER PB COMMENTS	AP	9/18/17
3	SITE PLAN SUBMISSION	AP	8/16/17
2	AS PER COMMENTS	AP	5/17/17
1	AS PER PB COMMENTS	AP	1/24/17

BROOKER ENGINEERING, PLLC
PROFESSIONAL ENGINEERS AND LAND SURVEYORS
LAND DEVELOPMENT • MUNICIPAL • STRUCTURAL • HYDROLOGICAL • SURVEYING
www.BrookerEngineering.com
74 Lafayette Avenue, Suite 501
Suffern, NY 10901
(845) 357-4411
46 N. Central Avenue
Ramsey, NJ 07446
(201) 684-1221

PROJECT:
MONTEBELLO CROSSING
VILLAGE OF MONTEBELLO
ROCKLAND COUNTY
NEW YORK

TITLE:
SEDIMENT AND EROSION CONTROL DETAILS

STATE OF NEW YORK · BRIAN A. BROOKER · 60229 · LICENSED PROFESSIONAL ENGINEER

BRIAN A. BROOKER,
PROFESSIONAL ENGINEER
N.Y.S. Lic. No. 60229

PROJECT NO:	DRAWN:	CHECKED:
13082	Z.K.	B.B.

SCALE: AS SHOWN
GRAPHIC SCALE: 0 40' 80'
DATE: 5/27/2016
DRAWING NO: 5A

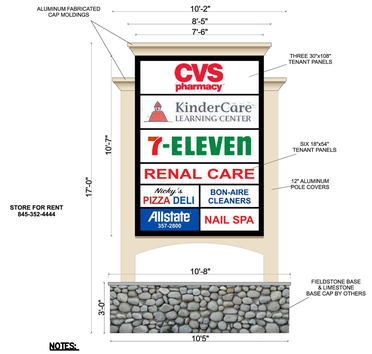

NOTES:

1. FABRICATE & INSTALL ONE DOUBLE FACED INTERNALLY ILLUMINATED PYLON SIGN AS SHOWN.
2. COLORS: DARK GREEN CABINET, POSTS, SKIRT, & CAP MOLDINGS.

SIGN DETAIL #1
N.T.S.

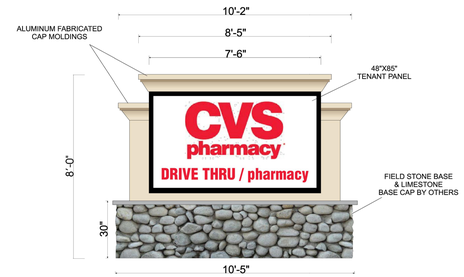

NOTES:

1. FABRICATE & INSTALL ONE DOUBLE FACED INTERNALLY ILLUMINATED MONUMENT SIGN AS SHOWN.
2. COLORS: DARK GREEN CABINET RED GRAPHICS ON WHITE FACE.

SIGN DETAIL #2
N.T.S.

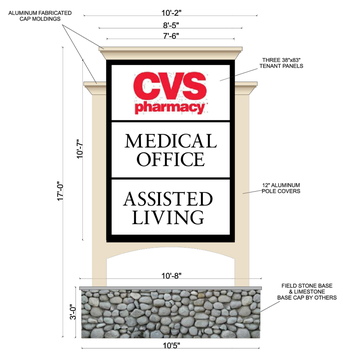

NOTES:

1. FABRICATE & INSTALL ONE DOUBLE FACED INTERNALLY ILLUMINATED PYLON SIGN AS SHOWN.
2. COLORS: DARK GREEN CABINET, POSTS, SKIRT, & CAP MOLDINGS.

SIGN DETAIL #3
N.T.S.

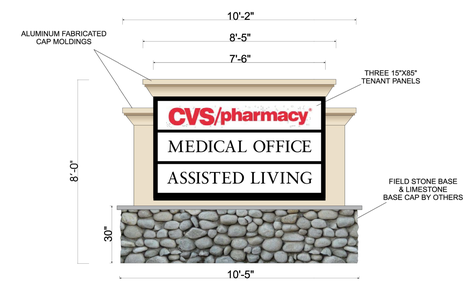

NOTES:

1. FABRICATE & INSTALL ONE DOUBLE FACED INTERNALLY ILLUMINATED MONUMENT SIGN AS SHOWN.
2. COLORS: DARK GREEN CABINET RED & BLACK GRAPHICS ON WHITE FACE.

SIGN DETAIL #4
N.T.S.

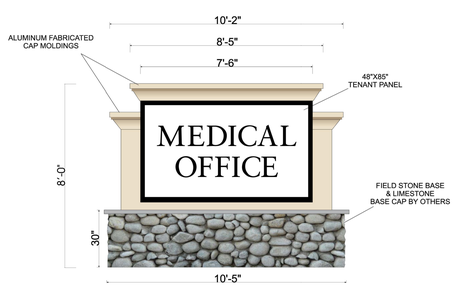

NOTES:

1. FABRICATE & INSTALL ONE DOUBLE FACED INTERNALLY ILLUMINATED MONUMENT SIGN AS SHOWN.
2. COLORS: DARK GREEN CABINET BLACK GRAPHICS ON WHITE FACE.

SIGN DETAIL #5
N.T.S.

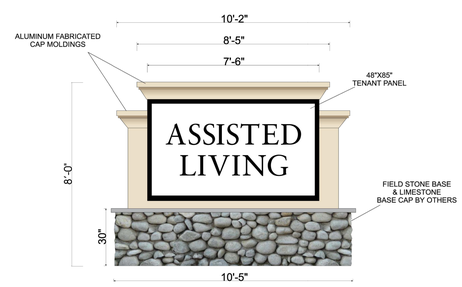

NOTES:

1. FABRICATE & INSTALL ONE DOUBLE FACED INTERNALLY ILLUMINATED MONUMENT SIGN AS SHOWN.
2. COLORS: DARK GREEN CABINET BLACK GRAPHICS ON WHITE FACE.

SIGN DETAIL #6
N.T.S.

REV	DESCRIPTION	BY	DATE
6	PER PB COMMENTS	ZK	11/21/17
5	PER PB COMMENTS	AP	10/20/17
4	PER PB COMMENTS	AP	9/18/17
3	SITE PLAN SUBMISSION	AP	8/16/17
2	AS PER COMMENTS	AP	5/17/17
1	AS PER PB COMMENTS	AP	1/24/17

BROOKER ENGINEERING, PLLC
PROFESSIONAL ENGINEERS AND LAND SURVEYORS
LAND DEVELOPMENT • MUNICIPAL • STRUCTURAL • HYDROLOGICAL • SURVEYING
www.BrookerEngineering.com
74 Lafayette Avenue, Suite 501
Suffern, NY 10901
(845) 357-4411
46 N. Central Avenue
Ramsey, NJ 07446
(201) 684-1221

PROJECT:
MONTEBELLO CROSSING
VILLAGE OF MONTEBELLO
ROCKLAND COUNTY
NEW YORK

TITLE:
SIGNAGE PLAN

STATE OF NEW YORK · BRIAN A. BROOKER · 60229 · LICENSED PROFESSIONAL ENGINEER

BRIAN A. BROOKER,
PROFESSIONAL ENGINEER
N.Y.S. Lic. No. 60229

PROJECT NO:	DRAWN:	CHECKED:
13082	Z.K.	B.B.

SCALE: AS SHOWN
GRAPHIC SCALE:

DATE:	DRAWING NO:
5/27/2016	6

P:\BBE\13\13082_Dwg\Rev 6\SITE PLAN.dwg, 11/21/2017 1:37:35 PM, ZKamm

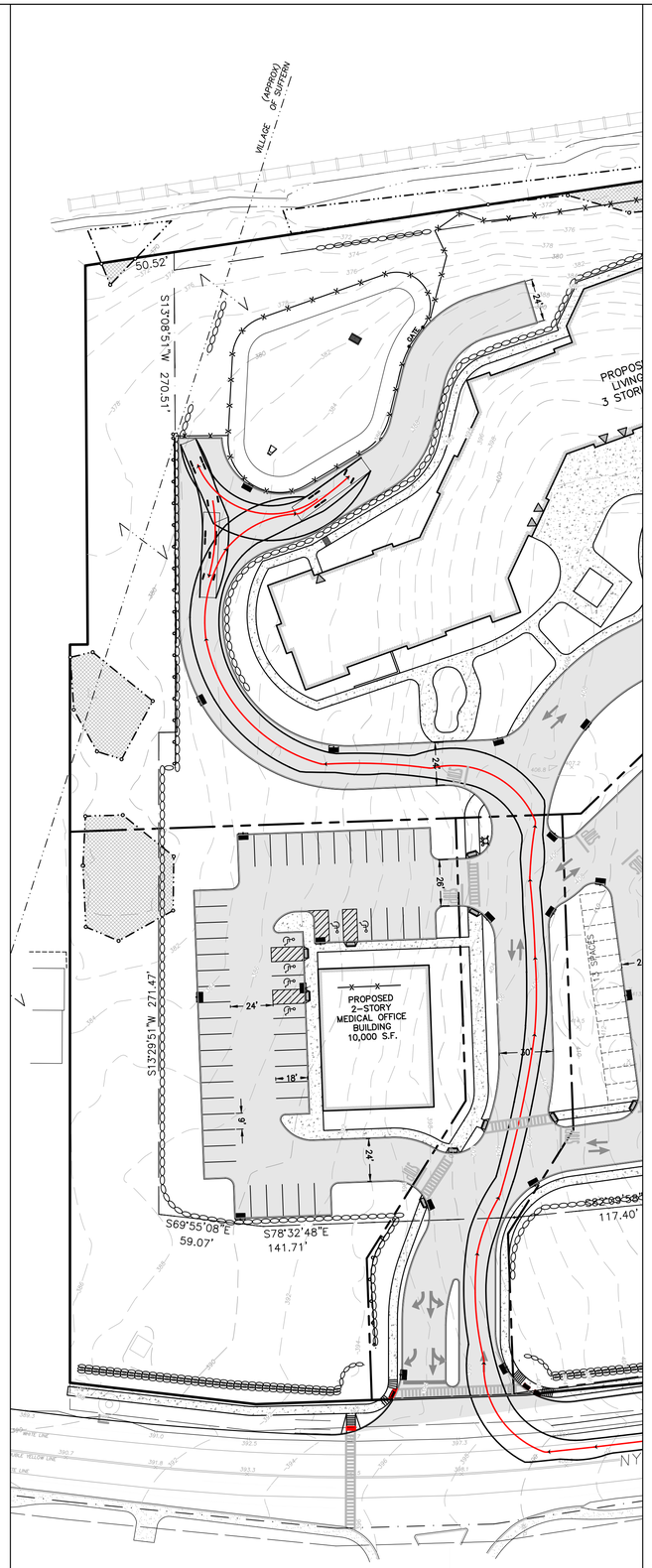

ALR ACCESS FROM ROUTE 59

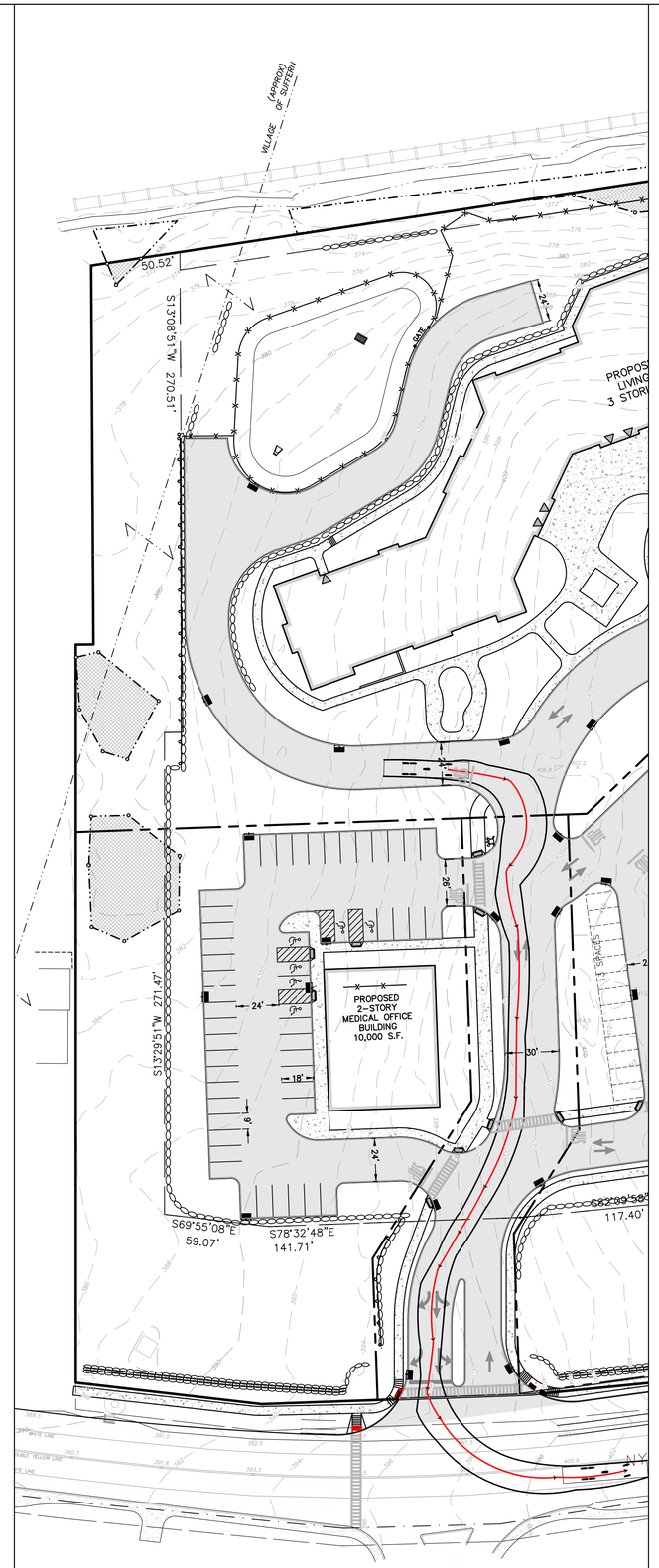

ALR ACCESS OUT TO ROUTE 59

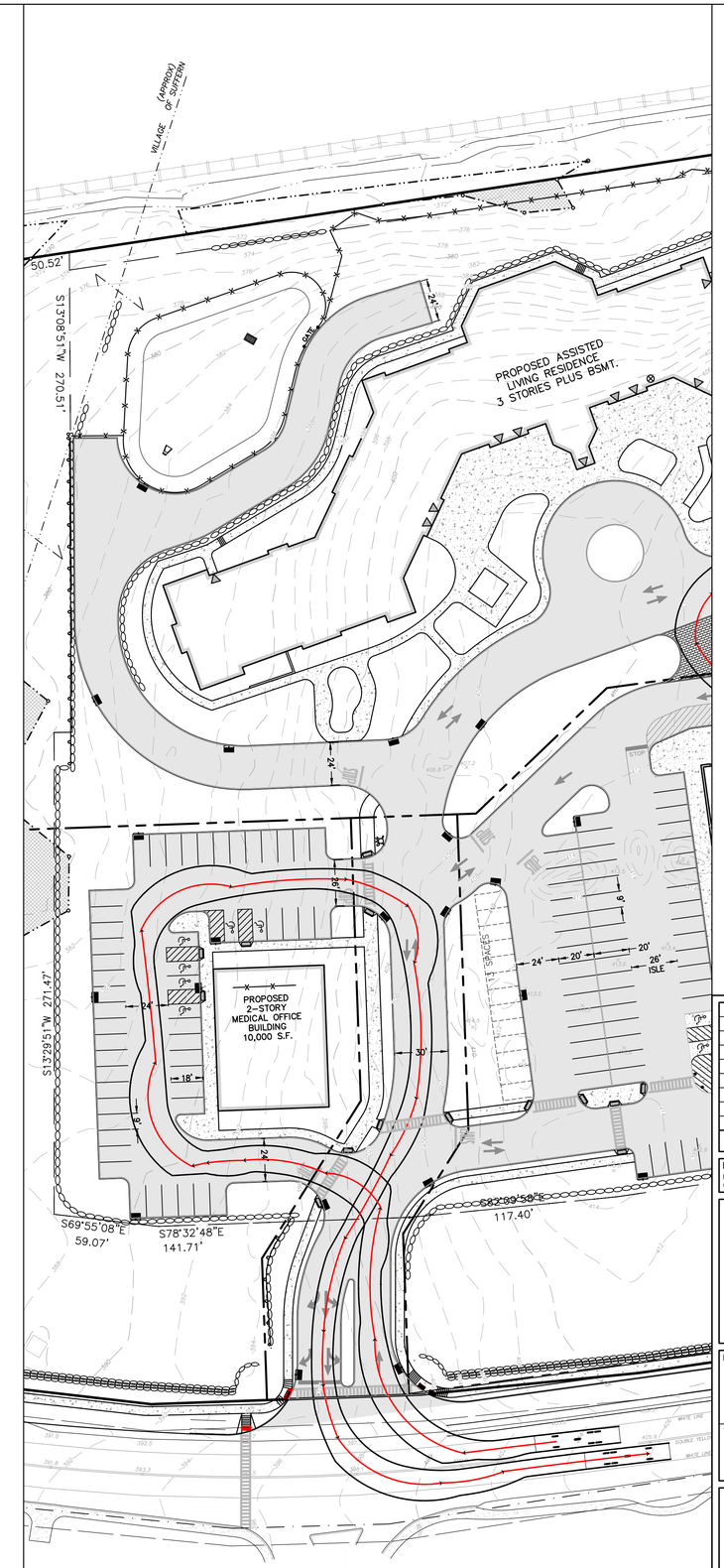

MEDICAL OFFICE ACCESS FROM ROUTE 59

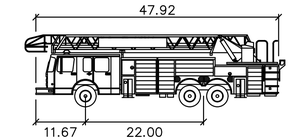

20-TOWER TALLMAN

Width	: 9.17
Track	: 6.91
Lock to Lock Time	: 6.0
Steering Angle	: 45.0

REV	DESCRIPTION	BY	DATE
6	PER PB COMMENTS	ZK	11/21/17
5	PER PB COMMENTS	AP	10/20/17
4	PER PB COMMENTS	AP	9/18/17
3	SITE PLAN SUBMISSION	AP	8/16/17
2	AS PER COMMENTS	AP	5/17/17
1	AS PER PB COMMENTS	AP	1/24/17

DISCLAIMER:
UNAUTHORIZED ALTERATION OR ADDITIONS TO THESE PLANS IS A VIOLATION OF THE N.Y.S. EDUCATION LAW, ARTICLE 145, SECTION 7209, SUBSECTION 2.

BROOKER ENGINEERING, PLLC
PROFESSIONAL ENGINEERS AND LAND SURVEYORS
LAND DEVELOPMENT • MUNICIPAL • STRUCTURAL • HYDROLOGICAL • SURVEYING
www.BrookerEngineering.com
74 Lafayette Avenue, Suite 501
Suffern, NY 10901
(845) 357-4411
46 N. Central Avenue
Ramsey, NJ 07446
(201) 684-1221

PROJECT:
MONTEBELLO CROSSING
VILLAGE OF MONTEBELLO
ROCKLAND COUNTY
NEW YORK

TITLE:
FIRE TRUCK MANEUVERING PLAN (1 OF 3)

STATE OF NEW YORK · BRIAN A. BROOKER · 60229 · LICENSED PROFESSIONAL ENGINEER

BRIAN A. BROOKER,
PROFESSIONAL ENGINEER
N.Y.S. Lic. No. 60229

PROJECT NO:	DRAWN:	CHECKED:
13082	Z.K.	B.B.

SCALE: 1"=40'

GRAPHIC SCALE: 0 40' 80'

DATE: 5/27/2016

DRAWING NO: 7

NOTE: WETLANDS AS LOCATED BY BY ROBERT TORGERSEN, ASLA IN JAN. 2011

AREA WETLAND "A"
TOTAL AREA= 3106 SF
AREA ON SITE= 589 SF

AREA WETLAND "B"
TOTAL AREA= 761 SF
AREA ON SITE= 70 SF

AREA WETLAND "D"
= 1,705 SF
(ISOLATED)

AREA WETLAND "C"
= 2,876 SF
(ISOLATED)

PROPOSED ASSISTED LIVING RESIDENCE
3 STORIES PLUS BSMT.

PROPOSED PHARMACY
14,698 S.F.

PROPOSED 2-STORY MEDICAL OFFICE BUILDING
10,000 S.F.

TAX LOT 55.10-1-3
N/F HEMION HOLDINGS LLC
AREA= 142,271 SF
AREA= 3.266 AC

TAX LOT 55.10-1-4
N OR F DJTS REALTY CO, INC

TAX LOT 55.10-1-5.2
N/F HEMION LAND LEASE LLC

TAX LOT 55.10-1-5.1
N/F INDIAN ROCK LLC

TAX LOT 55.38-1-2
N/F AUGUSTINIAN RECOLLECT OF NEW JERSEY, INC

TAX LOT 55.10-1-1
N/F AUGUSTINIAN RECOLLECT OF NEW JERSEY, INC

TAX LOT 55.38-1-1

GOOD SAMARITAN HOSPITAL ENT

MOUNTABLE CURB

PROPOSED DRIVEWAY
RIGHT IN, RIGHT OUT
ONLY

NYS ROUTE 59
STATE HWY #9000

HEMON ROAD

CAMPBELL AVENUE

FORMER LOCATION OF HEMION RD

NORTH

ALR ACCESS FROM HEMION ROAD TO ROUTE 59

REV	DESCRIPTION	BY	DATE
6	PER PB COMMENTS	ZK	11/21/17
5	PER PB COMMENTS	AP	10/20/17
4	PER PB COMMENTS	AP	9/18/17
3	SITE PLAN SUBMISSION	AP	8/16/17
2	AS PER COMMENTS	AP	5/17/17
1	AS PER PB COMMENTS	AP	1/24/17

DISCLAIMER:
UNAUTHORIZED ALTERATION OR ADDITIONS TO THESE PLANS IS A VIOLATION OF THE N.Y.S. EDUCATION LAW, ARTICLE 145, SECTION 7209, SUBSECTION 2.

BROOKER ENGINEERING, PLLC
PROFESSIONAL ENGINEERS AND LAND SURVEYORS
LAND DEVELOPMENT • MUNICIPAL • STRUCTURAL • HYDROLOGICAL • SURVEYING
www.BrookerEngineering.com
74 Lafayette Avenue, Suite 501
Suffern, NY 10901
(845) 357-4411
46 N. Central Avenue
Ramsey, NJ 07446
(201) 684-1221

PROJECT:
MONTEBELLO CROSSING
VILLAGE OF MONTEBELLO
ROCKLAND COUNTY
NEW YORK

TITLE:
FIRE TRUCK MANEUVERING PLAN (2 OF 3)

STATE OF NEW YORK · BRIAN A. BROOKER · 60229 · LICENSED PROFESSIONAL ENGINEER

BRIAN A. BROOKER,
PROFESSIONAL ENGINEER
N.Y.S. Lic. No. 60229

PROJECT NO:	DRAWN:	CHECKED:
13082	Z.K.	B.B.

SCALE: 1"=40'

GRAPHIC SCALE: 0 40' 80'

DATE: 5/27/2016

DRAWING NO: 8

Z:\ABEL\13\13082_Dwg\Rev 6\SITE PLAN.dwg, 11/21/2017 1:37:47 PM, Zkamm

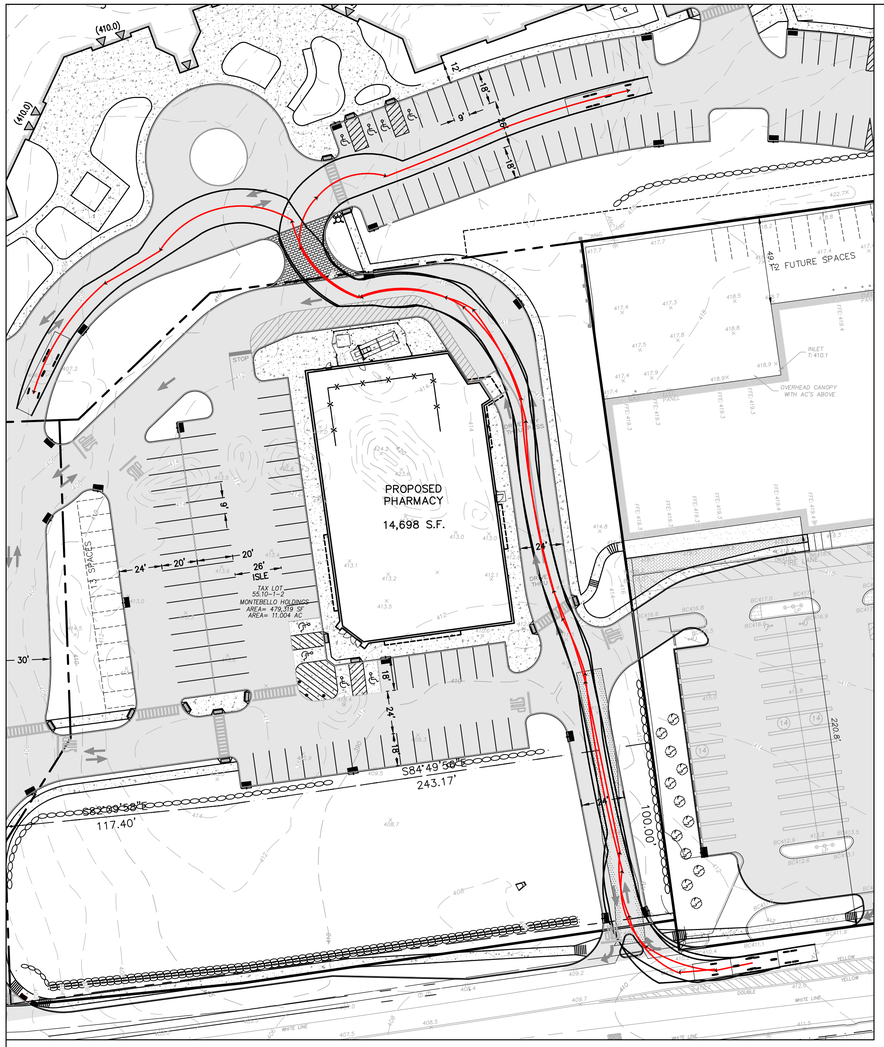

ALR ACCESS TROUGH CVS

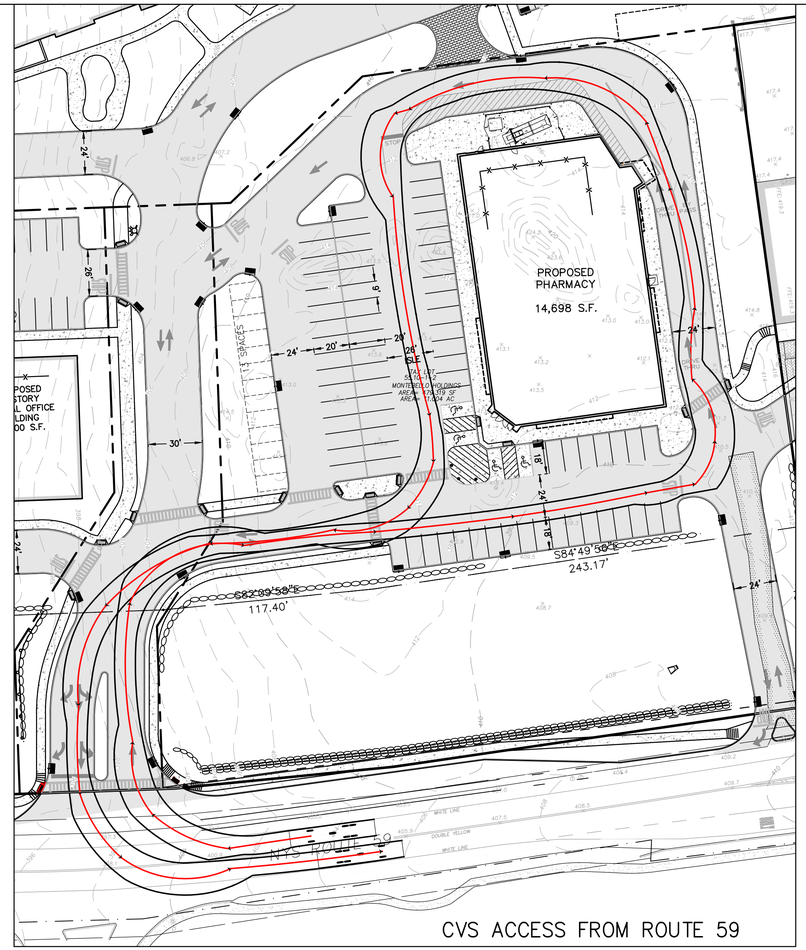

CVS ACCESS FROM ROUTE 59

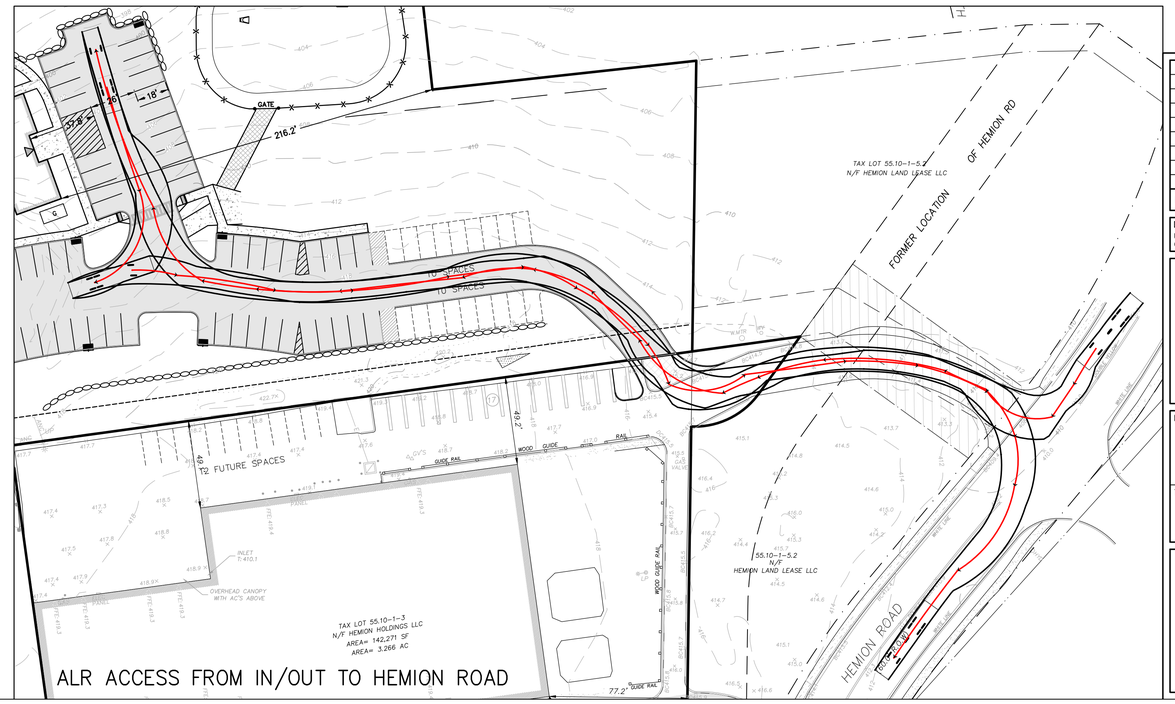

ALR ACCESS FROM IN/OUT TO HEMION ROAD

REV	DESCRIPTION	BY	DATE
6	PER PB COMMENTS	ZK	11/21/17
5	PER PB COMMENTS	AP	10/20/17
4	PER PB COMMENTS	AP	9/18/17
3	SITE PLAN SUBMISSION	AP	8/16/17
2	AS PER COMMENTS	AP	5/17/17
1	AS PER PB COMMENTS	AP	1/24/17

DISCLAIMER:
UNAUTHORIZED ALTERATION OR ADDITIONS TO THESE PLANS IS A VIOLATION OF THE N.Y.S. EDUCATION LAW, ARTICLE 145, SECTION 7209, SUBSECTION 2.

BROOKER ENGINEERING, PLLC
PROFESSIONAL ENGINEERS AND LAND SURVEYORS
LAND DEVELOPMENT • MUNICIPAL • STRUCTURAL • HYDROLOGICAL • SURVEYING
www.BrookerEngineering.com
74 Lafayette Avenue, Suite 501
Suffern, NY 10901
(845) 357-4411
46 N. Central Avenue
Ramsey, NJ 07446
(201) 684-1221

PROJECT:
MONTEBELLO CROSSING
VILLAGE OF MONTEBELLO
ROCKLAND COUNTY
NEW YORK

TITLE:
FIRE TRUCK MANEUVERING PLAN (3 OF 3)

STATE OF NEW YORK · BRIAN A. BROOKER · 60229 · LICENSED PROFESSIONAL ENGINEER

BRIAN A. BROOKER,
PROFESSIONAL ENGINEER
N.Y.S. Lic. No. 60229

PROJECT NO:	DRAWN:	CHECKED:
13082	Z.K.	B.B.

SCALE: 1"=40'
GRAPHIC SCALE: 0 40' 80'
DATE: 5/27/2016
DRAWING NO: 9

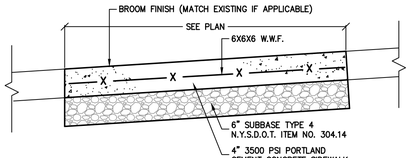

CONCRETE SIDEWALK NOTES

1. FULL DEPTH TRANSVERSE CONSTRUCTION JOINTS SHALL BE PLACED EVERY 18–20 FEET.
2. CONCRETE SURFACE SHALL BE SCORED AND TOOLED EVERY 5 FEET.
3. ALL EDGES SHALL BE FINISHED WITH AN EDGING TOOL WITH A RADIUS OF 1/4 INCH.
4. A 3/4 INCH BITUMINOUS JOINT FILLER SHALL BE PLACED AT ALL JOINTS BETWEEN SIDEWALK, CURB, PAVEMENT, BUILDING, ETC.
5. THE CONCRETE SHALL BE FINISHED TO PRODUCE A SMOOTH FINISH AND THEN LIGHTLY BROOMED TO A UNIFORM TEXTURE.
6. A CLEAR MEMBRANE CURING COMPOUND SHALL BE USED UPON COMPLETION OF FINISHING.
7. ALL SIDEWALKS SHALL ADHERE TO ADA GUIDELINES.

CONCRETE SIDEWALK DETAIL
N.T.S.

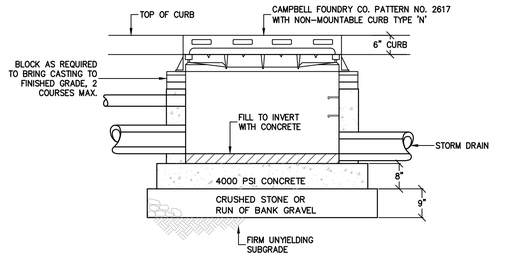

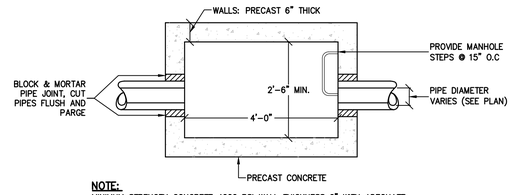

NOTE:
MINIMUM STRENGTH CONCRETE 4000 PSI WALL THICKNESS 6" WITH ADEQUATE STEEL REINFORCEMENT TO WITHSTAND H20 HIGHWAY LOAD AND SOIL LOADS.

CATCH BASIN DETAIL
N.T.S.

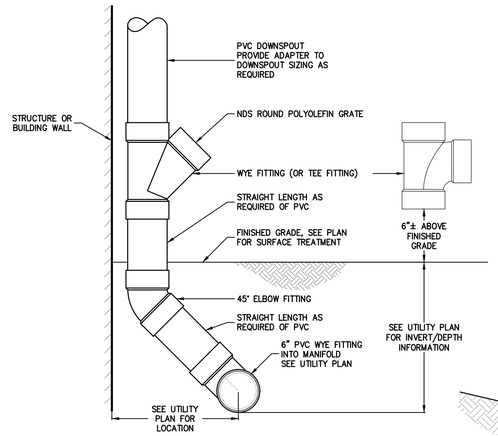

NOTE:
ALL PIPE SHALL BE SDR 35 UNLESS OTHERWISE NOTED.
SEE UTILITY PLAN FOR SIZING.

ROOF LEADER CLEANOUT DETAIL
N.T.S.

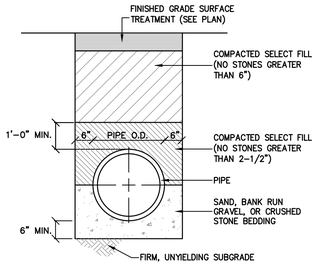

STORM PIPE BEDDING DETAIL
N.T.S.

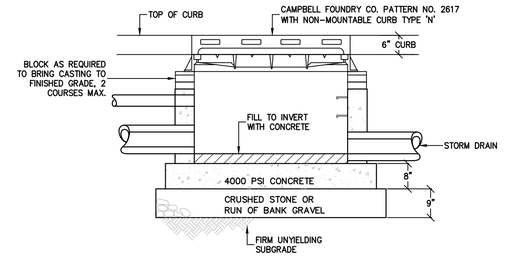

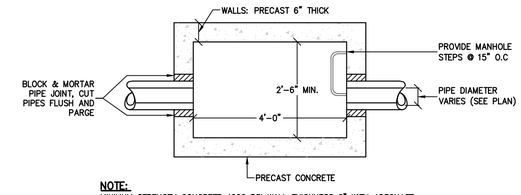

NOTE:
MINIMUM STRENGTH CONCRETE 4000 PSI WALL THICKNESS 6" WITH ADEQUATE STEEL REINFORCEMENT TO WITHSTAND H20 HIGHWAY LOAD AND SOIL LOADS.

CATCH BASIN DETAIL
N.T.S.

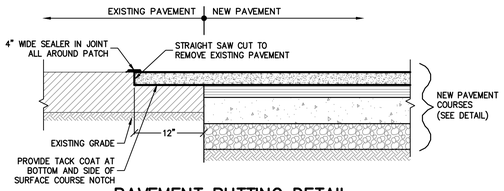

PAVEMENT BUTTING DETAIL
N.T.S.

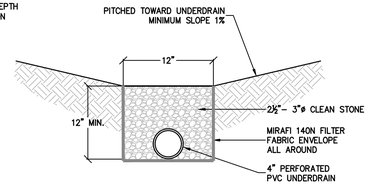

UNDERDRAIN DETAIL
N.T.S.

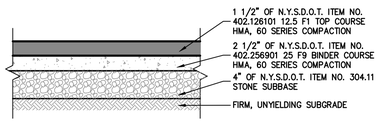

PARKING LOT PAVEMENT SECTION
N.T.S.

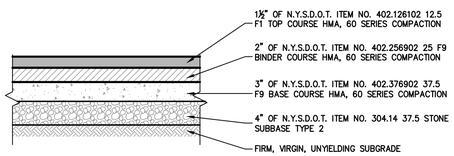

ROAD PAVEMENT SECTION DETAIL
N.T.S.

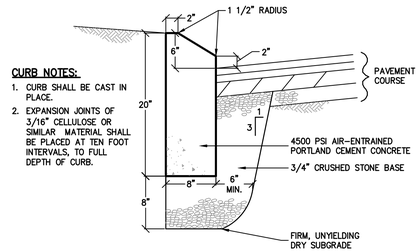

CURB NOTES:
1. CURB SHALL BE CAST IN PLACE.
2. EXPANSION JOINTS OF 3/16" CELLULOSE OR SIMILAR MATERIAL SHALL BE PLACED AT TEN FOOT INTERVALS, TO FULL DEPTH OF CURB.

CONCRETE MOUNTABLE CURB DETAIL
N.T.S.

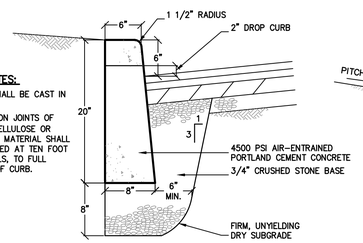

CURB NOTES:
1. CURB SHALL BE CAST IN PLACE.
2. EXPANSION JOINTS OF 3/16" CELLULOSE OR SIMILAR MATERIAL SHALL BE PLACED AT TEN FOOT INTERVALS, TO FULL DEPTH OF CURB.

CONCRETE CURB DETAIL
N.T.S.

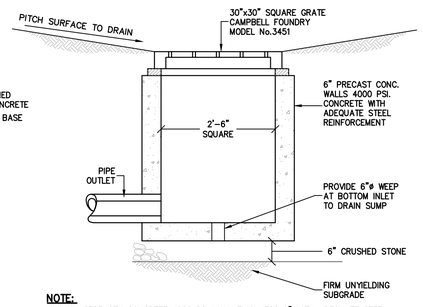

NOTE:
MINIMUM STRENGTH CONCRETE 4000 PSI WALL THICKNESS 6" WITH ADEQUATE STEEL REINFORCEMENT TO WITHSTAND H20 HIGHWAY LOAD AND SOIL LOADS.

YARD DRAIN DETAIL
N.T.S.

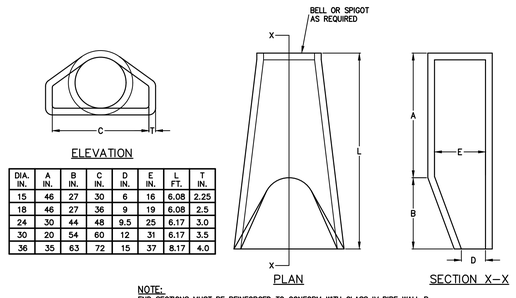

DIA. IN.	A IN.	B IN.	C IN.	D IN.	E IN.	L FT.	T IN.
15	46	27	30	6	16	6.08	2.25
18	46	27	36	9	19	6.08	2.5
24	30	44	48	9.5	25	6.17	3.0
30	20	54	60	12	31	6.17	3.5
36	35	63	72	15	37	8.17	4.0

NOTE:
END SECTIONS MUST BE REINFORCED TO CONFORM WITH CLASS IV PIPE WALL B.

FLARED END SECTION DETAIL
N.T.S.

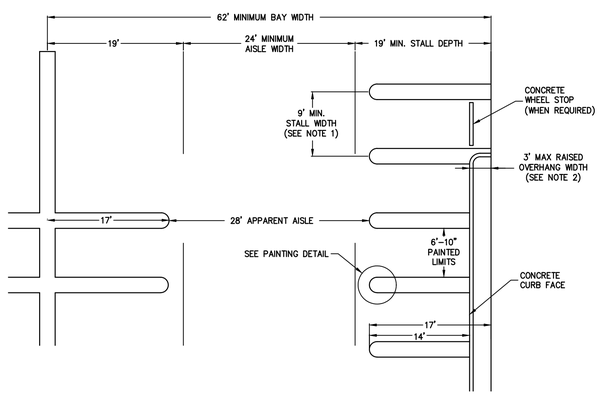

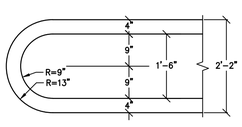

NOTES:
1. THE PANNING BOARD MAY PERMIT 8'-6" STALLS IN ALL DISTRICTS, WHERE SUCH SPACES ARE SPECIFICALLY RESERVED FOR EMPLOYEE.
2. NO MORE THAN TREE FEET OF NON-PAVED AREA ABUTTING A STALL MAY BE COUNTED AS STALL LENGTH PROVIDED A NON-MOUNTABLE CONCRETE CURB, NOT MORE THAN 6" ABOVE GRADE OF PARKING SURFACE, IS PROVIDED. SUCH OVERHANG AREA SHALL NOT BE DEEMED TO MEET ANY WALK OR PLANTING REQUIREMENT.
3. PAINTED LINES TO BE NOT LESS THAN 4" IN WIDTH OF APPROVED EXTERIOR GRADE ROADWAY PAINT.
4. FLAT ENDS INSTEAD OF ROUNDED ENDS ARE PERMISSIBLE.

STANDARD PARKING SPACE AND PAINTING REQUIREMENT DETAIL
N.T.S

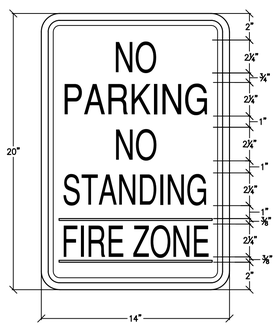

LETTERING AND BORDER – RED
BACKGROUND – WHITE

NO PARKING / NO STANDING SIGN
N.T.S.

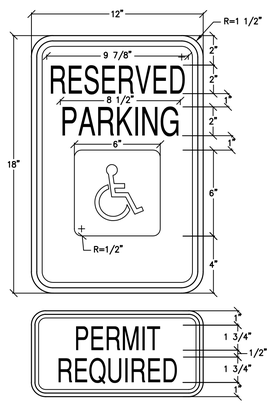

LETTERING AND BORDER – GREEN
WHITE SYMBOL ON BLUE BACKGROUND
BACKGROUND – WHITE

HANDICAP PARKING SIGN
N.T.S.

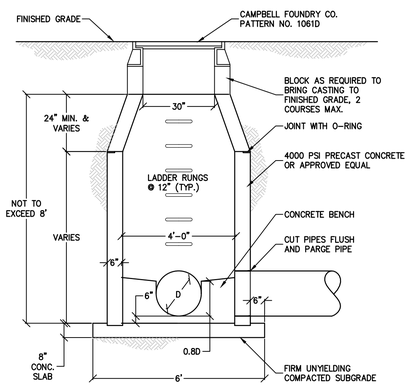

SECTION

NOTE:
MANHOLE REINFORCEMENT, CONCRETE AND FRAME AND CASTING MUST BE CERTIFIED FOR HS20 LOADING

STANDARD STORM MANHOLE DETAIL
N.T.S.

REV	DESCRIPTION	BY	DATE
6	PER PB COMMENTS	ZK	11/21/17
5	PER PB COMMENTS	AP	10/20/17
4	PER PB COMMENTS	AP	9/18/17
3	SITE PLAN SUBMISSION	AP	8/16/17
2	AS PER COMMENTS	AP	5/17/17
1	AS PER PB COMMENTS	AP	1/24/17

DISCLAIMER:
UNAUTHORIZED ALTERATION OR ADDITIONS TO THESE PLANS IS A VIOLATION OF THE N.Y.S. EDUCATION LAW, ARTICLE 145, SECTION 7209, SUBSECTION 2.

BROOKER ENGINEERING, PLLC
PROFESSIONAL ENGINEERS AND LAND SURVEYORS
LAND DEVELOPMENT • MUNICIPAL • STRUCTURAL • HYDROLOGICAL • SURVEYING
www.BrookerEngineering.com
74 Lafayette Avenue, Suite 501
Suffern, NY 10901
(845) 357-4411
46 N. Central Avenue
Ramsey, NJ 07446
(201) 684-1221

PROJECT:
MONTEBELLO CROSSING
VILLAGE OF MONTEBELLO
ROCKLAND COUNTY
NEW YORK

TITLE:
CONSTRUCTION DETAILS (1 OF 4)

STATE OF NEW YORK · BRIAN A. BROOKER · 60229 · LICENSED PROFESSIONAL ENGINEER

BRIAN A. BROOKER,
PROFESSIONAL ENGINEER
N.Y.S. Lic. No. 60229

PROJECT NO:	DRAWN:	CHECKED:
13082	Z.K.	B.B.

SCALE: AS SHOWN
GRAPHIC SCALE:
DATE: 5/27/2016
DRAWING NO: 10

P:\GBE\13\13082_Dwg\Rev 6\SITE PLAN.dwg, 11/21/2017 1:37:55 PM, ZKomm

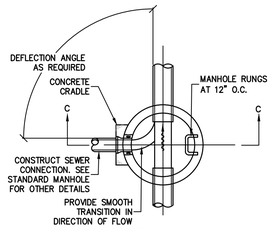

PLAN VIEW

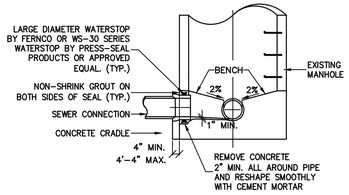

SECTION C–C

NOTES:
1. CLEAN AND ROUGHEN ALL SURFACES AGAINST WHICH NEW MORTAR IS TO BE PLACED.
2. EXIST CONC. TO BE REMOVED TO MEET NEW CHANNEL. CONC. TO BE REMOVED TO A LINE AT LEAST 1–INCH BEYOND FINISHED CHANNEL LINE AND FINISHED OFF TO NEW LINE WITH CEMENT MORTAR.
3. WHERE PIPE IS ABANDONED, PLUG PIPE WITH 12–INCH MIN. CONC. AND BUILDUP CHANNEL TO ELEV OF EXISTING BENCH TO DIVERT FLOW OF NEW MH CHANNEL.
4. THE PIPE PENETRATION MUST NOT BE THROUGH THE CONE SECTION OR A MANHOLE JOINT NOR SHALL IT INTERFERE WITH THE MANHOLE RUNGS.

SEWER CONNECTION TO EXISTING MANHOLE

N.T.S.

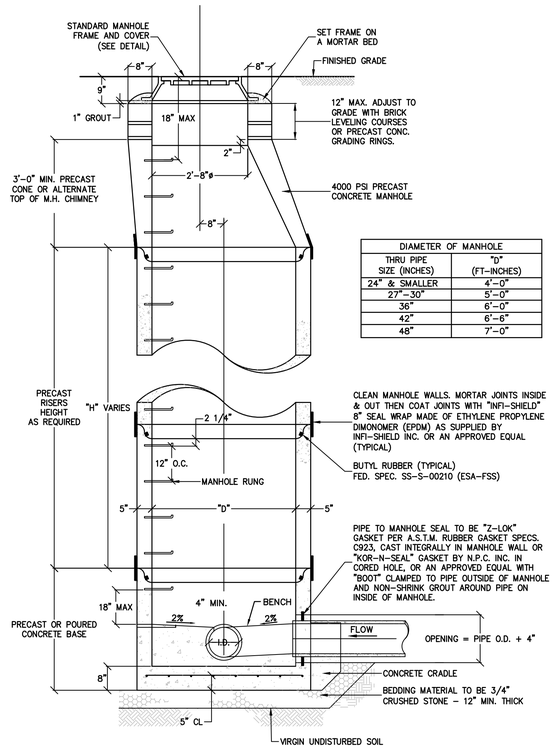

DIAMETER OF MANHOLE	
THRU PIPE SIZE (INCHES)	"D" (FT–INCHES)
24" & SMALLER	4'–0"
27"–30"	5'–0"
36"	6'–0"
42"	6'–6"
48"	7'–0"

PRECAST STANDARD MANHOLE

N.T.S.

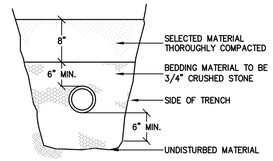

SECTION B–B

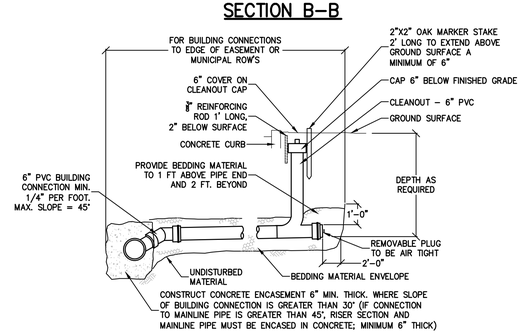

SECTION A–A

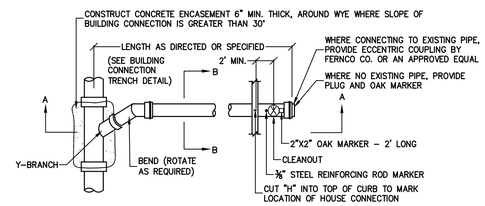

PLAN
BUILDING CONNECTION DETAILS

N.T.S.

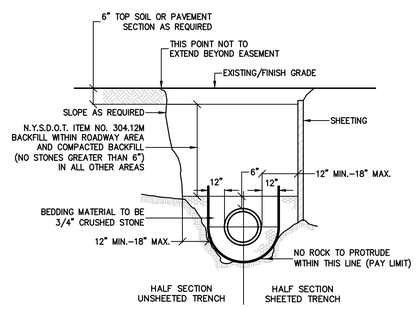

TRENCH IN ROCK DETAIL

N.T.S.

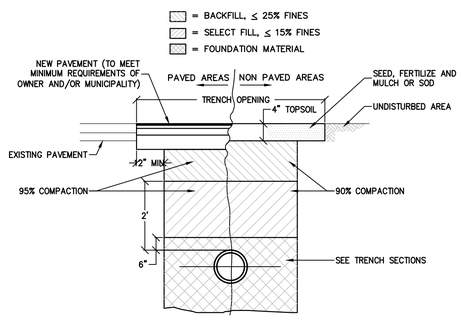

PIPE TRENCH BACKFILL DETAIL

N.T.S.

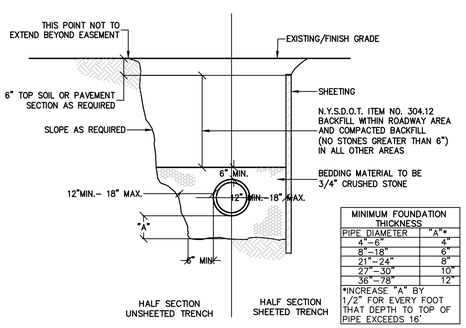

MINIMUM FOUNDATION THICKNESS	
PIPE DIAMETER	"A"*
4"–6"	4"
8"–18"	6"
21"–24"	8"
27"–30"	10"
36"–78"	12"

*INCREASE "A" BY 1/2" FOR EVERY FOOT THAT DEPTH TO TOP OF PIPE EXCEEDS 16'

SANITARY TRENCH IN EARTH DETAIL

N.T.S.

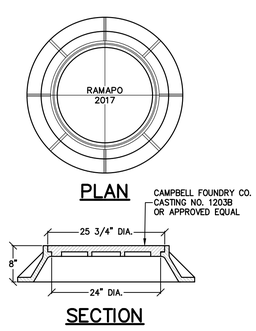

PLAN
SECTION

STANDARD MANHOLE FRAME AND COVER

N.T.S.

REV	DESCRIPTION	BY	DATE
6	PER PB COMMENTS	ZK	11/21/17
5	PER PB COMMENTS	AP	10/20/17
4	PER PB COMMENTS	AP	9/18/17
3	SITE PLAN SUBMISSION	AP	8/16/17
2	AS PER COMMENTS	AP	5/17/17
1	AS PER PB COMMENTS	AP	1/24/17

DISCLAIMER:
UNAUTHORIZED ALTERATION OR ADDITIONS TO THESE PLANS IS A VIOLATION OF THE N.Y.S. EDUCATION LAW, ARTICLE 145, SECTION 7209, SUBSECTION 2.

BROOKER ENGINEERING, PLLC
PROFESSIONAL ENGINEERS AND LAND SURVEYORS
LAND DEVELOPMENT • MUNICIPAL • STRUCTURAL • HYDROLOGICAL • SURVEYING
www.BrookerEngineering.com
74 Lafayette Avenue, Suite 501 Suffern, NY 10901 (845) 357–4411
46 N. Central Avenue Ramsey, NJ 07446 (201) 684–1221

PROJECT:
MONTEBELLO CROSSING
VILLAGE OF MONTEBELLO
ROCKLAND COUNTY
NEW YORK

TITLE:
CONSTRUCTION DETAILS (2 OF 4)

STATE OF NEW YORK · BRIAN A. BROOKER · 60229 · LICENSED PROFESSIONAL ENGINEER

BRIAN A. BROOKER, PROFESSIONAL ENGINEER
N.Y.S. Lic. No. 60229

PROJECT NO:	DRAWN:	CHECKED:
13082	Z.K.	B.B.

SCALE: AS SHOWN
GRAPHIC SCALE:
DATE: 5/27/2016
DRAWING NO: 11

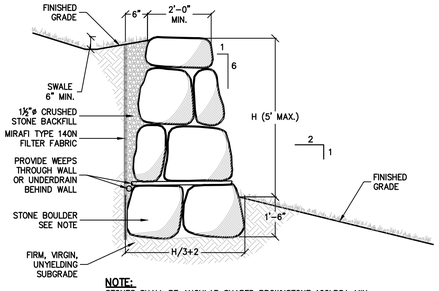

NOTE:
STONES SHALL BE ANGULAR SHAPED BROWNSTONE 100LBS± MIN. HAND PLACED WITH FLATS FACING IN TO RETAINING SOIL. CHINK WITH SMALLER STONES OR MORTAR JOINTS

TYPICAL STONE WALL CROSS SECTION
N.T.S.

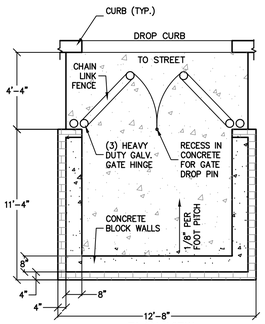

PLAN VIEW

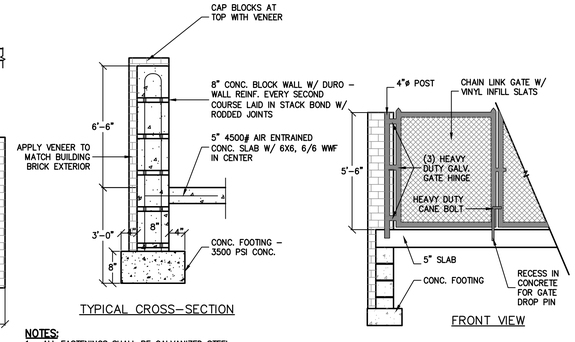

TYPICAL CROSS-SECTION

FRONT VIEW

NOTES:
1. ALL FASTENINGS SHALL BE GALVANIZED STEEL.
2. SPLIT-FACE DECORATIVE BLOCK MAY BE USED IN LIEU OF BRICK-BLOCK COMBINATION. ARCHITECT SHALL APPROVE SAMPLE OF SPLIT-FACE BLOCK

REFUSE CONTAINMENT STRUCTURE DETAILS
N.T.S.

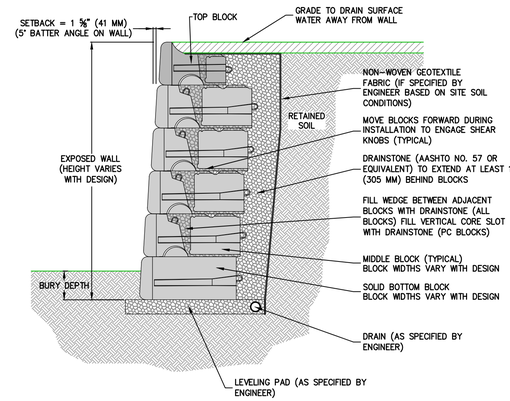

NOTE:
THIS DRAWING IS FOR REFERENCE ONLY. DETERMINATION OF THE SUITABILITY AND/OR MANNER OF USE OF ANY DETAILS CONTAINED IN THIS DOCUMENT IS THE SOLE RESPONSIBILITY OF THE DESIGN ENGINEER OF RECORD. FINAL PROJECT DESIGNS, INCLUDING ALL CONSTRUCTION DETAILS, SHALL BE PREPARED BY A LICENSED PROFESSIONAL ENGINEER USING THE ACTUAL CONDITIONS OF THE PROPOSED SITE.

TYPICAL GRAVITY WALL DETAIL
N.T.S.

RED ROCK
05481 US 31 SOUTH, CHARLEVOIX, MI 49720
(866) 222-8400 ext 3010 • engineering@red-rock.com
www.red-rock.com

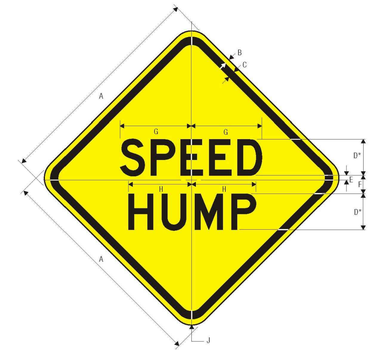

W17-1
SPEED HUMP

*Series 2000 Standard Alphabets.

	A	B	C	D	E	F	G	H	J
	24	.375	.625	4 D	.25	2	7.845	7.045	1.5
C	30	.5	.75	5 D	.5	2.5	9.827	8.826	1.875
	36	.625	.875	6 D	.75	3	11.788	10.588	2.25

COLORS: LEGEND — BLACK
BACKGROUND — YELLOW (RETROREFLECTIVE)

2-133

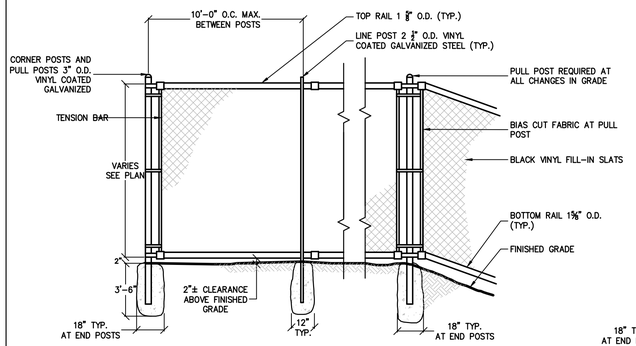

NOTE:
ALL FENCE COMPONENTS SHALL BE DARK HUED VINYL COATED

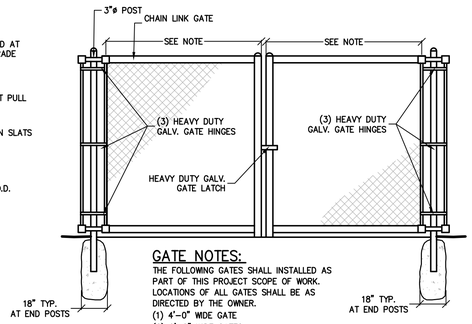

CHAIN LINK FENCE AND GATE DETAILS
N.T.S.

GATE NOTES:
THE FOLLOWING GATES SHALL INSTALLED AS PART OF THIS PROJECT SCOPE OF WORK. LOCATIONS OF ALL GATES SHALL BE AS DIRECTED BY THE OWNER.
(1) 4'-0" WIDE GATE
(2) 6'-0" WIDE GATES
ALL INSTALLED AT 5'-0" HEIGHTS WITH BLACK VINYL FILL-IN SLATS.

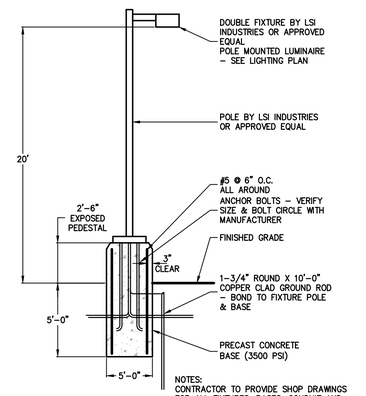

NOTES:
CONTRACTOR TO PROVIDE SHOP DRAWINGS FOR ALL FIXTURES, BASES, CONDUIT AND WIRING FOR THE APPROVAL OF THE ENGINEER.

LUMINAIRE DETAIL
N.T.S.

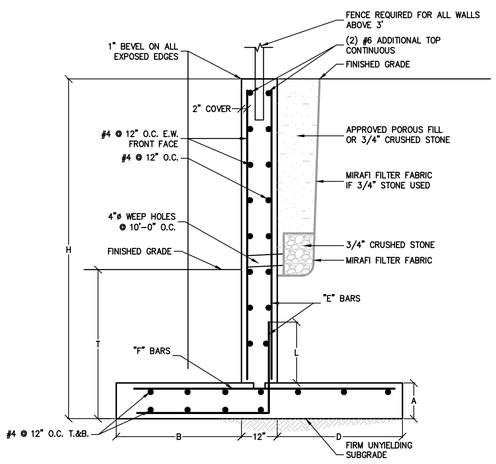

T	H	B	D	'E'-BARS	'F'-BARS	A	L
3'-6"	5'-0"	3'-9"	–	#4 @ 12" O.C.	#4 @ 12" O.C.	1'-0"	1'-6"
3'-6"	6'-0"	4'-9"	–	#4 @ 10" O.C.	#4 @ 12" O.C.	1'-0"	1'-6"
3'-6"	7'-0"	5'-6"	–	#5 @ 12" O.C.	#4 @ 12" O.C.	1'-0"	2'-0"
3'-6"	8'-0"	6'-6"	–	#5 @ 10" O.C.	#4 @ 12" O.C.	1'-0"	2'-0"
3'-6"	9'-0"	6'-6"	1'-0"	#6 @ 12" O.C.	#4 @ 12" O.C.	1'-0"	2'-6"
3'-9"	10'-0"	6'-6"	1'-0"	#6 @ 10" O.C.	#5 @ 12" O.C.	1'-0"	2'-6"
4'-3"	11'-0"	7'-6"	1'-0"	#8 @ 12" O.C.	#5 @ 12" O.C.	1'-0"	2'-6"
4'-6"	12'-0"	9'-3"	1'-0"	#8 @ 8" O.C.	#5 @ 10" O.C.	1'-0"	3'-0"

NOTES:
1. FINAL DESIGN IS SUBJECT TO REVISION OR AMENDMENT BY A PROFESSIONAL ENGINEER BASED ON FIELD CONDITIONS AND INTEGRITY OF EXISTING ROCK AND SOIL PROFILE.
2. WALL CONSTRUCTION METHODOLOGY AND MATERIAL MAY BE SUBSTITUTED FOR THE CONCRETE WALL DESIGN SHOWN, SUBJECT TO DESIGN AND CERTIFICATION BY A NYS LICENSED PROFESSIONAL ENGINEER.
3. WALLS IN PARKING AREAS SHALL BE INSTALLED WITH A GUIDERAIL AND CONCRETE PARKING BLOCK. IN ADDITION, THE TOP OF WALL ELEVATION SHALL BE RAISED BY ONE FOOT ABOVE FINISHED GRADE.
4. SOIL ENGINEER SHALL PERFORM SUBGRADE INSPECTION AS PER NYS CODE CHAPTER 17 TO VERIFY THE FOLLOWING DESIGN CRITERIA:
   γ= 110 PCF, ϕ= 28°, μ= 0.50, q= 3000 PSF

TYPICAL CONCRETE RETAINING WALL
N.T.S.

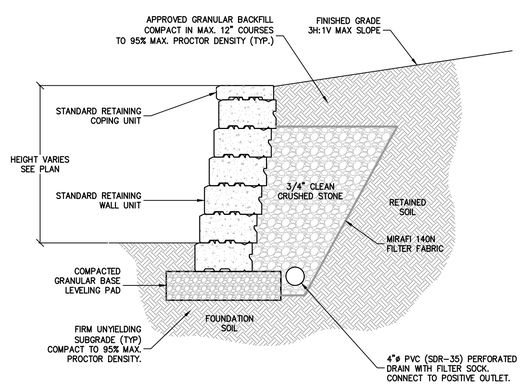

BLOCK RETAINING WALL SYSTEM
N.T.S.

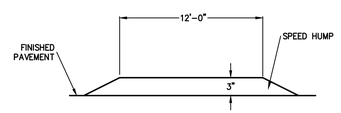

SPEED HUMP DETAIL
N.T.S.

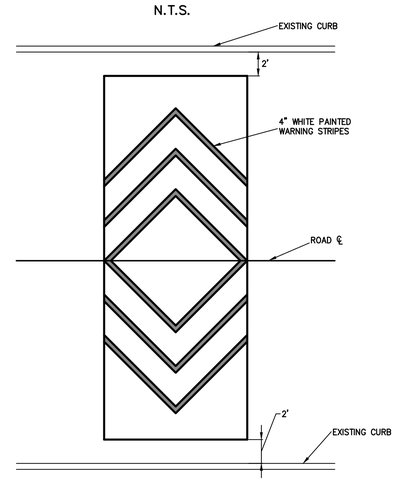

SPEED HUMP PLAN DETAIL
N.T.S.

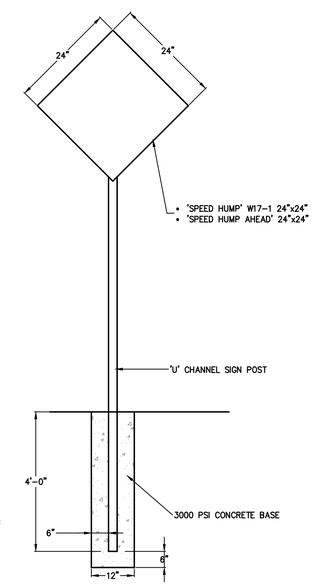

'U' CHANNEL SIGN POST
N.T.S.

REV	DESCRIPTION	BY	DATE
6	PER PB COMMENTS	ZK	11/21/17
5	PER PB COMMENTS	AP	10/20/17
4	PER PB COMMENTS	AP	9/18/17
3	SITE PLAN SUBMISSION	AP	8/16/17
2	AS PER COMMENTS	AP	5/17/17
1	AS PER PB COMMENTS	AP	1/24/17

DISCLAIMER:
UNAUTHORIZED ALTERATION OR ADDITIONS TO THESE PLANS IS A VIOLATION OF THE N.Y.S. EDUCATION LAW, ARTICLE 145, SECTION 7209, SUBSECTION 2.

BROOKER ENGINEERING, PLLC
PROFESSIONAL ENGINEERS AND LAND SURVEYORS
LAND DEVELOPMENT • MUNICIPAL • STRUCTURAL • HYDROLOGICAL • SURVEYING
www.BrookerEngineering.com
74 Lafayette Avenue, Suite 501
Suffern, NY 10901
(845) 357-4411
46 N. Central Avenue
Ramsey, NJ 07446
(201) 684-1221

PROJECT:
MONTEBELLO CROSSING
VILLAGE OF MONTEBELLO
ROCKLAND COUNTY
NEW YORK

TITLE:
CONSTRUCTION DETAILS (3 OF 4)

STATE OF NEW YORK · BRIAN A. BROOKER · 60229 · LICENSED PROFESSIONAL ENGINEER

BRIAN A. BROOKER,
PROFESSIONAL ENGINEER
N.Y.S. Lic. No. 60229

PROJECT NO:	DRAWN:	CHECKED:
13082	Z.K.	B.B.

SCALE: AS SHOWN
GRAPHIC SCALE:

DATE: 5/27/2016
DRAWING NO: 12

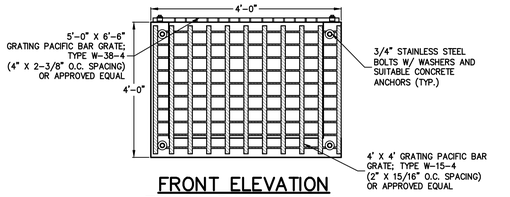

FRONT ELEVATION TRASH RACK DETAIL

N.T.S.

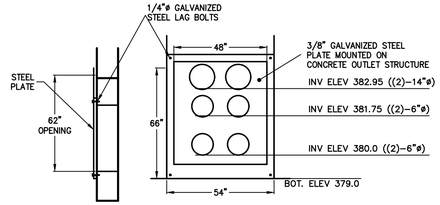

ORIFICE DETAIL

N.T.S.

BASIN NOTES:

1. ALL BERM FILL TO BE COMPACTED TO 95% MODIFIED PROCTOR MINIMUM DENSITY. LOW PERMEABLE SOIL, FREE OF ORGANIC MATERIALS, TO BE UTILIZED IN BERM CONSTRUCTION.
2. SHOP DRAWINGS OF ALL STRUCTURES TO BE SUBMITTED TO THE DESIGN ENGINEER FOR APPROVAL PRIOR TO CONSTRUCTION.

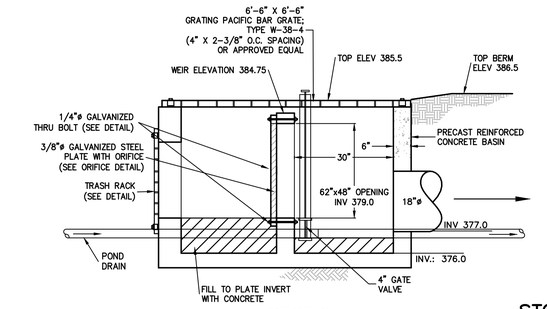

SECTION A–A

N.T.S.

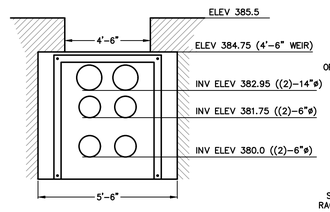

SECTION B–B

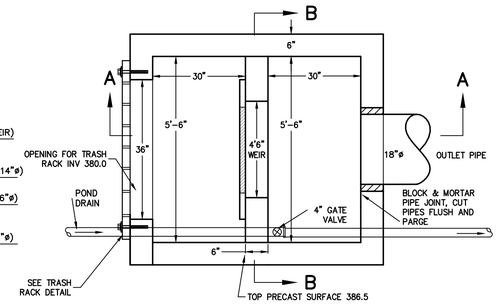

PLAN

STORMWATER BASIN "A" OUTLET STRUCTURE DETAIL

N.T.S.

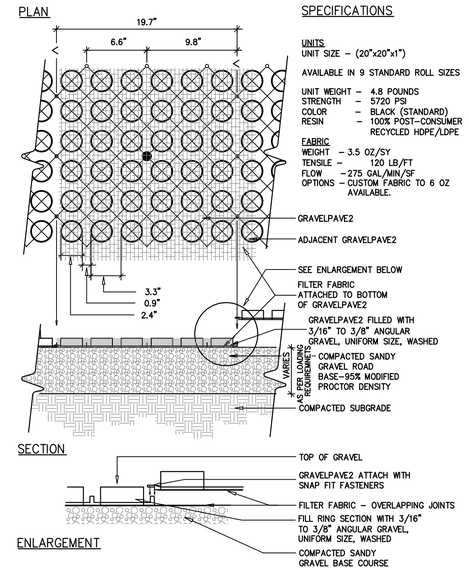

SPECIFICATIONS

UNITS
UNIT SIZE – (20"x20"x1")

AVAILABLE IN 9 STANDARD ROLL SIZES

UNIT WEIGHT – 4.8 POUNDS
STRENGTH – 5720 PSI
COLOR – BLACK (STANDARD)
RESIN – 100% POST-CONSUMER RECYCLED HDPE/LDPE

FABRIC
WEIGHT – 3.5 OZ/SY
TENSILE – 120 LB/FT
FLOW – 275 GAL/MIN/SF
OPTIONS – CUSTOM FABRIC TO 6 OZ AVAILABLE.

TYPICAL GRASS PAVE DETAIL

N.T.S.

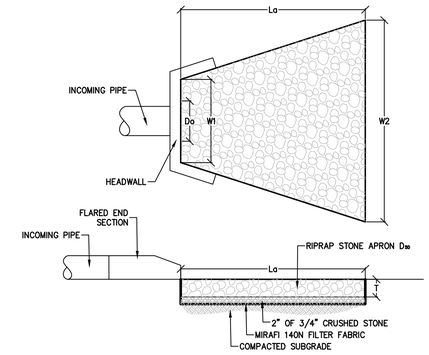

DIMENSION							
	LABEL	Do	W1	W2	La	D_{50}	T
POND A							
REQUIRED	FES A	18"	4.5'	19.5'	18'	6"	14"
PROVIDED	FES A	18"	5.0'	20.0'	20'	6"	14"
POND B							
REQUIRED	FES B	18"	4.5'	9.5'	8'	6"	14"
PROVIDED	FES B	18"	5.0'	11'	10'	6"	14"

NOTE:
RIP-RAP APRON SPECIFIED IS THE MINIMUM SIZING REQUIREMENT PER NEW YORK GUIDELINES FOR URBAN EROSION AND SEDIMENT CONTROL. ADJUST APRON TO FILL ENTIRE FOREBAY OF PROPOSED WATER QUALITY BASIN

RIP RAP OUTLET PROTECTION DETAIL

N.T.S.

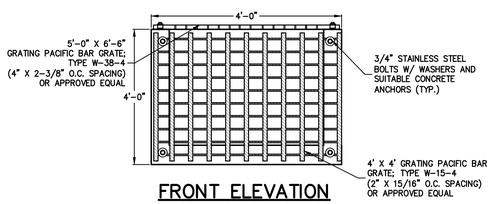

FRONT ELEVATION TRASH RACK DETAIL

N.T.S.

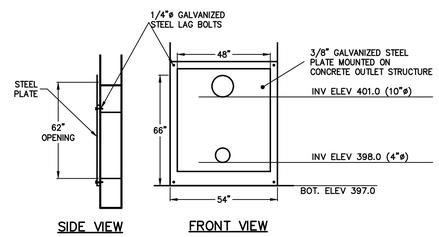

ORIFICE DETAIL

N.T.S.

BASIN NOTES:

1. ALL BERM FILL TO BE COMPACTED TO 95% MODIFIED PROCTOR MINIMUM DENSITY. LOW PERMEABLE SOIL, FREE OF ORGANIC MATERIALS, TO BE UTILIZED IN BERM CONSTRUCTION.
2. SHOP DRAWINGS OF ALL STRUCTURES TO BE SUBMITTED TO THE DESIGN ENGINEER FOR APPROVAL PRIOR TO CONSTRUCTION.

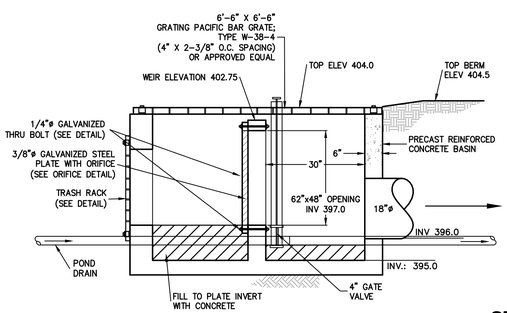

SECTION A–A

N.T.S.

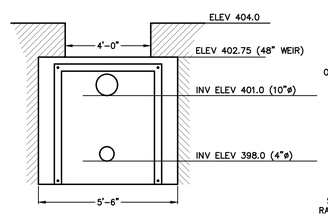

SECTION B–B

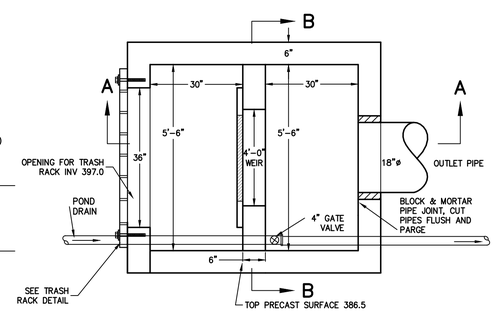

PLAN

STORMWATER BASIN "B" OUTLET STRUCTURE DETAIL

N.T.S.

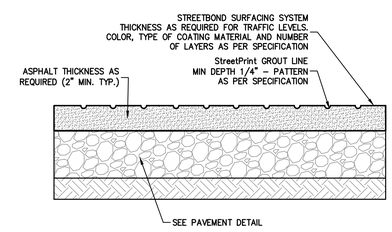

NOTE:
ACTUAL BASE AND PAVEMENT LAYER THICKNESSES SHOULD BE PROPERLY DESIGNED BY A QUALIFIED PROFESSIONAL

TYPICAL PAVEMENT CROSS-SECTION FOR EMERGENCY ACCESS

StreetPrint

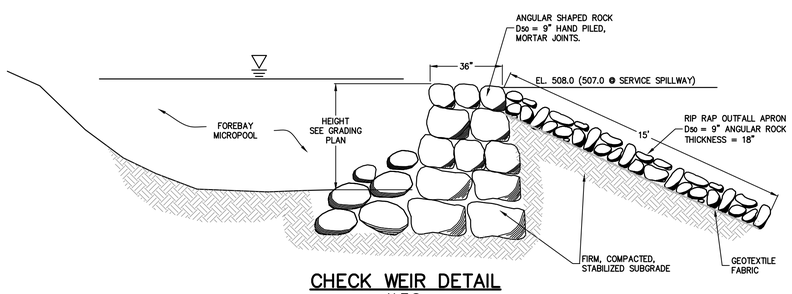

CHECK WEIR DETAIL

N.T.S.

REV	DESCRIPTION	BY	DATE
6	PER PB COMMENTS	ZK	11/21/17
5	PER PB COMMENTS	AP	10/20/17
4	PER PB COMMENTS	AP	9/18/17
3	SITE PLAN SUBMISSION	AP	8/16/17
2	AS PER COMMENTS	AP	5/17/17
1	AS PER PB COMMENTS	AP	1/24/17

BROOKER ENGINEERING, PLLC
PROFESSIONAL ENGINEERS AND LAND SURVEYORS
LAND DEVELOPMENT • MUNICIPAL • STRUCTURAL • HYDROLOGICAL • SURVEYING
www.BrookerEngineering.com
74 Lafayette Avenue, Suite 501
Suffern, NY 10901
(845) 357-4411
46 N. Central Avenue
Ramsey, NJ 07446
(201) 684-1221

PROJECT:
MONTEBELLO CROSSING
VILLAGE OF MONTEBELLO
ROCKLAND COUNTY
NEW YORK

TITLE:
CONSTRUCTION DETAILS (4 OF 4)

STATE OF NEW YORK · BRIAN A. BROOKER · 60229 · LICENSED PROFESSIONAL ENGINEER

BRIAN A. BROOKER,
PROFESSIONAL ENGINEER
N.Y.S. Lic. No. 60229

PROJECT NO:	DRAWN:	CHECKED:
13082	Z.K.	B.B.

SCALE: AS SHOWN
GRAPHIC SCALE:
DATE: 5/27/2016
DRAWING NO: 13

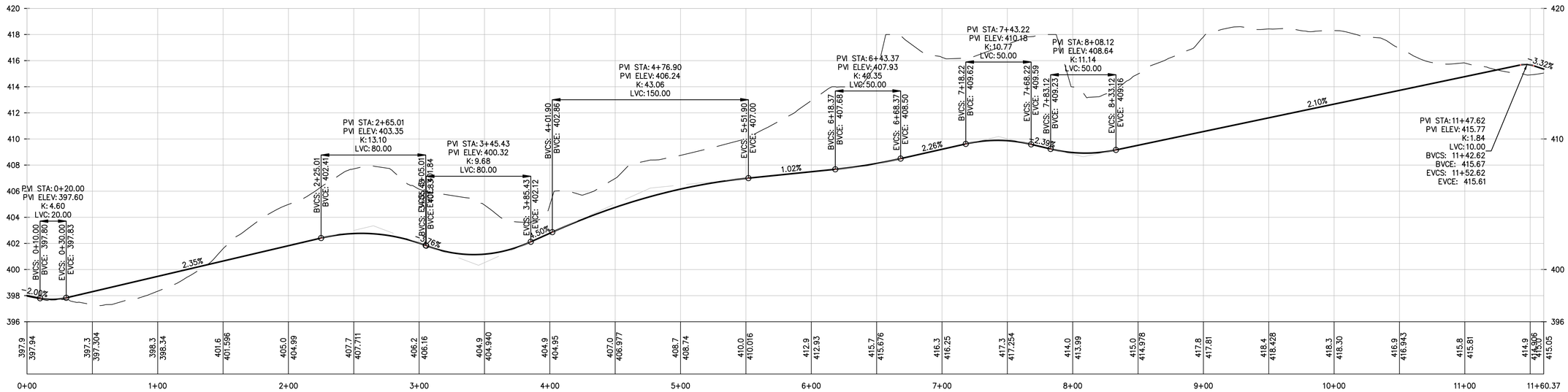

PROFILE
MAIN ACCESS ROAD
SCALE: HORIZ. 1"=40'
SCALE: VERT. 1"=4'

REV	DESCRIPTION	BY	DATE
6	PER PB COMMENTS	ZK	11/21/17
5	PER PB COMMENTS	AP	10/20/17
4	PER PB COMMENTS	AP	9/18/17
3	SITE PLAN SUBMISSION	AP	8/16/17
2	AS PER COMMENTS	AP	5/17/17
1	AS PER PB COMMENTS	AP	1/24/17

BROOKER ENGINEERING, PLLC
PROFESSIONAL ENGINEERS AND LAND SURVEYORS
LAND DEVELOPMENT • MUNICIPAL • STRUCTURAL • HYDROLOGICAL • SURVEYING
www.BrookerEngineering.com
74 Lafayette Avenue, Suite 501
Suffern, NY 10901
(845) 357-4411
46 N. Central Avenue
Ramsey, NJ 07446
(201) 684-1221

PROJECT:
MONTEBELLO CROSSING
VILLAGE OF MONTEBELLO
ROCKLAND COUNTY
NEW YORK

TITLE:
MAIN ACCESS ROAD PROFILE

STATE OF NEW YORK · BRIAN A. BROOKER · 60229 · LICENSED PROFESSIONAL ENGINEER

BRIAN A. BROOKER,
PROFESSIONAL ENGINEER
N.Y.S. Lic. No. 60229

PROJECT NO:	DRAWN:	CHECKED:
13082	Z.K.	B.B.

SCALE: 1"=40'
GRAPHIC SCALE: 0 40' 80'
DATE: 5/27/2016
DRAWING NO: 14

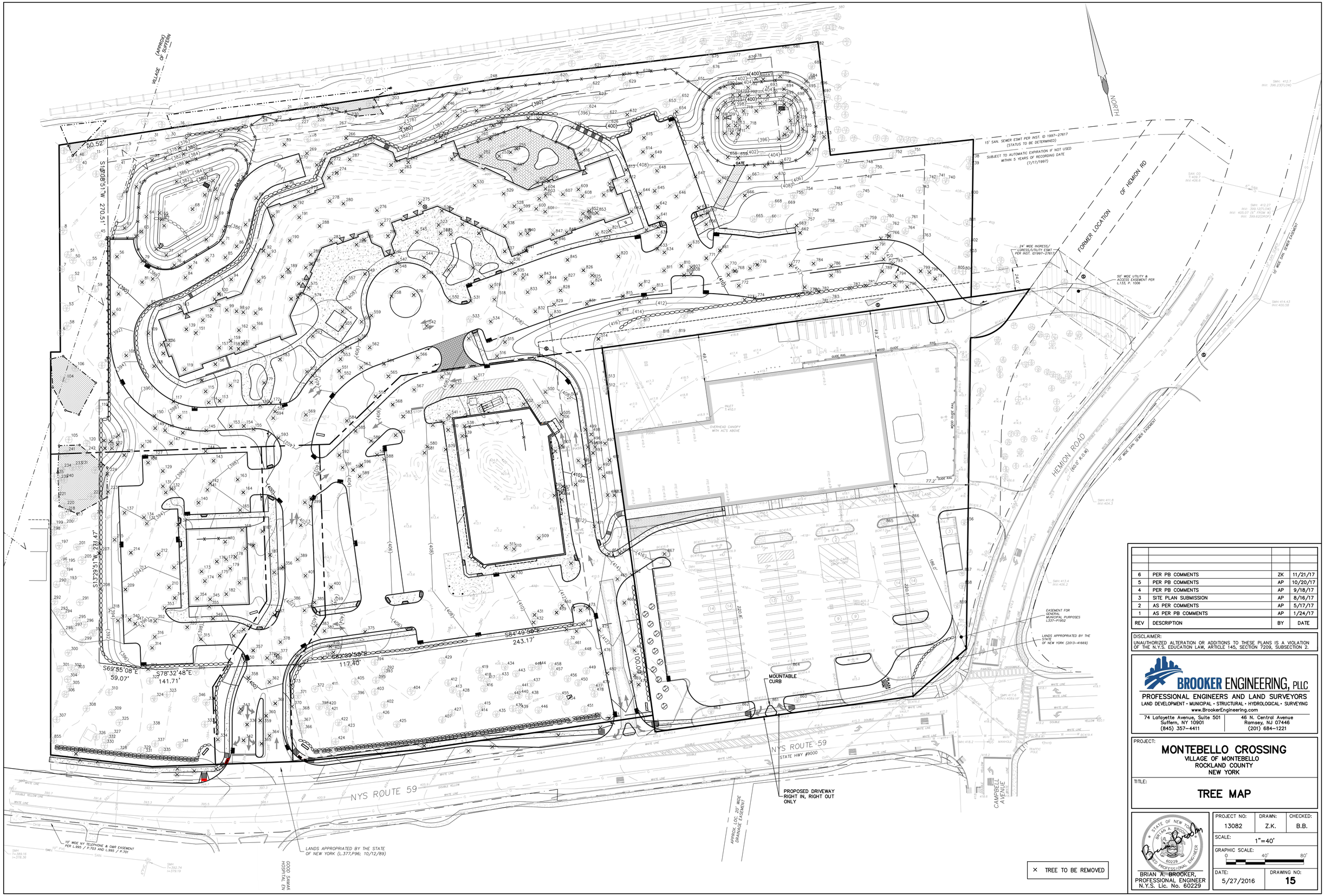

× TREE TO BE REMOVED

REV	DESCRIPTION	BY	DATE
6	PER PB COMMENTS	ZK	11/21/17
5	PER PB COMMENTS	AP	10/20/17
4	PER PB COMMENTS	AP	9/18/17
3	SITE PLAN SUBMISSION	AP	8/16/17
2	AS PER COMMENTS	AP	5/17/17
1	AS PER PB COMMENTS	AP	1/24/17

DISCLAIMER:
UNAUTHORIZED ALTERATION OR ADDITIONS TO THESE PLANS IS A VIOLATION OF THE N.Y.S. EDUCATION LAW, ARTICLE 145, SECTION 7209, SUBSECTION 2.

BROOKER ENGINEERING, PLLC
PROFESSIONAL ENGINEERS AND LAND SURVEYORS
LAND DEVELOPMENT • MUNICIPAL • STRUCTURAL • HYDROLOGICAL • SURVEYING
www.BrookerEngineering.com
74 Lafayette Avenue, Suite 501
Suffern, NY 10901
(845) 357-4411
46 N. Central Avenue
Ramsey, NJ 07446
(201) 684-1221

PROJECT:
MONTEBELLO CROSSING
VILLAGE OF MONTEBELLO
ROCKLAND COUNTY
NEW YORK

TITLE:
TREE MAP

STATE OF NEW YORK · BRIAN A. BROOKER · 60229 · LICENSED PROFESSIONAL ENGINEER

BRIAN A. BROOKER,
PROFESSIONAL ENGINEER
N.Y.S. Lic. No. 60229

PROJECT NO:	DRAWN:	CHECKED:
13082	Z.K.	B.B.

SCALE: 1"=40'

GRAPHIC SCALE: 0 40' 80'

DATE: 5/27/2016

DRAWING NO: 15

Tree Number	Tree Type	Tree Size	Tree Condition	Notes	
1	Pine	33"		TBR	
2	Tulip	28"		TBR	
3	Birch	14"		TBR	
4	Birch	9"		TBR	
5	Oak	30"		TBR	
6	Ash	9"		TR	
7	Elm (Twin)	5",10"		TR	
8	Oak	30"		TR	
9	Birch	8"		TR	
10	Birch (Twin)	6",9"		TR	
11	Birch	10"		TR	
12	Birch	10"		TR	
13	Birch	7"		TR	
14	Birch	12"		TR	
15	Maple	9"		TR	
16	Birch	10"		TR	
17	Maple	8"		TR	
18	Birch	14"		TR	
19	Birch	16"		TBR	
20	Birch	10"		TBR	
21	Elm	9"		TBR	
22	Oak	11"		TR	
23	Tulip	34"		TR	
24	Birch	11"		TR	
25	Birch	10"		TBR	
26	Oak	12"		TBR	
27	Oak	8"		TBR	
28	Birch	8"		TBR	
29	Oak	14"		TBR	
30	Hickory	8"		TR	
31	Oak	36"		TR	
32	Maple	8"		TR	
33	Birch	9"		TBR	
34	Birch	10"		TBR	
35	Birch	11"		TBR	
36	Oak	10"		TBR	
37	Oak	8"		TBR	
38	Birch	9"		TBR	
39	Oak	12"		TBR	
40	Birch	8"		TR	
41	Oak	24"		TR	
42	Oak	16"		TBR	
43	Birch	8"		TR	
44	Birch (Triple)	8",8",10"		TR	
45	Oak	17"		TR	
46	Birch	8"		TR	
47	Maple (Triple)	5",5",4"		TR	
48	Birch	8"		TR	
49	Birch	8"		TR	
50	Oak	28"		TR	
51	Oak (Twin)	4",8"		TR	
52	Ash	8"		TR	
53	Oak	12"		TR	
54	Oak	24"		TBR	
55	Birch	8"		TR	
56	Oak	22"		TBR	
57	Birch	12"		TR	
58	Oak	32"		TR	
59	Maple	8"		TR	
60	Oak	18"		TBR	
61	Maple	10"		TBR	
62	Maple	10"		TBR	
63	Birch	8"		TBR	
64	Birch	8"		TBR	
65	Birch	8"		TBR	
66	Birch	14"		TBR	
67	Birch (Twin)	10"		TBR	
68	Oak	38"		TBR	
69	Birch	8"		TBR	
70	Oak	10"		TBR	
71	Oak	10"		TBR	
72	Birch	10"		TBR	
73	Oak	18"		TBR	
74	Hickory	16"		TBR	
75	Oak	12"		TBR	
76	Oak	10"		TBR	
77	Maple (Twin)	6",8"		TBR	
78	Oak	8"		TBR	
79	Maple	9"		TBR	
80	Birch	15"		TBR	
81	Beech	9"		TBR	
82	Oak	24"		TBR	
83	Birch	9"		TBR	
84	Birch	12"		TBR	
85	Birch	12"		TBR	
86	Oak	9"		TBR	
87	Oak	10"		TBR	
88	Oak	26"		TBR	
89	Oak	18"		TBR	
90	Oak	10"		TBR	
91	Oak	8"		TBR	
92	Hickory	9"		TBR	
93	Oak	20"		TBR	
94	Oak	12"		TBR	
95	Oak	28"		TBR	
96	Oak	14"		TBR	
97	Oak	14"		TBR	
98	Oak	16"		TBR	
99	Oak	16"		TBR	
100	Oak	8"		TBR	
101	Oak	14"		TBR	
102	Oak	9"		TBR	
103	Oak	10"		TBR	
104	Elm	10"		TR	
105	Elm	8"		TR	
106	Oak	20"		TR	
107	Birch	8"		TR	
108	Oak	32"		TBR	
109	Elm	9"		TBR	
110	Oak	28"		TR	
111	Ash	8"		TBR	
112	Ash	10"		TBR	
113	Ash	8"		TBR	
114	Tulip	40"		TBR	
115	Ash	8"		TBR	
116	Birch (Twin)	8",7"		TBR	
117	Oak	14"		TBR	
118	Oak	8"		TBR	
119	Ash	8"		TBR	
120	Maple	10"		TR	
121	Maple	10"		TBR	
122	Elm	8"		TBR	
123	Ash	8"		TBR	
124	Oak	21"		TBR	
125	Ash	8"		TBR	
126	Hickory	18"		TBR	
127	Oak	24"		TBR	
128	Ash	8"		TBR	
129	Ash	8"		TBR	
130	Tulip	10"		TBR	
131	Maple	14"		TBR	
132	Oak	22"		TBR	
133	Ash	8"		TBR	
134	Hickory	17"		TBR	
135	Maple	8"		TBR	
136	Tulip	16"		TBR	
137	Maple	8"		TBR	
138	Maple	8"		TBR	
139	Maple	8"		TBR	
140	Maple	36"		TBR	
141	Maple	10"		TBR	
142	Maple	8"		TBR	
143	Maple	8"		TBR	
144	Oak	8"		TBR	
145	Oak	32"		TBR	
146	Elm	10"		TBR	
147	Oak	24"		TBR	
148	Ash	10"		TBR	
149	Oak	10"		TBR	
150	Maple	8"		TBR	
151	Oak	24"		TBR	
152	Oak	8"		TBR	
153	Maple	24"		TBR	
154	Oak	38"		TBR	
155	Maple	28"		TBR	
156	Ash	11"		TBR	
157	Ash	12"		TBR	
158	Ash	8"		TBR	
159	Maple	8"		TBR	
160	Birch	9"		TBR	
161	Oak	9"		TBR	
162	Oak	12"		TBR	
163	Maple	11"		TBR	
164	Hickory	8"		TBR	
165	Maple	12"		TBR	
166	Cherry	10"		TBR	
167	Maple (Triple)	11"		TBR	
168	Ash	12"		TBR	
169	Oak	10"		TBR	
170	Maple	12"		TBR	
171	Tulip	24"		TBR	
172	Tulip	18"		TBR	
173	Maple (Triple)	10"		TBR	
174	Oak	8"		TBR	
175	Ash	8"		TBR	
176	Sassafrass	10"		TBR	
177	Sassafrass	10"		TBR	
178	Maple	8"		TBR	
179	Ash	10",12"		TBR	
180	Birch	16"		TBR	
181	Maple	8"		TBR	
182	Oak	11"		TBR	
183	Beech	38"	Dead	TBR	
184	Oak	14"		TBR	
185	Ash	9"		TBR	
186	Oak	11"		TBR	
187	Oak	10"		TBR	
188	Pine	16"		TBR	
189	Birch	12"		TBR	
190	Oak	24"		TBR	
191	Tulip	18"		TBR	
192	Maple (Group)			TBR	
193	Oak	16"		TR	
194	Oak	14"		TR	
195	Oak	18"		TR	
196	Oak	12"		TR	
197	Oak	22"		TR	
198	Oak	24"		TR	
199	Maple	10"		TR	
200	Maple	10"		TR	
201	Maple	10"		TR	
202	Ash	10"		TR	
203	Elm	10"		TR	
204	Ash	10"		TR	
205	Oak	36"		TR	
206	Ash	8"		TR	
207	Maple	24"		TBR	
208	Oak	28"		TBR	
209	Ash	9"		TBR	
210	Hickory	18"		TBR	
211	Oak	12"		TBR	
212	Oak	36"		TBR	
213	Maple	5",11"		TBR	
214	Maple	9"		TBR	
215	Elm	8"		TBR	
216	Ash	16"		TR	
217	Ash	21"		TR	
218	Ash	16"		TR	
219	Maple	8"		TBR	
220	Ash	9"		TR	
221	Ash (Twin)	12",16"		TR	
222	Elm	8"		TR	
223	Maple	10"		TBR	
224	Elm	9"		TBR	
225	Elm	12"		TR	
226	Birch	8"		TR	
227	Birch	8"		TR	
228	Oak	22"		TR	
229	Birch	10"		TBR	
230	Tulip	36"		TR	
231	Oak	20"		TR	
232	Ash	8"		TBR	
233	Maple	12"		TR	
234	Oak	28"		TR	
235	Ash	8"		TR	
236	Hickory	20"		TBR	
237	Tulip	32"		TBR	
238	Tulip	26"		TBR	
239	Hickory	8"		TR	
240	Ash	8"		TR	
241	Oak	28"		TR	
242	Oak	20"		TR	
243	Ash	8"		TBR	
244	Ash	9"		TBR	
245	Ash	9"		TBR	
246	Oak	10"		TBR	
247	Tulip	46"		TBR	
248	Ash	20"		TR	
249	Oak	8"		TBR	
250	Maple	8"		TBR	
251	Oak	9"		TBR	
252	Tulip	28"		TBR	
253	Walnut	16"		TBR	
254	Tulip	24"		TBR	
255	Tulip	12"		TBR	
256	Cherry	16"		TBR	
257	Maple	8"		TBR	
258	Maple	9"		TBR	
259	Tulip	30"		TBR	
260	Tulip	20"		TBR	
261	Maple (Twin)	7"		TBR	
262	Oak	36"		TBR	
263	Oak	9"		TBR	
264	Oak	38"		TBR	
265	Maple	26"		TBR	
266	Maple	8"		TBR	
267	Birch	8"		TR	
268	Maple	12"		TBR	
269	Birch	12"		TBR	
270	Oak	24"		TBR	
271	Hickory	12"		TBR	
272	Oak	16"		TBR	
273	Oak	9"		TBR	
274	Tulip	36"		TBR	
275	Oak	38"		TBR	
276	Ash	12"		TBR	
277	Ash	8"		TBR	
278	Hickory	8"		TBR	
279	Tulip	12"		TBR	
280	Ash	14"		TBR	
281	Tulip	16"		TBR	
282	Tulip	13"		TBR	
283	Hickory	11"		TBR	
284	Tulip	14"		TBR	
285	Maple	9"		TBR	
286	Walnut	18"		TBR	
287	Oak	10"		TBR	
288	Hickory	9"		TBR	
289	Tulip	16"		TBR	
290	Cherry	7"		TR	
291	Oak	21"		TR	
292	Oak	10"		TR	
293	Oak	20"		TR	
294	Oak	12"		TR	
295	Tulip	30"		TR	
296	Oak	15"		TR	
297	Oak	18"		TR	
298	Oak	22"		TR	
299	Oak	16"		TR	
300	Oak	22"		TR	
301	Oak	26"		TR	
302	Oak	18"		TR	
303	Maple	15"		TR	
304	Oak	21"		TR	
305	Hickory	18"		TR	
306	Oak (Twin)	24"		TR	
307	Oak	8"		TR	
308	Oak	16"		TR	
309	Maple	20"		TR	
310	Hickory	8"		TR	
311	Maple	8"		TR	
312	Maple	24"		TR	
313	Oak	16"		TBR	
314	Maple	22"		TBR	
315	Oak	24"		TBR	
316	Maple	10"		TBR	
317	Oak	32"		TBR	
318	Maple	8"		TBR	
319	Oak	25"		TR	
320	Maple	8"		TBR	
321	Tulip	22"		TBR	
322	Maple	8"		TR	
323	Maple	8"		TR	
324	Maple	26"		TR	
325	Ash	12"		TR	
326	Ash	9"		TR	
327	Oak	10"		TR	
328	Ash	10"		TR	
329	Ash	8"		TR	
330	Ash	11"		TR	
331	Maple	10"		TR	
332	Hickory	9"		TR	
333	Maple	8"		TR	
334	Maple (Twin)	7",8"		TBR	
335	Ash	16"		TR	
336	Oak	8"		TBR	
337	Maple	9"		TR	
338	Maple	9"		TR	
339	Maple	12"		TR	
340	Maple	14"		TBR	
341	Maple	36"		TBR	
342	Maple	10"		TBR	
343	Maple	12"		TBR	
344	Ash	9"		TBR	
345	Hickory	10"		TBR	
346	Maple	24"		TR	
347	Oak	24"		TBR	
348	Hickory	20"		TBR	
349	Sassafrass (Twin)	8"	Dead (1 only)	TBR	
350	Maple	8"		TBR	
351	Oak	8"		TBR	
352	Maple	8"		TBR	
353	Maple	12"		TBR	
354	Oak	10"		TBR	
355	Cherry	8"		TBR	
356	Cedar	8"		TBR	
357	Maple	8"		TRB	
358	Tulip	26"		TBR	
359	Maple	12"		TBR	
360	Maple	8"		TBR	
361	Cedar	12"		TBR	
362	Maple	8"		TBR	
363	Oak	8"		TBR	
364	Cherry	18"		TBR	
365	Maple	10"		TBR	
366	Maple	11"		TBR	
367	Maple	10"		TBR	
368	Maple	8"		TBR	
369	Maple	9"		TBR	
370	Maple	12"		TBR	
371	Maple	10"		TR	
372	Tulip	14"		TR	
373	Maple	14"		TBR	
374	Maple	9"		TBR	
375	Poplar	40"		TBR	
376	Maple	8"		TBR	
377	Ash	22"	Dead	TBR	
378	Maple	10"		TBR	
379	Cedar	9",12"		TBR	
380	Cedar	10"		TBR	
381	Cedar	10"	Dead	TBR	
382	Maple	10"		TBR	
383	Cherry	10"		TBR	
384	Cherry	12"	Dead	TBR	
385	Ash	16"		TBR	
386	Ash	16"		TBR	
387	Tulip	12"		TBR	
388	Cedar (Twin)	8"		TBR	
389	Maple	22"		TBR	
390	Tulip	18"		TBR	
391	Tulip	12"		TBR	
392	Maple	8"		TR	
393	Maple	8"		TR	
394	Maple	8"		TR	
395	Maple	8"		TR	
396	Maple	12"		TR	
397	Maple	10"		TBR	
398	Maple	10"		TR	
399	Maple	18"		TBR	
400	Maple	8"		TBR	
401	Maple	8"		TBR	
402	Maple	8"		TR	
403	Maple	8"		TR	
404	Oak	40"		TR	
405	Maple	9"		TR	
406	Ash	12"		TBR	
407	Maple	9"		TR	
408	Maple	9"		TR	
409	Maple	10"		TBR	
410	Maple	8"		TBR	
411	Tulip	18"		TR	
412	Maple	8"		TR	
413	Maple	10"		TR	
414	Elm	14"		TR	
415	Maple	10"		TR	
416	Maple	10"		TR	
417	Maple	10"		TR	
418	Elm	20"		TR	
419	Maple	8"		TR	
420	Maple	8"		TR	
421	Maple	8"		TR	
422	Maple	12"		TR	
423	Maple	8"		TR	
424	Cedar	9"		TR	
425	Maple	10"		TR	
426	Maple	11"		TR	
427	Maple	8"		TR	
428	Maple	8"		TR	
429	Maple	10"		TR	
430	Hickory	28"		TBR	
431	Tulip	9"		TBR	
432	Oak	12"		TBR	
433	Maple	8"		TR	
434	Maple	12"		TR	
435	Maple	12"		TR	
436	Maple	8"		TR	
437	Maple	10"		TR	
438	Maple	8"		TR	
439	Maple	12"		TR	
440	Maple	8"		TR	
441	Maple	11"		TR	
442	Cherry	11"		TR	
443	Maple	10"		TBR	
444	Maple	8"		TBR	
445	Maple	10"		TR	
446	Maple	11"		TR	
447	Maple	10"		TR	
448	Maple	12"		TR	
449	Maple	12"		TR	
450	Maple	16"		TR	
451	Maple	8"		TR	
452	Maple	12"		TR	
453	Maple	8"		TR	
454	Maple	14"		TR	
455	Maple	12"		TR	
456	Maple	12"		TR	
457	Maple	14"		TR	
458	Maple	8"		TR	
459	Birch	8"		TBR	
460	Birch	8"		TBR	
461	Maple	10"		TR	
462	Hickory	18"		TBR	
463	Maple (Quintuple)	5"–7"		TBR	
464	Maple	32"		TBR	
465	Maple	22"		TBR	
466	Maple	36"		TBR	
467	Maple	30"		TBR	
468	Oak	18"		TBR	
469	Maple	9"		TBR	
470	Maple	12"		TBR	
471	Maple	40"		TBR	
472	Maple	50"		TBR	
473	Maple	11"		TBR	
474	Maple	8"		TBR	
475	Maple	9"		TBR	
476	Maple	8"		TBR	
477	Oak	10"		TR	
478	Maple	8"		TR	
479	Maple	9"		TR	
480	Maple	9"		TBR	
481	Maple	14"		TBR	
482	Maple	9"		TBR	
483	Ash	16"		TBR	
484	Ash	12"		TBR	
485	Ash	10"		TBR	
486	Cherry	8"		TBR	
487	Tulip	14"		TBR	
488	Ash	12"		TBR	
489	Cherry	10"	Dead	TBR	
490	Ash	22"		TBR	
491	Maple (Twin)	6",9"		TBR	
492	Ash	12"		TBR	
493	Ash	8"		TBR	
494	Cherry	12"		TBR	
495	Maple	10"		TBR	
496	Maple	8"		TBR	
497	Maple	10"		TBR	
498	Tulip	12"		TBR	
499	Maple (Twin)	6"		TBR	
500	Hickory	18"		TBR	
501	Oak	38"		TBR	
502	Maple (Twin)	6"		TBR	
503	Birch	6"		TBR	
504	Oak	50"		TBR	
505	Maple	12"		TBR	
506	Maple	9"		TBR	
507	Maple	9"		TBR	
508	Ash	10"		TBR	
509	Hickory	10"		TBR	
510	Maple (Twin)	10",18"		TBR	
511	Maple	28"		TBR	
512	Ash (Twin)	16",18"		TBR	
513	Elm	10"		TBR	
514	Tulip	38"		TBR	
515	Maple	30"		TBR	
516	Maple	26"		TBR	
517	Maple	22"		TBR	
518	Maple	24"		TBR	
519	Maple (Twin)	6",9"		TBR	
520	Tulip (Twin)	16",22"		TBR	
521	Maple	22"		TBR	
522	Ash	10"		TBR	
523	Maple	16"		TBR	
524	Maple	10"		TBR	
525	Oak	20"		TBR	
526	Tulip	18"		TBR	
527	Tulip	34"		TBR	
528	Tulip	10"		TBR	
529	Tulip	14"		TBR	
530	Maple	22"		TBR	
531	Maple	22"		TBR	
532	Maple	18"		TBR	
533	Maple	22"		TBR	
534	Maple	24"		TBR	
535	Maple	18"		TBR	
536	Maple	9"		TBR	
537	Maple	8"		TBR	
538	Ash	9"		TBR	
539	Oak	8"		TBR	
540	Oak	12"		TBR	
541	Oak	12"		TBR	
542	Maple	35"		TBR	
543	Oak	9"		TBR	
544	Oak	42"	Mostly Dead	TBR	
545	Hickory	8"		TBR	
546	Birch	14"		TBR	
547	Tulip	14"		TBR	
548	Oak	35"		TBR	
549	Oak	43"		TBR	
550	Oak	13"		TBR	
551	Walnut	10"		TBR	
552	Tulip	14"		TBR	
553	Walnut	12"		TBR	
554	Tulip	30"		TBR	
555	Walnut	20"		TBR	
556	Birch	10"		TBR	
557	Elm	14"		TBR	
558	Oak	10"		TBR	
559	Tulip	10"		TBR	
560	Birch	8"		TBR	
561	Ash	10"		TBR	
562	Oak	8"		TBR	
563	Elm	14"		TBR	
564	Maple	10"		TBR	
565	Tulip	17"		TBR	
566	Oak	24"		TBR	
567	Oak (Twin)	18"		TBR	
568	Oak	22"		TBR	
569	Beech	42"		TBR	
570	Oak	9"		TBR	
571	Oak	9"		TBR	
572	Cedar	10"		TBR	
573	Maple	22"		TBR	
574	Oak	14"		TBR	
575	Oak	10"		TBR	
576	Oak	8"		TBR	
577	Maple	8"		TBR	
578	Oak	8"		TBR	
579	Unknown	9"	Vine Covered	TBR	
580	Oak	12"		TBR	
581	Oak	17"	Vine Choked	TBR	
582	Elm	9"		TBR	
583	Tulip	15"		TBR	
584	Maple	24"		TBR	
585	Maple (Twin)	16"		TBR	
586	Oak	14"		TBR	
587	Tulip	16"		TBR	
588	Oak	12"		TBR	
589	Oak	10"		TBR	
590	Tulip	9"		TBR	
591	Cedar (Twin)	10"		TBR	
592	Birch (Twin)	8",10"		TBR	
593	Tulip	28"		TBR	
594	Tulip	13"		TBR	
595	Tulip	8"		TBR	
596	Cork	14"		TBR	
597	Maple	15"		TBR	
598	Tulip	12"			DUPLICATE TO 528
599	Tulip	16"		TBR	
600	Tulip	13"		TBR	
601	Oak	22"		TBR	
602	Tulip	8"		TBR	
603	Tulip	10"		TBR	
604	Tulip	10"		TBR	
605	Maple	20"		TBR	
606	Tulip	8"		TBR	
607	Tulip	12"		TBR	
608	Tulip	8"		TBR	
609	Tulip	10"		TBR	
610	Cherry	16"		TBR	
611	Cherry	16"		TBR	
612	Maple	8"		TBR	
613	Tulip	22"		TBR	
614	Hickory	10"		TBR	
615	Oak	11"		TBR	
616	Tulip	30"		TBR	
617	Oak	20"		TBR	
618	Birch	16"		TBR	
619	Maple	8"		TBR	
620	Oak	36"		TR	
621	Cherry	20"		TR	
622	Tulip	18"		TBR	
623	Tulip	20"		TBR	
624	Tulip	12"		TBR	
625	Tulip	34"		TBR	
626	Cherry	16"		TBR	
627	Ash	16"		TBR	
628	Tulip	16"		TR	
629	Tulip	16"		TR	
630	Birch	18"		TR	
631	Tulip	26"		TBR	
632	Tulip	11"		TBR	
633	Maple	8"		TBR	
634	Tulip	8"		TBR	
635	Tulip	48"		TBR	
636	Maple	11"		TBR	
637	Maple	16"		TBR	
638	Ash	10"		TBR	
639	Maple	9"		TBR	
640	Cherry	14"		TBR	
641	Ash	10"		TBR	
642	Maple	16"		TBR	
643	Ash	18"		TBR	
644	Maple	11"		TBR	
645	Maple	8"		TBR	
646	Maple	11"		TBR	
647	Maple	8"		TBR	
648	Maple	10"		TBR	
649	Ash	8"		TBR	
650	Maple	34"		TBR	
651	Cherry	14"		TR	
652	Tulip	18"		TR	
653	Oak	26"		TR	
654	Oak	10"		TBR	
655	Birch	14"		TBR	
656	Maple	11"		TBR	
657	Maple (Twin)	16"		TBR	
658	Maple	9"		TBR	
659	Maple	12"		TBR	
660	Maple	14"		TBR	
661	Maple	8"		TBR	
662	Ash	12"		TBR	
663	Maple	10"		TBR	
664	Ash	18"		TBR	
665	Ash (Twin)	12"		TBR	
666	Elm	20"		TBR	
667	Oak	12"		TBR	
668	Maple	9"		TBR	
669	Maple	8"		TBR	
670	Maple	10"		TBR	
671	Maple	12"		TBR	
672	Tulip	22"		TBR	
673	Tulip	28"		TBR	
674	Maple	10"		TBR	
675	Cherry	15"		TR	
676	Cherry	10"		TR	
677	Ash	22"		TR	
678	Birch	10"		TR	
679	Tulip	8"		TR	
680	Oak	24"		TR	
681	Oak	24"		TR	
682	Oak	24"		TR	
683	Maple	10"		TR	
684	Birch	8"		TR	
685	Pine	8"		TBR	
686	Pine	16"		TBR	
687	Oak	11"		TR	
688	Pine	18"		TBR	
689	Pine	18"		TBR	
690	Pine	12"		TBR	
691	Pine	14"		TBR	
692	Pine	10"		TBR	
693	Pine	10"		TBR	
694	Pine	18"		TBR	
695	Pine	20"		TBR	
696	Pine	8"		TR	
697	Pine	12"		TR	
698	Pine	14"		TBR	
699	Pine	8"		TBR	
700	Pine	12"		TBR	
701	Pine	14"		TBR	
702	Pine	9"		TBR	
703	Pine	11"		TBR	
704	Pine	10"		TBR	
705	Pine	10"		TBR	
706	Tulip	30"		TBR	
707	Pine	12"		TBR	
708	Pine	14"		TBR	
709	Pine	12"		TBR	
710	Pine	16"		TBR	
711	Pine	20"		TBR	
712	Pine	8"		TBR	
713	Pine	8"		TBR	
714	Pine	8"		TBR	
715	Pine	8"		TBR	
716	Pine	14"		TBR	
717	Pine	12"		TBR	
718	Pine	8"		TBR	
719	Pine	8"		TBR	
720	Pine	14"		TBR	
721	Pine	12"		TBR	
722	Pine	12"		TBR	
723	Pine	12"		TBR	
724	Pine	10"		TBR	
725	Pine	8"		TBR	
726	Pine	8"		TBR	
727	Pine	14"		TBR	
728	Pine	9"		TBR	
729	Pine	12"		TBR	
730	Pine	16"		TBR	
731	Pine	16"		TR	
732	Pine	20"		TR	
733	Pine	16"		TBR	
734	Pine	16"		TBR	
735	Pine	10"		TBR	
736	Pine	18"		TBR	
737	Tulip	26"		TBR	
738	Maple	18"		TR	
739	Maple (Triple)	6",8",18"		TR	
740	Oak	18"		TR	
741	Oak	18"		TR	
742	Maple (Twin)	14"		TR	
743	Elm	11"		TR	
744	Maple	16"		TR	
745	Cherry	12"		TR	
746	Maple	12"		TR	
747	Maple	20"		TR	
748	Maple (Twin)	12"		TR	
749	Maple	8"		TR	
750	Maple	8"		TR	
751	Tulip	24"		TR	
752	Maple	8"		TR	
753	Elm	12"		TR	
754	Cherry	14"		TR	
755	Maple	22"		TR	
756	Maple	12"		TR	
757	Oak (Twin)	10",20"		TR	
758	Maple (Triple)	12",12",16"		TR	
759	Maple	11"		TR	
760	Ash	11"		TR	
761	Maple	8"		TR	
762	Cherry	18"		TR	
763	Maple (Triple)	20"		TR	
764	Maple (Twin)	6"		TR	
765	Maple	8"		TBR	
766	Maple	8"		TBR	
767	Birch	10"		TR	
768	Tulip	10"		TBR	
769	Tulip	12"		TBR	
770	Tulip	16"		TBR	
771	Maple (Twin)	10"		TBR	
772	Maple	8"		TBR	
773	Poplar	12"		TBR	
774	Poplar	8"		TBR	
775	Maple	10"		TBR	
776	Walnut	34"		TBR	
777	Maple	20"		TBR	
778	Locust	14"		TBR	
779	Locust	10"		TBR	
780	Maple	8"		TBR	
781	Locust	10"		TBR	
782	Locust	10"		TBR	
783	Locust	16"		TBR	
784	Maple	11"		TBR	
785	Maple	8"		TBR	
786	Maple (Twin)	7"		TBR	
787	Maple	8"		TBR	
788	Locust	10"		TBR	
789	Locust	14"		TBR	
790	Oak	12"		TBR	
791	Oak	8"		TBR	
792	Oak	18"		TBR	
793	Birch	8"		TBR	
794	Locust	14"		TBR	
795	Locust	12"		TBR	
796	Locust	16"		TBR	
797	Locust	18"		TBR	
798	Birch	10"		TBR	
799	Oak	12"		TBR	
800	Maple	18"		TR	
801	Oak	14"		TR	
802	Maple	24"		TR	
803	Maple (Twin)	14"		TR	
804	Ash	8"		TR	
805	Ash	8"		TR	
806	Birch	28"		TR	
807	Maple	8"		TBR	
808	Maple	8"		TBR	
809	Maple	12"		TBR	
810	Maple	10"		TBR	
811	Maple	8"		TBR	
812	Tulip	22"		TBR	
813	Tulip	22"		TBR	
814	Oak	16"		TBR	
815	Walnut (Twin)	8"		TBR	
816	Ash	14"		TBR	
817	Maple	8"		TR	
818	Maple	16"		TR	
819	Cedar	6"		TR	
820	Tulip	12"		TBR	
821	Tulip	11"		TBR	
822	Tulip	14"		TBR	
823	Sumac	10"		TBR	
824	Oak	14"		TBR	
825	Tulip (Twin)	10"		TBR	
826	Tulip	8"		TBR	
827	Cherry	8"		TBR	
828	Tulip	12"		TBR	
829	Tulip	10"		TBR	
830	Tulip	16"		TBR	
831	Maple	8"		TBR	
832	Oak	16"		TBR	
833	Tulip	12"		TBR	
834	Sycamor	15"		TBR	
835	Oak	8"		TBR	
836	Oak	10"		TBR	
837	Ash	12"		TBR	
838	Tulip	14"		TBR	
839	Sycamor	14"		TBR	
840	Sumac	10"		TBR	
841	Tulip	8"		TBR	
842	Tulip	9"		TBR	
843	Tulip	8"		TBR	
844	Oak (Twin)	8",12"		TBR	
845	Tulip	8"		TBR	
846	Oak	18"		TBR	
847	Oak	18"		TBR	
848	Maple	8"		TBR	
849	Sumac	14"		TBR	
850	Tulip	10"		TBR	
851	Tulip	8"		TBR	
852	Oak	12"		TBR	
853	Tulip	10"		TBR	
854	Maple	12"		TBR	
855	Maple	16"		TR	
856	Maple	16"		TR	
857	Tulip (Twin)	16", 22"		TR	
858	Birch	15"		TR	
859	Maple	14"		TR	
860	Maple	14"		TR	
861	Maple	10"		TR	
862	Maple	15"		TR	
863	Maple	10"		TR	
864	Crabapple	6"		TR	
865	Cherry	12"		TR	
866	Cherry	10"		TR	
867	Cherry	10"		TBR	

REV	DESCRIPTION	BY	DATE
6	PER PB COMMENTS	ZK	11/21/17
5	PER PB COMMENTS	AP	10/20/17
4	PER PB COMMENTS	AP	9/18/17
3	SITE PLAN SUBMISSION	AP	8/16/17
2	AS PER COMMENTS	AP	5/17/17
1	AS PER PB COMMENTS	AP	1/24/17

DISCLAIMER:
UNAUTHORIZED ALTERATION OR ADDITIONS TO THESE PLANS IS A VIOLATION OF THE N.Y.S. EDUCATION LAW, ARTICLE 145, SECTION 7209, SUBSECTION 2.

BROOKER ENGINEERING, PLLC
PROFESSIONAL ENGINEERS AND LAND SURVEYORS
LAND DEVELOPMENT • MUNICIPAL • STRUCTURAL • HYDROLOGICAL • SURVEYING
www.BrookerEngineering.com

74 Lafayette Avenue, Suite 501
Suffern, NY 10901
(845) 357-4411

46 N. Central Avenue
Ramsey, NJ 07446
(201) 684-1221

PROJECT:
MONTEBELLO CROSSING
VILLAGE OF MONTEBELLO
ROCKLAND COUNTY
NEW YORK

TITLE:
TREE TABLE

60229
Brian Brooker
BRIAN A. BROOKER,
PROFESSIONAL ENGINEER
N.Y.S. Lic. No. 60229

PROJECT NO: 13082
DRAWN: Z.K.
CHECKED: B.B.
SCALE: AS SHOWN
GRAPHIC SCALE:
DATE: 5/27/2016
DRAWING NO: 16