L'DOR ASSISTED LIVING

West Clarkstown Road, New City, New York

OWNER: FRIENDSHIP VENTURES, LLC
32 PINETREE DRIVE, POUGHKEEPSIE, NEW YORK 12603

ARCHITECT: HARRIS A. SANDERS, ARCHITECTS, P.C.
252 WASHINGTON AVENUE, ALBANY, NEW YORK 12210

SITE ENGINEER: ATZL, NASHER & ZIGLER, P.C.
234 NORTH MAIN STREET, NEW CITY, NEW YORK 10956

MEP ENGINEER: M/E ENGINEERING
433 STATE STREET, SUITE 410, SCHENECTADY, NEW YORK 12305

DRAWINGS

- COVER SHEET

ST1 STRUCTURAL NOTES
ST2 FOUNDATION PLAN & DETAILS
ST3 FIRST FLOOR FRAMING PLAN
ST4 SECOND FLOOR FRAMING PLAN
ST5 ROOF FRAMING PLAN

A1 BASEMENT FLOOR PLAN
A2 FIRST FLOOR PLAN
A3 SECOND FLOOR PLAN
A4 ROOF PLAN
A5 ELEVATIONS
A6 ELEVATIONS
A7 WALL SECTIONS
A8 FRONT PORCH SECTION & BALCONY STAIR FRAMING
A9 STAIR & ELEVATOR DETAILS
A10 TYPICAL UNIT PLANS & TYPICAL BATHROOM DETAILS
A11 DOOR SCHEDULE & DOOR TYPES
A12 ROOM FINISH SCHEDULE
A13 BASEMENT REFLECTED CEILING PLAN
A14 FIRST FLOOR REFLECTED CEILING PLAN
A15 SECOND FLOOR REFLECTED CEILING PLAN

P001 NOTES, SCHEDULE & LEGEND
P100 BELOW FLOOR SANITARY AND VENT PLUMBING PLAN
P101 BASEMENT SANITARY AND VENT PLUMBING PLAN
P102 FIRST FLOOR SANITARY AND VENT PLUMBING PLAN
P103 SECOND FLOOR SANITARY AND VENT PLUMBING PLAN
P104 ROOF PLUMBING PLAN
P201 BASEMENT COMESTIC WATER AND GAS PLUMBING PLAN
P202 FIRST FLOOOR DOMESTIC WATER AND GAS PLUMBING PLAN
P203 SECOND FLOOR DOMESTIC WATER AND GAS PLUMBING PLAN
P301 PLUMBING DETAILS
P302 PLUMING DETAILS

BUILDING DEPARTMENT NOTES

BUILDING CODE REVIEW

1. BUILDING CODE
ALL WORK WILL BE PERFORMED IN ACCORDANCE WITH THE REQUIREMENTS OF THE NYS DEPARTMENT OF HEALTH REGULATIONS TITLE 10 SECTION 1001.13 2020 BUILDING CODE OF NEW YORK STATE, AND THE TOWN OF CLARKSTOWN.

2. STRUCTURAL DESIGN
THE STRUCTURAL DESIGN SHALL CONFORM TO THE APPLICABLE REQUIREMENTS OF THE 2020 BUILDING CODE OF NEW YORK STATE.

3. OCCUPANCY CLASSIFICATION
INSTITUTIONAL - GROUP I-1 CONDITION 2

4. BUILDING HEIGHT - TWO (2) STORIES WITH BASEMENT

5. CONSTRUCTION CLASSIFICATION - TYPE V-A

6. ALLOWABLE AREA PER FLOOR AND BUILDING HEIGHT
INSTITUTIONAL - GROUP I-1 (ASSISTED LIVING)
A. ALLOWABLE HEIGHT AND FIRE AREA (TABLES 504.4 & 506.3) THREE (3) STORIES 21,000 SQ. FT. (NFPA 13 SPRINKLER SYSTEM)

B. ACTUAL BUILDING AREA -
BASEMENT 4,400 SF
FIRST FLOOR 14,860 SF
SECOND FLOOR 14,860 SF

7. FIRE RESISTANCE REQUIREMENTS
A. STRUCTURAL FRAME - 1 HR (TABLE 601)
B. BEARING WALLS - 1 HR (TABLE 601)
C. FLOOR CONSTRUCTION - 1HR
D. ROOF CONSTRUCTION - 1HR
E. EXIT ENCLOSURES - 1 HR
F. CORRIDORS - 1HR
G. TENANT SEPARATION - 1HR

8. STAIR ENCLOSURES (2020 BCNYS SECTION 1020)
STAIRS 1, 2, 4 & 5 WILL BE ENCLOSED WITH PARTITIONS AND CEILING ASSEMBLY HAVING A MINIMUM FIRE RESISTANCE RATING OF ONE (1) HOUR. PER 2020 BCNYS SECTION 1023. STAIR 3 CONFORMS TO THE REQUIREMENTS OF SECTION 1019.

9. SMOKE BARRIERS
PER DOH REQUIREMENTS SMOKE BARRIERS ARE PROVIDED AS INDICATED ON THE FLOOR PLANS & FRAMING PLANS. SMOKE BARRIERS SHALL CONFORM TO THE REQUIREMENTS OF 2020 BCNYS SECTION 709 INCLUDING 709.4 CONTINUITY EXPRESSION

10. AUTOMATIC SPRINKLER SYSTEM
THE BUILDING WILL BE FULLY SPRINKLED IN ACCORDANCE WITH THE REQUIREMENTS OF NFPA 13 AND SECTION 903.3.1.1 OF THE 2020 BCNYS.

11. FIRE ALARM AND DETECTION SYSTEM
FIRE ALARM AND DETECTION SYSTEM WILL BE INSTALLED IN ACCORDANCE WITH THE REQUIREMENTS OF NFPA 72 AND THE 2020 BCNYS. SPRINKLER SYSTEM WILL BE INSTALLED IN ALL COMBUSTIBLE CONCEALED SPACES INCLUDING BETWEEN FLOORS, THE ATTIC AND PORCH SPACES.

12. FIRE EXTINGUISHERS
FIRE EXTINGUISHERS SHALL BE PROVIDED IN ACCORDANCE WITH APPLICABLE REQUIREMENTS OF SECTION 906 OF THE 2020 BCNYS.

13. FIRE BLOCKING AND DRAFT STOPPING
FIRE BLOCKING & DRAFT STOPPING SHALL BE INSTALLED IN COMBUSTIBLE CONCEALED LOCATIONS IN ACCORDANCE WITH SECTION 718 OF THE 2020 BCNYS.

14. DUCT PENETRATIONS OF FIRE RATED ASSEMBLIES
A. FIRE PARTITIONS - FIRE DAMPERS ARE NOT REQUIRED AS NOTED IN 2020 BCNYS SECTION 717.5.4 EXCEPTION 1. ANY VOIDS BETWEEN THE DUCT AND THE ADJACENT PARTITIONS WILL BE FIRE STOPPED WITH A SYSTEM EQUAL TO HILTI FIRESTOP SYSTEMS NO. W-L-7059.

B. PENETRATIONS THROUGH A RATED FLOOR/CEILING ASSEMBLY A FIRE DAMPER WILL BE INSTALLED AT THE FLOOR LINE OF DUCT PENETRATIONS OF FLOOR/CEILING ASSEMBLIES. THE DUCT WILL BE FIRESTOPPED AT THE CEILING LINE. (2020 BCNYS SECTION 717.6.1)

C. PENETRATIONS THROUGH THE CEILING MEMBRANE OF A RATED FLOOR/CEILING ASSEMBLY. AN APPROVED CEILING AT THE CEILING LINE OF DUCTS PENETRATING THE CEILING MEMBRANE OF A RATED FLOOR/CEILING ASSEMBLY. RADIATION DAMPERS WILL ALSO BE INSTALLED WHERE DIFFUSERS PENETRATE THE CEILING MEMBRANE OF A RATED FLOOR CEILING ASSEMBLY. (2020 BCNYS SECTION 717.6.2)

15. PIPE PENETRATIONS OF FIRE RATED ASSEMBLIES
ANY VOIDS AT PIPE PENETRATIONS OF FIRE RATED ASSEMBLIES SHALL BE FIRESTOPPED IN ACCORDANCE WITH A SYSTEM EQUAL TO AN APPROVED HILTI FIRESTOP SYSTEM FOR THAT SPECIFIC APPLICATION.

16. EXIT SIGNS AND EMERGENCY LIGHTING
EXIT SIGNS AND EMERGENCY LIGHTING WILL BE INSTALLED IN ACCORDANCE WITH THE REQUIREMENTS OF THE 2020 BCNYS 1008.3 AND 1013.

17. ATTIC ACCESS
ATTIC ACCESS SHALL BE PROVIDED THROUGH FIRE RATED ACCESS PANELS.

18. HANDICAP ACCESSIBILITY
THE BUILDING HAS BEEN DESIGNED IN ACCORDANCE WITH THE REQUIREMENTS OF THE 2020 BCNYS AND ICC A117.1 - 2009. ALL SLEEPING ROOMS HAVE BEEN DESIGNED TO BE TYPE B UNITS (90%) OR ACCESSIBLE UNITS (10%).

19. PLUMBING, HVAC AND ELECTRICAL
ALL PLUMBING, HVAC AND ELECTRICAL WORK SHALL BE PERFORMED IN ACCORDANCE WITH THE REQUIREMENTS OF THE 2020 BCNYS AND THE TOWN OF CLARKSTOWN.

20. ENERGY ANALYSIS
ALL AREAS OF THE BUILDING HAVE BEEN DESIGNED IN COMPLIANCE WITH THE 2020 ENERGY CONSERVATION CONSTRUCTION CODE OF NYS.

FIRE PROTECTION SYSTEM NOTES

1. THE WORK REQUIRED SHALL INCLUDE ALL REQUIRED PIPING, FITTINGS, HANGERS, SPRINKLER HEADS, VALVES, DRAINS, ALARMS, ETC. TO COMPLY WITH NFPA 13, ALL LOCAL AND STATE CODES, AND THE CONSTRUCTION DOCUMENTS.

2. THE AUTOMATIC SPRINKLER SYSTEM SHALL ALSO BE INSTALLED IN ALL COMBUSTIBLE CONCEALED SPACES INCLUDING:

A. FLOOR/CEILING SPACE WHERE OPEN WEB WOOD TRUSSES ARE USED.

B. ATTIC AND PORCH ROOF TRUSS SPACES (2020 BCNYS)

3. THE CONTRACTOR SHALL LAYOUT AND INSTALL A COMPLETE SPRINKLER SYSTEM AS REQUIRED TO MEET CODES AND SHALL OBTAIN APPROVALS REQUIRED FROM THE BUILDING DEPARTMENT AND THE INSURING AGENT.

4. SUBMIT SHOP DRAWINGS FOR THE COMPLETE SYSTEM ALONG WITH REQUIRED CALCULATIONS FOR APPROVAL TO THE ARCHITECT. SHOP DRAWINGS SHALL INCLUDE SPRINKLER FABRICATION DRAWINGS, PIPING AND ALL APPURTENANCES, INDICATORS, ALARMS GAUGES & SPRINKLER HEADS.

5. THE LAYOUT SUBMITTED BY THE CONTRACTOR SHALL INCLUDE ANY ADDITIONAL HEADS AND PIPING REQUIRED TO COMPLETE THE INSTALLATION OF THE SYSTEM TO MEET CODES.

6. PROVIDE FOUR (4) ADDITIONAL HEADS OF EACH TYPE USED ON THE PROJECT TO OWNER AFTER WORK IS COMPLETED.

7. PIPING SHALL BE STEEL CONFORMING WITH FEDERAL SPECIFICATION WW-P-501 OR NFPA APPROVED CPVC FIRE SPRINKLER PIPING WITH APPROVED FITTINGS. OS&Y VALVES SHALL BE DESIGNED FOR 175 LB WORKING PRESSURE, FEDERAL SPECIFICATION WW-V-51. ALL EQUIPMENT SHALL BE U.L. APPROVED AND SHALL BE EQUAL TO VIKING CO.

8. ALL SPRINKLER HEADS IN EXPOSED AREAS SHALL BE THE COLOR WHITE.

REGISTERED ARCHITECT
DANIEL PAUL SANDERS
024004
STATE OF NEW YORK

PERMIT SET
05-12-21

STRUCTURAL NOTES

A. GENERAL NOTES

1. THIS PROJECT HAS BEEN DESIGNED USING THE 2020 EDITION OF THE BUILDING CODE OF NEW YORK STATE
2. STRUCTURAL INSPECTIONS ARE A REQUIREMENT FOR THIS PROJECT. AN INDEPENDENT INSPECTION AGENCY SHALL BE SELECTED TO PERFORM THIS SERVICE. ALL INSPECTIONS OF THE APPLICABLE BUILDING CODE ARE REQUIRED AT A MINIMUM. SEE THE NOTES ON THIS DRAWING FOR ANY ADDITIONAL INSPECTIONS REQUIRED.
3. ALL CONTRACTORS AND SUBCONTRACTORS ARE RESPONSIBLE FOR ADHERING TO THE REQUIREMENTS AS INDICATED IN THE NOTES FOR THIS JOB. FAILURE OF THE CONTRACTOR TO READ THE STRUCTURAL NOTES DOES NOT PERMIT THE CONTRACTOR TO DEVIATE FROM THEIR REQUIREMENTS.
4. NO FIELD MODIFICATIONS TO ANY STRUCTURAL COMPONENTS SHALL BE MADE WITHOUT PRIOR APPROVAL BY THE ARCHITECT.
5. ALL CONSTRUCTION AND DEMOLITION SHALL COMPLY WITH ALL APPLICABLE NATIONAL, STATE, AND LOCAL CODES INCLUDING ALL OSHA REGULATION.
6. CONTRACTOR SHALL TAKE ALL NECESSARY PRECAUTIONS TO PROTECT ALL PEOPLE WHO MAY BE ON OR NEAR THE WORK AREA, BY MAINTAINING A SAFE WORK AREA, SAFE WORKING CONDITIONS, AND LIMITING ACCESS TO THE WORK AREA.
7. CONTRACTOR IS FULLY RESPONSIBLE FOR HIS WORKERS' SAFETY, SAFETY EQUIPMENT, FIRST AID, AND EMERGENCY HANDLING PROCEDURES.
8. CONTRACTOR SHALL PERSONALLY SUPERVISE THE WORK AND SHALL BE PRESENT AT THE WORK SITE AT ALL TIMES DURING CONSTRUCTION WORK. CONTRACTOR SHALL PROVIDE ADEQUATE PERSONNEL FOR THE PROPER COORDINATION AND EXPEDITING OF THE WORK.
9. THESE DRAWINGS SHALL NOT BE SCALED FOR PURPOSES OF CONSTRUCTION.
10. IN CASE OF CONFLICT BETWEEN STRUCTURAL DRAWINGS AND OTHER DRAWINGS OF THIS PROJECT, CONTRACTOR SHALL IMMEDIATELY CONTACT ARCHITECT FOR CLARIFICATION PRIOR TO START OF WORK.
11. THE CONTRACTOR IS RESPONSIBLE FOR SURVEYING AND VERIFICATION OF EXISTING CONDITIONS INCLUDING BUT NOT LIMITED TO THE LOCATION, ELEVATIONS AND DIMENSIONS OF THE SITE.
12. THE CONTRACTOR IS RESPONSIBLE FOR THE MEANS AND METHODS OF CONSTRUCTION INCLUDING THE DESIGN OF SHORING, SCAFFOLDING AND FORMWORK.
13. SECTIONS SHOWN ON PLANS APPLY TO SIMILAR CONDITIONS THROUGHOUT THE BUILDING.
14. THE CONTRACTOR IS RESPONSIBLE FOR COORDINATING WITH ALL DRAWINGS FOR THE PROJECT TO LOCATE ALL REQUIRED OPENINGS IN WALLS, FLOORS, ROOF, ETC. ALL OPENINGS MAY NOT BE INDICATED ON STRUCTURAL DRAWINGS.

B. BUILDING STRUCTURE AND LATERAL BRACING DURING CONSTRUCTION

1. THE GRAVITY LOAD RESISTING ELEMENTS OF THE BUILDING STRUCTURE CONSIST OF WOOD STUD BEARING WALLS. LATERAL WIND AND SEISMIC FORCES ARE REGISTERED BY STRUCTURAL SHEATHING AND SHEAR WALLS.
2. WOOD STUDS IN BEARING WALLS ARE TO BE BRACED DURING CONSTRUCTION WITH BLOCKING AT ¼ POINTS ALONG LENGTH OF STUDS. BLOCKING MUST BE INSTALLED TO THE WALL STUDS SUPPORTING THE FLOOR BEING CONSTRUCTED BEFORE PROCEEDING TO THE NEXT HEIGHT FLOOR LEVEL.
3. TEMPORARY LATERAL BRACING OF THE BUILDING STRUCTURE TO RESIST WIND AND SEISMIC FORCES DURING CONSTRUCTION SHALL BE PROVIDED BY THE CONTRACTOR. THIS BRACING MUST REMAIN IN PLACE UNTIL THE PLYWOOD SHEAR WALLS ARE FULLY SHEATHED, NAILED, AND ALL TIES BETWEEN FLOORS HAVE BEEN COMPLETED. TEMPORARY LATERAL BRACING IS TO BE INSTALLED AS THE BUILDING IS BEING CONSTRUCTED. AS EACH LEVEL OF FLOOR FRAMING IS COMPLETED, THE LATERAL BRACING BELOW THAT FLOOR MUST BE INSTALLED BEFORE CONSTRUCTING THE NEXT FLOOR LEVEL.
4. PROPER WEIGHT DISTRIBUTION OF CONSTRUCTION MATERIALS DURING CONSTRUCTION IS A MUST AND IS THE RESPONSIBILITY OF THE CONTRACTOR. DO NOT STACK CONSTRUCTION MATERIALS ON UNBRACED TRUSSES. AVOID STACKING HEAVY CONSTRUCTION MATERIALS AT MID-SPAN OF TRUSSES. HEAVY CONSTRUCTION MATERIALS SHOULD BE STORED AT GROUND LEVEL AND ONLY MOVED TO ELEVATED FLOOR AND ROOF LOCATIONS WHEN REQUIRED FOR INSTALLATION.
5. A CONTINUOUS LOAD PATH FROM THE ELEVATED FLOOR AND ROOF STRUCTURE IS TO BE PROVIDED IN ALL BEARING WALLS. ALL BEARING WALL STUDS SHALL ALIGN WITH FLOOR AND ROOF TRUSS POINTS OF BEARING. ADDITIONAL STUD FRAMING SHALL BE ADDED WHERE FLOOR AND ROOF TRUSSES DO NOT ALIGN WITH A WALL STUD. PROVIDE SOLID BLOCKING AS REQUIRED BETWEEN FLOORS TO PROVIDE A CONTINUOUS LOAD PATH THROUGH THE FLOOR TO THE FOUNDATION.

C. FOUNDATIONS

1. BOTTOM OF ALL FOOTINGS HAVE BEEN DESIGNED TO BEAR ON SOIL CAPABLE OF SAFELY SUPPORTING 3,000 PSF.
2. EXISTING FOUNDATIONS, SLABS, PAVEMENTS, UNDERGROUND UTILITIES AND OTHER BELOW GRADE STRUCTURES SHALL BE REMOVED FROM THE PROPOSED PROJECT SITE BUILDING FOOTPRINT. REMOVE SURFACE VEGETATION, TOPSOIL, ROOT SYSTEMS, ORGANIC MATERIAL, EXISTING FILL AND SOFT UNSUITABLE MATERIAL FROM THE BUILDING AREA.
3. THE CONTRACTOR MUST PROVIDE SURFACE DRAINAGE AND PUMPS TO PROTECT ALL EXCAVATION FROM FLOODING OR GROUND WATER INFILTRATION. FLOODING OF ANY EXCAVATION AFTER APPROVAL OF THE SUBTRADE WILL BE CAUSE FOR COMPLETE RE-PREPARATION OF THE SUBGRADE.
4. BOTTOM OF ALL FOOTINGS MUST BE INSPECTED AND APPROVED BY A REGISTERED SOILS ENGINEER BEFORE PLACING ANY CONCRETE. APPROVAL IN WRITING MUST INDICATE THE SOIL IS ADEQUATE TO SAFELY SUSTAIN A SOIL BEARING PRESSURE OF 3,000 PSF BELOW ALL FOOTINGS.
5. STANDARD PROCEDURES FOR FROST PROTECTION OF FOUNDATIONS AND EXCAVATIONS SHALL BE EMPLOYED FOR WINTER CONSTRUCTION. BACKFILLING OF EXCAVATIONS SHALL BE DONE AS SOON AS POSSIBLE TO PROTECT FOUNDATIONS FROM FROST.
6. HORIZONTAL REINFORCING BARS IN FOUNDATIONS AND STEM WALLS SHALL BE CONTINUOUS. PROVIDE CORNER BARS AT ALL CORNERS AND INTERSECTIONS.

D. CONCRETE

1. ALL CONCRETE SHALL BE NORMAL WEIGHT, READY-MIX. ALL CONCRETE FOR FOUNDATIONS & SLAB ON GRADE SHALL HAVE A MINIMUM COMPRESSIVE STRENGTH OF 3,000 PSI AT 28 DAYS, A MIMIMUM OF 488 LBS. OF CEMENT PER CUBIC YARD, AND HAVE A MAXIMUM WATER-CEMENT RATIO OF 0.52 BY WEIGHT. ALL EXTERIOR CONCRETE (CONCRETE EXPOSED TO WEATHER) SHALL HAVE A MINIMUM COMPRESSIVE STRENGTH OF 4,000 PSI AT 28 DAYS AND SHALL HAVE A MINIMUM OF 535 LBS. OF CEMENT PER CUBIC YARD. ALL EXTERIOR CONCRETE SHALL HAVE 5 PERCENT (MINIMUM) AIR ENTRAINMENT AND HAVE A MAXIMUM WATER-CEMENT RATION OF 0.45 BY WEIGHT. SUBMIT ALL CONCRETE MIX DESIGNS TO THE ARCHITECT FOR REVIEW AND APPROVAL PRIOR TO CONSTRUCTION.
2. ALL CONCRETE SHALL HAVE A WATER REDUCING ADMIXTURE AS REQUIRED TO INCREASE WORKABILITY. WORKABILITY SHALL NOT BE ACHIEVED THROUGH THE ADDITION OF WATER TO THE MIX. CONCRETE SLUMP PRIOR TO ADMIXTURE ADDITION SHALL BE A MAXIMUM OF 3 INCHES.
3. DO NOT USE ADMIXTURES THAT CONTAIN CHLORIDES. FLY ASH OR SLAG SHALL NOT BE USED IN ANY CONCRETE.
4. ALL CONCRETE WORK SHALL COMPLY WITH THE REQUIREMENTS OF THE LATEST EDITIONS OF THE FOLLOWING ACI PUBLICATIONS ACI 301 (SPECIFICATIONS FOR STRUCTURAL CONCRETE FOR BUILDINGS), ACI 302 (RECOMMENDED PRACTICE FOR CONCRETE FLOOR AND SLAB CONSTRUCTION), ACI 304 (ACI MANUAL OF CONCRETE INSPECTION), ACI 311 (RECOMMENDED PRACTICE FOR MEASURING, MIXING, TRANSPORTING AND PLACING CONCRETE), ACI 315 (DETAILS AND DETAILING OF CONCRETE REINFORCEMENT), ACI 318 (BUILDING CODE REQUIREMENTS FOR REINFORCED CONCRETE), AND ACI 347 (RECOMMENDED PRACTICE FOR CONCRETE FORMWORK).
5. PRIOR TO FABRICATION OR SHIPMENT OF MATERIAL, THE CONTRACTOR SHALL SUBMIT AND RECEIVE APPROVAL OF SHOP DRAWINGS. SHOP DRAWINGS SHALL INDICATE BENDING DIAGRAMS, SPLICING, LAPPING, SHAPES, DIMENSIONS AND DETAILS OF ALL BAR REINFORCING. THE APPROVAL OF SHOP DRAWINGS WILL BE FOR ARRANGEMENT ONLY AND SHALL NOT RELIEVE THE CONTRACTOR OF THE RESPONSIBILITY FOR ERRORS, OMISSIONS OR THE ACCURACY OF HIS OWN DIMENSIONS. DRAWINGS AND DETAILS SHALL CONFORM WITH ACI 315.
6. ALL REINFORCING STEEL SHALL BE MANUFACTURED FROM HIGH STRENGTH BILLET STEEL CONFORMING TO ASTM DESIGNATION A-615 GRADE 60. WWF SHALL COMPLY WITH ASTM A-185.
7. LAP ALL BARS MINIMUM 40 DIAMETERS. LAP ALL WWF A MINIMUM OF 6 INCHES.
8. CONTRACTOR SHALL PROVIDE ALL BOLSTERS, CHAIRS, BAR POSITIONERS, ETC. AS REQUIRED TO SET REBAR AND SLAB WWF TO REQUIRED DIMENSIONS INDICATED ON DRAWINGS.
9. CONTROL JOINTS FOR SLABS-ON-GRADE SHALL BE SAW CUT IN ACCORDANCE WITH THE PATTERN APPROVED BY THE ARCHITECT.
10. CONSTRUCTION JOINTS IN SLABS SHALL BE KEY JOINTED WITH REINFORCING CONTINUOUS ACROSS JOINT. COORDINATE WITH THE ARCHITECT FOR CONSTRUCTION JOINT LOCATIONS PRIOR TO CONSTRUCTION.
11. ALL CONCRETE PLACED AT TEMPERATURES BELOW 50 DEGREES F. SHALL CONFORM TO THE REQUIREMENTS OF ACI 306 'COLD WEATHER CONCRETING'. ALL CONCRETE PLACED IN HOT WEATHER SHALL CONFORM TO THE REQUIREMENTS OF ACI 305 'HOT WEATHER CONCRETING'.
12. THE CONTRACTOR SHALL COORDINATE THE LOCATION OF ALL SLEEVES, INSERTS, ANCHOR BOLTS, AND OTHER EMBEDDED ITEMS AS REQUIRED BY OTHER TRADES.
13. ALL CONCRETE SHALL BE PROPERLY CONSOLIDATED THROUGH THE USE OF VIBRATORS. VIBRATORS SHALL NOT BE USED TO TRANSPORT CONCRETE ALONG FORMWORK.
14. UNLESS OTHERWISE SPECIFIED, A TESTING LABORATORY SHALL BE EMPLOYED FOR EVALUATION AND QUALITY CONTROL OF CONCRETE PLACED. FREQUENCY OF CONCRETE TESTING SHALL MEET THE REQUIREMENTS OF ACI 318 AT A MINIMUM UNLESS REQUIRED OTHERWISE BY THE APPLICABLE BUILDING CODE.

E. STEEL

1. ALL WIDE FLANGE BEAMS SHALL CONFORM TO ASTM A992 (FY = 50 KSI). ALL ANGLES AND PLATE MATERIAL SHALL CONFORM TO ASTM A36.
2. ALL STEEL SHALL HAVE A SHOP COAT OF RUST INHIBITIVE PAINT. ALL PRIMER THAT IS DAMAGED IN THE FIELD AND ALL FIELD WELDS SHALL BE TOUCHED UP WITH FIELD APPLIED PRIMER.
3. PROVIDE ALL STEEL REQUIRED TO SUPPORT ELEVATOR EQUIPMENT THIS INCLUDES SHAFT RAIL BEAMS, SILL SUPPORT ANGLES, AND HOIST BEAMS.

F. STRUCTURAL CMU MASONRY

1. MASONRY UNITS SHALL BE TYPE 1 ASTM C-90 (NORMAL WEIGHT) MOISTURE CONTROLLED WITH MINIMUM COMPRESSIVE STRENGTH OF 1,900 PSI AT 28 DAYS ON THE NET AREA OF INDIVIDUAL UNITS. ALL CMU SHALL BE ERECTED IN A RUNNING BOND PATTERN AND SHALL BE LAID IN A FULL BED OF MORTAR. REFER TO ARCHITECTURAL DRAWINGS FOR ADDITIONAL BLOCK REQUIREMENTS FOR ALL CMU LOCATED IN UL FIRE RATED ASSEMBLIES.
2. ALL MORTAR SHALL BE PORTLAND CEMENT/LIME CONFORMING TO ASTM SPEC. C270 TYPE S WITH A MINIMUM COMPRESSIVE STRENGTH OF 1,900 PSI. DO NOT USE ADMIXTURES THAT CONTAIN CHLORIDES.
3. GROUT SHALL BE A HIGH SLUMP MIX IN ACCORDANCE WITH ASTM SPECIFICATION C476 HAVING A MINIMUM COMPRESSIVE STRENGTH OF 2,000 PSI AT 28 DAYS. GROUT MUST HAVE A SLUMP OF 8 TO 11 INCHES. DO NOT USE ADMIXTURES THAT CONTAIN CHLORIDES. DO NOT SUBSTITUTE MORTAR FOR GROUT. CONSOLIDATION OF GROUT IN BLOCK CORES SHOULD BE ACHIEVED WITH A LOW VELOCITY MECHANICAL VIBRATOR WHICH HAS A ¾ INCH HEAD. THE VIBRATOR IS NORMALLY ACTIVATED FOR ONE OR TWO SECONDS IN EACH GROUTED CORE OF HOLLOW UNIT MASONRY.
4. LAID UP MASONRY STRENGTH F'M FOR THE COMPOSITE OF CMU, MORTAR AND GROUT FOR ALL STANDARD MASONRY WALLS SHALL BE 1,500 PSI.
5. ALL CONCRETE MASONRY SHALL BE CONSTRUCTED IN ACCORDANCE WITH THH 'BUILDING CODE REQUIREMENTS FOR MASONRY STRUCTURES ACI 530-05/ASCE 5-05/TMS 402-05' AND 'SPECIFICATIONS FOR MASONRY STRUCTURES ACI 530.1-05/ASCE 6-05/TMS 602-05'.
6. PERFORM INSPECTIONS OF MASONRY CONSTRUCTION IN ACCORDANCE WITH THE REQUIREMENTS OF THE APPLICABLE BUILDING CODE.
7. ALL REINFORCING BARS SHALL BE DEFORMED BARS CONFORMING TO ASTM A615 GRADE 60.
8. PROVIDE HOT-DIPPED GALVANIZED TRUSS TYPE HORIZONTAL JOINT REINFORCEMENT (MIN. 9 GAGE COLD DRAWN GALVANIZED STEEL WIRE) IN ACCORDANCE WITH ASTM A-82 AT 16" ON CENTER VERTICAL IN ALL MASONRY WALLS.
9. ALL CMU CORES WHICH CONTAIN VERTICAL REINFORCING BARS SHALL BE GROUTED SOLID. FILLING CORES WITH MORTAR AS WORK PROGRESSES IS NOT ACCEPTABLE.
10. MINIMUM LENGTH OF LAP SPLICES FOR VERTICAL REINFORCING SHALL NOT BE LESS THAN THE FOLLOWING:
#3 - 18 INCHES
#4 - 24 INCHES
#5 - 30 INCHES
11. VERTICAL REINFORCING BARS SHALL BE SECURED AGAINST DISPLACEMENT PRIOR TO GROUTING BY GALVANIZED BAR POSITIONERS SPACED AT INTERVALS NOT TO EXCEED 112 BAR DIAMETERS. PROVIDE A MINIMUM OF TWO POSITIONERS PER INDIVIDUAL REINFORCING BAR.
12. MASON TO DESIGN, FURNISH AND INSTALL ALL REQUIRED SHORING FOR ERECTION OF THE CMU MASONRY WALLS AND PIERS.
13. MASONRY CONTRACTOR SHALL PROVIDE LINTELS FOR ALL CMU OPENINGS. FOR LINTELS NOT INDICATED (IN NON-LOAD BEARING WALLS) THE CONTRACTOR SHALL REFER TO THE NON-BEARING WALLS LINTEL SCHEDULE.
14. PROVIDE CONTROL JOINTS IN MASONRY WALLS AT A MAXIMUM SPACING OF 35 FEET ON CENTER UNLESS OTHERWISE NOTED ON THE CONTRACT DRAWINGS. CONTROL JOINTS SHALL BE LOCATED AT ALL CHANGES IN MASONRY WALL HEIGHT AND AT ALL CHANGES IN MASONRY WALL THICKNESS. COORDINATE WITH THE ARCHITECT FOR ALL MASONRY CONTROL JOINT LOCATIONS.

G. TIMBER

1. CONTRACTOR SHALL SUBMIT CERTIFICATION FOR ALL LUMBER USED ON PROJECT. CERTIFICATION SHALL INDICATE LUMBER COMPLIANCE WITH DESIGN PROPERTIES INDICATED IN THESE NOTES AND ON THE DRAWINGS.
2. ALL STRUCTURAL TIMBER NOTED ON PLANS SHALL HAVE PROPERTIES AS FOLLOWS. SPF NO. 2 (OR BETTER) AND HAVE MIN. ALLOWABLE PROPERTIES AS FOLLOWS: FLO = 875 PSI, FV = 70 PSI, FC (PARALLEL) = 1,100 PSI. ALL STRUCTURAL TIMBER TO BE STAMPED IN ACCORDANCE WITH THE AMERICAN INSTITUTE OF TIMBER CONSTRUCTION'S 'CONSTRUCTION MANUAL'.
3. ALL TIMBER AND TIMBER CONSTRUCTION SHALL COMPLY WITH SPECIFICATIONS AND CODES AS SPECIFIED BELOW:
A. AMERICAN INSTITUTE OF TIMBER CONSTRUCTION: TIMBER CONSTRUCTION MANUAL.
B. ANSI / AF& PA: NATIONAL DESIGN SPECIFICATIONS FOR WOOD CONSTRUCTION 1997.
C. AMERICAN PLYWOOD ASSOCIATION: PLYWOOD DESIGN SPECIFICATION.
D. AMERICAN WOOD-PRESERVERS ASSOCIATIONS STANDARDS.
E. NATIONAL LUMBER MANUFACTURERS ASSOCIATIONS: NATIONAL DESIGN SPECIFICATION FOR STRESS-GRADE LUMBER AND ITS FASTENINGS.
4. DESIGN, FABRICATION AND INSTALLATION OF WOOD TRUSSES AND SHEET METAL CONNECTORS SHALL BE IN ACCORDANCE WITH THE FOLLOWING STANDARDS:
A. NATIONAL DESIGN STANDARD FOR METAL PLATE CONNECTED WOOD TRUSS CONSTRUCTION (ANSI/TPI 1-1995).
B. TRUSS PLATE INSTITUTE RECOMMENDED DESIGN SPECIFICATION FOR TEMPORARY BRACING OF METAL PLATE CONNECTED WOOD TRUSSES (DSB-89).
C. TRUSS PLATE INSTITUTE COMMENTARY AND RECOMMENDATIONS FOR HANDLING AND BRACING OF METAL PLATE CONNECTED WOOD TRUSSES (HIB-91).
5. ALL TIMBER CONNECTIONS ARE TO BE MADE USING PREFABRICATED CONNECTORS. TOE-NAILING WILL NOT BE PERMITTED. SUBMIT MANUFACTURER'S DATA FOR APPROVAL. FASTENERS TO BE AS MANUFACTURED BY SIMPSON OR APPROVED EQUAL.
6. ALL TIMBER CONNECTORS SHALL BE HOT DIP GALVANIZED OR STAINLESS STEEL. USING SIMPSON PRODUCTS AS A BASIS, CONNECTORS FOR PRESSURE TREATED APPLICATIONS SHALL BE 'ZMAX', POST HOT DIPPED GALVANIZED, OR STAINLESS STEEL. ANY PRODUCT SUBSTITUTIONS MUST MEET THIS MINIMUM STANDARD.
7. SIMPSON STRONG TIE CONNECTORS HAVE BEEN SPECIFIED TO MEET THE STRUCTURAL CALCULATIONS OF PLAN ELEMENTS. PRIOR TO SUBSTITUTING ANOTHER BRAND, CONFIRM LOAD CAPACITY BASED ON RELIABLE PUBLISHED TESTING DATA OR CALCULATIONS. THE ENGINEER SHALL EVALUATE AND GIVE WRITTEN APPROVAL FOR SUBSTITUTIONS PRIOR TO INSTALLATIONS.
8. ALL NAILS FOR PROJECT SHALL BE COMMON WIRE NAILS. SEE PLANS AND DETAILS FOR NAILING REQUIREMENTS. STAPLES SHALL NOT BE SUBSTITUTED FOR NAILS. WALL SHEATHING FASTENING PER MANUFACTURERS REQUIRMENTS.
9. WOOD FLOOR AND ROOF TRUSSES ARE TO BE DESIGNED FOR THE WOOD FABRICATOR BY A PROFESSIONAL ENGINEER AND SEALED CALCULATIONS ARE TO BE SUBMITTED FOR APPROVAL. TRUSS FABRICATOR TO PROVIDE PREFABRICATED HANGERS AS REQUIRED.
10. PROVIDE BRACING FOR ALL ROOF TRUSSES AS REQUIRED BY FABRICATOR.
11. PLYWOOD PANELS SHALL BE MANUFACTURED IN ACCORDANCE WITH THE LATEST PROVISIONS OF THE U.S. DEPARTMENT OF COMMERCE VOLUNTARY PRODUCT STANDARD PS-1 OR PS-2.
12. SHEATHING FOR ROOFS SHALL BE 5/8 INCH THICK 40/20 SPAN RATING APA RATED SHEATHING, EXPOSURE 1. CLASSIFICATION AND A STRUCTURAL 1 CLASSIFICATION. ALL JOINTS IN SHEATHING SHALL BE STAGGERED. USE PANEL CLIPS, TONGUE & GROOVE, OR LUMBER BLOCKING EDGE SUPPORTS AS RECOMMENDED BY APA FOR ROOF SHEATHING EDGES. NAILING SHALL COMPLY WITH REQUIREMENTS FOR PLYWOOD ROOF DIAPHRAMS (SEE PLANS).
13. SHEATHING FOR FLOORS SHALL BE ¾ INCH THICK 24" SPAN RATING APA STURD-I-FLOOR, EXPOSURE 1. ALL JOINTS IN SHEATHING SHALL BE STAGGERED. ALL EDGES IN FLOOR SHEATHING SHALL BE TONGUE AND GROOVE.
14. SHEATHING FOR EXTERIOR WALLS SHALL BE 1 1/2 INCH THICK ZIP R-SHEATHING APA RATED SHEATHING, EXPOSURE 1. ALL JOINTS IN SHEATHING SHALL BE STAGGERED. USE BLOCKING AT ALL PANEL EDGES AND NAIL AS SHOWN ON DETAILS.
15. ALL WOOD EXPOSED TO WEATHER AND/OR IN CONTACT WITH GROUND, CONCRETE, OR CMU SHALL BE PRESURE TREATED.
16. ALL TRUSS TO TRUSS CONNECTIONS SHALL BE BY THE TRUSS MANUFACTURER.
17. ALL PARALLAM PSL AND MICROLAM LVL LUMBER SHALL BE I LEVEL AS MANUFACTURED BY WEYERHAUSER OR APPROVED EQUALS.

H. WOOD TRUSS BRACING

1. WOOD TRUSSES SHALL BE DESIGNED, BRACED AND ERECTED IN ACCORDANCE WITH THE FOLLOWING STANDARDS.
A. ANSI/TPI 1-1995 NATIONAL DESIGN STANDARD FOR METAL PLATE CONNECTED WOOD TRUSS CONSTRUCTION.
B. TRUSS PLATE INSTITUTE DSB-89 RECOMMENDED DESIGN SPECIFICATION FOR TEMPORARY BRACING OF METAL PLATE CONNECTED WOOD TRUSSES.
C. TRUSS PLATE INSTITUTE HIB-91 - COMMENTARY AND RECOMMENDATIONS FOR HANDLING INSTALLING AND BRACING METAL PLATE CONNECTED WOOD TRUSSES.
2. BRACING IN THE PLANE OF THE WEB MEMBERS:
A. THE TRUSS FABRICATOR SHALL PROVIDE AND LOCATE CONTINUOUS LATERAL BRACING FOR EACH TRUSS WEB MEMBER AS REQUIRED.
B. LATERAL BRACING SHALL BE RESTRAINED BY DIAGONAL BRACING (MIN. 2" THICK NOMINAL LUMBER). THIS BRACING IS TO BE CONTINUOUS.
C. A MINIMUM OF TWO ROWS OF DIAGONAL BRACING IS REQUIRED. ONE AT EACH VERTICAL WEB MEMBER CLOSEST TO BEARING LOCATIONS.
3. THE BOTTOM CHORDS SHALL BE BRACED BY CONTINUOUS LATERAL BRACING SPACED AT 8 TO 10 FEET NAILED TO TOP OF THE BOTTOM CHORD. DIAGONALS PLACED AT 45 DEGREES TO THE LATERAL BRACES SHALL BE LOCATED AT EACH END. IF BUILDING EXCEEDS 60 FEET IN LENGTH, DIAGONAL BRACING SHOULD BE REPEATED AT 20 FOOT INTERVALS.
4. TOP CHORD BRACING: ROOF SHEATHING APPLIED DIRECTLY TO TOP CHORD, PROPERLY LAPPED AND NAILED TO DEVELOP DIAPHRAM ACTION, BRACING IS NOT REQUIRED.
5. WOOD ROOF TRUSSES ARE TO BE DESIGNED FOR THE WOOD FABRICATOR BY A PROFESSIONAL ENGINEER AND SEALED CALCULATIONS ARE TO BE SUBMITTED FOR APPROVAL.
6. ALL GABLE END TRUSSES SHALL BE DESIGNED AND BRACED TO SUPPORT COMPONENT AND CLADDING WIND LOAD ON EXPOSED FACE OF TRUSS.

FRAMING NOTES

1. ALL FRAMING TO MEET THE REQUIREMENTS OF THE 2020 EDITION OF THE BUILDING CODE OF NEW YORK AND THE TOWN OF CLARKSTOWN.

2. ALL EXTERIOR WALLS AND INTERIOR BEARING PARTITIONS TO HAVE HEADERS OVER WINDOWS, DOORS AND OPENINGS AS FOLLOWS:

HEADER SCHEDULE

LOCATION/OPENING SIZE		DESCRIPTION
EXTERIOR OPENINGS	2'-0" TO 3'-4"	(3) 2 X 10'S WITH (1) JACK AT EACH END
EXTERIOR OPENINGS	3'-5" TO 6'-0"	(3) 2 X 10'S WITH (2) JACKS AT EACH END
EXTERIOR OPENINGS	6'-1" TO 10'-0"	(2) MICRO-LAM LVL 1 ¾" X 9 ¼" W/ (3) JACKS AT EACH END
INTERIOR OPENINGS	2'-0" TO 3'-4"	(3) 2 X 10'S WITH (1) JACK AT EACH END
INTERIOR OPENINGS	3'-5" TO 4'-6"	(3) 2 X 10'S WITH (1) JACKS AT EACH END
INTERIOR OPENINGS	4'-7" TO 6'-0"	(2) MICRO-LAM LVL 1 ¾" X 9 ¼" W/ (2) JACKS AT EACH END
INTERIOR OPENINGS	6'-1" TO 9'-0"	(2) MICRO-LAM LVL 1 ¾" X 11 ⅞" W/ (3) JACKS AT EACH END

3. ALL EXTERIOR WALLS TO BE
A. BASEMENT - 2 X 6 @ 12" O.C. - 9'-1 ¼" HIGH
B. FIRST FLOOR - 2 X 6 @ 12" O.C. - 9'-1 ¼" HIGH
C. SECOND - 2 X 6 @ 24" O.C. - 9'-1 ¼" HIGH
D. STUDS TO ALIGN WITH FLOOR & ROOF TRUSSES - SEE FRAMING PLANS FOR STUD/TRUSS SPACING. STARTING POINTS

4. ALL INTERIOR BEARING PARTITIONS
A. BASEMENT AND FIRST FLOOR - 2 X 6 @ 12" O.C. - (2 X 4 @ 24" O.C. AS NOTED)
B. SECOND FLOOR - 2 X 6 @ 24" O.C. - (2 X 4 @ 24" O.C. AS NOTED)
C. STUDS TO ALIGN WITH FLOOR & ROOF TRUSSES - SEE FRAMING PLANS FOR STUD/TRUSS SPACING. STARTING POINTS

5. PROVIDE FIRE BLOCKING & DRAFT STOPPING AS REQUIRED IN SECTION 718 OF THE 2015 EDITION OF THE INTERNATIONAL BUILDING CODE. NOTE: THE BUILDING WILL BE FULLY SPRINKLED IN ACCORDANCE OF NFPA 13 AND SECTION 903.1.1 OF THE 2015 EDITION OF THE INTERNATIONAL BUILDING CODE.

7. TRUSS DESIGN SHALL BE SUBMITTED TO THE ARCHITECT FOR APPROVAL PRIOR TO FABRICATION. TRUSSES TO BE NYS CODE APPROVED, CERTIFIED BY A PROFESSIONAL ENGINEER. TRUSS SPECIFICATIONS TO BE PRESENTED TO THE LOCAL BUILDING DEPARTMENT.

A. TRUSS HEIGHTS - FLOOR TRUSSES - AS NOTED

B. ALL FLOOR TRUSSES TO BE SPACED 24" O.C. MAX.

C. ROOF TRUSS PITCH
1. MAIN ROOF 5 : 12
2. PORCH ROOF TRUSSES: AS NOTED ON THE ROOF PLAN

D. TRUSS LOADING

1. ROOF LOADS
   - GROUND SNOW LOAD: 50 PSF
   - LIVE LOAD: 20 PSF
   - TOP DEAD: 25 PSF
   - BOTTOM DEAD: 15 PSF

2. FLOOR LOADS - FIRST & SECOND FLOORS (APARTMENTS)
   - TOP LIVE: 40 PSF
   - TOP DEAD: 10 PSF
   - BOTTOM DEAD: 10 PSF

3. FLOOR LOADS - FIRST & SECOND (CORRIDOR, AND PUBLIC ROOMS)
   - TOP LIVE: 100 PSF
   - TOP DEAD: 10 PSF
   - BOTTOM DEAD: 10 PSF

4. DEFLECTION - LIMITED TO 1/360

8. STEEL LINTEL SCHEDULE
AT 8" CONCRETE BLOCK: (2) 3 ½" X 4" X ⅜"

9. PARALLAM SCHEDULE
ML-1 (4) 2 x 10s
ML-2 (1) 7" x 16" 2.OE PARALLAM
ML-3 (1) 5-1/4" x 14" 2.OE PARALLAM
ML-4 (1) 3-1/2" x 9-1/4 2.OE PARALLAM

DESIGN INFORMATION

1. GROUND SNOW LOAD: 50 PSF

2. WIND
ULTIMATE DESIGN WIND SPEED, VULT 115 MPF
NOMINAL DESIGN WIND SPEED, VASD 89 MPF

WIND LOAD REPORT
CODE STANDARD ASCE 7-10

BUILDING INPUTS:
BUILDING WIDTH, W 63'-4"
BUILDING LENGTH, L 97'-8"
WALL HEIGHT, z 42'-0"
MEAN ROOF HEIGHT, h 42'-0"
PARAMETERS:
RISK CATEGORY II
EXPOSURE CATEGORY C
BASIC WIND SPEED, V 115 MPH
ENCLOSURE CLASSIFICATION ENCLOSED
TOPOGRAPHIC FACTOR, KZT 1.0
DIRECTIONALITY FACTOR, KD .85
VELOCITY PRESSURE 27.8 PSF

3. SEISMIC
SEISMIC USE GROUP - GROUP II
SITE CLASS = D
IMPORTANCE FACTOR, IE = 1.00 (CATEGORY I)
SMS = 0.391
SM1 = 0.171
SDS = 0.0.18, SEISMIC DESIGN CATEGORY = B GOVERNS
SD1 = 0.106, SEISMIC DESIGN CATEGORY = B GOVERNS

SIMPLIFIED ANALYSIS PROCEDURE (PER 1617.5)
SEISMIC BASE SHEAR, V = 0.0482W

4. SOIL DESIGN LOAD-BEARING VALUE
ALLOWABLE FOUNDATION PRESSURE = 2,500 PSF ON EXISTING SOIL.

PERMIT SET
05-12-21

SPECIAL INSPECTIONS

THE OWNER WILL EMPLOY ONE OR MORE SPECIAL INSPECTORS TO PROVIDE INSPECTIONS DURING CONSTRUCTION ON THE TYPES OF WORK LISTED BELOW. THE SPECIAL INSPECTOR SHALL BE A QUALIFIED PERSON WHO SHALL DEMONSTRATE COMPETENCE, TO THE SATISFACTION OF THE CODE ENFORCEMENT OFFICIAL, FOR INSPECTION OF THE PARTICULAR TYPE OF CONSTRUCTION.

THE SPECIAL INSPECTORS WILL KEEP RECORDS OF INSPECTIONS. THE SPECIAL INSPECTOR WILL FURNISH INSPECTION REPORTS TO THE CODE ENFORCEMENT OFFICIAL, AND TO THE REGISTERED DESIGN PROFESSIONAL IN RESPONSIBLE CHARGE. REPORTS SHALL INDICATE THAT WORK INSPECTED WAS DONE IN CONFORMANCE TO APPROVED CONSTRUCTION DOCUMENTS. DISCREPANCIES SHALL BE BROUGHT TO THE IMMEDIATE ATTENTION OF THE CONTRACTOR FOR CORRECTION. IF THE DISCREPANCIES ARE NOT CORRECTED, THE DISCREPANCIES SHALL BE BROUGHT TO THE ATTENTION OF THE CODE ENFORCEMENT OFFICIAL AND TO THE REGISTERED DESIGN PROFESSIONAL IN RESPONSIBLE CHARGE PRIOR TO THE COMPLETION OF THAT PHASE OF THE WORK.

LIST OF SPECIAL INSPECTIONS

1. EXCAVATION AND PLACEMENT OF STRUCTURAL FILL - AS OUTLINED IN THE GEOTECHNICAL REPORT
2. CONCRETE WORK - SEE CONCRETE SPECIAL INSPECTIONS SCHEDULE
3. MASONRY - SEE MASONRY SPECIAL INSPECTIONS SCHEDULE
4. WOOD FRAME CONSTRUCTION
   A. FRAMING MEMBERS & SHEATHING MATERIALS FOR COMPLIANCE WITH THE PLANS & SPECIFICATIONS.
   B. WOOD FRAME CONNECTIONS FOR COMPLIANCE WITH THE PLANS, SPECIFICATIONS & 2020 BCNYS.

WALL CONSTRUCTION NAILING REQUIREMENTS
(UNLESS NOTED OTHERWISE)

BUILDING ELEMENT	NAIL SIZE AND TYPE AND NUMBER	LOCATION
STUD TO SOLE PLATE	(2) 16d COMMON	END NAIL
CAP PLATE TO STUD	(2) 16d COMMON	END NAIL
DOUBLE STUDS	16d COMMON @ 16" O.C.	FACE NAIL
CORNER STUDS	16d COMMON @ 16" O.C.	FACE NAIL
SOLE PLATE TO FLOOR TRUSS OR BLOCKING	16d COMMON @ 16" O.C.	FACE NAIL
INTERIOR-BRACED WALL SOLE PLATE TO PARALLEL FLOOR TRUSS	16d COMMON @ 12" O.C.	FACE NAIL
DOUBLE CAP PLATE	16d COMMON @ 16" O.C.	FACE NAIL
CAP PLATE LAPS	(2) 16d COMMON	FACE NAIL
INTERIOR-BRACED WALL TOP PLATE TO TRUSS OR BLOCKING	16d COMMON @ 16" O.C.	FACE NAIL

1. ALL NAILS MUST BE INSTALLED IN ACCORDANCE WITH THE 2020 EDITION OF THE BCNYS

CONCRETE SPECIAL INSPECTION SCHEDULE

VERIFICATION AND INSPECTION	CONTINUOUS	PERIODIC	REFERENCED STANDARD	BC-NYS REFERENCE
1. INSPECTION OF REINFORCING STEEL, INCLUDING PLACEMENT.		X	ACI 318: 3.5, 7.1-7.7	1903.5, 1907.1, 1907.7
2. INSPECTION OF REINFORCING STEEL WELDING IN ACCORDANCE WITH TABLE 1704.3, ITEM 5B.			AWS D1.4 ACI 318: 3.5.2	1903.5.2
3. VERIFYING USE OF REQUIRED DESIGN MIX.		X	ACI 318; CH. 4, 5.2-5.4	1904, 1905.2-1905.4,
4. SAMPLING FRESH CONCRETE AND PERFORMING SLUMP, AIR CONTENT AND DETERMINING THE TEMPERATURE OF FRESH CONCRETE AT THE TIME OF MAKING SPECIMENS FOR STRENGTH TESTS.	X		ASTM C 172 ASTM C 31 ACI 318: 5, 6, 5.8	1905.6,
5. INSPECTION OF CONCRETE PLACEMENT FOR PROPER APPLICATION TECHNIQUES.	X		ACI 318: 5.9, 5.10	1905.9, 1905.10,
6. INPECTION FOR MAINTENANCE OF SPECIFIED CURING TEMPERATURE AND TECHNIQUES.		X	ACI 318: 5.11-5.13	1905.11, 1905.13, 1914.9

MASONRY SPECIAL INSPECTION SCHEDULE

INSPECTION TASK	FREQUENCY OF INSPECTION		REFERENCE FOR CRITERIA		
	CONTINUOUS DURING TASK LISTED	PERIODICALLY DURING TASK LISTED	BC-NYS SECTION	ACI 530/ ASCE 5/TMS 402[a]	ACI 530.1/ ASCE 6/TMS 602[a]
1. AS MASONRY CONSTRUCTION BEGINS, THE FOLLOWING SHALL BE VERIFIED TO ENSURE COMPLIANCE: A. PROPORTIONS OF SITE-PREPARED MORTAR. B. CONSTRUCTION OF MORTAR JOINTS. C. LOCATION OF REINFORCEMENT AND CONNECTORS	-	X X X	-	-	ART. 2.6A ART. 3.3B ART. 3.4 AND ART.3.6A ART. 3.6B
2. THE INSPECTION PROGRAM SHALL VERIFY: A. SIZE AND LOCATION OF STRUCTURAL ELEMENTS.		X			3.3G
B. TYPE, SIZE AND LOCATION OF ANCHORS, INCLUDING OTHER DETAILS OF ANCHORAGE OF MASONRY TO STRUCTURAL MEMBERS, FRAMES OR OTHER CONSTRUCTION.		X		SEC. 1.15.4, 2.1.2	
C. SPECIFIED SIZE, GRADE AND TYPE OF REINFORCEMENT.		X		SEC. 1.12	ART. 2.4,3.4
D. WELDING OF REINFORCING BARS.	X			SEC. 2.1.8.6 SEC. 2.1.8.6.2	
E. PROTECTION OF MASONRY DURING COLD WEATHER (TEMPERATURE BELOW 40 F) OR NOT WEATHER (TEMPERATURE ABOVE 90 F)		X	SEC.2104.3, 2104.4		ART. 1.8
3. PRIOR TO GROUTING, THE FOLLOWING SHALL BE VERIFIED TO ENSURE COMPLIANCE. A. GROUT SPACE IS CLEAN.	-	X	-		ART. 3.2D
B. PLACEMENT OF REINFORCEMENT AND CONNECTORS		X		SEC. 1.12	ART. 3.4
C. PROPORTIONS OF SITE-PREPARED GROUT AND PRESTRESSING GROUT FOR BONDED TENDONS.		X			ART. 2.6B
D. CONSTRUCTION OF MORTAR JOINTS.		X			ART. 3.3B
4. A. GROUT PLACEMENT SHALL BE VERIFIED TO ENSURE COMPLIANCE WITH CODE AND CONSTRUCTION DOCUMENT PROVISIONS.	X	-	-	-	ART. 3.2D
5. PREPARATION OF ANY REQUIRED GROUT SPECIMENS, MORTAR SPECIMENS AND/OR PRISMS SHALL BE OBSERVED.	X	-	SEC. 2105.3, 2105.4 2105.5	-	ART. 1.4
6. COMPLIANCE WITH REQUIRED INSPECTION PROVISIONS OF THE CONSTRUCTION DOCUMENTS AND THE APPROVED SUBMITTALS SHALL BE VERIFIED.	-	X	-	-	ART. 1.5

PLOTTED 09/17/20 11:41:12 AM
FILE NAME L Dor Apartments (Clarkstown Senior Living Apt)\ ST1 -ST5 - Framing Plans 09-17-20.dwg
X-Refs:

DATE: 05/03/21
REVISED:

PROJECT NO:
DESIGNED BY:
DRAWN BY:
CHECKED BY:
SCALE: AS NOTED
NOTES:

STRUCTURAL NOTES

HARRIS A. SANDERS
ARCHITECTS, P.C.
252 WASHINGTON AVENUE, ALBANY, NEW YORK 12210

L'DOR ADULT CARE FACILITY
WEST CLARKSTOWN ROAD
NEW CITY N.Y. 10956

REGISTERED ARCHITECT ★ DANIEL PAUL SANDERS 024004 ★ STATE OF NEW YORK

SHEET NO:
ST1
OF:

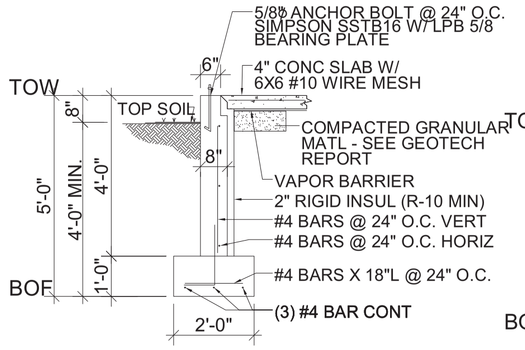

A ST2 SECTION
SCALE: 3/8"=1'-0"

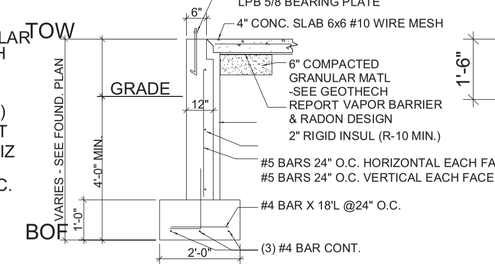

B ST2 SECTION
SCALE: 3/8"=1'-0"

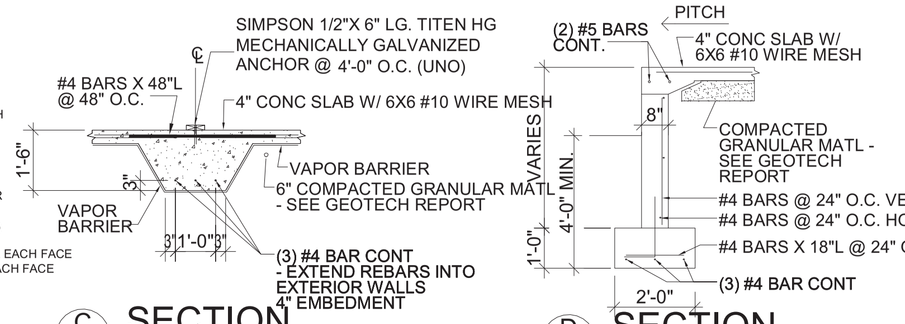

C ST2 SECTION
SCALE: 3/8"=1'-0"

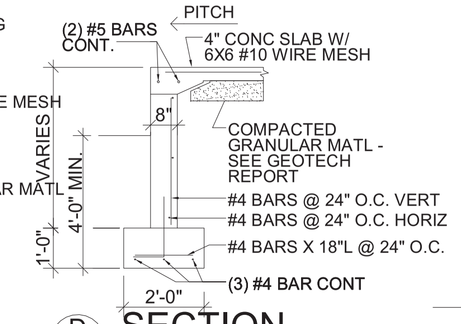

D ST2 SECTION
SCALE: 3/8"=1'-0"

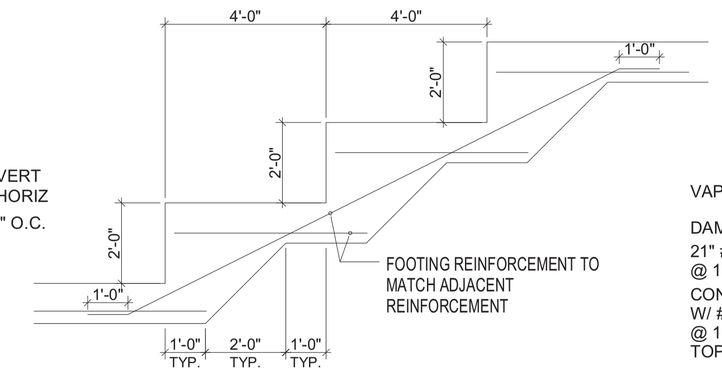

E ST2 TYPICAL STEP FOOTING DETAIL
SCALE: 3/8"=1'-0"

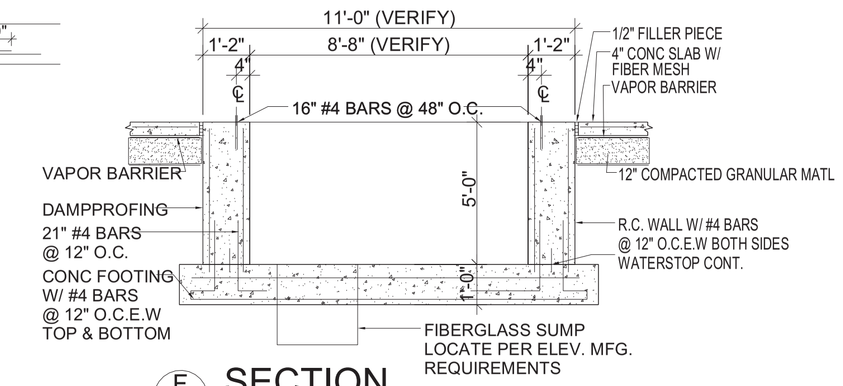

F ST2 SECTION
SCALE: 3/8"=1'-0"

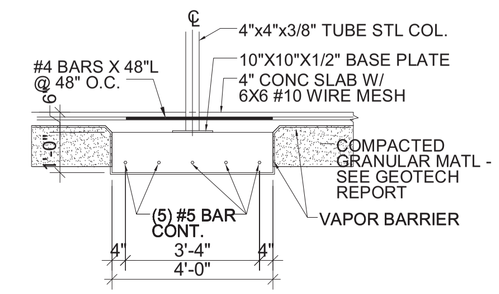

G ST2 SECTION
SCALE: 3/8"=1'-0"

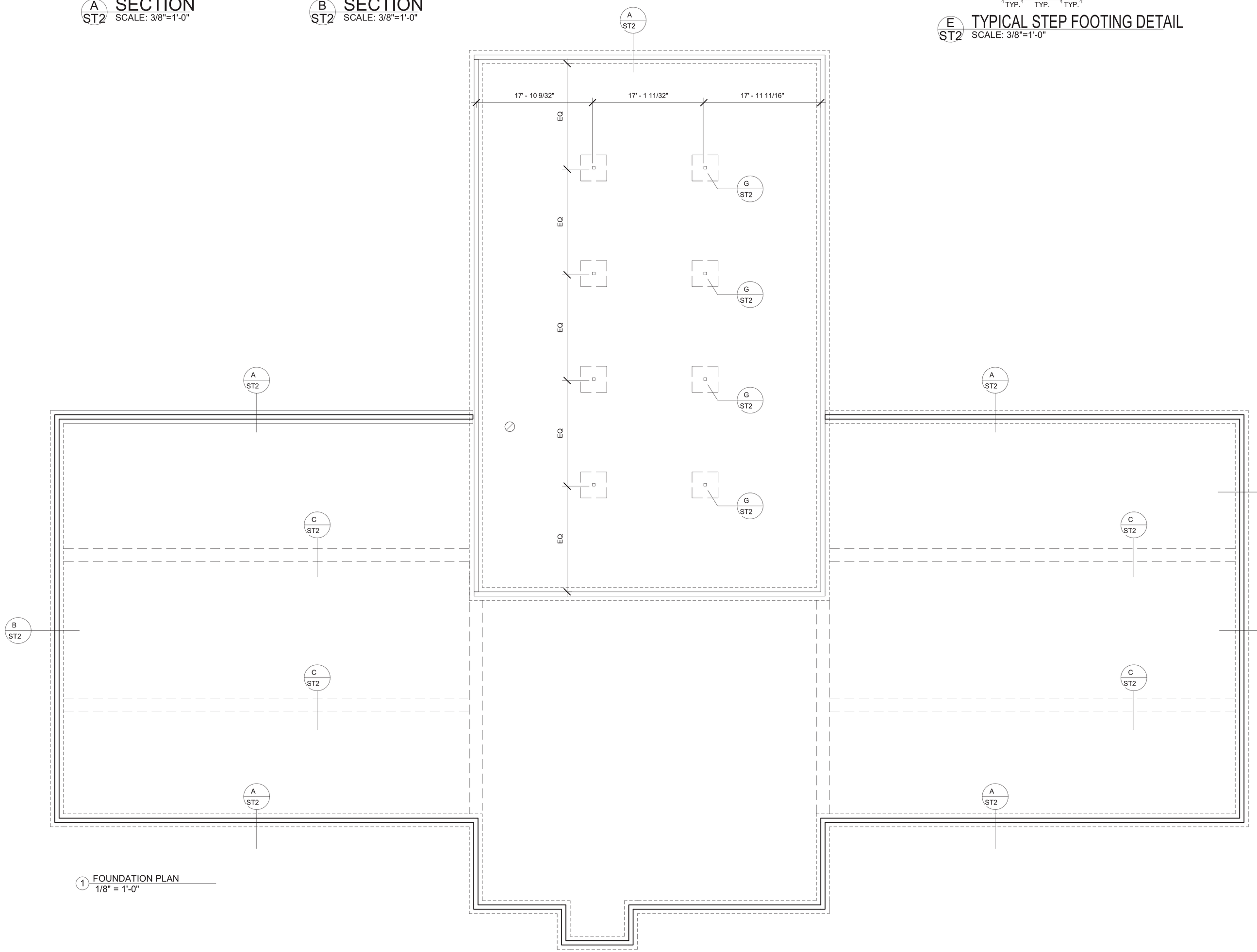

1 FOUNDATION PLAN
1/8" = 1'-0"

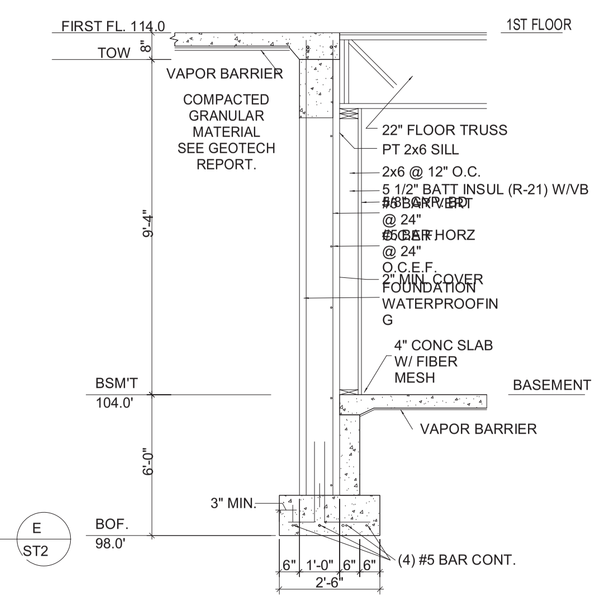

H ST2 SECTION - TYPICAL
SCALE: 3/8"=1'-0"

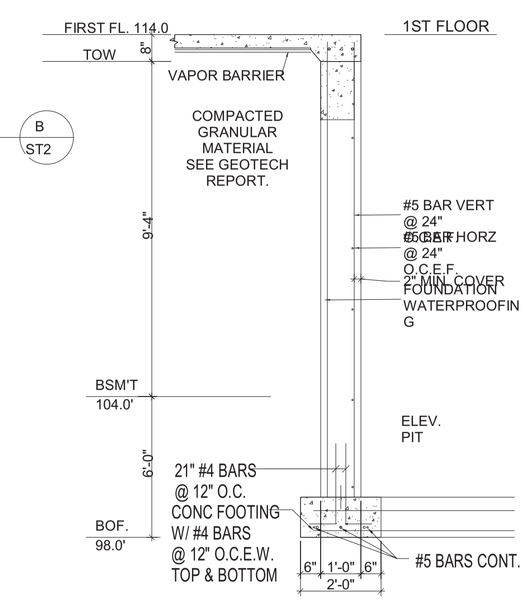

J ST2 SECTION - TYPICAL
SCALE: 3/8"=1'-0"

PERMIT SET
05-12-2021

Drawn by	AA
Checked by	DS
Scale	As indicated
Date	Project Status
Revision Date	

PROPOSED FOUNDATION PLAN

HARRIS A. SANDERS, ARCHITECTS, P.C.
252 WASHINGTON AVENUE, ALBANY, NEW YORK 12210

L'Dor Assisted living
West Clarkstown Road, New City, New York

REGISTERED ARCHITECT
DANIEL PAUL SANDERS
024004
STATE OF NEW YORK

ST2

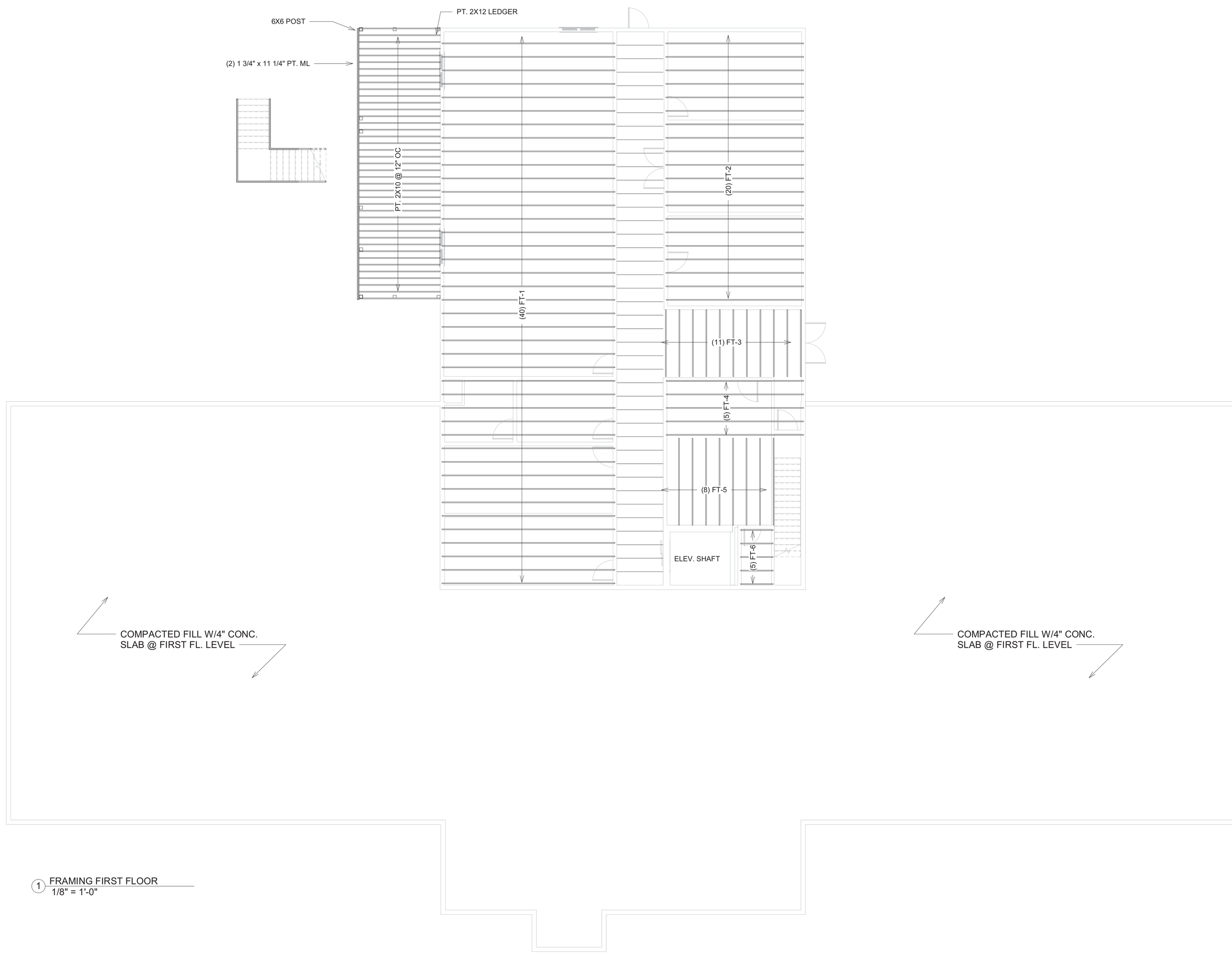

1 FRAMING FIRST FLOOR
1/8" = 1'-0"

PERMIT SET
05-12-2021

Drawn by	AA
Checked by	DS
Scale	1/8" = 1'-0"
Date	Project Status
Revision Date	

FIRST FLOOR FRAMING PLAN

HARRIS A. SANDERS, ARCHITECTS, P.C.
252 WASHINGTON AVENUE, ALBANY, NEW YORK 12210

L'Dor Assisted living
West Clarkstown Road, New City, New York

REGISTERED ARCHITECT
DANIEL PAUL SANDERS
024004
STATE OF NEW YORK

ST3

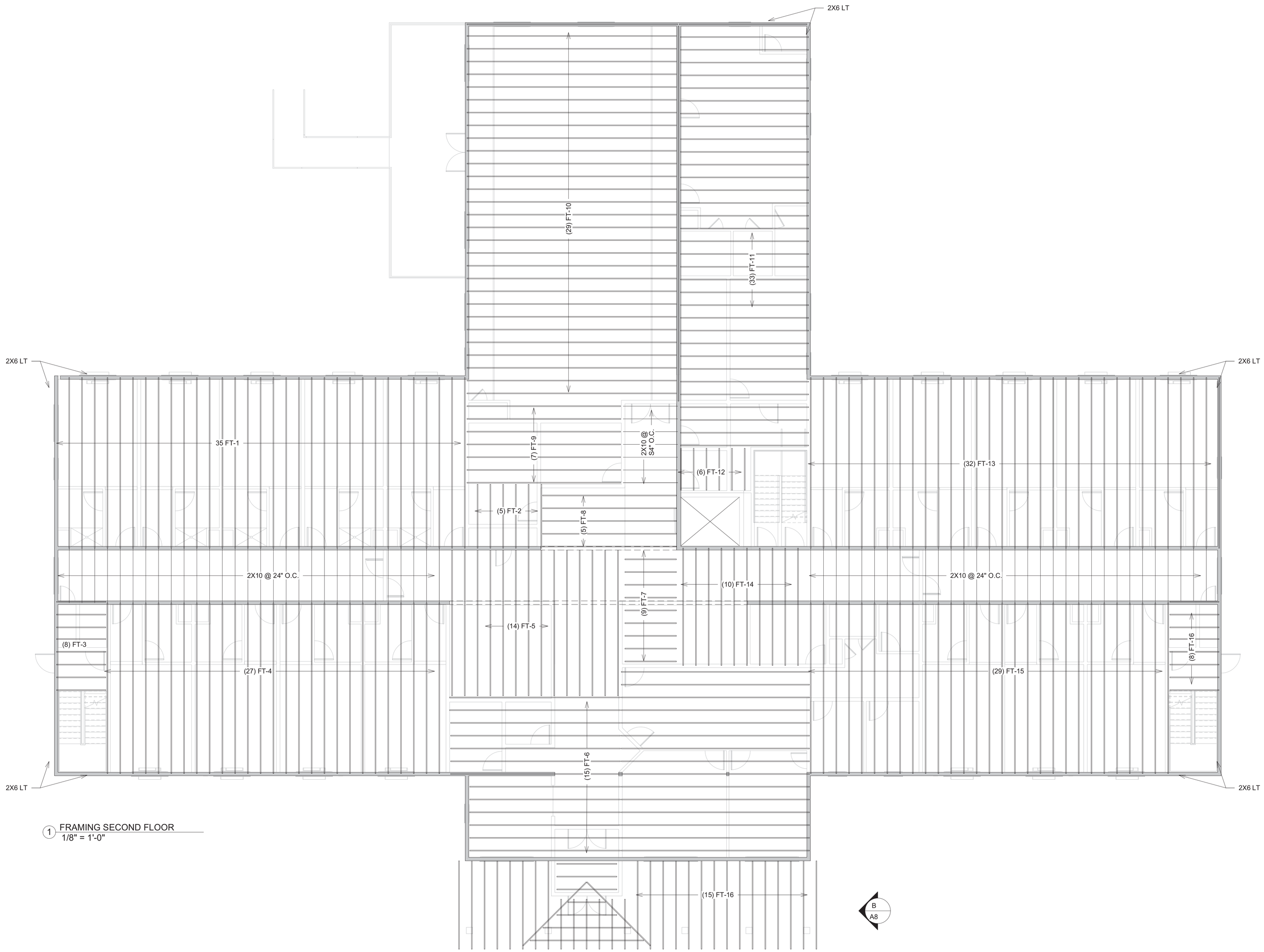

1 FRAMING SECOND FLOOR
1/8" = 1'-0"

PERMIT SET
05-12-2021

Drawn by	AA
Checked by	DS
Scale	1/8" = 1'-0"
Date	Project Status
Revision Date	

SECOND FLOOR FRAMING PLAN

HARRIS A. SANDERS, ARCHITECTS, P.C.
252 WASHINGTON AVENUE, ALBANY, NEW YORK 12210

L'Dor Assisted living
West Clarkstown Road, New City, New York

REGISTERED ARCHITECT
DANIEL PAUL SANDERS
024004
STATE OF NEW YORK

ST4

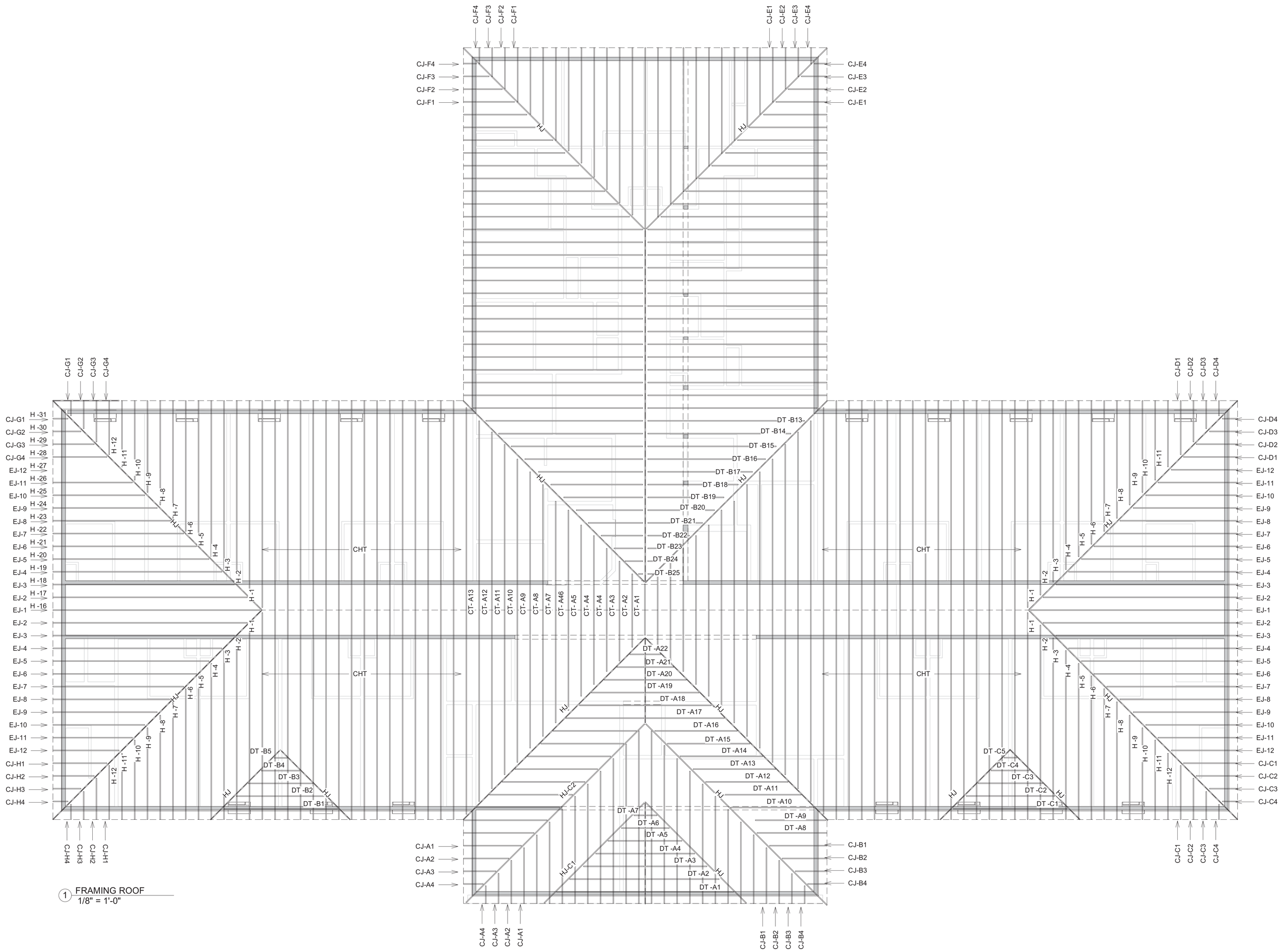

1 FRAMING ROOF
1/8" = 1'-0"

PERMIT SET
05-12-2021

Drawn by	AA
Checked by	DS
Scale	1/8" = 1'-0"
Date	Project Status
Revision Date	

ROOF FRAMING PLAN

HARRIS A. SANDERS, ARCHITECTS, P.C.
252 WASHINGTON AVENUE, ALBANY, NEW YORK 12210

L'Dor Assisted living
West Clarkstown Road, New City, New York

REGISTERED ARCHITECT
DANIEL PAUL SANDERS
024004
STATE OF NEW YORK

ST5

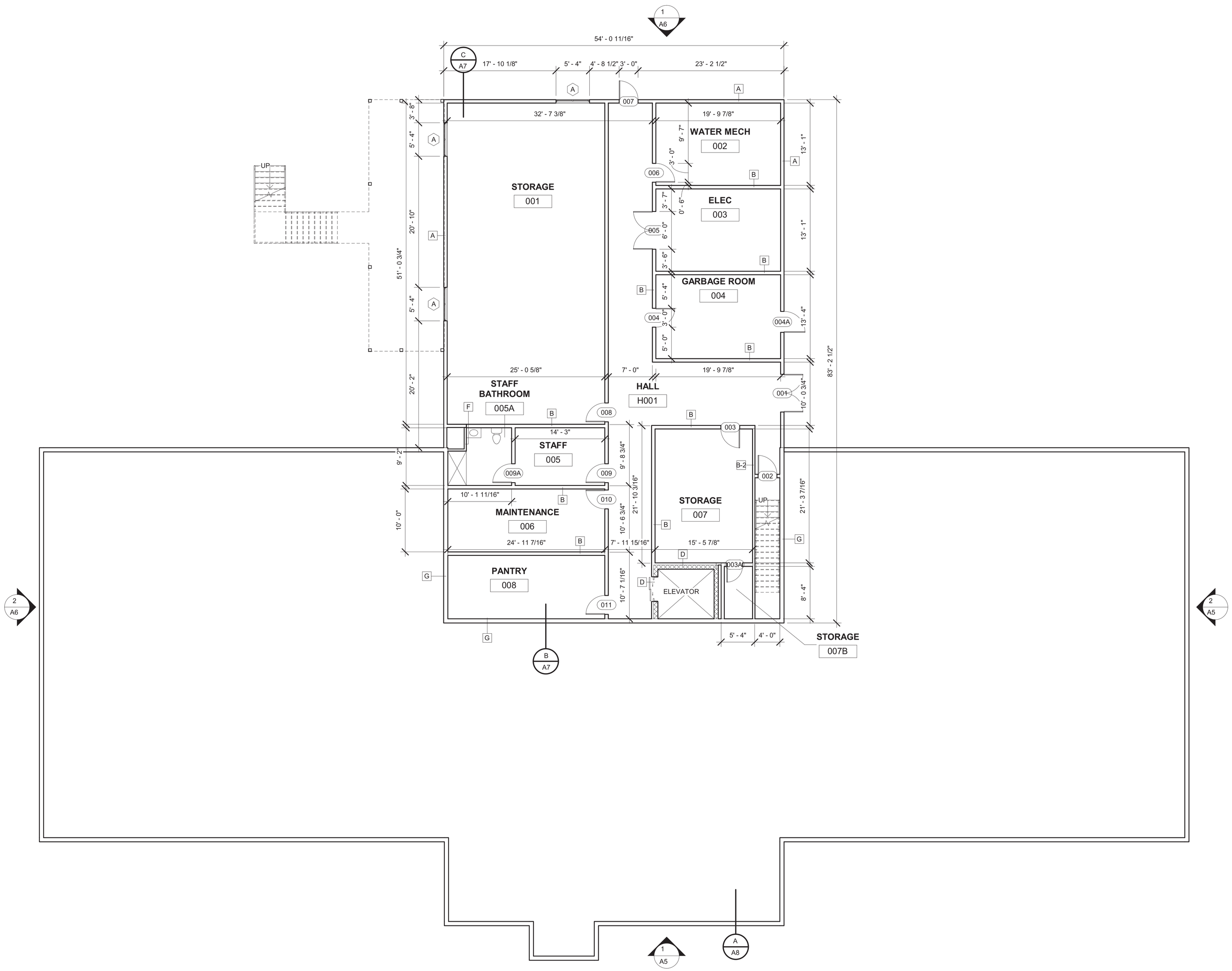

1 PROPOSED BASEMENT FLOOR PLAN
1/8" = 1'-0"

WALL & PARTITION TYPES

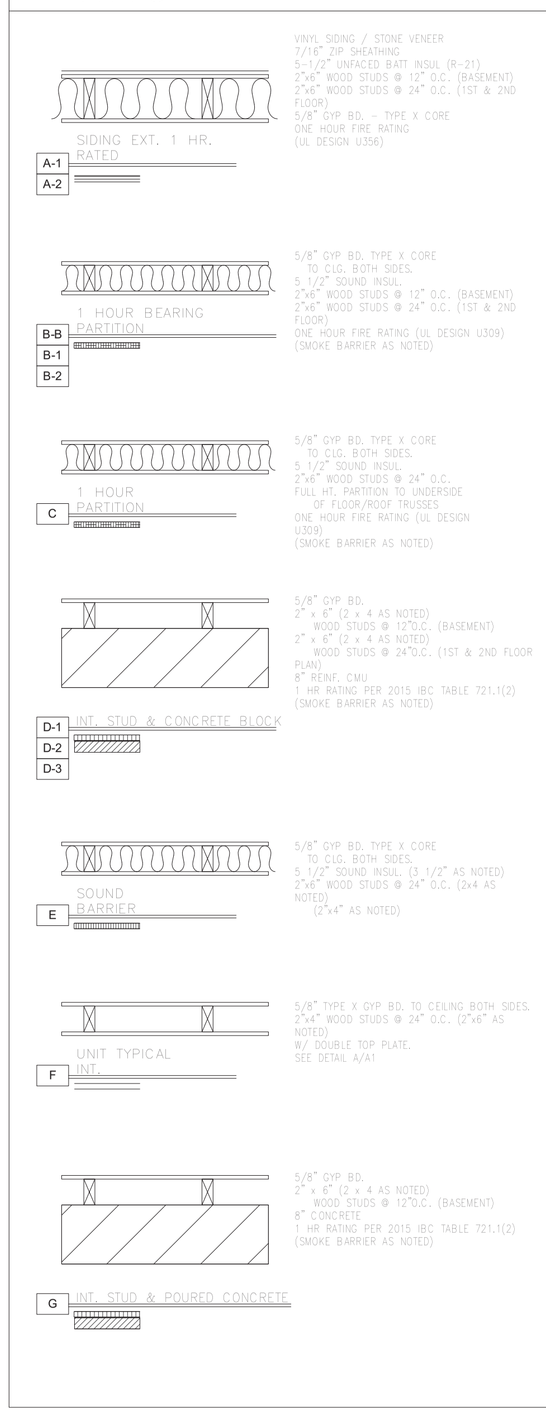

Drawn by	AA
Checked by	DS
Scale	1/8" = 1'-0"
Date	Project Status
Revision Date	

BASEMENT FLOOR PLAN

HARRIS A. SANDERS, ARCHITECTS, P.C.
252 WASHINGTON AVENUE, ALBANY, NEW YORK 12210

L'Dor Assisted living
West Clarkstown Road, New City, New York

REGISTERED ARCHITECT
DANIEL PAUL SANDERS
024004
STATE OF NEW YORK

PERMIT SET
05-12-2021

A1

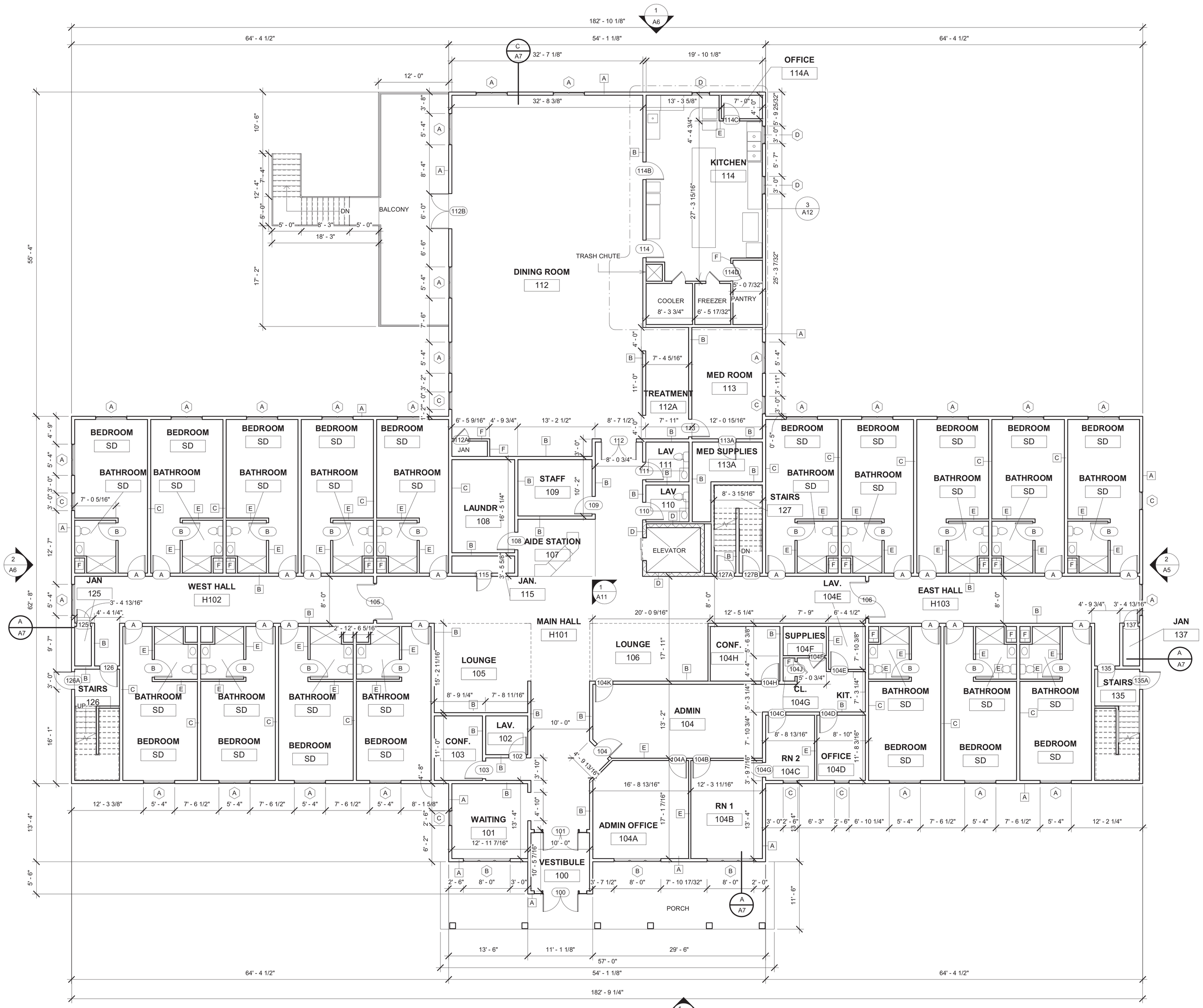

1 PROPOSED FIRST FLOOR PLAN
1/8" = 1'-0"

WALL & PARTITION TYPES

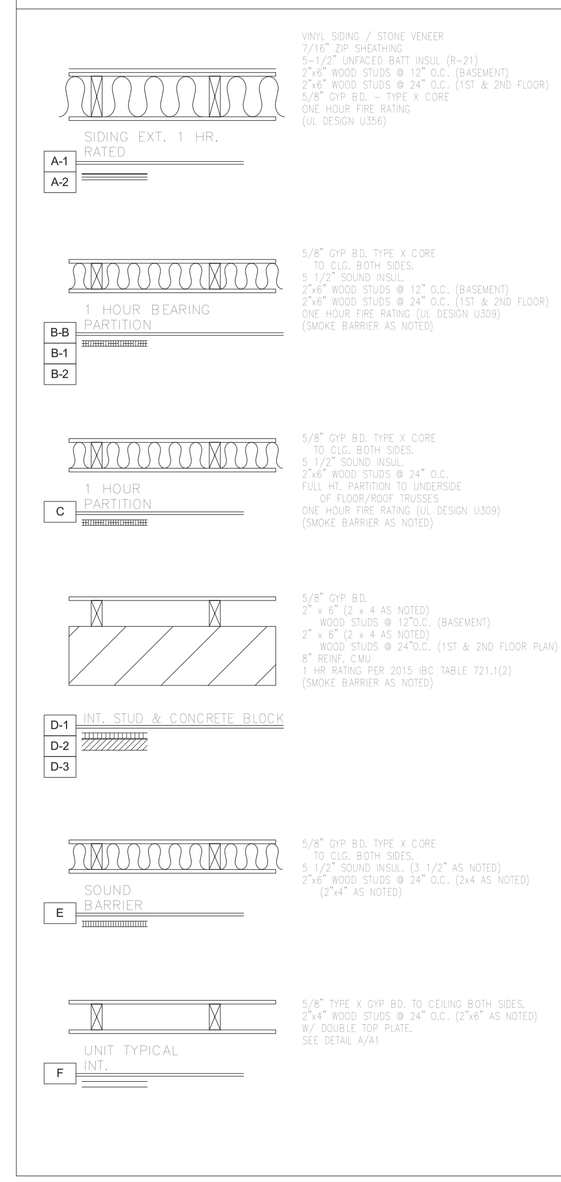

Drawn by	AA
Checked by	DS
Scale	1/8" = 1'-0"
Date	Project Status
Revision Date	

FIRST FLOOR PLAN

HARRIS A. SANDERS, ARCHITECTS, P.C.
252 WASHINGTON AVENUE, ALBANY, NEW YORK 12210

L'Dor Assisted living
West Clarkstown Road, New City, New York

REGISTERED ARCHITECT DANIEL PAUL SANDERS 024004 STATE OF NEW YORK

PERMIT SET
05-12-2021

A2

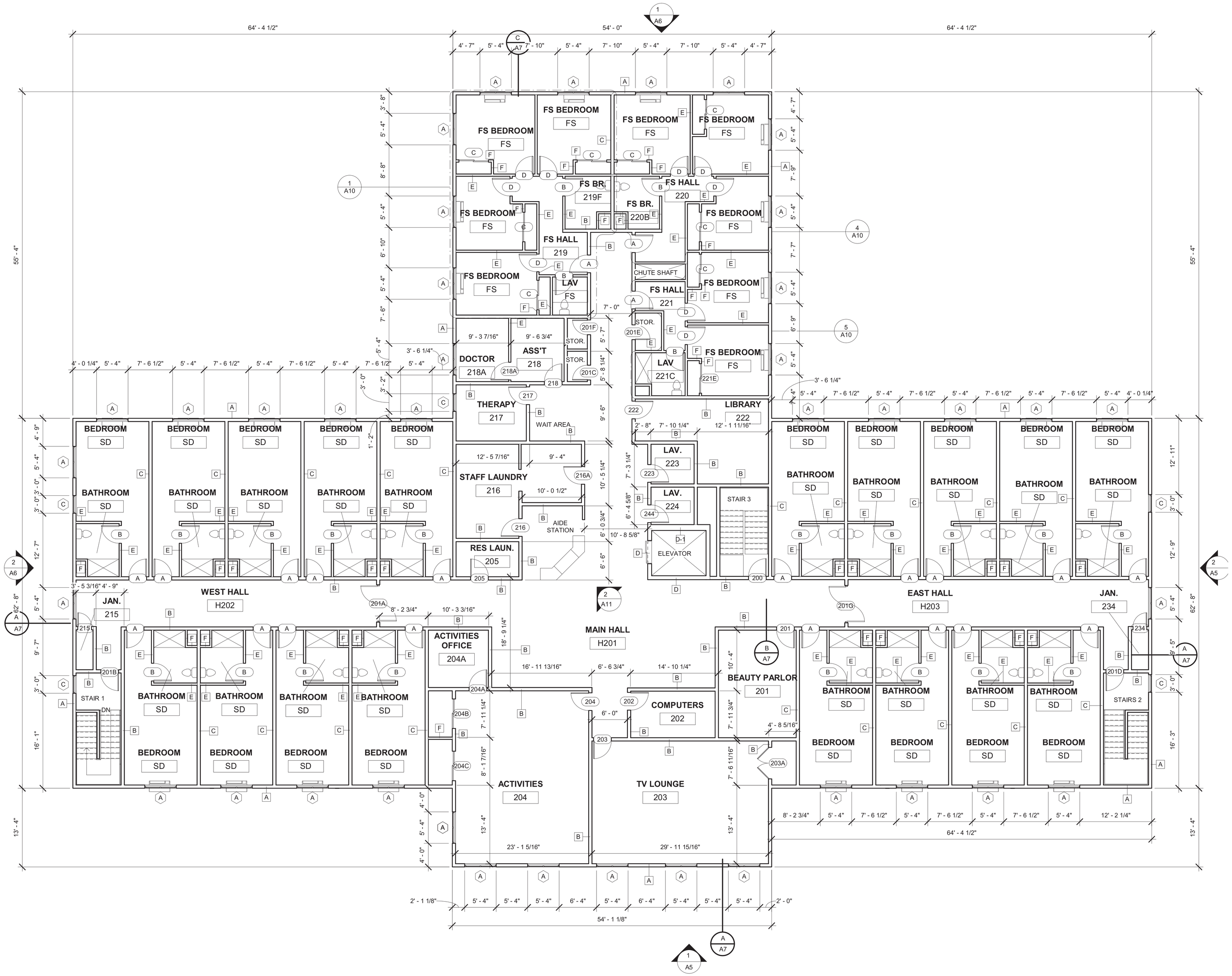

1 PROPOSED SECOND FLOOR PLAN
1/8" = 1'-0"

WALL & PARTITION TYPES

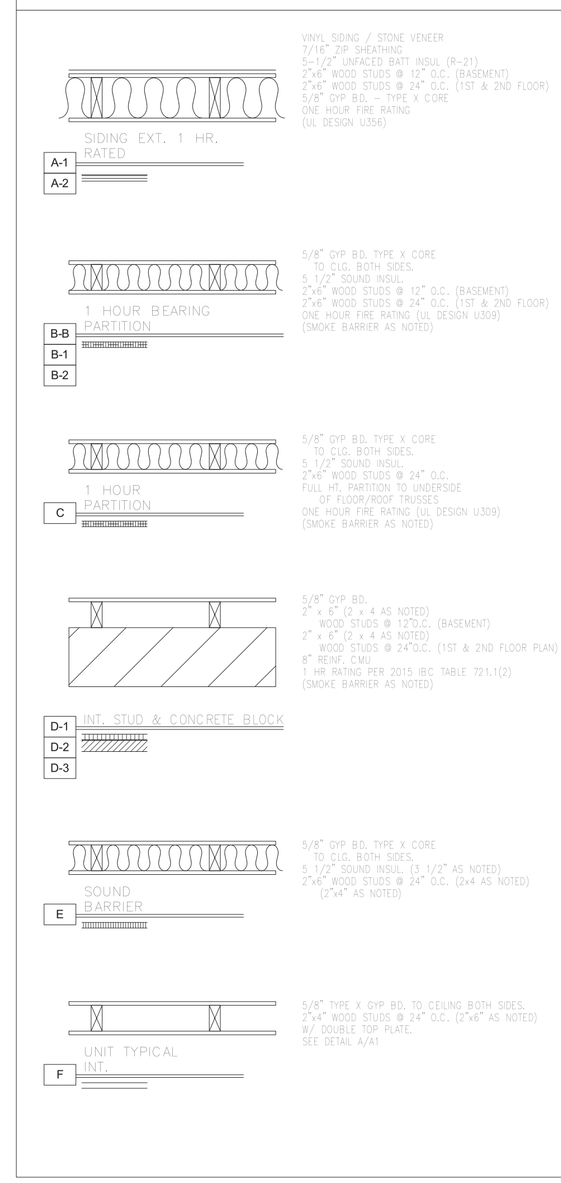

Drawn by	AA
Checked by	DS
Scale	1/8" = 1'-0"
Date	Project Status
Revision Date	

SECOND FLOOR PLAN

HARRIS A. SANDERS, ARCHITECTS, P.C.
252 WASHINGTON AVENUE, ALBANY, NEW YORK 12210

L'Dor Assisted living
West Clarkstown Road, New City, New York

REGISTERED ARCHITECT
DANIEL PAUL SANDERS
024004
STATE OF NEW YORK

PERMIT SET
05-12-2021

A3

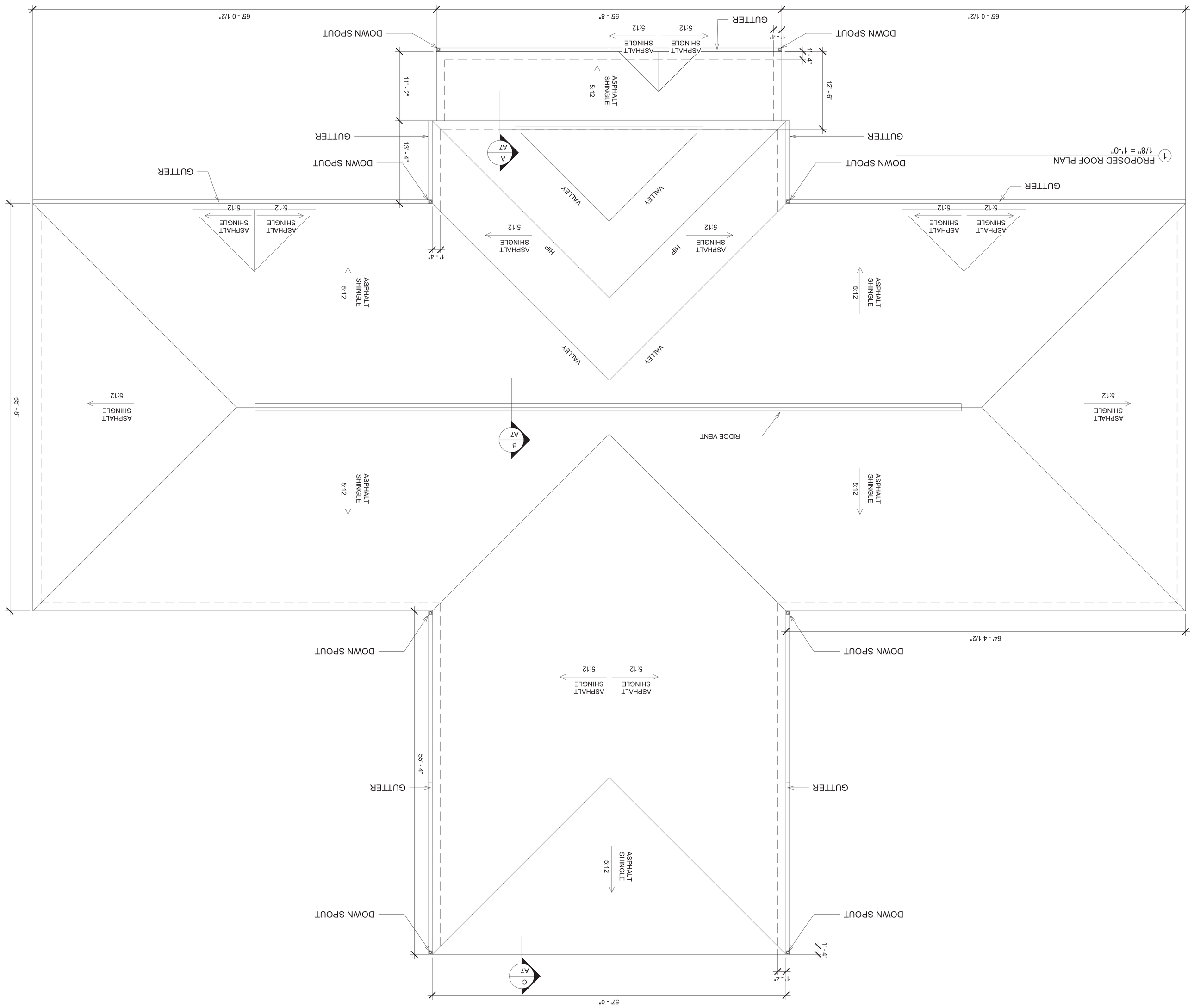

1 PROPOSED ROOF PLAN
1/8" = 1'-0"

NOTE: ATTIC VENTS (AV)
ATTIC VENTS SHALL BE EQUAL TO
FAMCO GBV 22 (FREE AREA = 380 SQ IN)
W/ FAMCO ROUND VENT BASE FB 22.
INSTALL IN ACCORDANCE WITH THE
MANUFACTURE'S REQUIREMENTS.

PERMIT SET
05-12-2021

ATTIC VENTILATION CALCULATIONS

1. 17,063 SF ÷ 150 = 113.75 SF of ventilation required
2. Soffit 664.3 SF x 9.65 SI of ventilation/SF = 6,410 SI ÷ 144 = 45SF
3. Ridge 114 LF x 18 SI/LF = 1,422 SI ÷ 144 = 9.9SF
4. Gable Vents(4) 18"x 24" = 12 SF

Actual Ventilation Area 106.5 SF

10 ATTICS FAN REQUIRED

A4

HARRIS A. SANDERS, ARCHITECTS, P.C.
252 WASHINGTON AVENUE, ALBANY, NEW YORK 12210

L'Dor Assisted living
West Clarkstown Road, New City, New York

ROOF PLAN

Drawn by	AA
Checked by	DS
Scale	1/8" = 1'-0"
Date	Project Status
Revision Date	

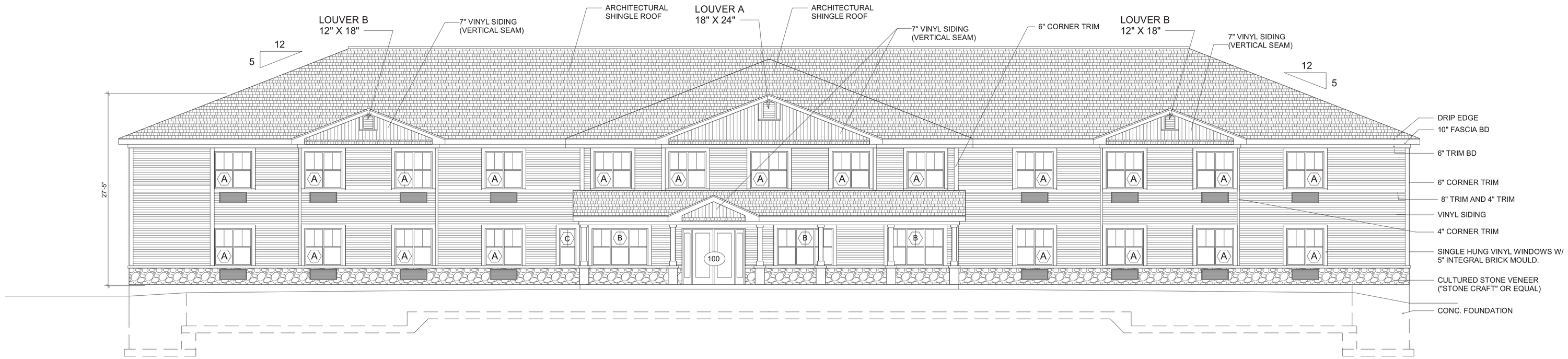

1 / A5 EAST ELEVATION
SCALE:1/8"=1'-0"

P-TAC GRILLS TO MATCH SIDING AND COULTURED STONE FINISH COLOR

ALL LOUVERS TO HAVE WIRE MESH SCREEN

LOUVERS TO BE RECTANGULAR WITH PVC TRIANGULAR TRIM TO MATCH ROOF PITCH

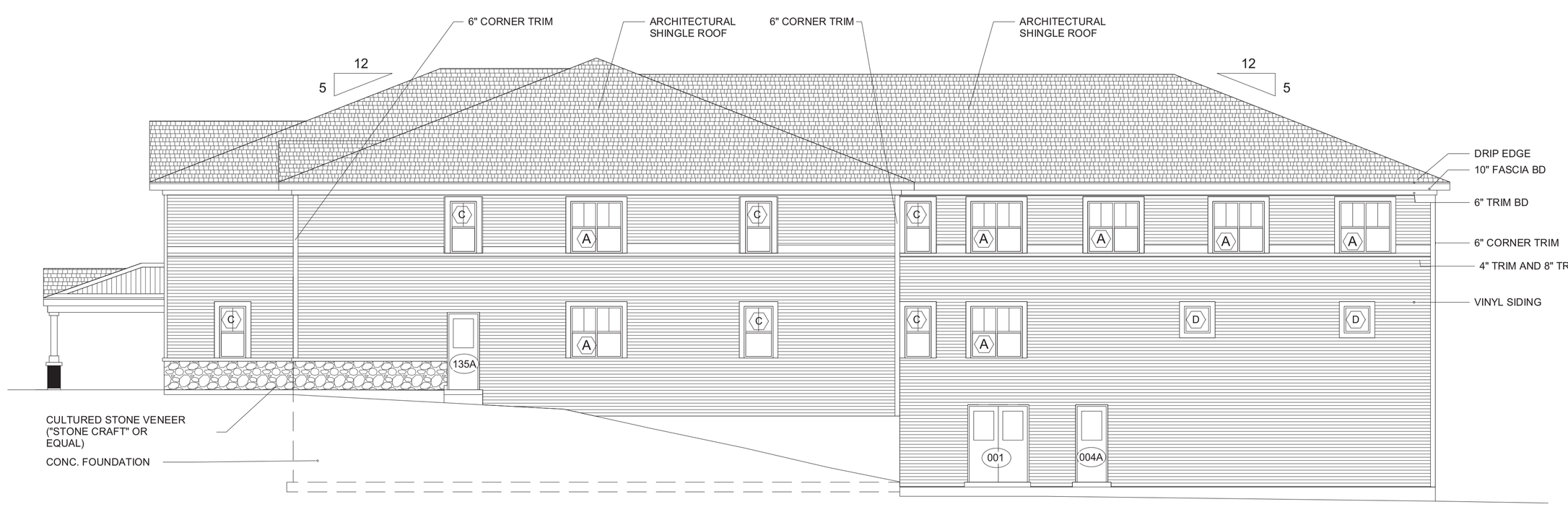

2 / A5 NORTH ELEVATION
SCALE:1/8"=1'-0"

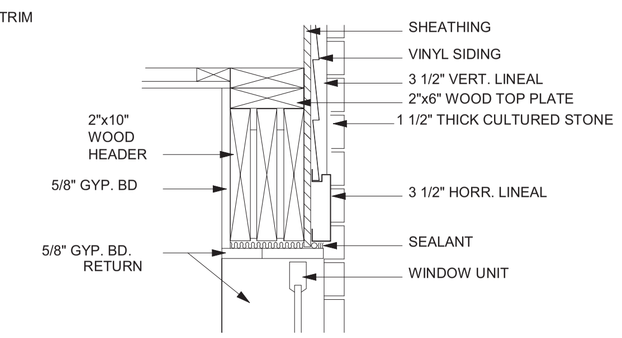

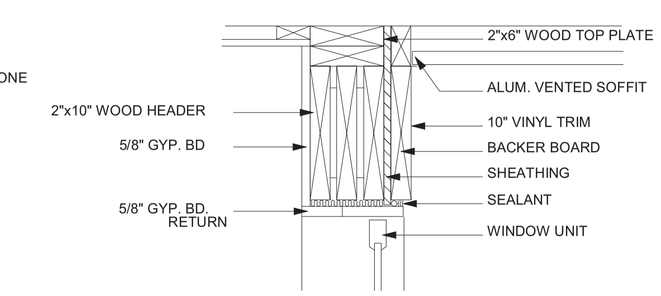

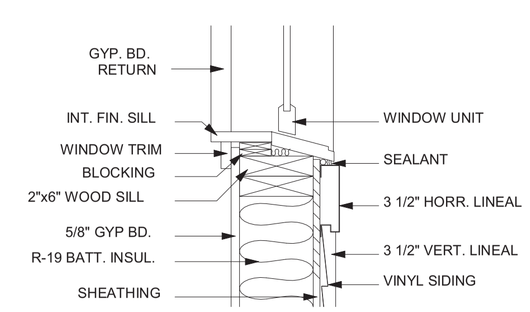

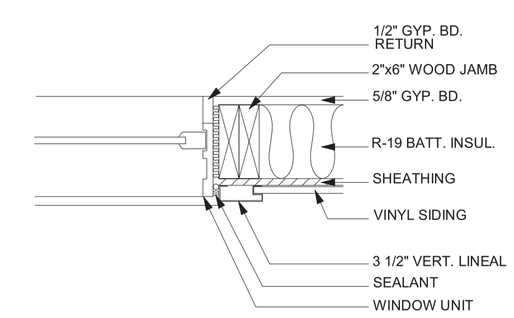

WINDOW SCHEDULE

MK	SIZE WIDTH	SIZE HEIGHT	TYPE	MAT	GLASS	MANUFACTURER	GLASS AREA	VENT AREA	REMARKS
A	5'-4"	5'-4"	TWIN SINGLE HUNG	VINYL	ARGON LOW-E IG	PLY GEM	23.20	11.60	5" BRICKMOULD W/SILL NOSE, CONTOURED GRID SCREEN, WHITE, J-CHANNEL
B	8'-0"	5'-4"	TRIPLE SINGLE HUNG	VINYL	ARGON LOW-E IG	PLY GEM	34.8	17.4	5" BRICKMOULD W/SILL NOSE, CONTOURED GRID, SCREEN, WHITE J-CHANNEL
C	2'-8"	5'-4"	SINGLE HUNG	VINYL	ARGON LOW-E IG	PLY GEM	14.50	7.25	5" BRICKMOULD W/SILL NOSE, CONTOURED GRID, SCREEN, WHITE J-CHANNEL
D	2'-8"	2'-8"	SINGLE FIXED	VINYL	ARGON LOW-E IG	PLY GEM	14.50	7.25	5" BRICKMOULD W/SILL NOSE, CONTOURED GRID, SCREEN, WHITE J-CHANNEL

PERMIT SET
05-12-2021

Drawn by	AA
Checked by	DS
Scale	As indicated
Date	Project Status
Revision Date	

ELEVATIONS

HARRIS A. SANDERS, ARCHITECTS, P.C.
232 WASHINGTON AVENUE, ALBANY, NEW YORK 12210

L'Dor Assisted living
West Clarkstown Road, New City, New York

REGISTERED ARCHITECT
DANIEL PAUL SANDERS
024004
STATE OF NEW YORK

A5

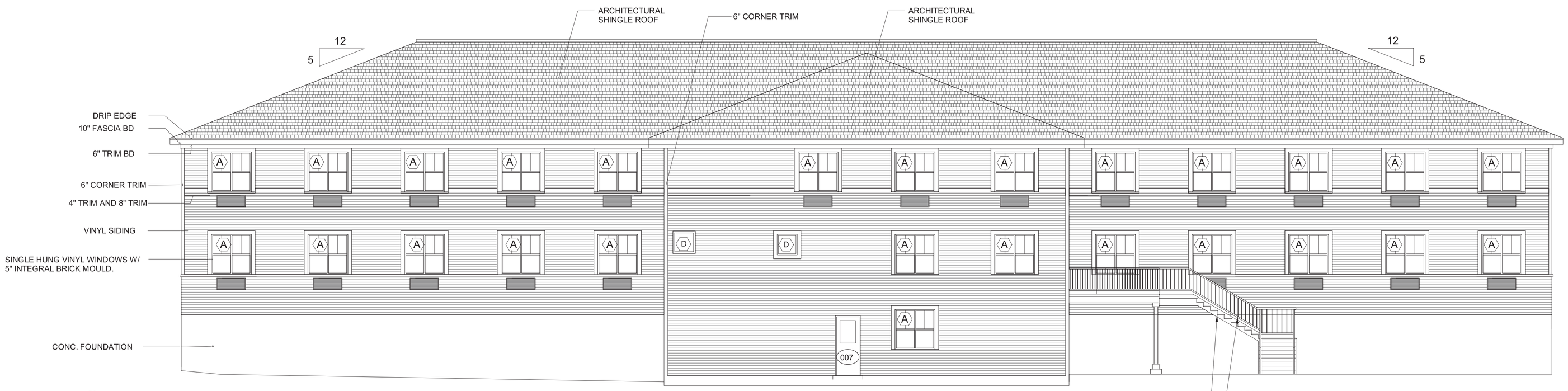

1 / A6 WEST ELEVATION
SCALE:1/8"=1'-0"

P-TAC GRILLS TO MATCH SIDING AND COULTURED STONE FINISH COLOR

ALL LOUVERS TO HAVE WIRE MESH SCREEN

LOUVERS TO BE RECTANGULAR WITH PVC TRIANGULAR TRIM TO MATCH ROOF PITCH

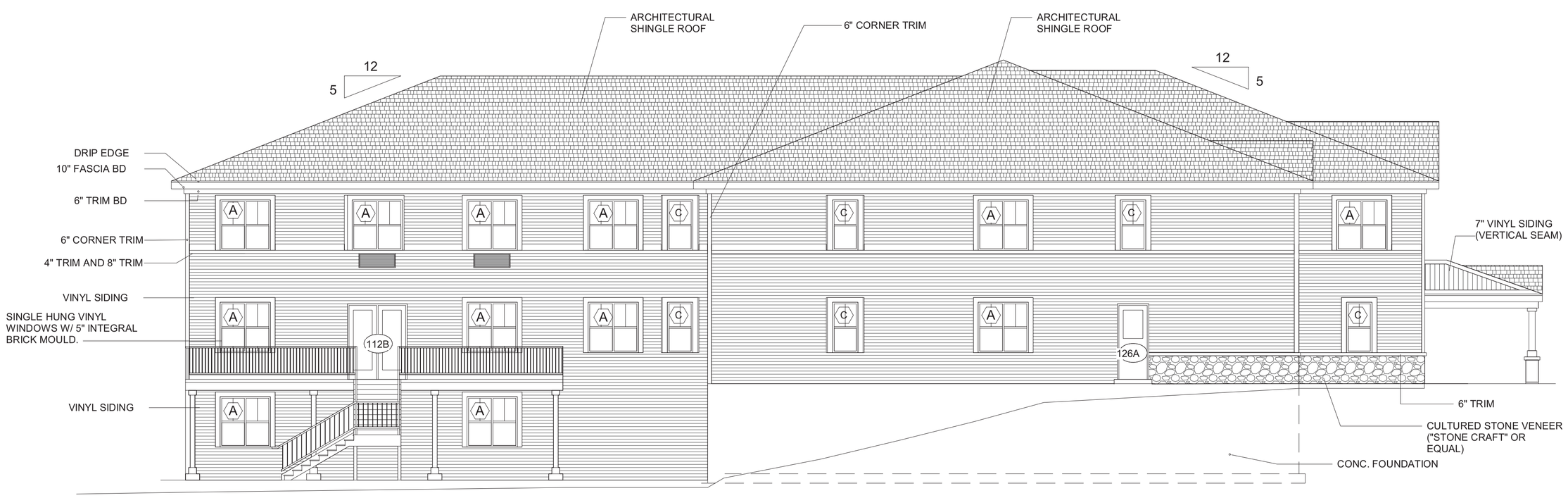

2 / A6 SOUTH ELEVATION
SCALE:1/8"=1'-0"

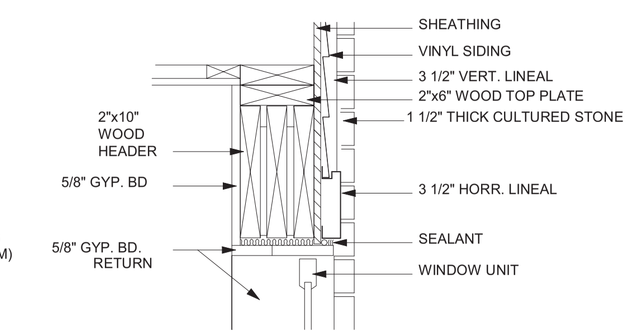

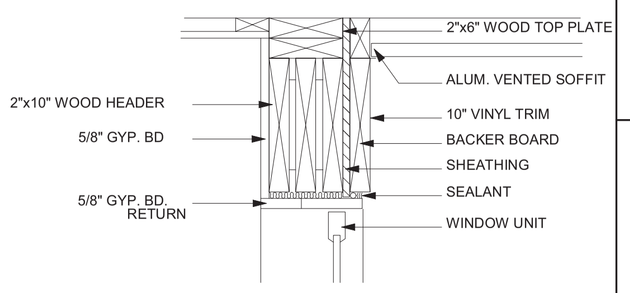

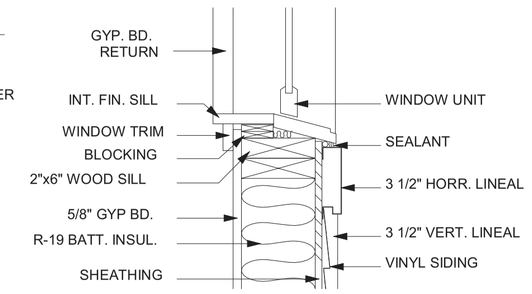

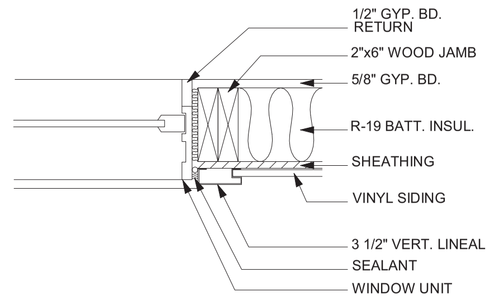

WINDOW SCHEDULE

MK	SIZE WIDTH	SIZE HEIGHT	TYPE	MAT	GLASS	MANUFACTURER	GLASS AREA	VENT AREA	REMARKS
A	5'-4"	5'-4"	TWIN SINGLE HUNG	VINYL	ARGON LOW-E IG	PLY GEM	23.20	11.60	5" BRICKMOULD W/SILL NOSE, CONTOURED GRID SCREEN, WHITE, J-CHANNEL
B	8'-0"	5'-4"	TRIPLE SINGLE HUNG	VINYL	ARGON LOW-E IG	PLY GEM	34.8	17.4	5" BRICKMOULD W/SILL NOSE, CONTOURED GRID, SCREEN, WHITE J-CHANNEL
C	2'-8"	5'-4"	SINGLE HUNG	VINYL	ARGON LOW-E IG	PLY GEM	14.50	7.25	5" BRICKMOULD W/SILL NOSE, CONTOURED GRID, SCREEN, WHITE J-CHANNEL
D	2'-8"	2'-8"	SINGLE FIXED	VINYL	ARGON LOW-E IG	PLY GEM	14.50	7.25	5" BRICKMOULD W/SILL NOSE, CONTOURED GRID, SCREEN, WHITE J-CHANNEL

PERMIT SET
05-12-2021

Drawn by	AA
Checked by	DS
Scale	As indicated
Date	Project Status
Revision Date	

ELEVATIONS

HARRIS A. SANDERS, ARCHITECTS, P.C.
252 WASHINGTON AVENUE, ALBANY, NEW YORK 12210

L'Dor Assisted living
West Clarkstown Road, New City, New York

REGISTERED ARCHITECT DANIEL PAUL SANDERS 024004 STATE OF NEW YORK

A6

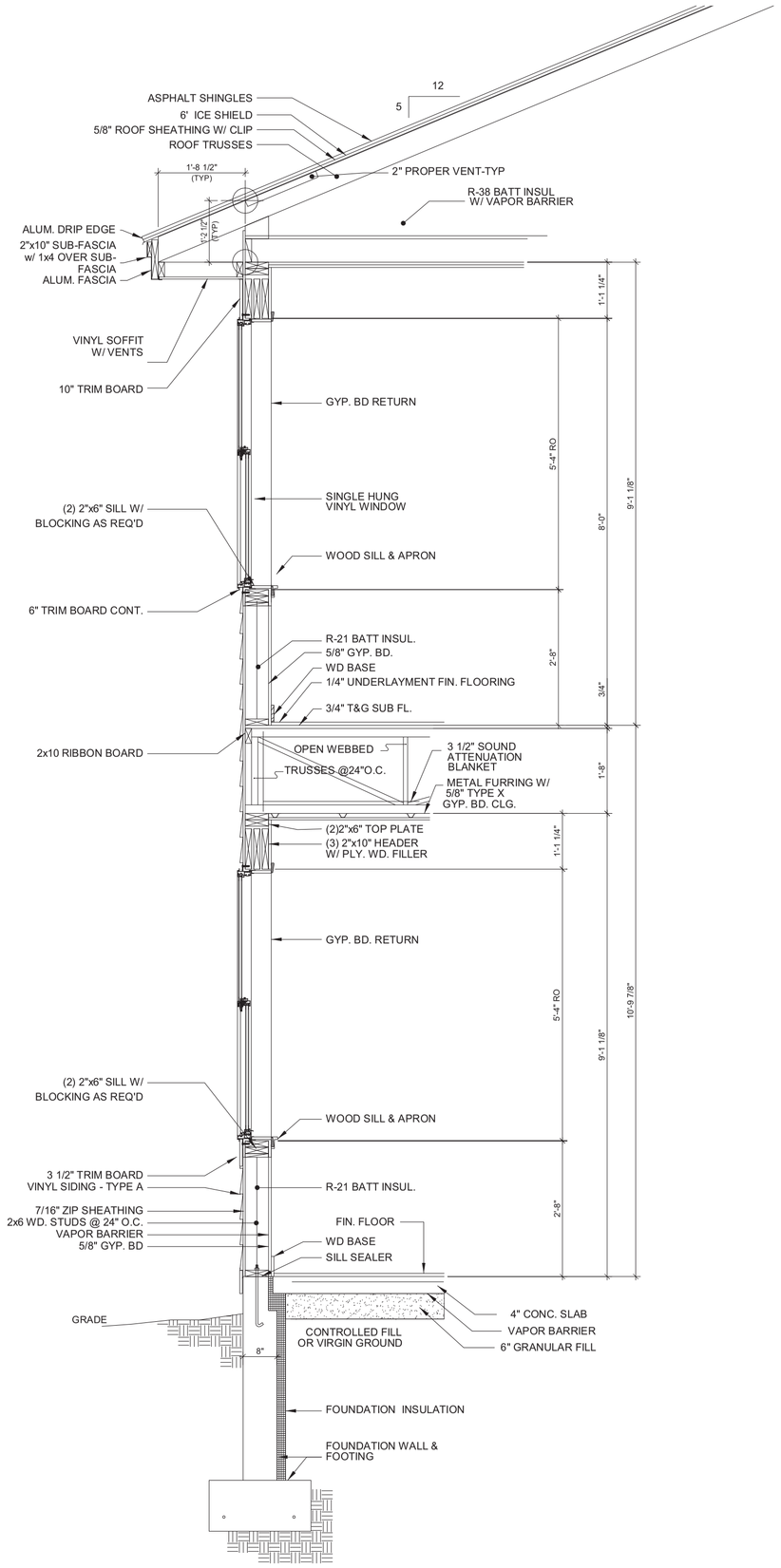

A / A7 WALL SECTION
SCALE:1/2"=1'-0"

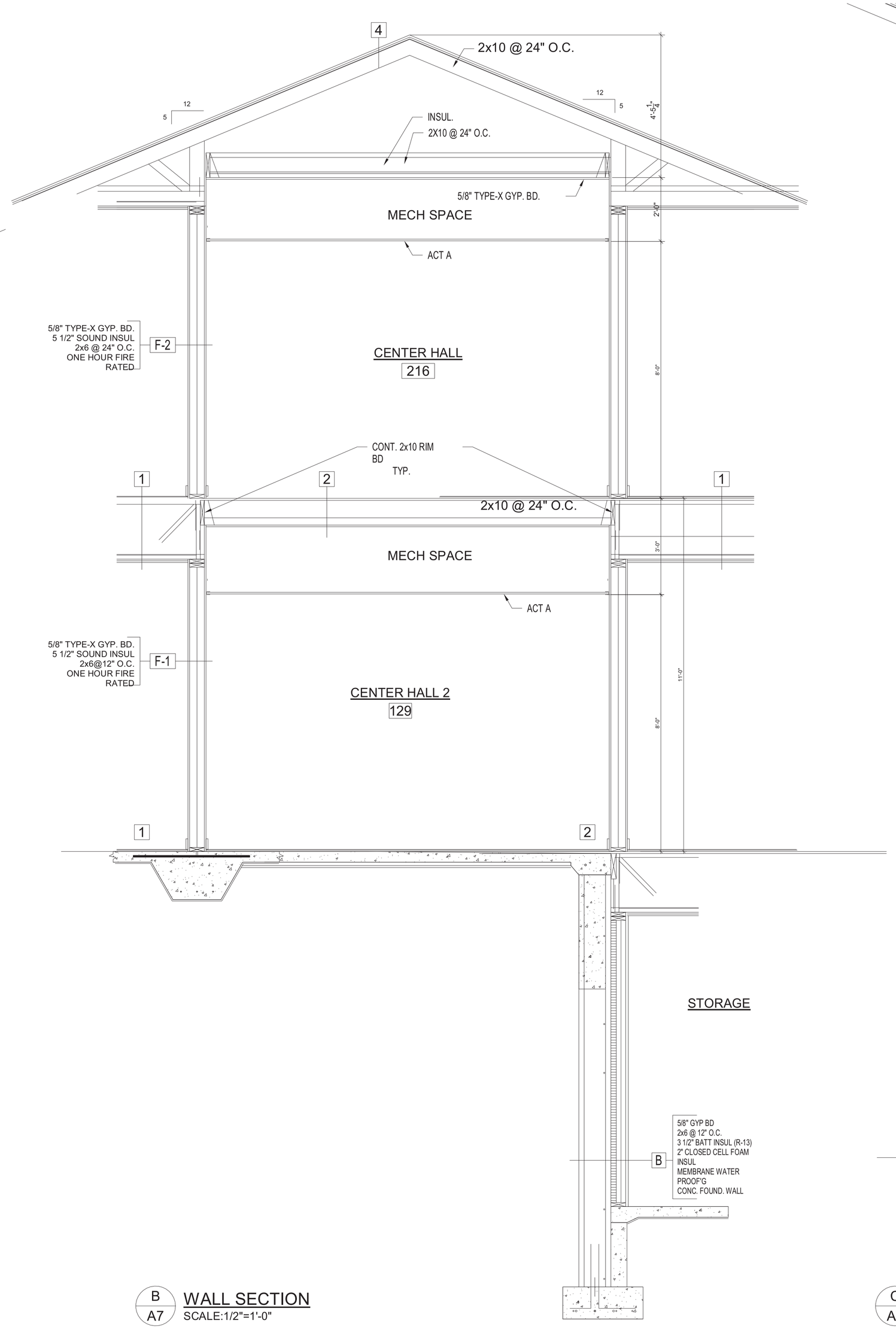

B / A7 WALL SECTION
SCALE:1/2"=1'-0"

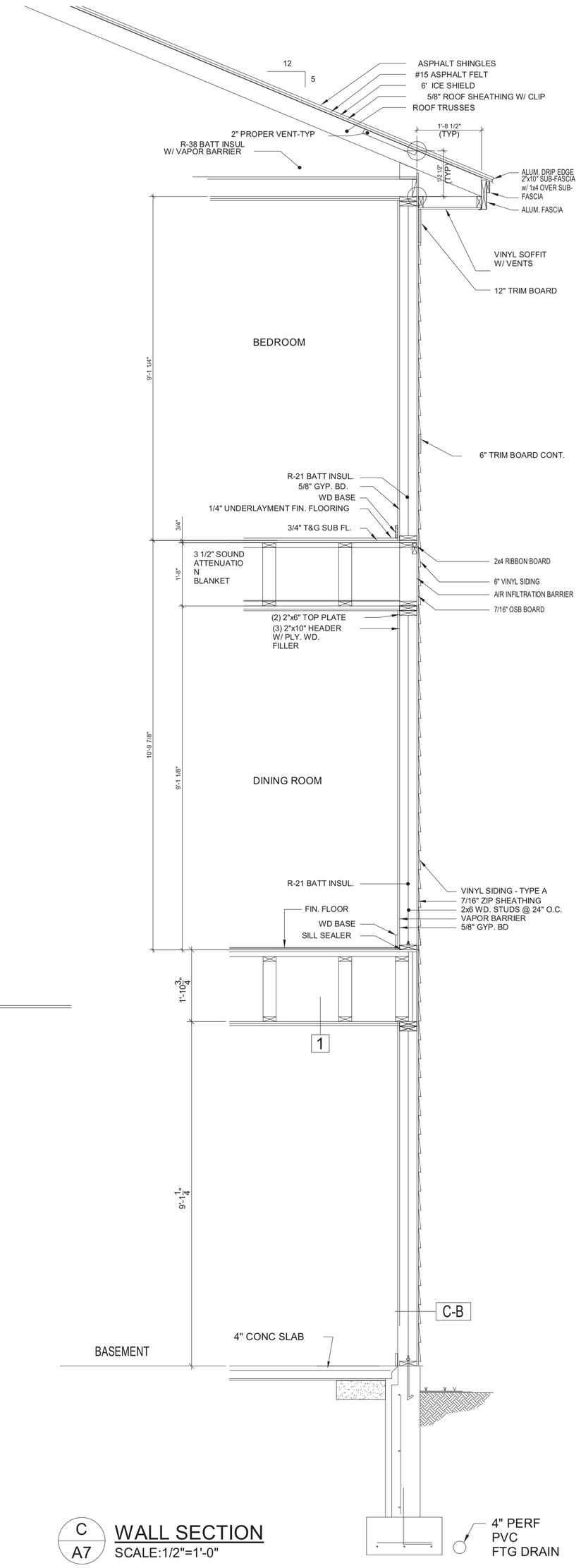

C / A7 WALL SECTION
SCALE:1/2"=1'-0"

PERMIT SET
05-12-2021

Drawn by	AA
Checked by	DS
Scale	1/2" = 1'-0"
Date	Project Status
Revision Date	

WALL SECTIONS

HARRIS A. SANDERS, ARCHITECTS, P.C.
252 WASHINGTON AVENUE, ALBANY, NEW YORK 12210

L'Dor Assisted living
West Clarkstown Road, New City, New York

REGISTERED ARCHITECT DANIEL PAUL SANDERS 024004 STATE OF NEW YORK

A7

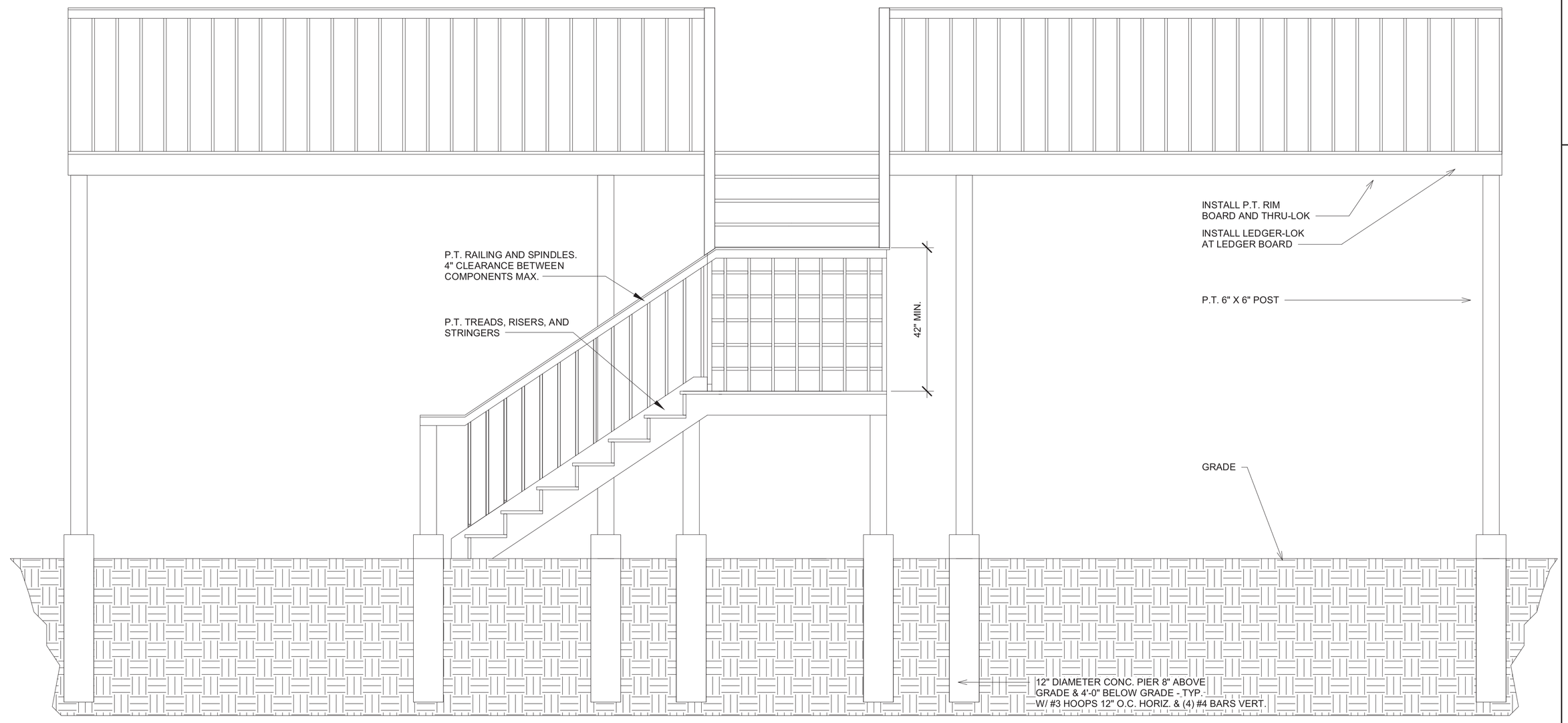

B / A8 BALCONY STAIRS FRAMING DETAIL
SCALE:1/4"=1'-0"

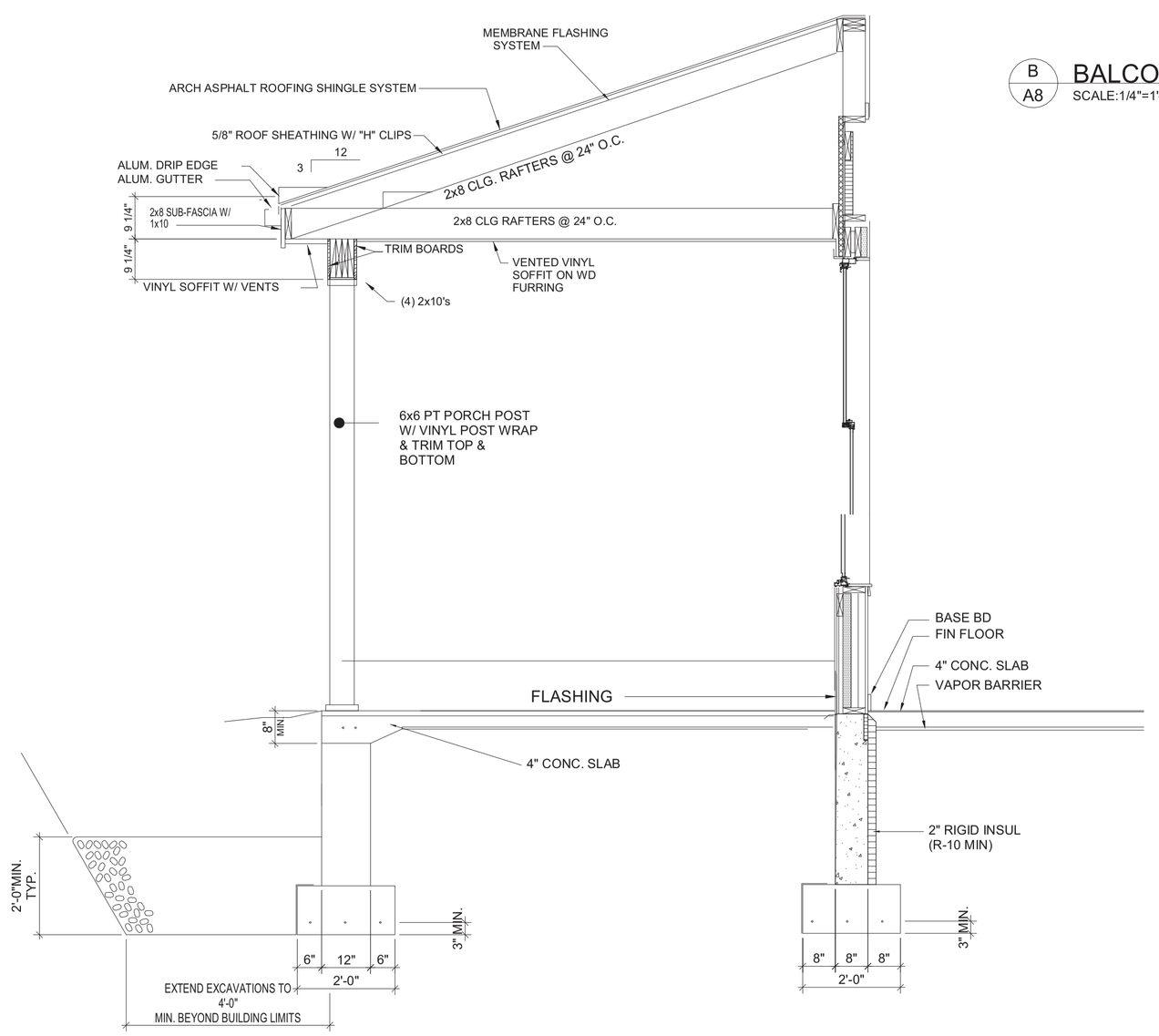

A / A8 FRONT PORCH SECTION
SCALE:1/4"=1'-0"

PERMIT SET
05-12-2021

Drawn by	AA
Checked by	DS
Scale	1/2" = 1'-0"
Date	Project Status
Revision Date	

STAIR FRAMING

HARRIS A. SANDERS, ARCHITECTS, P.C.
232 WASHINGTON AVENUE, ALBANY, NEW YORK 12210

L'Dor Assisted living
West Clarkstown Road, New City, New York

REGISTERED ARCHITECT DANIEL PAUL SANDERS 024004 STATE OF NEW YORK

A8

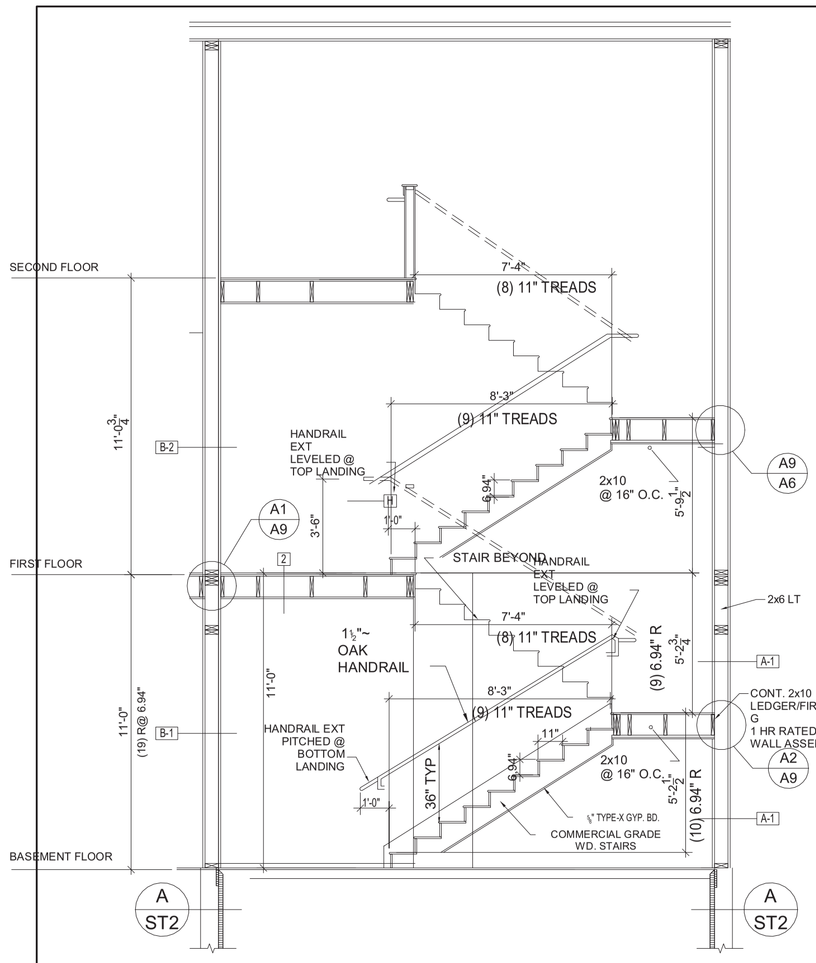

A/A9 SECTION STAIR 1 & 3 (MIRRORED)
SCALE:1/4"=1'-0"

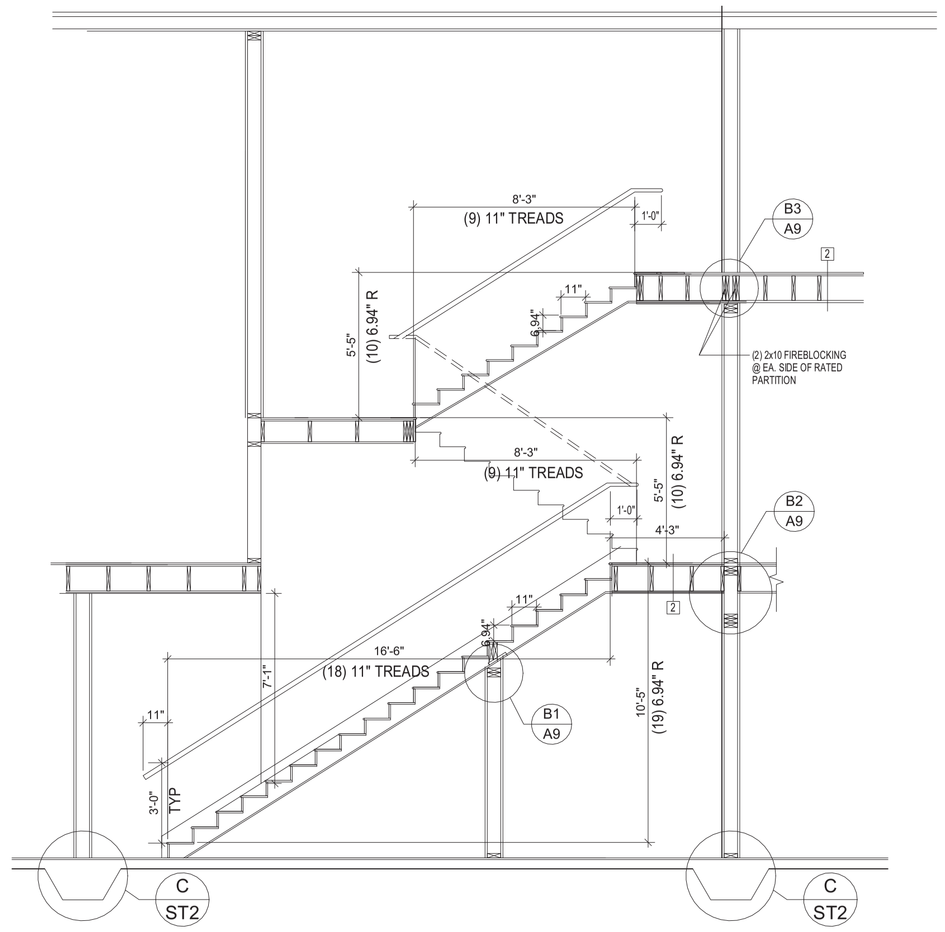

B/A9 SECTION STAIR 2
SCALE:1/4"=1'-0"

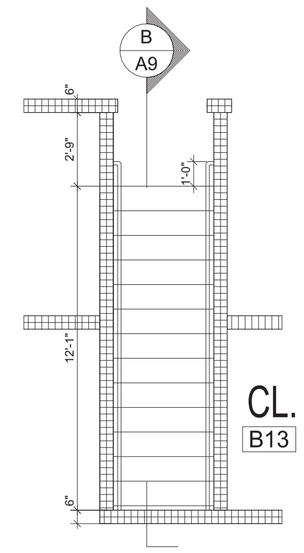

BASEMENT FLOOR

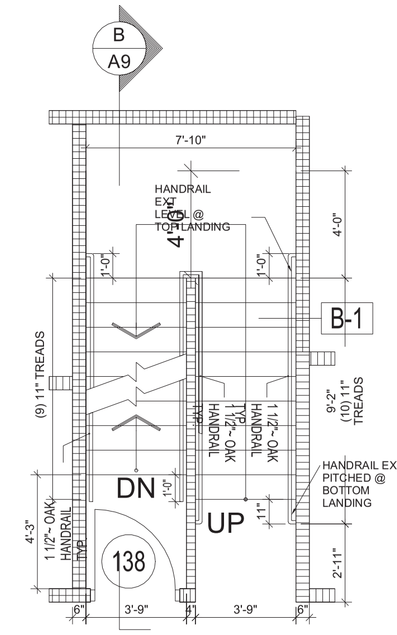

FIRST FLOOR

2/A9 STAIR 2 PLANS
SCALE:1/4"=1'-0"

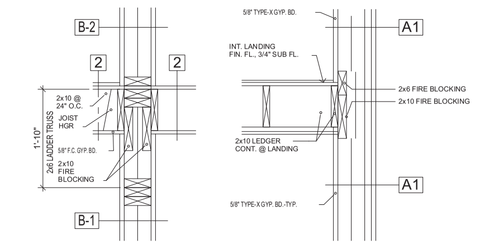

A1/A9 SECTION
SCALE:1/2"=1'-0"

A2/A9 SECTION
SCALE:1/2"=1'-0"

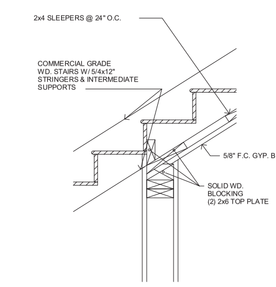

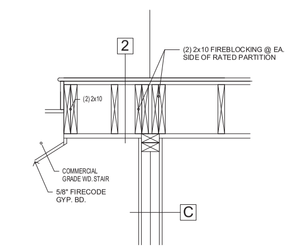

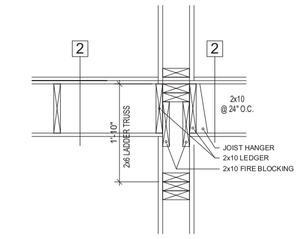

B1/A9 SECTION
SCALE:1/2"=1'-0"

B2/A9 SECTION
SCALE:1/2"=1'-0"

B3/A9 SECTION
SCALE:1/2"=1'-0"

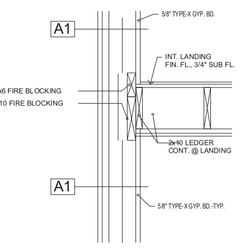

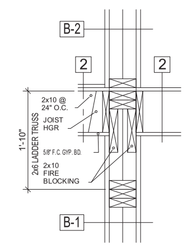

C1/A9 SECTION
SCALE:1/2"=1'-0"

C2/A9 SECTION
SCALE:1/2"=1'-0"

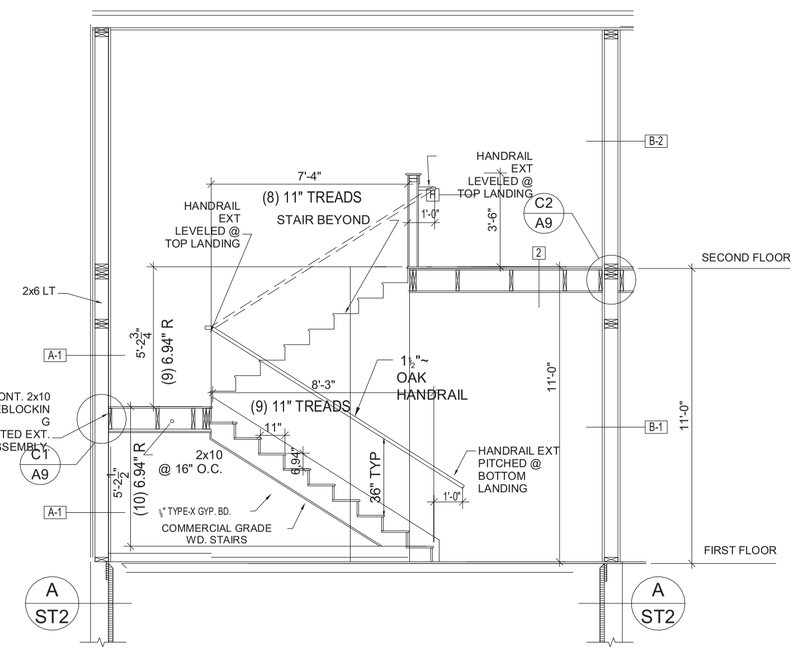

C/A9 SECTION STAIR 4 & 5 (MIRRORED)
SCALE:1/4"=1'-0"

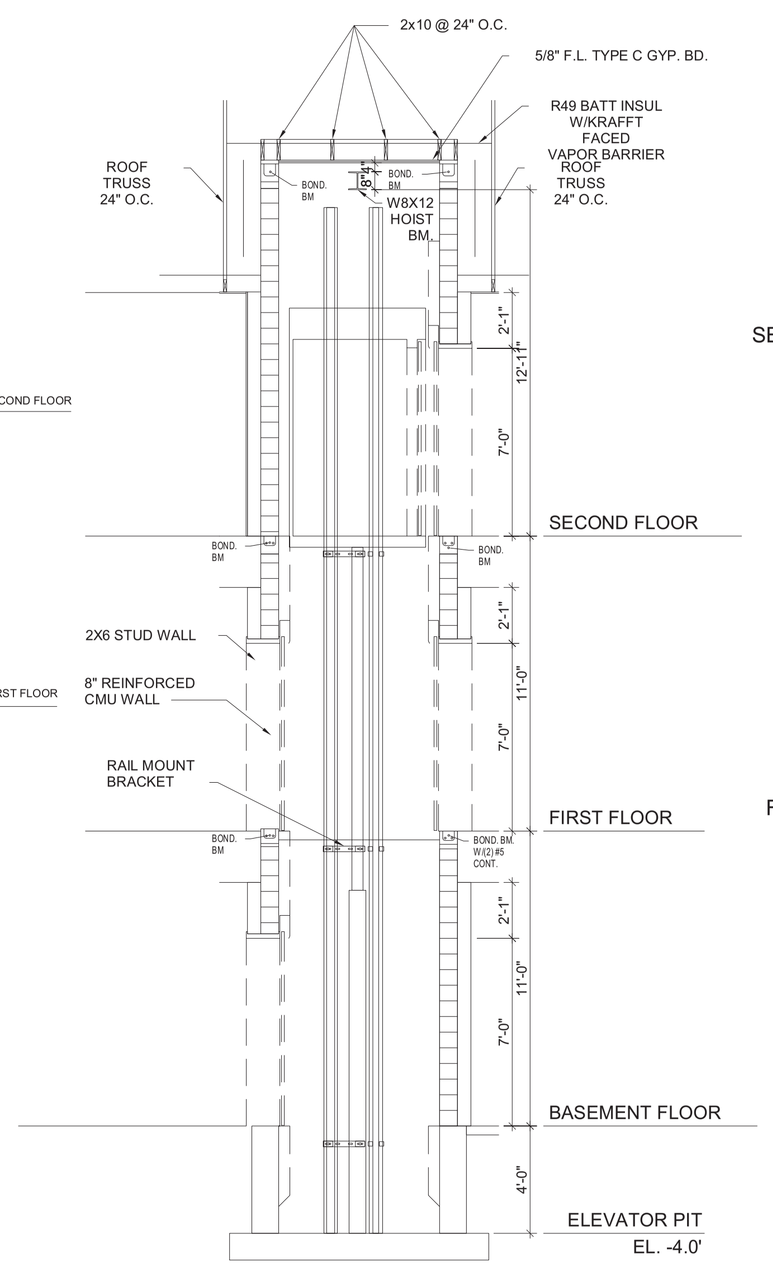

D/A9 ELEVATOR SECTION
SCALE:1/4"=1'-0"

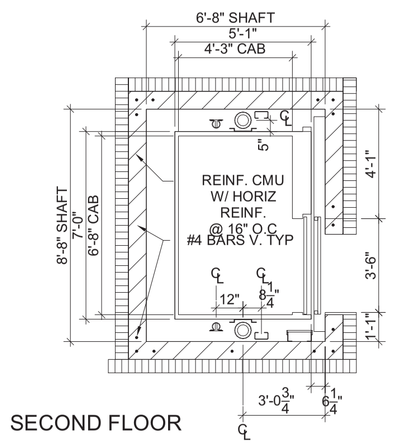

SECOND FLOOR

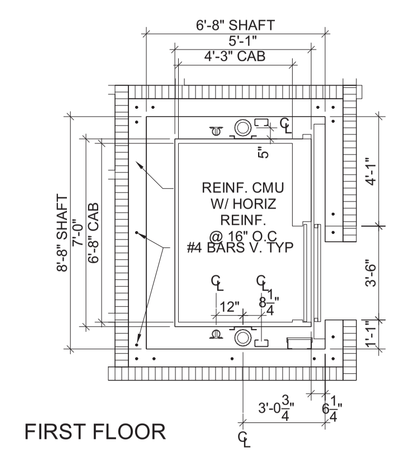

FIRST FLOOR

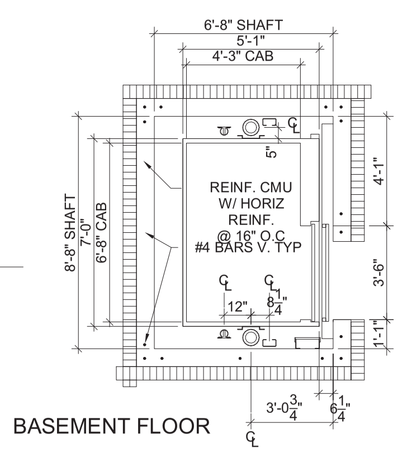

BASEMENT FLOOR

1/A9 ELEVATOR PLANS
SCALE:1/4"=1'-0"

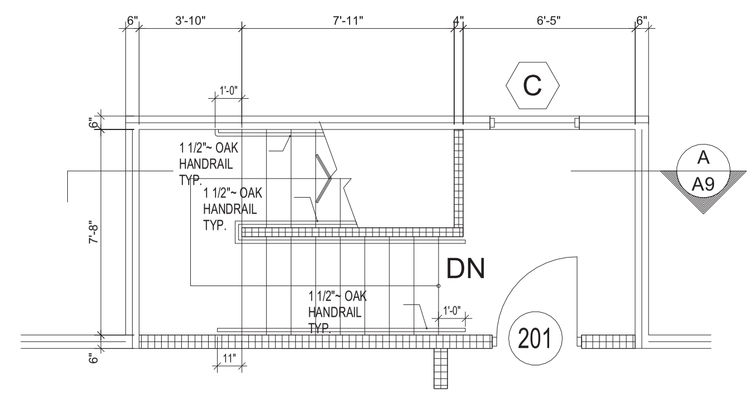

SECOND FLOOR

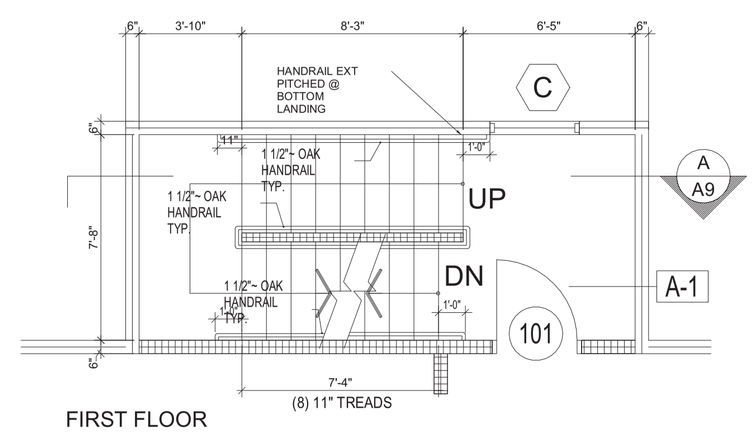

FIRST FLOOR

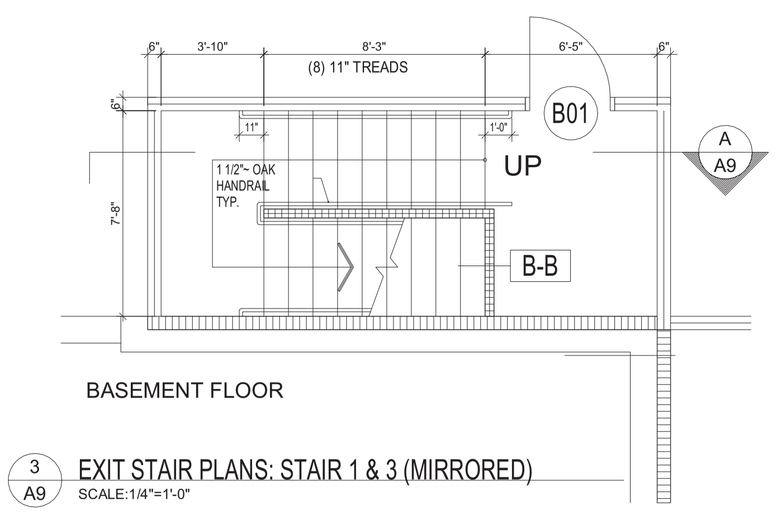

BASEMENT FLOOR

3/A9 EXIT STAIR PLANS: STAIR 1 & 3 (MIRRORED)
SCALE:1/4"=1'-0"

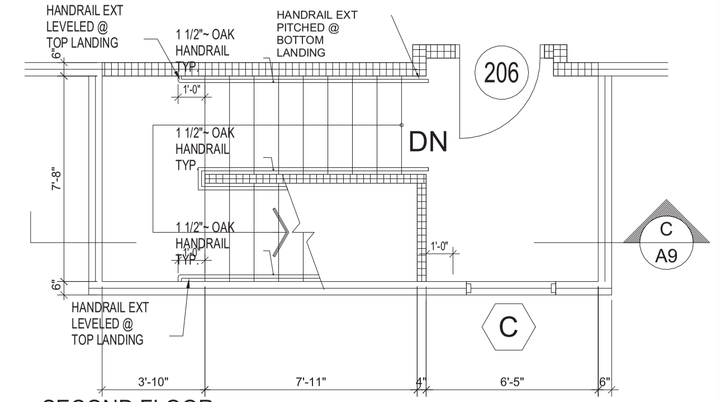

SECOND FLOOR

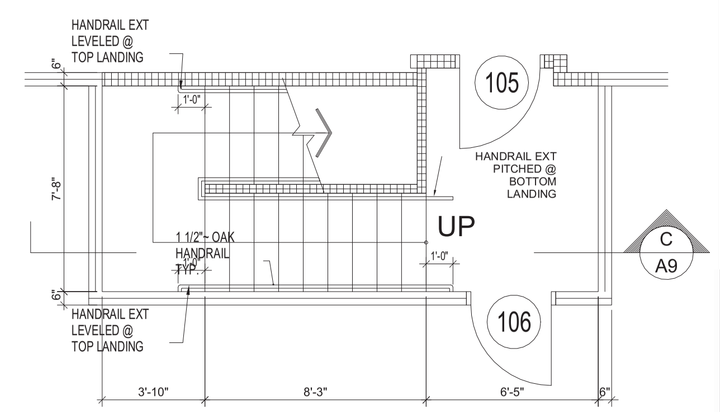

FIRST FLOOR

4/A9 EXIT STAIR PLANS: STAIR 4 & 5 (MIRRORED)
SCALE:1/4"=1'-0"

PERMIT SET
05-12-2021

Drawn by	AA
Checked by	DS
Scale	As indicated
Date	Project Status
Revision Date	

STAIR DETAILS

HARRIS A. SANDERS, ARCHITECTS, P.C.
252 WASHINGTON AVENUE, ALBANY, NEW YORK 12210

L'Dor Assisted living
West Clarkstown Road, New City, New York

A9

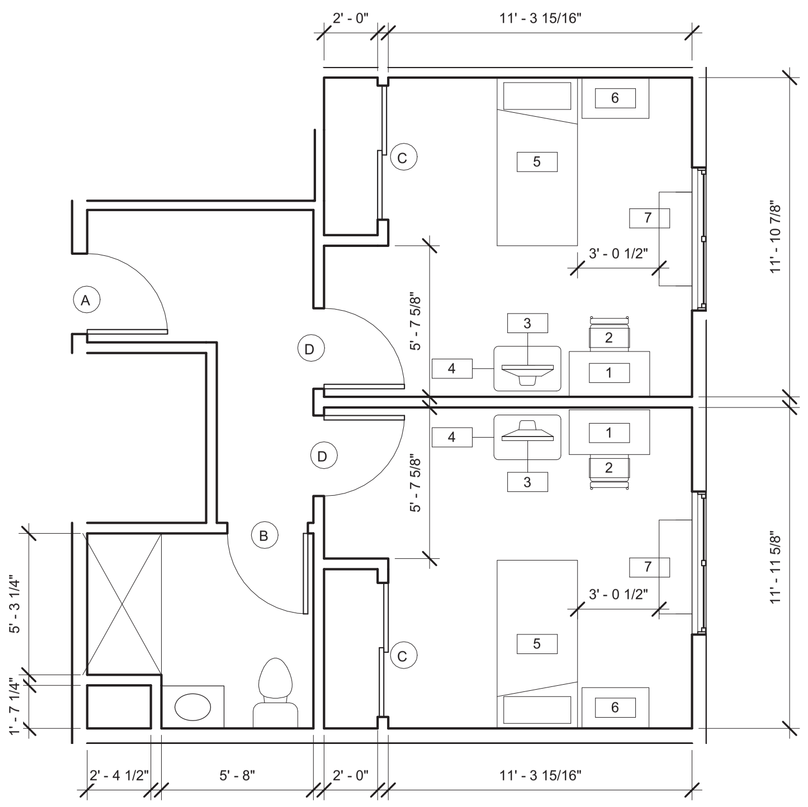

5 FS-C APARTMENT LAYOUT
1/4" = 1'-0"

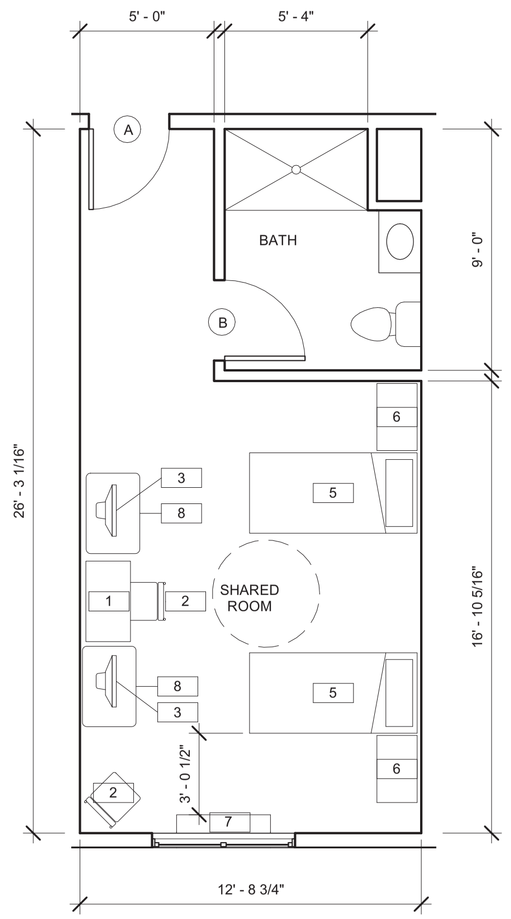

3 TYPICAL SHARED ROOM LAYOUT
1/4" = 1'-0"

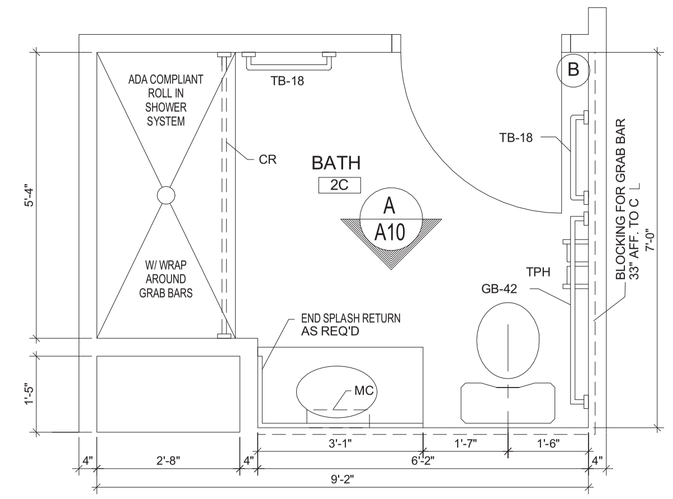

7 A10 TYPICAL BATHROOM FLOOR PLAN
SCALE:1/2"=1'-0"

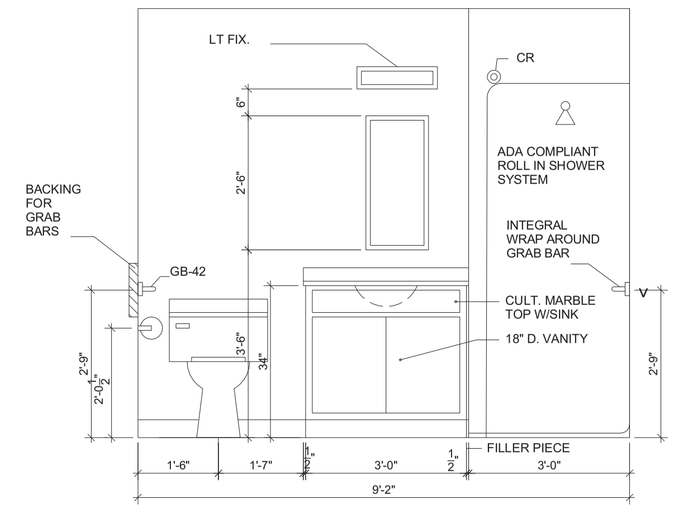

A A10 BATHROOM ELEVATION
SCALE:1/2"=1'-0"

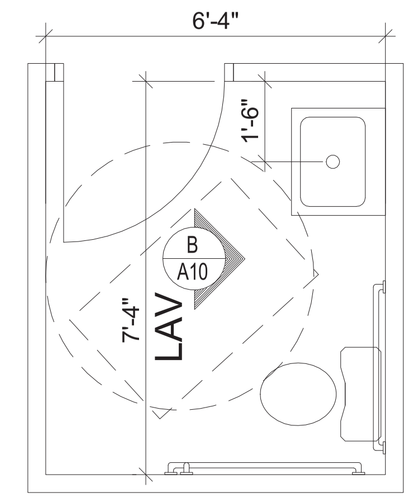

8 A10 TYPICAL LAVATORY FLOOR PLAN
SCALE:1/2"=1'-0"

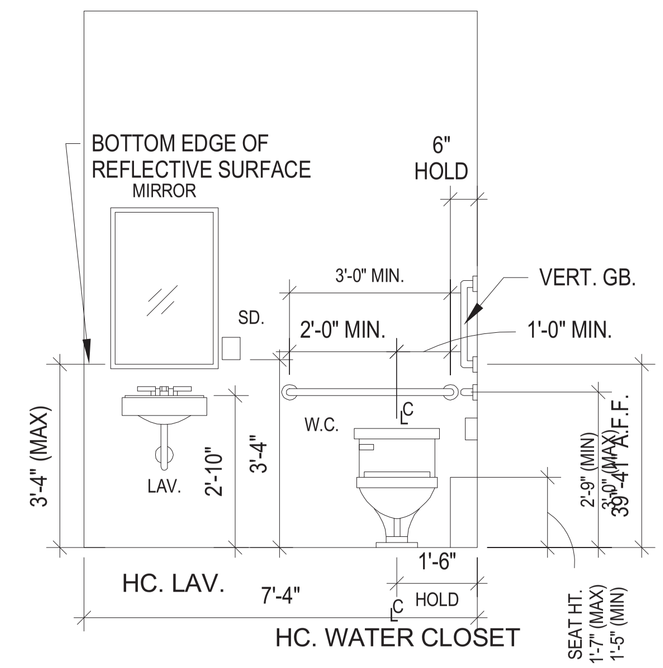

B A10 TYPICAL LAVATORY ELEVATION
SCALE:1/2"=1'-0"

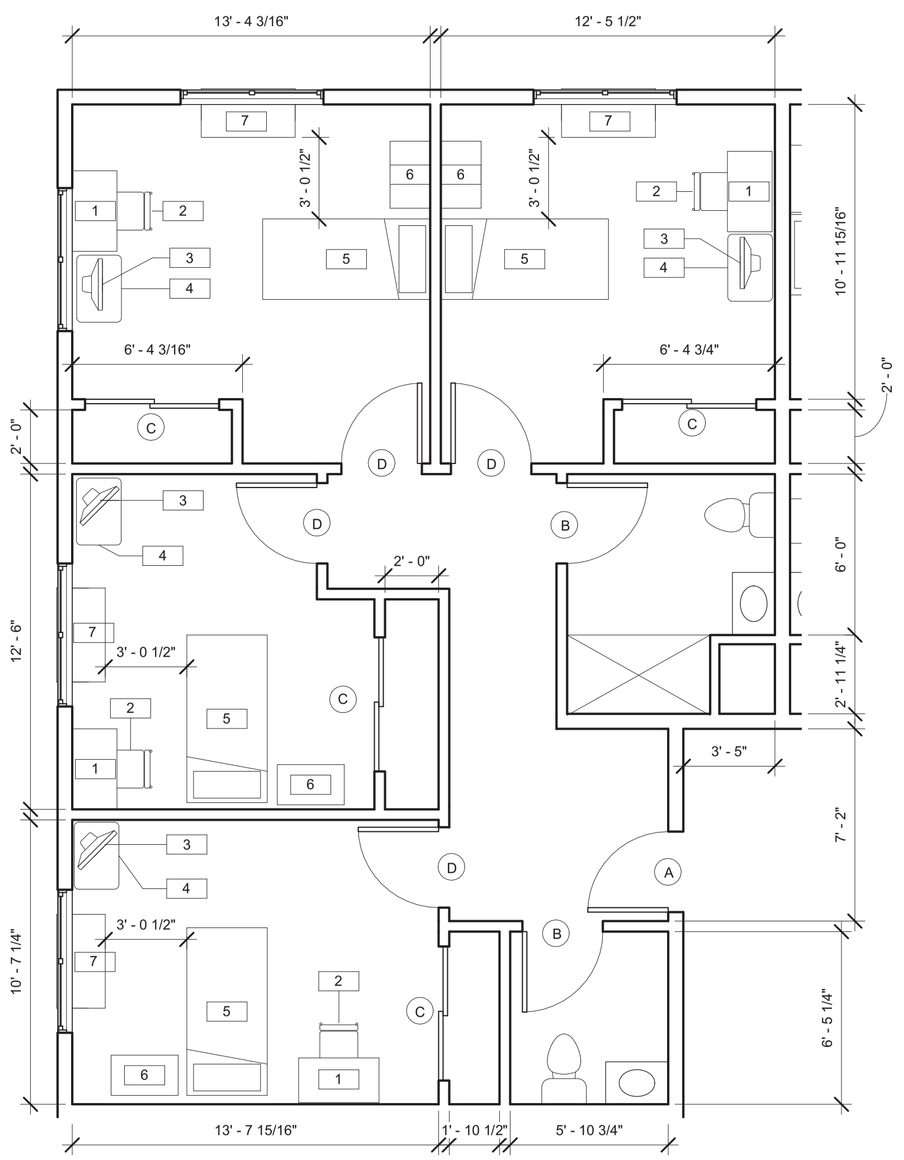

1 FS-A APARTMENT LAYOUT
1/4" = 1'-0"

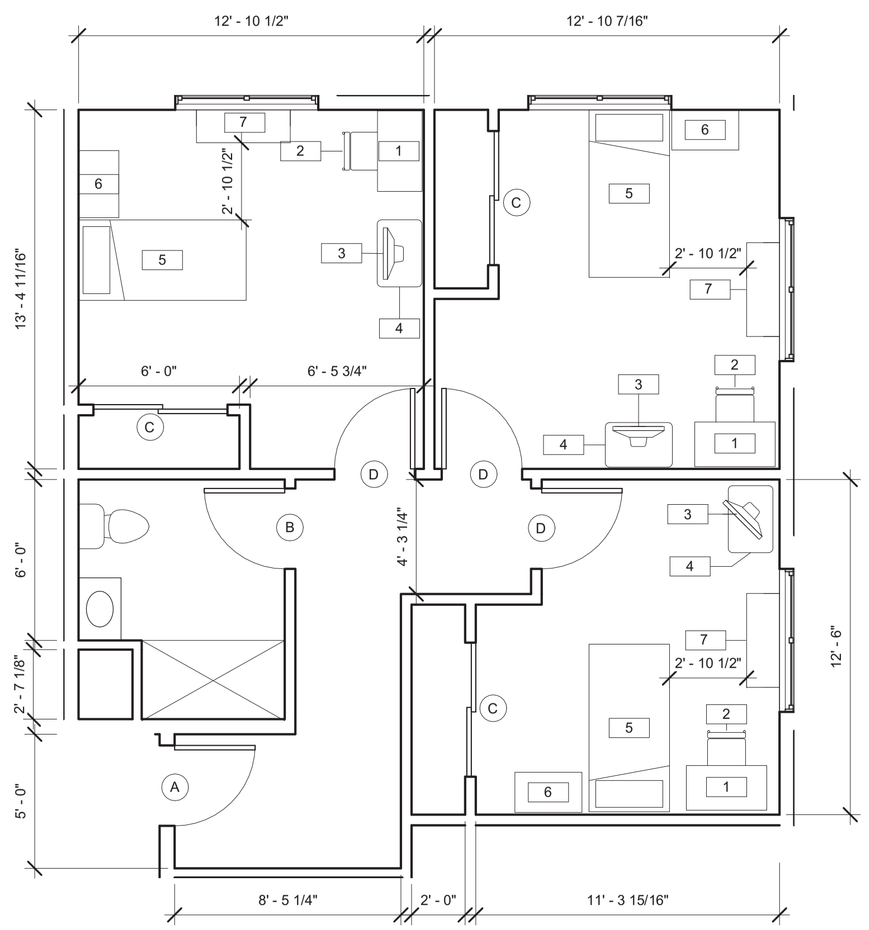

4 FS-B APARTMENT LAYOUT
1/4" = 1'-0"

APARTMENT FURNITURE

MARK	NAME	TOTAL COUNT
1	DESK (20" X 36")	81
2	CHAIR	79
3	TV	79
4	DRESSER (30" X 20")	9
5	BED (75" X 36")	79
6	NIGHT STAND (20" X 30")	79
7	P-TAC UNIT	44
8	DRESSER (30" X 24")	70

PERMIT SET
05-12-2021

Drawn by	AA
Checked by	DS
Scale	As indicated
Date	Project Status
Revision Date	

TYPICAL UNIT PLANS & TYPICAL BATHROOM DETAILS

HARRIS A. SANDERS, ARCHITECTS, P.C.
252 WASHINGTON AVENUE, ALBANY, NEW YORK 12210

L'Dor Assisted living
West Clarkstown Road, New City, New York

REGISTERED ARCHITECT DANIEL PAUL SANDERS 024004 STATE OF NEW YORK

A10

MK	DOOR							FRAME		LABEL	GLASS		MK	HARDWARE		REMARKS
	QTY	WIDTH	HGT	THK	TYPE	MAT	CORE	TYPE	MAT		TYPE	THK		SET	LABEL	
A	1	3' - 0"	6' - 8"	0' - 1 3/4"	D1	HM	FR	-	-	45 MIN	-	-	A	1	45 MIN	SMOKE SEAL GASKET
B	1	3' - 0"	6' - 8"	0' - 1 3/8"	D2	WD	SC	-	-	-	-	-	B	2	-	PRIVACY LOCKSET
C	2	2' - 6"	6' - 8"	0' - 1 3/8"	D3	WD	HC	-	-	-	-	-	C	3	-	SLIDING CLOSET DOOR
D	1	3' - 0"	6' - 8"	0' - 1 3/8"	D2	WD	SC	-	-	-	-	-	D	4	-	PRIVACY LOCKSET

DOOR SCHEDULE

MK	DOOR							FRAME		LABEL	GLASS		HARDWARE	
	QTY	WIDTH	HGT	THK	TYPE	MAT	CORE	TYPE	MAT		TYPE	THK	SET	LABEL
001	2	6' - 0"	6' - 8"	0' - 1 3/8"	D6	HM	INS	E	HM	45MIN	-	-	8	45 MIN
002	1	3' - 0"	6' - 8"	0' - 1 3/8"	D11	HM	FR	A1	HM	45MIN	-	-	5	45 MIN
003	1	3' - 0"	6' - 8"	0' - 1 3/8"	D9	HM	FR	A1	HM	45MIN	-	-	6	45 MIN
003A	1	2' - 6"	6' - 8"	0' - 1 3/8"	D9	HM	FR	A1	HM	45MIN	-	-	6	-
004	1	3' - 0"	6' - 8"	0' - 1 3/8"	D9	HM	FR	A1	HM	45MIN	-	-	6	45 MIN
004A	1	3' - 4"	7' - 0"	0' - 1 3/8"	D4	HM	INS	E	HM	45MIN	-	-	14	45 MIN
005	2	6' - 0"	6' - 8"	0' - 1 3/8"	D6	HM	FR	A1	HM	45MIN	-	-	7	45 MIN
006	1	3' - 0"	6' - 8"	0' - 1 3/8"	D9	HM	FR	A1	HM	45MIN	-	-	6	45 MIN
007	1	3' - 0"	6' - 8"	0' - 1 3/8"	D1	HM	INS	E	HM	45MIN	-	-	14	45 MIN
008	1	3' - 0"	6' - 8"	0' - 1 3/8"	D2	HM	FR		HM	45MIN	-	-	6	45 MIN
009	1	3' - 0"	6' - 8"	0' - 1 3/8"	D1	HM	FR	A1	HM	45MIN	-	-	9	45 MIN
009A	1	3' - 0"	6' - 8"	0' - 1 3/8"	D1	HM	SC	A1	HM	45MIN	-	-	13	45 MIN
010	1	3' - 0"	6' - 8"	0' - 1 3/8"	D2	HM	FR	A1	HM	45MIN	-	-	6	45 MIN
011	1	3' - 0"	6' - 8"	0' - 1 3/8"	D2	HM	FR	A1	HM	45MIN	-	-	6	45 MIN
100	2	6' - 0"	6' - 8"	0' - 1 3/8"	AL-1	HM	INS	AL-1	AL	45MIN	TEMP/INS	1"	20	-
101	2	6' - 0"	6' - 8"	0' - 1 3/8"	AL-1	HM	INS	AL-1	AL	45MIN	TEMP/INS	1/4"	21	
102	1	3' - 0"	6' - 8"	0' - 1 3/8"	D9	HM	SC	D	HM	45MIN	-	-	13	45 MIN
103	1	3' - 0"	6' - 8"	0' - 1 3/8"	D7	HM	SC	D	HM	45MIN	TEMP/INS			
104	1	3' - 0"	6' - 8"	0' - 1 3/8"	D7	HM	FR	A1	HM	45MIN	45MIN	1/4"	9	45 MIN
104A	1	3' - 0"	6' - 8"	0' - 1 3/8"	D9	HM	SC	D	HM	-	-	-	10	45 MIN
104B	1	3' - 0"	6' - 8"	0' - 1 3/8"	D9	HM	SC	D	HM	-	-	-	10	45 MIN
104C	1	3' - 0"	6' - 8"	0' - 1 3/8"	D9	HM	SC	D	HM	-	-	-	10	45 MIN
104D	1	3' - 0"	6' - 8"	0' - 1 3/8"	D9	HM	SC	D	HM	-	-	-	10	45 MIN
104E	1	3' - 0"	6' - 8"	0' - 1 3/8"	D9	HM	SC	D	HM	-	-	-	13	-
104F	1	2' - 6"	6' - 8"	0' - 1 3/8"	D2	HM	SC	A2	HM	-			6	-
104G	1	2' - 6"	6' - 8"	0' - 1 3/8"	D9	HM	SC	D	HM	45MIN	-	-	10	45 MIN
104H	1	3' - 0"	6' - 8"	0' - 1 3/8"	D9	HM	SC	A1	HM	-	-	-	6	-
104J	1	2' - 6"	6' - 8"	0' - 1 3/8"	D9	HM	SC	D	HM	-	-	-	17	-
104K	1	3' - 0"	6' - 8"	0' - 1 3/8"	D7	HM	FR	A	HM	45MIN	-	-	6	-
105	2	3' - 0"	7' - 0"	0' - 1 3/4"	D10	HM	FR	A	HM	45MIN	-	-	16	-
106	2	3' - 0"	7' - 0"	0' - 1 3/4"	D11	HM	FR	A	HM	45MIN	-		16	-
108	1	3' - 0"	6' - 8"	0' - 1 3/8"	D9	HM	FR	A	HM	45MIN	-	-	6	45 MIN
109	1	3' - 0"	6' - 8"	0' - 1 3/8"	D9	HM	FR	A	HM	45MIN	-	-	6	45 MIN
110	1	3' - 0"	6' - 8"	0' - 1 3/8"	D9	HM	FR	A	HM	45MIN	-	-	6	45 MIN
111	1	3' - 0"	6' - 8"	0' - 1 3/8"	D9	HM	FR	A	HM	45MIN	-	-	6	45 MIN
112	2	6' - 0"	6' - 8"	0' - 1 3/8"	D10	HM	FR	A	HM	45MIN			16	
112A	1	2' - 6"	6' - 8"	0' - 1 3/8"	D9	HM	SC	A	HM	45MIN	-	-	6	45 MIN
112B	2	6' - 0"	6' - 8"	0' - 1 3/8"	D10	HM	INS	A	HM	45MIN	TEMP/INS	1"	16	
113	1	3' - 0"	6' - 8"	0' - 1 3/8"	D9	HM	FR	A	HM	-	-	-	6	45 MIN
113A	1	3' - 0"	6' - 8"	0' - 1 3/8"	D9	HM	FR	A	HM	-	-	-	6	45 MIN
114	1	3' - 0"	6' - 8"	0' - 1 3/8"	D9	HM	FR	A	HM	45MIN	-	-	6	45 MIN
114B	1	3' - 0"	6' - 8"	0' - 1 3/8"	D9	HM	FR	A	HM	45MIN	-	-	6	45 MIN
114C	1	2' - 8"	7' - 0"	0' - 1 3/8"	D9	HM	FR	A	HM	45MIN	-	-	6	45 MIN
114D	1	3' - 0"	6' - 8"	0' - 1 3/8"	D9	HM	FR	A	HM	45MIN	-	-	6	45 MIN
115	1	2' - 6"	6' - 8"	0' - 1 3/8"	D9	HM	FR	A	HM	45MIN	-	-	6	45 MIN
125	1	2' - 4"	6' - 8"	0' - 1 3/8"	D9	HM	SC	A	HM	45MIN	-	-	6	45 MIN
126	1	3' - 0"	6' - 8"	0' - 1 3/8"	D9	HM	FR	A	HM	45MIN	-	-	6	45 MIN
126A	1	3' - 0"	6' - 8"	0' - 1 3/8"	D9	HM	FR	A	HM	45MIN	-	-	6	45 MIN
127A	1	3' - 0"	6' - 8"	0' - 1 3/8"	D9	HM	FR	A	HM	45MIN	-	-	6	45 MIN
127B	1	3' - 0"	6' - 8"	0' - 1 3/8"	D9	HM	FR	A	HM	45MIN	-	-	6	45 MIN
135	1	3' - 0"	6' - 8"	0' - 1 3/8"	D9	HM	FR	A	HM	45MIN	-	-	6	45 MIN
135A	1	3' - 0"	6' - 8"	0' - 1 3/8"	D9	HM	FR	A	HM	45MIN	-	-	6	45 MIN
137	1	2' - 4"	6' - 8"	0' - 1 3/8"	D9	HM	SC	A	HM	45MIN	-	-	6	45 MIN
195	1	1' - 2"	6' - 8"	0' - 1 3/8"	D9	HM	FR	A	HM	45MIN	-	-	6	45 MIN
196	1	1' - 2"	6' - 8"	0' - 1 3/8"	D9	HM	FR	A	HM	45MIN	-	-	6	45 MIN
200	1	3' - 0"	6' - 8"	0' - 1 3/8"	D9	HM	FR	A	HM	45MIN	-	-	6	45 MIN
201	1	3' - 0"	6' - 8"	0' - 1 3/8"	D9	HM	FR	A	HM	45MIN	-	-	6	45 MIN
201A	2	3' - 0"	7' - 0"	0' - 1 3/4"	D9	HM	FR	A	HM	45MIN	-	-	6	45 MIN
201B	1	3' - 0"	6' - 8"	0' - 1 3/8"	D9	HM	FR	A	HM	45MIN	-	-	6	45 MIN
201C	1	2' - 6"	6' - 8"	0' - 1 3/8"	D9	HM	FR	A	HM	45MIN	-	-	6	45 MIN
201D	1	3' - 0"	6' - 8"	0' - 1 3/8"	D9	HM	FR	A	HM	45MIN	-	-	6	45 MIN
201E	1	2' - 6"	6' - 8"	0' - 1 3/8"	D9	HM	FR	A	HM	45MIN	-	-	6	45 MIN
201F	1	2' - 6"	6' - 8"	0' - 1 3/8"	D9	HM	FR	A	HM	45MIN	-	-	6	45 MIN
201G	2	3' - 0"	7' - 0"	0' - 1 3/4"	D9	HM	FR	A	HM	45MIN	-	-	6	45 MIN
202	1	3' - 0"	6' - 8"	0' - 1 3/8"	D9	HM	FR	A	HM	45MIN	-	-	6	45 MIN
203	1	3' - 0"	6' - 8"	0' - 1 3/8"	D9	HM	FR	A	HM	45MIN	-	-	6	45 MIN
203A	2	5' - 4"	6' - 8"	0' - 1 3/8"	D9	HM	SC	A	HM	-	-	-	6	45 MIN
204	1	3' - 0"	6' - 8"	0' - 1 3/8"	D9	HM	FR	A	HM	45MIN	-	-	6	45 MIN
204A	1	3' - 0"	6' - 8"	0' - 1 3/8"	D9	HM	SC	A	HM	-	-	-	6	45 MIN
204B	2	5' - 0"	6' - 8"	0' - 2"	D3	HM	SC	C	WD	-	-	-	3	
204C	2	5' - 0"	6' - 8"	0' - 2"	D3	HM	SC	C	WD	-	-	-	3	
205	1	3' - 0"	6' - 8"	0' - 1 3/8"	D9	HM	FR	A	HM	45MIN	-	-	6	45 MIN
215	1	2' - 4"	6' - 8"	0' - 1 3/8"	D9	HM	FR	A	HM	45MIN	-	-	6	45 MIN
216	1	3' - 0"	6' - 8"	0' - 1 3/8"	D9	HM	FR	A	HM	45MIN	-	-	6	45 MIN
216A	1	3' - 0"	6' - 8"	0' - 1 3/8"	D9	HM	FR	A	HM	45MIN	-	-	6	45 MIN
217	1	3' - 0"	6' - 8"	0' - 1 3/8"	D9	HM	FR	A	HM	-	-	-	6	45 MIN
218	1	3' - 0"	6' - 8"	0' - 1 3/8"	D9	HM	FR	A	HM	45MIN	-	-	6	45 MIN
218A	1	3' - 0"	6' - 8"	0' - 1 3/8"	D9	HM	SC	A	HM	-	-	-	6	45 MIN
222	1	3' - 0"	6' - 8"	0' - 1 3/8"	D9	HM	FR	A	HM	45MIN	-	-	6	45 MIN
223	1	3' - 0"	6' - 8"	0' - 1 3/8"	D9	HM	FR	A	HM	45MIN	-	-	6	45 MIN
234	1	2' - 4"	6' - 8"	0' - 1 3/8"	D9	HM	SC	A	HM	-	-	-	6	45 MIN
244	1	3' - 0"	6' - 8"	0' - 1 3/8"	D9	HM	FR	A	HM	45MIN	-	-	6	45 MIN

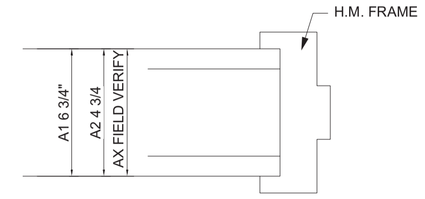

DOOR FRAME TYPE A
SCALE 3"=1'-0"

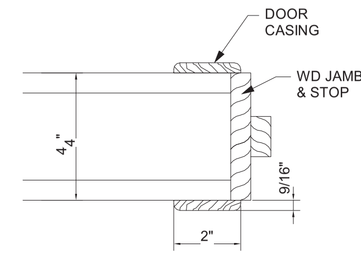

DOOR FRAME TYPE B
SCALE 3"=1'-0"

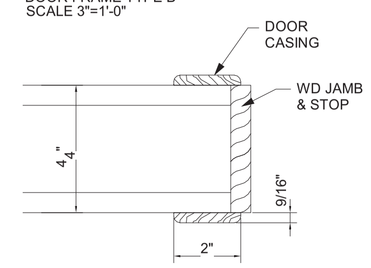

DOOR FRAME TYPE C
SCALE 3"=1'-0"

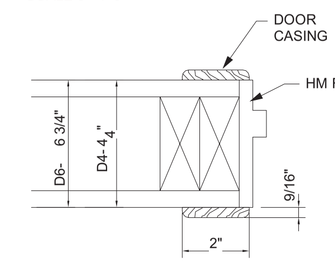

DOOR FRAME TYPE D
SCALE 3"=1'-0"

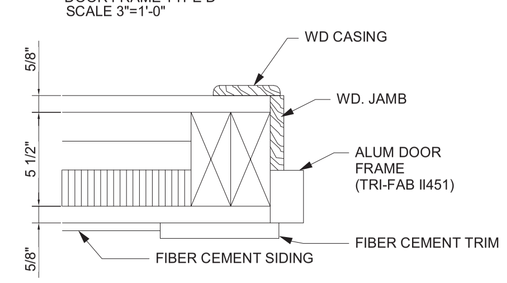

DOOR FRAME TYPE AL-1
SCALE 3"=1'-0"

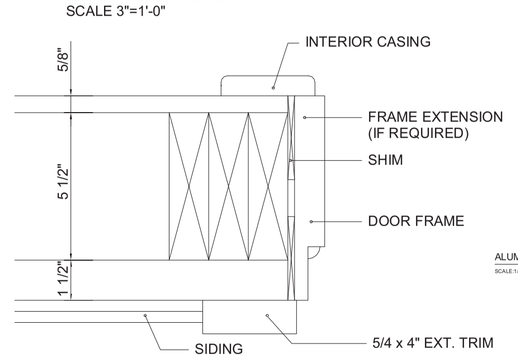

DOOR FRAME TYPE "E"
SCALE 3"=1'-0"

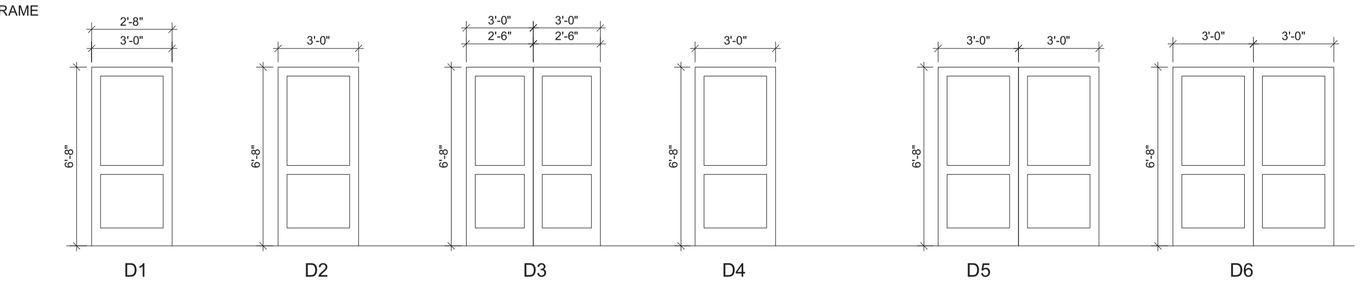

D1

1 3/4 " - STL - 2 PANEL
45 MIN. RATED DOOR
THERMA-TRU 2 PANEL
EMBOSSED DOOR
W/ HANDICAP THRESHOLD
PROVIDE REINFORCING FOR THE
SPECIFIED CLOSERS & HARDWARE
FOR ALL DOORS.

D2

1 3/8 " - SOLID CORE DOOR
CRAFTMASTER CARRARA
2 PANEL - SMOOTH
DOOR FACING

D3

SLIDING CLOSET DOORS
(2) 1 3/8 " - HOLLOW CORE DOOR
CRAFTMASTER CARRARA
2 PANEL - SMOOTH
DOOR FACING

D4

1 3/4 " - STL 2 PANEL
INSULATED CORE
THERMA-TRU EMBOSSED DOOR
NO. 978 - HANDICAP THRESHOLD
HINGES BY DOOR MANUFACTURER
PROVIDE REINFORCING FOR THE
SPECIFIED CLOSERS & HARDWARE.

D5

(2) 1 3/4 " - STL - 2 PANEL
45 MIN RATED DOORS
CECO 2 PANEL EMBOSSED DOOR
NO. HD2 - 20 GAUGE

D6

(2) 1 3/4 " - STL 2 PANEL
INSULATED CORE
THERMA-TRU EMBOSSED DOOR
NO. 978 - HANDICAP THRESHOLD
HINGES BY DOOR MANUFACTURER
PROVIDE REINFORCING FOR THE
SPECIFIED CLOSERS & HARDWARE.

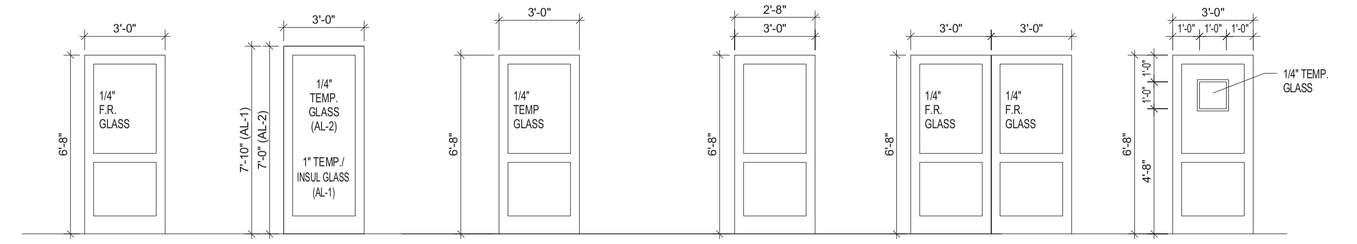

D7

1 3/4 " - HM - HALF GLASS
45 MIN RATED (90 MIN AS NOTED)
CECO 2 PANEL EMBOSSED DOOR
NO. HD2 - 20 GAUGE
W/ UL LISTED STEEL
WINDOW KIT TO
FIT UPPER PANEL

AL1-EXTERIOR
AL2-INTERIOR

ALUMINUM DOOR
WIDE STYLE
WHITE MUTNS
COLOR AS SELECTED
BY THE ARCHITECT

D8

1 3/4 " - H.M. - HALF GLASS
NON RATED
CECO 2 PANEL EMBOSSED DOOR
NO. HD2
W/ WINDOW KIT TO
FIT UPPER PANEL.

D9

1 3/4 " - STL - 2 PANEL - NON RATED
THERMA-TRU 2 PANEL
EMBOSSED DOOR
W/ HANDICAP THRESHOLD
PROVIDE REINFORCING FOR THE
SPECIFIED CLOSERS & HARDWARE
FOR ALL DOORS.

D10

(2) 1 3/4 " - HM - HALF GLASS
45 MIN RATED (90 MIN AS NOTED)
CECO 2 PANEL EMBOSSED DOOR
NO. HD2 - 20 GAUGE
W/ UL LISTED STEEL
WINDOW KIT TO
FIT UPPER PANEL

D11

1 3/4 " - H.M. - 2 PANEL
NON RATED
CECO 2 PANEL EMBOSSED DOOR
NO. HD2 - 20 GAUGE
WITH 1'-0"x1'-0" WINDOW KIT TO
FIT INTO UPPER PANEL.

DOOR TYPES

SCALE:1/4"=1'-0"

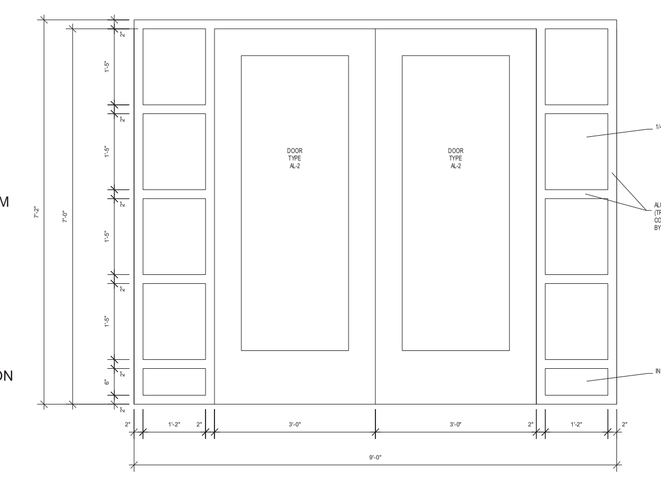

ALUM. DOOR FRAME ELEVATIONS - DOOR NO. 101

SCALE:1/4"=1'-0"

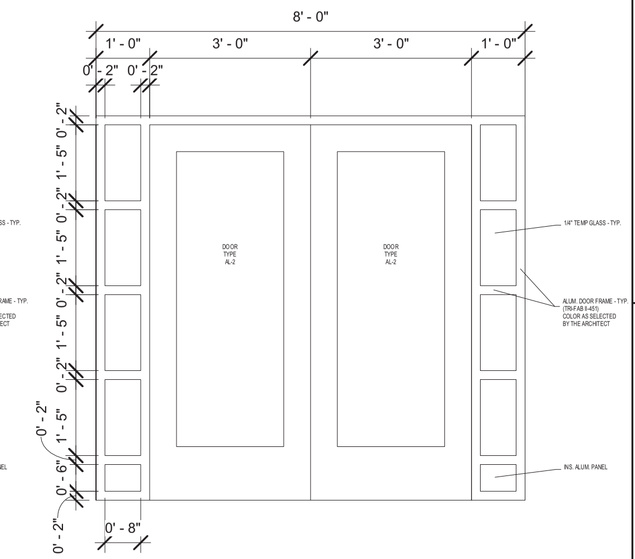

ALUM. DOOR FRAME ELEVATIONS - DOOR NO. 112

SCALE:1/4"=1'-0"

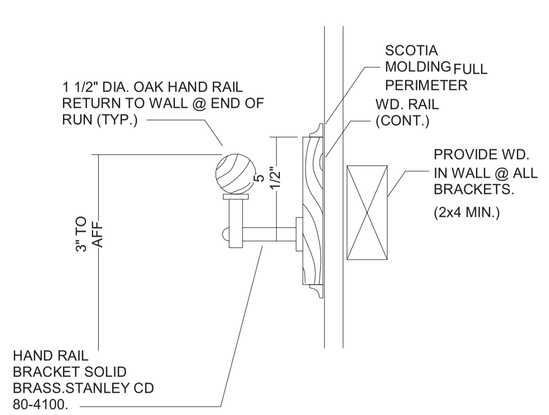

TYPICAL CORRIDOR

HANDRAIL DETAIL
SCALE 3" =1'-0"

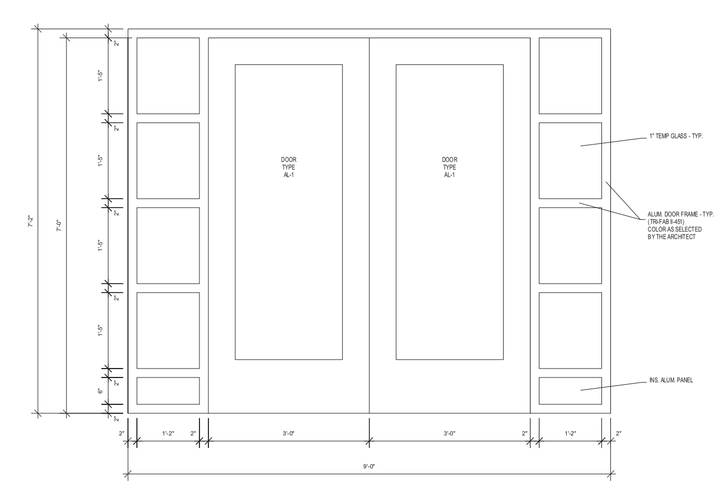

ALUM. DOOR FRAME ELEVATIONS - DOOR NO. 100

SCALE:1/4"=1'-0"

PERMIT SET
05-12-2021

Drawn by	AA
Checked by	DS
Scale	As indicated
Date	Project Status
Revision Date	

DOOR SCHEDULE AND DOOR TYPES

HARRIS A. SANDERS, ARCHITECTS, P.C.
232 WASHINGTON AVENUE, ALBANY, NEW YORK 12210

L'Dor Assisted living
West Clarkstown Road, New City, New York

REGISTERED ARCHITECT DANIEL PAUL SANDERS 024004 STATE OF NEW YORK

A11

Room Finish Schedule					
Room Number	Room Name	Finish			Comments
		Floor	Base	Wall	
001	STORAGE	CONC	VBC-1	PGB	
002	WATER MECH	CONC	VBC-1	PGB	
003	ELEC	CONC	VBC-1	PGB	
004	GARBAGE ROOM	CONC	VBC-1	PGB	
005	STAFF	LVP	VBC-1	PGB	
005A	STAFF BATHROOM	SV-1	VBC-1	PGB	
006	MAINTENANCE	CONC	VBC-1	PGB	
007	STORAGE	CONC	VBC-1	PGB	
008	PANTRY	CONC	VBC-1	PGB	
H001	HALL	CPT	VBC-1	PGB	CHAIR RAIL W/ BUMPER RAIL

Room Finish Schedule					
Room Number	Room Name	Finish			Comments
		Floor	Base	Wall	
100	VESTIBULE	WALK OFF	VBC-1	PGB	
101	WAITING	CPT	VBC-1	PGB	
102	LAV.	SV-2	VBC-1	PGB	
103	CONF.	CPT	VBC-1	PGB	
104	ADMIN	CPT	VBC-1	PGB	
104A	ADMIN OFFICE	CPT	VBC-2	PGB	
104B	RN 1	CPT	VBC-1	PGB	
104C	RN 2	CPT	VBC-1	PGB	
104D	OFFICE	CPT	VBC-1	PGB	
104E	LAV.	SV-3	VBC-1	PGB	
104F	SUPPLIES	VCT	VBC-1	PGB	
104G	CL.	VCT	VBC-1	PGB	
104H	CONF.	CPT	VBC-1	PGB	
105	LOUNGE	CPT	VBC-1	PGB	
106	LOUNGE	CPT	VBC-1	PGB	
107	AIDE STATION	LVP-2	VBC-1	PGB	
108	LAUNDRY	SV-3	VBC-1	PGB	
109	STAFF	CPT	VBC-1	PGB	
110	LAV	SV-5	VBC-2	PGB	
111	LAV	SV-5	VBC-2	PGB	
112	DINING ROOM	LVP-3	VBC-1	PGB	
113	JAN	SV-2	VBC-1	PGB	
H101	MAIN HALL	CPT	VBC-2	PGB	CHAIR RAIL W/ BUMPER RAIL
H102	WEST HALL	CPT	VBC-2	PGB	CHAIR RAIL W/ BUMPER RAIL
H103	EAST HALL	CPT	VBC-2	PGB	CHAIR RAIL W/ BUMPER RAIL
112A	TREATMENT	CPT	VBC-2	PGB	
114	KITCHEN	SV-4	VBC-2	PGB	
114A	OFFICE	CPT	VBC-1	PGB	
113	MED ROOM	LVP-2	VBC-1	PGB	
113A	MED SUPPLIES	LVP-2	VBC-1	PGB	
115	JAN.	SV-2	VBC-2	PGB	
125	JAN	SV-2	VBC-2	PGB	
126	STAIRS	CPT	VBC-1	PGB	VINYL TREADS & RISERS. SEE STAIR DETAILS
127	STAIRS	CPT	VBC-1	PGB	VINYL TREADS & RISERS. SEE STAIR DETAILS

Room Finish Schedule					
Room Number	Room Name	Finish			Comments
		Floor	Base	Wall	
135	STAIRS	CPT	VBC-1	PGB	VINYL TREADS & RISERS. SEE STAIR DETAILS
137	JAN	SV-2	VBC-1	PGB	
201	BEAUTY PARLOR	LVP-2	VBC-1	PGB	
202	COMPUTERS	CPT	VBC-1	PGB	
203	TV LOUNGE	CPT	VBC-1	PGB	
204	ACTIVITIES	CPT	VBC-1	PGB	
204A	ACTIVITIES OFFICE	CPT	VBC-1	PGB	
205	RES LAUN.	SV-3	VBC-1	PGB	
215	JAN.	SV-2	VBC-1	PGB	
216	STAFF LAUNDRY	SV-3	VBC-1	PGB	
217	THERAPY	CPT	VBC-1	PGB	
218	ASS'T	CPT	VBC-1	PGB	
218A	DOCTOR	CPT	VBC-1	PGB	
219	FS HALL	CPT	VBC-2	PGB	CHAIR RAIL W/ BUMPER RAIL
220	FS HALL	CPT	VBC-2	PGB	CHAIR RAIL W/ BUMPER RAIL
221	FS HALL	CPT	VBC-2	PGB	CHAIR RAIL W/ BUMPER RAIL
H201	MAIN HALL	CPT	VBC-2	PGB	CHAIR RAIL W/ BUMPER RAIL
H202	WEST HALL	CPT	VBC-2	PGB	CHAIR RAIL W/ BUMPER RAIL
H203	EAST HALL	CPT	VBC-2	PGB	CHAIR RAIL W/ BUMPER RAIL
222	LIBRARY	CPT	VBC-1	PGB	
223	LAV.	SV-5	VBC-2	PGB	
224	LAV.	SV-5	VBC-2	PGB	
234	JAN.	SV-2	VBC-1	PGB	
007B	STORAGE				

LVP = LUXURY VINYL PLANK

CONC = CONCRETE

CPT = CARPET

SV = SHEET VINYL

VCT = VINYL BASE COMPOSITION TILE

WD = WOOD

VBC = VINYL BASE (COVED)

CEILING TYPES

Type 1. Assembly at Wood Trusses (1 hr Rating UL Design L528): 5/8" Gypsum Board F.C. Type C applied at right angles to resilient furring channel with 1" Type S drywall screws 12" oc and 1-1/2" from edges and joints located mid-way between continuous channels 16" oc secured with 1¼ long No.6 Type S Bugle Herd screws to parallel chord wood trusses 24" oc supporting 3/4" nominal floor sheathing with exterior glue, T&G edges, perpendicular to trusses, joints staggered 4' with construction adhesive and No. 6d ring shank nails 12" oc. Adhesive applied to each top chord and grooved edges of plywood. 6" sound attenuating insulation.

Type 2. Assembly at Wood Joists (1 hr Rating UL Design L501): 5/8" Type X Gypsum Board ceiling, 3/4" floor sheathing with exterior glue screwed and glue to 2x joists, 6" sound attenuating insulation between joists. ½" mineral and fiber board.

Type 3. Suspended Gypsum Board Ceiling (Non-Rated): 5/8" Gypsum Board applied to drywall suspended grid system equal to Armstrong SI8945.6" sound attenuating insulation.

Type 4. Ceiling Roof Assembly (1 hr Rating – UL Design P533) Gypsum Board, Wood Joists, Roof Covering: One Layer 5/8" Type C gypsum wallboard applied at right angles to resilient furring channels 12"OC with 1 1/8" Type S drywall screws 8 OC. Gypsum board end joints attached with screws 8" OC to additional pieces of channel 60 long located 3" back on either side of end joint. Resilient channels applied at right angles to bottom chord of wood roof trusses 24¼" OC with 1 Type S or W screws. Glass fiber or mineral fiber with kraft paper facing applied directly over gypsum board. Trusses supporting 15/32" plywood or OSB roof sheathing applied at right angles to trusses with construction adhesive and 6d ring shank nails 12 OC.

INTERIOR WOOD TRIM TYPES

BASE
- WD-A 5 1/4" COLONIAL BASE (FJ) WITH SHOE MOULDING
- WD-B 5 1/4" COLONIAL BASE (FJ)

CASING APARTMENTS - EQUAL TO BROSCO 8627FJP (2 ROUND CORNERS)

CASING (COMMON AREAS) - EQUAL TO BROSCO 8308 (2 ROUND CORNERS)

CHAIR RAIL - EQUAL TO BROSCO 8308 (2 ROUND CORNERS)

APRON - EQUAL TO BROSCO 8308 (1 ROUND CORNER)

COVE MOULDING - EQUAL TO BROSCO 8027FJP

HANDRAIL - 1 1/2" OAK

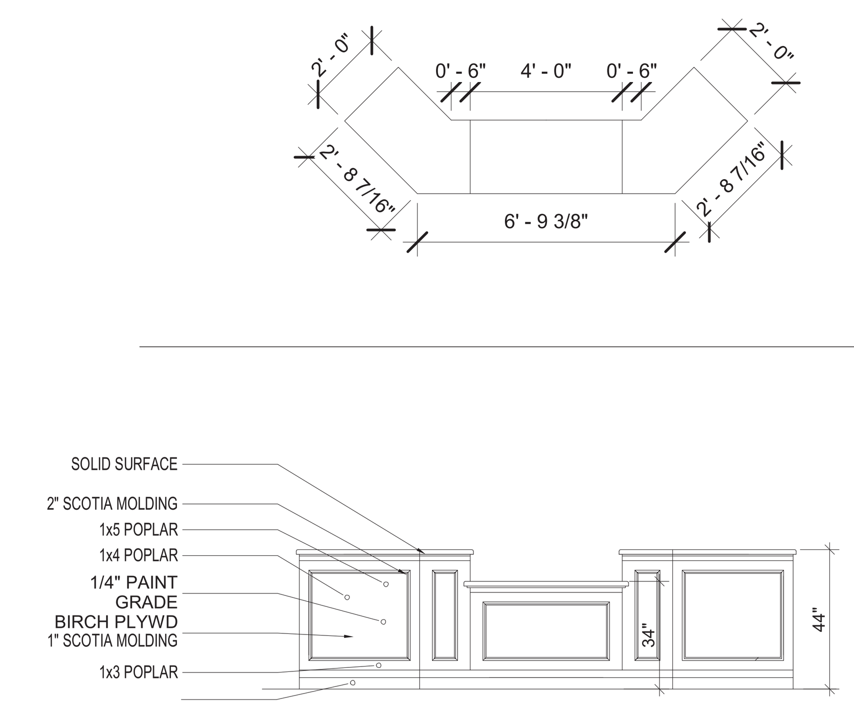

1 A12 FIRST FLOOR AIDE STATION PLAN & ELEVATION
SCALE:1/4"=1'-0"

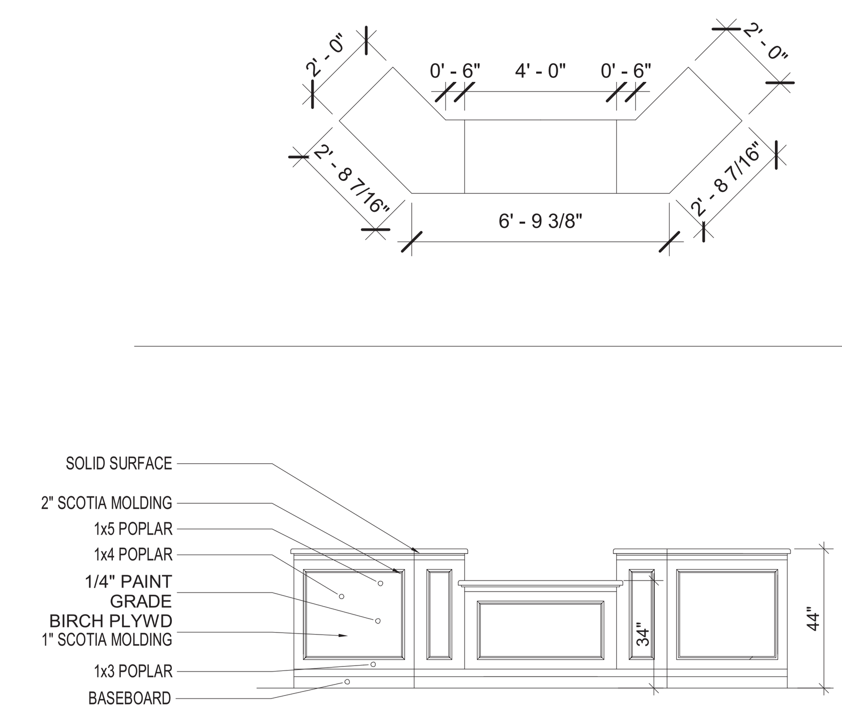

2 A12 SECOND FLOOR AIDE STATION PLAN & ELEVATION
SCALE:1/4"=1'-0"

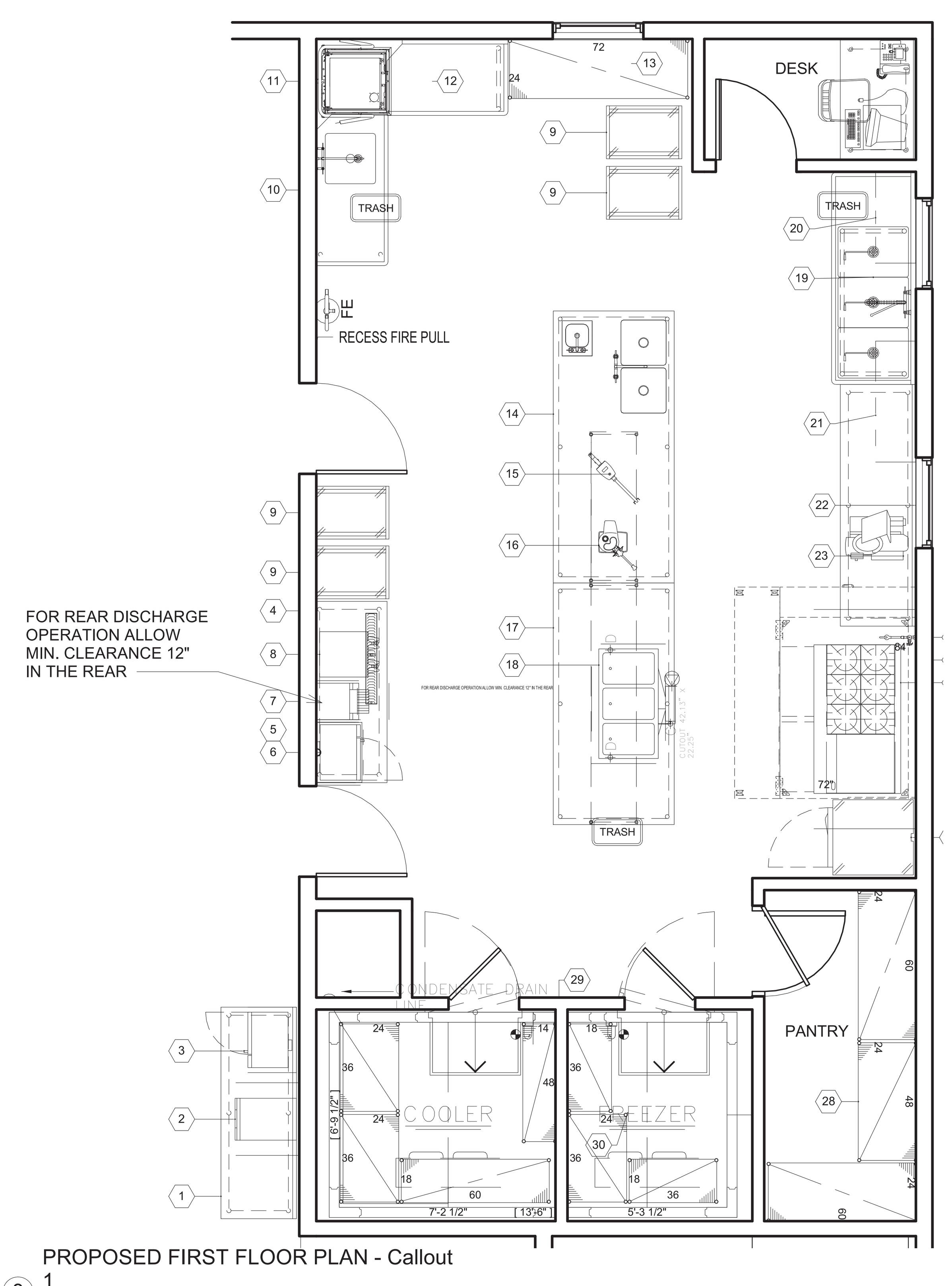

3 PROPOSED FIRST FLOOR PLAN - Callout
1
1/4" = 1'-0"

GREASE TRAP SIZE AND LOCATION BY ENGINEER/ARCHITECT

EQUIPMENT SCHEDULE			
Item	Qty	Category	Equipment Remarks
1	1	WORK TABLE, 84", STAINLESS STEEL TOP	
2	1	ICE & WATER DISPENSER	
	1	WATER FILTRATION SYSTEM	
3	1	MICROWAVE OVEN	
4	1	WORK TABLE, 72", STAINLESS STEEL TOP	
5	1	MICROWAVE OVEN	
6	1	MICROWAVE OVEN, SHELF	
7	1	CONVEYOR TOASTER	
8	1	COFFEE BREWER	
9	4	MOBILE TRAY RACK	
10	1	SOILED DISHTABLE	
	1	PRE-RINSE FAUCET ASSEMBLY	
11	1	DISHWASHER, DOOR TYPE, VENTLESS	
12	1	CLEAN DISHTABLE	
13	4	WIRE SHELVING	
14	1	WORK TABLE, STAINLESS STEEL TOP	
	1	DROP-IN SINK	
	1	DECK MOUNT FAUCET	
	2	SINK BOWL, WELD-IN / UNDERMOUNT	
	1	DECK MOUNT FAUCET	
	1	OVERSHELF	
15	1	IMMERSION BLENDER	
16	1	FOOD PROCESSOR, BENCHTOP / COUNTERTOP	
17	1	WORK TABLE, STAINLESS STEEL TOP	
	1	OVERSHELF	
18	1	HOT FOOD WELL UNIT, DROP-IN, ELECTRIC	
19	1	THREE (3) COMPARTMENT SINK	
	1	PRE-RINSE FAUCET ASSEMBLY, WITH ADD ON FAUCET	
20	1	OVERSHELF	
21	1	OVERSHELF	
22	1	WORK TABLE, 96", STAINLESS STEEL TOP	
23	1	FOOD SLICER, ELECTRIC	
24	1	EXHAUST HOOD	ANSUL FIRE SUPPRESSION CABINET (PART OF HOOD)
25	1	RANGE, 60", 6 BURNERS, 24" GRIDDLE	
26	1	FAUCET, KETTLE / POT FILLER	
27	1	REACH-IN REFRIGERATOR	
28	4	WIRE SHELVING	
29	1	WALK IN COMBINATION COOLER FREEZER, REMOTE	
	1	COND UNIT [COOLER]	
	1	EVAP COIL [COOLER]	
	1	COND UNIT [FREEZER]	
	1	EVAP COIL [FREEZER]	
30	8	WIRE SHELVING	

PERMIT SET
05-12-2021

Drawn by	AA
Checked by	DS
Scale	As indicated
Date	Project Status
Revision Date	

ROOM FINISH SCHEDULE

HARRIS A. SANDERS, ARCHITECTS, P.C.
252 WASHINGTON AVENUE, ALBANY, NEW YORK 12210

L'Dor Assisted living
West Clarkstown Road, New City, New York

REGISTERED ARCHITECT DANIEL PAUL SANDERS 024004 STATE OF NEW YORK

A12

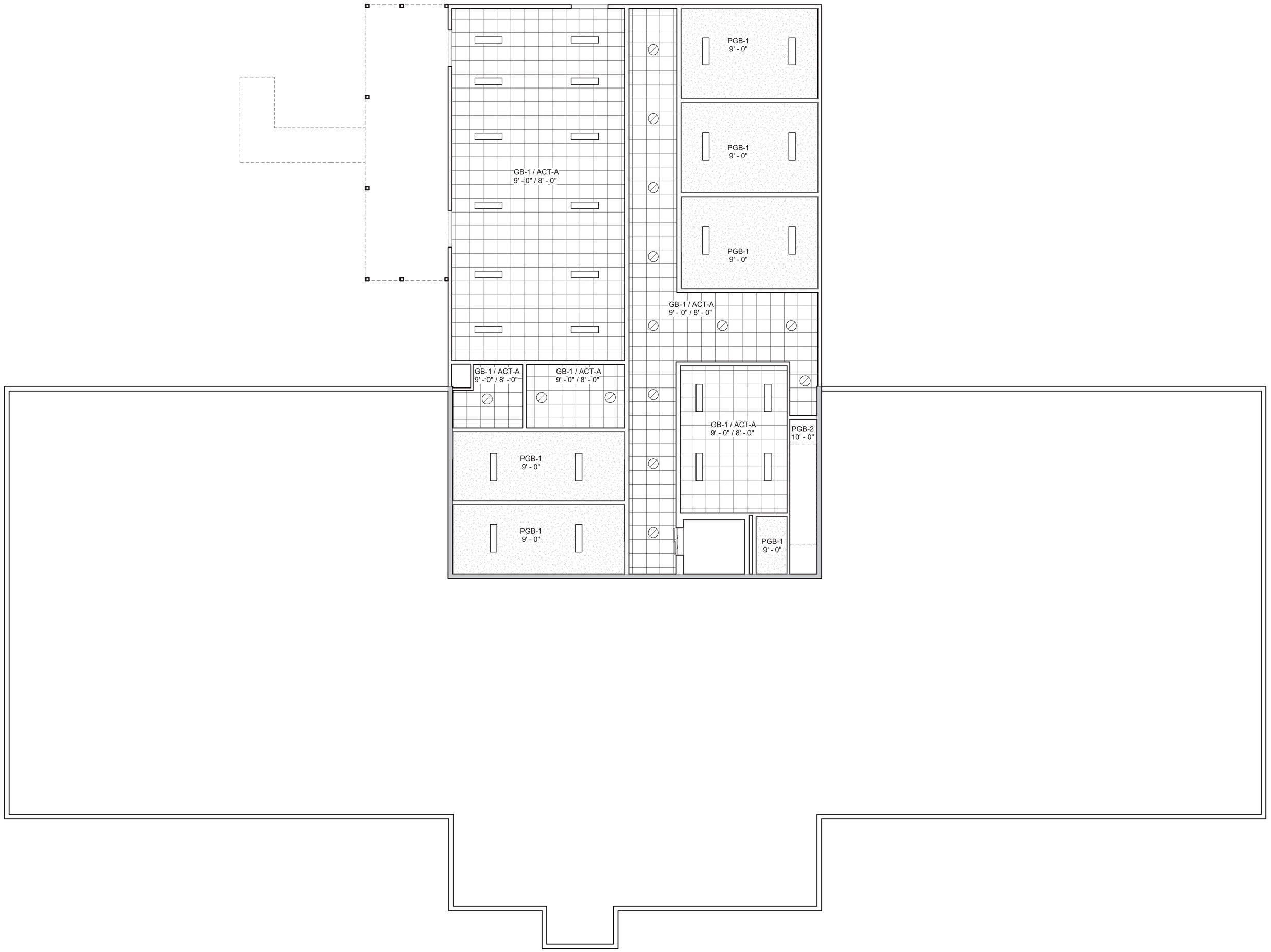

1 BASEMENT REFLECTED CEILING PLAN
1/8" = 1'-0"

1' X 4' LINEAR BOX LIGHT

24" DIA. RECESSED CAN LIGHT

18" DIA. RECESSED CAN LIGHT

8" DIA. RECESSED CAN LIGHT

COORDINATE ALL QUANITITY AND LOCTIONS OF LIGHT FIXTURES WITH DESIGN BUILD DOCUMENTS

CEILING TYPES

TYPE 1. Assembly at Wood Trusses (1 hr Rating UL Design L528): 5/8" Gypsum Board F.C. Type C applied at right angles to resilient furring channel with 1" Type S drywall screws 12" oc and 1-1/2" from edges and joints located mid-way between continuous channels 16" oc secured with 1¼ long No.6 Type S Bugle Herd screws to parallel chord wood trusses 24" oc supporting 3/4" nominal floor sheathing with exterior glue, T&G edges, perpendicular to trusses, joints staggered 4' with construction adhesive and No. 6d ring shank nails 12" oc. Adhesive applied to each top chord and grooved edges of plywood. 6" sound attenuating insulation.

TYPE 2. Assembly at Wood Joists (1 hr Rating UL Design L501): 5/8" Type X Gypsum Board ceiling, 3/4" floor sheathing with exterior glue screwed and glue to 2x joists, 6" sound attenuating insulation between joists. ½" mineral and fiber board.

TYPE 3. Suspended Gypsum Board Ceiling (Non-Rated): 5/8" Gypsum Board applied to drywall suspended grid system equal to Armstrong SI8945.6" sound attenuating insulation.

TYPE 4. Ceiling Roof Assembly (1 hr Rating – UL Design P533) Gypsum Board, Wood Joists, Roof Covering: One Layer 5/8" Type C gypsum wallboard applied at right angles to resilient furring channels 12 "OC with 1 1/8" Type S dryw"all screws 8 OC. Gypsum board end joints attached with screws 8" OC to additional pieces of channel 60" long located 3" back on either side of end joint. Resilient channels applied at right angles to bottom chord of wood roo" f trusses 24¼" OC with 1 Type S or W screws. Glass fiber or mineral fiber with kraft paper facing applied directly over gypsum board. Trusses supporting 15/32 " plywood or OSB roof sheathing applied at right angles to trusses with construction adhesive and 6d ring sh"ank nails 12 OC.

PERMIT SET
05-12-2021

Drawn by	AA
Checked by	DS
Scale	As indicated
Date	Project Status
Revision Date	

BASEMENT REFLECTED CEILING PLAN

HARRIS A. SANDERS, ARCHITECTS, P.C.
252 WASHINGTON AVENUE, ALBANY, NEW YORK 12210

L'Dor Assisted living
West Clarkstown Road, New City, New York

REGISTERED ARCHITECT
DANIEL PAUL SANDERS
024004
STATE OF NEW YORK

A13

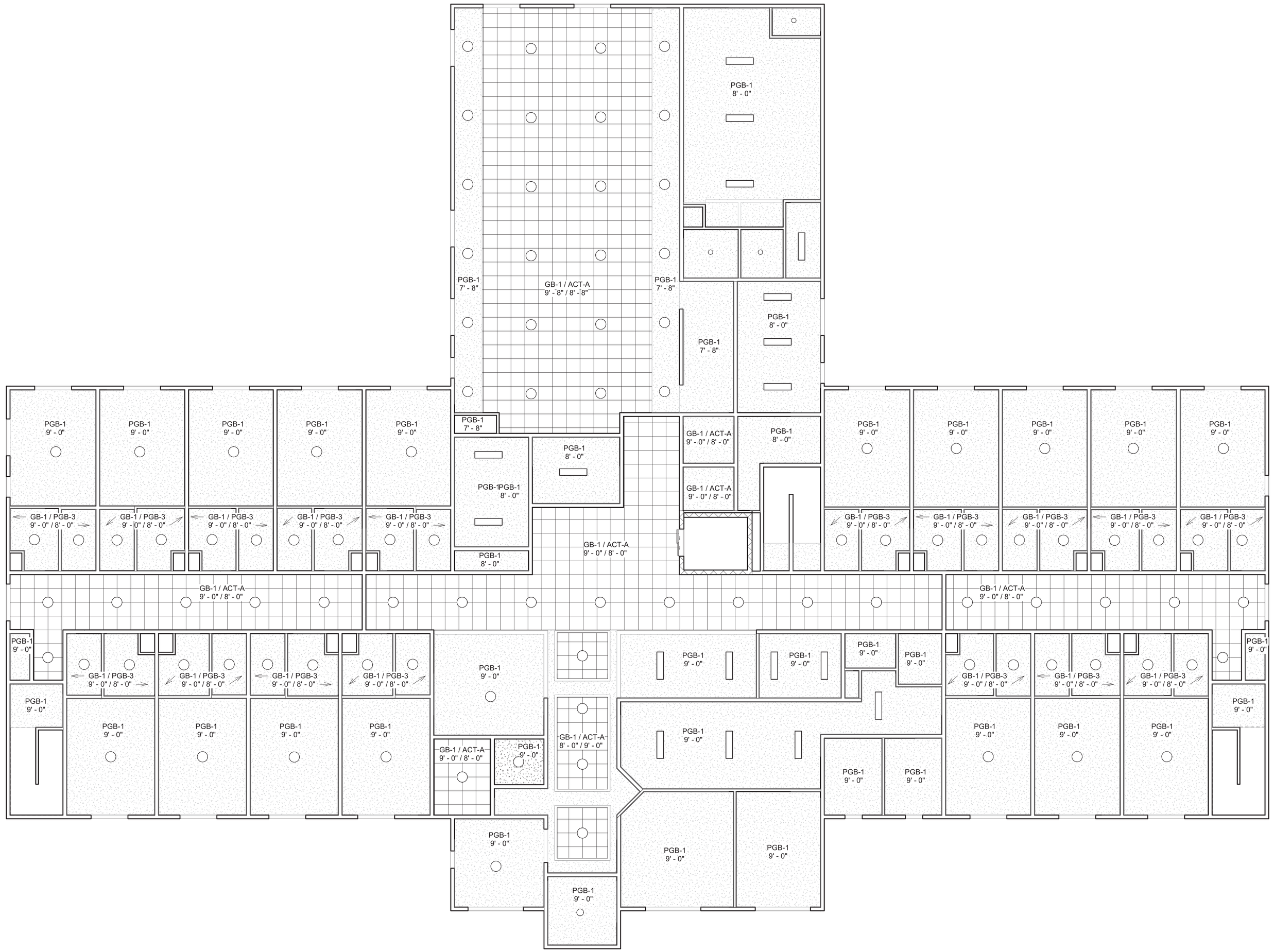

1' X 4' LINEAR BOX LIGHT

24" DIA. RECESSED CAN LIGHT

18" DIA. RECESSED CAN LIGHT

8" DIA. RECESSED CAN LIGHT

COORDINATE ALL QUANITITY AND LOCTIONS OF LIGHT FIXTURES WITH DESIGN BUILD DOCUMENTS

CEILING TYPES

TYPE 1. Assembly at Wood Trusses (1 hr Rating UL Design L528): 5/8" Gypsum Board F.C. Type C applied at right angles to resilient furring channel with 1" Type S drywall screws 12" oc and 1-1/2" from edges and joints located mid-way between continuous channels 16" oc secured with 1¼ long No.6 Type S Bugle Herd screws to parallel chord wood trusses 24" oc supporting 3/4" nominal floor sheathing with exterior glue, T&G edges, perpendicular to trusses, joints staggered 4' with construction adhesive and No. 6d ring shank nails 12" oc. Adhesive applied to each top chord and grooved edges of plywood. 6" sound attenuating insulation.

TYPE 2. Assembly at Wood Joists (1 hr Rating UL Design L501): 5/8" Type X Gypsum Board ceiling, 3/4" floor sheathing with exterior glue screwed and glue to 2x joists, 6" sound attenuating insulation between joists. ½" mineral and fiber board.

TYPE 3. Suspended Gypsum Board Ceiling (Non-Rated): 5/8" Gypsum Board applied to drywall suspended grid system equal to Armstrong SI8945.6" sound attenuating insulation.

TYPE 4. Ceiling Roof Assembly (1 hr Rating – UL Design P533) Gypsum Board, Wood Joists, Roof Covering: One Layer 5/8" Type C gypsum wallboard applied at right angles to resilient furring channels 12 "OC with 1 1/8" Type S dryw"all screws 8 OC. Gypsum board end joints attached with screws 8" OC to additional pieces of channel 60" long located 3" back on either side of end joint. Resilient channels applied at right angles to bottom chord of wood roo" f trusses 24¼" OC with 1 Type S or W screws. Glass fiber or mineral fiber with kraft paper facing applied directly over gypsum board. Trusses supporting 15/32 " plywood or OSB roof sheathing applied at right angles to trusses with construction adhesive and 6d ring sh"ank nails 12 OC.

PERMIT SET
05-12-2021

1 FIRST FLOOR REFLECTED CEILLING PLAN
1/8" = 1'-0"

Drawn by	AA
Checked by	DS
Scale	As indicated
Date	Project Status
Revision Date	

PROPOSED FIRST FLOOR REFLECTED CEILING PLAN

HARRIS A. SANDERS, ARCHITECTS, P.C.
232 WASHINGTON AVENUE, ALBANY, NEW YORK 12210

L'Dor Assisted living
West Clarkstown Road, New City, New York

REGISTERED ARCHITECT
DANIEL PAUL SANDERS
024004
STATE OF NEW YORK

A14

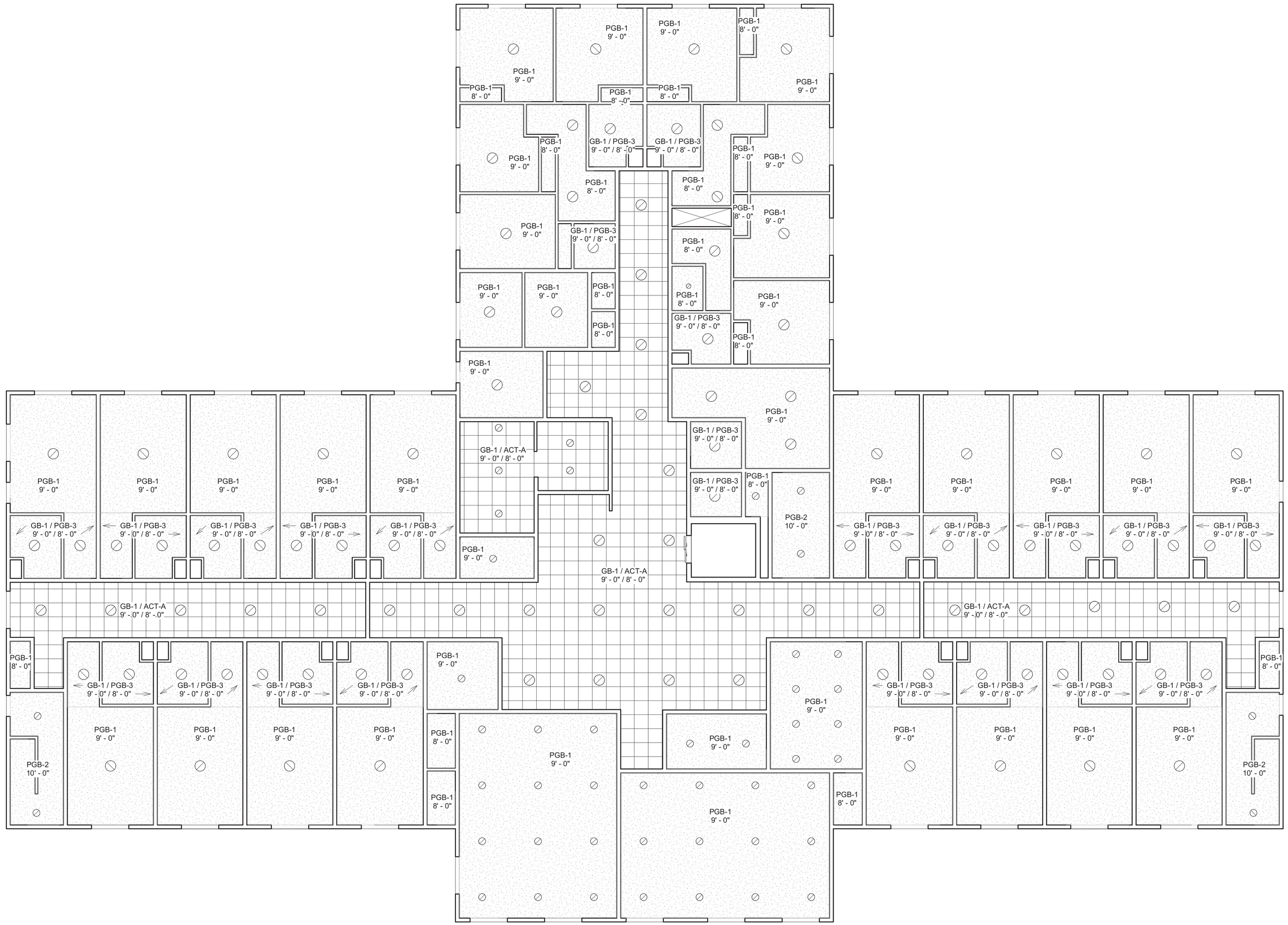

1' X 4' LINEAR BOX LIGHT

24" DIA. RECESSED CAN LIGHT

18" DIA. RECESSED CAN LIGHT

8" DIA. RECESSED CAN LIGHT

COORDINATE ALL QUANITITY AND LOCTIONS OF LIGHT FIXTURES WITH DESIGN BUILD DOCUMENTS

CEILING TYPES

TYPE 1. Assembly at Wood Trusses (1 hr Rating UL Design L528): 5/8" Gypsum Board F.C. Type C applied at right angles to resilient furring channel with 1" Type S drywall screws 12" oc and 1-1/2" from edges and joints located mid-way between continuous channels 16" oc secured with 1¼ long No.6 Type S Bugle Herd screws to parallel chord wood trusses 24" oc supporting 3/4" nominal floor sheathing with exterior glue, T&G edges, perpendicular to trusses, joints staggered 4' with construction adhesive and No. 6d ring shank nails 12" oc. Adhesive applied to each top chord and grooved edges of plywood. 6" sound attenuating insulation.

TYPE 2. Assembly at Wood Joists (1 hr Rating UL Design L501): 5/8" Type X Gypsum Board ceiling, 3/4" floor sheathing with exterior glue screwed and glue to 2x joists, 6" sound attenuating insulation between joists. ½" mineral and fiber board.

TYPE 3. Suspended Gypsum Board Ceiling (Non-Rated): 5/8" Gypsum Board applied to drywall suspended grid system equal to Armstrong SI8945.6" sound attenuating insulation.

TYPE 4. Ceiling Roof Assembly (1 hr Rating – UL Design P533) Gypsum Board, Wood Joists, Roof Covering: One Layer 5/8" Type C gypsum wallboard applied at right angles to resilient furring channels 12 "OC with 1 1/8" Type S dryw"all screws 8 OC. Gypsum board end joints attached with screws 8" OC to additional pieces of channel 60" long located 3" back on either side of end joint.
Resilient channels applied at right angles to bottom chord of wood roo" f trusses 24¼" OC with 1 Type S or W screws. Glass fiber or mineral fiber with kraft paper facing applied directly over gypsum board. Trusses supporting 15/32 " plywood or OSB roof sheathing applied at right angles to trusses with construction adhesive and 6d ring sh"ank nails 12 OC.

1 SECOND FLOOR REFLECTED CEILING PLAN
1/8" = 1'-0"

PERMIT SET
05-12-2021

Drawn by	AA
Checked by	DS
Scale	As indicated
Date	Project Status
Revision Date	

PROPOSED SECOND FLOOR REFLECTED CEILING PLAN

HARRIS A. SANDERS, ARCHITECTS, P.C.
222 WASHINGTON AVENUE, ALBANY, NEW YORK 12210

L'Dor Assisted living
West Clarkstown Road, New City, New York

REGISTERED ARCHITECT DANIEL PAUL SANDERS 024004 STATE OF NEW YORK

A15

NATURAL GAS WATER HEATER SCHEDULE

TAG NO.	GPH RECOVERY @ 100°F RISE	VENT SIZE	NATURAL GAS CFH	STORAGE CAPACITY GALLONS	REFERENCE MANUFACTURER
GWH-1	291	4", 6"	250	100	BRADFORD WHITE EF-100T-250E3N
GWH-1	291	4", 6"	250	100	BRADFORD WHITE EF-100T-250E3N

GREASE INTERCEPTOR SCHEDULE

TAG NO.	LOCATION	GPM FLOW RATE	GREASE CAP. (LBS.)	SIZE W	SIZE L	SIZE D	CONNECTION SIZE INLET	CONNECTION SIZE OUTLET	MANUFACTURER AND REMARKS
GT-1	KITCHEN	15	30	16.75"	27.25"	13.375"	3"	3"	ZURN Z1170 MODEL 400. PROVIDE EXTENSION RINGS TO FINISH FLOOR AS REQUIRED.

EXPANSION TANK SCHEDULE

TAG NO.	LOCATION	SERVICE	MAXIMUM SYSTEM PRESSURE (PSI)	TANK VOLUME (GALS.)	ACCEPTANCE VOLUME (GALS.)	MANUFACTURER AND REMARKS
ET-1	WATER ROOM	DOMESTIC HOT WATER	125	14	9	AMTROL ST-30VC

MASTER MIXING VALVE SCHEDULE

TAG NO.	LOCATION	SERVICE	TYPE	DESIGN RANGE (GPM)	MAX PRESS DROP (PSI) AT PEAK FLOW	PEAK FLOW (GPM)	MANUFACTURER AND REMARKS
MV-1	WATER ROOM	BUILDING HOT WATER	ELETRONIC	45	10	70	CALEFFI - LEGIOMIX 6000

PLUMBING PUMPS SCHEDULE

PUMP NO.	LOCATION	SERVICE	GPM	HEAD (FT.)	ELECTRICAL VOLTS	PHASE	CYCLE	HP	RPM	REFERENCE MANUFACTURER AND REMARKS
ESP-1	ELEVATOR SUMPS	WASTE WATER	55	16	115	1	60	1/2	3600	STANCOR MODEL SE50
PP-1	WATER ROOM	140°F WATER	VAR.	25	115	1	60	1/6	VAR.	B&G ECO-CIRC XL 36-45
PP-2	WATER ROOM	125°F WATER	VAR.	25	115	1	60	1/6	VAR.	B&G ECO-CIRC XL 36-45

PLUMBING SPECIALTIES SCHEDULE

TAG NO.	DESCRIPTION	LOCATION	BODY	STRAINER	MANUFACTURER AND REMARKS
FS-A	FLOOR SINK	KITCHEN	CAST IRON	NICKEL BRONZE	JAY R. SMITH FIG. 3100Y-A, 6" DEEP, 8" SQ.
FD-A	FLOOR DRAIN	UNFINISHED AREAS	CAST IRON	POLISHED BRONZE	JAY R. SMITH FIG. 2010C-A
FD-B	FLOOR DRAIN	ELEVATOR	CAST IRON	POLISHED BRONZE	JAY R. SMITH FIG. 2010C-A WITH FUNNEL
NFWH/HB	FREEZELESS WALL HYDRANT	SEE DRAWINGS	N/A	N/A	WOODFORD MODEL B67, CHROME FINISH, 3/4", LOOSE KEY WITH BACKFLOW PREVENTER
TB-1	THERMOSTATIC BALANCING VALVE	HW RETURN LOOPS (HWR) SEE DRAWINGS	LOW LEAD BRASS	N/A	CALEFFI MFG. THERMOSETTER RECIRCULATION THERMAL BALANCING VALVE 1164 SERIES

LINT INTERCEPTOR (LT)

TAG NO.	LOCATION	GPM FLOW RATE	INSTALLATION	SIZE W	SIZE L	SIZE D	CONNECTION SIZE INLET	CONNECTION SIZE OUTLET	MANUFACTURER AND REMARKS
LT-1	BASEMENT MAINTENANCE	70	SET IN FLOOR	25"	25"	20"	3"	3"	ZURN Z1185

PLUMBING FIXTURE CONNECTION SCHEDULE

SEE PLUMBING SPECIFICATIONS FOR COMPLETE FIXTURE INFORMATION

TAG NO.	DESCRIPTION		COLD WATER	HOT WATER	WASTE	SANITARY	VENT	REMARKS
WC-A	WATER CLOSET	ADA	1/2"	-	-	3"	2"	FLOOR MOUNT, TANK TYPE, 17" HEIGHT TO TOP OF SEAT (ADA)
LAV-A	PUBLIC LAVATORY	ADA	1/2"	1/2"	2"	-	1-1/2"	WALL HUNG CHINA, 20" X 18", CHICAGO SENSOR FAUCET
LAV-B	PRIVATE LAVATORY	ADA	1/2"	1/2"	2"	-	1-1/2"	21" X 17" OVAL UNDERMOUNT, CHICAGO SINGLE LEVER FAUCET
SK-A	SINK		1/2"	1/2"	2"	-	1-1/2"	SINGLE BOWL STAINLESS STEEL, SELF RIMMING, 6" DEEP, SINGLE LEVER WITH 9-1/2" SWING SPOUT
SH-A	SHOWER		1/2"	1/2"	2"	-	2"	ONE-PIECE ACRYLIC SHOWER
MB-A	MOP BASIN		1/2"	1/2"	3"	-	2"	24" X 24" X 10" MOLDED STONE WITH BUMPER GUARDS, MOP BRACKET. PROVIDE CHECK VALVES ON SUPPLY LINES.
WMB	WASHING MACHINE BOX		1/2"	1/2"	2"	-	2"	GUY GREY MODEL DLWB1

PLUMBING GENERAL NOTES

SUBMIT ALL REQUIRED PLUMBING DOCUMENTS TO LOCAL PLUMBING OFFICIAL FOR APPROVAL. THE ENTIRE PLUMBING SYSTEM SHALL BE INSTALLED IN COMPLIANCE WITH ALL APPLICABLE BUILDING CODES, REGULATIONS, LOCAL REQUIREMENTS AND PROJECT SPECIFICATIONS.

THE PLUMBING CONTRACTOR SHALL COORDINATE ALL PIPING WITH MECHANICAL, ELECTRICAL, ARCHITECTURAL, AND STRUCTURAL TRADES PRIOR TO CONSTRUCTION TO AVOID INTERFERENCE.

PLUMBING CONTRACTOR SHALL CONNECT ALL ITEMS OF EQUIPMENT FURNISHED BY OTHERS AND UNDER OTHER SECTIONS OF THE SPECIFICATIONS. CONTRACTOR SHALL PROVIDE ALL ITEMS NECESSARY TO COMPLETE THE PLUMBING INSTALLATION.

REFER TO ARCHITECTURAL DRAWING FOR ROUGHING DIMENSIONS OF PLUMBING FIXTURE MOUNTINGS HEIGHTS.

PROVIDE UNIONS FOR ALL PIPING CONNECTIONS TO EQUIPMENT.

ALL PLUMBING FIXTURES AND EQUIPMENT SHALL BE IN COMPLIANCE WITH CURRENT APPLICABLE ENERGY CONSERVATION CODES.

ALL PIPING AND EQUIPMENT IS SHOWN DIAGRAMMATICALLY ONLY. GENERAL ORIENTATION SHOWN IN PLAN AND SECTIONAL DRAWINGS. EXACT LOCATION SHALL BE DETERMINED IN FIELD. MAINTAIN HEAD ROOM AND SPACE CONDITIONS AT ALL TIMES. ALL WORK SHALL BE COORDINATED WITH ALL TRADES BEFORE PROCEEDING WITH INSTALLATION. PRIOR TO CONSTRUCTION, CONTRACTOR SHALL NOTIFY ARCHITECT/ENGINEER OF ANY DISCREPANCIES. PRIOR TO EQUIPMENT SUBMITTALS, CONTRACTOR SHALL VERIFY EXISTING AND PROPOSED CONDITIONS SUCH AS CORRIDORS, PASSAGE-WAY ROOM SIZES, ETC. TO ENSURE SPECIFIED EQUIPMENT CAN BE PROPERLY INSTALLED.

INSTALL PIPING CLOSE TO WALLS, PARTITIONS, CEILINGS, ETC. OFFSET ONLY WHERE NECESSARY TO FOLLOW WALLS, AS INDICATED. PROVIDE ALL NECESSARY FITTINGS, OFFSETS, VALVES AND OTHER DEVICES REQUIRED FOR A COMPLETE INSTALLATION.

INSTALL PIPING IN A CONCEALED MANNER, STRAIGHT, PLUMB AND AS DIRECT AS POSSIBLE. FORM RIGHT ANGLES PARALLEL WITH BUILDING WALLS. LOCATE GROUPS OF PIPES PARALLEL TO EACH OTHER. PIPE SHALL BE LOCATED TO PERMIT ACCESS FOR SERVICE VALVES.

ALL PIPING SHALL BE REAMED TO BE FREE OF BURRS. KEEP PIPING FREE FROM SCALE AND DIRT. PROTECT OPEN PIPE ENDS WHENEVER WORK IS SUSPENDED DURING CONSTRUCTION TO PREVENT FOREIGN MATERIAL FROM ENTERING, AND CAP ALL OPEN ENDS DURING CONSTRUCTION WITH APPROVED TEMPORALLY CAPS OR MATERIALS.

MAINTENANCE LABELS SHALL BE AFFIXED TO ALL PLUMBING EQUIPMENT AND MAINTENANCE AND OPERATION MANUALS SHALL BE PROVIDED TO OWNER.

INSTALL WELDED OR THREADED PIPE IN AREAS WHERE SPACE IS CRITICAL BETWEEN FINISHED CEILING AND STRUCTURAL SURFACE. INSTALL ALL VENTS THRU ROOF 10'-0" MINIMUM FROM EDGE OF ROOF AND 25'-0" FROM FRESH AIR INTAKES.

IF REQUIRED, SUBMIT APPROVED PRESSURE REDUCING VALVES & BACKFLOW PREVENTION DEVICES TO WATER AUTHORITY. CONTRACTOR SHALL PROVIDE ALL NECESSARY DEVICES PER WATER AUTHORITY REQUIREMENTS AND MANUFACTURER RECOMMENDATIONS.

ALL WALL, CEILING AND FLOOR PENETRATIONS CONVEYING PLUMBING AND DRAINS SHALL BE FULLY SEALED AND CAULKED AROUND THE PENETRATING FEATURE TO RESTORE THE REQUIRED FIRE OR SMOKE BARRIER RATING OF THE WALL, CEILING OR FLOOR PENETRATED. AT A MINIMUM, AT ALL LOCATIONS A TWENTY (20) MINUTE FIRE/SMOKE RESISTANCE SHALL BE MAINTAINED. WHERE REQUIRED BY CODE, THE PENETRATING FEATURES SHALL ALSO BE SUPPLIED AND INSTALLED WITH A MECHANISM OR MATERIAL WHICH WILL MAINTAIN THE WALL, CEILING OR FLOOR RATING IN THE EVENT OF A FIRE.

PLUMBING OR SPRINKLER RELATED PIPE SHALL NOT PENETRATE INTO OR PASS THROUGH STAIRWAYS UNLESS IT IS REQUIRED FOR SERVICING THE STAIRWAY OR IT IS SEGREGATED FROM THE STAIRWAY PASSAGEWAY BY AN ENCLOSURE SYSTEM RATED EQUAL TO OR GREATER THAN THE REQUIRED STAIRWAY RATING.

INSTALL WATER HAMMER ARRESTORS IN COMPLIANCE WITH ALL APPLICABLE CODES. WATER HAMMER ARRESTORS SHALL BE AS INDICATED ON THE RISER DIAGRAMS. SIZE OF WATER HAMMER ARRESTORS SHALL BE ACCORDING TO THE WATER HAMMER SCHEDULE AND MANUFACTURER'S RECOMMENDATIONS FOR THAT BRANCH LINE.

CLEANOUTS SHALL BE PROVIDED AS INDICATED ON PLANS AND AS REQUIRED BY THE LOCAL CODES.

PRIOR TO INSTALLING ANY PIPING, VERIFY EXISTING OR NEW INVERT ELEVATIONS, LOCATIONS AND PIPE SIZES. INSTALL ALL SANITARY, WASTE, AND STORM MAINS BEGINNING AT LOW POINT OF EACH SYSTEM AND CONTINUE WITH UNBROKEN CONTINUITY OF INVERT. LOW POINT OF EACH SYSTEM SHALL BE COORDINATED WITH SITE UTILITIES CONTRACTOR. REFER TO SITE UTILITY PLANS FOR REFERENCE.

DRAIN VALVES SHALL BE PROVIDED ON LOWEST POINT OF ALL DOMESTIC WATER RISERS AS FOLLOWS: 1-1/2" OR LESS-PROVIDE 1/2" DRAIN VALVE. 2" OR LARGER-PROVIDE 3/4" DRAIN VALVE.

PROVIDE ISOLATION VALVES AT ALL FIXTURES AND EQUIPMENT.

PLUMBING SYMBOL LIST

SYMBOL	DESCRIPTION
	EXISTING WORK TO BE REMOVED
	POINT OF CONNECTION
	POINT OF DISCONNECTION
NTS	NOT TO SCALE
(E)	EXISTING
(ETR)	EXISTING TO REMAIN
AFF	ABOVE FINISHED FLOOR
BFF	BELOW FINISHED FLOOR
VTR	VENT THRU ROOF
GC	GENERAL CONTRACTOR
MC	MECHANICAL CONTRACTOR
PC	PLUMBING CONTRACTOR
EC	ELECTRICAL CONTRACTOR
—(E)—	EXISTING PIPING
	NEW PIPING LOCATED ABOVE FLOOR/SLAB
	NEW PIPING LOCATED BELOW FLOOR/SLAB
	COLD WATER PIPING (CW)
	HOT WATER PIPING (HW)
	HOT WATER RECIRCULATING PIPING (HWR)
—140—	140° HOT WATER PIPING (HW)
—TW—	TEMPERED HOT WATER PIPING (TW)
—TWR—	TEMPERED HOT WATER RETURN PIPING (TWR)
—W—	WATER SERVICE - EXTERIOR
—SAN—	SANITARY SEWER PIPING
—IW—	INDIRECT WASTE PIPING (IW)
	VENT PIPING
—ST—	STORM WATER SEWER PIPING (ST)
—G—	NATURAL GAS PIPING (G)
—LPG—	LP GAS PIPING (LPG)
	ELBOW DOWN
	45° OFFSET
	ELBOW UP
	BOTTOM/TEE CONNECTION
	TOP TEE CONNECTION
	"P" TRAP
	PIPE CONTINUATION
	CAP OR PLUG
	DECK PLATE CLEANOUT (DPCO)
	WALL PLATE CLEANOUT (WPCO)
	CLEANOUT (CO)
	FLOOR DRAIN (FD) / FLOOR SINK (FS)
	ROOF DRAIN
	WALL HYDRANT (WH) / HOSE BIBB (HB)
	STRAINER
M	WATER METER
	FULL PORT BALL VALVE
	BALANCING VALVE
	CHECK VALVE
	SOLENOID VALVE
	PRESSURE REDUCING VALVE
	RELIEF VALVE
$	SHUT-OFF SWITCH
	PIPE ANCHOR
	PIPE GUIDE
	UNION
	BACKFLOW PREVENTER (BFP)
	SHOCK ABSORBER (SA)
	RECIRCULATION PUMP
	THERMOMETER
	PRESSURE GAUGE
T	TRAP PRIMER (TP)

M/E ENGINEERING
Mechanical/Electrical Engineering Consultants
M/E Project #: 203095
Schenectady | Rochester | Syracuse | Buffalo
433 STATE STREET, SUITE 410
SCHENECTADY, NY 12305
518.533.2171
www.meengineering.com

DATE: 5/12/2021
REVISED:

PROJECT NO: 203095
DESIGNED BY: JME
DRAWN BY: JME
CHECKED BY: RSA
SCALE: AS NOTED
NOTES:

NOTES, SCHEDULES & LEGEND

HARRIS A. SANDERS ARCHITECTS, P.C.
252 WASHINGTON AVENUE, ALBANY, NEW YORK 12210

L'DOR ADULT CARE FACILITY
156 WEST CLARKSTOWN ROAD
NEW CITY N.Y. 10956

STATE OF NEW YORK ★ MICHAEL K. SULLIVAN ★ LICENSED PROFESSIONAL ENGINEER 077887-1

SHEET NO: P001
OF:

PERMIT SET 05-12-21

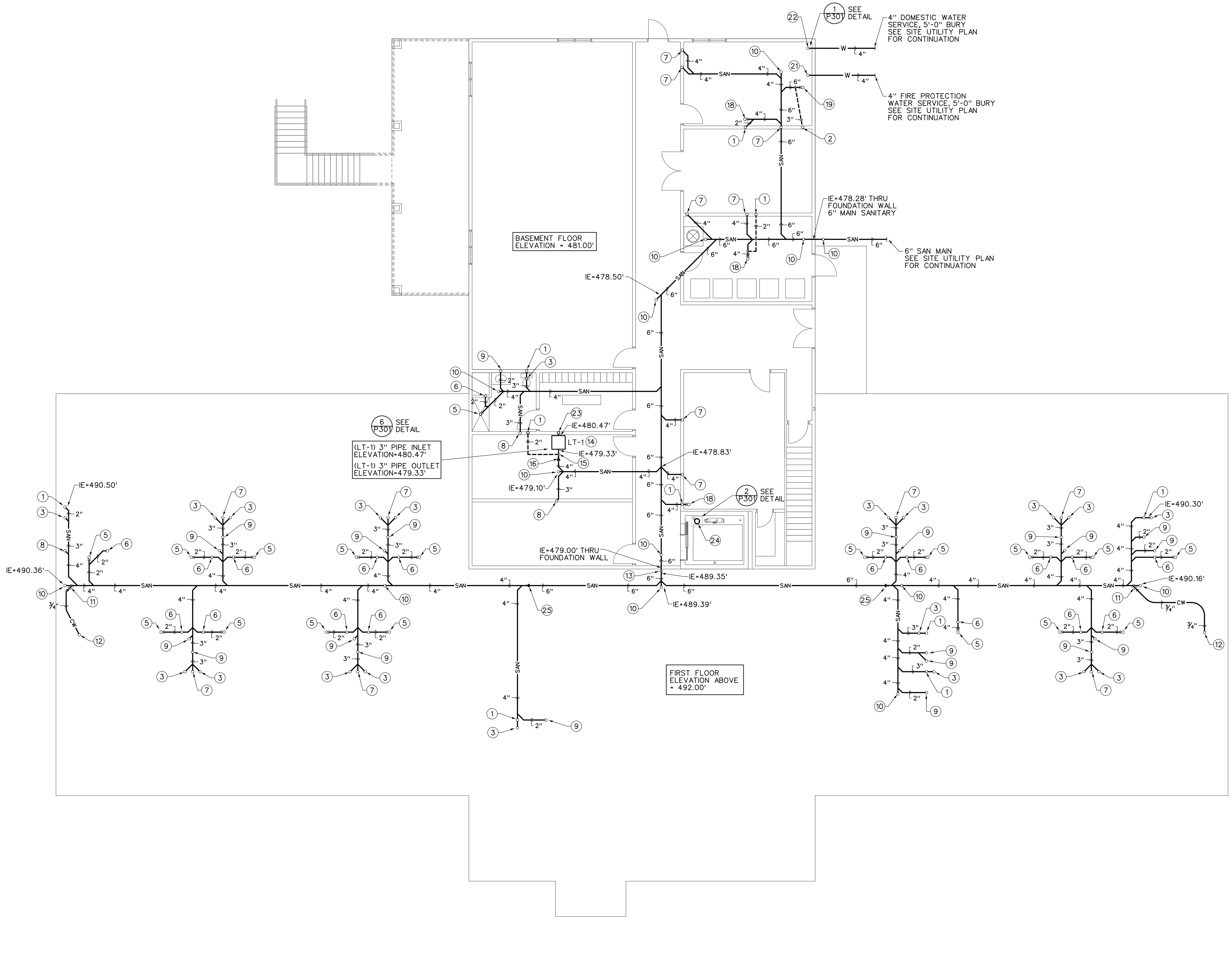

BELOW FLOOR SANITARY AND VENT PLUMBING PLAN 1/P100
SCALE: 1/8" = 1'-0"

GENERAL NOTES:

A. ALL PIPING IS ABOVE THE CEILING UNLESS OTHERWISE INDICATED.
B. ALL PIPING SHALL BE INSTALLED CONCEALED UNLESS OTHERWISE INDICATED.
C. COORDINATE ALL WORK WITH OTHER TRADES PRIOR TO BEGINNING WORK.
D. ALL SANITARY PIPING SHALL SLOPE AT MINIMUM 1%.
E. ALL STORM PIPING SHALL SLOPE AT MINIMUM 2% UNLESS OTHERWISE NOTED.
F. PROVIDE LINK SEAL SEALING SLEEVES AT ALL LOCATIONS WHERE PIPING PENETRATES EXTERIOR WALLS AND FLOOR SLABS ON GRADE.

DRAWING NOTES:

1. 2" VENT UP
2. 3" VENT UP
3. 3" SAN UP TO WATER CLOSET
4. 2" SAN UP TO SINK/LAV
5. 2" SAN UP, 2" P-TRAP TO SHOWER DRAIN ABOVE
6. 2" SHOWER DRAIN VENT UP
7. 4" SAN UP
8. 3" SAN UP
9. 2" SAN UP
10. 4" SAN UP TO FLOOR CLEANOUT (DPCO)
11. 4"x 2" WYE, 2"x 3/4"IPS BUSHING ON BRANCH. INSTALL WYE BRANCH AT 45° ANGLE OR GREATER. CONNECT 3/4" CW SUPPLY TO BRANCH. TO BE UTILIZED FOR FUTURE DRAIN LINE FLUSHING
12. 3/4" CW UP, SEE DRAWING P202
13. 6"SAN DROP AT FOUNDATION WALL AND FLOOR ELEVATION CHANGE. REFER TO INVERT ELEVATIONS FOR BOTTOM PIPE DIMENSIONS BELOW FINISHED FLOORS
14. LINT INTERCEPTOR (LT-1) INSTALL TOP COVER FLUSH WITH BASEMENT FINISHED FLOOR. REFER TO MANUFACTURER EQUIPMENT DIMENSIONS FOR INLET AND OUTLET INVERT ELEVATIONS (IE) DESIGN BASIS: ZURN MODEL NO. Z1185, SIZED FOR 7 WASHING MACHINES. 3" INLET 6-1/4" 3" OUTLET 20" BELOW TOP OF UNIT (BOTTOM OF PIPE DIMENSIONS)
15. 2" VENT RISE OFF TOP OF 3" LT-1 OUTLET PIPE. PIPE 2" VENT BELOW FINISHED FLOOR TO INDICATED RISER LOCATION IN WALL.
16. 3"x 4" COUPLING/INCREASER AFTER VENT CONNECTION.
17. 3"x 4" INCREASER
18. 4" SAN, 4" P-TRAP UP TO FLOOR DRAIN PROVIDE 2" VENT OFF TOP OF PIPE AS SHOWN
19. 6" SAN, 6" P-TRAP UP TO FLOOR DRAIN PROVIDE 3" VENT OFF TOP OF PIPE AS SHOWN
20. 3" SAN UP, KITCHEN GREASE TRAP OUTLET MAIN
21. 4" FIRE PROTECTION WATER MAIN UP
22. 4" DOMESTIC WATER MAIN UP
23. 3" WASHING MACHINE/LAUNDRY DRAIN RISER UP SEE DWGS. P101, P102, AND P103.
24. ELEVATOR SUMP PUMP (PP-2). INSTALL IN ELEVATOR SHAFT SUMP PIT. 2" PUMP DISCHARGE UP. SEE DETAIL DWG. PXXX
25. INCREASE SANITARY MAIN TO 6" AT THIS POINT. 4"x 6" COUPLING

ME ENGINEERING
Mechanical/Electrical Engineering Consultants
M/E Project #: 203095
Schenectady | Rochester | Syracuse | Buffalo
433 STATE STREET, SUITE 410
SCHENECTADY, NY 12305
518.533.2171
www.meengineering.com

DATE: 5/12/2021
REVISED:

PROJECT NO: 203095
DESIGNED BY: JME
DRAWN BY: JME
CHECKED BY: RSA
SCALE: AS NOTED
NOTES:

BELOW FLOOR SANITARY AND VENT PLUMBING PLAN

HARRIS A. SANDERS ARCHITECTS, P.C.
252 WASHINGTON AVENUE, ALBANY, NEW YORK 12210

L'DOR ADULT CARE FACILITY
156 WEST CLARKSTOWN ROAD
NEW CITY N.Y. 10956

STATE OF NEW YORK · MICHAEL K. SULLIVAN · 077887-1 · LICENSED PROFESSIONAL ENGINEER

SHEET NO.
P100

PERMIT SET 05-12-21

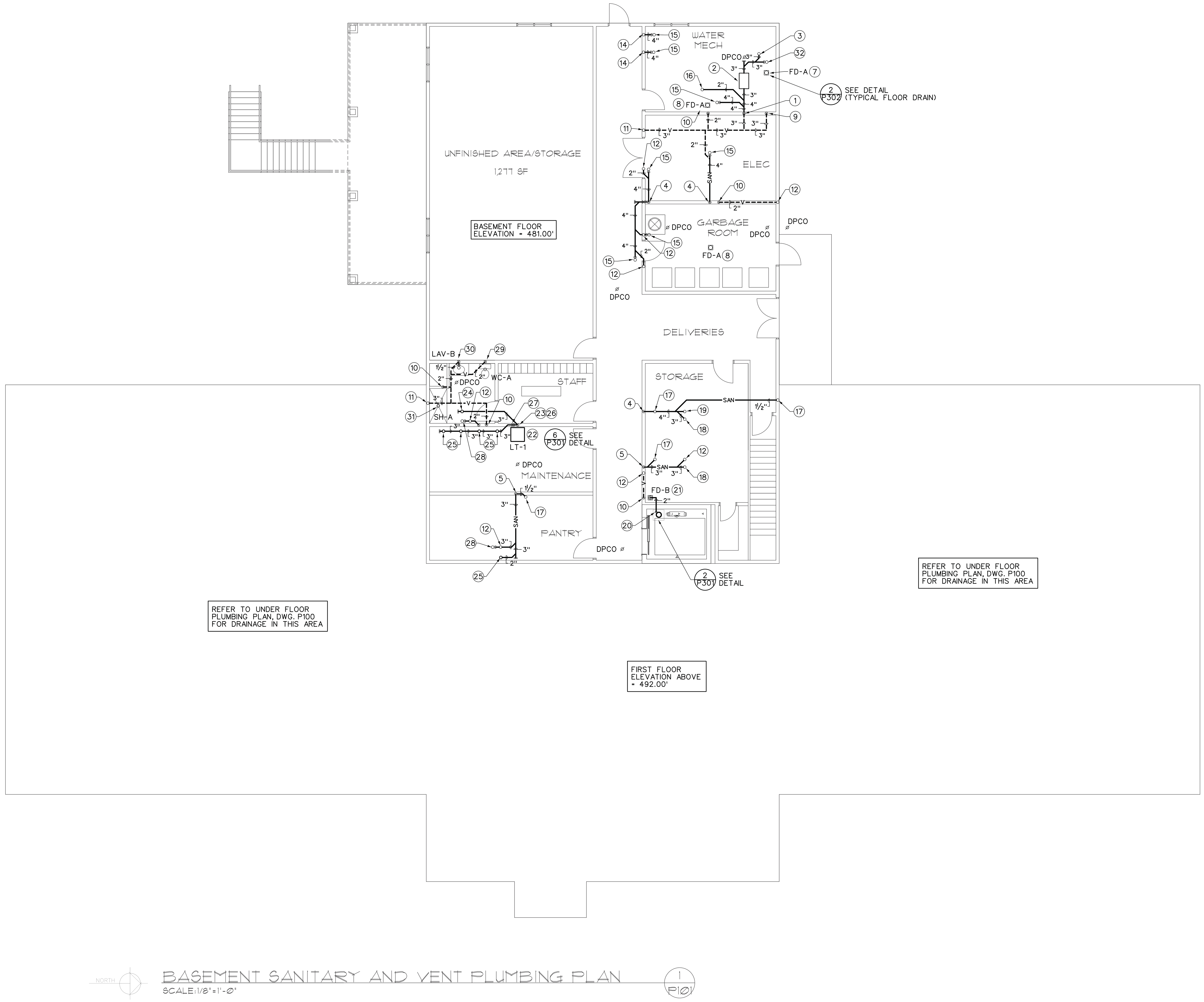

BASEMENT SANITARY AND VENT PLUMBING PLAN
SCALE:1/8"=1'-0"

GENERAL NOTES:

A. ALL PIPING IS ABOVE THE CEILING UNLESS OTHERWISE INDICATED.
B. ALL PIPING SHALL BE INSTALLED CONCEALED UNLESS OTHERWISE INDICATED.
C. COORDINATE ALL WORK WITH OTHER TRADES PRIOR TO BEGINNING WORK.
D. ALL SANITARY PIPING SHALL SLOPE AT MINIMUM 1%.
E. ALL STORM PIPING SHALL SLOPE AT MINIMUM 2% UNLESS OTHERWISE NOTED.
F. PROVIDE LINK SEAL SEALING SLEEVES AT ALL LOCATIONS WHERE PIPING PENETRATES EXTERIOR WALLS AND FLOOR SLABS ON GRADE.

DRAWING NOTES:

1. 4" SAN DOWN, 3" VENT RISE
2. GREASE TRAP (GT-A), RECESSED IN CEILING/FLOOR ABOVE. SEE DWG. P102
3. 3" VENT UP, GREASE TRAP VENTING
4. 4" SAN DOWN
5. 3" SAN DOWN
6. 2" SAN DOWN
7. 6" FLOOR DRAIN, 6" P-TRAP
8. 4" FLOOR DRAIN, 4" P-TRAP
9. 3" VENT DOWN, 3" VENT RISE
10. 2" VENT DOWN, 2" VENT RISE
11. 3" VENT UP
12. 2" VENT UP
13. 2" SAN DOWN, 2" SAN UP
14. 4" SAN DOWN, 2" VENT RISE
15. 4" SAN UP, 4" P-TRAP TO FLOOR SINK OR FLOOR DRAIN
16. 2" SAN UP TO HAND WASH SINK
17. 1-1/2" SAN UP
18. 3" SAN UP TO WATER CLOSET
19. 4" SAN UP
20. 2" PUMP DISCHARGE DROP TO ELEVATOR SUMP PUMP. 2" PUMP DISCHARGE RISE, PIPE INDIRECT OVER FLOOR DRAIN FUNNEL (FD-B) PROVIDE 2" BALL VALVE, 2" CHECK VALVE IN VERTICAL RISER.
21. 4" FLOOR DRAIN, 4" P-TRAP. PROVIDE FUNNEL ASSEMBLY TO RECEIVE INDIRECT WASTE/SUMP PUMP DISCHARGE TERMINATION
22. LINT TRAP/INTERCEPTOR RECESSED IN FLOOR SEE DWG. P100 FOR INLET AND OUTLET DRAINAGE.
23. WASHING MACHINE WASTE MAIN. 3" DOWN
24. 3" WASHING MACHINE DRAIN RISER UP, SEE DWG. P102
25. 2" DRAIN UP TO WASHING MACHINE DRAIN AND SUPPLY BOX
26. 3" DRAIN LINE DOWN TO LINT TRAP INLET
27. 3" DRAIN, ROLL DOWN TO 3" DRAIN RISER
28. 3" SAN, 3" P-TRAP UP TO MOP SINK
29. 3" SAN, 2" VENT AT WATER CLOSET
30. 2" SAN DOWN, 1-1/2" VENT RISE AT LAV
31. 2" SAN DOWN, 2" P-TRAP BELOW FLOOR 2" VENT AT SHOWER DRAIN
32. 3" GREASE WASTE (GW), 3"P-TRAP UP TO FLOOR SINK BELOW 3-BAY SINK

ME ENGINEERING
Mechanical/Electrical Engineering Consultants

HARRIS A. SANDERS ARCHITECTS, P.C.
252 WASHINGTON AVENUE, ALBANY, NEW YORK 12210

DATE: 5/12/2021
REVISED:

PROJECT NO.: 203095
DESIGNED BY: JWE
DRAWN BY: JWE
CHECKED BY: RSA
SCALE: AS NOTED
NOTES:

BASEMENT SANITARY AND VENT PLUMBING PLAN

L'DOR ADULT CARE FACILITY
156 WEST CLARKSTOWN ROAD
NEW CITY N.Y. 10956

SHEET NO.: P101

PERMIT SET 05-12-21

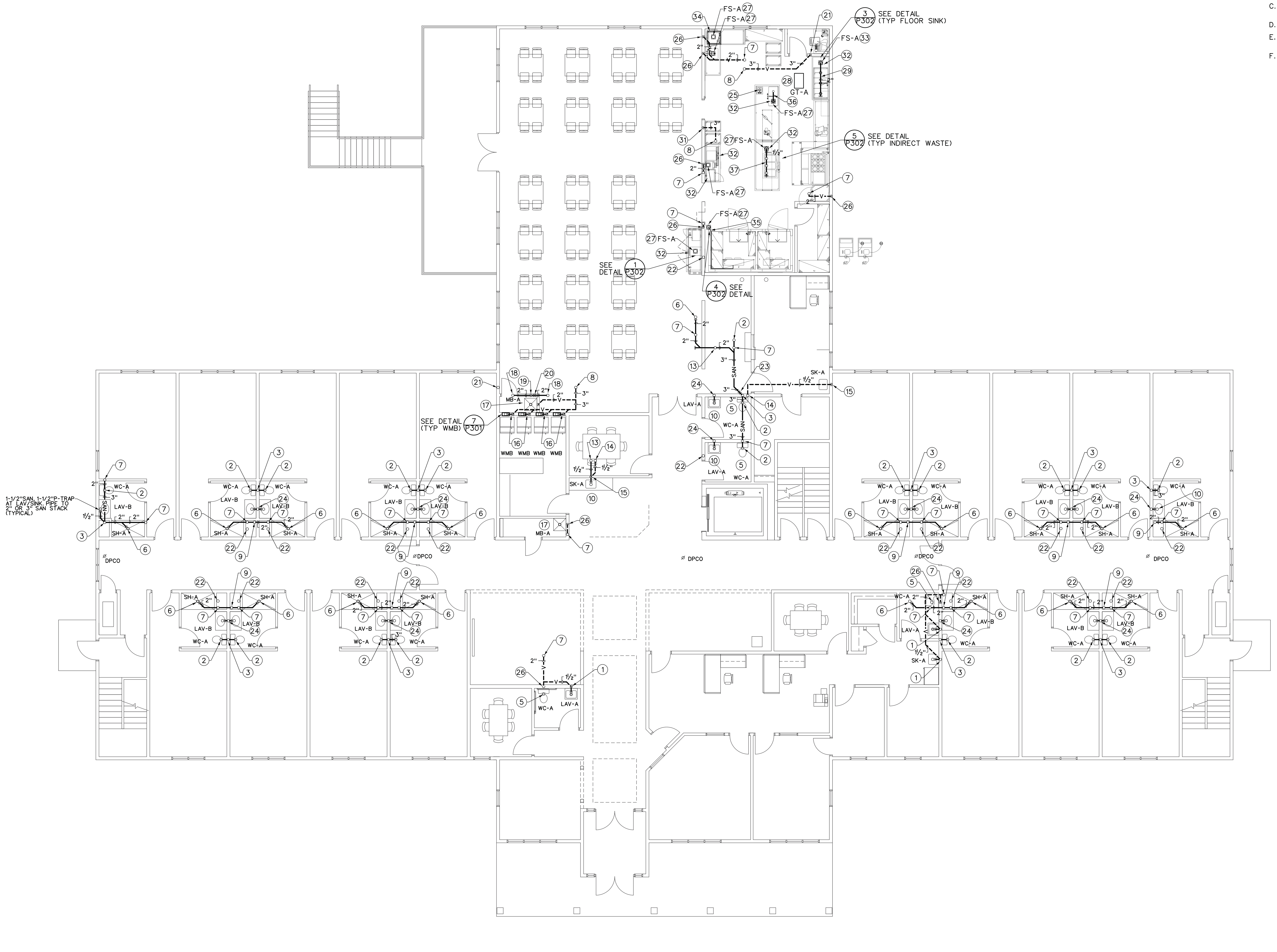

FIRST FLOOR SANITARY AND VENT PLUMBING PLAN 1 P102

SCALE:1/8"=1'-0"

GENERAL NOTES:

A. ALL PIPING IS ABOVE THE CEILING UNLESS OTHERWISE INDICATED.

B. ALL PIPING SHALL BE INSTALLED CONCEALED UNLESS OTHERWISE INDICATED.

C. COORDINATE ALL WORK WITH OTHER TRADES PRIOR TO BEGINNING WORK.

D. ALL SANITARY PIPING SHALL SLOPE AT MINIMUM 1%.

E. ALL STORM PIPING SHALL SLOPE AT MINIMUM 2% UNLESS OTHERWISE NOTED.

F. PROVIDE LINK SEAL SEALING SLEEVES AT ALL LOCATIONS WHERE PIPING PENETRATES EXTERIOR WALLS AND FLOOR SLABS ON GRADE.

DRAWING NOTES:

1. 2" SAN DOWN, 1-1/2" VENT RISE
2. 3" SAN UP TO WATER CLOSET
3. 3" SAN UP, 3" SAN DOWN
4. 2" SAN DOWN, 2" VENT UP
5. 3" SAN DOWN AT WATER CLOSET
6. 2" SAN UP, 2" P-TRAP TO SHOWER DRAIN AT SECOND FLOOR
7. 2" VENT UP
8. 3" VENT UP
9. 2" SAN DOWN, 2" SAN UP. SHOWER DRAIN STACK
10. LAV / SINK: 1-1/2" P-TRAP 1-1/2" SAN TO 2" WASTE STACK
11. 3" SAN DOWN, 3" P-TRAP BELOW FLOOR 2" VENT RISE AT MOP SINK
12. 2" SAN DOWN, 1-1/2" VENT RISE
13. 1-1/2" SAN UP TO SINK/LAV
14. 1-1/2" VENT UP
15. 1-1/2" SAN DOWN, 1-1/2" VENT RISE
16. 2" SAN DOWN, 2" P-TRAP IN WALL, 1-1/2" VENT RISE AT WASHING MACHINE DRAIN/SUPPLY BOX (DSB-A RECESSED IN WALL)
17. 3" SAN DOWN, 3" P-TRAP BELOW FLOOR, 2" VENT RISE AT MOP SINK
18. 2" SAN UP
19. 3" SAN (WASHING MACHINE DRAIN LINE) DOWN
20. ROLL 2" DRAIN INTO VERTICAL 3" DRAIN RISER
21. 3" VENT UP, 3" VENT DOWN
22. 2" VENT UP, 2" VENT DOWN
23. 3" SAN, ROLL DOWN INTO 3" VERTICAL SAN STACK
24. 2" SAN DOWN, 2" SAN UP
25. 1-1/2" SAN DOWN, 1-1/2" VENT RISE. PROVIDE AIR ADMITTANCE VALVE ON VENT RISER.
26. 2" VENT DOWN, 2" VENT RISE
27. 4" FLOOR SINK (FS-A), 4" P-TRAP BELOW FLOOR
28. GREASE TRAP (GT-A) RECESSED IN FLOOR COVER FLUSH WITH FINISHED FLOOR
29. 2" DRAIN HEADER BELOW 3-BAY SINK. 2" DRAIN RISERS AT EACH SINK BOWL.
30. 3" GREASE WASTE DOWN, 2" VENT RISE. OFFSET 2" VENT TO WALL. CONNECT 2" DRAIN HEADER TO 3" GREASE WASTE RISER.
31. 3" VENT DOWN, 3" VENT RISE. OFFSET AS REQUIRED TO RUN UP THRU SECOND FLOOR PARTITION.

ALL KITCHEN EQUIPMENT REQUIRING DRAINS ARE TO BE RUN INDIRECT OVER THE NEAREST FLOOR SINK (FS-A). VERIFY IN FIELD DRAIN PIPE/TUBING SIZES WITH KITCHEN EQUIPMENT SUPPLIER.

33. 3" FLOOR SINK (FS-A), 3" P-TRAP BELOW FLOOR
34. 2" DRAIN CONNECTION AT DISHWASHER, DWV COPPER ONLY, PVC DRAIN NOT ACCEPTABLE. COORDINATE WITH KITCHEN EQUIPMENT SUPPLIER FOR DRAIN FITTING SIZES. PIPE DISHWASHER WASTE LINE INDIRECT OVER FLOOR SINK (FS-A), WITH AIR GAP
35. 1" AND 3/4" CONDENSATE DRAIN LINES FROM FREEZER AND COOLER CONDENSERS. PIPE INDIRECT OVER FLOOR AS REQUIRED
36. 1-1/2" DRAIN HEADER AT 2-BAY PREP SINK. PIPE INDIRECT OVER FLOOR SINK (FS-A)
37. 1-1/2" DRAIN HEADER BELOW HOT FOOD WELL EQUIP. PROVIDE DRAIN RISERS TO EACH WELL DRAIN CONNECTION. COORDINATE DRAIN RISER SIZE WITH KITCHEN EQUIPMENT SUPPLIER. PIPE DRAIN HEADER INDIRECT OVER FLOOR SINK (FS-A)

ENGINEERING
Mechanical/Electrical Engineering Consultants
M/E Project #: 203095
Schenectady | Rochester | Syracuse | Buffalo
433 STATE STREET, SUITE 410
SCHENECTADY, NY 12305
518.533.2171
www.meengineering.com

DATE: 5/12/2021
REVISED:

PROJECT NO: 203095
DESIGNED BY: JME
DRAWN BY: JME
CHECKED BY: RSA
SCALE: AS NOTED
NOTES:

FIRST FLOOR SANITARY AND VENT PLUMBING PLAN

HARRIS A. SANDERS ARCHITECTS, P.C.
252 WASHINGTON AVENUE, ALBANY, NEW YORK 12210

L'DOR ADULT CARE FACILITY
156 WEST CLARKSTOWN ROAD
NEW CITY N.Y. 10956

SHEET NO.

P102

OF:

PERMIT SET 05-12-21

GENERAL NOTES:

A. ALL PIPING IS ABOVE THE CEILING UNLESS OTHERWISE INDICATED.
B. ALL PIPING SHALL BE INSTALLED CONCEALED UNLESS OTHERWISE INDICATED.
C. COORDINATE ALL WORK WITH OTHER TRADES PRIOR TO BEGINNING WORK.
D. ALL SANITARY PIPING SHALL SLOPE AT MINIMUM 1%.
E. ALL STORM PIPING SHALL SLOPE AT MINIMUM 2% UNLESS OTHERWISE NOTED.
F. PROVIDE LINK SEAL SEALING SLEEVES AT ALL LOCATIONS WHERE PIPING PENETRATES EXTERIOR WALLS AND FLOOR SLABS ON GRADE.

DRAWING NOTES:

1. 3" SAN DOWN AT FLOOR MOUNTED WATER CLOSET.
2. 1-1/2" SAN, 1-1/2" P-TRAP AT LAV
3. 2" SAN DOWN TO 2" P-TRAP AT SHOWER DRAIN
4. 2" SAN DOWN, 1-1/2" VENT RISE AT SINK
5. 4" VENT UP TO 4" VENT THRU ROOF. SEE ROOF PLUMBING PLAN, P104, FOR CONTINUATION
6. 3" SAN DOWN, 2" VENT RISE
7. 3" VENT DOWN, 3" VENT RISE
8. 2" VENT DOWN, 2" VENT RISE
9. 3" SAN DOWN, 3" VENT RISE
10. 2" SAN DOWN, 2" VENT RISE
11. WASHING MACHINE DRAIN/SUPPLY BOX (WMB) RECESSED IN WALL. 2" P-TRAP MOUNTED 48" BELOW WMB. 2" STANDPIPE UP TO WMB CONNECTION. SEE DETAIL ON DRAWING P301.
12. 1-1/2" VENT DOWN, 1-1/2" VENT RISE

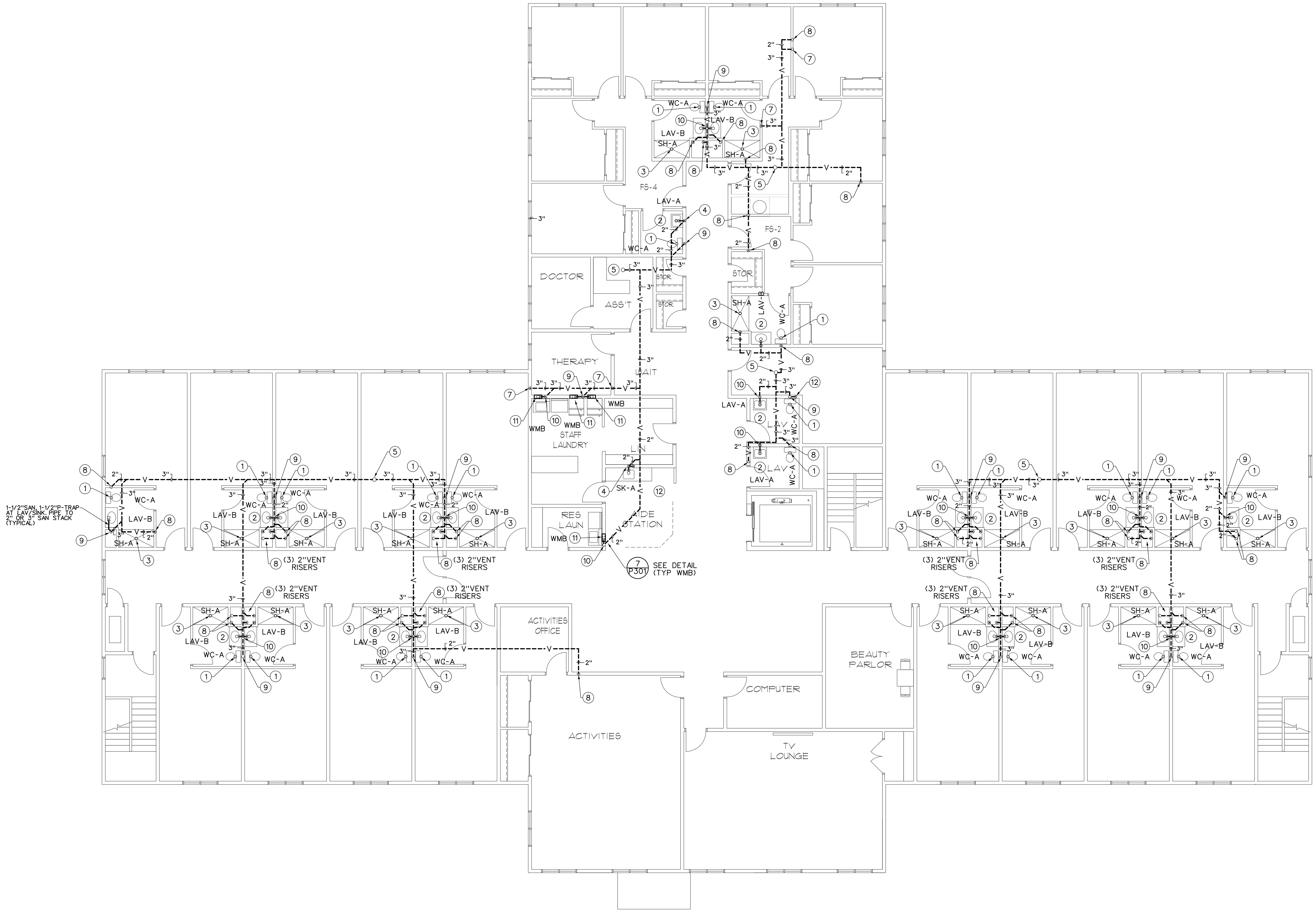

SECOND FLOOR SANITARY AND VENT PLUMBING PLAN 1/P103
SCALE: 1/8"=1'-0"

HARRIS A. SANDERS ARCHITECTS, P.C.
252 WASHINGTON AVENUE, ALBANY, NEW YORK 12210

L'DOR ADULT CARE FACILITY
156 WEST CLARKSTOWN ROAD
NEW CITY N.Y. 10956

SECOND FLOOR SANITARY AND VENT PLUMBING PLAN

PROJECT NO.	203095
DESIGNED BY:	JWE
DRAWN BY:	JWE
CHECKED BY:	RSA
SCALE:	AS NOTED
NOTES:	

DATE: 5/12/2021
REVISED:

ME ENGINEERING
Mechanical/Electrical Engineering Consultants

SHEET NO.
P103

PERMIT SET 05-12-21

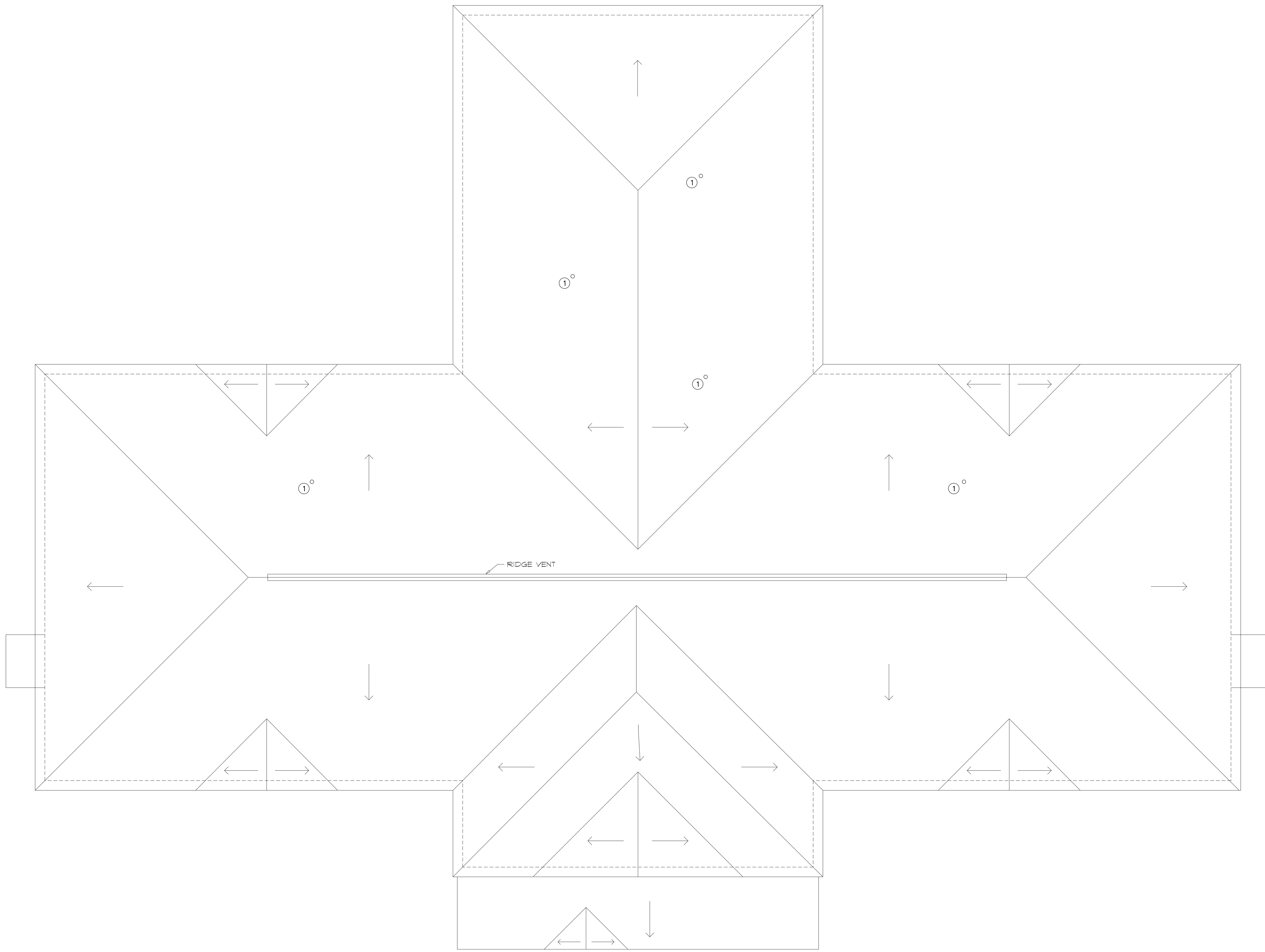

ROOF PLAN
SCALE: 1/8"=1'-0"
1
P104

GENERAL NOTES:

A. ALL PIPING IS ABOVE THE CEILING UNLESS OTHERWISE INDICATED.
B. ALL PIPING SHALL BE INSTALLED CONCEALED UNLESS OTHERWISE INDICATED.
C. COORDINATE ALL WORK WITH OTHER TRADES PRIOR TO BEGINNING WORK.
D. ALL SANITARY PIPING SHALL SLOPE AT MINIMUM 1%.
E. ALL STORM PIPING SHALL SLOPE AT MINIMUM 2% UNLESS OTHERWISE NOTED.
F. PROVIDE LINK SEAL SEALING SLEEVES AT ALL LOCATIONS WHERE PIPING PENETRATES EXTERIOR WALLS AND FLOOR SLABS ON GRADE.

DRAWING NOTES:

(1) 4" VENT RISE. TERMINATE MINIMUM 18" ABOVE ROOF LINE. 4" VENT DOWN. REFER TO DWG. P103 FOR CONTINUATION

ME ENGINEERING
Mechanical/Electrical Engineering Consultants

DATE: 5/12/2021
REVISED:

PROJECT NO: 203095
DESIGNED BY: JWE
DRAWN BY: JWE
CHECKED BY: RSA
SCALE: AS NOTED
NOTES:

ROOF PLUMBING PLAN

HARRIS A. SANDERS ARCHITECTS, P.C.
252 WASHINGTON AVENUE, ALBANY, NEW YORK 12210

L'DOR ADULT CARE FACILITY
156 WEST CLARKSTOWN ROAD
NEW CITY N.Y. 10956

STATE OF NEW YORK
MICHAEL A. SULLIVAN
077887-1
LICENSED PROFESSIONAL ENGINEER

SHEET NO.
P104

PERMIT SET 05-12-21

GENERAL NOTES:

A. ALL PIPING IS ABOVE THE CEILING UNLESS OTHERWISE INDICATED.

B. ALL PIPING SHALL BE INSTALLED CONCEALED UNLESS OTHERWISE INDICATED.

C. COORDINATE ALL WORK WITH OTHER TRADES PRIOR TO BEGINNING WORK.

D. ALL SANITARY PIPING SHALL SLOPE AT MINIMUM 1%.

E. ALL STORM PIPING SHALL SLOPE AT MINIMUM 2% UNLESS OTHERWISE NOTED.

F. PROVIDE LINK SEAL SEALING SLEEVES AT ALL LOCATIONS WHERE PIPING PENETRATES EXTERIOR WALLS AND FLOOR SLABS ON GRADE.

NATURAL GAS PIPING WORK, SHOWN ON PLANS, IS PRELIMINARY. FINAL GAS LOADS AND EQUIPMENT WILL BE REQUIRED TO BE COORDINATED PRIOR TO COMPLETION OF GAS PIPE INSTALLATIONS

DRAWING NOTES:

1. 4" WATER SERVICE DOWN, 4" WATER SERVICE RISE. PROVIDE 4"OS&Y VALVE, DRAIN VALVE, AND PRESSURE GAUGE IN VERTICAL
2. 4" FIRE PROTECTION WATER SERVICE RISER FIRE PROTECTION BY SPRINKLER CONTRACTOR
3. DOMESTIC HOT WATER SYSTEM, SEE LARGE SCALE PLAN 2/P201 THIS SHEET. SEE ELEVATION PIPING DETAIL DWG. P601
4. 2-1/2" CW SUPPLY TO DOMESTIC HOT WATER SYSTEM
5. 1-1/2" GAS SUPPLY TO WATER HEATERS
6. 1-1/2" GAS SUPPLY HEADER/DROP TO WATER HEATERS
7. 1" 140° HW FROM WATER HEATERS
8. 2" HW, 1" HWR, SEE WATER HEATER DETAIL P601 FOR CONTINUATION
9. 4" GAS RISE INSIDE WALL, 4" GAS VALVE IN VERTICAL PROVIDE 6" PIPE SLEEVE THRU WALL
10. GAS METER, PROJECTED GAS DEMAND 2500 CFH
11. 3/4" 140° HW, 3/4" CW UP TO DISHWASHER
12. 3/4" 140° HW, 3/4" CW UP TO KITCHEN FAUCET
13. 1/2" CW, 1/2" HW UP TO HANDWASH SINK
14. 1/2" CW UP TO ICE MACHINE
15. 1/2" CW, 1/2" HW DROP TO LAV
16. 1/2" CW DROP TO WATER CLOSET
17. 1/2" CW, 1/2" HW DROP TO SHOWER VALVE
18. 3" CW, 2" HW, 1" HWR UP. SEE DWG P202 FOR CONTINUATION. PROVIDE VALVES IN RISERS OR ADJACENT TO ELBOW UP
19. 3/4" CW, 3.4" HW DROPS TO WALL HYDRANTS
20. PROVIDE CW AND HW WALL HYDRANTS 36" ABOVE FINISHED FLOOR
21. 3/4" CW DROP TO NON FREEZE TYPE EXTERIOR WALL HYDRANT (NFWH). INSTALL NFWH 24" ABOVE GRADE
22. 1/2" CW, 1/2"140° HW UP TO PREP SINK
23. 1" GAS UP TO RANGE
24. 1" GAS DROP TO FURNACE. 1" GAS VALVE 1" UNION AND DRIP LEG
25. 3/4" GAS DROP, 3/4" GAS VALVE, 3/4" UNION AND DRIP LEG TO MAU
26. 1/2" CW, HW UP TO POT FILLER FAUCET
27. 3" CAPPED GAS LEG WITH 3" GAS VALVE. FUTURE EMERGENCY GENERATOR CONNECTION
28. 1/2" GAS UP TO OUTDOOR EQUIPMENT
29. 1/2" CW UP TO HOT WELL EQUIPMENT
30. 1/2" CW UP TO COFFEE BREWING EQUIPMENT
31. 4" PVC INTAKE, 4" PVC EXHAUST FROM WATER HEATER
32. 4" PVC TERMINATION KIT THRU WALL. PROVIDE COMBINATION INTAKE AND EXHAUST FITTING PER WATER HEATER MANUFATURER REQUIREMENTS

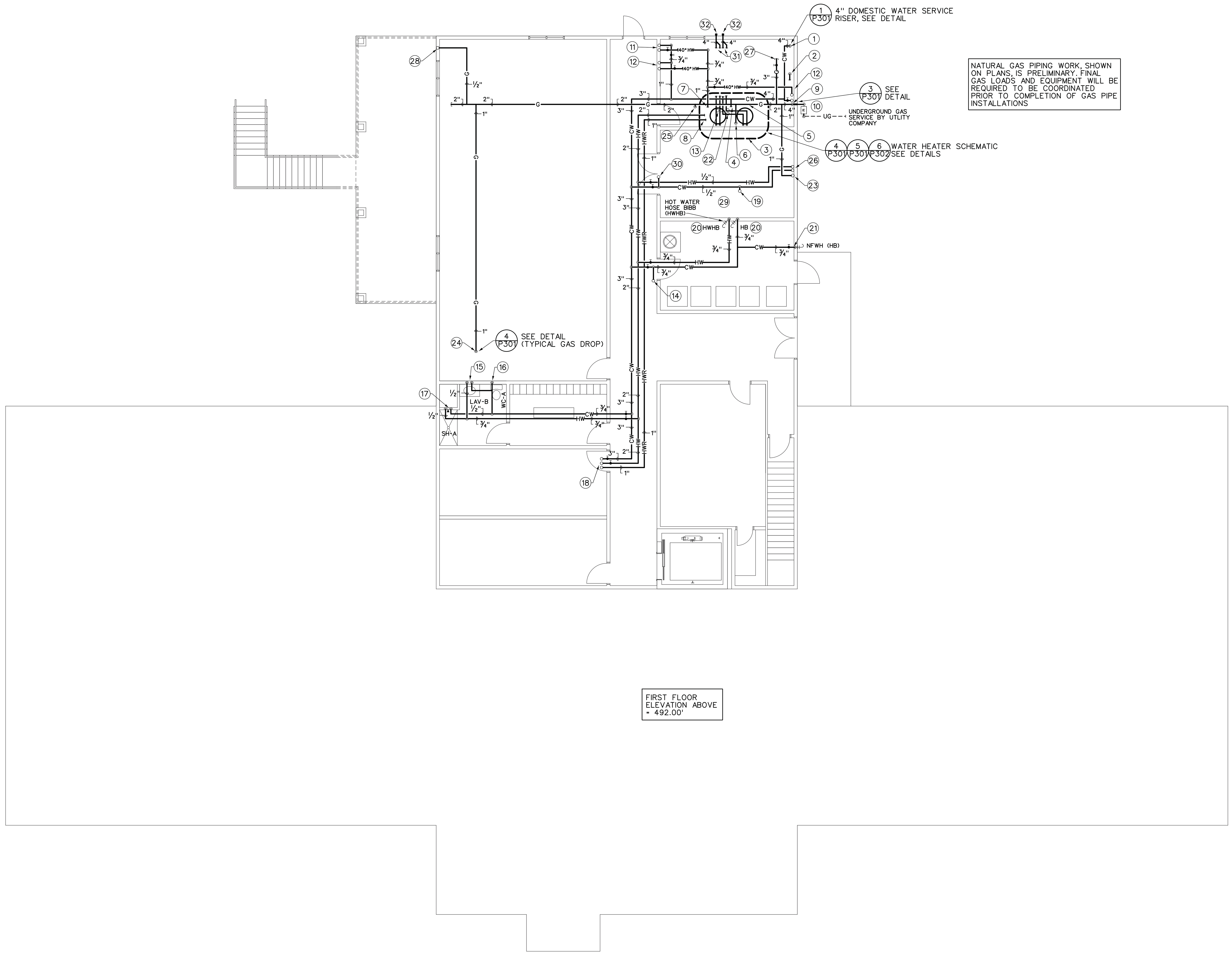

BASEMENT DOMESTIC WATER AND GAS PLUMBING PLAN 1/P201
SCALE: 1/8" = 1'-0"

ME ENGINEERING
Mechanical/Electrical Engineering Consultants

DATE: 5/12/2021
REVISED:
PROJECT NO.: 203095
DESIGNED BY: JMC
DRAWN BY: JMC
CHECKED BY: RSA
SCALE: AS NOTED
NOTES:

BASEMENT DOMESTIC WATER AND GAS PLUMBING PLAN

HARRIS A. SANDERS ARCHITECTS, P.C.
252 WASHINGTON AVENUE, ALBANY, NEW YORK 12210

L'DOR ADULT CARE FACILITY
156 WEST CLARKSTOWN ROAD
NEW CITY N.Y. 10956

SHEET NO.: P201

PERMIT SET 05-12-21

GENERAL NOTES:

A. ALL PIPING IS ABOVE THE CEILING UNLESS OTHERWISE INDICATED.
B. ALL PIPING SHALL BE INSTALLED CONCEALED UNLESS OTHERWISE INDICATED.
C. COORDINATE ALL WORK WITH OTHER TRADES PRIOR TO BEGINNING WORK.
D. ALL SANITARY PIPING SHALL SLOPE AT MINIMUM 1%.
E. ALL STORM PIPING SHALL SLOPE AT MINIMUM 2% UNLESS OTHERWISE NOTED.
F. PROVIDE LINK SEAL SEALING SLEEVES AT ALL LOCATIONS WHERE PIPING PENETRATES EXTERIOR WALLS AND FLOOR SLABS ON GRADE.

KITCHEN EQUIPMENT SUPPLIED BY OWNERS VENDOR. PLUMBING CONTRACTOR (PC) WILL BE REQUIRED TO MAKE ALL FINAL CONNECTIONS TO EQUIPMENT REQUIRING PLUMBING UTILITIES, INCLUDING, BUT NOT LIMITED TO, DRAINS, DRAIN TUBING, INDIRECT WASTE, COLD WATER, HOT WATER, AND GAS REQUIREMENTS. VALVES, FITTINGS, PIPE MATERIALS WILL BE BY PC.

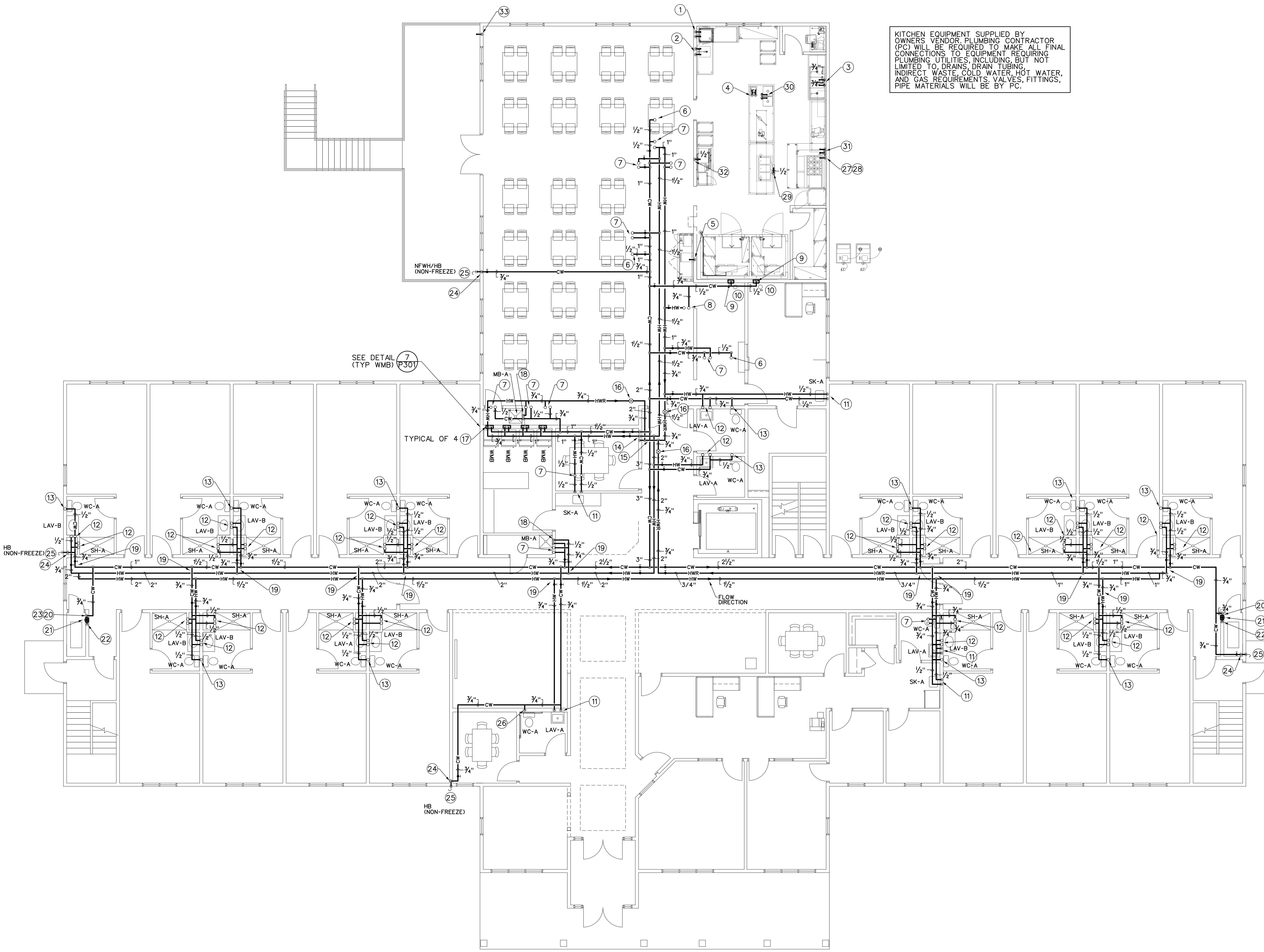

FIRST FLOOR DOMESTIC WATER AND GAS PLUMBING PLAN (1 / P202)
SCALE:1/8"=1'-0"

DRAWING NOTES:

1. 3/4" CW, 3/4" 140°HW DOWN 3/4" CW, 3/4" 140°HW RISE DISHWASHER CONNECTION
2. 3/4" CW, 3/4" 140°HW DOWN 3/4" CW, 3/4" 140°HW RISE
3. 3/4" CW, 3/4" 140°HW DOWN 3/4" CW, 3/4" 140°HW RISE 3-BAY SINK FAUCET CONNECTIONS PROVIDE BALL VALVES ON RISERS
4. 1/2" CW, 1/2" HW DOWN, 1/2" CW, 1/2" HW RISE TO HANDSINK
5. 1/2" CW DOWN, 1/2" CW RISE, 1/2" IN-LINE BACKFLOW DEVICE AT ICE MACHINE CONNECTION
6. 1/2" CW UP
7. 1/2" CW, 1/2" HW UP
8. 3/4" CW, 3/4" HW UP
9. 1/2" CW DROP TO RECESSED VALVE BOX. PROVIDE TUBING CONNECTIONS TO WATER COOLER EQUIPMENT
10. RECESSED VALVE BOX, 1/2" QUARTER TURN BALL VALVE MOUNTED TO WALL BOX ASSEMBLY
11. 1/2" CW, 1/2" HW DROP
12. 1/2" CW, 1/2" HW UP TO SECOND FLOOR 1/2" CW, 1/2" HW DROP TO FIXTURE
13. 1/2" CW UP TO SECOND FLOOR 1/2" CW DROP TO WATER CLOSET
14. MAIN DOMESTIC WATER RISER ASSEMBLY 3" CW RISE, 3" CW DOWN, 2" HW RISE, 2" HW DOWN, 1" HWR RISE, 1" HWR DOWN. SEE BASEMENT PLAN P201 FOR CONTINUATION OF MAIN RISERS
15. 1" HWR AND 3/4" HWR DROPS TO 1" HWR HEADER.
16. THERMOSTATIC TYPE BALANCING VALVE (TB-1) PROVIDE PIPE CONNECTIONS PER PIPE SIZES SHOWN FLOOR PLAN.
17. RECESSED WASHING MACHINE DRAIN/SUPPLY BOX (WSB). 1/2" CW, 1/2" HW DROP TO WSB. QUARTER TURN BALL VALVES MOUNTED IN BOX ASSEMBLY. GARDEN HOSE TYPE CONNECTIONS TO ACCEPT WASHING MACHINE CW, HW HOSES.
18. 1/2" CW, 1/2" HW DROP TO MOP SINK FAUCET
19. 3/4" CW, 3/4" HW BRANCH LINES TO APARTMENT BATHROOMS ON FIRST AND SECOND FLOORS. PROVIDE 3/4" BALL VALVES ON EACH BRANCH LINE (TYPICAL FOR TAKEOFFS FROM DOMESTIC WATER MAINS/PIPING.
20. PROVIDE 8"x 8" ACCESS PANEL ON WALL. MOUNT 3/4" BALL VALVE IN WALL BEHIND ACCESS PANEL
21. 3/4" CW DROP TO VALVE. FLUSHING VALVE WILL BE NORMALLY CLOSED.
22. 3/4" CW DOWN TO BELOW SLAB. SEE DWG. P100 FOR CONTINUATION. 3/4" UNDERGROUND CW SUPPLY TO BE CONNECTED TO TOP OF SANITARY MAIN BELOW FLOOR.
23. 3/4" INLINE BACKFLOW PREVENTER FOR SANITARY FLUSH LINE SUPPLY. MOUNT ABOVE CEILING.
24. 3/4" CW DROP TO EXTERIOR NON FREEZE WALL HYDRANT (NFWH)
25. NFWH (HB) MOUNT ON EXTERIOR WALL AT 24" AB GRADE.
26. 1/2" CW DROP TO WATER CLOSET
27. 1" GAS DOWN, 1" GAS RISE BEHIND RANGE. PROVIDE 1" SOLENOID GAS VALVE IN RISER. COORDINATE SOLENOID VALVE ELECTRICAL INTERFACE WITH EXHAUST HOOD FIRE SUPPRESSION SYSTEM. COORDINATE WITH CAPTIVEAIRE HOOD EQUIPMENT SUPPLIER.
28. 1" GAS CONNECTION TO RANGE. PROVIDE MANUAL SHUT OFF VALVE AND SAFETY TYPE FLEX CONNECTOR ON HORIZONTAL TAKEOFF NIPPLE.

1/2" CW DOWN, 1/2" CW RISE WITH VALVE IN VERTICAL AT HOT FOOD WELL EQUIPMENT

30. 1/2" CW, 1/2" 140° HW DOWN, 1/2" CW, 1/2" 140° HW RISE AT 2-BAY PREP SINK. FINAL CONNECTION TO SINK FAUCET BY PC.
31. 1/2" CW, 1/2" 140° HW DOWN, 1/2" CW, 1/2" 140° HW RISE AT POT-FILLER FAUCET. FINAL CONNECTION TO FAUCET BY PC.
32. 1/2" CW DOWN, 1/2" CW RISE TO COFFEE BREWING EQUIPMENT. PROVIDE SHUT OFF VALVE AND FITTINGS REQUIRED FOR CONNECTION TO EQUIPMENT.
33. 1/2" GAS DOWN, 1/2" GAS RISE. 1/2" GAS OUT THRU WALL CONNECTION FOR FUTURE GAS FIRED OUTDOOR EQUIP. CAP AS REQUIRED.

ME ENGINEERING
Mechanical/Electrical Engineering Consultants
M/E Project #: 203095
Schenectady | Rochester | Syracuse | Buffalo
433 STATE STREET, SUITE 410
SCHENECTADY, NY 12305
518.533.2171
www.meengineering.com

DATE: 5/12/2021
REVISED:

PROJECT NO: 203095
DESIGNED BY: JME
DRAWN BY: JME
CHECKED BY: RSA
SCALE: AS NOTED
NOTES:

FIRST FLOOR DOMESTIC WATER AND GAS PLUMBING PLAN

HARRIS A. SANDERS ARCHITECTS, P.C.
252 WASHINGTON AVENUE, ALBANY, NEW YORK 12210

L'DOR ADULT CARE FACILITY
156 WEST CLARKSTOWN ROAD
NEW CITY N.Y. 10956

SHEET NO.
P202

PERMIT SET 05-12-21

GENERAL NOTES:

A. ALL PIPING IS ABOVE THE CEILING UNLESS OTHERWISE INDICATED.
B. ALL PIPING SHALL BE INSTALLED CONCEALED UNLESS OTHERWISE INDICATED.
C. COORDINATE ALL WORK WITH OTHER TRADES PRIOR TO BEGINNING WORK.
D. ALL SANITARY PIPING SHALL SLOPE AT MINIMUM 1%.
E. ALL STORM PIPING SHALL SLOPE AT MINIMUM 2% UNLESS OTHERWISE NOTED.
F. PROVIDE LINK SEAL SEALING SLEEVES AT ALL LOCATIONS WHERE PIPING PENETRATES EXTERIOR WALLS AND FLOOR SLABS ON GRADE.

DRAWING NOTES:

1. 1/2" CW DOWN, 1/2" CW RISE 1/2" CW AT WATER CLOSET
2. 1/2" CW DOWN, 1/2" HW DOWN, 1/2" CW RISE, 1/2" HW RISE AT LAVATORY
3. 1/2" CW DOWN, 1/2" HW DOWN, 1/2" CW RISE, 1/2" HW RISE TO SHOWER VALVE
4. 1/2" CW DOWN, 1/2" HW DOWN, 1/2" CW RISE, 1/2" HW RISE AT SINK
5. 1/2" CW DOWN, 1/2" HW DOWN, 1/2" CW RISE, 1/2" HW RISE TO WASHING MACHINE DRAIN/ SUPPLY BOX RECESSED IN WALL
6. 1/2" CW DOWN, 1/2" CW RISE AT WATER CLOSET. PROVIDE PIPING, FITTINGS AND STOPS AS REQUIRED FOR BACK TO BACK WATER CLOSET CONNECTIONS
7. 1/2" CW DOWN, 1/2" HW DOWN, 1/2" CW RISE, 1/2" HW RISE AT LAVATORY. PROVIDE PIPING, FITTINGS AND STOPS AS REQUIRED FOR BACK TO BACK LAVATORY CONNECTIONS
8. PROVIDE CW AND HW WATER RISERS AS NEEDED FOR BEAUTY SHOP PLUMBING FIXTURES REQUIRING PLUMBING AND DRAIN CONNECTIONS

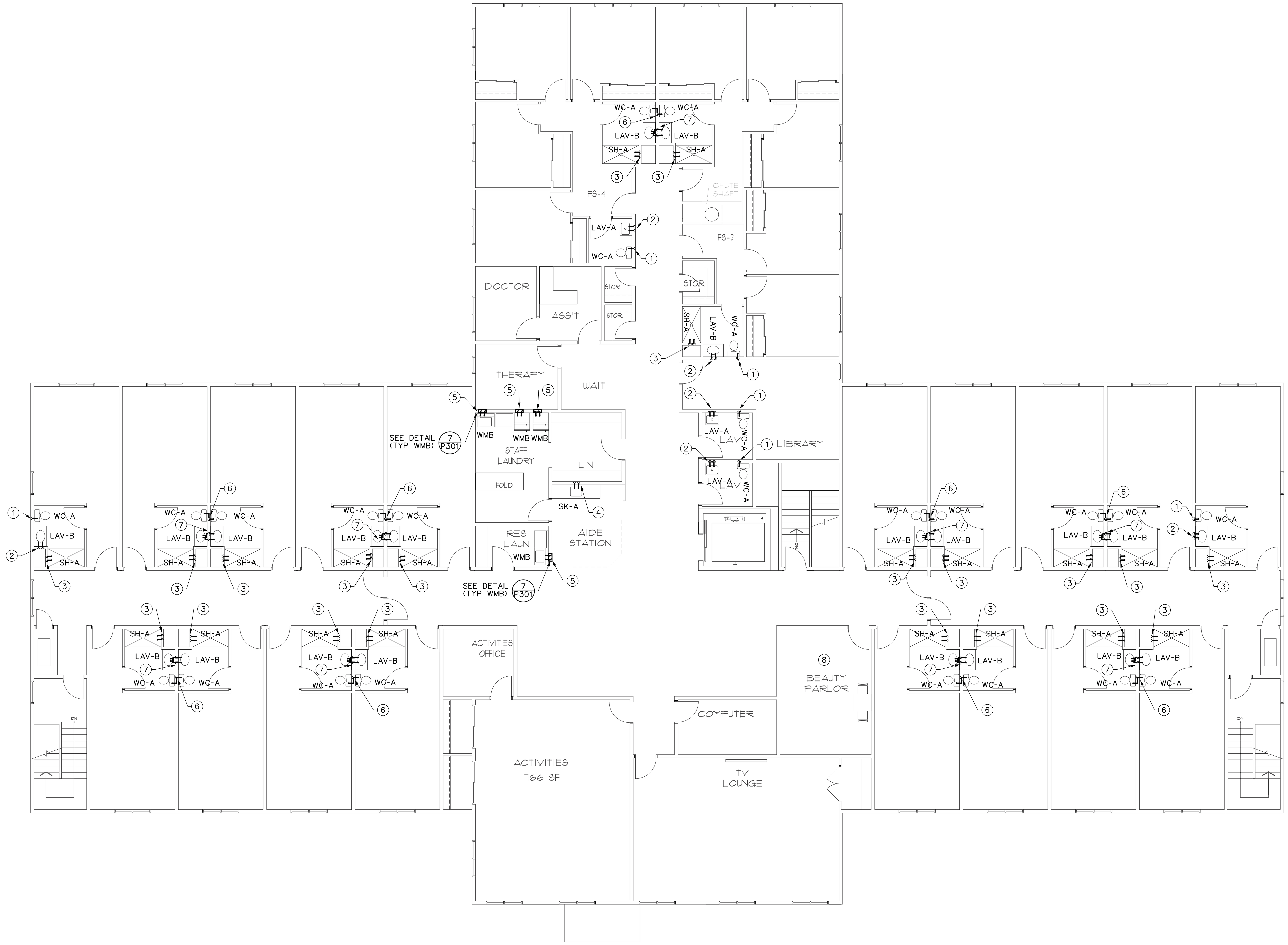

SECOND FLOOR DOMESTIC WATER AND GAS PLUMBING PLAN
SCALE: 1/8"=1'-0"
1 P203

ME ENGINEERING
Mechanical/Electrical Engineering Consultants

DATE: 5/12/2021
REVISED:
PROJECT NO.: 203095
DESIGNED BY: JWE
DRAWN BY: JWE
CHECKED BY: RSA
SCALE: AS NOTED
NOTES:

SECOND FLOOR DOMESTIC WATER AND GAS PLUMBING PLAN

HARRIS A. SANDERS ARCHITECTS, P.C.
252 WASHINGTON AVENUE, ALBANY, NEW YORK 12210

L'DOR ADULT CARE FACILITY
156 WEST CLARKSTOWN ROAD
NEW CITY N.Y. 10956

STATE OF NEW YORK · MICHAEL K. SULLIVAN · 077887-1 · LICENSED PROFESSIONAL ENGINEER

SHEET NO.
P203

PERMIT SET 05-12-21

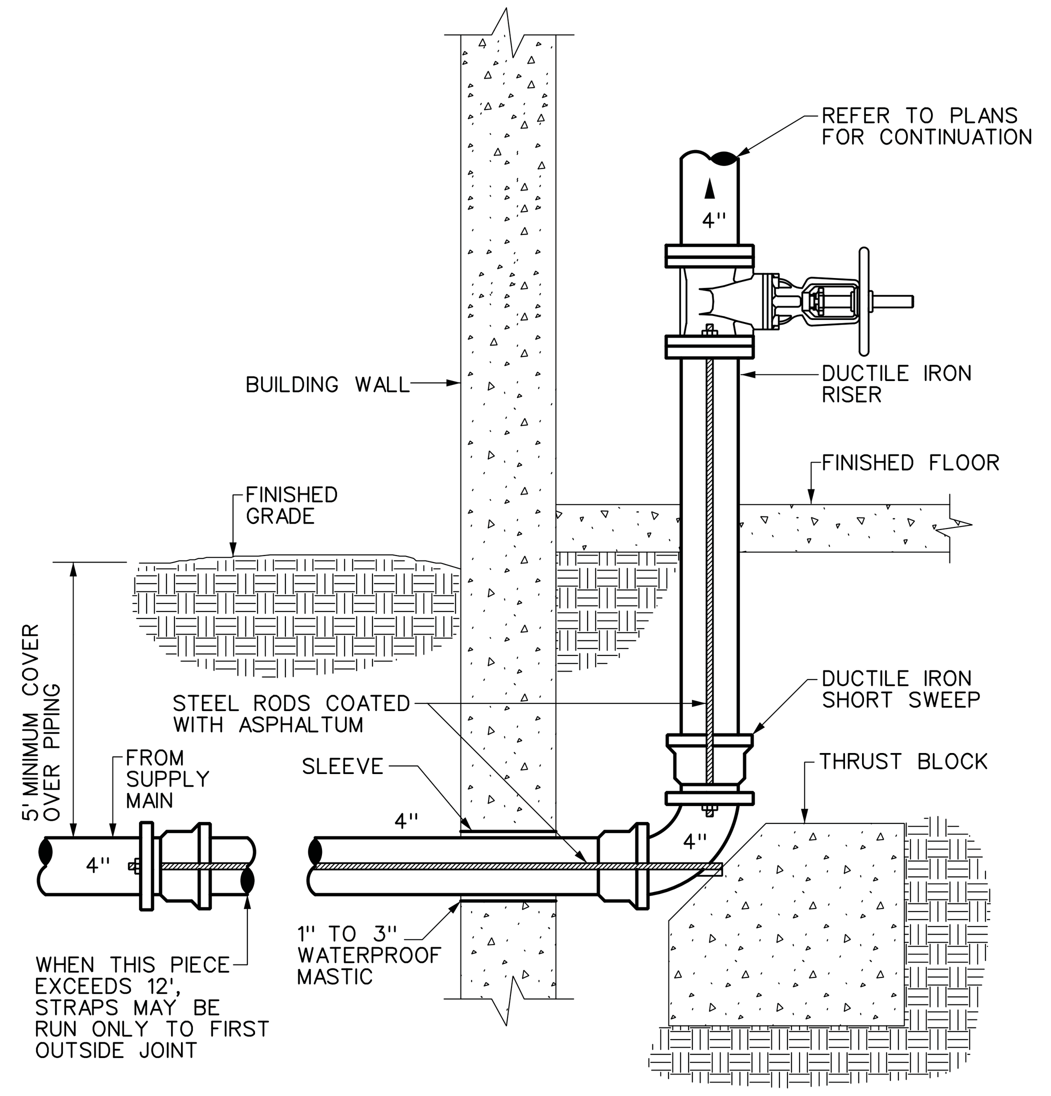

1 P301 WATER SERVICE ENTRANCE DETAIL (DOMESTIC)
SCALE: NONE

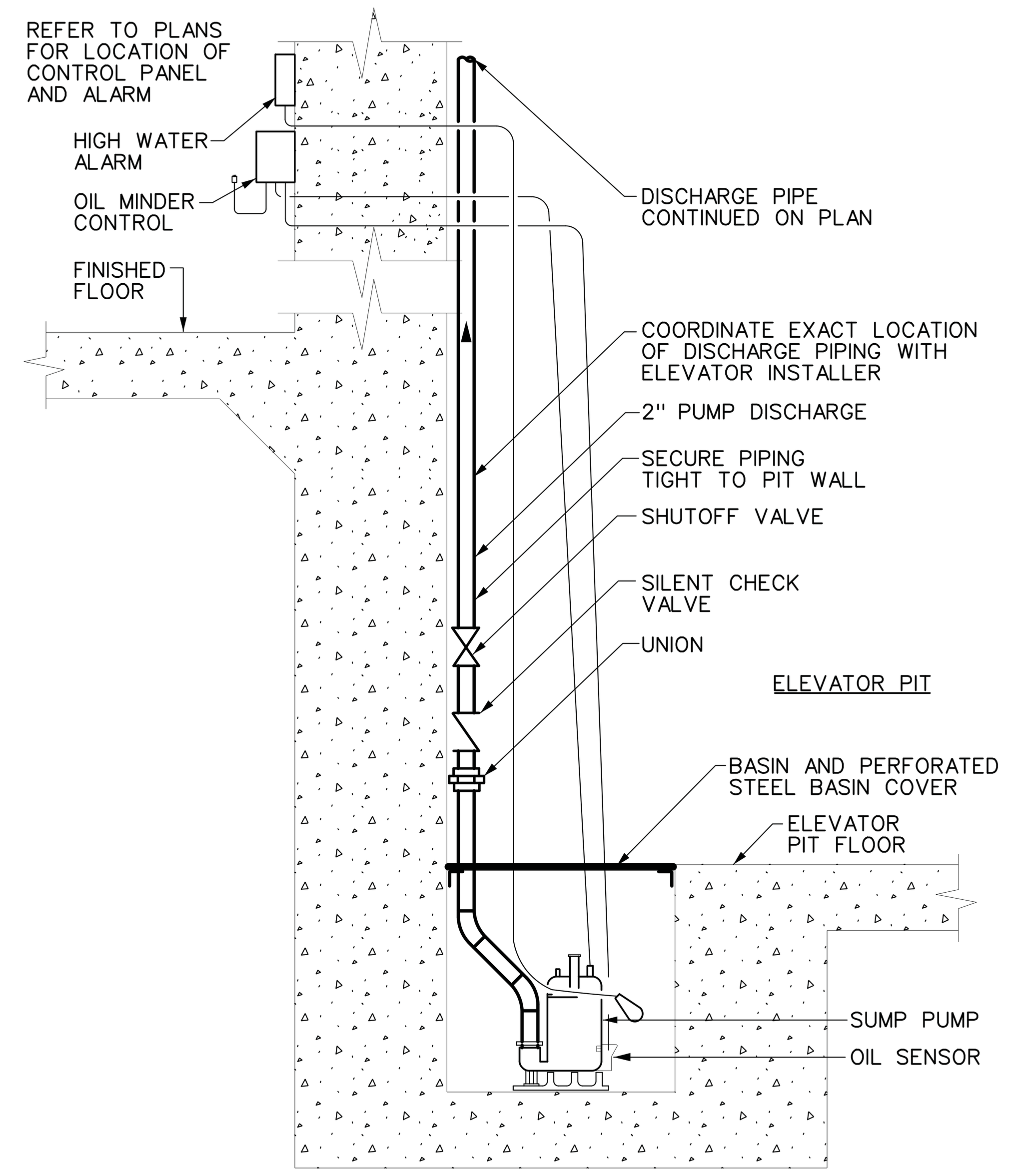

2 P301 ELEVATOR SUMP PUMP DETAIL
SCALE: NONE — BASIN IN SHAFT

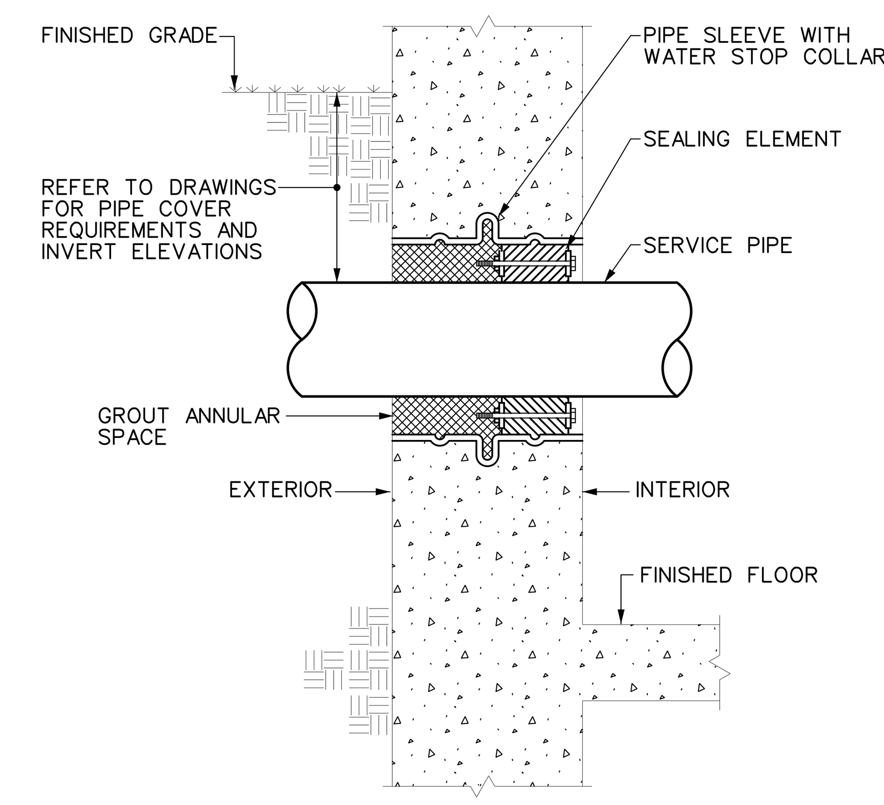

3 P301 PIPE THRU NEW EXTERIOR WALL DETAIL
SCALE: NONE

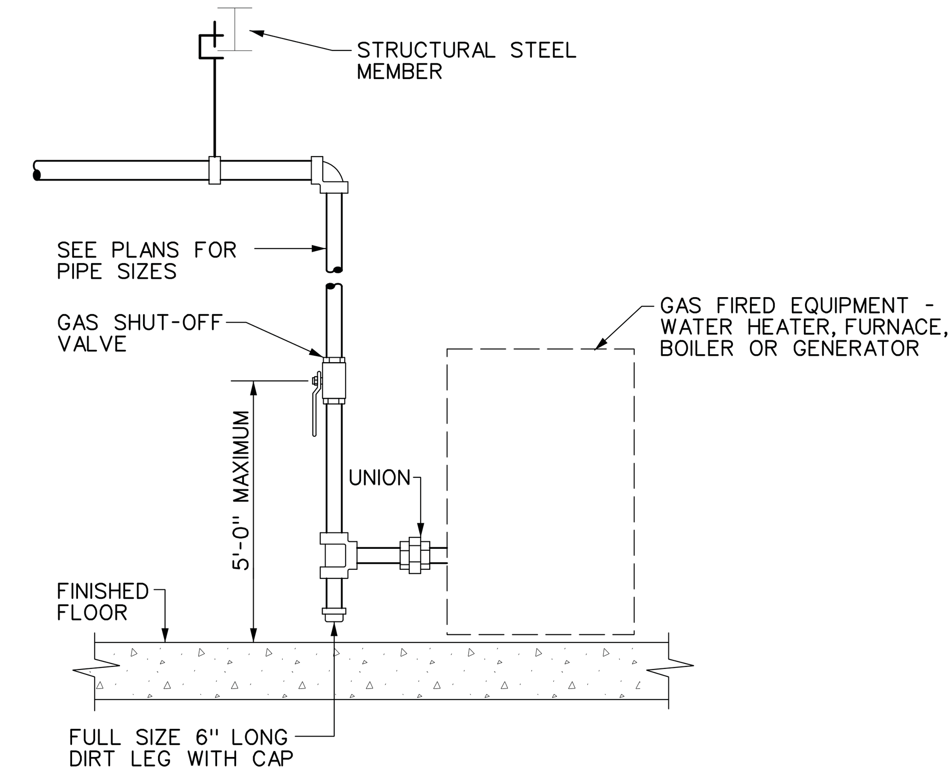

DETAIL NOTES:

A. PROVIDE SHUT-OFF VALVE, DIRT LEG AND UNION AT EACH GAS CONNECTION ON EACH PIECE OF EQUIPMENT.
B. VERIFY CONNECTION SIZES, QUANTITIES AND LOCATIONS WITH M.C.
C. P.C. IS RESPONSIBLE FOR FINAL CONNECTION.

4 P301 GAS EQUIPMENT CONNECTION DETAIL
SCALE: NONE

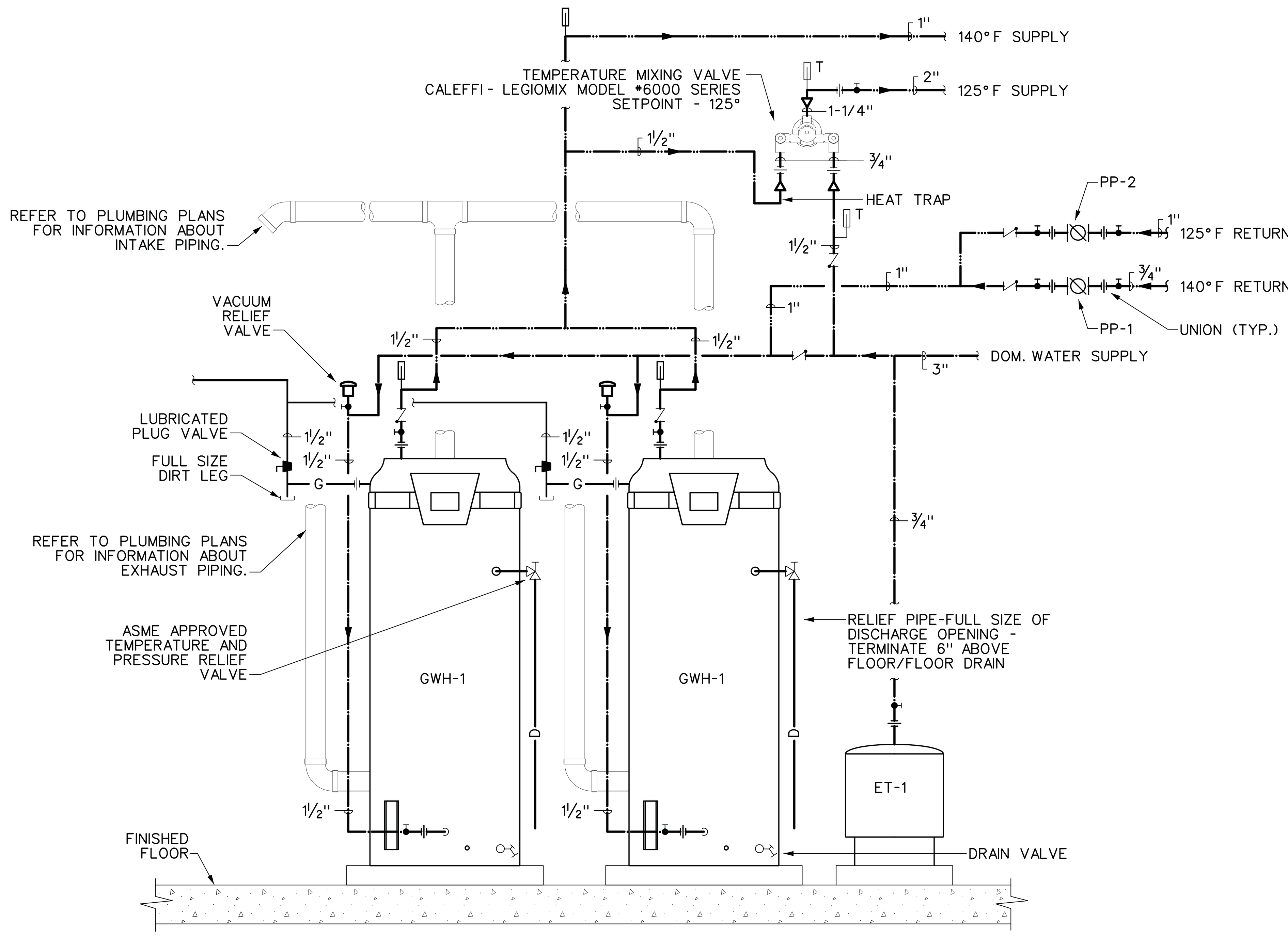

DETAIL NOTES:

A. PROVIDE PIPE NIPPLE THRU EQUIPMENT CASE. CSST & FLEX CONNECTORS SHALL NOT EXTEND THRU EQUIPMENT CASE.
B. PROVIDE SHUT-OFF VALVE AND UNION AT EACH SUPPLY PIPING CONNECTION.
C. P.C. IS RESPONSIBLE FOR FINAL CONNECTIONS
D. THIS DETAIL IS GENERIC. WATER HEATER MFRS. INSTRUCTIONS ARE TO BE FOLLOWED WHERE THEY DIFFER FROM THESE INSTRUCTIONS.
E. COORDINATE WITH STRUCTURAL FOR EQUIPMENT PAD SIZES.

5 P301 GWH-1&2 WATER HEATER DETAIL
SCALE: NONE

LINT INTERCEPTOR SCHEDULE

FLOW GPM	NO. MACH.	IN/OUT SIZE	A	B	C	D	E	F	G	H MIN.	ZURN MODEL
70	7	3"	25"	25"	20"	13½"	0"	25"	6½"	SEE P100	Z-1185

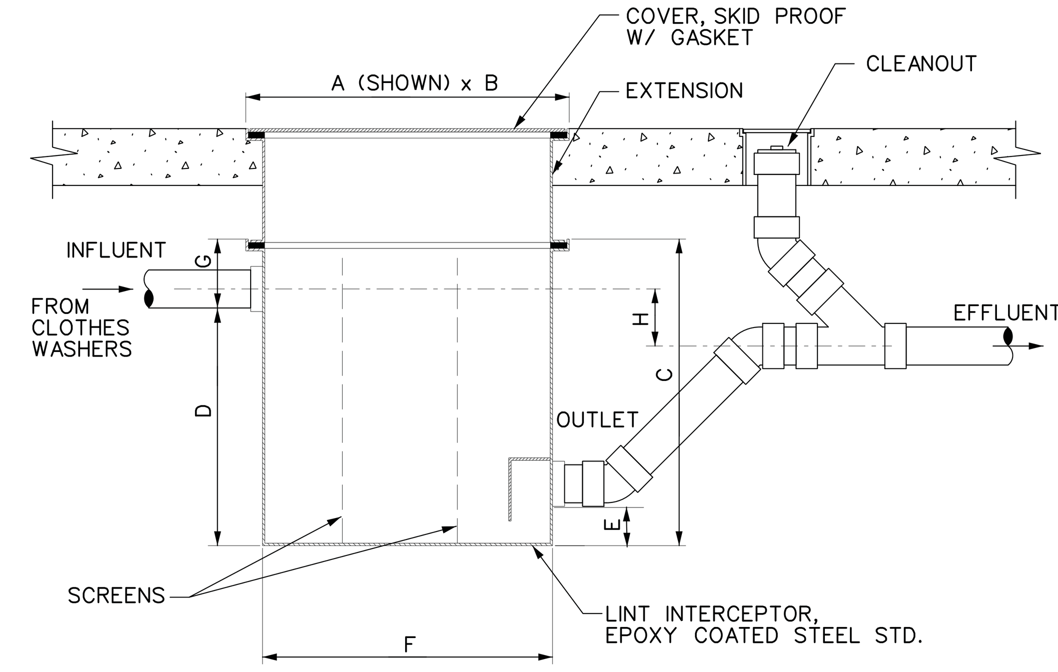

DETAIL NOTES:

A. INTERCEPTOR EXTENSION - PROVIDE WHERE REQUIRED
B. VENTING - PROVIDE ON MFRS. INTERCEPTOR MODELS WITH VENT CONNECTIONS
C. FLUSH PIPING FROM WASHING MACHINE FITTINGS TO INTERCEPTOR, CLEAN SCREENS AND FILL WITH CLEAN WATER PRIOR TO TURNING OVER TO OWNER.

6 P301 LINT INTERCEPTOR DETAIL
SCALE: NONE — BASEMENT MAINTENANCE, RECESSED

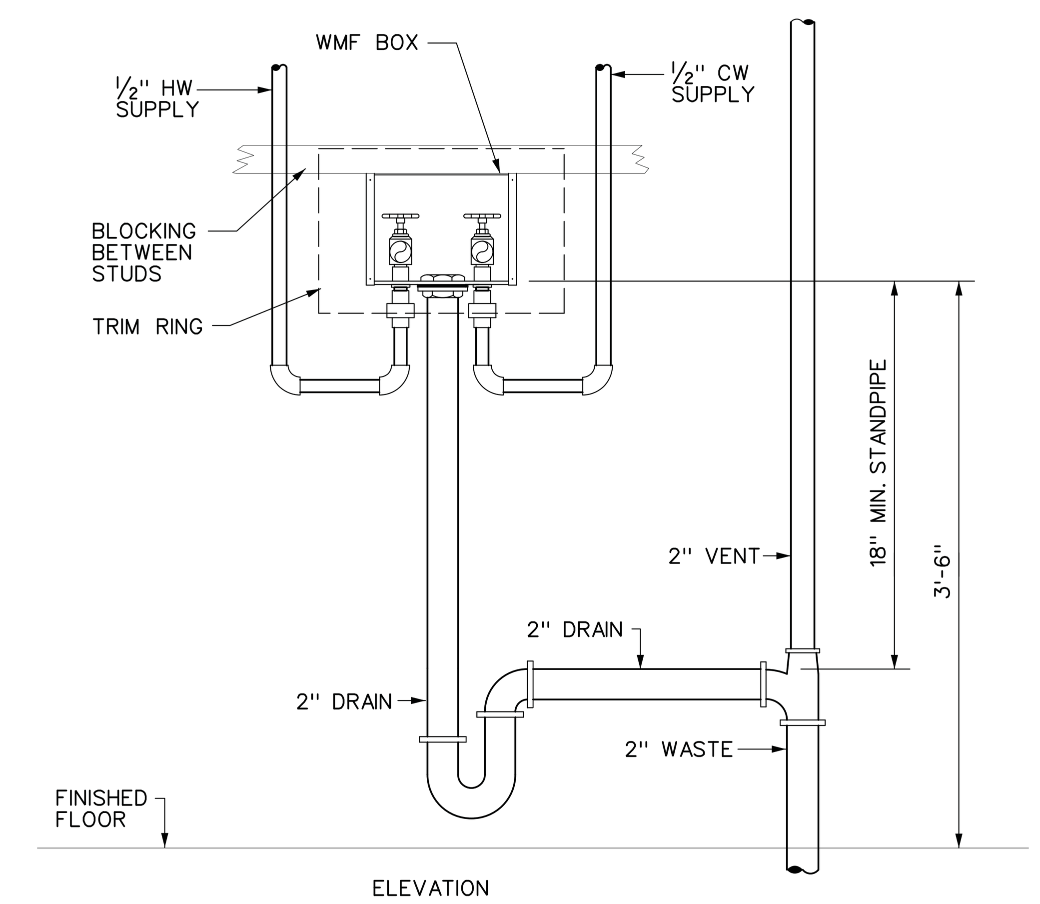

DETAILS NOTES:

A. PROVIDE BLOCKING IN WALL FOR WMB BOX
B. COORDINATE MOUNTING HEIGHT WITH CUTSHEETS OR EQUIPMENT
C. PROVIDE FIRE RATED WMB BOXES IN ALL FIRE RATED WALLS AND/OR PARTITIONS
D. PROVIDE ONE PAIR OF SUPPLY HOSES WITH EACH WMB. HOSES SHALL BE BURST RESISTANT TYPE WITH S.S. BRAID OVER RUBBER HOSE

7 P301 WASHING MACHINE BOX INSTALLATION DETAIL
SCALE: NONE — WMB , SEE PLANS FOR LOCATIONS (RECESSED IN WALLS)

PERMIT SET 05-12-21

M/E ENGINEERING
Mechanical/Electrical Engineering Consultants

DATE: 5/12/2021
REVISED:

PROJECT NO. 203095
DESIGNED BY:
DRAWN BY:
CHECKED BY: RSA
SCALE: AS NOTED
NOTES:

PLUMBING DETAILS

HARRIS A. SANDERS ARCHITECTS, P.C.
252 WASHINGTON AVENUE, ALBANY, NEW YORK 12210

L'DOR ADULT CARE FACILITY
156 WEST CLARKSTOWN ROAD
NEW CITY N.Y. 10956

SHEET NO.
P301

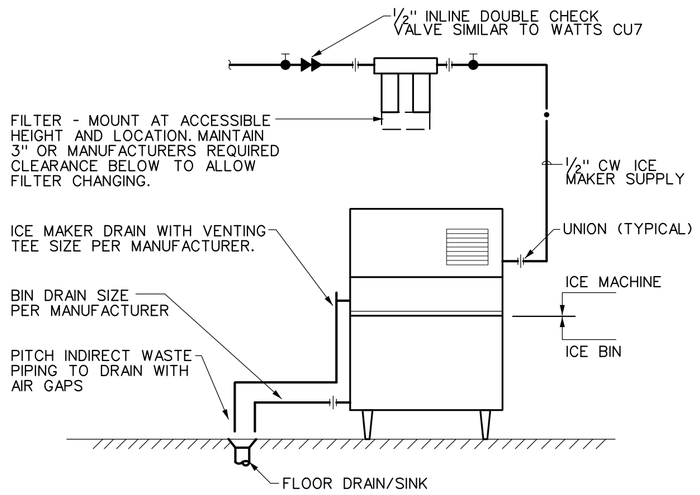

DETAIL NOTES:

A. PROVIDE DRAINS TO NEAREST FLOOR DRAIN/SINK FROM ICE MAKER SUMP, ICE BIN AND BACKFLOW PREVENTER. TERMINATE PIPING AT 1" ABOVE DRAIN.

B. PITCH INDIRECT WASTE PIPING 1/4" PER FOOT MINIMUM.

C. CONNECTIONS ARE DIAGRAMATIC AND SHOWN ON SIDES OF ICE MACHINE FOR CLARITY. THEY WILL NORMALLY BE ON THE BACK OF THE MACHINE. COORDINATE FINAL POINTS OF CONNECTION WITH THE MANUFACTURER.

D. INSULATE SUPPLY AND DRAIN PIPING. COVER INSULATION WITH JACKET.

1 P302 **ICE MACHINE CONNECTION DETAIL**

SCALE: NONE — AIR COOLED ICE MACHINE

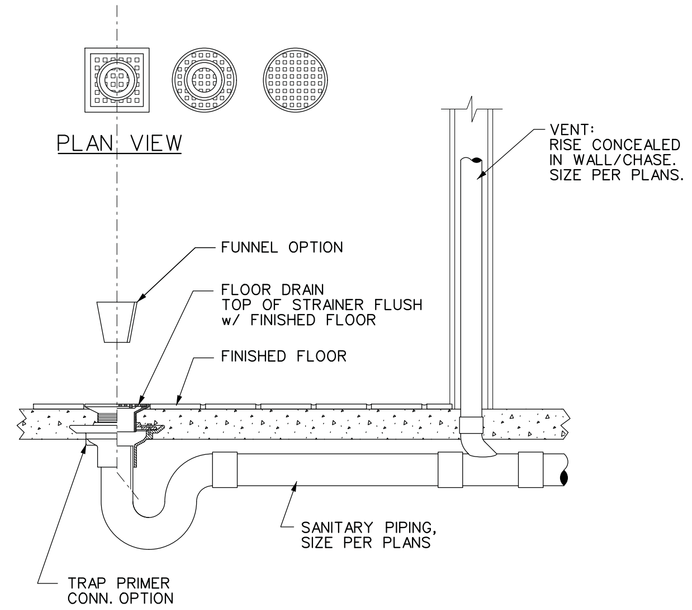

DETAIL NOTES:

A. SEE SPECIFICATIONS FOR:
GRATE PATTERN - ROUND, SQUARE
B. OPTIONS - FUNNEL

C. SEE ARCHITECTURAL PLANS FOR FLOOR FINISHES AND SLOPES

D. DESIGN BASIS: J.R. SMITH #2010
ROUND TOP, NICKEL BRONZE RIM AND ADJUSTABLE STRAINER

NEW 2/04/10 15B450...

2 P302 **FLOOR DRAIN DETAIL**

SCALE: NONE

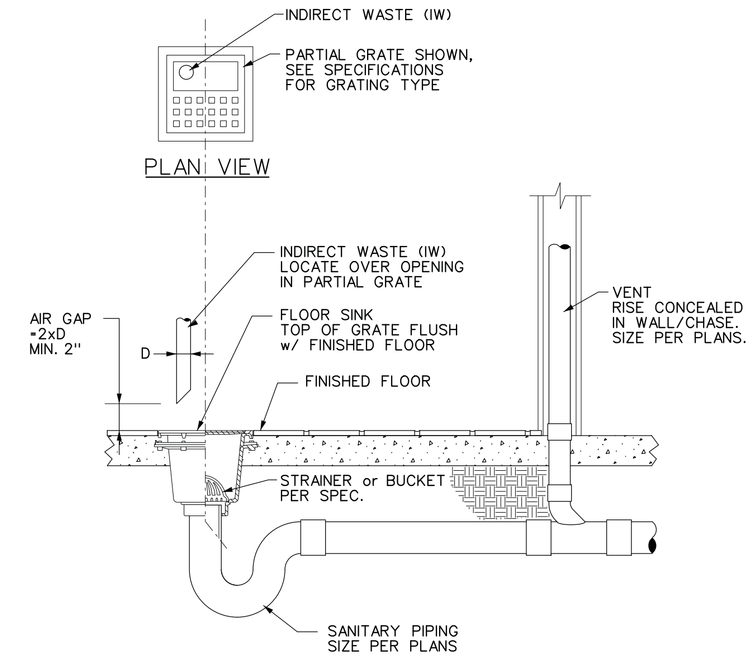

DETAIL NOTES:

A. SEE SPECIFICATIONS FOR:
GRATE PATTERN - 1/2 , 3/4 OR FULL
OPTIONS - BEE HIVE STRAINER, SEDIMENT BUCKET

B. SEE ARCHITECTURAL PLANS FOR FLOOR FINISHES AND SLOPES

C. DESIGN BASIS: J.R. SMITH, SQUARE TOP, NICKEL BRONZE RIM AND SECURED GRATE #3100 - 8 1/2" SQR. TOP x 6" DEEP

3 P302 **FLOOR SINK DETAIL**

SCALE: NONE

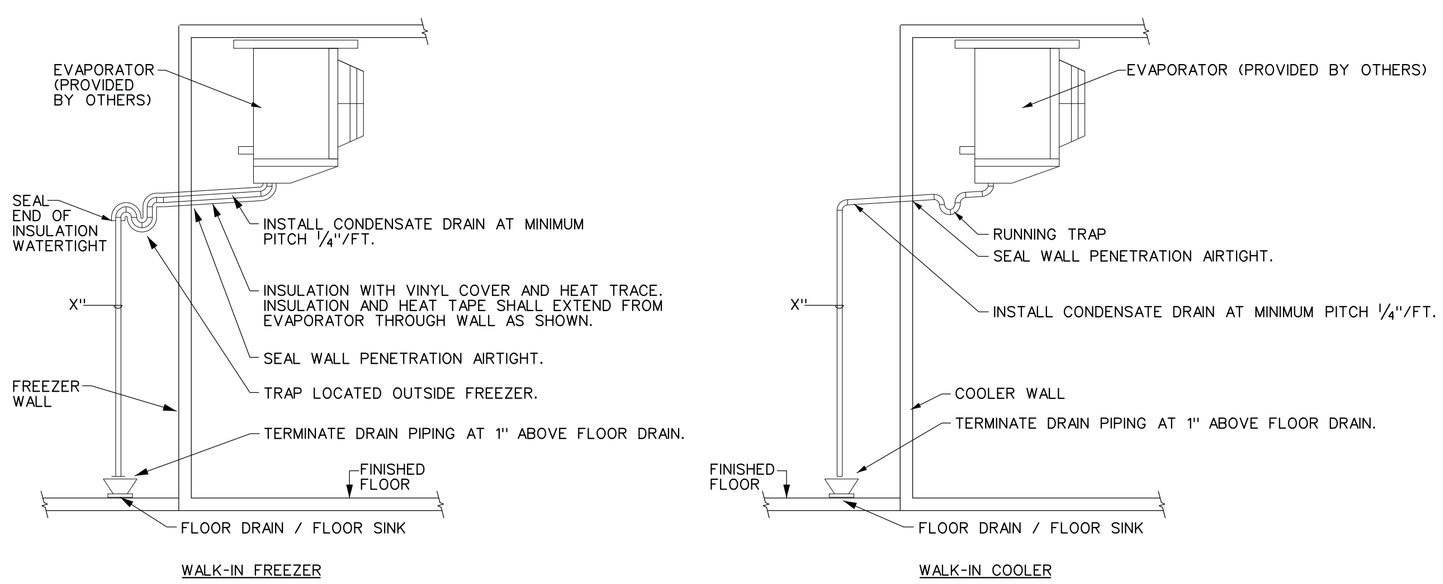

DETAIL NOTES

A. PROVIDE SUPPORTS AS REQUIRED FOR DRAIN PIPING INSIDE AND DOWN ALONG EXTERIOR WALLS OF FREEZER AND COOLER.

4 P302 **CONDENSATE DRAIN DETAILS - WALK-IN COOLER / FREEZER**

SCALE: NONE

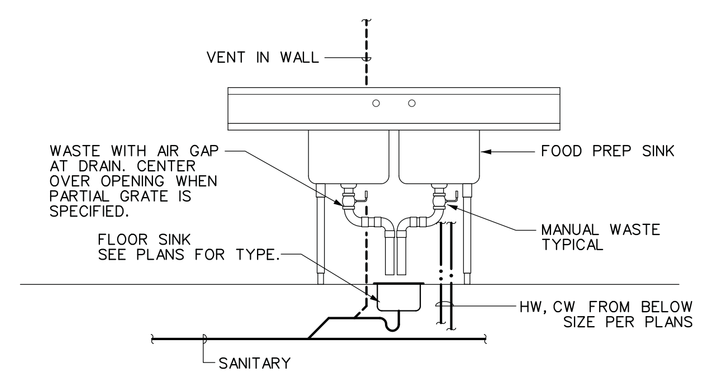

DETAIL NOTES:

A. PROVIDE 1/2" HW & CW TO EACH FAUCET w/ SERVICE VALVES BELOW SINK.

B. WASTE PIPING SHALL BE RUN TO DRAIN INDIVIDUALLY w/ AIR GAP

C. 2 BASIN SHOWN FOR REFERENCE. SEE PLANS FOR BASIN QUANTITY.

D. PROVIDE PIPING SIZED PER PLANS / EQUIPMENT SCHEDULE

5 P302 **FOOD PREP SINK DETAIL**

SCALE: NONE

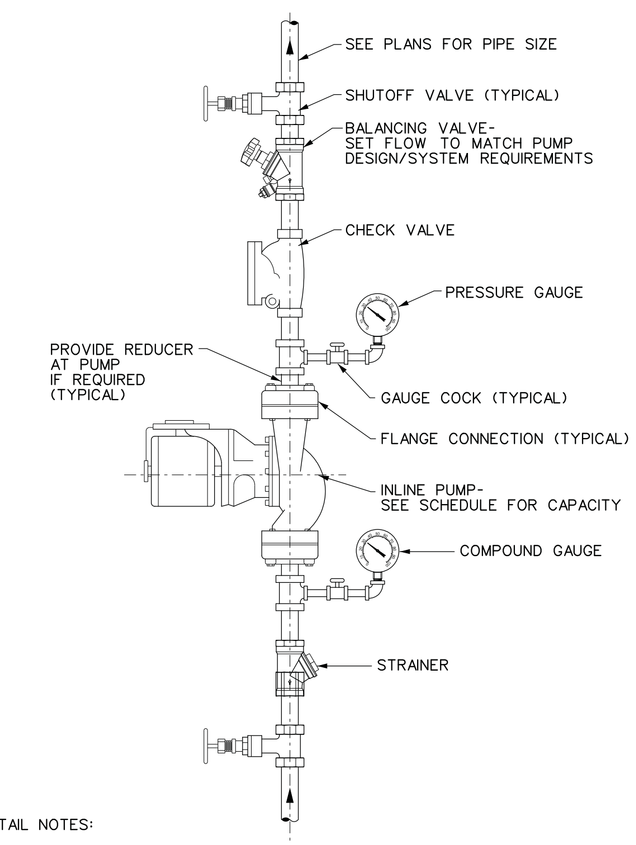

DETAIL NOTES:

A. PRESSURE GAUGES - SELECT GAUGE RANGE TO PLACE MAXIMUM SYSTEM OPERATING PRESSURE IN MIDDLE THIRD OF RANGE.

B. PROVIDE UNION ON PUMP INLET AND OUTLET IF PUMP IS NOT FLANGED.

C. INSTALL PUMP WITH SHAFT HORIZONTAL. PIPING MAY BE INSTALLED VERTICAL, AS SHOWN, OR HORIZONTAL DEPENDING ON SITE CONDITIONS.

D. INSTALL CHECK VALVE HORIZONTALLY OR VERTICALLY WITH FLOW UPWARD.

6 P302 **INLINE PUMP DETAIL**

SCALE: NONE

PERMIT SET 05-12-21

ME ENGINEERING
Mechanical/Electrical/Plumbing Consultants
MEP Projects # 200095
Steven M. Ellis, President & Supervising Engineer
42 Old Ballard Road, Albany, New York 12203-5733
518.869.2139(T) 518.869.4411(F)
SEMEP@NEWYORK.RR.COM
518.861.6171
www.meengineering.com

DATE: 5/12/2021
REVISED:

PROJECT NO: 203095
DESIGNED BY:
DRAWN BY:
CHECKED BY: RSA
SCALE: AS NOTED
NOTES:

PLUMBING DETAILS

HARRIS A. SANDERS ARCHITECTS, P.C.
252 WASHINGTON AVENUE, ALBANY, NEW YORK 12210

L'DOR ADULT CARE FACILITY
156 WEST CLARKSTOWN ROAD
NEW CITY N.Y. 10956

STATE OF NEW YORK · MICHAEL K. SULLIVAN · 077881-1 · LICENSED PROFESSIONAL ENGINEER

SHEET NO.
P302
OF: