NATURAL GAS WATER HEATER SCHEDULE

TAG NO.	GPH RECOVERY @ 100° F RISE	VENT SIZE	NATURAL GAS CFH	STORAGE CAPACITY GALLONS	REFERENCE MANUFACTURER
GWH-1	291	4", 6"	250	100	BRADFORD WHITE EF-100T-250E3N
GWH-1	291	4", 6"	250	100	BRADFORD WHITE EF-100T-250E3N

GREASE INTERCEPTOR SCHEDULE

TAG NO.	LOCATION	GPM FLOW RATE	GREASE CAP. (LBS.)	SIZE			CONNECTION SIZE		MANUFACTURER AND REMARKS
				W	L	D	INLET	OUTLET	
GT-1	KITCHEN	15	30	16.75"	27.25"	13.375"	3"	3"	ZURN Z1170 MODEL 400. PROVIDE EXTENSION RINGS TO FINISH FLOOR AS REQUIRED.

EXPANSION TANK SCHEDULE

TAG NO.	LOCATION	SERVICE	MAXIMIUM SYSTEM PRESSURE (PSI)	TANK VOLUME (GALS.)	ACCEPTANCE VOLUME (GALS.)	MANUFACTURER AND REMARKS
ET-1	WATER ROOM	DOMESTIC HOT WATER	125	14	9	AMTROL ST-30VC

MASTER MIXING VALVE SCHEDULE

TAG NO.	LOCATION	SERVICE	TYPE	DESIGN RANGE (GPM)	MAX PRESS DROP (PSI) AT PEAK FLOW	PEAK FLOW (GPM)	MANUFACTURER AND REMARKS
MV-1	WATER ROOM	BUILDING HOT WATER	ELETRONIC	45	10	70	CALEFFI- LEGIOMIX 6000

PLUMBING PUMPS SCHEDULE

PUMP NO.	LOCATION	SERVICE	GPM	HEAD (FT.)	ELECTRICAL					REFERENCE MANUFACTURER AND REMARKS
					VOLTS	PHASE	CYCLE	HP	RPM	
ESP-1	ELEVATOR SUMPS	WASTE WATER	55	16	115	1	60	1/2	3600	STANCOR MODEL SE50
PP-1	WATER ROOM	140°F WATER	VAR.	25	115	1	60	1/6	VAR.	B&G ECO-CIRC XL 36-45
PP-2	WATER ROOM	125°F WATER	VAR.	25	115	1	60	1/6	VAR.	B&G ECO-CIRC XL 36-45

PLUMBING SPECIALTIES SCHEDULE

TAG NO.	DESCRIPTION	LOCATION	BODY	STRAINER	MANUFACTURER AND REMARKS
FS-A	FLOOR SINK	KITCHEN	CAST IRON	NICKEL BRONZE	JAY R. SMITH FIG. 3100Y-A, 6" DEEP, 8" SQ.
FD-A	FLOOR DRAIN	UNFINISHED AREAS	CAST IRON	POLISHED BRONZE	JAY R. SMITH FIG. 2010C-A
FD-B	FLOOR DRAIN	ELEVATOR	CAST IRON	POLISHED BRONZE	JAY R. SMITH FIG. 2010C-A WITH FUNNEL
NFWH/HB	FREEZELESS WALL HYDRANT	SEE DRAWINGS	N/A	N/A	WOODFORD MODEL B67, CHROME FINISH, ¾", LOOSE KEY WITH BACKFLOW PREVENTER
TB-1	THERMOSTATIC BALANCING VALVE	HW RETURN LOOPS (HWR) SEE DRAWINGS	LOW LEAD BRASS	N/A	CALEFFI MFG. THERMOSETTER RECIRCULATION THERMAL BALANCING VALVE 1164 SERIES

LINT INTERCEPTOR (LT)

TAG NO.	LOCATION	GPM FLOW RATE	INSTALLATION	SIZE			CONNECTION SIZE		MANUFACTURER AND REMARKS
				W	L	D	INLET	OUTLET	
LT-1	BASEMENT MAINTENANCE	70	SET IN FLOOR	25"	25"	20"	3"	3"	ZURN Z1185

PLUMBING FIXTURE CONNECTION SCHEDULE

SEE PLUMBING SPECIFICATIONS FOR COMPLETE FIXTURE INFORMATION

TAG NO.	DESCRIPTION	COLD WATER	HOT WATER	WASTE	SANITARY	VENT	REMARKS
WC-A	WATER CLOSET ADA	½"	-	-	3"	2"	FLOOR MOUNT, TANK TYPE, 17" HEIGHT TO TOP OF SEAT (ADA)
LAV-A	PUBLIC LAVATORY ADA	½"	½"	2"	-	1-½"	WALL HUNG CHINA, 20" X 18", CHICAGO SENSOR FAUCET
LAV-B	PRIVATE LAVATORY ADA	½"	½"	2"	-	1-½"	21" X 17" OVAL UNDERMOUNT, CHICAGO SINGLE LEVER FAUCET
SK-A	SINK	½"	½"	2"	-	1-½"	SINGLE BOWL STAINLESS STEEL, SELF RIMMING, 6" DEEP, SINGLE LEVER WITH 9-1/2" SWING SPOUT
SH-A	SHOWER	½"	½"	2"	-	2"	ONE-PIECE ACRYLIC SHOWER
MB-A	MOP BASIN	½"	½"	3"	-	2"	24" X 24" X 10" MOLDED STONE WITH BUMPER GUARDS, MOP BRACKET. PROVIDE CHECK VALVES ON SUPPLY LINES.
WMB	WASHING MACHINE BOX	½"	½"	2"	-	2"	GUY GREY MODEL DLWB1

PLUMBING GENERAL NOTES

SUBMIT ALL REQUIRED PLUMBING DOCUMENTS TO LOCAL PLUMBING OFFICIAL FOR APPROVAL. THE ENTIRE PLUMBING SYSTEM SHALL BE INSTALLED IN COMPLIANCE WITH ALL APPLICABLE BUILDING CODES, REGULATIONS, LOCAL REQUIREMENTS AND PROJECT SPECIFICATIONS.

THE PLUMBING CONTRACTOR SHALL COORDINATE ALL PIPING WITH MECHANICAL, ELECTRICAL, ARCHITECTURAL, AND STRUCTURAL TRADES PRIOR TO CONSTRUCTION TO AVOID INTERFERENCE.

PLUMBING CONTRACTOR SHALL CONNECT ALL ITEMS OF EQUIPMENT FURNISHED BY OTHERS AND UNDER OTHER SECTIONS OF THE SPECIFICATIONS. CONTRACTOR SHALL PROVIDE ALL ITEMS NECESSARY TO COMPLETE THE PLUMBING INSTALLATION.

REFER TO ARCHITECTURAL DRAWING FOR ROUGHING DIMENSIONS OF PLUMBING FIXTURE MOUNTINGS HEIGHTS.

PROVIDE UNIONS FOR ALL PIPING CONNECTIONS TO EQUIPMENT.

ALL PLUMBING FIXTURES AND EQUIPMENT SHALL BE IN COMPLIANCE WITH CURRENT APPLICABLE ENERGY CONSERVATION CODES.

ALL PIPING AND EQUIPMENT IS SHOWN DIAGRAMMATICALLY ONLY. GENERAL ORIENTATION SHOWN IN PLAN AND SECTIONAL DRAWINGS. EXACT LOCATION SHALL BE DETERMINED IN FIELD. MAINTAIN HEAD ROOM AND SPACE CONDITIONS AT ALL TIMES. ALL WORK SHALL BE COORDINATED WITH ALL TRADES BEFORE PROCEEDING WITH INSTALLATION. PRIOR TO CONSTRUCTION, CONTRACTOR SHALL NOTIFY ARCHITECT/ENGINEER OF ANY DISCREPANCIES. PRIOR TO EQUIPMENT SUBMITTALS, CONTRACTOR SHALL VERIFY EXISTING AND PROPOSED CONDITIONS SUCH AS CORRIDORS, PASSAGE-WAY ROOM SIZES, ETC. TO ENSURE SPECIFIED EQUIPMENT CAN BE PROPERLY INSTALLED.

INSTALL PIPING CLOSE TO WALLS, PARTITIONS, CEILINGS, ETC. OFFSET ONLY WHERE NECESSARY TO FOLLOW WALLS, AS INDICATED. PROVIDE ALL NECESSARY FITTINGS, OFFSETS, VALVES AND OTHER DEVICES REQUIRED FOR A COMPLETE INSTALLATION.

INSTALL PIPING IN A CONCEALED MANNER, STRAIGHT, PLUMB AND AS DIRECT AS POSSIBLE. FORM RIGHT ANGLES PARALLEL WITH BUILDING WALLS. LOCATE GROUPS OF PIPES PARALLEL TO EACH OTHER. PIPE SHALL BE LOCATED TO PERMIT ACCESS FOR SERVICE VALVES.

ALL PIPING SHALL BE REAMED TO BE FREE OF BURRS. KEEP PIPING FREE FROM SCALE AND DIRT. PROTECT OPEN PIPE ENDS WHENEVER WORK IS SUSPENDED DURING CONSTRUCTION TO PREVENT FOREIGN MATERIAL FROM ENTERING, AND CAP ALL OPEN ENDS DURING CONSTRUCTION WITH APPROVED TEMPORALLY CAPS OR MATERIALS.

MAINTENANCE LABELS SHALL BE AFFIXED TO ALL PLUMBING EQUIPMENT AND MAINTENANCE AND OPERATION MANUALS SHALL BE PROVIDED TO OWNER.

INSTALL WELDED OR THREADED PIPE IN AREAS WHERE SPACE IS CRITICAL BETWEEN FINISHED CEILING AND STRUCTURAL SURFACE. INSTALL ALL VENTS THRU ROOF 10'-0" MINIMUM FROM EDGE OF ROOF AND 25'-0" FROM FRESH AIR INTAKES.

IF REQUIRED, SUBMIT APPROVED PRESSURE REDUCING VALVES & BACKFLOW PREVENTION DEVICES TO WATER AUTHORITY. CONTRACTOR SHALL PROVIDE ALL NECESSARY DEVICES PER WATER AUTHORITY REQUIREMENTS AND MANUFACTURER RECOMMENDATIONS.

ALL WALL, CEILING AND FLOOR PENETRATIONS CONVEYING PLUMBING AND DRAINS SHALL BE FULLY SEALED AND CAULKED AROUND THE PENETRATING FEATURE TO RESTORE THE REQUIRED FIRE OR SMOKE BARRIER RATING OF THE WALL, CEILING OR FLOOR PENETRATED. AT A MINIMUM, AT ALL LOCATIONS A TWENTY (20) MINUTE FIRE/SMOKE RESISTANCE SHALL BE MAINTAINED. WHERE REQUIRED BY CODE, THE PENETRATING FEATURES SHALL ALSO BE SUPPLIED AND INSTALLED WITH A MECHANISM OR MATERIAL WHICH WILL MAINTAIN THE WALL, CEILING OR FLOOR RATING IN THE EVENT OF A FIRE.

PLUMBING OR SPRINKLER RELATED PIPE SHALL NOT PENETRATE INTO OR PASS THROUGH STAIRWAYS UNLESS IT IS REQUIRED FOR SERVICING THE STAIRWAY OR IT IS SEGREGATED FROM THE STAIRWAY PASSAGEWAY BY AN ENCLOSURE SYSTEM RATED EQUAL TO OR GREATER THAN THE REQUIRED STAIRWAY RATING.

INSTALL WATER HAMMER ARRESTORS IN COMPLIANCE WITH ALL APPLICABLE CODES. WATER HAMMER ARRESTORS SHALL BE AS INDICATED ON THE RISER DIAGRAMS. SIZE OF WATER HAMMER ARRESTORS SHALL BE ACCORDING TO THE WATER HAMMER SCHEDULE AND MANUFACTURER'S RECOMMENDATIONS FOR THAT BRANCH LINE.

CLEANOUTS SHALL BE PROVIDED AS INDICATED ON PLANS AND AS REQUIRED BY THE LOCAL CODES.

PRIOR TO INSTALLING ANY PIPING, VERIFY EXISTING OR NEW INVERT ELEVATIONS, LOCATIONS AND PIPE SIZES. INSTALL ALL SANITARY, WASTE, AND STORM MAINS BEGINNING AT LOW POINT OF EACH SYSTEM AND CONTINUE WITH UNBROKEN CONTINUITY OF INVERT. LOW POINT OF EACH SYSTEM SHALL BE COORDINATED WITH SITE UTILITIES CONTRACTOR. REFER TO SITE UTILITY PLANS FOR REFERENCE.

DRAIN VALVES SHALL BE PROVIDED ON LOWEST POINT OF ALL DOMESTIC WATER RISERS AS FOLLOWS: 1-1/2" OR LESS-PROVIDE 1/2" DRAIN VALVE. 2" OR LARGER-PROVIDE 3/4" DRAIN VALVE.

PROVIDE ISOLATION VALVES AT ALL FIXTURES AND EQUIPMENT.

PLUMBING SYMBOL LIST

SYMBOL	DESCRIPTION
	EXISTING WORK TO BE REMOVED
	POINT OF CONNECTION
	POINT OF DISCONNECTION
NTS	NOT TO SCALE
(E)	EXISTING
(ETR)	EXISTING TO REMAIN
AFF	ABOVE FINISHED FLOOR
BFF	BELOW FINISHED FLOOR
VTR	VENT THRU ROOF
GC	GENERAL CONTRACTOR
MC	MECHANICAL CONTRACTOR
PC	PLUMBING CONTRACTOR
EC	ELECTRICAL CONTRACTOR
(E)	EXISTING PIPING
	NEW PIPING LOCATED ABOVE FLOOR/SLAB
	NEW PIPING LOCATED BELOW FLOOR/SLAB
	COLD WATER PIPING (CW)
	HOT WATER PIPING (HW)
	HOT WATER RECIRCULATING PIPING (HWR)
140	140° HOT WATER PIPING (HW)
TW	TEMPERED HOT WATER PIPING (TW)
TWR	TEMPERED HOT WATER RETURN PIPING (TWR)
W	WATER SERVICE - EXTERIOR
SAN	SANITARY SEWER PIPING
IW	INDIRECT WASTE PIPING (IW)
	VENT PIPING
ST	STORM WATER SEWER PIPING (ST)
G	NATURAL GAS PIPING (G)
LPG	LP GAS PIPING (LPG)
	ELBOW DOWN
	45° OFFSET
	ELBOW UP
	BOTTOM/TEE CONNECTION
	TOP TEE CONNECTION
	"P" TRAP
	PIPE CONTINUATION
	CAP OR PLUG
	DECK PLATE CLEANOUT (DPCO)
	WALL PLATE CLEANOUT (WPCO)
	CLEANOUT (CO)
	FLOOR DRAIN (FD) / FLOOR SINK (FS)
	ROOF DRAIN
	WALL HYDRANT (WH) / HOSE BIBB (HB)
	STRAINER
M	WATER METER
	FULL PORT BALL VALVE
	BALANCING VALVE
	CHECK VALVE
	SOLENOID VALVE
	PRESSURE REDUCING VALVE
	RELIEF VALVE
$	SHUT-OFF SWITCH
	PIPE ANCHOR
	PIPE GUIDE
	UNION
	BACKFLOW PREVENTER (BFP)
	SHOCK ABSORBER (SA)
	RECIRCULATION PUMP
	THERMOMETER
	PRESSURE GAUGE
T	TRAP PRIMER (TP)

PERMIT SET 05-12-21

ME ENGINEERING
Mechanical/Electrical/Plumbing Consultants
MEP Projects # 200099
Steven Michael Sunman, President
42 Ft Orchard Street, Cohoes, New York 12047
518.235.0700 | 518.235.0711
SUNMAN@MEENGINEERING.COM
www.meengineering.com

DATE: 5/12/2021
REVISED:

PROJECT NO: 203095
DESIGNED BY: JME
DRAWN BY: JME
CHECKED BY: RSA
SCALE: AS NOTED
NOTES:

NOTES, SCHEDULES & LEGEND

HARRIS A. SANDERS ARCHITECTS, P.C.
252 WASHINGTON AVENUE, ALBANY, NEW YORK 12210

L'DOR ADULT CARE FACILITY
156 WEST CLARKSTOWN ROAD
NEW CITY N.Y. 10956

STATE OF NEW YORK · MICHAEL K. SUNMAN · 077887-1 · LICENSED PROFESSIONAL ENGINEER

SHEET NO:
P001
OF:

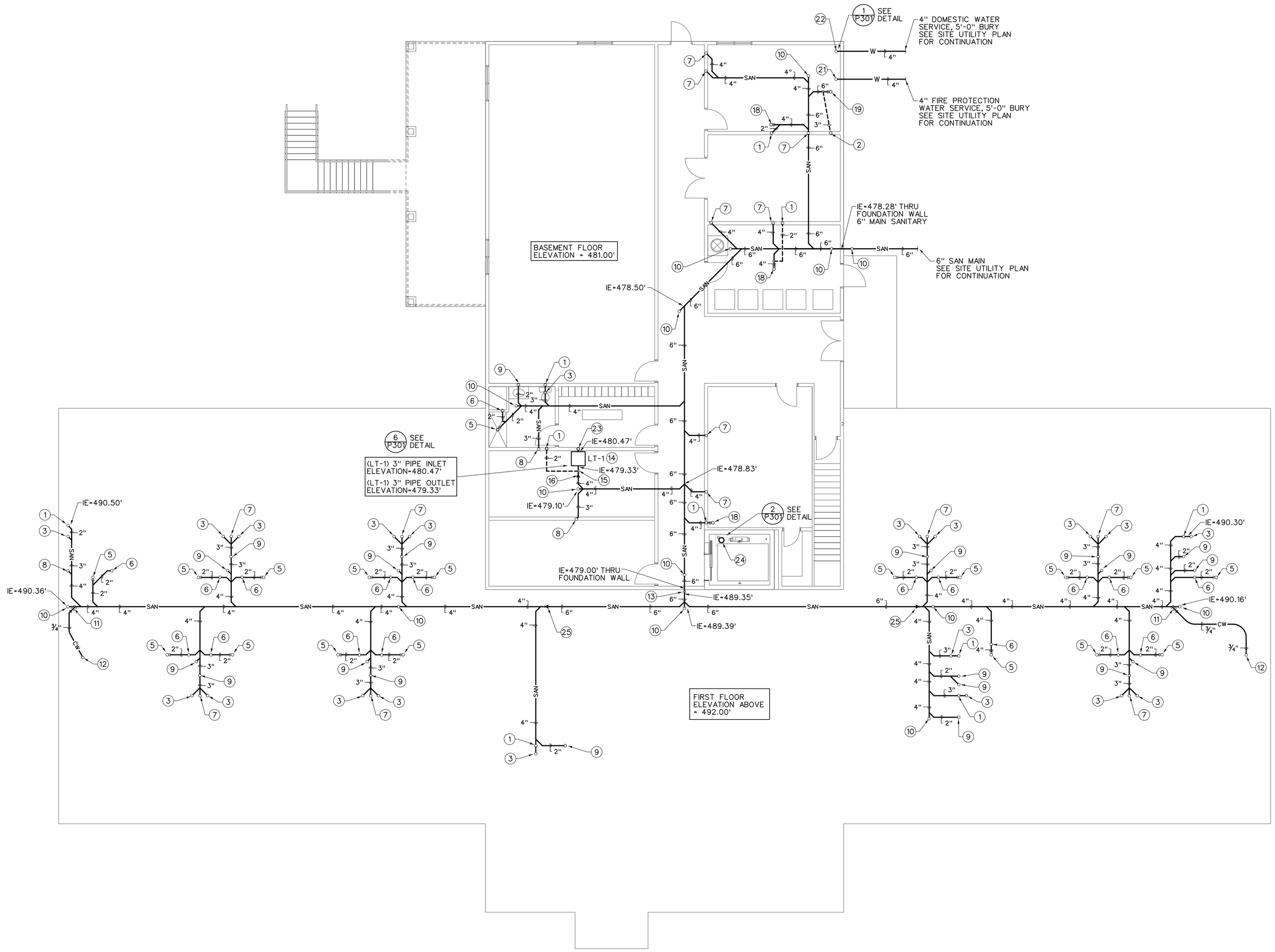

BELOW FLOOR SANITARY AND VENT PLUMBING PLAN (1 / P100)

SCALE:1/8"=1'-0"

GENERAL NOTES:

A. ALL PIPING IS ABOVE THE CEILING UNLESS OTHERWISE INDICATED.

B. ALL PIPING SHALL BE INSTALLED CONCEALED UNLESS OTHERWISE INDICATED.

C. COORDINATE ALL WORK WITH OTHER TRADES PRIOR TO BEGINNING WORK.

D. ALL SANITARY PIPING SHALL SLOPE AT MINIMUM 1%.

E. ALL STORM PIPING SHALL SLOPE AT MINIMUM 2% UNLESS OTHERWISE NOTED.

F. PROVIDE LINK SEAL SEALING SLEEVES AT ALL LOCATIONS WHERE PIPING PENETRATES EXTERIOR WALLS AND FLOOR SLABS ON GRADE.

DRAWING NOTES:

1. 2" VENT UP
2. 3" VENT UP
3. 3" SAN UP TO WATER CLOSET
4. 2" SAN UP TO SINK/LAV
5. 2" SAN UP, 2" P-TRAP TO SHOWER DRAIN ABOVE
6. 2" SHOWER DRAIN VENT UP
7. 4" SAN UP
8. 3" SAN UP
9. 2" SAN UP
10. 4" SAN UP TO FLOOR CLEANOUT (DPCO)
11. 4"x 2" WYE, 2"x 3/4"IPS BUSHING ON BRANCH. INSTALL WYE BRANCH AT 45° ANGLE OR GREATER. CONNECT 3/4" CW SUPPLY TO BRANCH. TO BE UTILIZED FOR FUTURE DRAIN LINE FLUSHING
12. 3/4" CW UP, SEE DRAWING P202
13. 6"SAN DROP AT FOUNDATION WALL AND FLOOR ELEVATION CHANGE. REFER TO INVERT ELEVATIONS FOR BOTTOM PIPE DIMENSIONS BELOW FINISHED FLOORS
14. LINT INTERCEPTOR (LT-1) INSTALL TOP COVER FLUSH WITH BASEMENT FINISHED FLOOR. REFER TO MANUFACTURER EQUIPMENT DIMENSIONS FOR INLET AND OUTLET INVERT ELEVATIONS (IE) DESIGN BASIS: ZURN MODEL NO. Z1185, SIZED FOR 7 WASHING MACHINES. 3" INLET, 6-1/4", 3" OUTLET 20" BELOW TOP OF UNIT (BOTTOM OF PIPE DIMENSIONS)
15. 2" VENT RISE OFF TOP OF 3" LT-1 OUTLET PIPE, PIPE 2" VENT BELOW FINISHED FLOOR TO INDICATED RISER LOCATION IN WALL.
16. 3"x 4" COUPLING/INCREASER AFTER VENT CONNECTION.
17. 3"x 4" INCREASER
18. 4" SAN, 4" P-TRAP UP TO FLOOR DRAIN PROVIDE 2" VENT OFF TOP OF PIPE AS SHOWN
19. 6" SAN, 6" P-TRAP UP TO FLOOR DRAIN PROVIDE 3" VENT OFF TOP OF PIPE AS SHOWN
20. 3" SAN UP, KITCHEN GREASE TRAP OUTLET MAIN
21. 4" FIRE PROTECTION WATER MAIN UP
22. 4" DOMESTIC WATER MAIN UP
23. 3" WASHING MACHINE/LAUNDRY DRAIN RISER UP SEE DWGS. P101, P102, AND P103.
24. ELEVATOR SUMP PUMP (PP-2). INSTALL IN ELEVATOR SHAFT SUMP PIT. 2" PUMP DISCHARGE UP. SEE DETAIL DWG. PXXX
25. INCREASE SANITARY MAIN TO 6" AT THIS POINT. 4"x 6" COUPLING

PERMIT SET 05-12-21

ME ENGINEERING
Mechanical/Electrical/Plumbing Consultants
M.E Project # 200095
Steven J. Ostrander & Associates, Inc. dba
ME ENGINEERING
42 EXECUTIVE BLVD, SUITE 201
SOUTHFIELD, NY 10975
914.963.1373
www.meengineering.com

DATE: 5/12/2021
REVISED:

PROJECT NO: 203095
DESIGNED BY: JJAE
DRAWN BY: JJAE
CHECKED BY: RSA
SCALE: AS NOTED
NOTES:

BELOW FLOOR SANITARY AND VENT PLUMBING PLAN

HARRIS A. SANDERS ARCHITECTS, P.C.
252 WASHINGTON AVENUE, ALBANY, NEW YORK 12210

L'DOR ADULT CARE FACILITY
156 WEST CLARKSTOWN ROAD
NEW CITY N.Y. 10956

STATE OF NEW YORK · MICHAEL K. SUNMAN · 077887-1 · LICENSED PROFESSIONAL ENGINEER

SHEET NO.
P100
OF:

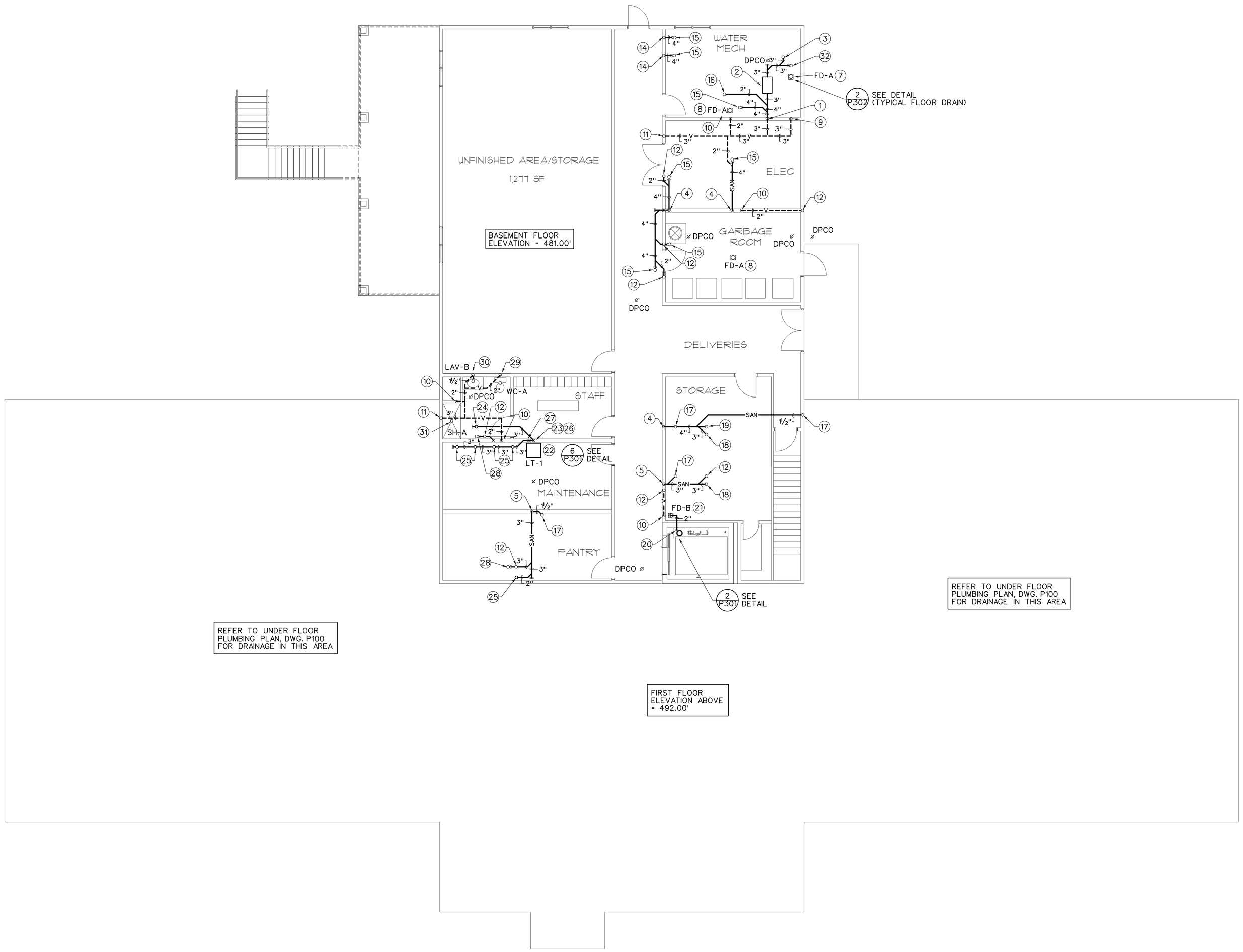

NORTH

BASEMENT SANITARY AND VENT PLUMBING PLAN

SCALE: 1/8"=1'-0"

1 / P101

GENERAL NOTES:

A. ALL PIPING IS ABOVE THE CEILING UNLESS OTHERWISE INDICATED.

B. ALL PIPING SHALL BE INSTALLED CONCEALED UNLESS OTHERWISE INDICATED.

C. COORDINATE ALL WORK WITH OTHER TRADES PRIOR TO BEGINNING WORK.

D. ALL SANITARY PIPING SHALL SLOPE AT MINIMUM 1%.

E. ALL STORM PIPING SHALL SLOPE AT MINIMUM 2% UNLESS OTHERWISE NOTED.

F. PROVIDE LINK SEAL SEALING SLEEVES AT ALL LOCATIONS WHERE PIPING PENETRATES EXTERIOR WALLS AND FLOOR SLABS ON GRADE.

DRAWING NOTES:

1. 4" SAN DOWN, 3" VENT RISE
2. GREASE TRAP (GT-A), RECESSED IN CEILING/FLOOR ABOVE. SEE DWG. P102
3. 3" VENT UP, GREASE TRAP VENTING
4. 4" SAN DOWN
5. 3" SAN DOWN
6. 2" SAN DOWN
7. 6" FLOOR DRAIN, 6" P-TRAP
8. 4" FLOOR DRAIN, 4" P-TRAP
9. 3" VENT DOWN, 3" VENT RISE
10. 2" VENT DOWN, 2" VENT RISE
11. 3" VENT UP
12. 2" VENT UP
13. 2" SAN DOWN, 2" SAN UP
14. 4" SAN DOWN, 2" VENT RISE
15. 4" SAN UP, 4" P-TRAP TO FLOOR SINK OR FLOOR DRAIN
16. 2" SAN UP TO HAND WASH SINK
17. 1-1/2" SAN UP
18. 3" SAN UP TO WATER CLOSET
19. 4" SAN UP
20. 2" PUMP DISCHARGE DROP TO ELEVATOR SUMP PUMP 2" PUMP DISCHARGE RISE, PIPE INDIRECT OVER FLOOR DRAIN FUNNEL (FD-B) PROVIDE 2" BALL VALVE, 2" CHECK VALVE IN VERTICAL RISER.
21. 4" FLOOR DRAIN, 4" P-TRAP. PROVIDE FUNNEL ASSEMBLY TO RECEIVE INDIRECT WASTE/SUMP PUMP DISCHARGE TERMINATION
22. LINT TRAP/INTERCEPTOR RECESSED IN FLOOR SEE DWG. P100 FOR INLET AND OUTLET DRAINAGE.
23. WASHING MACHINE WASTE MAIN. 3" DOWN
24. 3" WASHING MACHINE DRAIN RISER UP, SEE DWG. P102
25. 2" DRAIN UP TO WASHING MACHINE DRAIN AND SUPPLY BOX
26. 3" DRAIN LINE DOWN TO LINT TRAP INLET
27. 3" DRAIN, ROLL DOWN TO 3" DRAIN RISER
28. 3" SAN, 3" P-TRAP UP TO MOP SINK
29. 3" SAN, 2" VENT AT WATER CLOSET
30. 2" SAN DOWN, 1-1/2" VENT RISE AT LAV
31. 2" SAN DOWN, 2" P-TRAP BELOW FLOOR 2" VENT AT SHOWER DRAIN
32. 3" GREASE WASTE (GW), 3"P-TRAP UP TO FLOOR SINK BELOW 3-BAY SINK

PERMIT SET 05-12-21

ME ENGINEERING
Mechanical/Electrical/Plumbing Consultants
M.E. Project # 200095
Steven J. Ostrander & Associates, Inc.
Steven J. Ostrander & Associates, Inc.
42 Grand Street, Cohoes, New York 12047
(518) 235-0100 (518) 235-0111
SOA@MEENGINEERING.COM
www.meengineering.com

DATE: 5/12/2021
REVISED:

PROJECT NO: 203095
DESIGNED BY: JJAE
DRAWN BY: JJAE
CHECKED BY: RSA
SCALE: AS NOTED
NOTES:

BASEMENT SANITARY AND VENT PLUMBING PLAN

HARRIS A. SANDERS ARCHITECTS, P.C.
252 WASHINGTON AVENUE, ALBANY, NEW YORK 12210

L'DOR ADULT CARE FACILITY
156 WEST CLARKSTOWN ROAD
NEW CITY N.Y. 10956

STATE OF NEW YORK · MICHAEL K. SULLIVAN · 077887-1 · LICENSED PROFESSIONAL ENGINEER

SHEET NO.
P101
OF:

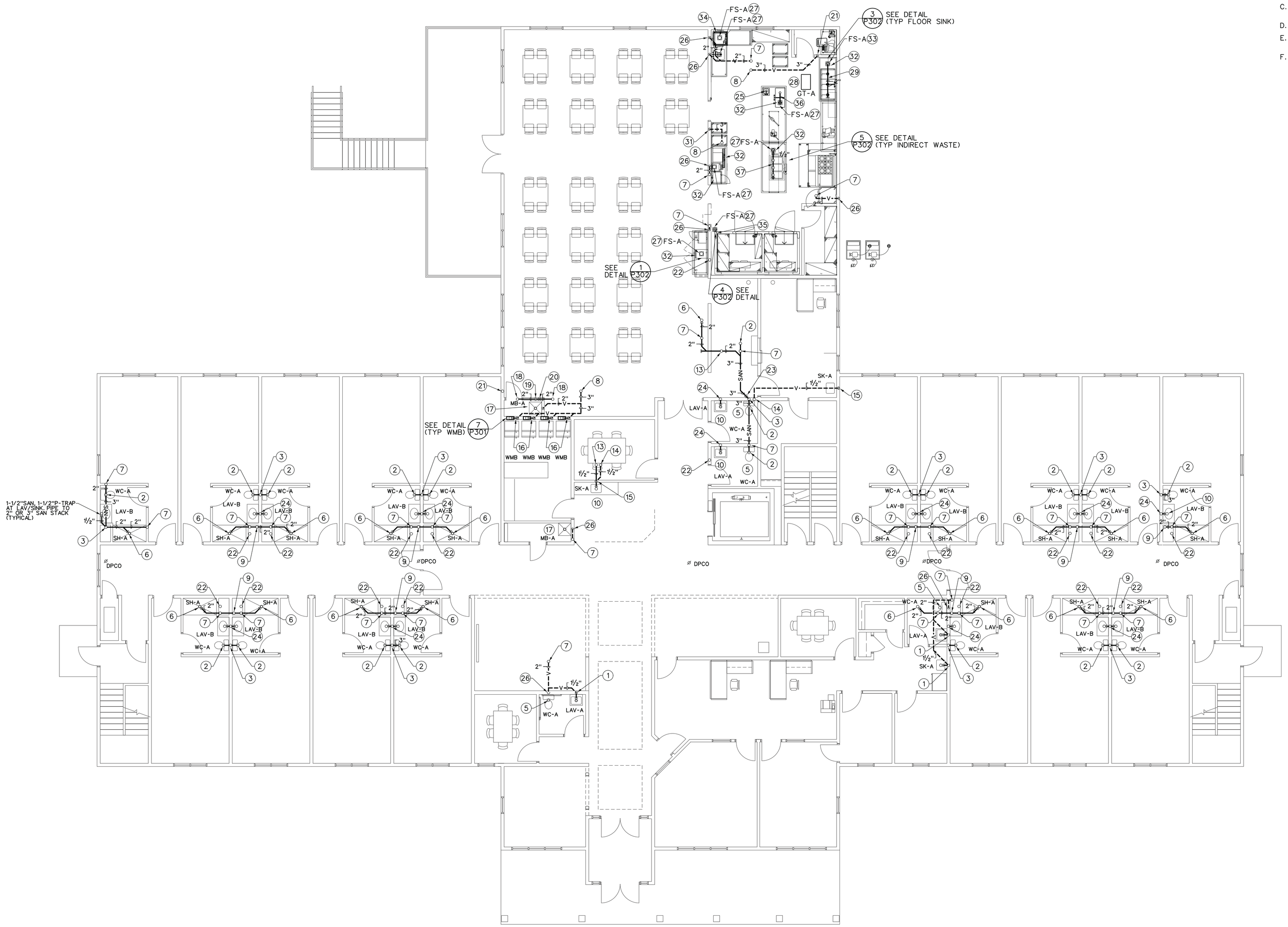

FIRST FLOOR SANITARY AND VENT PLUMBING PLAN (1/P102)

SCALE: 1/8"=1'-0"

GENERAL NOTES:

A. ALL PIPING IS ABOVE THE CEILING UNLESS OTHERWISE INDICATED.

B. ALL PIPING SHALL BE INSTALLED CONCEALED UNLESS OTHERWISE INDICATED.

C. COORDINATE ALL WORK WITH OTHER TRADES PRIOR TO BEGINNING WORK.

D. ALL SANITARY PIPING SHALL SLOPE AT MINIMUM 1%.

E. ALL STORM PIPING SHALL SLOPE AT MINIMUM 2% UNLESS OTHERWISE NOTED.

F. PROVIDE LINK SEAL SEALING SLEEVES AT ALL LOCATIONS WHERE PIPING PENETRATES EXTERIOR WALLS AND FLOOR SLABS ON GRADE.

DRAWING NOTES:

1. 2" SAN DOWN, 1-1/2" VENT RISE
2. 3" SAN UP TO WATER CLOSET
3. 3" SAN UP, 3" SAN DOWN
4. 2" SAN DOWN, 2" VENT UP
5. 3" SAN DOWN AT WATER CLOSET
6. 2" SAN UP, 2" P-TRAP TO SHOWER DRAIN AT SECOND FLOOR
7. 2" VENT UP
8. 3" VENT UP
9. 2" SAN DOWN, 2" SAN UP. SHOWER DRAIN STACK
10. LAV / SINK: 1-1/2" P-TRAP 1-1/2" SAN TO 2" WASTE STACK
11. 3" SAN DOWN, 3" P-TRAP BELOW FLOOR 2" VENT RISE AT MOP SINK
12. 2" SAN DOWN, 1-1/2" VENT RISE
13. 1-1/2" SAN UP TO SINK/LAV
14. 1-1/2" VENT UP
15. 1-1/2" SAN DOWN, 1-1/2" VENT RISE
16. 2" SAN DOWN, 2" P-TRAP IN WALL, 1-1/2" VENT RISE AT WASHING MACHINE DRAIN/SUPPLY BOX (DSB-A RECESSED IN WALL)
17. 3" SAN DOWN, 3" P-TRAP BELOW FLOOR, 2" VENT RISE AT MOP SINK
18. 2" SAN UP
19. 3" SAN (WASHING MACHINE DRAIN LINE) DOWN
20. ROLL 2" DRAIN INTO VERTICAL 3" DRAIN RISER
21. 3" VENT UP, 3" VENT DOWN
22. 2" VENT UP, 2" VENT DOWN
23. 3" SAN, ROLL DOWN INTO 3" VERTICAL SAN STACK
24. 2" SAN DOWN, 2" SAN UP
25. 1-1/2" SAN DOWN, 1-1/2" VENT RISE. PROVIDE AIR ADMITTANCE VALVE ON VENT RISER.
26. 2" VENT DOWN, 2" VENT RISE
27. 4" FLOOR SINK (FS-A), 4" P-TRAP BELOW FLOOR
28. GREASE TRAP (GT-A) RECESSED IN FLOOR COVER FLUSH WITH FINISHED FLOOR
29. 2" DRAIN HEADER BELOW 3-BAY SINK. 2" DRAIN RISERS AT EACH SINK BOWL.
30. 3" GREASE WASTE DOWN, 2" VENT RISE. OFFSET 2" VENT TO WALL. CONNECT 2" DRAIN HEADER TO 3" GREASE WASTE RISER.
31. 3" VENT DOWN, 3" VENT RISE. OFFSET AS REQUIRED TO RUN UP THRU SECOND FLOOR PARTITION.

    ALL KITCHEN EQUIPMENT REQUIRING DRAINS ARE TO BE RUN INDIRECT OVER THE NEAREST FLOOR SINK (FS-A). VERIFY IN FIELD DRAIN PIPE/TUBING SIZES WITH KITCHEN EQUIPMENT SUPPLIER.
33. 3" FLOOR SINK (FS-A), 3" P-TRAP BELOW FLOOR
34. 2" DRAIN CONNECTION AT DISHWASHER. DWV COPPER ONLY. PVC DRAIN NOT ACCEPTABLE. COORDINATE WITH KITCHEN EQUIPMENT SUPPLIER FOR DRAIN FITTING SIZES. PIPE DISHWASHER WASTE LINE INDIRECT OVER FLOOR SINK (FS-A), WITH AIR GAP
35. 1" AND 3/4" CONDENSATE DRAIN LINES FROM FREEZER AND COOLER CONDENSERS. PIPE INDIRECT OVER FLOOR AS REQUIRED
36. 1-1/2" DRAIN HEADER AT 2-BAY PREP SINK. PIPE INDIRECT OVER FLOOR SINK (FS-A)
37. 1-1/2" DRAIN HEADER BELOW HOT FOOD WELL EQUIP. PROVIDE DRAIN RISERS TO EACH WELL DRAIN CONNECTION. COORDINATE DRAIN RISER SIZE WITH KITCHEN EQUIPMENT SUPPLIER. PIPE DRAIN HEADER INDIRECT OVER FLOOR SINK (FS-A)

PERMIT SET 05-12-21

ME ENGINEERING
Mechanical/Electrical/Plumbing Consultants
MEP Projects # 200095
Seymour J. Mansfield & Associates, Inc.
412 SOUTH STATE STREET, SUITE 410
SCHENECTADY, NY 12305
518.382.0173
www.meengineering.com

DATE: 5/12/2021
REVISED:

PROJECT NO: 203095
DESIGNED BY: JJAE
DRAWN BY: JJAE
CHECKED BY: RSA
SCALE: AS NOTED
NOTES:

FIRST FLOOR SANITARY AND VENT PLUMBING PLAN

HARRIS A. SANDERS ARCHITECTS, P.C.
252 WASHINGTON AVENUE, ALBANY, NEW YORK 12210

L'DOR ADULT CARE FACILITY
156 WEST CLARKSTOWN ROAD
NEW CITY N.Y. 10956

STATE OF NEW YORK · MICHAEL K. SUNDMAN · 077887-1 · LICENSED PROFESSIONAL ENGINEER

SHEET NO.
P102
OF:

GENERAL NOTES:

A. ALL PIPING IS ABOVE THE CEILING UNLESS OTHERWISE INDICATED.

B. ALL PIPING SHALL BE INSTALLED CONCEALED UNLESS OTHERWISE INDICATED.

C. COORDINATE ALL WORK WITH OTHER TRADES PRIOR TO BEGINNING WORK.

D. ALL SANITARY PIPING SHALL SLOPE AT MINIMUM 1%.

E. ALL STORM PIPING SHALL SLOPE AT MINIMUM 2% UNLESS OTHERWISE NOTED.

F. PROVIDE LINK SEAL SEALING SLEEVES AT ALL LOCATIONS WHERE PIPING PENETRATES EXTERIOR WALLS AND FLOOR SLABS ON GRADE.

DRAWING NOTES:

1. 3" SAN DOWN AT FLOOR MOUNTED WATER CLOSET.
2. 1-1/2" SAN, 1-1/2" P-TRAP AT LAV
3. 2" SAN DOWN TO 2" P-TRAP AT SHOWER DRAIN
4. 2" SAN DOWN, 1-1/2" VENT RISE AT SINK
5. 4" VENT UP TO 4" VENT THRU ROOF. SEE ROOF PLUMBING PLAN, P104, FOR CONTINUATION
6. 3" SAN DOWN, 2" VENT RISE
7. 3" VENT DOWN, 3" VENT RISE
8. 2" VENT DOWN, 2" VENT RISE
9. 3" SAN DOWN, 3" VENT RISE
10. 2" SAN DOWN, 2" VENT RISE
11. WASHING MACHINE DRAIN/SUPPLY BOX (WMB) RECESSED IN WALL. 2" P-TRAP MOUNTED 48" BELOW WMB. 2" STANDPIPE UP TO WMB CONNECTION. SEE DETAIL ON DRAWING P301.
12. 1-1/2" VENT DOWN, 1-1/2" VENT RISE

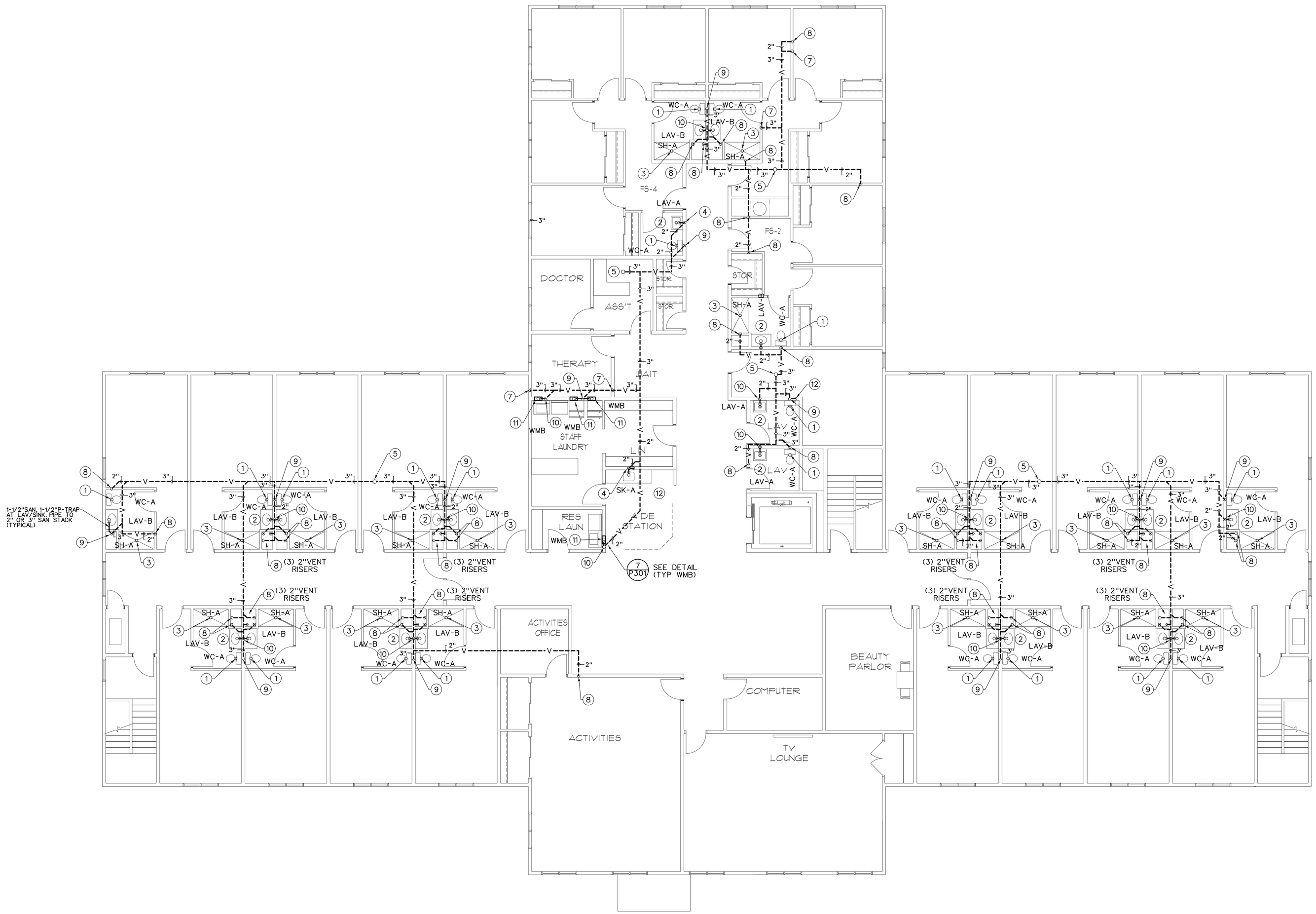

SECOND FLOOR SANITARY AND VENT PLUMBING PLAN (1 / P103)

SCALE:1/8"=1'-0"

NORTH

PERMIT SET 05-12-21

ME ENGINEERING
Mechanical/Electrical/Plumbing Consultants
MEP Projects # 200095
Steven Michael Sunman, President & Principal
42 Ten Eyck Street | Suite 4-A
Schenectady, NY 12305
518.512.5763 | 518.512.5771
www.meengineering.com

DATE: 5/12/2021
REVISED:

PROJECT NO: 203095
DESIGNED BY: JME
DRAWN BY: JME
CHECKED BY: RSA
SCALE: AS NOTED
NOTES:

SECOND FLOOR SANITARY AND VENT PLUMBING PLAN

HARRIS A. SANDERS ARCHITECTS, P.C.
252 WASHINGTON AVENUE, ALBANY, NEW YORK 12210

L'DOR ADULT CARE FACILITY
156 WEST CLARKSTOWN ROAD
NEW CITY N.Y. 10956

STATE OF NEW YORK · MICHAEL K. SUNMAN · 077887-1 · LICENSED PROFESSIONAL ENGINEER

SHEET NO.
P103

GENERAL NOTES:

A. ALL PIPING IS ABOVE THE CEILING UNLESS OTHERWISE INDICATED.

B. ALL PIPING SHALL BE INSTALLED CONCEALED UNLESS OTHERWISE INDICATED.

C. COORDINATE ALL WORK WITH OTHER TRADES PRIOR TO BEGINNING WORK.

D. ALL SANITARY PIPING SHALL SLOPE AT MINIMUM 1%.

E. ALL STORM PIPING SHALL SLOPE AT MINIMUM 2% UNLESS OTHERWISE NOTED.

F. PROVIDE LINK SEAL SEALING SLEEVES AT ALL LOCATIONS WHERE PIPING PENETRATES EXTERIOR WALLS AND FLOOR SLABS ON GRADE.

DRAWING NOTES:

(1) 4" VENT RISE. TERMINATE MINIMUM 18" ABOVE ROOF LINE.
4" VENT DOWN. REFER TO DWG. P103 FOR CONTINUATION

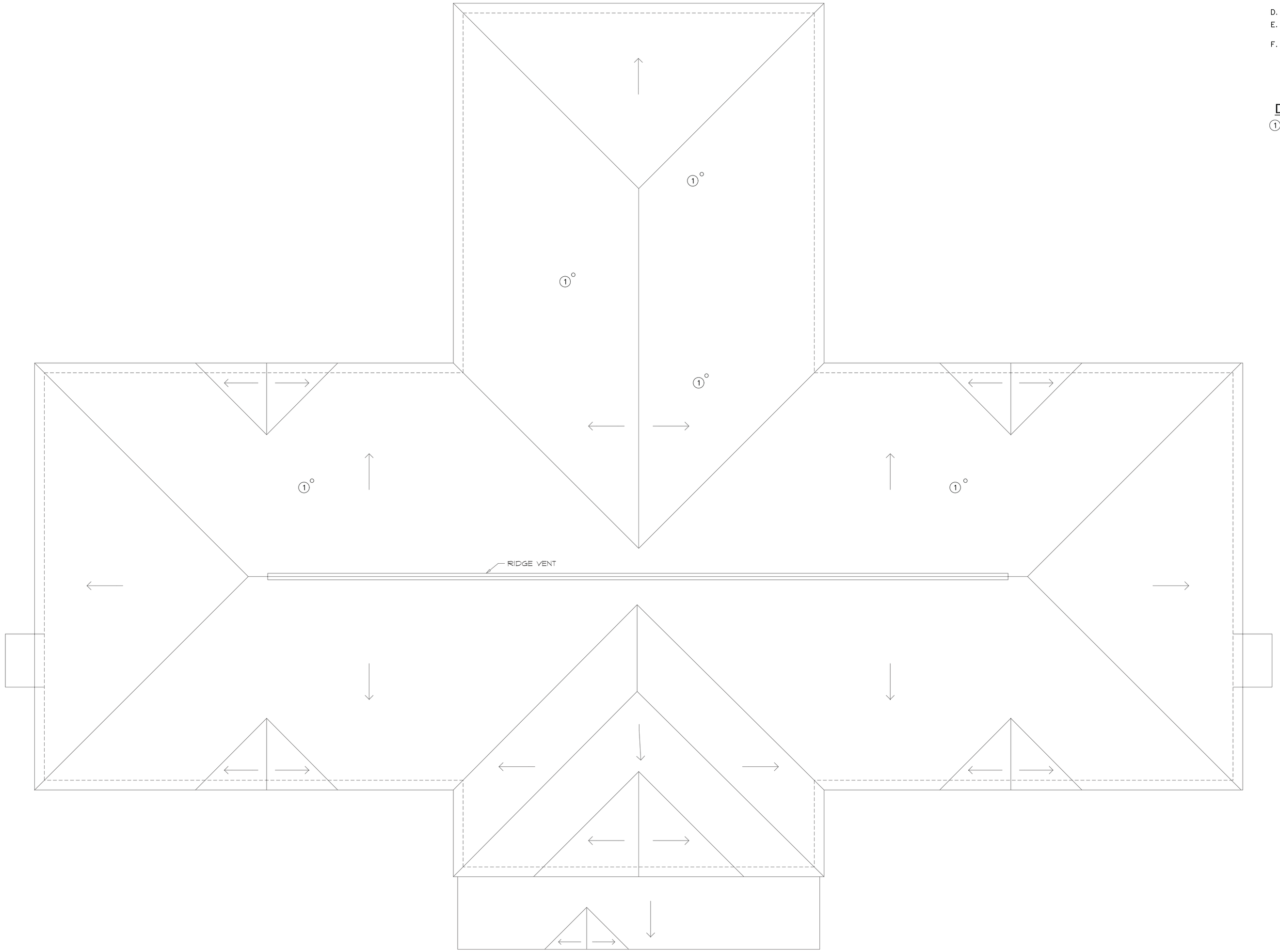

ROOF PLAN (1 / P104)
SCALE: 1/8"=1'-0"

PERMIT SET 05-12-21

ME ENGINEERING
Mechanical/Electrical/Plumbing Consultants
MEP Projects © 2020
Steven J. Ostrander & Associates, P.C.
412 SOUTH STREET, SUITE 101
GLENS FALLS, N.Y. 12801
518.792.1171
www.meengineering.com

DATE: 5/12/2021
REVISED:

PROJECT NO: 203085
DESIGNED BY: JJAE
DRAWN BY: JJAE
CHECKED BY: RSA
SCALE: AS NOTED
NOTES:

ROOF PLUMBING PLAN

HARRIS A. SANDERS ARCHITECTS, P.C.
252 WASHINGTON AVENUE, ALBANY, NEW YORK 12210

L'DOR ADULT CARE FACILITY
156 WEST CLARKSTOWN ROAD
NEW CITY N.Y. 10956

STATE OF NEW YORK · MICHAEL A. SUNDRAN · 077887-1 · LICENSED PROFESSIONAL ENGINEER

SHEET NO.
P104

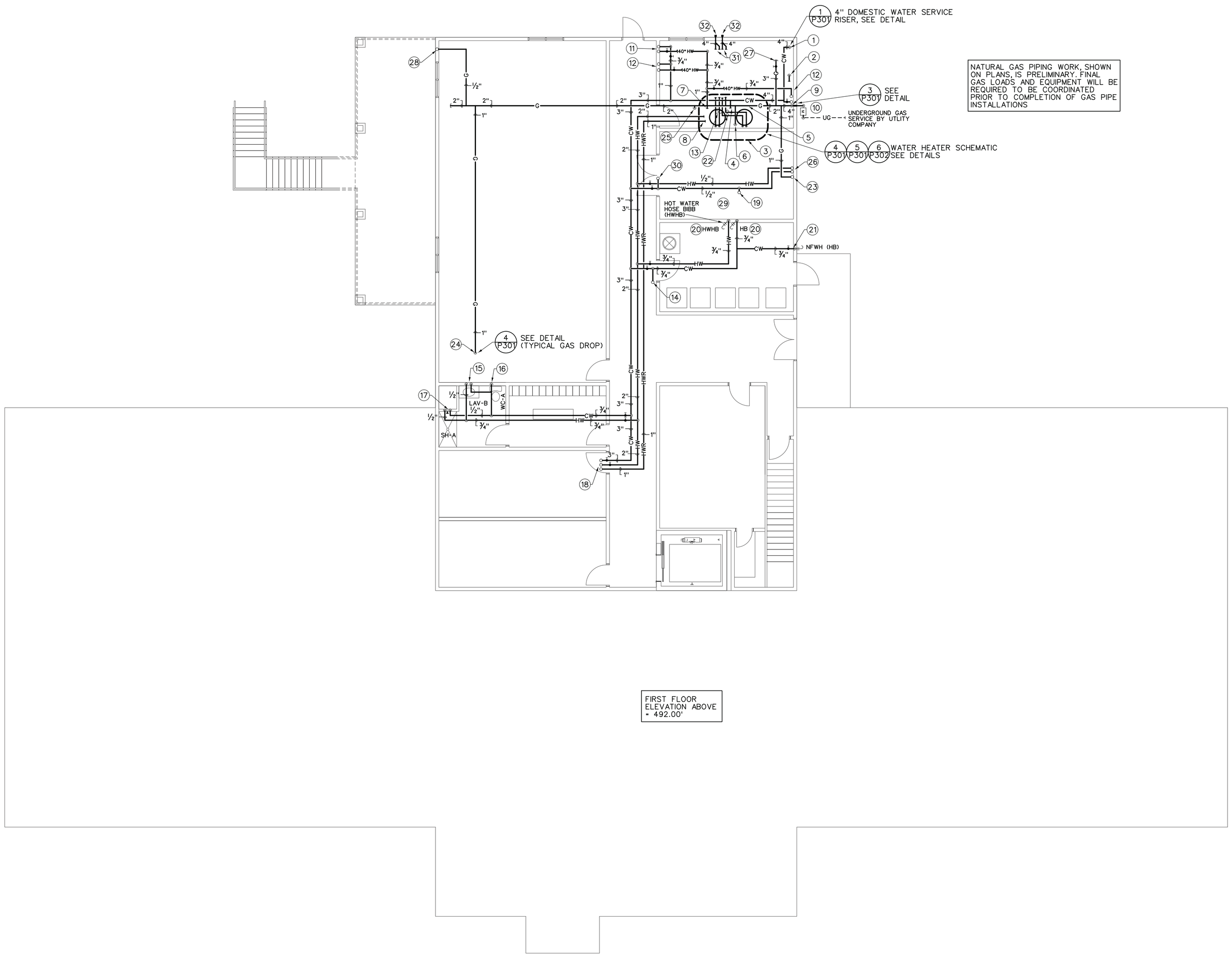

NATURAL GAS PIPING WORK, SHOWN ON PLANS, IS PRELIMINARY. FINAL GAS LOADS AND EQUIPMENT WILL BE REQUIRED TO BE COORDINATED PRIOR TO COMPLETION OF GAS PIPE INSTALLATIONS

GENERAL NOTES:

A. ALL PIPING IS ABOVE THE CEILING UNLESS OTHERWISE INDICATED.

B. ALL PIPING SHALL BE INSTALLED CONCEALED UNLESS OTHERWISE INDICATED.

C. COORDINATE ALL WORK WITH OTHER TRADES PRIOR TO BEGINNING WORK.

D. ALL SANITARY PIPING SHALL SLOPE AT MINIMUM 1%.

E. ALL STORM PIPING SHALL SLOPE AT MINIMUM 2% UNLESS OTHERWISE NOTED.

F. PROVIDE LINK SEAL SEALING SLEEVES AT ALL LOCATIONS WHERE PIPING PENETRATES EXTERIOR WALLS AND FLOOR SLABS ON GRADE.

DRAWING NOTES:

1. 4" WATER SERVICE DOWN, 4" WATER SERVICE RISE PROVIDE 4"OS&Y VALVE, DRAIN VALVE, AND PRESSURE GAUGE IN VERTICAL
2. 4" FIRE PROTECTION WATER SERVICE RISER FIRE PROTECTION BY SPRINKLER CONTRACTOR
3. DOMESTIC HOT WATER SYSTEM, SEE LARGE SCALE PLAN 2/P201 THIS SHEET. SEE ELEVATION PIPING DETAIL DWG. P601
4. 2-1/2" CW SUPPLY TO DOMESTIC HOT WATER SYSTEM
5. 1-1/2" GAS SUPPLY TO WATER HEATERS
6. 1-1/2" GAS SUPPLY HEADER/DROP TO WATER HEATERS
7. 1" 140°HW FROM WATER HEATERS
8. 2" HW, 1" HWR SEE WATER HEATER DETAIL P601 FOR CONTINUATION
9. 4" GAS RISE INSIDE WALL, 4" GAS VALVE IN VERTICAL PROVIDE 6" PIPE SLEEVE THRU WALL
10. GAS METER, PROJECTED GAS DEMAND 2500 CFH
11. 3/4" 140°HW, 3/4" CW UP TO DISHWASHER
12. 3/4" 140°HW, 3/4" CW UP TO KITCHEN FAUCET
13. 1/2" CW, 1/2" HW UP TO HANDWASH SINK
14. 1/2" CW UP TO ICE MACHINE
15. 1/2" CW, 1/2" HW DROP TO LAV
16. 1/2" CW DROP TO WATER CLOSET
17. 1/2" CW, 1/2" HW DROP TO SHOWER VALVE
18. 3" CW, 2" HW, 1" HWR UP, SEE DWG P202 FOR CONTINUATION. PROVIDE VALVES IN RISERS OR ADJACENT TO ELBOW UP
19. 3/4" CW, 3.4" HW DROPS TO WALL HYDRANTS
20. PROVIDE CW AND HW WALL HYDRANTS 36" ABOVE FINISHED FLOOR
21. 3/4" CW DROP TO NON FREEZE TYPE, EXTERIOR WALL HYDRANT (NFWH). INSTALL NFWH 24" ABOVE GRADE
22. 1/2" CW, 1/2"140°HW UP TO PREP SINK
23. 1" GAS UP TO RANGE
24. 1" GAS DROP TO FURNACE. 1" GAS VALVE 1" UNION AND DRIP LEG
25. 3/4" GAS DROP, 3/4" GAS VALVE, 3/4" UNION AND DRIP LEG TO MAU
26. 1/2" CW, HW UP TO POT FILLER FAUCET
27. 3" CAPPED GAS LEG WITH 3" GAS VALVE, FUTURE EMERGENCY GENERATOR CONNECTION
28. 1/2" GAS UP TO OUTDOOR EQUIPMENT
29. 1/2" CW UP TO HOT WELL EQUIPMENT
30. 1/2" CW UP TO COFFEE BREWING EQUIPMENT
31. 4" PVC INTAKE, 4" PVC EXHAUST FROM WATER HEATER
32. 4" PVC TERMINATION KIT THRU WALL. PROVIDE COMBINATION INTAKE AND EXHAUST FITTING PER WATER HEATER MANUFATURER REQUIREMENTS

NORTH

BASEMENT DOMESTIC WATER AND GAS PLUMBING PLAN (1 / P201)

SCALE: 1/8"=1'-0"

PERMIT SET 05-12-21

ME ENGINEERING
Mechanical/Electrical/Plumbing Consultants
MEP Projects # 200095
Seven Hanover Square, 4th Floor
New York, New York 10004
212.514.7400 | 888.414.
212.514.7410 | 888.414.
SCHEMBECHLER 1999
www.meengineering.com

DATE: 5/12/2021
REVISED:

PROJECT NO: 203095
DESIGNED BY: JJE
DRAWN BY: JJE
CHECKED BY: RSA
SCALE: AS NOTED
NOTES:

BASEMENT DOMESTIC WATER AND GAS PLUMBING PLAN

HARRIS A. SANDERS ARCHITECTS, P.C.
252 WASHINGTON AVENUE, ALBANY, NEW YORK 12210

L'DOR ADULT CARE FACILITY
156 WEST CLARKSTOWN ROAD
NEW CITY N.Y. 10956

STATE OF NEW YORK · MICHAEL K. SULLIVAN · 077887-1 · LICENSED PROFESSIONAL ENGINEER

SHEET NO.
P201
OF:

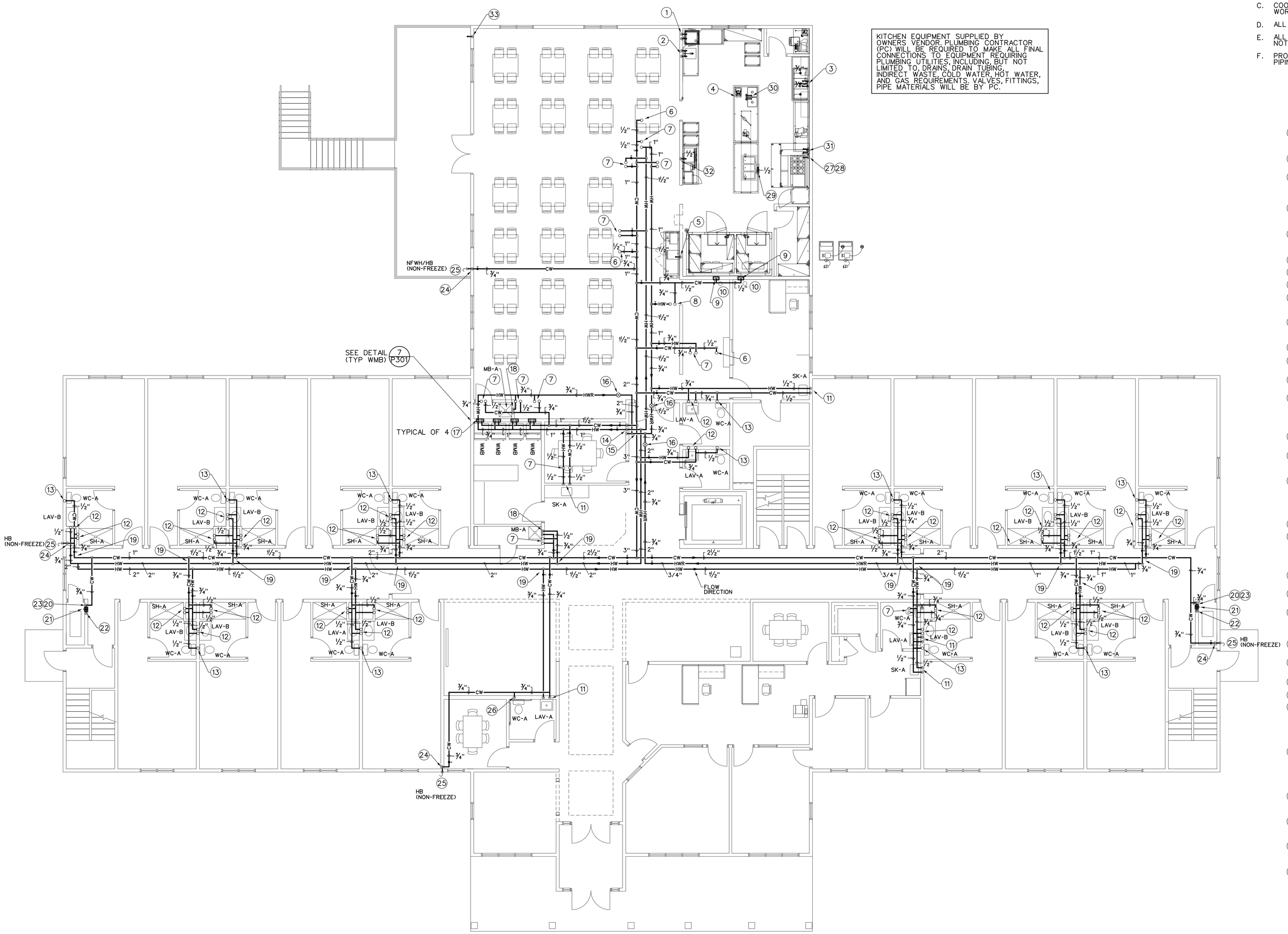

FIRST FLOOR DOMESTIC WATER AND GAS PLUMBING PLAN (1 / P202)

SCALE: 1/8" = 1'-0"

NORTH

GENERAL NOTES:

A. ALL PIPING IS ABOVE THE CEILING UNLESS OTHERWISE INDICATED.

B. ALL PIPING SHALL BE INSTALLED CONCEALED UNLESS OTHERWISE INDICATED.

C. COORDINATE ALL WORK WITH OTHER TRADES PRIOR TO BEGINNING WORK.

D. ALL SANITARY PIPING SHALL SLOPE AT MINIMUM 1%.

E. ALL STORM PIPING SHALL SLOPE AT MINIMUM 2% UNLESS OTHERWISE NOTED.

F. PROVIDE LINK SEAL SEALING SLEEVES AT ALL LOCATIONS WHERE PIPING PENETRATES EXTERIOR WALLS AND FLOOR SLABS ON GRADE.

DRAWING NOTES:

1. 3/4" CW, 3/4" 140° HW DOWN
   3/4" CW, 3/4" 140° HW RISE
   DISHWASHER CONNECTION
2. 3/4" CW, 3/4" 140° HW DOWN
   3/4" CW, 3/4" 140° HW RISE
3. 3/4" CW, 3/4" 140° HW DOWN
   3/4" CW, 3/4" 140° HW RISE
   3-BAY SINK FAUCET CONNECTIONS
   PROVIDE BALL VALVES ON RISERS
4. 1/2" CW, 1/2" HW DOWN,
   1/2" CW, 1/2" HW RISE TO
   HANDSINK
5. 1/2" CW DOWN, 1/2" CW RISE,
   1/2" IN-LINE BACKFLOW DEVICE
   AT ICE MACHINE CONNECTION
6. 1/2" CW UP
7. 1/2" CW, 1/2" HW UP
8. 3/4" CW, 3/4" HW UP
9. 1/2" CW DROP TO RECESSED VALVE BOX. PROVIDE TUBING CONNECTIONS TO WATER COOLER EQUIPMENT
10. RECESSED VALVE BOX, 1/2" QUARTER TURN BALL VALVE MOUNTED TO WALL BOX ASSEMBLY
11. 1/2" CW, 1/2" HW DROP
12. 1/2" CW, 1/2" HW UP TO SECOND FLOOR
    1/2" CW, 1/2" HW DROP TO FIXTURE
13. 1/2" CW UP TO SECOND FLOOR
    1/2" CW DROP TO WATER CLOSET
14. MAIN DOMESTIC WATER RISER ASSEMBLY
    3" CW RISE, 3" CW DOWN, 2" HW RISE, 2" HW DOWN, 1" HWR RISE, 1" HWR DOWN. SEE BASEMENT PLAN P201 FOR CONTINUATION OF MAIN RISERS
15. 1" HWR AND 3/4" HWR DROPS TO 1" HWR HEADER.
16. THERMOSTATIC TYPE BALANCING VALVE (TB-1) PROVIDE PIPE CONNECTIONS PER PIPE SIZES SHOWN FLOOR PLAN.
17. RECESSED WASHING MACHINE DRAIN/SUPPLY BOX (WSB). 1/2" CW, 1/2" HW DROP TO WSB. QUARTER TURN BALL VALVES MOUNTED IN BOX ASSEMBLY. GARDEN HOSE TYPE CONNECTIONS TO ACCEPT WASHING MACHINE CW, HW HOSES.
18. 1/2" CW, 1/2" HW DROP TO MOP SINK FAUCET
19. 3/4" CW, 3/4" HW BRANCH LINES TO APARTMENT BATHROOMS ON FIRST AND SECOND FLOORS. PROVIDE 3/4" BALL VALVES ON EACH BRANCH LINE (TYPICAL FOR TAKEOFFS FROM DOMESTIC WATER MAINS/PIPING.
20. PROVIDE 8"x 8" ACCESS PANEL ON WALL MOUNT
    3/4" BALL VALVE IN WALL BEHIND ACCESS PANEL
21. 3/4" CW DROP TO VALVE. FLUSHING VALVE WILL BE NORMALLY CLOSED.
22. 3/4" CW DOWN TO BELOW SLAB. SEE DWG. P100 FOR CONTINUATION. 3/4" UNDERGROUND CW SUPPLY TO BE CONNECTED TO TOP OF SANITARY MAIN BELOW FLOOR.
23. 3/4" INLINE BACKFLOW PREVENTER FOR SANITARY FLUSH LINE SUPPLY. MOUNT ABOVE CEILING.
24. 3/4" CW DROP TO EXTERIOR NON FREEZE WALL HYDRANT (NFWH)
25. NFWH (HB) MOUNT ON EXTERIOR WALL AT 24" AB GRADE.
26. 1/2" CW DROP TO WATER CLOSET
27. 1" GAS DOWN, 1" GAS RISE BEHIND RANGE. PROVIDE 1" SOLENOID GAS VALVE IN RISER. COORDINATE SOLENOID VALVE ELECTRICAL INTERFACE WITH EXHAUST HOOD FIRE SUPPRESSION SYSTEM. COORDINATE WITH CAPTIVEAIRE HOOD EQUIPMENT SUPPLIER.
28. 1" GAS CONNECTION TO RANGE. PROVIDE MANUAL SHUT OFF VALVE AND SAFETY TYPE FLEX CONNECTOR ON HORIZONTAL TAKEOFF NIPPLE.

    1/2" CW DOWN, 1/2" CW RISE WITH VALVE IN VERTICAL AT HOT FOOD WELL EQUIPMENT
30. 1/2" CW, 1/2" 140° HW DOWN, 1/2" CW, 1/2" 140° HW RISE AT 2-BAY PREP SINK. FINAL CONNECTION TO SINK FAUCET BY PC.
31. 1/2" CW, 1/2" 140° HW DOWN, 1/2" CW, 1/2" 140° HW RISE AT POT-FILLER FAUCET. FINAL CONNECTION TO FAUCET BY PC.
32. 1/2" CW DOWN, 1/2" CW RISE TO COFFEE BREWING EQUIPMENT. PROVIDE SHUT OFF VALVE AND FITTINGS REQUIRED FOR CONNECTION TO EQUIPMENT.
33. 1/2" GAS DOWN, 1/2" GAS RISE. 1/2" GAS OUT THRU WALL CONNECTION FOR FUTURE GAS FIRED OUTDOOR EQUIP. CAP AS REQUIRED.

PERMIT SET 05-12-21

ME ENGINEERING
Mechanical/Electrical/Plumbing Consultants
M/E Project # 200095
Steven J. Ostrowski & Associates, Inc.
42-23 24th STREET, SUITE 4F
LONG ISLAND CITY, NEW YORK 11101
718.361.0375
www.meengineering.com

DATE: 5/12/2021
REVISED:

PROJECT NO: 203095
DESIGNED BY: JJAE
DRAWN BY: JJAE
CHECKED BY: RSA
SCALE: AS NOTED
NOTES:

FIRST FLOOR DOMESTIC WATER AND GAS PLUMBING PLAN

HARRIS A. SANDERS ARCHITECTS, P.C.
252 WASHINGTON AVENUE, ALBANY, NEW YORK 12210

L'DOR ADULT CARE FACILITY
156 WEST CLARKSTOWN ROAD
NEW CITY N.Y. 10956

STATE OF NEW YORK · RICHARD A. STUNZENAS · 077887-1 · LICENSED PROFESSIONAL ENGINEER

SHEET NO.
P202
OF:

GENERAL NOTES:

A. ALL PIPING IS ABOVE THE CEILING UNLESS OTHERWISE INDICATED.

B. ALL PIPING SHALL BE INSTALLED CONCEALED UNLESS OTHERWISE INDICATED.

C. COORDINATE ALL WORK WITH OTHER TRADES PRIOR TO BEGINNING WORK.

D. ALL SANITARY PIPING SHALL SLOPE AT MINIMUM 1%.

E. ALL STORM PIPING SHALL SLOPE AT MINIMUM 2% UNLESS OTHERWISE NOTED.

F. PROVIDE LINK SEAL SEALING SLEEVES AT ALL LOCATIONS WHERE PIPING PENETRATES EXTERIOR WALLS AND FLOOR SLABS ON GRADE.

DRAWING NOTES:

1. 1/2" CW DOWN, 1/2" CW RISE
   1/2" CW AT WATER CLOSET
2. 1/2" CW DOWN, 1/2" HW DOWN,
   1/2" CW RISE, 1/2" HW RISE
   AT LAVATORY
3. 1/2" CW DOWN, 1/2" HW DOWN,
   1/2" CW RISE, 1/2" HW RISE
   TO SHOWER VALVE
4. 1/2" CW DOWN, 1/2" HW DOWN,
   1/2" CW RISE, 1/2" HW RISE
   AT SINK
5. 1/2" CW DOWN, 1/2" HW DOWN,
   1/2" CW RISE, 1/2" HW RISE
   TO WASHING MACHINE DRAIN/
   SUPPLY BOX RECESSED IN WALL
6. 1/2" CW DOWN, 1/2" CW RISE AT WATER CLOSET. PROVIDE PIPING, FITTINGS AND STOPS AS REQUIRED FOR BACK TO BACK WATER CLOSET CONNECTIONS
7. 1/2" CW DOWN, 1/2" HW DOWN, 1/2" CW RISE, 1/2" HW RISE AT LAVATORY. PROVIDE PIPING, FITTINGS AND STOPS AS REQUIRED FOR BACK TO BACK LAVATORY CONNECTIONS
8. PROVIDE CW AND HW WATER RISERS AS NEEDED FOR BEAUTY SHOP PLUMBING FIXTURES REQUIRING PLUMBING AND DRAIN CONNECTIONS

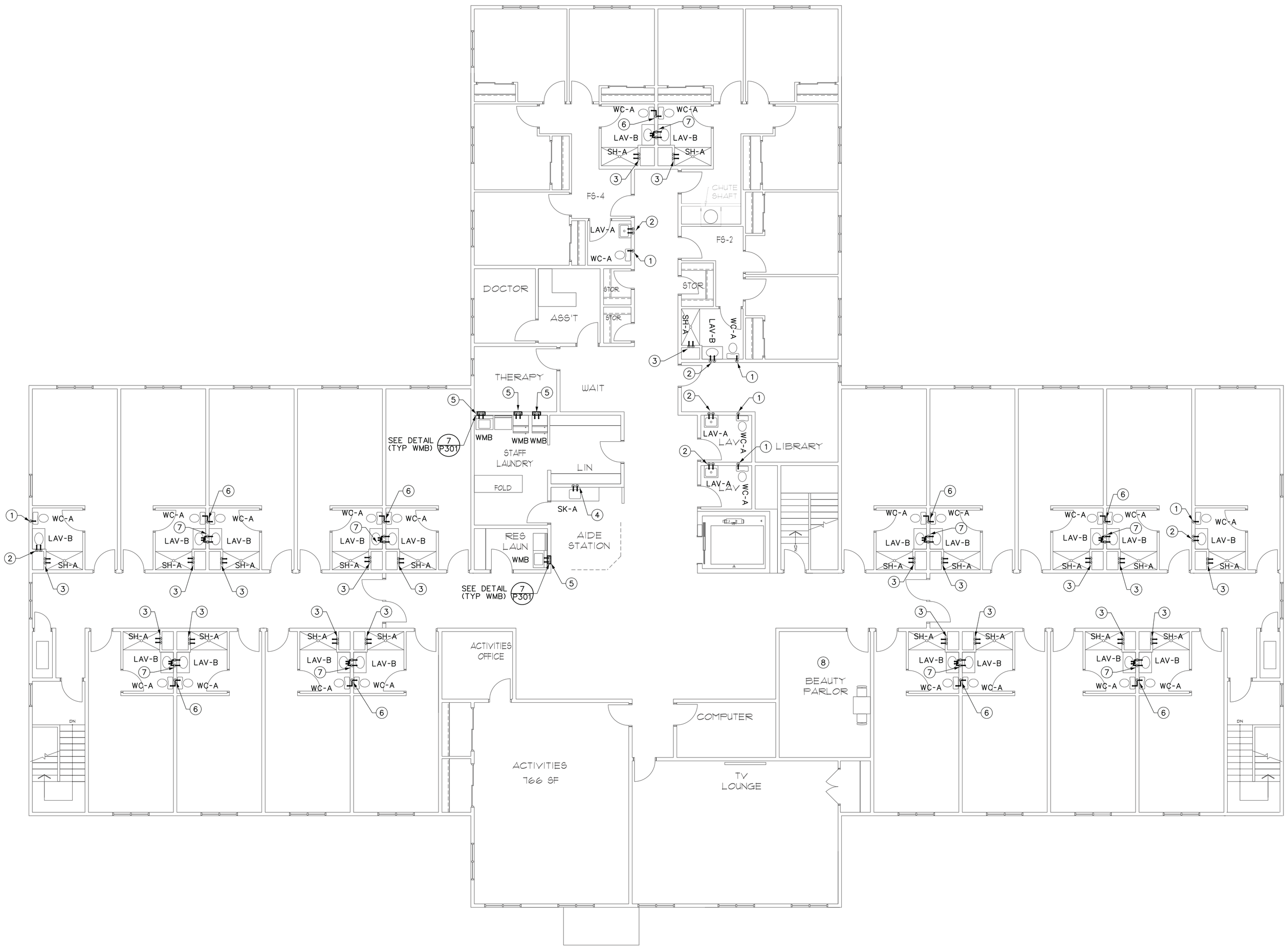

SECOND FLOOR DOMESTIC WATER AND GAS PLUMBING PLAN (1 / P203)

SCALE: 1/8"=1'-0"

NORTH

PERMIT SET 05-12-21

ME ENGINEERING
Mechanical/Electrical/Plumbing Consultants
ME Project # 200095
Seven Hanover Square, 8th Floor
New York, New York 10004
212 943 0963 / 943 0963 (F)
212 943 0963 / 943 0963 (F)
SCHENECTADY, NY 12305
www.meengineering.com

DATE: 5/12/2021
REVISED:

PROJECT NO: 203095
DESIGNED BY: JME
DRAWN BY: JME
CHECKED BY: RSA
SCALE: AS NOTED
NOTES:

SECOND FLOOR DOMESTIC WATER AND GAS PLUMBING PLAN

HARRIS A. SANDERS ARCHITECTS, P.C.
252 WASHINGTON AVENUE, ALBANY, NEW YORK 12210

L'DOR ADULT CARE FACILITY
156 WEST CLARKSTOWN ROAD
NEW CITY N.Y. 10956

STATE OF NEW YORK
MICHAEL K. SUNDAY
077887-1
LICENSED PROFESSIONAL ENGINEER

SHEET NO.
P203

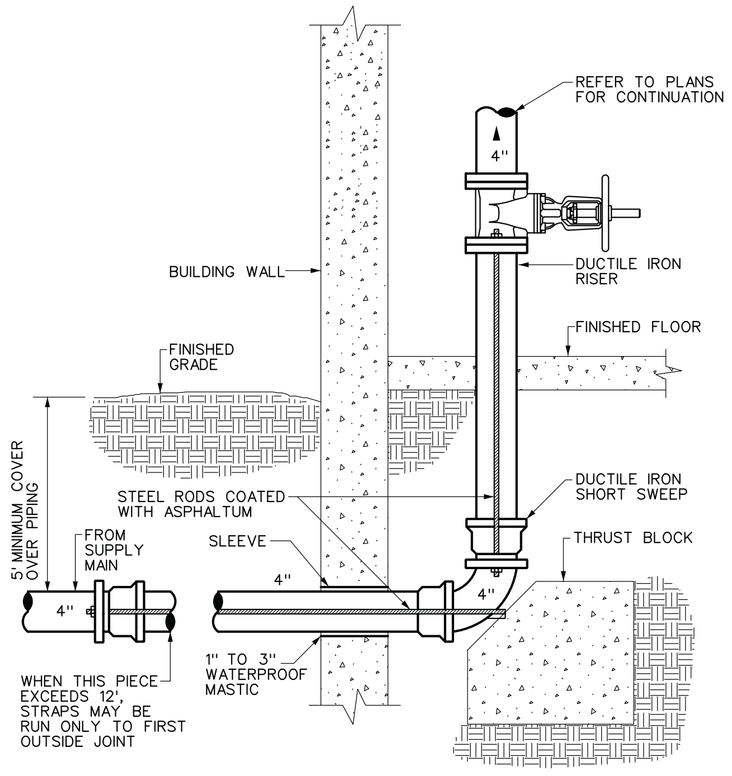

1 P301 WATER SERVICE ENTRANCE DETAIL (DOMESTIC)

SCALE: NONE

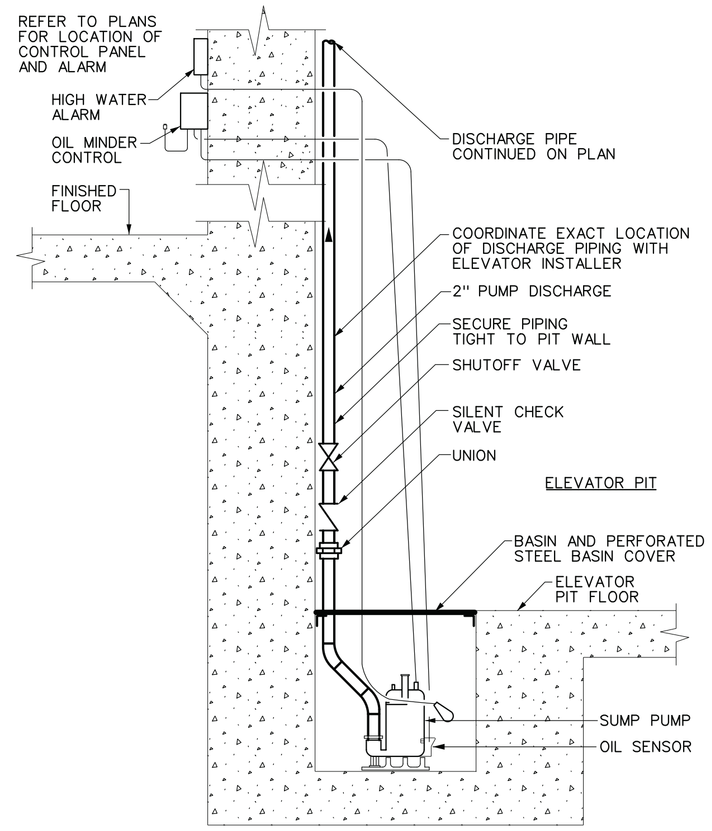

2 P301 ELEVATOR SUMP PUMP DETAIL

SCALE: NONE — BASIN IN SHAFT

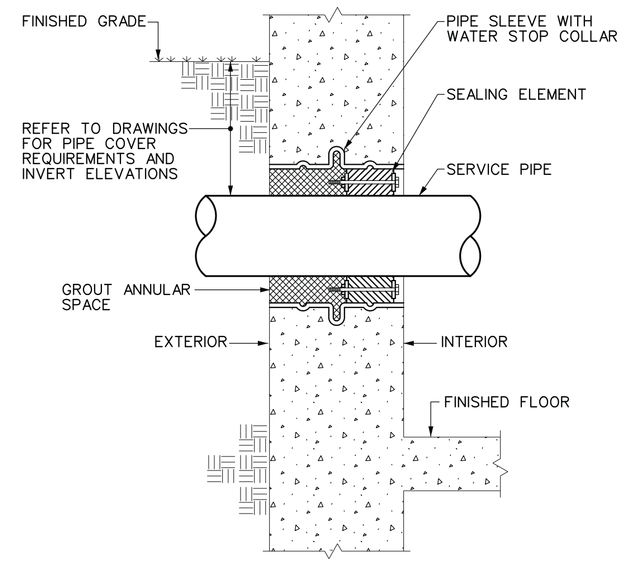

3 P301 PIPE THRU NEW EXTERIOR WALL DETAIL

SCALE: NONE

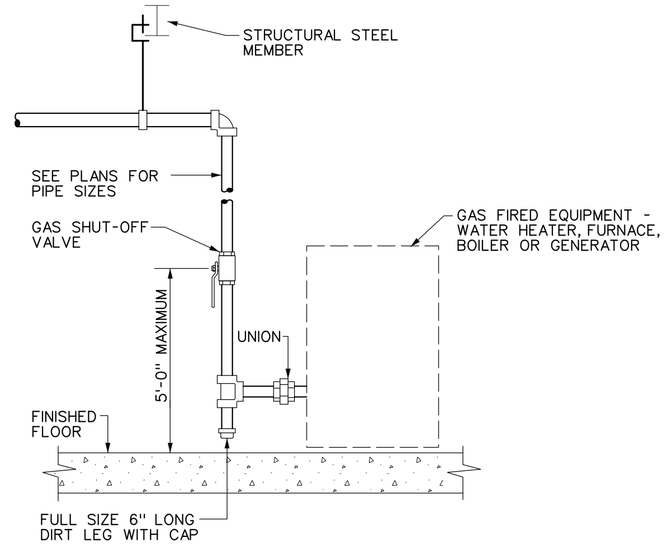

DETAIL NOTES:

A. PROVIDE SHUT-OFF VALVE, DIRT LEG AND UNION AT EACH GAS CONNECTION ON EACH PIECE OF EQUIPMENT.

B. VERIFY CONNECTION SIZES, QUANTITIES AND LOCATIONS WITH M.C.

C. P.C. IS RESPONSIBLE FOR FINAL CONNECTION.

4 P301 GAS EQUIPMENT CONNECTION DETAIL

SCALE: NONE

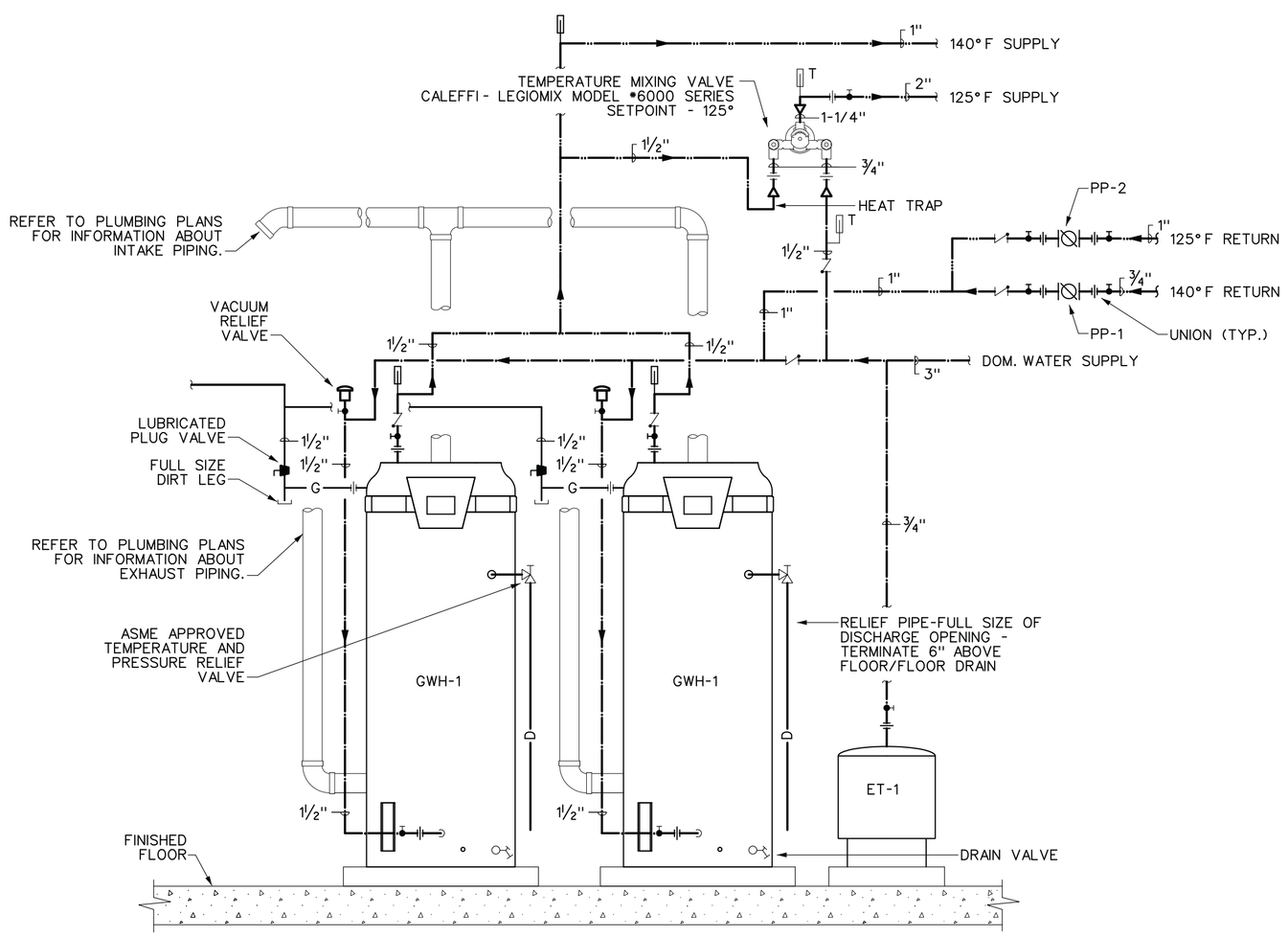

DETAIL NOTES:

A. PROVIDE PIPE NIPPLE THRU EQUIPMENT CASE. CSST & FLEX CONNECTORS SHALL NOT EXTEND THRU EQUIPMENT CASE.

B. PROVIDE SHUT-OFF VALVE AND UNION AT EACH SUPPLY PIPING CONNECTION.

C. P.C. IS RESPONSIBLE FOR FINAL CONNECTIONS

D. THIS DETAIL IS GENERIC. WATER HEATER MFRS. INSTRUCTIONS ARE TO BE FOLLOWED WHERE THEY DIFFER FROM THESE INSTRUCTIONS.

E. COORDINATE WITH STRUCTURAL FOR EQUIPMENT PAD SIZES.

5 P301 GWH-1&2 WATER HEATER DETAIL

SCALE: NONE

LINT INTERCEPTOR SCHEDULE

FLOW GPM	NO. MACH.	IN/OUT SIZE	A	B	C	D	E	F	G	H MIN.	ZURN MODEL
70	7	3"	25"	25"	20"	13½"	0"	25"	6½"	SEE P100	Z-1185

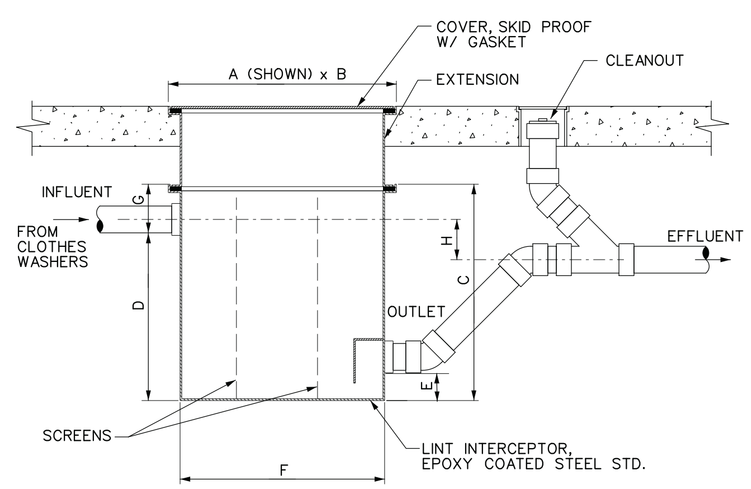

DETAIL NOTES:

A. INTERCEPTOR EXTENSION - PROVIDE WHERE REQUIRED

B. VENTING - PROVIDE ON MFRS. INTERCEPTOR MODELS WITH VENT CONNECTIONS

C. FLUSH PIPING FROM WASHING MACHINE FITTINGS TO INTERCEPTOR, CLEAN SCREENS AND FILL WITH CLEAN WATER PRIOR TO TURNING OVER TO OWNER.

6 P301 LINT INTERCEPTOR DETAIL

SCALE: NONE — BASEMENT MAINTENANCE, RECESSED

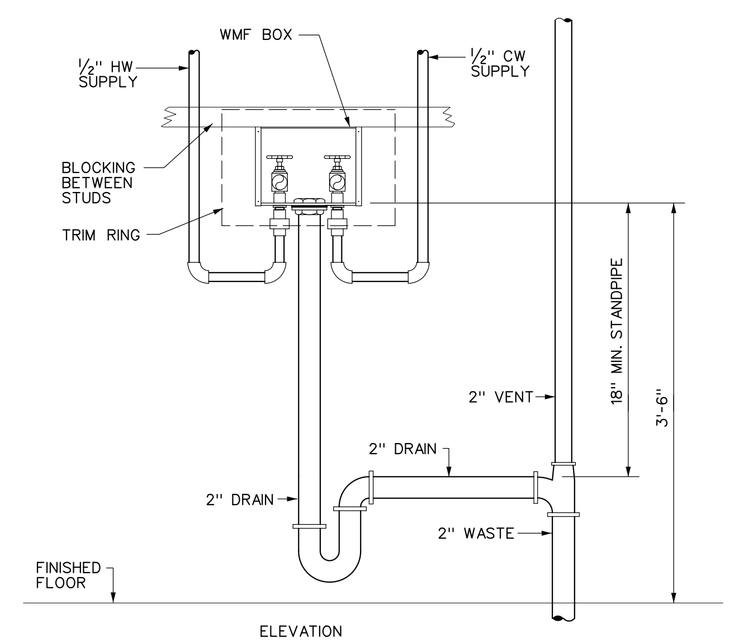

DETAILS NOTES:

A. PROVIDE BLOCKING IN WALL FOR WMB BOX

B. COORDINATE MOUNTING HEIGHT WITH CUTSHEETS OR EQUIPMENT

C. PROVIDE FIRE RATED WMB BOXES IN ALL FIRE RATED WALLS AND/OR PARTITIONS

D. PROVIDE ONE PAIR OF SUPPLY HOSES WITH EACH WMB. HOSES SHALL BE BURST RESISTANT TYPE WITH S.S. BRAID OVER RUBBER HOSE

7 P301 WASHING MACHINE BOX INSTALLATION DETAIL

SCALE: NONE — WMB , SEE PLANS FOR LOCATIONS (RECESSED IN WALLS)

PERMIT SET 05-12-21

ME ENGINEERING
Mechanical/Electrical/Plumbing Consultants
MEP Projects # 200095
Seven Chimney Corners Lane
Rensselaer, New York 12144
(518) 674-2700 / (518) 674-2711
SCHENECTADY, NY 12305
www.meengineering.com

DATE: 5/12/2021
REVISED:

PROJECT NO: 203095
DESIGNED BY:
DRAWN BY:
CHECKED BY: RSA
SCALE: AS NOTED
NOTES:

PLUMBING DETAILS

HARRIS A. SANDERS ARCHITECTS, P.C.
252 WASHINGTON AVENUE, ALBANY, NEW YORK 12210

L'DOR ADULT CARE FACILITY
156 WEST CLARKSTOWN ROAD
NEW CITY N.Y. 10956

STATE OF NEW YORK — MICHAEL A. JOHNSON — 077887-1 — LICENSED PROFESSIONAL ENGINEER

SHEET NO.
P301

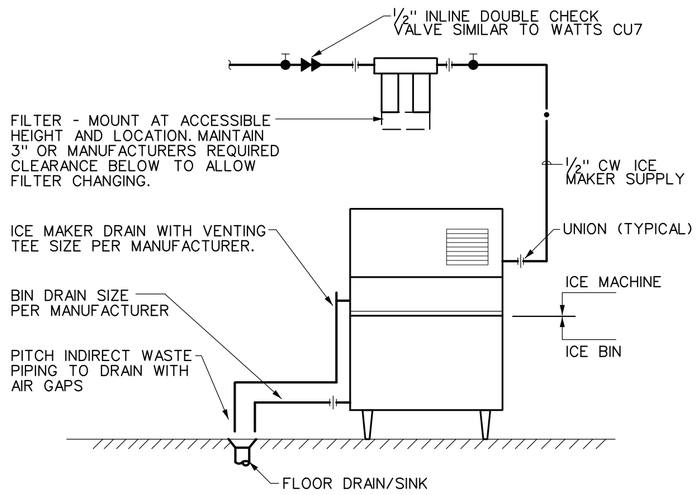

DETAIL NOTES:

A. PROVIDE DRAINS TO NEAREST FLOOR DRAIN/SINK FROM ICE MAKER SUMP, ICE BIN AND BACKFLOW PREVENTER. TERMINATE PIPING AT 1" ABOVE DRAIN.

B. PITCH INDIRECT WASTE PIPING 1/4" PER FOOT MINIMUM.

C. CONNECTIONS ARE DIAGRAMATIC AND SHOWN ON SIDES OF ICE MACHINE FOR CLARITY. THEY WILL NORMALLY BE ON THE BACK OF THE MACHINE. COORDINATE FINAL POINTS OF CONNECTION WITH THE MANUFACTURER.

D. INSULATE SUPPLY AND DRAIN PIPING. COVER INSULATION WITH JACKET.

1 / P302 **ICE MACHINE CONNECTION DETAIL**

SCALE: NONE — AIR COOLED ICE MACHINE

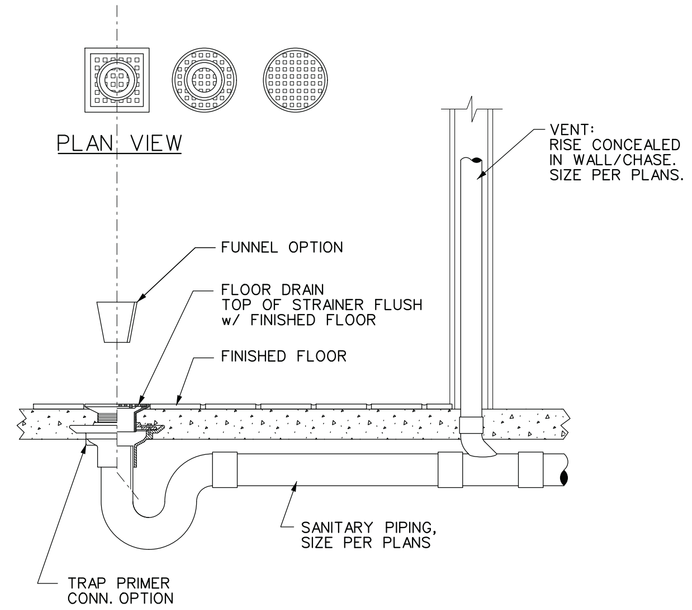

DETAIL NOTES:

A. SEE SPECIFICATIONS FOR:
GRATE PATTERN - ROUND, SQUARE
B. OPTIONS - FUNNEL

C. SEE ARCHITECTURAL PLANS FOR FLOOR FINISHES AND SLOPES

D. DESIGN BASIS: J.R. SMITH #2010
ROUND TOP, NICKEL BRONZE RIM AND ADJUSTABLE STRAINER

NEW 2/04/10 15B450...

2 / P302 **FLOOR DRAIN DETAIL**

SCALE: NONE

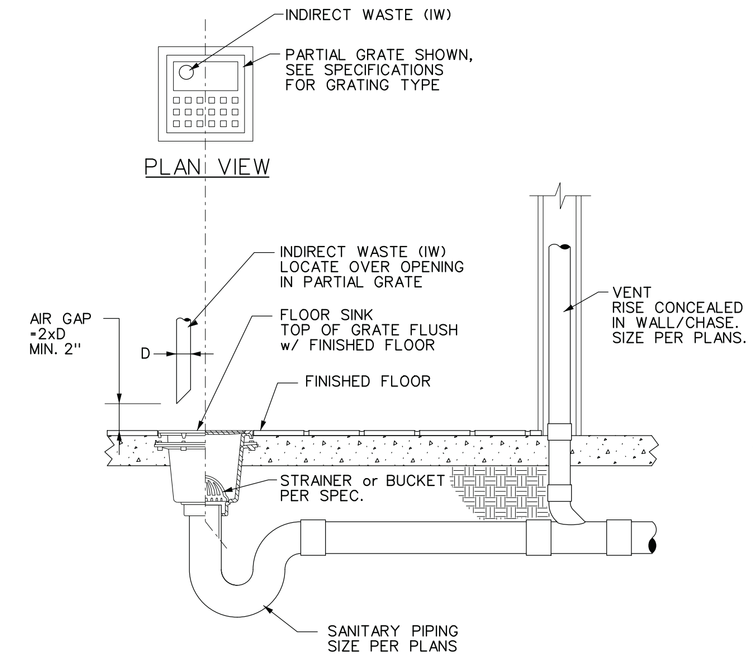

DETAIL NOTES:

A. SEE SPECIFICATIONS FOR:
GRATE PATTERN - 1/2 , 3/4 OR FULL
OPTIONS - BEE HIVE STRAINER, SEDIMENT BUCKET

B. SEE ARCHITECTURAL PLANS FOR FLOOR FINISHES AND SLOPES

C. DESIGN BASIS: J.R. SMITH, SQUARE TOP, NICKEL BRONZE RIM AND SECURED GRATE #3100 - 8 1/2" SQR. TOP x 6" DEEP

3 / P302 **FLOOR SINK DETAIL**

SCALE: NONE

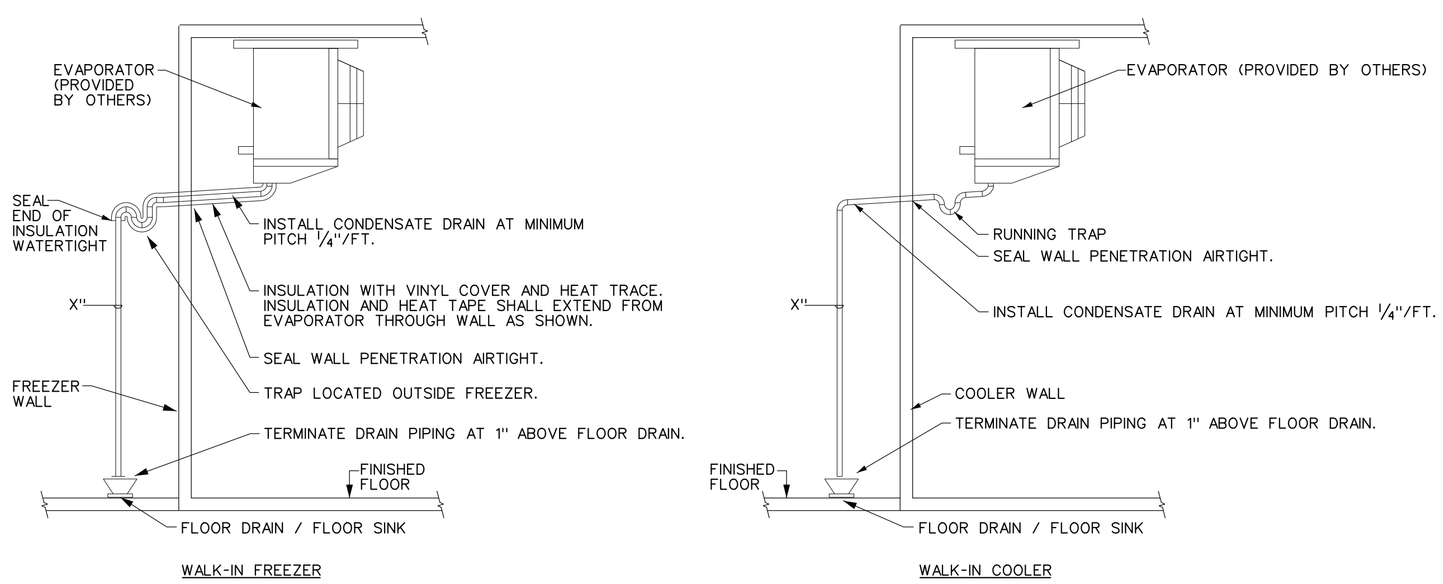

DETAIL NOTES

A. PROVIDE SUPPORTS AS REQUIRED FOR DRAIN PIPING INSIDE AND DOWN ALONG EXTERIOR WALLS OF FREEZER AND COOLER.

4 / P302 **CONDENSATE DRAIN DETAILS - WALK-IN COOLER / FREEZER**

SCALE: NONE

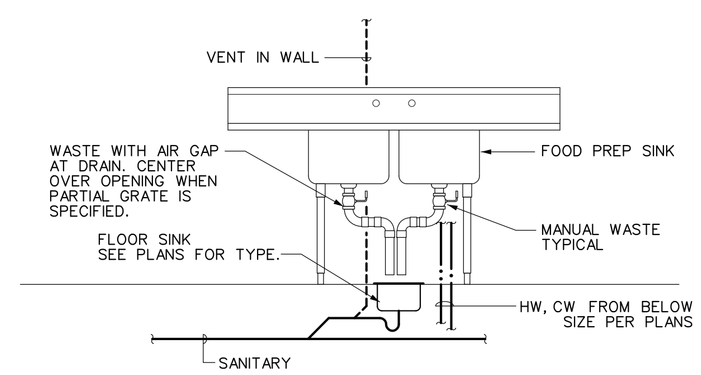

DETAIL NOTES:

A. PROVIDE 1/2" HW & CW TO EACH FAUCET w/ SERVICE VALVES BELOW SINK.

B. WASTE PIPING SHALL BE RUN TO DRAIN INDIVIDUALLY w/ AIR GAP

C. 2 BASIN SHOWN FOR REFERENCE. SEE PLANS FOR BASIN QUANTITY.

D. PROVIDE PIPING SIZED PER PLANS / EQUIPMENT SCHEDULE

5 / P302 **FOOD PREP SINK DETAIL**

SCALE: NONE

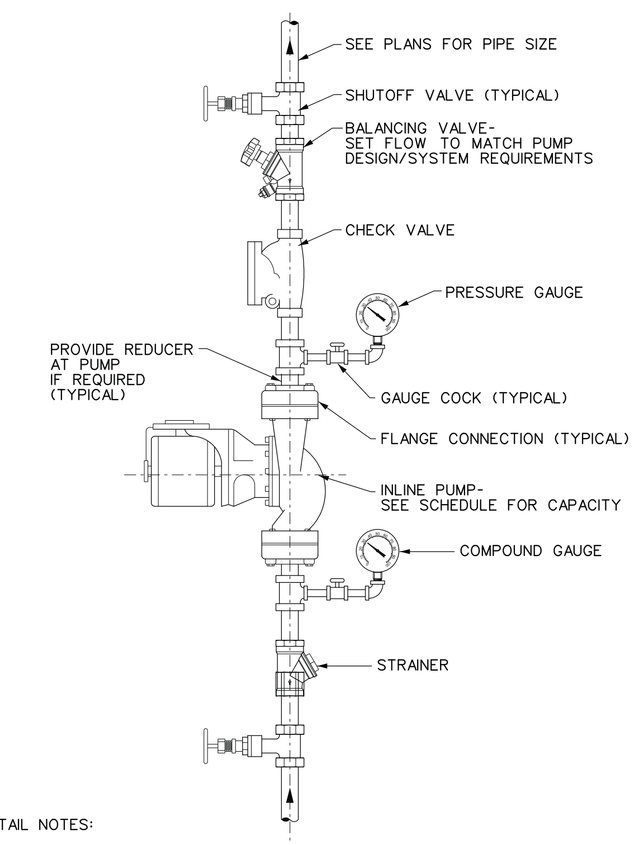

DETAIL NOTES:

A. PRESSURE GAUGES - SELECT GAUGE RANGE TO PLACE MAXIMUM SYSTEM OPERATING PRESSURE IN MIDDLE THIRD OF RANGE.

B. PROVIDE UNION ON PUMP INLET AND OUTLET IF PUMP IS NOT FLANGED.

C. INSTALL PUMP WITH SHAFT HORIZONTAL. PIPING MAY BE INSTALLED VERTICAL, AS SHOWN, OR HORIZONTAL DEPENDING ON SITE CONDITIONS.

D. INSTALL CHECK VALVE HORIZONTALLY OR VERTICALLY WITH FLOW UPWARD.

6 / P302 **INLINE PUMP DETAIL**

SCALE: NONE

PERMIT SET 05-12-21

ME ENGINEERING
Mechanical/Electrical/Plumbing Consultants
MEP Projects # 200095
Schenectady, Saratoga & Albany
518.374.2193 | 518.374.2195 fax
2030 Maxon Road Ext. Schenectady, NY 12308
518.810.0171
www.meengineering.com

DATE: 5/12/2021
REVISED:

PROJECT NO: 203095
DESIGNED BY:
DRAWN BY:
CHECKED BY: RSA
SCALE: AS NOTED
NOTES:

PLUMBING DETAILS

HARRIS A. SANDERS ARCHITECTS, P.C.
252 WASHINGTON AVENUE, ALBANY, NEW YORK 12210

L'DOR ADULT CARE FACILITY
156 WEST CLARKSTOWN ROAD
NEW CITY N.Y. 10956

STATE OF NEW YORK · MICHAEL K. SUMMERS · 077881-1 · LICENSED PROFESSIONAL ENGINEER

SHEET NO.
P302

OF: