SEQUENCE OF OPERATION:

EXHAUST FAN:

1. WHEN THE SPACE TEMPERATURE SET-POINT (80 DEGREES ADJUSTABLE) IS EXCEEDED, LINE VOLTAGE MOTORIZED AIR DAMPERS AT THE EXHAUST FAN AND SRV SHALL OPEN. WHEN THE DAMPERS HAVE REACHED FULL OPEN, AS INDICATED BY THE DAMPER ACTUATORS END SWITCH, THE FAN WILL START.

2. WHEN SPACE CO LEVEL EXCEEDS 70PPM, THE LINE VOLTAGE EXHAUST FAN AND SRV DAMPER SHALL OPEN. WHEN THE DAMPERS HAVE REACHED FULL OPEN, AS INDICATED BY THE DAMPER ACTUATORS END SWITCH, THE FAN WILL START. THE SRV AND EXHAUST FAN AAD WILL REMAIN OPEN AND THE FAN SHALL RUN UNTIL CO LEVELS FALL BELOW SETPOINT.

3. FAN SHALL BE SHUTDOWN AND MOTORIZED AUTOMATIC AIR DAMPER SHALL CLOSE UPON ACTIVATION OF THE FIRE ALARM SYSTEM.

4. AUTOMACTIC AIR DAMPERS SHALL CLOSE WHEN FAN IS SHUT-DOWN.

INFRARED HEATERS:

1. THE INFRARED HEATING SYSTEM SHALL BE CONTROLLED VIA WALL-MOUNTED THERMOSTAT. THE USER'S SHALL BE ABLE TO ADJUST THE SETPOINT FOR THE SYSTEM. THE EQUIPMENT SAFETY FEATURES SHALL BE RUN THROUGH THE SYSTEM CONTROLLER TO ENABLE THE SYSTEM TO ENABLE THE VACUUM PUMP AND BURNER(S).

C1 SEQUENCE OF OPERATION

SCALE: NOT TO SCALE

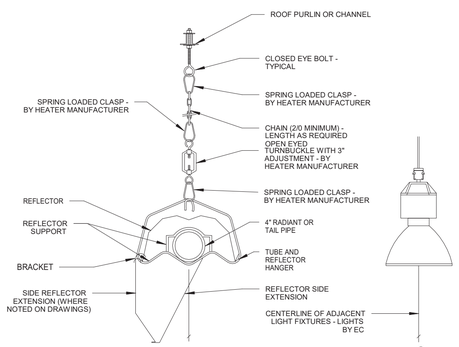

SECTION OF REFLECTOR AT TUBE AND REFLECTOR HANGER

B1 REFLECTOR AND REFLECTOR HANGER DETAIL

SCALE: NOT TO SCALE

INFRARED RADIANT TUBE HEATER SCHEDULE (IRH)

UNIT NO.	LOCATION	STRAIGHT LENGTH (FT)	FUEL TYPE	INPUT MBH	GAS PRESSURE MIN. (IN WG)	GAS PRESSURE MAX. (IN WG)	# OF STAGES	ELECTRICAL			BASIS OF DESIGN		REMARKS
								VOLTS	PHASE	MCA	MANUFACTURER	MODEL	
IRH-1	SRE BLDG 101	10' - 0"	NATURAL GAS	40	4.6	14	1	120	1	1	ROBERTS GORDON	CTHN-40	1
IRH-2	SRE BLDG 101	20' - 0"	NATURAL GAS	60	4.6	14	1	120	1	1	ROBERTS GORDON	CTHN-60	2
IRH-3	SRE BLDG 101	20' - 0"	NATURAL GAS	60	4.6	14	1	120	1	1	ROBERTS GORDON	CTHN-60	2
IRH-4	SRE BLDG 101	10' - 0"	NATURAL GAS	40	4.6	14	1	120	1	1	ROBERTS GORDON	CTHN-40	1

1. PROVIDE TOP REFLECTORS.
2. PROVIDE TOP AND SIDE REFLECTORS.

FAN SCHEDULE (EF)

UNIT NO.	LOCATION	SERVICE	TYPE	ARRANGEMENT	CFM	E.S.P. (IN WG)	RPM	MAX. SONES	ELECTRICAL			HP	BASIS OF DESIGN		REMARKS
									VOLTS	PHASE	FLA		MANUFACTURER	MODEL	
EF-1	SRE BLDG 101	EXHUAST	DIRECT DRIVE	WALL MOUNTED	2000 CFM	0.5	1725	21	115 V	1	6.4	1/2	Greenheck	AER-E20C-310-VG	1,2,3

1. PROVIDE 45 DEGREE WEATHER HOOD.
2. PROVIDE UNIT WITH SHORT WALL HOUSING.
3. PROVIDE 22X22 AUTOMATIC AIR DAMPER.

STATIONARY ROOF VENT SCHEDULE (SRV)

UNIT NO.	LOCATION	SERVICE	CFM	APD (IN WG)	THROAT DIMENSIONS		FREE AREA (SQFT)	BASIS OF SDESIGN		REMARKS
					LENGTH	WIDTH		MANUFACTURER	MODEL	
SRV-1	ROOF	INTAKE	2000	0.05	2' - 0"	2' - 6"	5	Greenheck	FGI	1,2

1. PROVIDE 2" DEEP DRIP PAN.
2. PROVIDE 14" H. CURB WITH MOTORIZED DAMPER.

VACUUM PUMP SCHEDULE (VP)

UNIT NO.	LOCATION	ARRANGEMENT	ELECTRICAL				BASIS OF DESIGN		REMARKS
			VOLTS	PHASE	RPM	HP	MANUFACTURER	MODEL	
VP-1	SRE BLDG 101	WALL MOUNTED	120 V	1	3450	3/4	ROBERTS GORDON	EP-201	

B2 SCHEDULES

SCALE: NOT TO SCALE

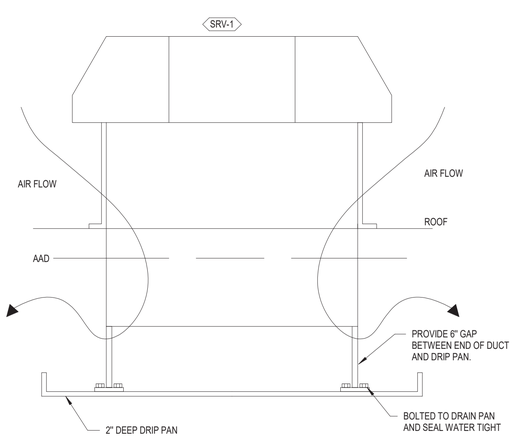

A1 STATIONARY ROOF VENT

SCALE: NOT TO SCALE

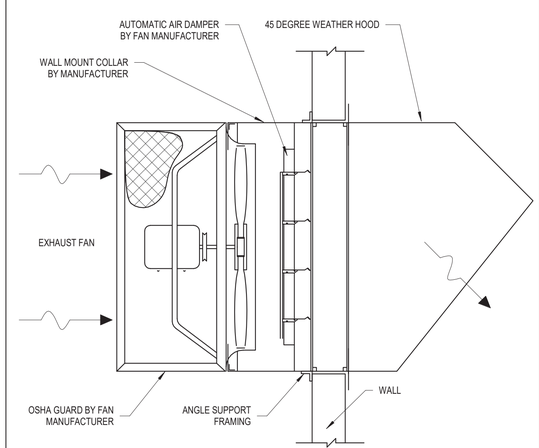

A2 PROPELLER WALL FAN DETAIL

SCALE: NOT TO SCALE

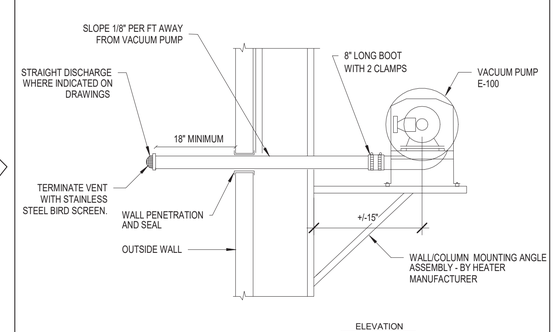

DETAIL NOTES:

1. WALL SHALL BE MADE BY METAL BUILDING MANUFACTURER USING RUBBER "DEKTITE" PIPE FLASHING.

A3 VACUUM PUMP VENT DETAIL

SCALE: NOT TO SCALE

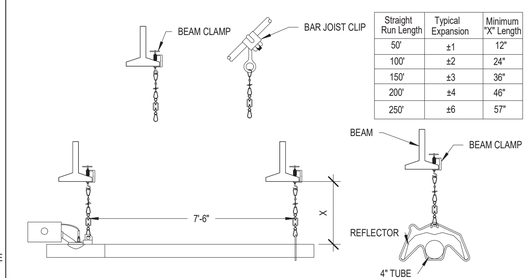

Straight Run Length	Typical Expansion	Minimum "X" Length
50'	±1	12"
100'	±2	24"
150'	±3	36"
200'	±4	46"
250'	±6	57"

NOTES:
FIRST HANGER AFTER EACH BURNER SHALL BE 7'-6" DOWNSTREAM.
AFTER THAT ALL OTHER HANGERS SHALL BE SPACED AT 10'-0".

CHAIN LENGTH TO BE DETERMINED BASED ON THE LENGTH OF RUN AS PER TABLE ABOVE.

A4 INFRARED HEATING SYSTEM HANGER DETAIL

SCALE: NOT TO SCALE

C&S COMPANIES®

C&S Engineers, Inc.
499 Col. Eileen Collins Blvd.
Syracuse, New York 13212
Phone: 315-455-2000
Fax: 315-455-9667
www.cscos.com

STATE OF NEW YORK · JEFFREY D. RALYN · 077206 · LICENSED PROFESSIONAL ENGINEER

ORANGE COUNTY · 1 NOVEMBER 1683 · NEW YORK

SRE BUILDING
ORANGE COUNTY AIRPORT
500 DUNN ROAD
MONTGOMERY NY 12549

MARK	DATE	DESCRIPTION

REVISIONS

PROJECT NO:	104120001
DATE:	FEBRUARY 2021
DRAWN BY:	A.M. CALABRESE
DESIGNED BY:	A.M. CALABRESE
CHECKED BY:	L.J. MERRY

NO ALTERATION PERMITTED HEREON EXCEPT AS PROVIDED UNDER SECTION 7209 SUBDIVISION 2 OF THE NEW YORK EDUCATION LAW

SCHEDULES AND DETAILS

M-601

Copyright ©