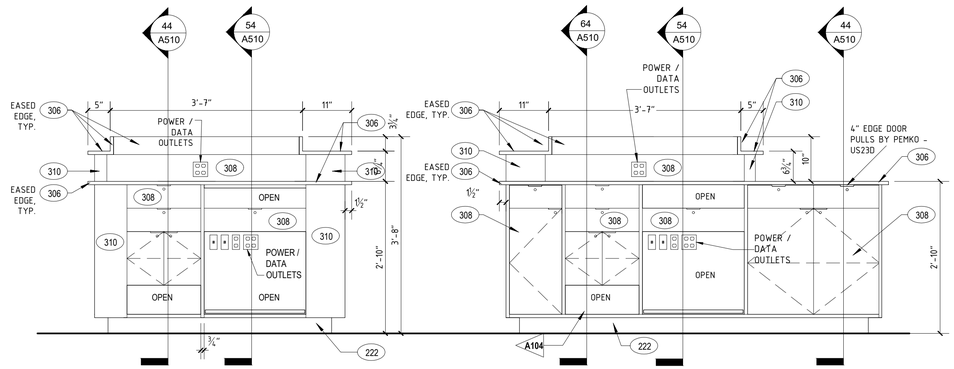

12 A502 **WELCOME PODS ELEVATION**
3/4" = 1'-0"

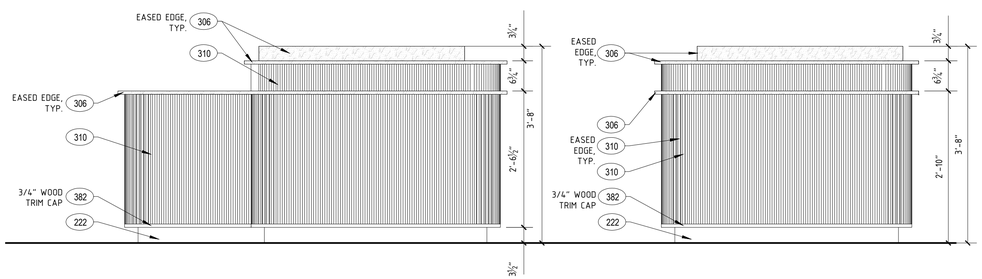

13 A502 **WELCOME PODS ELEVATION**
3/4" = 1'-0"

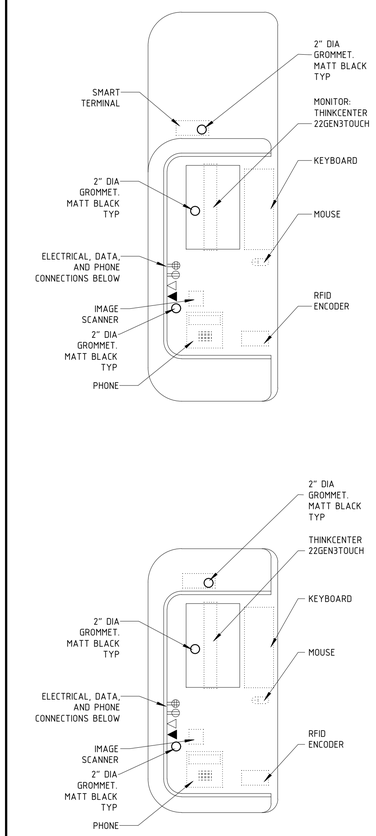

53 A502 **WELCOME POD EQUIPMENT PLAN**
3/4" = 1'-0"

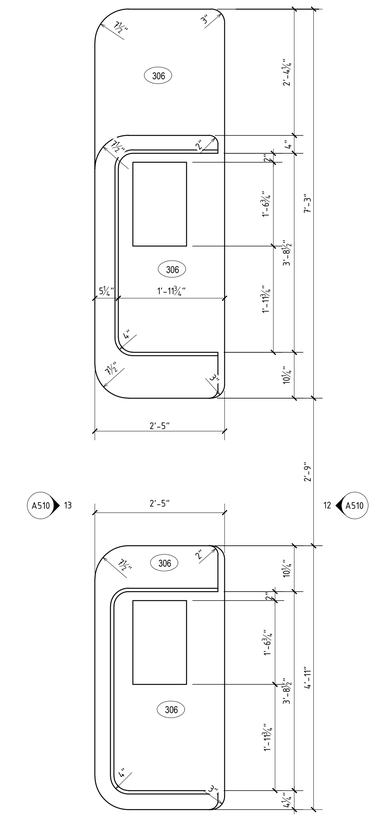

63 A500 **WELCOME POD PLAN**
3/4" = 1'-0"

ITEM	Model # / Description	Manufacturer	Dimensions (H x W x D) inches
Phone	6865i, Mid Range SIP	Mitel - Aastra	3.5 x 8.11 x 10.91
RFID Encoder	Encoder and Updater	Assa Abloy Hospitality	6 x 3.28 x 1.72
Image Scanner	Genesis 7580	Honeywell	5.9 x 3.3 x 3.2
Smart Terminal	ict 250	Ingenico	2.48 x 3.26 x 7.28
Cash Tray	Duralite Cash Tray - Large	Steelmaster	2.3 x 16 x 11.3
Printer	Laser Jet Enterprise M607	HP	15 x 17 x 18.3
Printer (smaller alternate)	MS621dn	Lexmark	11.9 x 15.7 x 14.7
Monitor: ThinkCenter Tiny-in-One 22Gen3Touch	Tiny-in-One 22Gen3Touch	Levono	13.35 x 19.26 x 2.85
Mount Bracket	ThinkCenter Tiny VESA Mount II	Levono	
Keyboard and Mouse	Levono Wireless Keyboard and Mouse Combo Part number: 4X30M39458	Levono	.81 x 16.69 x 6.12
Compact PC	ThinkCenter M920 Tiny This PC can be mounted on the back of the Monitor Stand or in an independent location	Levono	7.2 x 7 x 1.4

NOTES:
1. Verify all Front Desk Equipment with Owner.
2. Drawing assumes the above specified equipment. If variations to this equipment occur, contractor shall verify with owner and adjust millwork to accommodate sizes as needed.
3. Contractor shall provide drilled holes with grommets at appropriate locations at work surface top and interior side and back panels for wire management.
4. Contractor shall coordinate with Owner any additional electrical outlets and technology connections for all equipment.

14 A502 **FRONT DESK EQUIPMENT (BY OTHERS; FOR INFORMATION ONLY)**
3/8" = 1'-0"

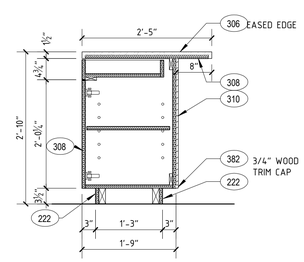

44 A502 **WELCOME POD SECTION**
3/4" = 1'-0"

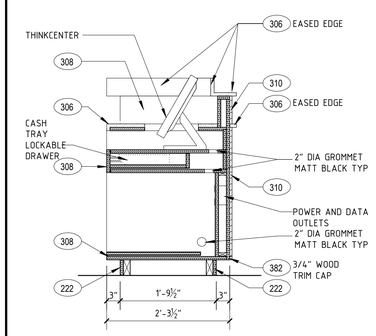

54 A502 **WELCOME POD SECTION**
3/4" = 1'-0"

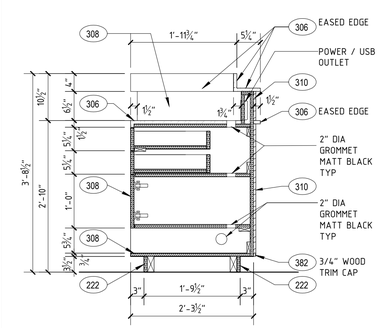

64 A502 **WELCOME POD SECTION**
3/4" = 1'-0"

architects, p.c.
7301 Barberry Lane
Manlius, New York 13104
315•415•9988

A NEW 108-ROOM COURTYARD BY MARRIOTT HOTEL & SUITES

Turner Road
Woodbury, New York
location #12121

for

RAINBOW ENTERPRISES

4758 Highway 28
Cooperstown, NY

REVISION DATES

UNAUTHORIZED ALTERATIONS OR ADDITIONS TO THIS DRAWING ARE A VIOLATION OF STATE EDUCATION LAW ARTICLES 145 AND 147.

THIS DRAWING IS AN INSTRUMENT OF SERVICE FOR RAINBOW ENTERPRISES, AND MAY NOT BE REPRODUCED WITHOUT THE EXPRESS CONSENT OF THE OWNER AND THE ARCHITECT

DRAWING TITLE
WELCOME POD DETAILS

DATE
MARCH 1, 2021

PROJECT NUMBER
17971

SHEET NUMBER
A502