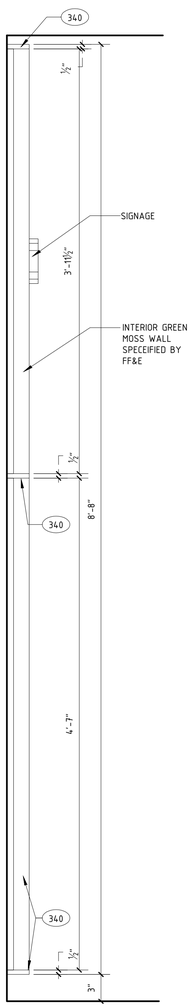

14 SECTION
A510 SCALE: 1 1/2" = 1'-0"

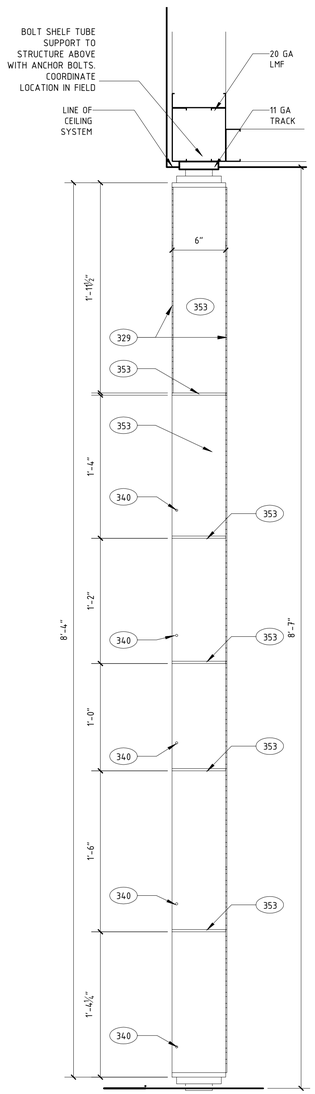

24 SECTION
A510 SCALE: 1 1/2" = 1'-0"

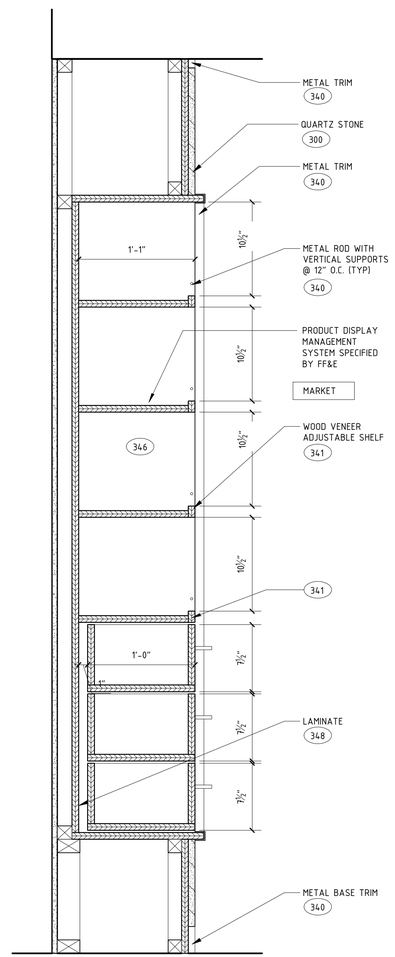

34 SECTION
A510 SCALE: 1 1/2" = 1'-0"

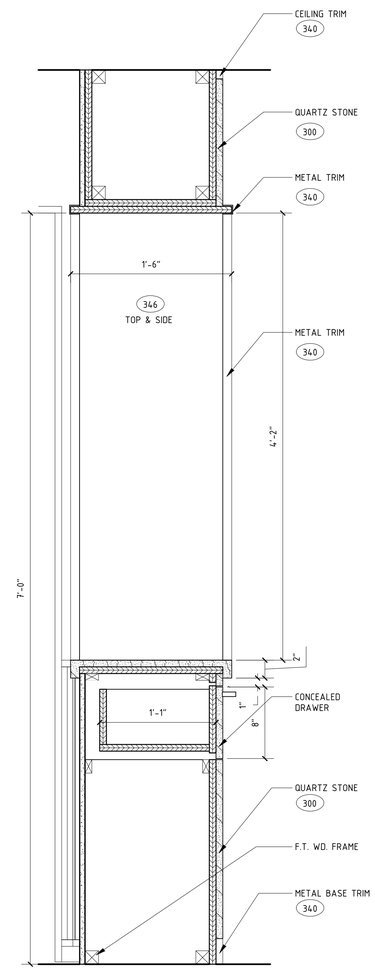

44 SECTION
A510 SCALE: 1 1/2" = 1'-0"

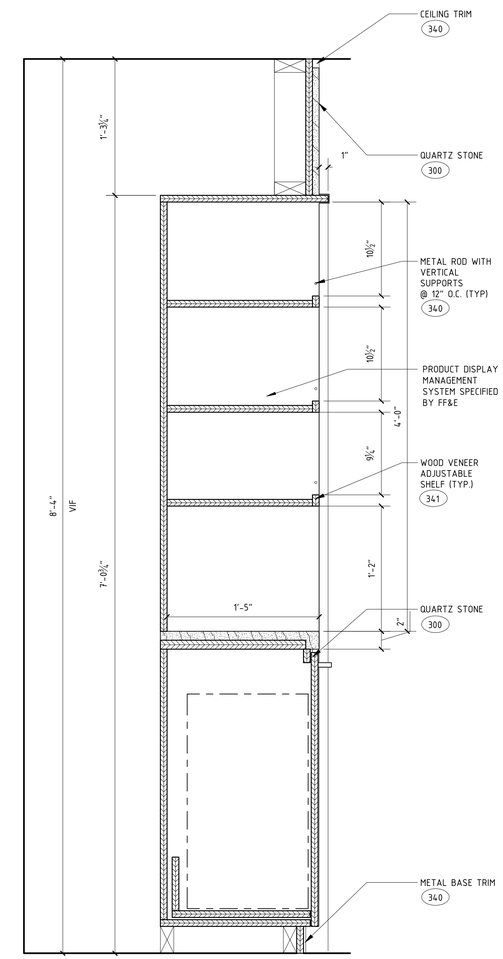

54 SECTION
A510 SCALE: 1 1/2" = 1'-0"

architects, p.c.
7301 Barberry Lane
Manlius, New York 13104
315•415•9988

A NEW 108-ROOM COURTYARD BY MARRIOTT HOTEL & SUITES

Turner Road
Woodbury, New York
location #12121

for

RAINBOW ENTERPRISES

4758 Highway 28
Cooperstown, NY

REVISION DATES

UNAUTHORIZED ALTERATIONS OR ADDITIONS TO THIS DRAWING ARE A VIOLATION OF STATE EDUCATION LAW ARTICLES 145 AND 147.

THIS DRAWING IS AN INSTRUMENT OF SERVICE FOR RAINBOW ENTERPRISES, AND MAY NOT BE REPRODUCED WITHOUT THE EXPRESS CONSENT OF THE OWNER AND THE ARCHITECT

DRAWING TITLE
CRATE SECTIONS

DATE
MARCH 1, 2021

PROJECT NUMBER
17971

SHEET NUMBER
A510