MANHOLE REQUIREMENT CHECKLIST:	
PIPE TO MH CONNECTOR -	□ HOLE THRU □ BOOT (KOR-N-SEAL) □ ECONSEAL (EQ. TO A-LOK)
COATING -	□ YES□ INTERIOR, □ BITUMINOUS □ EXTERIOR, □ EPOXY □ NO
ROOF OPENING -	□ 24" Dia.; □ 30" Dia.
6" BASE EXT. REQUIRED?	□ YES; □ NO

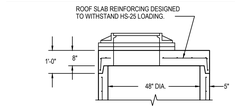

SECTION WITH ROOF SLAB

MA INDUSTRIES MODEL #PS2-PF STEEL REINFORCED COPOLYMER POLYPROPYLENE PLASTIC STEP(OR EQUAL) PER ASTM D2146 TYPE II, GRADE 16906.

STEP DETAIL

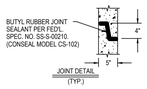

JOINT DETAIL (TYP.)

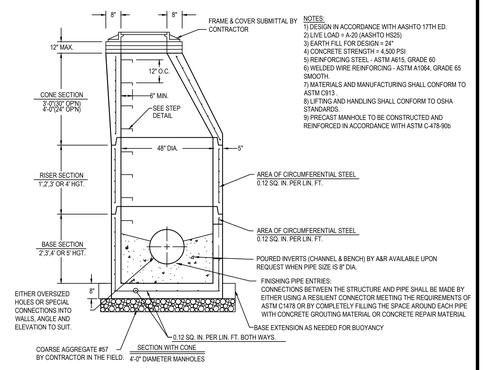

NOTES:
1) DESIGN IN ACCORDANCE WITH AASHTO 17TH ED.
2) LIVE LOAD = A-20 (AASHTO HS25)
3) EARTH FILL FOR DESIGN = 24"
4) CONCRETE STRENGTH = 4,500 PSI
5) REINFORCING STEEL - ASTM A615, GRADE 60
6) WELDED WIRE REINFORCING - ASTM A1064, GRADE 65 SMOOTH.
7) MATERIALS AND MANUFACTURING SHALL CONFORM TO ASTM C913.
8) LIFTING AND HANDLING SHALL CONFORM TO OSHA STANDARDS.
9) PRECAST MANHOLE TO BE CONSTRUCTED AND REINFORCED IN ACCORDANCE WITH ASTM C-478-90b

C1 48" DIA. STORM DRAIN MANHOLE
NOT TO SCALE

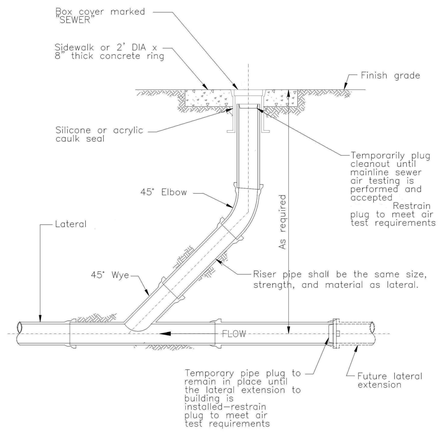

C3 SANITARY/STORM CLEANOUT
NOT TO SCALE

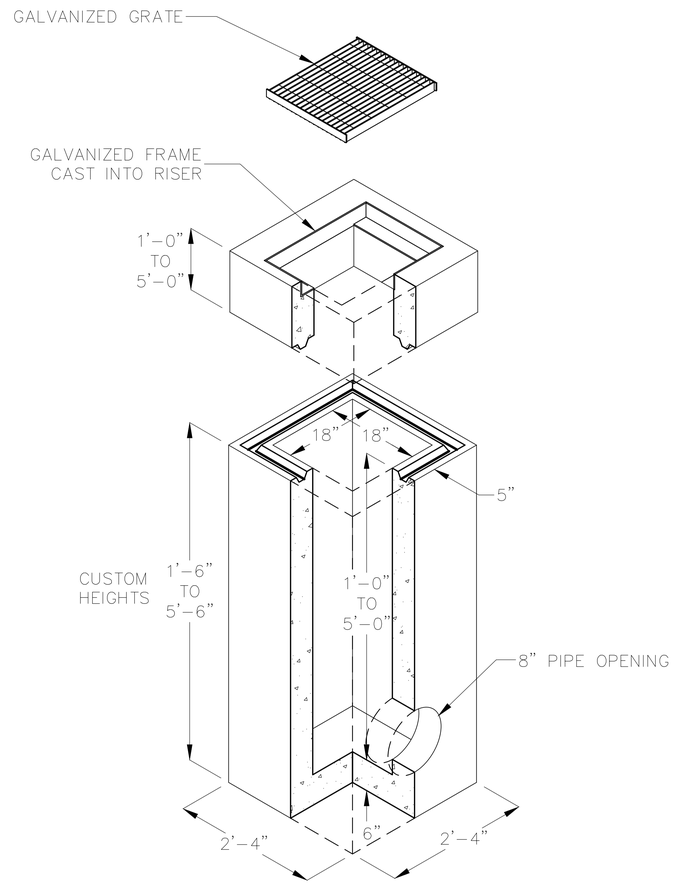

E5 18" X 18" STORM DRAIN CATCH BASIN
NOT TO SCALE

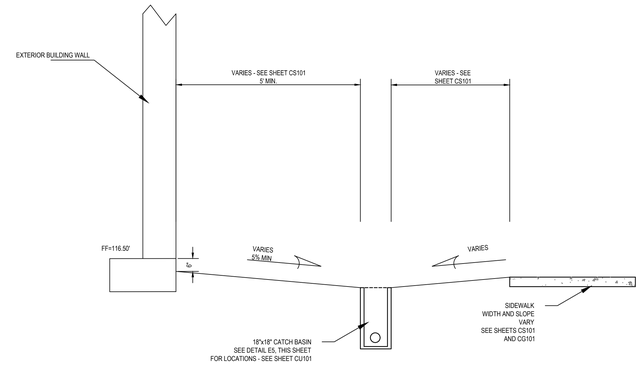

B8 BUILDING DRAINAGE SWALE CROSS SECTION
NOT TO SCALE

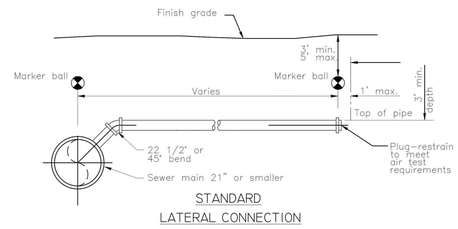

STANDARD LATERAL CONNECTION

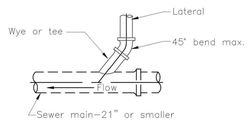

STANDARD WYE PLAN VIEW

E8 SANITARY AND STORM SEWER WYE CONNECTION DETAIL
NOT TO SCALE

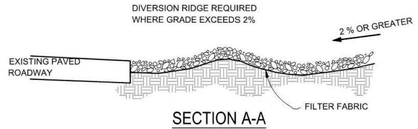

SECTION A-A

NOTE:
USE SANDBAGS, STRAW BALES OR OTHER APPROVED METHODS TO CHANNELIZE RUNOFF TO BASIN AS REQUIRED.

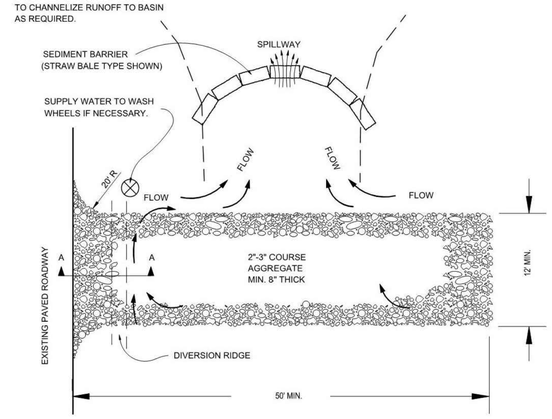

F1 CONSTRUCTION ENTRANCE
NOT TO SCALE

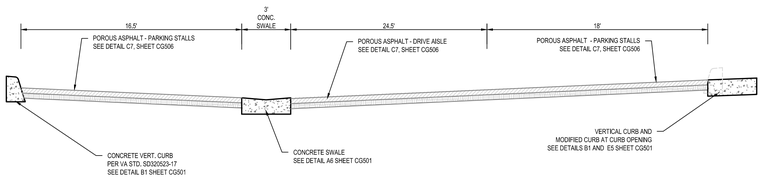

F5 PARKING LOT CROSS SECTION
NOT TO SCALE

Revisions:	Date:
-	-
-	-
-	-
-	-
-	-
-	-
-	-
-	-
-	-

CONSULTANT

HINMAN — C.S.Davidson, Inc. — MES GROUP

Protective Design Specialist
240 West 35th St. Suite 1004
New York, NY 10001
(212) 967-4890
Corrine Tan, SE

Structural
315 West James Street, Suite 102
Lancaster, PA 17603
(717) 481-2991
Jason Vannoy, SE, PE

MEP
550 North Reo Street, Suite 203
Tampa, FL 33609
(813) 289-4700
Nicholas Stephenson, PE

ARCHITECT/ENGINEER OF RECORD

A/E:
TRIPLE C - The A/E Group
201 E. Jefferson Street, Suite 200
Syracuse, NY 13202
315.484.5958
Mat Perkins

TRIPLE C – THE A&E GROUP
A MULTI-DISCIPLINE A/E COMPANY

STAMP

REGISTERED PROFESSIONAL ENGINEER
Mat Perkins
DATE EXPIRES
ARIZONA, U.S.A.
EXPIRES: 12/31/24

Office of Construction and Facilities Management

VA U.S. Department of Veterans Affairs

Drawing Title: CIVIL DETAIL SHEET 4	Phase: ISSUED FOR CONSTRUCTION	Project Title: NEW COMMUNITY LIVING CENTER	Project Number: 620-334
Approved:			Building Number: CLC
		Location: 2094 Albany Post Road, Montrose, NY 10548	Drawing Number: CG504
		Issue Date: 05/09/2022 · Checked: PERKINS · Drawn: STRUBLE	

VA FORM 08 - 6231