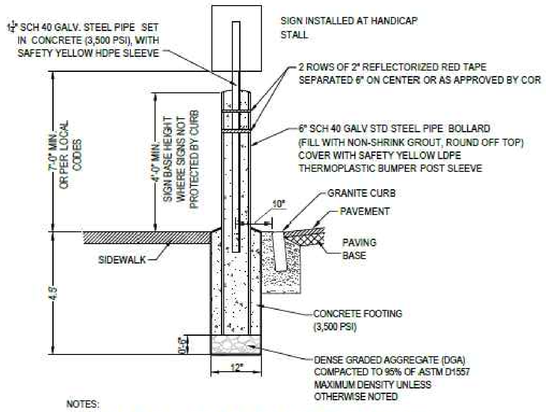

NOTES:
1. SIGNS SHALL BE MOUNTED ON BOLLARDS WHERE INDICATED ON THE PLANS.
2. ALL BOLLARD COVER STYLE, COLOR, AND RECTORIZED TAPE ORIENTATION SHALL BE SUBMITTED TO COR FOR APPROVAL PRIOR TO ORDERING.

C1 SIGN POST BOLLARD DETAIL
NOT TO SCALE

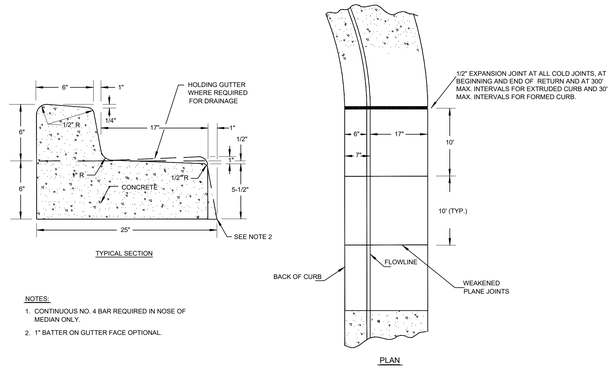

NOTES:
1. CONTINUOUS NO. 4 BAR REQUIRED IN NOSE OF MEDIAN ONLY.
2. 1" BATTER ON GUTTER FACE OPTIONAL.

C4 2' CONCRETE "TIP-OUT" CURB
NOT TO SCALE

NOTES:
1. AREA 1: TREE PROTECTION ZONE
2. AREA 2: LOWER CANOPY PROTECTION
3. AREA 3: CRITICAL ROOT ZONE AND/OR STRUCTURAL ROOT ZONE PROTECTION
4. 2"x4" WOODEN CRIBBING ENCIRCLING TREE TRUNK
5. WIRE TIE SECURED TIGHTLY AROUND WOODEN CRIBBING

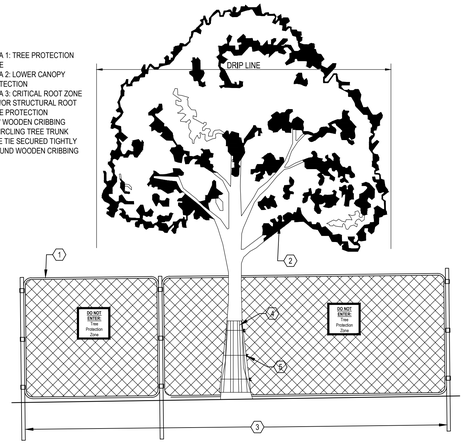

C7 TREE PROTECTION DETAIL
NOT TO SCALE

TREE PROTECTION SPECIFICATIONS

1. A 6" LAYER OF COARSE MULCH OR WOODCHIPS IS TO BE PLACED BENEATH THE DRIPLINE OF THE PROTECTED TREES. MULCH IS TO BE KEPT 12" FROM THE TRUNK.

2. A PROTECTIVE BARRIER OF 6' CHAIN LINK FENCING SHALL BE INSTALLED AROUND THE DRIPLINE OF PROTECTED TREE(S). THE FENCING CAN BE MOVED WITHIN THE DRIPLINE IF AUTHORIZED BY THE PROJECT ARBORIST OR C.O.R. BUT NOT CLOSER THAN 2' FROM THE TRUNK OF ANY TREE. FENCE POSTS SHALL BE 1.5" IN DIAMETER AND ARE TO BE DRIVEN 2' INTO THE GROUND. THE DISTANCE BETWEEN POSTS SHALL NOT BE MORE THAN 10'. THIS ENCLOSED AREA IS THE TREE PROTECTION ZONE (TPZ).

3. MOVABLE BARRIERS OF CHAIN LINK FENCING SECURED TO CEMENT BLOCKS CAN BE SUBSTITUTED FOR "FIXED" FENCING IF THE PROJECT ARBORIST AND C.O.R. AGREE THAT THE FENCING WILL HAVE TO BE MOVED TO ACCOMMODATE CERTAIN PHASES OF CONSTRUCTION. THE BUILDER MAY NOT MOVE THE FENCE WITHOUT AUTHORIZATION FROM THE PROJECT ARBORIST OR C.O.R..

4. WHERE THE C.O.R. OR PROJECT ARBORIST HAS DETERMINED THAT TREE PROTECTION FENCING WILL INTERFERE WITH THE SAFETY OF WORK CREWS, TREE WRAP MAY BE USED AS AN ALTERNATIVE FORM OF TREE PROTECTION. WOODEN SLATS AT LEAST ONE INCH THICK ARE TO BE BOUND SECURELY, EDGE TO EDGE, AROUND THE TRUNK. A SINGLE LAYER OR MORE OF ORANGE PLASTIC CONSTRUCTION FENCING IS TO BE WRAPPED AND SECURED AROUND THE OUTSIDE OF THE WOODEN SLATS. MAJOR SCAFFOLD LIMBS MAY REQUIRE PROTECTION AS DETERMINED BY THE C.O.R. OR PROJECT ARBORIST. STRAW WADDLE MAY ALSO BE USED AS A TRUNK WRAP BY COILING THE WADDLE AROUND THE TRUNK UP TO A MINIMUM HEIGHT OF SIX FEET FROM GRADE. A SINGLE LAYER OR MORE OF ORANGE PLASTIC CONSTRUCTION FENCING IS TO BE WRAPPED AND SECURED AROUND THE STRAW WADDLE.

5. AVOID THE FOLLOWING CONDITIONS. DO NOT:
a. ALLOW RUN OFF OF SPILLAGE OF DAMAGING MATERIALS INTO THE AREA BELOW ANY TREE CANOPY.
b. STORE MATERIALS, STOCKPILE SOIL, OR PARK OR DRIVE VEHICLES WITHIN THE TPZ.
c. CUT, BREAK, SKIN, OR BRUISE ROOTS, BRANCHES, OR TRUNKS WITHOUT FIRST OBTAINING AUTHORIZATION FROM THE C.O.R..
d. ALLOW FIRES UNDER AND ADJACENT TO TREES.
e. DISCHARGE EXHAUST INTO FOLIAGE.
f. SECURE CABLE, CHAIN, OR ROPE TO TREES OR SHRUBS.
g. TRENCH, DIG, OR OTHERWISE EXCAVATE WITHIN THE DRIPLINE OR TPZ OF THE TREE(S) WITHOUT FIRST OBTAINING AUTHORIZATION FROM THE C.O.R..
h. APPLY SOIL STERILANTS UNDER PAVEMENT NEAR EXISTING TREES.

6. ONLY EXCAVATION BY HAND OR COMPRESSED AIR SHALL BE ALLOWED WITHIN THE DRIPLINE OF TREES. MACHINE TRENCHING SHALL NOT BE ALLOWED.

7. AVOID INJURY TO TREE ROOTS. WHEN A DITCHING MACHINE, WHICH IS BEING USED OUTSIDE OF THE DRIPLINE OF TREES, ENCOUNTERS ROOTS SMALLER THAN 2", THE WALL OF THE TRENCH ADJACENT TO THE TREES SHALL BE HAND TRIMMED, MAKING CLEAR, CLEAN CUTS THROUGH THE ROOTS. ALL DAMAGED, TORN AND CUT ROOTS SHALL BE GIVEN A CLEAN CUT TO REMOVE RAGGED EDGES, WHICH PROMOTE DECAY. TRENCHES SHALL BE FILLED WITHIN 24 HOURS, BUT WHERE THIS IS NOT POSSIBLE, THE SIDE OF THE TRENCH ADJACENT TO THE TREES SHALL BE KEPT SHADED WITH FOUR LAYERS OF DAMPENED, UNTREATED BURLAP, WETTED AS FREQUENTLY AS NECESSARY TO KEEP THE BURLAP WET. ROOTS 2" OR LARGER, WHEN ENCOUNTERED, SHALL BE REPORTED IMMEDIATELY TO THE PROJECT ARBORIST, WHO WILL DECIDE WHETHER THE CONTRACTOR MAY CUT THE ROOT AS MENTIONED ABOVE OR SHALL EXCAVATE BY HAND OR WITH COMPRESSED AIR UNDER THE ROOT. ROOT IS TO BE PROTECTED WITH DAMPENED BURLAP.

8. ROUTE PIPES OUTSIDE OF THE AREA THAT IS 10 TIMES THE DIAMETER OF A PROTECTED TREE TO AVOID CONFLICT WITH ROOTS.

9. WHERE IT IS NOT POSSIBLE TO REROUTE PIPES OR TRENCHES, THE CONTRACTOR SHALL BORE BENEATH THE DRIPLINE OF THE TREE. THE BORING SHALL TAKE PLACE NOT LESS THAN 3' BELOW THE SURFACE OF THE SOIL IN ORDER TO AVOID ENCOUNTERING "FEEDER" ROOTS.

10. ANY DAMAGE DUE TO CONSTRUCTION ACTIVITIES SHALL BE REPORTED TO THE PROJECT ARBORIST OR C.O.R. WITHIN SIX HOURS SO THAT REMEDIAL ACTION CAN BE TAKEN.

11. AN ISA CERTIFIED ARBORIST OR ASCA REGISTERED CONSULTING ARBORIST SHALL BE RETAINED AS THE PROJECT ARBORIST TO MONITOR THE TREE PROTECTION SPECIFICATIONS. THE PROJECT ARBORIST SHALL BE RESPONSIBLE FOR THE PRESERVATION OF THE DESIGNATED TREES. SHOULD THE BUILDER FAIL TO FOLLOW THE TREE PROTECTION SPECIFICATIONS, IT SHALL BE THE RESPONSIBILITY OF THE PROJECT ARBORIST TO REPORT THE MATTER TO THE C.O.R. AS AN ISSUE OF NON-COMPLIANCE.

12. VIOLATION OF ANY OF THE ABOVE PROVISIONS MAY RESULT IN SANCTIONS OR OTHER DISCIPLINARY ACTION.

MONTHLY INSPECTIONS

IT IS REQUIRED THAT THE SITE ARBORIST PROVIDE PERIODIC INSPECTIONS DURING CONSTRUCTION. FOUR-WEEK INTERVALS WOULD BE SUFFICIENT TO ACCESS AND MONITOR THE EFFECTIVENESS OF THE TREE PROTECTION PLAN AND TO PROVIDE RECOMMENDATIONS FOR ANY ADDITIONAL CARE OR TREATMENT.

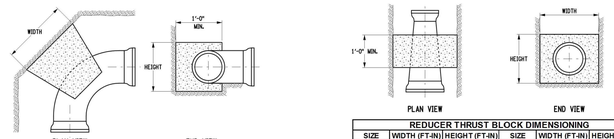

90° BEND THRUST BLOCK DIMENSIONING					
PIPE SIZE	WIDTH (FT-IN)	HEIGHT (FT-IN)	PIPE SIZE	WIDTH (FT-IN)	HEIGHT (FT-IN)
4 NPS	2'-3"	1'-3"	14 NPS	7'-3"	3'-4"
6 NPS	3'-2"	1'-9"	16 NPS	8'-3"	4'-4"
8 NPS	4'-3"	2'-3"	18 NPS	9'-3"	4'-4"
10 NPS	5'-3"	2'-4"	20 NPS	10'-4"	5'-4"
12 NPS	6'-4"	3'-3"	24 NPS	12'-4"	6'-4"

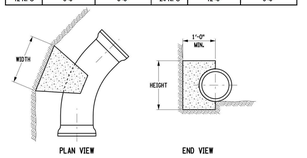

45° BEND THRUST BLOCK DIMENSIONING					
PIPE SIZE	WIDTH (FT-IN)	HEIGHT (FT-IN)	PIPE SIZE	WIDTH (FT-IN)	HEIGHT (FT-IN)
4 NPS	2'-0"	0'-9"	14 NPS	5'-3"	2'-4"
6 NPS	2'-4"	1'-3"	16 NPS	5'-4"	3'-3"
8 NPS	3'-3"	1'-9"	18 NPS	7'-3"	3'-3"
10 NPS	4'-0"	2'-0"	20 NPS	7'-3"	4'-0"
12 NPS	4'-4"	2'-3"	24 NPS	8'-9"	4'-4"

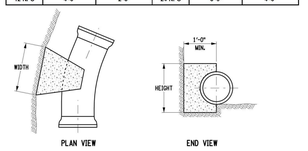

22½° BEND THRUST BLOCK DIMENSIONING					
PIPE SIZE	WIDTH (FT-IN)	HEIGHT (FT-IN)	PIPE SIZE	WIDTH (FT-IN)	HEIGHT (FT-IN)
4 NPS	1'-3"	0'-9"	14 NPS	3'-6"	2'-0"
6 NPS	2'-0"	0'-9"	16 NPS	4'-6"	2'-3"
8 NPS	2'-3"	1'-3"	18 NPS	5'-0"	2'-6"
10 NPS	3'-0"	1'-3"	20 NPS	5'-0"	3'-0"
12 NPS	3'-3"	1'-9"	24 NPS	6'-3"	3'-3"

REDUCER THRUST BLOCK DIMENSIONING				
SIZE	WIDTH (FT-IN)	HEIGHT (FT-IN)	SIZE	WIDTH (FT-IN)	HEIGHT (FT-IN)
6x4 NPS	1'-6"	1'-6"	16x8 NPS	4'-0"	4'-6"
8x4 NPS	2'-3"	2'-3"	16x10 NPS	4'-0"	4'-0"
8x6 NPS	1'-9"	1'-9"	16x12 NPS	3'-6"	3'-6"
10x6 NPS	2'-6"	2'-6"	20x12 NPS	5'-0"	5'-0"
10x8 NPS	2'-0"	2'-0"	20x16 NPS	4'-0"	4'-0"
12x6 NPS	3'-3"	3'-3"	24x12 NPS	6'-6"	6'-6"
12x8 NPS	3'-0"	3'-0"	24x16 NPS	5'-9"	5'-9"
12x10 NPS	2'-3"	2'-3"	24x20 NPS	4'-6"	4'-6"

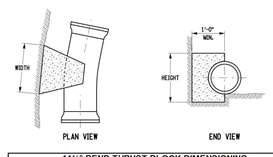

11¼° BEND THRUST BLOCK DIMENSIONING					
PIPE SIZE	WIDTH (FT-IN)	HEIGHT (FT-IN)	PIPE SIZE	WIDTH (FT-IN)	HEIGHT (FT-IN)
4 NPS	1'-0"	0'-6"	14 NPS	3'-0"	1'-3"
6 NPS	1'-3"	0'-9"	16 NPS	3'-3"	1'-9"
8 NPS	1'-9"	0'-9"	18 NPS	3'-6"	1'-9"
10 NPS	2'-0"	1'-0"	20 NPS	3'-6"	2'-0"
12 NPS	2'-3"	1'-3"	24 NPS	4'-6"	2'-3"

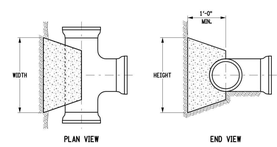

TEE/DEAD END THRUST BLOCK DIMENSIONING					
PIPE SIZE	WIDTH (FT-IN)	HEIGHT (FT-IN)	PIPE SIZE	WIDTH (FT-IN)	HEIGHT (FT-IN)
4 NPS	2'-0"	1'-0"	14 NPS	5'-6"	3'-3"
6 NPS	3'-0"	1'-3"	16 NPS	6'-6"	3'-6"
8 NPS	3'-3"	2'-0"	18 NPS	7'-6"	4'-0"
10 NPS	4'-3"	2'-3"	20 NPS	8'-6"	4'-3"
12 NPS	5'-3"	2'-6"	24 NPS	10'-3"	5'-3"

NOTES:

1. SEE SPECIAL NOTES ENTITLED "OWNER REQUIREMENTS FOR WATER MAINS AND APPURTENANCES" FOR ADDITIONAL INFORMATION ON THRUST RESTRAINT REQUIREMENTS.
2. THRUST RESTRAINT USING THRUST BLOCKS OR RESTRAINED LENGTHS ARE SHOWN ON THESE SHEETS. THRUST BLOCKS, RESTRAINED JOINTS USING TIE RODS, OR RETAINER GLANDS ARE ALL ACCEPTABLE METHODS TO MITIGATE. HOWEVER, THE THRUST RESTRAINT METHOD SELECTED SHALL BE APPROVED BY THE SYSTEM OWNER.
3. IF THE OWNER OF THE WATER SYSTEM REQUIRES A METHOD THAT RESTRAINS INDIVIDUAL JOINTS, EACH JOINT THAT FALLS WITHIN THE MINIMUM RESTRAINED LENGTH, MEASURED FROM THE CENTER OF THE FITTING, AS SHOWN ON THESE SHEETS SHALL BE RESTRAINED, AND SHALL WITHSTAND THE MAXIMUM PRESSURE APPLIED TO THE SYSTEM.
4. CLASS A CONCRETE SHALL NOT BE PLACED UNDER WATER. THE CONTRACTOR SHALL DEWATER THE EXCAVATION OR PLACE TYPE C CONCRETE USING APPROPRIATE UNDERWATER PLACEMENT TECHNIQUES.
5. CONCRETE FOR THRUST BLOCKS SHALL NOT BE ALLOWED TO COVER OR INTERFERE WITH JOINT OR RESTRAINT HARDWARE. PLASTIC SHEETING OR BUILDING FELT MAY BE PLACED OVER PIPE OR FITTINGS TO PREVENT CONCRETE FROM ADHERING TO SURFACES. CONCRETE FOR THRUST BLOCKS SHALL BE POURED AGAINST UNDISTURBED SOIL.
6. FOR BENDS, BEARING AREA SHALL BE PARALLEL TO THE EDGE OF THE FITTING AT THE FITTING MIDPOINT.
7. FOR TEES, BEARING AREA SHALL BE PERPENDICULAR TO THE BRANCH (SINGLE LEG) AXIS.
8. FOR REDUCERS, BEARING AREA SHALL BE PERPENDICULAR TO THE FITTING AXIS. THE MINIMUM THICKNESS ALONG THE FITTING AXIS SHALL BE 1'-0" OR THE LENGTH BETWEEN THE BELLS, WHICHEVER IS SMALLER.
9. THRUST RESTRAINTS FOR SIZES OVER 24 NPS OR FOR FITTINGS NOT SHOWN ON THESE SHEETS WILL BE DESIGNED ON A CASE BY CASE BASIS, AND WILL BE SHOWN IN THE CONTRACT DOCUMENTS.
10. THRUST BLOCK SIZES AND MINIMUM RESTRAINED LENGTHS SHOWN ON THESE SHEETS ARE BASED UPON THE FOLLOWING STANDARD CONDITIONS:
    1.5 = SAFETY FACTOR
    5'-0" = DEPTH OF COVER
    200 PSI = WATER SYSTEM TEST PRESSURE
    14 PSI = SOIL BEARING CAPACITY
    90 LB/CF = SOIL UNIT WEIGHT
11. FOR INSTALLATIONS NOT MEETING THE CONDITIONS OF NOTE 10, THE CONTRACTOR SHALL SUBMIT CALCULATIONS TO THE ENGINEER FOR APPROVAL OF RESTRAINT LENGTH CHOSEN.
12. TO DETERMINE REQUIRED SIZES FOR DIFFERENT CONDITIONS, MULTIPLY THE DIMENSION BY A FACTOR OF THE SPECIFIC VALUE DIVIDED BY THE STANDARD VALUE.

    EXAMPLE: FIND THRUST BLOCK DIMENSION FOR 12 NPS 45° BEND WITH 100 PSI TEST PRESSURE:

    FROM TABLE "45° BEND THRUST BLOCK DIMENSIONING"
    AREA REQUIRED AT 200 PSI IS 4'-6" X 2'-3" = 10.125 SF
    FOR 100 PSI, AREA = 10.125 X 100/200 = 5.06 SF
    USE WIDTH = 3'-6", HEIGHT = 1'-6" (AREA = 5.25 SF)

MINIMUM RESTRAINED LENGTH OF PIPE (FT-IN) L_R											
FITTING	4 NPS	6 NPS	8 NPS	10 NPS	12 NPS	14 NPS	16 NPS	18 NPS	20 NPS	24 NPS
11 ¼° BEND	1'-3"	2'-0"	2'-6"	3'-0"	3'-6"	4'-0"	4'-6"	5'-0"	5'-6"	6'-3"
22 ½° BEND	1'-3"	2'-0"	2'-6"	3'-0"	3'-6"	4'-0"	4'-6"	5'-0"	5'-6"	6'-6"
45° BEND	3'-0"	4'-0"	5'-3"	6'-3"	7'-6"	8'-6"	9'-6"	10'-6"	11'-6"	13'-6"
90° BEND	7'-0"	9'-3"	12'-6"	15'-6"	18'-0"	20'-0"	23'-0"	25'-6"	28'-0"	32'-6"
DEAD END	8'-6"	12'-6"	16'-0"	19'-3"	23'-0"	26'-0"	29'-6"	33'-0"	36'-0"	42'-0"
NOTE: PVC PIPE WILL TYPICALLY HAVE SLIGHTLY GREATER RESTRAINED LENGTH										
NOTE: FOR POLYETHYLENE WRAPPED PIPE, MULTIPLY VALUES IN TABLE BY 1.45										

F1 WATER THRUST RESTRAINT DETAILS
NOT TO SCALE

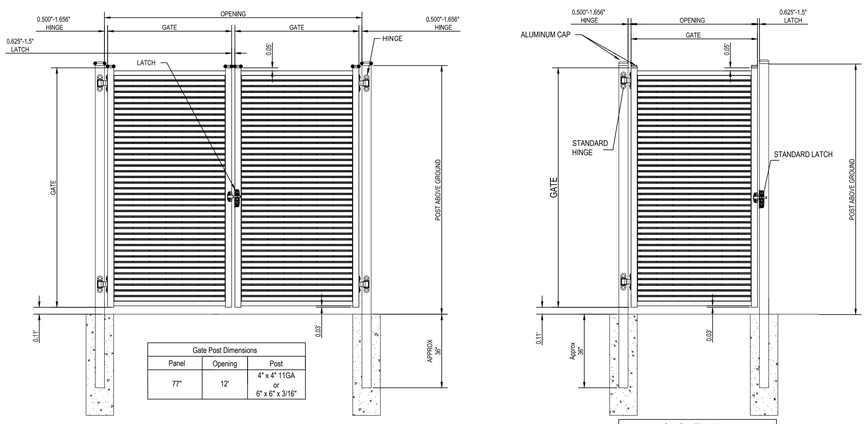

Gate Post Dimensions		
Panel	Opening	Post
77"	12'	4" x 4" 11GA or 6" x 6" x 3/16"

Gate Post Dimensions		
Panel	Opening	Post
77"	3' to 5'	3" x 3" 11GA

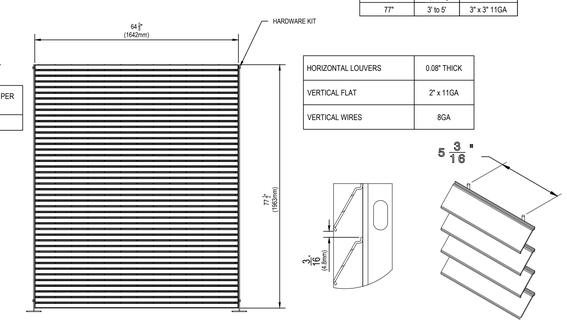

PANEL HEIGHT	NUMBER OF BRACKET KITS PER POST
77"H	3

HORIZONTAL LOUVERS	0.08" THICK
VERTICAL FLAT	2" x 11GA
VERTICAL WIRES	8GA

F6 FENCE AND GATES AT GENERATOR PAD
NOT TO SCALE

Revisions:	Date:
-	-
-	-
-	-
-	-
-	-
-	-
-	-
-	-
-	-

CONSULTANT

HINMAN
C.S.Davidson, Inc.
MES GROUP

Protective Design Specialist
240 West 35th St. Suite 1004
New York, NY 10001
(212) 967-4890
Corrine Tan, SE

Structural
315 West James Street, Suite 102
Lancaster, PA 17603
(717) 481-2991
Jason Vannoy, SE, PE

MEP
550 North Reo Street, Suite 203
Tampa, FL 33609
(813) 289-4700
Nicholas Stephenson, PE

ARCHITECT/ENGINEER OF RECORD

A/E:
TRIPLE C - The A/E Group
201 E. Jefferson Street, Suite 200
Syracuse, NY 13202
315.484.5958
Mat Perkins

TRIPLE C - THE A&E GROUP
A MULTI-DISCIPLINE AE COMPANY

STAMP

REGISTERED PROFESSIONAL ENGINEER CERTIFICATE OF REGISTRATION 2018/07/24 MAT PERKINS 075-20-0000 ARIZONA, U.S.A.
EXPIRES: 12/31/24

Office of Construction and Facilities Management

VA U.S. Department of Veterans Affairs

Drawing Title: CIVIL DETAIL SHEET 5	Phase: ISSUED FOR CONSTRUCTION	Project Title: NEW COMMUNITY LIVING CENTER	Project Number: 620-334
			Building Number: CLC
Approved:		Location: 2094 Albany Post Road, Montrose, NY 10548	Drawing Number: CG505
		Issue Date: 05/09/2022	Checked: PERKINS / Drawn: STRUBLE

VA FORM 08 - 6231