FIRE ALARM MATRIX

	ACTIVATES OUTPUT FUNCTIONS AS CURRENTLY CONFIGURED	ACTUATES ALARM CONDITION AT THE EXISTING FIRE ALARM CONTROL PANEL AS CURRENTLY CONFIGURED	TRANSMITS ALARM SIGNAL TO AN APPROVED MONITORING STATION AS CURRENTLY CONFIGURED	ACTIVATES SUPERVISORY CONDITION AT THE EXISTING FIRE ALARM CONTROL PANEL AS CURRENTLY CONFIGURED	TRANSMITS SUPERVISORY SIGNAL TO AN APPROVED MONITORING STATION AS CURRENTLY CONFIGURED	ACTUATES TROUBLE CONDITION AT FIRE ALARM CONTROL PANEL	TRANSMITS TROUBLE SIGNAL TO AN APPROVED MONITORING STATION AS CONFIGURED	SHUTS DOWN HVAC AFFECTED UNIT	ACTIVATES INTERIOR AUDIBLE/VISUAL NOTIFICATION APPLIANCES (TEMPORAL3)	ACTIVATES TEMPORAL4 PATTERN THROUGH AFFECTED ALARM	ACTIVATES EXTERIOR WATERFLOW BELL NOTIFICATION APPLIANCE
EXISTING INITIATING DEVICES	●										
FIRE SPRINKLER SYSTEMS											
- WATERFLOW SWITCH			●		●				●		●
- CONTROL VALVE TAMPER SWITCH						●		●			
MANUAL PULL STATIONS			●		●				●		
SMOKE DETECTION DEVICES											
- SPOT TYPE			●		●				●		
- AIR HANDLING UNIT - RETURN SIDE						●		●		●				
CARBON MONOXIDE DETECTION DEVICES											
- SPOT TYPE (STAND ALONE BATTERY OPERATED)											●
LOSS OF PRIMARY POWER AT THE FACP							●		●		
ABNORMAL CIRCUIT (OPEN, GROUND FAULT, SHORT) OR DEVICE							●		●		

NOTE:

1. THIS MATRIX ONLY INCLUDES THE ITEMS WITHIN THIS SCOPE OF WORK.
2. ALL EXISTING INITIATION DEVICES SHALL REMAIN AS CURRENTLY CONFIGURED.
3. ALL EXISTING OUTPUT FUNCTIONS SHALL REMAIN AS CURRENTLY CONFIGURED. THE NEW OUTPUT FUNCTIONS DESCRIBED ABOVE IN THE FIRE ALARM MATRIX ARE FOR THE NEW FIRE ALARM EQUIPMENT LOCATED IN THE DOLLAR TREE SPACE.

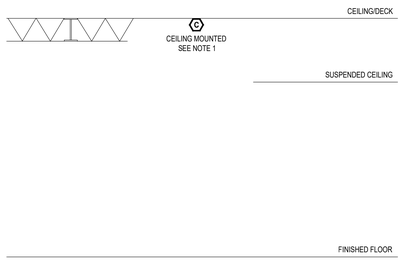

NOTES:

1. WHERE INDICATED ON THE DRAWINGS - LOCATE CEILING MOUNTED CARBON ALARMS DETECTORS ON THE BOTTOM OF DECK (NOT ON BOTTOM OF STRUCTURAL MEMBERS), AND AS INDICATED IN NFPA 72 AND 720.

1 / FA2 TYPICAL MOUNTING HEIGHT DETAIL

NOT TO SCALE

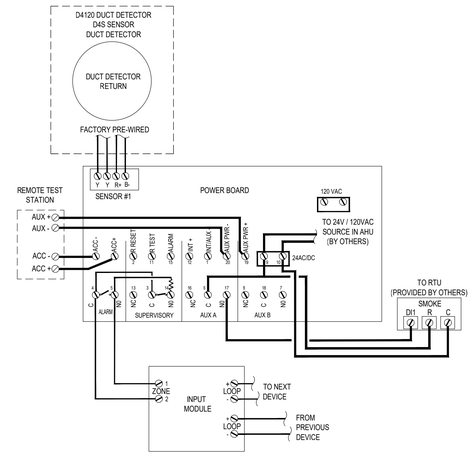

NOTES:

1. DUCT SMOKE DETECTORS SHALL BE POWERED FROM THE ASSOCIATED AIR HANDLING UNIT (AHU) AND MONITORED BY THE FIRE ALARM CONTROL PANEL (FACP).
2. THE FACP SHALL SUPERVISE ALL POWER CONNECTIONS AND TROUBLE CONDITIONS.
3. LOSS OF POWER TO A DUCT DETECTOR (AHU SUPPLIED POWER) SHALL TRANSMIT A TROUBLE CONDITION TO THE FACP.
4. CONFIGURE THE DUCT SMOKE DETECTOR TO UTILIZE THE AUXILIARY ALARM CONTACTS OF THE DUCT SMOKE DETECTOR TO SHUTDOWN THE RTU THROUGH THE INDIVIDUAL RTU CONTROLLER. PROVIDE ANY REQUIRED INTERMEDIATE RELAYS FOR CONNECTIONS TO HVAC CONTROLS. PROVIDE CABLING AND WIRING CONNECTIONS TO HVAC CONTROLS. FINAL TERMINATIONS TO HVAC CONTROLS ARE BY MECHANICAL OR CONTROLS CONTRACTOR.

2 / FA2 DUCT DETECTOR WIRING DETAIL

NOT TO SCALE

INSTALLATION NOTES

1. ALL WORK SHALL BE IN ACCORDANCE WITH NFPA STANDARDS AND ALL LOCAL ADOPTED CODES.
2. FIRE ALARM CABLING SHALL BE ACCEPTABLE TO THE FIRE ALARM EQUIPMENT MANUFACTURER FOR THE INTENDED PURPOSE. SHOULD MANUFACTURER OF FIRE ALARM EQUIPMENT REQUIRE DIFFERENT TYPE OR SIZE OF CABLE THAN HEREIN SPECIFIED, THE LARGER OR MORE STRINGENT TYPE OF CABLE SHALL BE USED.
3. ALL FIRE ALARM CABLING SHALL BE FIRE POWER LIMITED TYPE FPL, FPLR, OR FPLP AS REQUIRED BY THE NATIONAL ELECTRICAL CODE. SEE WIRING LEGEND FOR CABLE TYPES AND SIZES
4. PROVIDE ALL REQUIRED CONDUIT, BACKBOXES, AND FITTINGS FOR THE FIRE ALARM SYSTEM CABLING.
5. FIRE ALARM CABLING SHALL BE RED IN COLOR.
6. FIRE ALARM CABLING SHALL NOT BE PAINTED.
7. CABLE ROUTING SHOWN ON DRAWINGS IS FOR INTENT. EXACT ROUTING SHALL BE COORDINATED WITH OTHER TRADES IN THE FIELD. SEE DRAWING NOTES AND DETAILS FOR ACCEPTABLE INSTALLATION METHODS.
8. ALL CABLE RUNS SHALL BE NEATLY BUNDLED, WRAPPED TIGHT AND PROPERLY SECURED. ANY CABLING NOT INSTALLED IN A NEAT AND PROFESSIONAL MANNER SHALL BE PULLED OUT AND RE-RUN BY INSTALLER AT NO ADDITIONAL COST TO OWNER.
9. CONTRACTOR RUNNING CABLING MUST MARK BOTH ENDS OF CABLING, PROVIDE A WIRE LEGEND FOR ALL LOCATIONS, AND PROVIDE A CONTINUITY TEST LOG FOR EACH CABLE.
10. EXPOSED CABLING SHALL BE RUN PARALLEL AND PERPENDICULAR TO BUILDING STRUCTURE. EXPOSED CABLING SHALL NOT BE RUN IN A "SPAN" FASHION BETWEEN BAR JOISTS OR BEAMS (I.E.: CABLING SHALL BE ROUTED ALONG PATH OF JOISTS AND BEAMS). ALL CABLING SHALL BE SECURED TO THE STRUCTURAL CEILING BETWEEN JOISTS OR BEAMS.
11. ALL CABLING SHALL BE SUPPORTED FROM BUILDING STRUCTURE AND NOT FROM GRID, TILES OR SUPPORT WIRES. EXPOSED CABLING SHALL BE SUPPORTED BY BUILDING STRUCTURE AT NO MORE THAN FIVE (5) FOOT INTERVALS USING APPROVED "O" RINGS AND "J" HOOKS.
12. ALL FIRE ALARM CABLING BELOW THE STRUCTURE, IN ELECTRICAL AND MECHANICAL ROOMS (SUBJECT TO PHYSICAL DAMAGE), CONCEALED ABOVE CEILINGS OR IN PARTITIONS (SUBJECT TO PHYSICAL DAMAGE) SHALL BE INSTALLED IN METALLIC CONDUIT.
13. ALL POWER LIMITED FIRE ALARM CABLING ABOVE THE STRUCTURE, ABOVE LAY-IN CEILINGS, OR CONCEALED ABOVE CEILINGS OR IN PARTITIONS (NOT SUBJECT TO PHYSICAL DAMAGE) ARE NOT REQUIRED TO BE INSTALLED IN CONDUIT.
14. ALL NON-POWER LIMITED FIRE ALARM CABLING FOR THE FIRE ALARM SYSTEM SHALL BE INSTALLED IN CONDUIT.
15. ALL CONDUIT SHALL BE TERMINATED AT THE BAR JOIST LEVEL WITH SOME FORM OF GROMMET OR BOX CONNECTOR.
16. ALL CONDUIT LOCATED IN DRYWALL SHALL BE TERMINATED NO LESS THAN SIX (6) INCHES ABOVE THE CEILING TILE.
17. FOR DRYWALL APPLICATIONS, ALL CONDUIT AND BACKBOXES SHALL BE RECESSED INSIDE THE WALL.
18. ALL FIRE ALARM CABLING IN FINISHED AREAS SHALL BE CONCEALED.
19. COORDINATE DRILLING OF ANY HOLES (I.E. COLUMN PENETRATIONS) WITH THE OWNER'S REPRESENTATIVE AND ALL OTHER TRADES PRIOR TO INSTALLATION.
20. ALL FIRE ALARM DEVICES AND APPLIANCES SHALL BE INSTALLED IN OR ON A PROPER BACKBOX. NO DEVICES OR APPLIANCE SHALL BE INSTALLED WITHOUT A BACKBOX.
21. ALL CABLING, CONDUIT, AND BACKBOXES SHALL BE PROPERLY SUPPORTED AND SEISMICALLY BRACED, AS REQUIRED BY ALL APPLICABLE CODES AND THE LOCAL JURISDICTION.
22. ALL WIRING CONDUCTORS ENTERING FIRE ALARM PANEL(S) SHALL BE IN CONDUIT AND ENTER FROM THE SIDE OF THE FIRE ALARM PANEL(S).
23. CONDUIT FILL SHALL NOT EXCEED 40%.
24. ALL FIRE ALARM JUNCTION BOXES SHALL BE RED IN COLOR.
25. ALL FIRE ALARM CABLING RISERS SHALL BE INSTALLED IN EMT CONDUIT.

GENERAL PROGRAMMING NOTES

1. COORDINATE SPECIFIC ALPHANUMERIC DESCRIPTIONS WITH THE OWNER PRIOR TO SYSTEM PROGRAMMING.

FIRESTOP NOTES

1. ALL THROUGH-PENETRATIONS OF FIRE-RATED WALLS AND FLOORS SHALL BE FIRE-STOPPED.
2. FIRE-RATED GYPSUM BOARD WALLS CONSTRUCTED AS DESCRIBED IN THE INDIVIDUAL U300 OR U400 SERIES DESIGNS IN THE U.L. FIRE RESISTANCE DIRECTORY (GENERALLY DOUBLE THICKNESS WALLBOARD) SHALL BE FIRE-STOPPED WITH U.L. SYSTEMS.
3. ALL REINFORCED LIGHTWEIGHT OR NORMAL WEIGHT CONCRETE FLOORS OR WALLS, AND ALL U.L. CLASSIFIED CONCRETE BLOCK WALLS SHALL BE FIRE-STOPPED WITH U.L. SYSTEMS.

GENERAL NOTES

1. THE FIRE ALARM SYSTEM SHALL OPERATE AS A CONTINUATION OF THE LANDLORD FIRE ALARM CONTROL PANEL. ALL NEW FIRE ALARM DEVICES WITHIN THE DOLLAR TREE SPACE SHALL BE CONNECTED DIRECTLY TO THE EXISTING FIRE ALARM CONTROL PANEL. THE FIRE ALARM CONTROL PANEL SHALL TRANSMIT FIRE ALARM, SUPERVISORY, AND TROUBLE SIGNALS OFF-SITE AS CURRENTLY CONFIGURED.
2. EXISTING FIRE ALARM CIRCUITS SHALL REMAIN AS CURRENTLY CONFIGURED. NEW FIRE ALARM CIRCUITS SHALL MEET THE FOLLOWING MINIMUM REQUIREMENTS:
   - SUPERVISORY CIRCUITS - CLASS B
   - SIGNALING LINE CIRCUITS (SLC) - CLASS B
   - AUXILIARY CIRCUITS - CLASS B
   - NOTIFICATION APPLIANCE CIRCUITS (NAC) - CLASS B
   - CIRCUITS FOR RELAY COIL OPERATION SHALL BE 24 VDC MAXIMUM WITH A SEPARATE OR INTEGRAL FIELD COLLAPSING DIODE.
3. THE EXISTING FIRE ALARM CONTROL PANEL (FACP) AND ASSOCIATED EQUIPMENT LOCATED OUTSIDE THE DOLLAR TREE SPACE SHALL REMAIN AS CURRENTLY CONFIGURED. FIELD VERIFY THAT ALL CABINETS HAVE A HINGED DOOR KEYED IN COMMON WITH ALL OTHER KEYED DEVICES THROUGHOUT THE SYSTEM.
4. THE EXISTING SPRINKLER WATERFLOW AND CONTROL VALVE TAMPER SWITCHES SERVING DOLLAR TREE SPACE ARE LOCATED IN THE COMMON SPRINKLER RISER ROOM AND SHALL REMAIN AS CURRENTLY CONFIGURED.
5. THE INSTALLING FIRE ALARM CONTRACTOR SHALL FIELD VERIFY EXISTING FIRE ALARM CONTROL PANEL (FACP) HAS SUFFICIENT STANDBY SECONDARY BATTERY CAPACITY TO ACCOMMODATE THE NEW FIRE ALARM EQUIPMENT. IF ADEQUATE SECONDARY BATTERY CAPACITY IS NOT PROVIDED, CONTRACTOR SHALL PROVIDE LARGER BATTERIES WITHOUT EXCEEDING EXISTING FACP MANUFACTURERS CHARGING CAPABILITIES. BATTERY CABINET SHALL BE PROVIDED AS NEEDED.
6. UPON LOSS OF BUILDING POWER, THE ENTIRE SYSTEM SHALL TRANSFER TO SECONDARY POWER WITHIN TEN (10) SECONDS, AND WITHOUT LOSS OF SIGNALS. THE SYSTEM SHALL OPERATE UNDER SECONDARY POWER IN NORMAL OR TROUBLE CONDITIONS FOR TWENTY-FOUR (24) HOURS AND HAVE SUFFICIENT POWER TO SUPPORT COMPLETE ALARM CONDITION OPERATION FOR A SUBSEQUENT FIVE (5) MINUTES AT MAXIMUM CONNECTED LOAD.
7. DEVICES AND APPLIANCE LOCATIONS AS SHOWN ON THE FIRE ALARM PLANS ARE NOT DIMENSIONED FOR EXACT INSTALLATION. COORDINATE EXACT PLACEMENT OF ALL DEVICES AND APPLIANCES WITH THE ARCHITECTURAL PLANS AND GENERAL CONTRACTOR PRIOR TO INSTALLATION.
8. ARCHITECTURAL, STRUCTURAL, MECHANICAL AND ELECTRICAL BACKGROUND INFORMATION IS SHOWN FOR COORDINATION PURPOSES ONLY. REFER TO THE PROPER DRAWINGS FOR EXACT LOCATIONS, SIZES AND QUANTITIES OF OTHER TRADES' WORK.
9. ALL THROUGH-PENETRATIONS OF FIRE-RATED WALLS AND FLOORS SHALL BE FIRE-STOPPED.
10. ALL JUNCTION BOXES SHALL BE ACCESSIBLE FOR SERVICE. PROVIDE ANY REQUIRED ACCESS PANELS.
11. ALL SIGNALING LINE CIRCUITS, INITIATING DEVICE CIRCUITS, AND NOTIFICATION APPLIANCE CIRCUITS SHALL BE SUPERVISED IN ACCORDANCE WITH NFPA 72.
12. PROVIDE ANY REQUIRED SEISMIC BRACING FOR ALL FIRE ALARM SYSTEM DEVICES, CONDUIT AND BACKBOXES.
13. PROVIDE A PRINTED LABEL FOR EACH INITIATING DEVICE INDICATING THE SPECIFIC ADDRESS FOR THAT DEVICE. THE LABEL SHALL INCLUDE THE PROGRAMMING ADDRESS AND DEVICE NUMBER. THE LABEL SHALL BE LOCATED ON THE BASE OF ALL DETECTORS AND THE COVER PLATES OF EACH ADDRESSABLE DEVICE.

ENGINEER OF RECORD:
JACOB P. HEMKE, PE
LICENSE NO. 086219

CODE CONSULTANTS
PROFESSIONAL ENGINEERS, PC
215 WEST 40TH ST., 10TH FLOOR
NEW YORK, NY 10018
PHONE: 212-216-0506
CORPORATE CERTIFICATE OF AUTHORITY NO. 019955

WARNING: IT IS A VIOLATION OF THE NEW YORK STATE EDUCATION LAW, ARTICLE 145, SECTION 7209 FOR ANY PERSON, UNLESS ACTING UNDER THE DIRECTION OF A LICENSED PROFESSIONAL ENGINEER, TO ALTER THIS DOCUMENT IN ANY WAY.

STATE OF NEW YORK · JACOB P. HEMKE · 086219 · LICENSED PROFESSIONAL ENGINEER

2022-06-23

06/15/22

CODE CONSULTANTS
PROFESSIONAL ENGINEERS, PC
215 WEST 40TH STREET, 10TH FLOOR
NEW YORK, NEW YORK 10018
212-216-0506
www.codeconsultants.com

mark	date	by	description
revisions			

date	06/15/2022
project	2022.27 / D13216
designed	VA
drawn	
checked	ACD

Dean Associates
Architects Incorporated
Architecture & Interior Design
7 Kimball Lane Suite E6
Lynnfield MA 01940
p: 781.397.8092 f: 781.397.8094
www.deanassoc.com

project

DOLLAR TREE

166 S. LIBERTY DRIVE - DEAL #13216 / STORE #2573

STONY POINT, NY 10980

drawing

FIRE ALARM NOTES, CALCULATIONS AND MATRIX

sheet

FA2