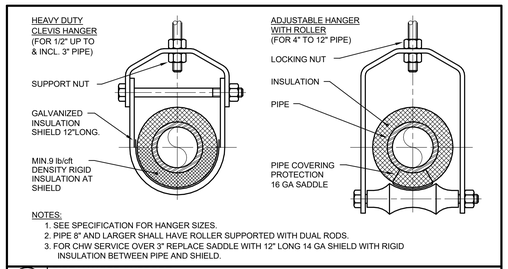

NOTES:
1. SEE SPECIFICATION FOR HANGER SIZES.
2. PIPE 8" AND LARGER SHALL HAVE ROLLER SUPPORTED WITH DUAL RODS.
3. FOR CHW SERVICE OVER 3" REPLACE SADDLE WITH 12" LONG 14 GA SHIELD WITH RIGID INSULATION BETWEEN PIPE AND SHIELD.

2 PIPE HANGER SUPPORT
SCALE: NTS H02-01

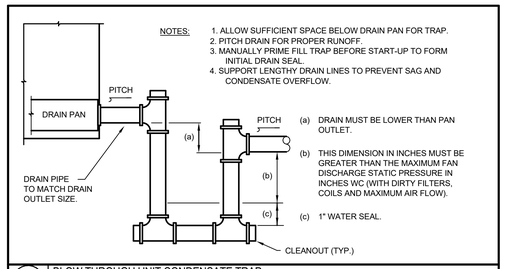

NOTES:
1. ALLOW SUFFICIENT SPACE BELOW DRAIN PAN FOR TRAP.
2. PITCH DRAIN FOR PROPER RUNOFF.
3. MANUALLY PRIME FILL TRAP BEFORE START-UP TO FORM INITIAL DRAIN SEAL.
4. SUPPORT LENGTHY DRAIN LINES TO PREVENT SAG AND CONDENSATE OVERFLOW.

(a) DRAIN MUST BE LOWER THAN PAN OUTLET.
(b) THIS DIMENSION IN INCHES MUST BE GREATER THAN THE MAXIMUM FAN DISCHARGE STATIC PRESSURE IN INCHES WC (WITH DIRTY FILTERS, COILS AND MAXIMUM AIR FLOW).
(c) 1" WATER SEAL.

1 BLOW THROUGH UNIT CONDENSATE TRAP
SCALE: NTS H03-09

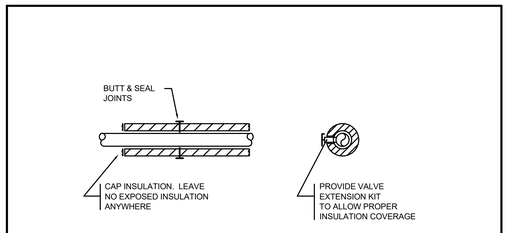

4 TYPICAL PIPE INSULATION & VALVE HANDLE EXTENSION
SCALE: NTS H03-06

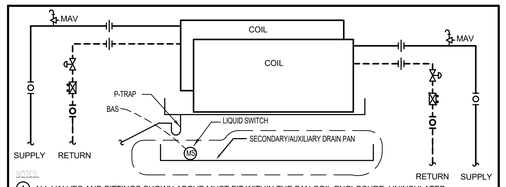

NOTES:
1. ALL VALVES AND FITTINGS SHOWN ABOVE MUST FIT WITHIN THE FAN COIL ENCLOSURE. UNINSULATED PIPE AND VALVES SHALL BE OVER EXTENDED DRAIN PAN.
2. ALL PIPING SHALL BE TYPE "L" COPPER. ANY CONNECTION TO STEEL SHALL BE MADE WITH DI-ELECTRIC UNION. BE OVER EXTENDED DRAIN PAN.
3. PROVIDE SECONDARY DRAIN PAN FOR ALL FAN COIL UNITS MOUNTED ABOVE GYPSUM BOARD CEILINGS

3 4-PIPE FAN COIL, 2-WAY CONTROL VALVES
SCALE: NTS H12-13

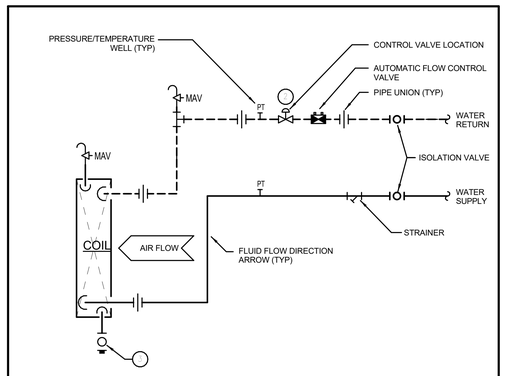

NOTES:

1) CONTRACTOR SHALL PROVIDE PIPE REDUCER FITTINGS AND/OR PIPE INCREASER FITTINGS WHERE REQUIRED TO FACILITATE
INSTALLATION OF THE PIPING AND VALVE ASSEMBLY. CONTRACTOR SHALL ARRANGE PIPING, UNIONS (OR FLANGE BODIES)
AND VALVES SO AS TO FACILITATE THE REMOVAL OF THE COIL(S) WITHOUT THE NEED TO MODIFY PIPING.
2) TWO-WAY MODULATING FLOW CONTROL VALVE.
3) DRAIN-OFF VALVE

WATER COIL PIPING CONNECTION DETAIL: 2-INCH PIPE SIZE AND SMALLER (TWO-WAY CONTROL VALVE)
NOT TO SCALE
23XXXX-001

CROCKFORDS - RESORTS WORLD CATSKILLS

888 resorts World Dr
Monticello, NY 12701

JCJARCHITECTURE
120 HUYSHOPE AVENUE
SUITE 400
HARTFORD, CT 06106
860.247.9226

© 2021 JCJ Architecture

CONSULTANT:

VANDERWEIL
R.G. Vanderweil Engineers, LLP
274 Summer Street
Boston, MA 02210
617.423.7423 TEL
617.423.7461 FAX
vanderweil.com

BIDDING & CONSTRUCTION
07/06/2022

ISSUE	07/06/2022
JOB	30860.00
DRAWN	Author
SCALE	12" = 1'-0"

REVISIONS

DETAILS

M-13

7/6/2022 5:53:00 PM
DRAWING PRINTED FULL SIZE (100%) = 30"x42" (DRAWING PRINTED HALF SIZE (50%) WILL FIT ON A SHEET 15"x22" WITH 1 1/2" OF EXTRA SPACE ON ALL FOUR SIDES. DRAWING PRINTED NEARLY THIRD SIZE (37.5%) = 11"x16" (NEXT SIZE) WILL FIT TIGHTLY ON 11"x17" (NEXT SIZE). 1/2", 1/4", 1/8", 1/16" AND 1/32" VIEW SCALES WILL TRANSLATE BY MULTIPLYING THE DENOMINATOR EQUIVALENT AND CHANGE THE NUMERATOR TO 1. EXAMPLE 3/4"=1'-0" AT 37.5% WILL BE 3/64"=1'-0" FOR SCALES AT 3/4", 3/8", 3/16" AND 3/32" THE TRANSLATION IS CLOSE ENOUGH TO USE THE DENOMINATOR EQUIVALENT AND CHANGE THE NUMERATOR TO 1. EXAMPLE 3/4"=1'-0" AT 37.5% WILL BE NEARLY TO 1/4"=1'-0"