# PLUMBING FIXTURE SCHEDULE

| MARK | DESCRIPTION | MINIMUM CONNECTIONS INCHES COLD | HOT | WASTE | VENT | REMARKS | MANUFACTURER OR APPROVED EQUAL |
|---|---|---|---|---|---|---|---|
| P-1 | WATER CLOSET – HANDICAP | 1 | -- | 3 | 1 1/2 | A.D.A. COMPLIANT | KOHLER K-96057-0 FLOOR MOUNTED/OUTLET FLUSH VALVE TOILET W/ K-4670-CA-0 SEAT AND SLOAN 111-1.6 CHROME PLATED MANUAL FLUSH VALVE (1.6 GPF). A.D.A. COMPLIANT. |
| P-2 | WALL HUNG LAVATORY – HANDICAP | 1/2 | 1/2 | 2 | 1 1/2 | A.D.A. COMPLIANT W/ TEMPERING VALVE | KOHLER MODEL K-2035-1 WALL HUNG W/ K-12181 SINGLE LEVER FAUCET, GRID DRAIN AND INSULATED DRAIN/HOT/COLD WATER, TEMPERING VALVE, AND WALL CARRIER. A.D.A. COMPLIANT. |
| P-3 | MOP SERVICE SINK | 3/4 | 3/4 | 3 | 1 1/2 | W/ VACUUM BREAKER | SERVICEPTOR MODEL SB-503 36"X36"X12"H MOP SINK W/ 3" DRAIN, TILING FLANGE, STERN WILLIAMS T-10-VB FAUCET W/ VACUUM BREAK, HOSE, AND BOBRICK B-223 MOP HOLDER. |
| P-4 | FLOOR DRAIN W/ TRAP PRIMER | 1/2 | -- | 4 | 2 | | JOSAM 30004-A-50 FLOOR DRAIN W/ ADJUSTABLE STRAINER AND PPP* PRIME-RITE TRAP PRIMER VALVE/DISTRIBUTION UNIT. |
| P-5 | FLOOR DRAIN W/ TRAP PRIMER | 1/2 | -- | 3 | 1 1/2 | | JOSAM 30003-A-50 FLOOR DRAIN W/ ADJUSTABLE STRAINER AND PPP* PRIME-RITE TRAP PRIMER VALVE/DISTRIBUTION UNIT. |
| P-6 | BATHING TUB AND SURROUND | 3/4 | 3/4 | 2 | 1 1/2 | | TRISTAR VET 800-00-59 BATHING TUB W/ SWIVEL RAMP STS6032CP BATHTUB W/ SURROUND, T&S BRASS MODEL B-0175 PRE-RINSE FLEXIBLE HOSE/FAUCET, WALL HOOK, WALL BRACKET, DRAIN W/ AIR GAP TO JOSAM 49303 8"SQ X 6"D FLOOR SINK W/ REMOVABLE GRATE, SEDIMENT BUCKET, AND STAINLESS STEEL MESH BUCKET LINER. |
| P-7 | HAIR TRAP | -- | -- | 2 | -- | | PROVIDE J.R. SMITH 8750T LINT TRAP ON WASTE LINE. |
| P-8 | HYDROSURGE UNIT | 3/4 | 3/4 | -- | -- | | INSTALL OWNER FURNISHED HYDROSURGE UNIT W/ INSULATED HOT/COLD WATER, SHUT-OFF VALVES, FITTINGS, T&P MIXING VALVE, HOSE BIBB, & VACUUM BREAKER. |
| P-9 | FROST-PROOF HOSE BIBB | 3/4 | -- | -- | -- | W/ VACUUM BREAKER | JOSAM HYDRASAN I SERIES 71050 OR APPROVED EQUAL, KEY CONTROL FITTING, W/ INTEGRAL VACUUM BREAKER. |
| P-10 | S.S. SINGLE BOWL SINK | 1/2 | 1/2 | 2 | 1 1/2 | W/ TEMPERING VALVE | ELKAY LRAD151755 W/ CHICAGO 895-317CP FAUCET W/ SWING SPOUT, LOW-FLOW AERATOR, AND WRISTBLADE HANDLES, HOT/COLD WATER, STOPS, AND CHROME STRAINER – A.D.A. COMPLIANT. |
| P-11 | S.S. SINGLE BOWL SINK | 1/2 | 1/2 | 2 | 1 1/2 | W/ TEMPERING VALVE | ELKAY LRAD221955 W/ MOEN 8248 FAUCET W/ SWING SPOUT, LOW-FLOW AERATOR, AND WRISTBLADE HANDLES, HOT/COLD WATER, STOPS, AND CHROME STRAINER – A.D.A. COMPLIANT. |
| P-12 | S.S. DOUBLE BOWL SINK | 1/2 | 1/2 | 2 | 1 1/2 | W/ TEMPERING VALVE | ELKAY LRAD332255, 33X22 DOUBLE BOWL S.S. SINK W/ MOEN 8244 FAUCET W/ SWING SPOUT AND WRISTBLADE HANDLES, HOT/COLD WATER, STOPS, AND CHROME STRAINER – A.D.A. COMPLIANT. |
| P-13 | GARBAGE DISPOSAL | -- | -- | 1 1/2 | -- | | PROVIDE 1/2 HP ISE BADGER GARBAGE DISPOSAL. |
| P-14 | BOWLWASHER | -- | -- | 2 | -- | | PROVIDE DRAIN & HOT WATER CONNECTIONS FOR OWNER FURNISHED BOWLWASHER. PROVIDE AN INDIRECT DRAIN TO A JOSAM 49303 8"SQ X 6"D FLOOR SINK. PROVIDE BACKFLOW PREVENTER ON HW CONNECTION. |
| P-15 | SCRUB SINK | 1/2 | 1/2 | 2 | 1 1/2 | | ELKAY EWS2520W4C WALL SCRUB SINK W/ GOOSENECK FAUCET, 4"WRISTBLADE HANDLES, MIXING VALVE, FITTINGS, HOSES, STAINLESS STEEL STRAINER, AND STOPS. PROVIDE WALL CARRIER. |
| P-16 | 100 GALLON GAS WATER HEATER | 2 | 2 | -- | -- | | A.O. SMITH 97% EFFICIENT MODEL BTH-199 WATER HEATER W/ FLEXIBLE VENTING, T&P RELIEF, POWER BURNER, 261 GPH @ 90°F RISE, 199,900 BTUH INPUT, ELECTRIC IGNITION. SET WATER TEMPERATURE AT A MAXIMUM 120°F. |
| P-17 | HOT WATER EXPANSION TANK | 3/4 | -- | -- | -- | | AMTROL MODEL ST-30V, 150 PSIG, 14 GALLONS, MAXIMUM 200 F OPERATING TEMPERATURE, ASME APPROVED, AND 150 PSIG WORKING PRESSURE. INSTALL ON COLD WATER LINE. |
| P-18 | HOT WATER CIRCULATOR PUMP | -- | 3/4 | -- | -- | | B&G MODEL PL-55B, 7 GPM @ 40 FT HEAD, BRONZE BODY, 2/5 HP, 115/1/60, 175 PSI MAXIMUM WORKING PRESSURE AND 225 F MAX. OPERATING TEMPERATURE. |
| P-19 | FLUSH VALVE (3.5 G.P.F.) | 1 | -- | -- | -- | | SLOAN 110ESS (PRODUCT CODE 3450147) FLUSH VALVE ABOVE CEILING, HIGH BACK-PRESSURE VACUUM BREAKER, SIPHON-GUARD PROTECTION W/ EL172A REMOTE WALL PUSH BUTTON FLUSH OPERATOR, 115V POWER, EL154 TRANSFORMER, & CONTROL WIRING FROM PUSH BUTTON TO VALVE. |
| P-20 | TRENCH DRAIN W/ BENCH | -- | -- | 4 | 2 | W/ RECESSED SLAB | TDS MODEL NDS DURASLOPE PRE-SLOPED TRENCH DRAIN W/ BENCH, DS-340 CATCH BASIN (INLET/OUTLET ON BOTH SIDES), FLUSH TRAP, AND P-19 FLUSH VALVES – SEE DETAIL ON THIS DWG AND ARCHITECTURAL DETAILS. |
| P-21 | FLUSHING RIM/TRAP DRAIN | 1 | -- | 4 | 2 | | ZURN THOROFLUSH DRAIN Z-310-C-WB-FG (FREE SET GRATE) OR Z-300-C-WB-FG (FREE SET GRATE) W/ 1"FLUSH TAP CONNECTION W/ DRAIN EXTENSION FOR 2ND 3/4"FLUSH TAP AT TRAP & P-19 FLUSH VALVE – SEE DETAIL ON THIS DWG. |
| P-22 | REFRIGERATOR ICE BOX/VALVE | 1/2 | -- | -- | -- | | OATEY ICE MAKER RECESSED WALL BOX 38952 W/ VALVE AND COLD WATER PIPING AND FITTINGS. |
| P-23 | WET TABLE | 3/4 | 3/4 | 3 | 1 1/2 | W/ P-7 HAIR TRAP & TEMPERING VALVE | INSTALL OWNER FURNISHED WET TABLE. PROVIDE SHUT-OFF HOT AND COLD WATER VALVES, DRAIN W/ P-7 HAIR TRAP AND VENT. PROVIDE BACKFLOW PREVENTER ON HOT AND COLD WATER LINES. |
| P-24 | DRY CENTRAL VACUUM SYSTEM | -- | -- | -- | -- | W/ DRY INTERCEPTOR | CENTRAL DRY VACUUM SYSTEM TO BE PROVIDED AND INSTALLED BY SMT MFR. COORDINATE W/ SMT MFR ON EXACT REQUIREMENTS. |
| P-25 | DRY VACUUM REMOTE OUTLET | -- | -- | -- | -- | | SMT MANUFACTURER INSTALLED DRY CENTRAL VACUUM OUTLET. SEE ARCHITECTURAL DWGS FOR EXACT LOCATIONS. |
| P-26 | WET/DRY CENTRAL VACUUM SYSTEM | 3/4 | -- | 3 | 1 1/2 | | PROVIDE NIBCO OR EQUAL 3/4"CW INTERIOR HOSE BIB (LOCATION PER SMT MFR) AND P-3 MOP SINK FOR DRAIN FOR CONNECTION OF SPRAY MASTER TECHNOLOGIES CENTRAL WET/DRY VACUUM SYSTEM TO BE PROVIDED AND INSTALLED BY SMT MFR. PROVIDE BACKFLOW PREVENTER ON CW SUPPLIES. COORDINATE W/ SMT MFR ON EXACT REQUIREMENTS. |
| P-27 | WET/DRY VACUUM REMOTE OUTLET | -- | -- | -- | -- | | SMT MANUFACTURER INSTALLED WET/DRY CENTRAL VACUUM OUTLET. SEE ARCHITECTURAL DWGS FOR EXACT LOCATIONS. |
| P-28 | CENTRAL WASHDOWN SYSTEM | 3/4 | -- | -- | -- | | PROVIDE NIBCO OR EQUAL 3/4"CW INTERIOR HOSE BIB AT MINIMUM 12"A.F.F. FOR CONNECTION OF SPRAY MASTER TECHNOLOGIES CENTRAL WASHDOWN SYSTEM TO BE PROVIDED AND INSTALLED BY SMT MFR. |
| P-29 | WALL MOUNTED SMT CONTROL UNIT | -- | -- | -- | -- | | SMT MANUFACTURER INSTALLED WALL MOUNTED CONTROL UNIT. SEE ARCHITECTURAL DWGS FOR EXACT LOCATIONS. |
| P-30 | PRESSURE WASHER HOSE REEL | 3/8 | -- | -- | -- | | SMT MANUFACTURER INSTALLED HIGH PRESSURE HOSE REEL. SEE ARCHITECTURAL DRAWINGS FOR EXACT LOCATIONS. |
| P-31 | COMMERCIAL WASHER CONNECTIONS | 1 | 1 | 6 | 3 | SEE DRAIN TROUGH DETAIL ON DWG P0.01 | 1"WATTS, NIBCO, OR EQUAL VALVES, 200 F, 200 PSI FLEXIBLE HOSE CONNECTIONS W/ DRAIN TO AIR GAP TO FLOOR TROUGH. INSTALL PER MANUFACTURER. |
| P-32 | WASHER CONNECTIONS | 3/4 | 3/4 | 3 | 1 1/2 | | NIBCO FAUCET VALVES & GUY GRAY BBED-200TS WASHER BOX W/ DRAIN THRU FITROL 160 WASHING MACHINE FILTER, VENT, HOT & COLD WATER PIPING, RECEPTACLE, AND WATER HAMMER ARRESTOR (W.H.A.) ON HOT & COLD WATER LINES. |
| P-33 | BOWL WASHING TABLE/SINK/FAUCET | 3/4 | 3/4 | 2 | 1 1/2 | | REGENCY 600DDT48 RT SOILED DISH TABLE W/ DRAIN & VENT AND HOT & COLD WATER CONNECTIONS TO T&S BRASS B-0175 PRE-RINSE FAUCET W/ B-0166 HANGER HOOK. |
| P-34 | CAT CARRIER DUNK SINK | 1/2 | 1/2 | 2 | 1 1/2 | | MUSTEE 28CF 24"X40"H FLOOR MOUNTED UTILITY SINK W/ 2"DRAIN AND PULL-OUT FAUCET. |
| P-35 | CAT BATHING TUB | 1/2 | 1/2 | 2 | 1 1/2 | W/ P-7 HAIR TRAP & TEMPERING VALVE | TEHILA US6000GRY FLOOR MOUNTED UTILITY SINK W/ 2"DRAIN AND PULL-OUT FAUCET. |
| P-36 | OXYGEN CEILING OUTLET | -- | -- | -- | -- | | G.C. PROVIDED & INSTALLED OXYGEN OUTLET W/ D.I.S.S. CONNECTION, BOX, ADAPTERS, SHUTOFF VALVE, COVER TRIM, AND IDENTIFICATION TYP. SEE ARCHITECTURAL DRAWINGS FOR EXACT LOCATIONS. COORDINATE CONNECTION TYPE WITH OWNER/ARCHITECT (TYPICAL ALL MEDICAL GAS OUTLETS). |
| P-37 | SCAVENGER CEILING OUTLET | -- | -- | -- | -- | | G.C. PROVIDED & INSTALLED SCAVENGER OUTLET W/ D.I.S.S. CONNECTION, BOX, ADAPTERS, SHUTOFF VALVE, COVER TRIM, AND IDENTIFICATION TYP. SEE ARCHITECTURAL DRAWINGS FOR EXACT LOCATIONS. COORDINATE CONNECTION TYPE WITH OWNER/ARCHITECT (TYPICAL ALL MEDICAL GAS OUTLETS). |
| P-38 | SUCTION CEILING OUTLET | -- | -- | -- | -- | | G.C. PROVIDED & INSTALLED SUCTION OUTLET W/ D.I.S.S. CONNECTION, BOX, ADAPTERS, SHUTOFF VALVE, COVER TRIM, AND IDENTIFICATION TYP. SEE ARCHITECTURAL DRAWINGS FOR EXACT LOCATIONS. COORDINATE CONNECTION TYPE WITH OWNER/ARCHITECT (TYPICAL ALL MEDICAL GAS OUTLETS). |
| P-39 | COMBINATION ANESTHESIA SCAVENGER LIQUID SUCTION MACHINE | -- | -- | -- | -- | | OWNER FURNISHED COMBINATION ANESTHESIA SCAVENGER/LIQUID SUCTION MACHINE. SYSTEM SHALL BE SIZED AND INSTALLED PER MEDICAL GAS SUPPLIER AND CODE. SIZE AND INSTALL EXHAUST TO EXTERIOR PER MANUFACTURER. |
| P-40 | BI-LEVEL WATER COOLER | 1/2 | -- | 2 | 1 1/2 | A.D.A. COMPLIANT | HALSEY TAYLOR MODEL HTHB-HAC8BLPV-WF W/ STAINLESS STEEL TOP, FILTER, BOTTLE FILLING STATION, AND MOUNTING HARDWARE. MOUNT PER A.D.A. LOW/HIGH AND CODE. |
| P-41 | OUTDOOR FLOOR DRAIN | 1/2 | -- | 3 | 1 1/2 | | OUTDOOR FLOOR DRAIN W/ STRAINER PER ARCHITECT AND WITHOUT P-TRAP. |
| P-42 | DECK MOUNTED EYEWASH | 1/2 | 1/2 | -- | -- | | BRADLEY MODEL S19-460 DECK MOUNTED EYE WASH FIXTURE W/ HOSE, VALVE, SPRAYHEAD, HOT & COLD WATER CONNECTION, & ASSE 1071 COMPLIANT EMERGENCY THERMOSTATIC MIXING VALVE. MOUNT PER OSHA REQUIREMENTS. |
| P-43 | COMBINATION ROOF/OVERFLOW DRAIN | -- | -- | 4 | -- | | JOSAM SERIES 22104-28 W/ CLAMPS, COLLARS, FITTINGS, PERFORATED S.S. GRAVEL GUARD AND ASSEMBLY PER MANUFACTURER AND CODE. |
| P-44 | DOWNSPOUT NOZZLE | -- | -- | 4 | -- | | JOSAM MODEL 25014-51-BS BRONZE SECONDARY ROOF DRAIN DOWNSPOUT NOZZLE W/ BIRDSCREEN. |

NOTES:

1. ALL FIXTURES SHALL BE WHITE UNLESS NOTED OTHERWISE.
2. ALL WORK SHALL COMPLY WITH ALL LOCAL AND STATE GOVERNING CODES AND PERMITS. CONTRACTOR SHALL OBTAIN AND PAY FOR ALL PLUMBING PERMITS AND INSTALL PER LOCAL CODE AND STATE PERMIT REQUIREMENTS.
3. ALL INTERIOR HOT AND COLD WATER LINES SHALL BE INSULATED. HOT WATER LINES AND EXPOSED DRAINS SHALL BE INSULATED W/ WHITE PLASTIC JACKET INSULATION TO PREVENT TOUCH BY HANDICAP (TRUEBRO LAV GUARD OR EQUAL). ALL ABOVE GRADE SANITARY AND STORM DRAINAGE LINES SHALL BE CAST IRON. ALL HORIZONTAL STORM DRAINAGE LINES SHALL BE INSULATED.
4. CONTRACTOR SHALL PROVIDE ALL NECESSARY FITTINGS, FIXTURES, & VALVES TO MAKE A COMPLETE AND OPERATING SYSTEM. ALL PIPING SHALL BE RUN INSIDE WALLS OR ABOVE CEILING UNLESS SHOWN OTHERWISE. ALL EXPOSED PIPING SHALL BE CHROME PLATED. ALL PIPE PENETRATIONS OF FIRE RATED CEILINGS AND WALLS SHALL HAVE FIRE RATED SEALANT/CAULKING PER MANUFACTURER AND CODE.
5. CONTRACTOR SHALL COORDINATE CONNECTION OF WATER, NATURAL GAS, AND SEWER SYSTEMS W/ SITE CONTRACTOR AND LOCAL UTILITY COMPANIES.
6. CONTRACTOR SHALL PROVIDE ALL MOUNTING HARDWARE AND ACCESSORIES TO INSTALL ALL FIXTURES. INSTALL HANDICAP FIXTURES IN COMPLIANCE W/ ADA AND LOCAL CODES.
7. PLUMBER/INSTALLER SHALL ENSURE THAT PIPES ARE ADEQUATELY INSULATED TO PREVENT FREEZING. PLUMBER SHALL USE FIBERGLASS INSULATION W/ VAPOR BARRIER (OWENS CORNING OR EQUAL). COLD WATER LINES SHALL HAVE MINIMUM 1/2"THICK INSULATION AND HOT WATER AND HOT WATER RETURN LINES SHALL HAVE MINIMUM 1"THICK INSULATION.
8. PLUMBING CONTRACTOR SHALL FIELD COORDINATE FINAL LOCATION OF WATER, SANITARY SEWER, GAS, AND VENT, PIPING W/ G.C., STRUCTURAL, MECHANICAL, AND AND ELECTRICAL CONTRACTORS AND ADJUST FINAL LOCATIONS BASED ON FINAL FIELD CONDITIONS TO AVOID INTERFERENCES.
9. PROVIDE AND INSTALL MEDIUM (2 PSI) PRESSURE GAS ALL NEW GAS FIRED EQUIPMENT. PROVIDE SHUTOFF VALVES, MEDIUM PRESSURE (2 PSI) REGULATORS, AND DRIP LEGS (ON UNITS IN CONDITIONED SPACE ONLY).
10. PERFORM A WATER ANALYSIS. IF HARDNESS EXCEEDS 7 GRAINS PER GALLON, PROPOSE A WATER SOFTENING SYSTEM TO PROVIDE WATER W/ HARDNESS LESS THAN 7 GRAINS PER GALLON BASED ON THE WATER ANALYSIS RESULTS AND 82 GPM PEAK FLOW.
11. MEDICAL GAS SYSTEM DESIGN (INCLUDING EQUIPMENT AND PIPE SIZING) TO BE CONFIRMED AND ADJUSTED AS REQUIRED BY MEDICAL GAS SUPPLIER/INSTALLER.

FIRE PROTECTION SCOPE OF WORK:

OBTAIN THE SERVICES OF A STATE QUALIFIED AND LICENSED SPRINKLER CONTRACTOR TO DESIGN, OBTAIN NECESSARY STATE AND LOCAL APPROVALS OF DESIGN, AND REVISE THE EXISTING FIRE PROTECTION SPRINKLER SYSTEM PER LOCAL AND NFPA 13 CODE. FIRE PROTECTION CONTRACTOR SHALL SUBMIT 3 COPIES OF THE DESIGN CALCULATIONS, FLOW TESTS, ETC. FOR ARCHITECT/ENGINEER APPROVAL AND SUBMIT REQUIRED COPIES TO LOCAL FIRE AUTHORITIES FOR APPROVAL PRIOR TO INSTALLATION OF SYSTEM. FIRE PROTECTION CONTRACTOR SHALL COORDINATE WITH GENERAL CONTRACTOR, MECHANICAL, PLUMBING AND ELECTRICAL CONTRACTOR TO ADJUST FOR INTERFERENCES AND ADJUST SPRINKLER DESIGN AND LAYOUT ACCORDINGLY. FIRE PROTECTION CONTRACTOR SHALL FIELD TEST THE SPRINKLER SYSTEM PER STATE AND LOCAL CODE AND NFPA 13 STANDARD.

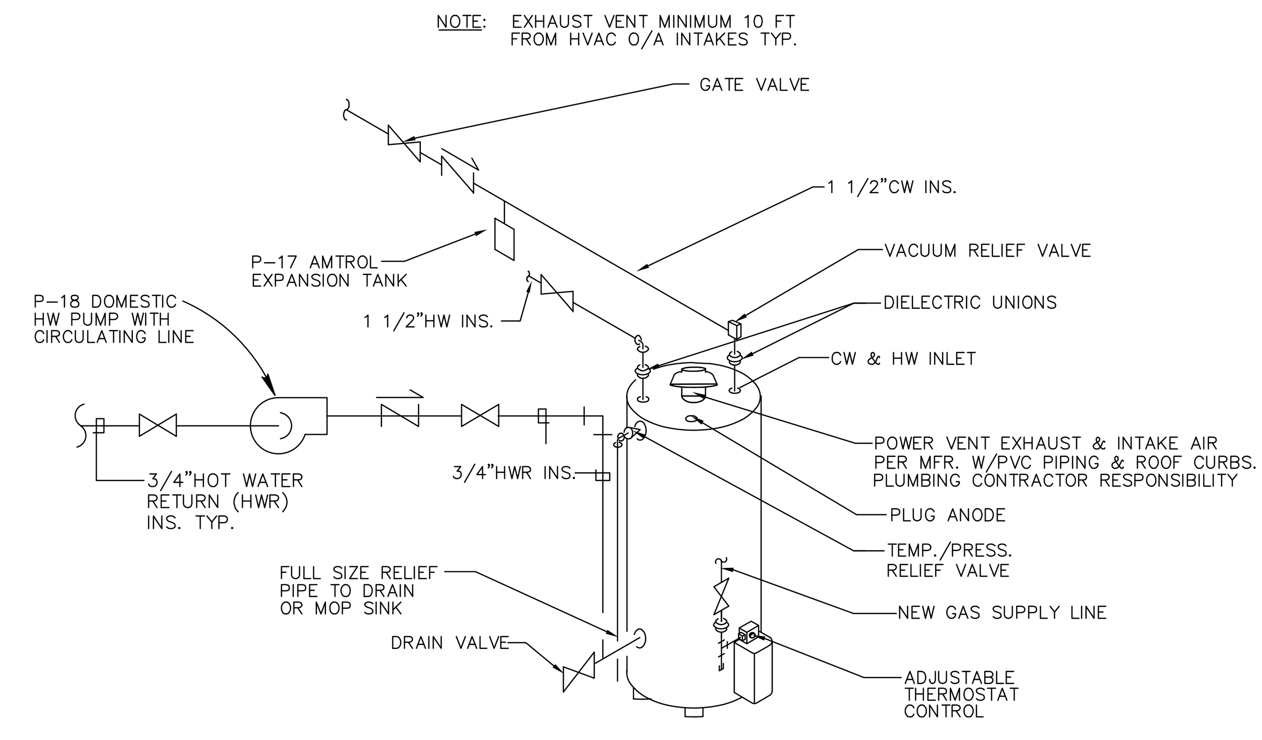

P-16 HOT WATER HEATER PIPING DETAIL
NOT TO SCALE

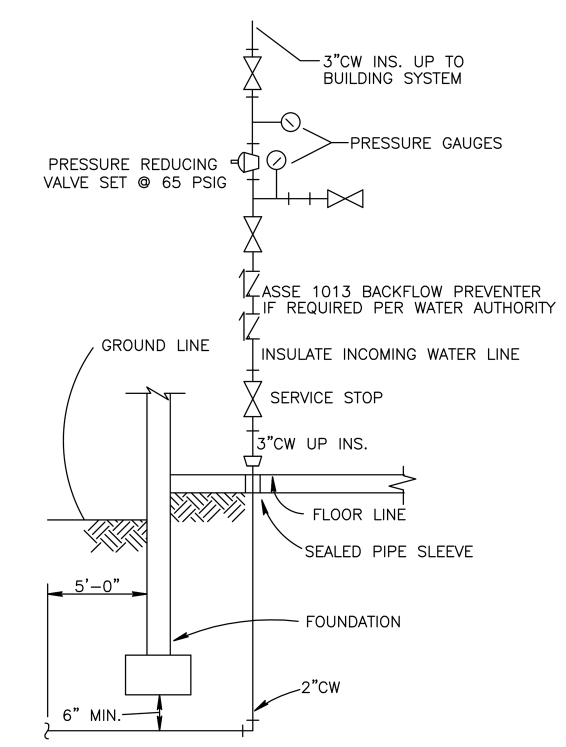

WATER SERVICE ENTRANCE DETAIL
NOT TO SCALE

# PLUMBING LEGEND

| | |
|---|---|
| W (heavy line) | SANITARY SEWER (W) UNDERGROUND |
| W | SANITARY SEWER (W) ABOVE GRADE |
| — V — | VENT (V) |
| — CW — | COLD WATER (CW) INSULATED 1" THICK W/ VAPOR BARRIER |
| — — — | COLD WATER (CW) UNDERGROUND OR UNDERFLOOR |
| — HW — | HOT WATER (HW) INSULATED 1" THICK W/ VAPOR BARRIER |
| — HWR — | HOT WATER RETURN (HWR) INSULATED 1' THICK W/ VAPOR BARRIER |
| — GAS — | NATURAL GAS SCH 40 STEEL PIPING W/ LABEL PER CODE |
| P-# | FIXTURE NUMBER – SEE PLUMBING SCHEDULE |
| C.O. | CLEAN OUT |
| F.C.O. | FLOOR CLEAN-OUT W/ BRASS COVER |
| W.C.O. | WALL CLEAN-OUT W/ CHROME COVER |
| V.T.R. | VENT THRU ROOF |
| U/G | UNDERGROUND INSTALLATION |
| U/F | UNDERFLOOR INSTALLATION |
| F.D. | FLOOR DRAIN W/ TRAP PRIMER VALVE & CONNECTION AS SPECIFIED |
| F.P.H.B. | FREEZE PROOF HOSE BIBB W/INTEGRAL VACUUM BREAKER |
| o—— | PIPE UP – INSULATED 1" THICK W/ VAPOR BARRIER |
| c—— | PIPE DOWN – INSULATED 1" THICK W/ VAPOR BARRIER |
| (S-#) | SANITARY RISER REFERENCE NUMBER |
| W.H.A. | WATER HAMMER ARRESTOR (SHOCK ABSORBER) JOSAM MFR MODEL 75000 SERIES OR EQUAL |

# HANDICAP ACCESSIBILITY NOTES:

WATER CLOSETS: 17"-19" A.F.F. TO RIM
18" FROM SIDEWALL TO CENTER (IN PLAN)

LAVATORIES 34" MAX. AF.F. TO TOP OF RIM
29" MIN. CLEAR A.F.F. @ APRON
17" MIN. PROJECTION
30" CLEAR CENTERED (IN PLAN)

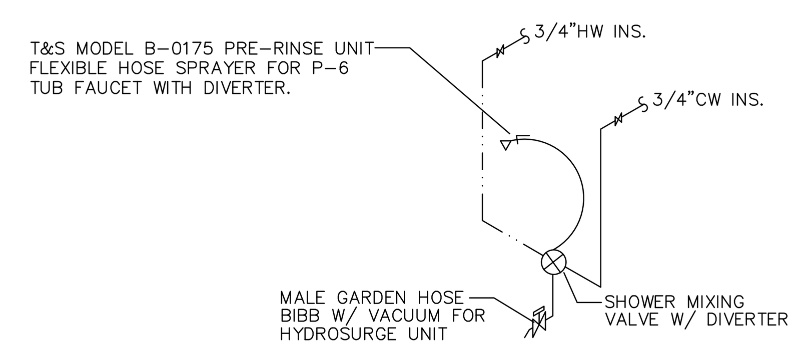

P-8 HYDROSURGE MIXING VALVE DIAGRAM
NOT TO SCALE

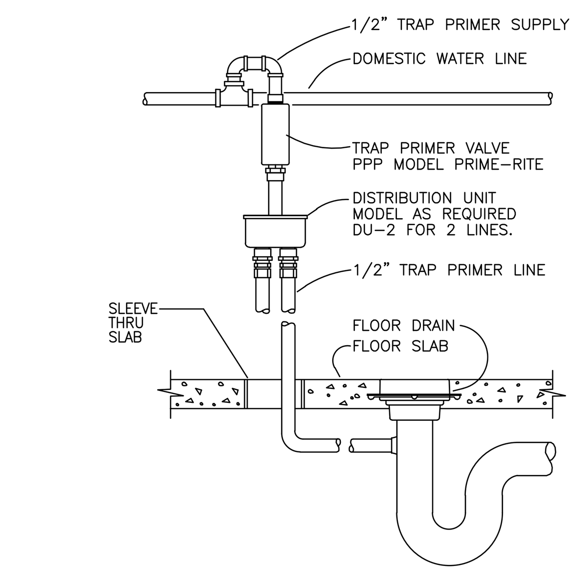

P-4/P-5 TRAP SEAL PRIMER DETAIL
NOT TO SCALE

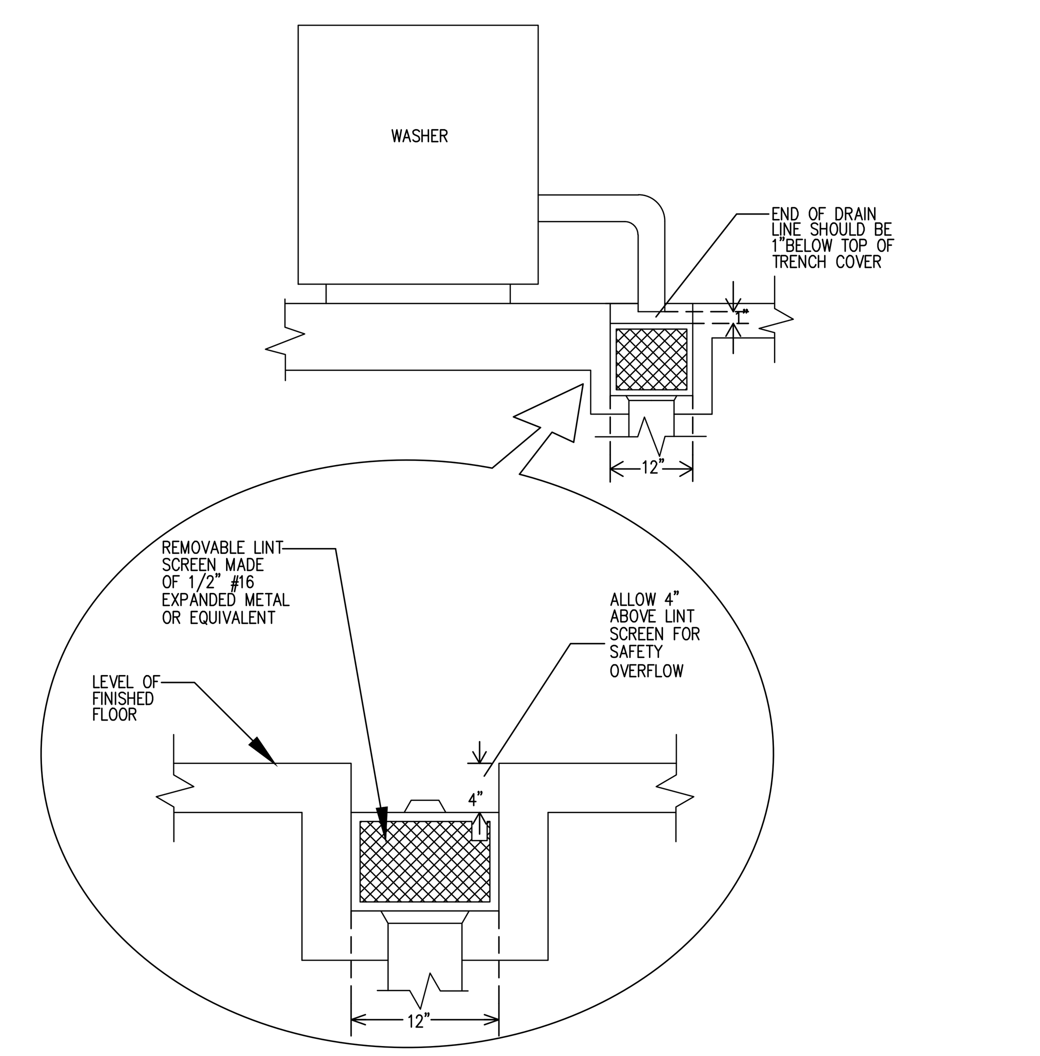

P-31 WASHER DRAIN TROUGH DETAIL
NOT TO SCALE

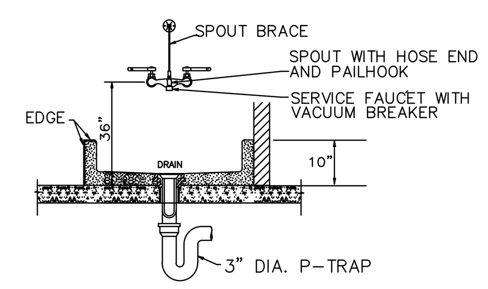

P-3 MOP SINK DETAIL
NOT TO SCALE

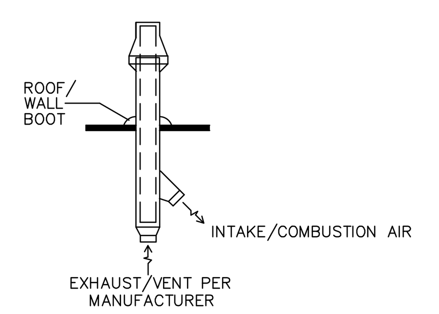

TYPICAL CONCENTRIC VENT FOR WATER HEATER
NOT TO SCALE

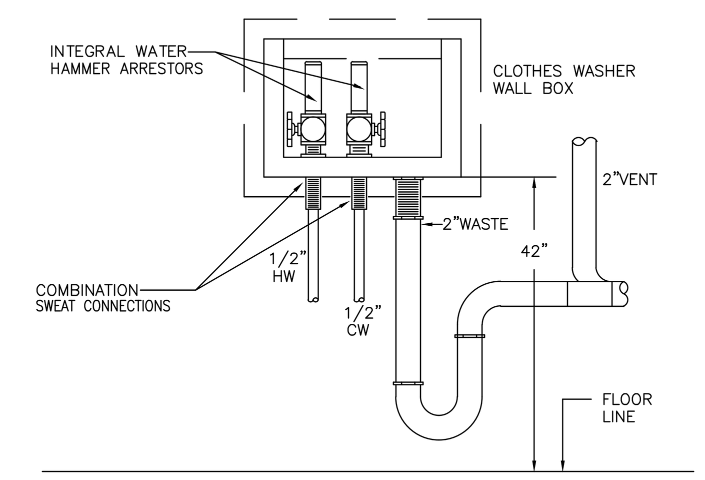

P-32 UTILITY WALL BOX FOR CLOTHES WASHER
NOT TO SCALE

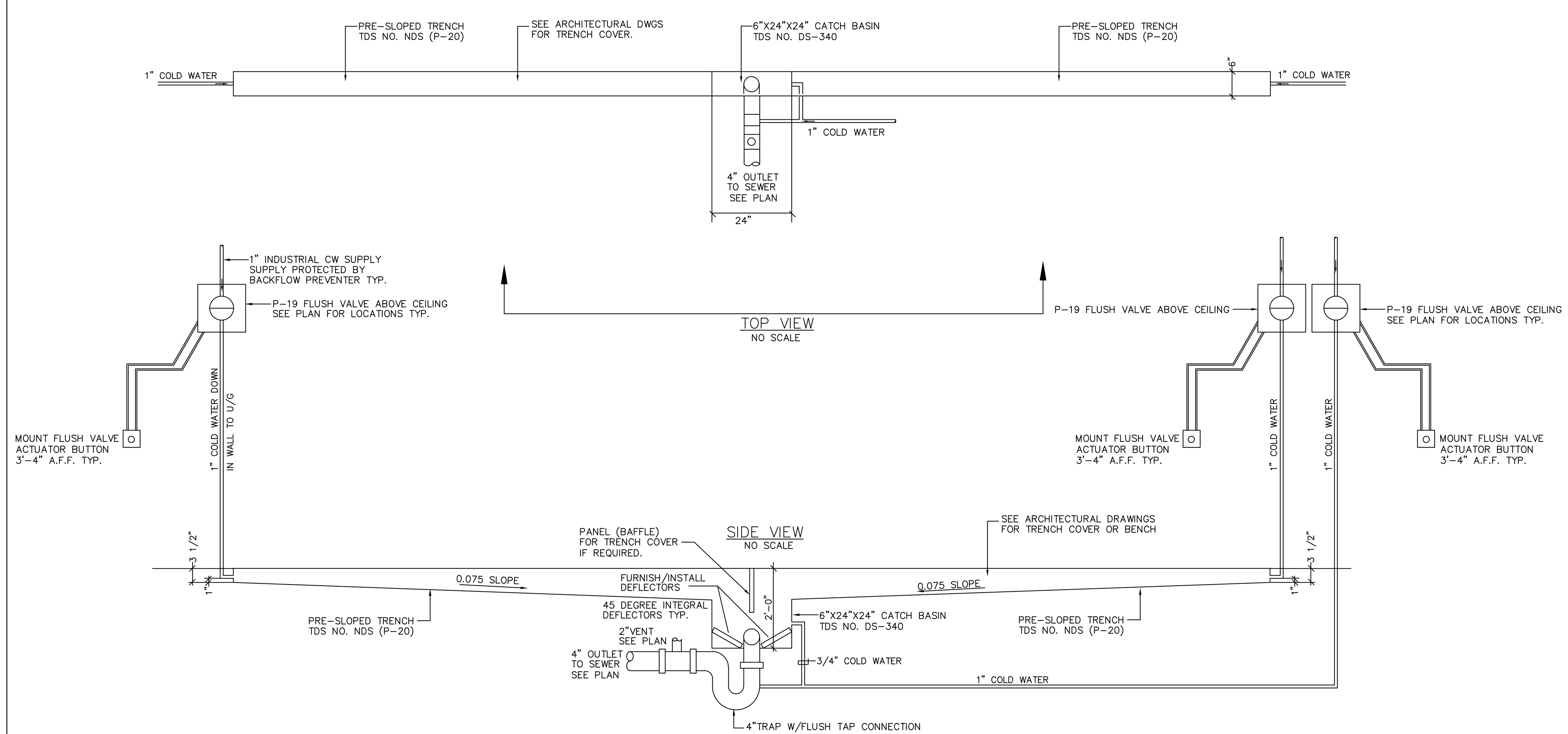

P-19 & P-20 TRENCH DRAIN WATER CONNECTION DETAIL
NOT TO SCALE

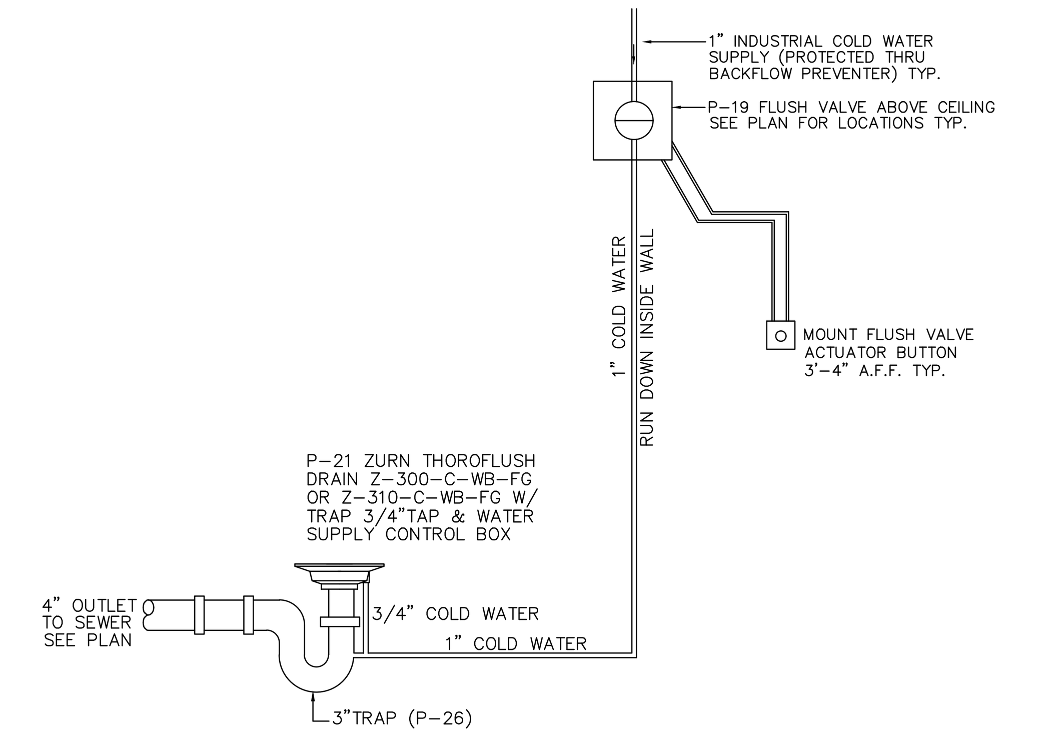

P-19 & P-21 FLUSHING RIM DRAIN WATER CONNECTION
NOT TO SCALE

| REVISION NO. | DESCRIPTION | DATE |
|---|---|---|
| 1 | ADDENDUM #1 | 11/11/21 |

ARCHITECTS SEAL:


rauhaus freedenfeld & associates
East Coast Office
97 Broadway
Boston, MA 02116
T: 617.338.0050
F: 617.426.2557
West Coast Office
23101 Moulton Pkwy #106
Laguna Hills, CA 92653
T: 949.716.8899
F: 949.716.9959


# CAPITAL PROJECT 1483
## CONSTRUCTION OF A NEW ANIMAL SHELTER FACILITY
## 65 FIREMENS MEMORIAL DRIVE, POMONA, NY 10970

| | |
|---|---|
| DRAWN BY: | CRS |
| CHECKED BY: | JLC |
| SCALE: | AS NOTED |
| DATE: | 20 OCT. 2021 |
| PROJECT NO: | 2019 |

PLUMBING SCHEDULES AND DETAILS

PROGRESS SET ☐ BID SET ■ PERMIT SET ☐ CONSTRUCTION SET ☐


© 2021 RAUHAUS FREEDENFELD & ASSOCIATES, LLP.



CDi
Comfort Design Inc.
Mechanical & Electrical Engineers
620 Pennsylvania Ave
Winchester, VA 22601
Phone 540-665-2846
Fax 540-667-3284

Job # E2119

P0.01

NOTES:

GENERAL

A. SEE MECHANICAL COVER SHEET – GENERAL PROJECT NOTES FOR ADDITIONAL REQUIREMENTS.

B. BEFORE COMMENCING ANY WORK, THE CONTRACTOR SHALL VERIFY ALL GOVERNING DIMENSIONS AT THE SITE AND EXAMINE ADJOINING WORK ON WHICH ITS WORK WILL BE DEPENDENT AND REPORT ANY CONFLICTS OR DISCREPANCIES TO THE ARCHITECT /ENGINEER.

C. PROVIDE ALL WORK INDICATED ON THE CONTRACT DOCUMENTS.

D. THE DRAWINGS SHALL BE CONSIDERED AS DIAGRAMMATIC. ATTENTION IS CALLED TO THE FACT THAT WHILE THE DRAWINGS ARE GENERALLY TO SCALE AND ARE AS ACCURATE AS THE SCALE WILL PERMIT, ALL IMPORTANT DIMENSIONS SHALL BE DETERMINED IN THE FIELD. THE DRAWINGS ARE NOT TO BE CONSIDERED AS CONSTRUCTION DRAWINGS. THE DRAWINGS DO NOT INDICATE EVERY FITTING, ELBOW, OFFSET, VALVE OR SIMILAR COMPONENTS WHICH ARE REQUIRED TO COMPLETE THE WORK.

E. THE CONTRACTOR SHALL INSTALL AND CONNECT ALL EQUIPMENT AND MATERIALS IN ACCORDANCE WITH THE BEST ENGINEERING PRACTICE AND UNLESS OTHERWISE INDICATED SHALL FOLLOW THE MANUFACTURER'S PUBLISHED INSTRUCTIONS AND RECOMMENDATIONS. FURNISH AND INSTALL ALL REQUIRED AUXILIARY ITEMS TO PROVIDE A COMPLETE & OPERABLE SYSTEM.

F. WITHIN THIRTY (30) DAYS OF CONTRACT AWARD, THE CONTRACTOR SHALL SUBMIT FOR REVIEW TO THE ARCHITECT ALL DEVICES TO BE USED IN THE WORK. SUBMITTALS SHALL INCLUDE PIPE, FITTINGS, HANGERS AND SUPPORTS, INSULATION, FIXTURES AND RELATED EQUIPMENT.

G. THE DRAWINGS SHALL NOT BE SCALED FOR EXACT MEASUREMENTS –– USE DIMENSIONED ARCHITECTURAL DRAWINGS. REFER TO MANUFACTURER'S STANDARD ROUGH–IN DRAWINGS FOR PLUMBING FIXTURES AND TO ARCHITECTURAL DRAWINGS FOR EXACT LOCATIONS.

H. COORDINATE WITH THE WORK OF OTHER SECTIONS AND TRADES, WITH EQUIPMENT FURNISHED BY OTHERS, AND WITHIN THE CONSTRAINTS OF THE EXISTING CONDITIONS OF THE PROJECT SITE.

I. MISCELLANEOUS EXPENSES SUCH AS HOOK –UP CHARGES, PERMITS, INSPECTIONS, AND OTHER EXPENSES RELATED TO A COMPLETE AND FUNCTIONING SYSTEM ARE INCLUDED AS PART OF THIS SECTION.

J. ACCESS PANELS SHALL BE PROVIDED IN CEILINGS OR WALLS WHERE CONCEALED DEVICES ARE LOCATED, EXCEPT WHERE ACCESS FOR ADJUSTMENT AND MAINTENANCE IS POSSIBLE THROUGH OTHER MEANS.

K. PIPING SYSTEMS, GENERAL: ALL PIPING SHALL BE RUN PARALLEL TO BUILDING LINES AND SUPPORTED AND ANCHORED AS REQUIRED TO FACILITATE EXPANSION AND CONTRACTION. ALL PIPING SHALL BE CONCEALED EXCEPT IN UNFINISHED SPACES. INSTALL AS REQUIRED TO MEET ALL CONSTRUCTION CONDITIONS AND TO ALLOW FOR INSTALLATION OF OTHER WORK INCLUDING DUCTS AND ELECTRICAL CONDUIT. AT ALL CONNECTIONS BETWEEN FERROUS PIPING AND NONFERROUS PIPING, PROVIDE AN ISOLATING DIELECTRIC UNION. SEAL PIPE PENETRATIONS OF FIRE FLOORS AND FIREWALLS WITH FIREPROOF PUTTY OR GROUT. PROVIDE SUMNER OR EQUIVALENT PIPE HANGING SYSTEM IN CHASES. PROVIDE HANGERS AS RECOMMENDED BY HANGER MANUFACTURER.

L. ALL SINK INSTALLATION WILL BE EQUIPPED WITH HOT AND COLD RUNNING WATER THROUGH A MIXING VALVE OR COMBINATION FAUCET. ALL HANDICAP (ADA) SINK INSTALLATION SHALL BE EQUIPPED WITH ASSE 1070 TEMPERING VALVE ON THE HOT WATER. SET LIMIT AT 109F.

M. (IF APPLICABLE) ALL WASTEWATER FROM FOOD SERVICE EQUIPMENT WILL BE INDIVIDUALLY PLUMBED TO AN OPEN SITE DRAIN WITH A MIN. OF 1" AIR GAP.

N. WHERE PIPING PENETRATES FIRE–RATED WALLS, PIPING SHALL BE INSTALLED AT 90 DEGREE ANGLE. PIPE SLEEVES SHALL NOT BE INSTALLED AT 45 DEGREE ANGLE.

O. ALL FIXTURES SHALL BE PROPERLY VENTED TO THE ATMOSPHERE.

P. WATER AND VENT PIPING SHALL BE RUN HIGH AS POSSIBLE UNLESS OTHERWISE NOTED.

Q. THE WORK INCLUDES CONNECTION OF PLUMBING UTILITIES TO PUBLIC UTILITIES AND INSTALLATION OF A COMPLETE PLUMBING SYSTEM WITHIN THE BUILDING. PROVIDE NEW MATERIALS, FITTINGS, ACCESSORIES, FIXTURES AND EQUIPMENT NECESSARY FOR A COMPLETE AND PROPERLY FUNCTIONING SYSTEM AS SHOWN ON THE PLANS AND AS REQUIRED. THE WORK INCLUDES FINAL CONNECTIONS TO EQUIPMENT AND FIXTURES PROVIDED BY OTHERS. FURNISH ALL NEW MATERIALS. WORK SHALL BE PERFORMED BY EXPERIENCED TRADESMEN, AND THEIR WORKMANSHIP SHALL BE HIGH STANDARD & ACCEPTABLE TO THE ARCHITECT, GENERAL CONTRACTOR, AND OWNER.

R. ALL PLUMBING VENTS IN EXTERIOR WALLS SHALL BE OFFSET A MINIMUM OF 3' –0" IN CEILING AT ROOF BEFORE PENETRATION.

S. ALL PLUMBING VENTS WITHIN A 10'–0" RADIUS OF EXHAUST VENTS SHALL BE EXTENDED TO A HEIGHT OF 3' –0" ABOVE EXHAUST VENT CROWN.

T. ALL PLUMBING VENTS WITHIN A 10' –0" RADIUS OF ANY ROOFTOP UNIT OR INTAKE LOUVER SHALL BE EXTENDED TO A HEIGHT OF 3'–0" ABOVE FRESH AIR INTAKE.

U. ALL HOSE BIBS SHALL BE MOUNTED 18" ABOVE FINISHED FLOOR, UNLESS OTHERWISE SPECIFIED.

V. ALL WALL HYDRANTS SHALL BE MOUNTED 24" ABOVE FINISHED GRADE UNLESS OTHERWISE SPECIFIED.

W. SLOPES AND INVERT ELEVATIONS OF ALL INTERIOR PIPING SHALL BE ESTABLISHED BEFORE ANY PIPING IS INSTALLED IN ORDER THAT PIPE SHALL BE LOCATED AND DETERMINED WHERE TO BE RUN TO AVOID CONFLICT WITH OTHER TRADES.

X. CLEANOUTS SHALL BE PROVIDED NEAR BASE OF EACH VERTICAL WASTE OR SOLID STACK. PROVIDE 18" MINIMUM CLEARANCE FOR ACCESS.

Y. UNLESS OTHERWISE NOTED, HORIZONTAL SANITARY PIPING SHALL BE PITCHED PER A.1.a.

Z. LABEL ALL NEW PIPING. LABEL TO DESCRIBE SERVICE AND DIRECTION OF FLOW.

AA. FLOOR SLABS SHALL BE X–RAYED BEFORE ANY CORE DRILLING IS COMMENCED.

AB. ALL BUILDING SYSTEMS SHALL REMAIN IN SERVICE UNLESS INDICATED OTHERWISE. ALL OUTAGES OR INTERRUPTIONS SHALL BE KEPT TO MINIMUM DURATION. NOTIFY THE OWNER 48 HOURS IN ADVANCE OF ANY OUTAGE OR INTERRUPTION.

AC. THE CONTRACTOR SHALL REPAIR ALL WALL, CEILING, FLOOR, OR ROOF OPENINGS WHICH ARE CREATED BY DEMOLITION OR PENETRATION. THE REPAIRS SHALL BE WITH MATERIALS AND FINISHES TO MATCH EXISTING. ALL FIRE RATED PENETRATIONS SHALL BE SEALED WITH SUITABLE MATERIALS TO PRESERVE FIRE RATED INTEGRITY.

AD. ALL EQUIPMENT INSTALLED SHALL BE NEW AND SHALL CONFORM IN ALL RESPECTS TO THE LATEST APPROVED STANDARDS OF IEEE, ANSI, NEMA AND UNDERWRITERS LABORATORIES, INC., UNLESS INDICATED OTHERWISE. SUBSTITUTIONS SHALL ONLY BE ACCOMPLISHED AT THE DISCRETION OF THE ENGINEER.

AE. PROTECT ADJACENT MATERIALS INDICATED TO REMAIN. INSTALL AND MAINTAIN DUST AND NOISE BARRIERS TO KEEP DIRT, DUST, AND NOISE FROM BEING TRANSMITTED TO ADJACENT AREAS. REMOVE PROTECTION AND BARRIERS AFTER DEMOLITION OPERATIONS ARE COMPLETE.

AF. THE WORK SHALL CONFORM TO THE LATEST STATE AND LOCAL PLUMBING CODES.

PRODUCTS:

A. PIPING AND FITTINGS:

1. WASTE PIPING:

a. SHALL BE TYPE PVC OR CAST IRON. FITTINGS SHALL BE TYPE PVC OR CAST IRON. ABS CAN BE USED IF SHELL BUILDING SEWER & VENT PIPES ARE ABS. MUST BE APPROVED BY LOCAL CODES. PROVIDE ALL DRAIN, WASTE AND SEWER PIPING WITHIN THE PROJECT SPACE WITH CONNECTION TO THE PUBLIC SANITARY WASTE SYSTEM ON SITE. ALL PIPING BELOW FLOOR SLAB SHALL BE PVC OR SERVICE WEIGHT HUB AND SPIGOT PIPE AND FITTINGS WITH NEOPRENE GASKET JOINTS, OR HUBLESS PIPE WITH CAST IRON COUPLINGS AND STAINLESS STEEL BOLTS COATED WITH MASTIC. ALL WASTE PIPING ABOVE FLOOR SHALL BE PVC OR SERVICE WEIGHT COPPER HUBLESS PIPE, CONNECTORS AND FITTINGS. ALL PIPING SHALL BE SLOPED UNIFORMLY AT 1.04% (3" AND ABOVE) OR 2.08% (2" AND BELOW) UNLESS OTHERWISE REQUIRED BY EXISTING CONDITIONS. ALL INDOOR ABOVE GRADE SANITARY PIPING SHALL BE CAST IRON OR PVC INSULATED FOR SOUND.

b. HUB–AND–SPIGOT, CAST –IRON SOIL PIPE AND FITTINGS
- b.a.a. Pipe and Fittings: ASTM A 74,[Service] class.
- b.a.b. Gaskets: ASTM C 564, rubber.
- b.a.c. Caulking Materials: ASTM B 29, pure lead and oakum or hemp fiber.

c. HUBLESS, CAST –IRON SOIL PIPE AND FITTINGS
- c.a.a. Pipe and Fittings: ASTM A 888 or CISPI 301.
- c.a.a.1. Standards: ASTM C 1277 and CISPI 310.
- c.a.a.2. Description: Stainless–steel corrugated shield with stainless–steel bands and tightening devices; and ASTM C 564, rubber sleeve with integral, center pipe stop.
- c.a.a.3. Description: Stainless–steel shield with stainless–steel bands and tightening devices; and ASTM C564, rubber sleeve with integral, center pipe stop.

d. COPPER TUBE AND FITTING
- d.a. Copper DWV Tube: ASTM B 306, drainage tube, drown temper.
- d.b. Copper Drainage Fittings: ASME B16.23, cast copper or ASME B16.29, wrought copper, solder–joint fittings.
- d.c. Copper Ranges: ASME B16.24, Class 150, cast copper with solder–joint end.
- d.d. Solder. ASTM B 32, lead free with ASTM B 813, water–flushable flux.

2. INDIRECT WASTE PIPING (IF APPLICABLE):

a. HARD DRAWN COPPER TUBE TYPE "M".

3. VENT PIPING:

a. PROVIDE A COMPLETE SYSTEM OF VENT PIPING, CONSISTING OF SERVICE WEIGHT CAST IRON HUBLESS PIPE, CONNECTORS AND FITTINGS. COMBINE THE VENT RISERS IN THE CEILING SPACE AND CONNECT TO NEW VENT MAIN.

4. WATER PIPING:

a. PROVIDE NEW DOMESTIC WATER PIPING SYSTEM INSIDE THE BUILDING AS SHOWN ON DRAWINGS. HOT AND COLD WATER PIPING SHALL BE COPPER TUBING & FITTINGS OR CCPVC PIPING & FITTINGS. PROVIDE WATER HAMMER ARRESTORS AS REQUIRED. LAY OUT WATER PIPING SO THAT ENTIRE SYSTEM CAN BE DRAINED. FLUSH THE WATER PIPING CLEAR OF DEBRIS AND CLEAN THE AERATORS AND STRAINERS AT THE TERMINATION OF THE INSTALLATION.

b. COPPER TUBE AND FITTINGS
- b.a. Hard Copper Tube: ASTM B 88, Type L and ASTM B 88, Type M water tube, drawn temper.
- b.b. Soft Copper Tube: ASTM B 88, Type K and ASTM B 88, Type L water tube, annealed temper.
- b.c. Cast–Copper, Solder–Joint Fittings: ASME B16.18, pressure fittings.
- b.d. Wrought–Copper, Solder–Joint Fittings: ASME B16.22, wrought–copper pressure fittings.
- b.e. Bronze Flanges: ASME B16.24, Class 150, with solder–joint ends.
- b.f. Copper Unions:
- b.f.1. MSS SP–123.
- b.f.2. Cast–copper–alloy, hexagonal–stock body.
- b.f.3. Ball–and–socket, motel–to–motel seating surfaces.
- b.f.4. Solder–joint or threaded ends.
- b.f.5. Copper Pressure–Seal–Joint Fittings:
- b.f.6. Fittings for NPS 2 and Smaller. Wrought–copper fitting with EPDM–rubber, O–ring seal in each end.
- b.1. 7. Fittings for NPS 2–1/2 to NPS 4: Cast–bronze or wrought–copper fitting with EPDM–rubber, D–ring seal in each end.

5. PIPE INSULATION:

INSULATE ALL COLD WATER AND CONDENSATE PIPING WITH 1/2", AND HOT WATER PIPING WITH 1", PREFORMED FIBERGLASS PER ASTM C335 WITH ALL –SERVICE JACKET AND VAPOR BARRIER (BY CT, OC, JM, PPG, OR KNAUF). INSULATION SHALL COMPLY WITH NFPA 255 AND ASTM EB4 WITH A MAXIMUM FLAME SPREAD OF 25 AND MAXIMUM SMOKE DEVELOPED OF 50. PROVIDE PRE– MOLDED FITTING COVERS EQUAL TO STARR DAVIS. AT CONTRACTOR'S OPTION, PLENUM–RATED ELASTOMERIC INSULATION (BY ARMSTRONG, RUBATEX OR EQUAL) MAY BE USED.

6. SHUT –OFF VALVES:

VALVES WITH UNIONS SHALL BE PROVIDED AT BRANCHES TO GROUPS OF MORE THAN TWO FIXTURES AND AT THE WATER HEATER TO FACILITATE ISOLATION FOR REPAIR OR REPLACEMENT. USE CHROME–FINISHED FORGED BRONZE BODY, FULL PORT BALL VALVES, LEAD FREE, PTFE SEATS AND PACKING, 400 LB. RATING WITH THREADED OR SOLDER ENDS, EQUAL TO NIBCO #FP600. VALVES SHALL BE ALL BRONZE FABRICATED VALVES FOR SCREWED PIPE. BY WALWORTH, ROCKWELL, NORDSTROM OR APPROVED EQUIVALENT.

7. AIR ADMITTANCE VALVE (A.A.V.) (IF REQUIRED):

STUDER MINIVENT, MAXIVENT, REDIVENT, TECVENT AND ULTRAVENT.

8. FLOOR DRAINS, CLEAN OUTS, TRAP SEALERS, HOSE BIBS AND BACKFLOW PREVENTERS:

SEE SCHEDULE ON PLUMBING DRAWINGS.

9. SUPPLIES AND TRAPS:

PROVIDE WATER SEALED TRAPS AND SUPPLIES INSTALLED AS CLOSE AS POSSIBLE TO ALL PLUMBING FIXTURES, DRAINS, AND/OR EQUIPMENT ITEMS FURNISHED BY OTHERS, HAVING A WASTE CONNECTION, OR REQUIRING WATER SERVICE. EXPOSED TRAPS AND SUPPLIES IN EXPOSED AREAS INCLUDING CABINET INTERIORS) SHALL BE CHROME PLATED BRASS.

10. DIELECTRIC FITTINGS:

SHALL BE EQUAL TO EPCO SALES, INC.

EXECUTION

A. PROVIDE ALL WORK, EQUIPMENT, AND MATERIALS INDICATED.
B. ALL PIPE SHALL BE INSTALLED ABOVE CEILINGS, INSIDE WALLS OR IN CONCEALED SPACES.
C. DISINFECTION OF POTABLE WATER SHALL BE PERFORMED IN ACCORDANCE WITH THE LOCAL AUTHORITY HAVING JURISDICTION. THOROUGHLY CLEAN ITEMS BEFORE INSTALLATION. CAP PIPE OPENINGS TO EXCLUDE DIRT UNTIL FIXTURES ARE INSTALLED AND FINAL CONNECTIONS HAVE BEEN MADE. PROCEED AS RAPIDLY AS CONSTRUCTION WILL PERMIT. SET FIXTURES LEVEL AND IN PROPER ALIGNMENT. INSTALL SUPPLIES IN PROPER ALIGNMENT WITH FIXTURES PER MANUFACTURER'S ROUGH–IN DIMENSIONS. INSTALL SILICONE SEALANT BETWEEN FIXTURES AND ADJACENT MATERIAL, FOR SANITARY JOINT. REPAIR ANY DAMAGE DONE TO EXISTING FEATURES AND RESTORE TO ORIGINAL CONDITIONS. PROVIDE CLEAN CONDITIONS AT TERMINATION OF WORK.
D. TEST WASTE AND WATER UNDER ACTUAL OPERATING CONDITIONS. REPAIR LEAKS AND RETURN TO SERVICE. TEST WASTE PIPING AT 15 FEET OF HEAD FOR 24 HOURS. TEST WATER PIPING AT 125 PSI FOR 2 HOURS. MAKE REPAIRS WITH NEW MATERIALS. REPLACE LEAKING MATERIALS, DO NOT REPAIR BY PATCHING. REPEAT TEST UNTIL STANDARDS ARE ACHIEVED.
E. PROVIDE DOMESTIC WATER BACKFLOW PREVENTERS AT ALL COFFEE MAKERS, ICE MAKERS, DISHWASHERS, WATER COOLERS, AIR CONDITIONING UNIT HUMIDIFIERS AND OR ANY OTHER DEVICE REQUIRED BY THE LOCAL AUTHORITY HAVING JURISDICTION. BACK FLOW PREVENTERS SHALL BE APPROVED BY THE LOCAL AUTHORITY HAVING JURISDICTION.
F. INSULATE ALL DOMESTIC HOT AND COLD WATER PIPING.
G. PROVIDE DIELECTRIC COUPLINGS AT ALL FERROUS TO NONFERROUS PIPE CONNECTIONS AND FLANGE UNION ISOLATING JOINTS TO PREVENT ANY ELECTROLYTIC ACTION BETWEEN DISSIMILAR METALS.
H. ALL SAW CUT OF FLOOR SHALL BE PATCHED BACK TO MATCH EXISTING FINISHES. BACKFILL PER SOILS ENGINEER'S RECOMMENDATIONS. SEAL WITH WATERPROOF MEMBRANE ALL SLAB PENETRATIONS 6" OUT FROM AND 6" UP THE DEMISING WALL
I. GUARANTEE THE WORK AND THE INSTALLATION FOR ONE YEAR AFTER FORMAL ACCEPTANCE BY THE OWNER.
J. ALL PIPES SHALL BE HUNG FROM BUILDING STRUCTURE WITH INSERTS EMBEDDED NO MORE THAN 2".

PLUMBING GENERAL NOTES

1. THE CONTRACTOR SHALL COMPLY WITH THE BUILDING, MECHANICAL, AND PLUMBING CODES OF THE STATE OF NEW YORK, AND ALL THE LAWS, ORDINANCES, RULES, CODES AND REGULATIONS OF ALL GOVERNMENTAL AUTHORITIES HAVING JURISDICTION AND THE NATIONAL FIRE PROTECTION ASSOCIATION.
2. THE CONTRACTOR SHALL BE RESPONSIBLE FOR VISITING THE SITE AND DETERMINING THE EXISTING CONDITIONS IN WHICH THE WORK IS TO BE PERFORMED. PROVIDE ALL WORK INDICATED ON THE CONTRACT DOCUMENTS.
3. THE CONTRACTOR SHALL REMOVE AND DISCONNECT ALL EQUIPMENT AND MATERIALS IN ACCORDANCE WITH THE BEST ENGINEERING PRACTICE AND UNLESS OTHERWISE INDICATED.
4. UPON COMPLETION OF THE WORK, THE CONTRACTOR SHALL THOROUGHLY CLEAN THE CONTRACT AREA AND ALL OTHER AREAS USED FOR STORAGE, STAGING, ETC. THIS SHALL INCLUDE. BUT NOT BE LIMITED TO: WASHING (AND REPAIRING), REMOVING SPOTS AND STAINS, CLEANING ALL FIXTURES AND WASHING ALL FLOORS, WALLS AND CEILINGS (IF APPROPRIATE).
5. REFER TO MECHANICAL SHEETS FOR LOCATIONS OF MECHANICAL EQUIPMENT AND DUCTWORK AND COORDINATE ALL WORK TO BE REMOVED.
6. THE CONTRACTOR SHALL PROVIDE NECESSARY PIPING, VALVES, TRAPS, TEMPORARY FEEDS, DRIPS, ETC. AS REQUIRED. DRAIN AND REFILL PIPING SYSTEMS AS OFTEN AS NECESSARY TO ACCOMMODATE PHASING AND TO MINIMIZE TIME LENGTH OF OUTAGES.
7. WHERE REQUIRED TO MAINTAIN THE EXISTING SYSTEMS IN OPERATION, THE CONTRACTOR SHALL TEMPORARILY BACKFEED EXISTING SYSTEMS FROM NEW EQUIPMENT. CONTRACTOR SHALL TEMPORARILY EXTEND EXISTING PIPING SYSTEMS TO NEW PIPING SYSTEMS WITH THE APPROPRIATE SHUT –OFF VALVES.
8. AT COMPLETION OF PROJECT ALL TEMPORARY PIPING, VALVES, CONTROLS, ETC. SHALL BE REMOVED IN THEIR ENTIRETY.

CDi
Comfort Design Inc.
Mechanical & Electrical Engineers
620 Pennsylvania Ave
Winchester, VA 22601
Phone 540-665-2846
Fax 540-667-3284
Job # E2119

| NO. | REVISION DESCRIPTION | DATE |
|---|---|---|
| 1 | ADDENDUM #1 | 11/11/21 |

ARCHITECTS SEAL

East Coast Office
97 Brooklyn
Boston, MA 02116
T: 617.338.0050
F: 617.426.2057

West Coast Office
23101 Moulton Pkwy #106
Laguna Hills, CA 92653
T: 949.716.8899
F: 949.716.9909

rauhaus freedenfeld & associates

# CAPITAL PROJECT 1483
## CONSTRUCTION OF A NEW ANIMAL SHELTER FACILITY
## 65 FIREMENS MEMORIAL DRIVE, POMONA, NY 10970

DRAWN BY: CRS
CHECKED BY: JLC
SCALE: AS NOTED
DATE: 20 OCT. 2021
PROJECT NO. 2019

PROGRESS SET ☐ BID SET ■ PERMIT SET ☐ CONSTRUCTION SET ☐

PLUMBING NOTES

P0.02

© 2021 RAUHAUS FREEDENFELD & ASSOCIATES, LLP.

## SMT - Surface Mount Remote

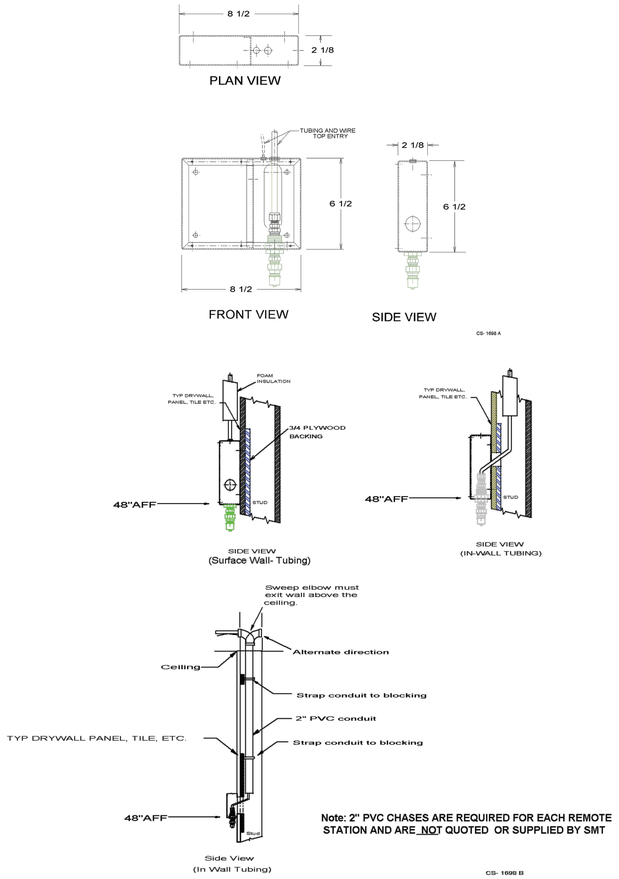


**Note: 2" PVC CHASES ARE REQUIRED FOR EACH REMOTE STATION AND ARE NOT QUOTED OR SUPPLIED BY SMT**

P–29 INTERIOR HIGH PRESSURE WASHER REMOTE STATION ROUGH–IN DETAIL #1
NOT TO SCALE

## SMT - Surface Mount Remote

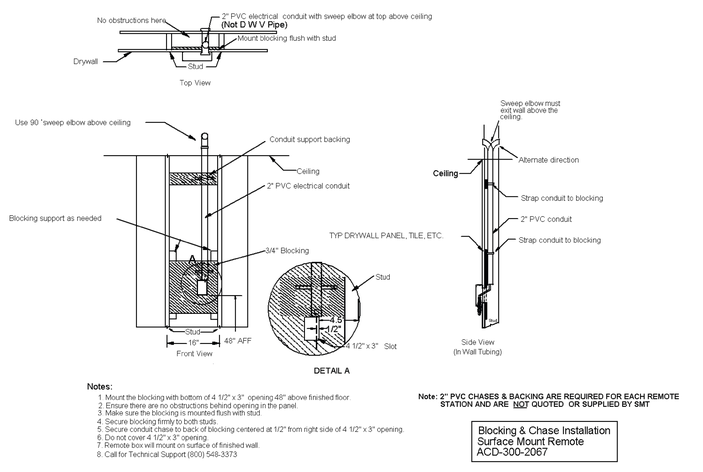


**Notes:**

1. Mount the blocking with bottom of 4 1/2" x 3" opening 48" above finished floor.
2. Ensure there are no obstructions behind opening in the panel.
3. Make sure the blocking is mounted flush with stud.
4. Secure blocking firmly to both studs.
5. Secure conduit chase to back of blocking centered at 1/2" from right side of 4 1/2" x 3" opening.
6. Do not cover 4 1/2" x 3" opening.
7. Remote box will mount on surface of finished wall.
8. Call for Technical Support (800) 548-3373.

**Note: 2" PVC CHASES & BACKING ARE REQUIRED FOR EACH REMOTE STATION AND ARE NOT QUOTED OR SUPPLIED BY SMT**

Blocking & Chase Installation
Surface Mount Remote
ACD-300-2067

P–29 INTERIOR HIGH PRESSURE WASHER REMOTE STATION ROUGH–IN DETAIL #2
NOT TO SCALE

## SMT - Non-Masonry Remote

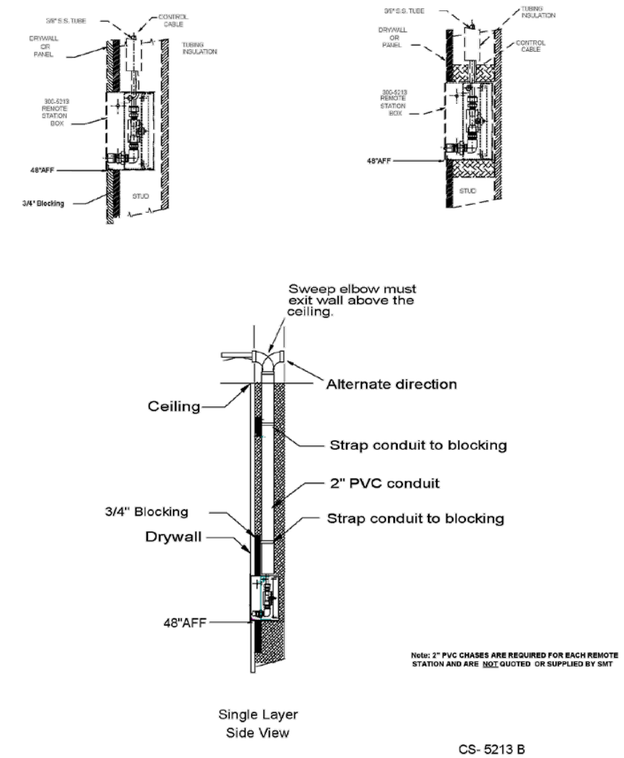


**Note: 2" PVC CHASES ARE REQUIRED FOR EACH REMOTE STATION AND ARE NOT QUOTED OR SUPPLIED BY SMT**

P–29 EXTERIOR HIGH PRESSURE WASHER REMOTE STATION ROUGH–IN DETAIL #1
NOT TO SCALE

## SMT - Surface Mount Remote

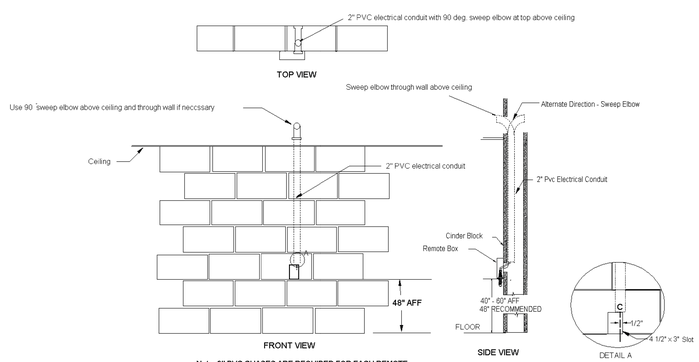


**Note: 2" PVC CHASES ARE REQUIRED FOR EACH REMOTE STATION AND ARE NOT QUOTED OR SUPPLIED BY SMT**

NOTES:

1.-Cut or block bottom of 4 1/2" x 3" opening 48" above finished floor
2.-Ensure there are no obstructions
3.-Secure conduit chase in wall centered at 1/2" from right side of 4 1/2" x 3" opening at front inside of Masonary Block
4.-Do not cover 4 1/2" x 3" opening
5.-Remote box will mount on surface of finished wall.
6.-Call for Technical Support (800) 548-3373
7.-Special Provision required for furred out masonary wall.

CHASE INSTALLATION
MASONARY WALL
SURFACE REMOTE
300-2070

P–29 INTERIOR HIGH PRESSURE WASHER REMOTE STATION ROUGH–IN DETAIL #3
NOT TO SCALE

## SMT - Universal Sleeve

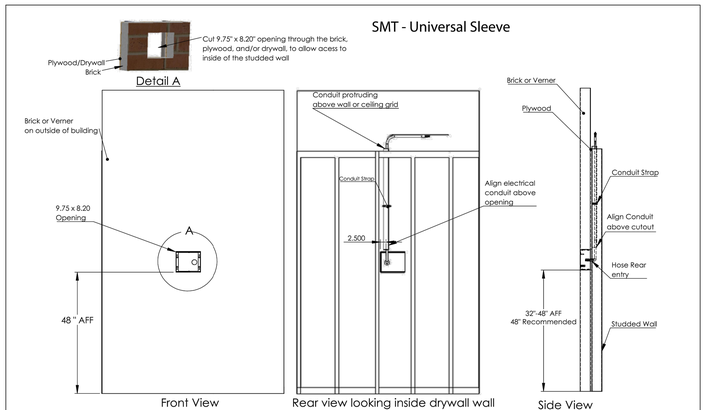


**Note: 2" Electrical conduit chases are required for each sleeve and are not quoted or supplied by SMT.**

Instructions for Brick or Verner walls:
1.-Cut or block bottom of 9.75" x 8.20" opening 48" above finished floor.
2.-Remove the black foam from the back side of sleeve covering hole.
3.-Ensure the depth of the opening is 4.25" Minimum. Cut opening between the outside brick and studded wall on the inside of building.
4.-Block or mount sleeve in opening and ensure the sleeve is level and flush with front of the brick or stone verner wall.
5.-Align a 2" rigid non metallic conduit chase above the opening inside the drywall centered 2.50 inches from the right of the opening. Route the conduit chase up through the top of the studded wall above the ceiling grid . Secure the conduit so it will not move or become misaligned.
6-Call for Technical Support (800)548-3373 Ext 6487.

Remote Sleeve Instruction in Brick or Stone Verner Sheet Rear Entry

P–29 EXTERIOR HIGH PRESSURE WASHER REMOTE STATION ROUGH–IN DETAIL #2
NOT TO SCALE

## SMT - Universal Sleeve

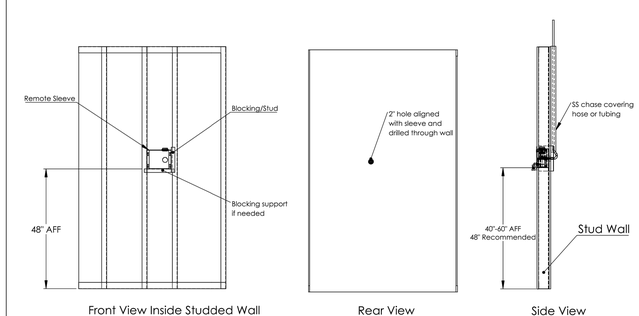


Instructions for studded walls:
1.-Remove the remote sleeve instruction sheet cover.
2.-Remove the black foam from the back and inside of the sleeve. Remove the two grippers if needed.
3.-Mount the bottom of the remote sleeve at 48" above finished floor.
4.-Place blocking or stud on the right hand side of the sleeve.
5.-Ensure sleeve is level and mounted flush with front of the studs. Secure sleeve to the studs or blocking on both sides using screws on the inside of sleeve through the slotted holes.
6.-Place a blocking on the lower side of sleeve for additional support if needed.
7.-Drill 2" hole aligned with hole on the back side of the studded for installation of tubing or hose at later time.
8. Call for Technical Support (800)548-3373 Ext 6487.

Remote Sleeve installed in studded wall with drywall rear entry.

P–29 EXTERIOR HIGH PRESSURE WASHER REMOTE STATION ROUGH–IN DETAIL #3
NOT TO SCALE


CDi
Comfort Design Inc.
Mechanical & Electrical Engineers
620 Pennsylvania Ave
Winchester, VA 22601
Phone 540-665-2846
Fax 540-667-3284
Job # E2119


| REVISION | | |
|---|---|---|
| NO. | DESCRIPTION | DATE |
| 1 | ADDENDUM #1 | 11/11/21 |

ARCHITECT'S SEAL


East Coast Office
97 Brooklyn
Brooklyn, NY 11216
T: 617.338.0050
F: 617.428.2357

West Coast Office
23101 Moulton Pkwy #106
Laguna Hills, CA 92653
T: 949.716.8899
F: 949.716.9909

rf&a
rauhaus freedenfeld & associates


# CAPITAL PROJECT 1483
## CONSTRUCTION OF A NEW ANIMAL SHELTER FACILITY
## 65 FIREMENS MEMORIAL DRIVE, POMONA, NY 10970

DRAWN BY: CRS
CHECKED BY: JLC
SCALE: AS NOTED
DATE: 20 OCT. 2021
PROJECT NO. 2019

PROGRESS SET ☐ BID SET ■ PERMIT SET ☐ CONSTRUCTION SET ☐

SMT ROUGH-IN DETAILS

© 2021 RAUHAUS FREEDENFELD & ASSOCIATES, LLP.

**P0.03**

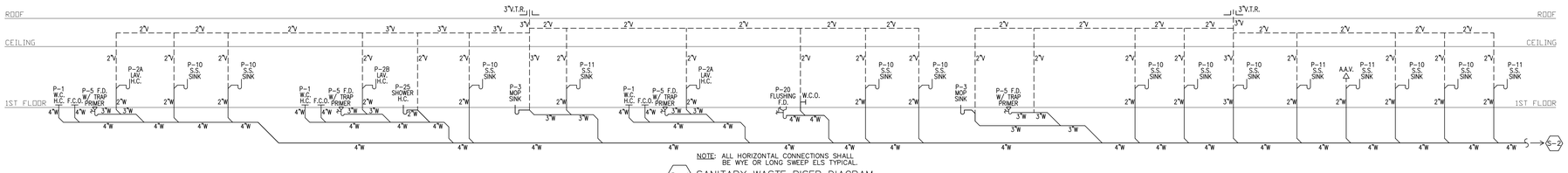


NOTE: ALL HORIZONTAL CONNECTIONS SHALL BE WYE OR LONG SWEEP ELS TYPICAL.

S-1 SANITARY WASTE RISER DIAGRAM
NOT TO SCALE

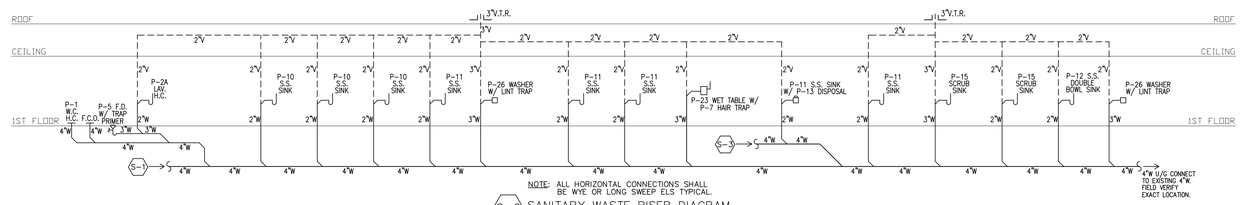


NOTE: ALL HORIZONTAL CONNECTIONS SHALL BE WYE OR LONG SWEEP ELS TYPICAL.

S-2 SANITARY WASTE RISER DIAGRAM
NOT TO SCALE

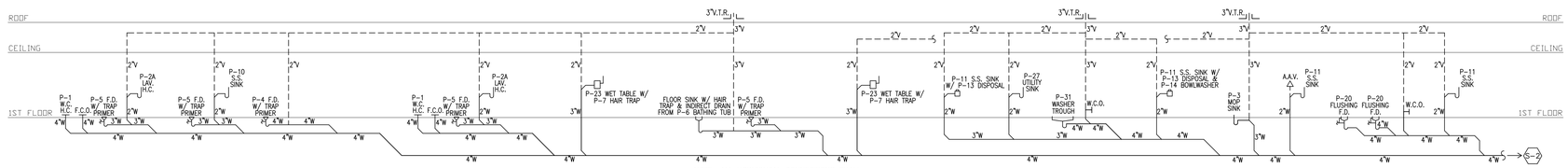


NOTE: ALL HORIZONTAL CONNECTIONS SHALL BE WYE OR LONG SWEEP ELS TYPICAL.

S-3 SANITARY WASTE RISER DIAGRAM
NOT TO SCALE

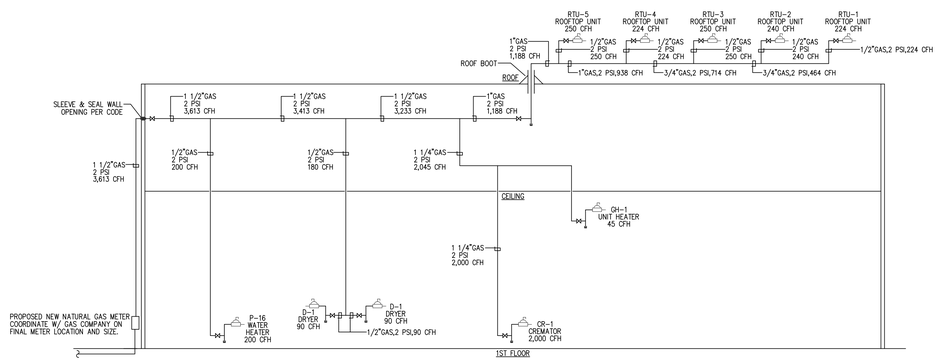


NATURAL GAS RISER DIAGRAM
NOT TO SCALE

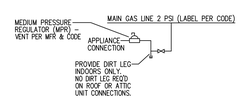


TYPICAL GAS CONNECTION DETAIL
NOT TO SCALE

| REVISION | | |
|---|---|---|
| NO. | DESCRIPTION | DATE |
| 1 | ADDENDUM #1 | 11/11/21 |

ARCHITECT'S SEAL:


East Coast Office
97 Blackstone
Bristol, RI 02809
T: 617.338.0050
F: 617.428.2357

West Coast Office
23101 Moulton Pkwy #106
Laguna Hills, CA 92653
T: 949.716.8899
F: 949.716.9909

rf&a
rauhaus freedenfeld & associates


# CAPITAL PROJECT 1483

CONSTRUCTION OF A NEW ANIMAL SHELTER FACILITY
65 FIREMENS MEMORIAL DRIVE, POMONA, NY 10970

| | |
|---|---|
| DRAWN BY: | CRS |
| CHECKED BY: | JLC |
| SCALE: | AS NOTED |
| DATE: | 20 OCT. 2021 |
| PROJECT NO. | 2019 |

SANITARY WASTE & NATURAL GAS RISER DIAGRAMS

PROGRESS SET ☐ BID SET ■ PERMIT SET ☐ CONSTRUCTION SET ☐

© 2021 RAUHAUS FREEDENFELD & ASSOCIATES, LLP


CDi
620 Pennsylvania Ave
Winchester, VA 22601
Phone 540-665-2846
Fax 540-667-3284

Comfort Design Inc.
Mechanical & Electrical Engineers

Job # E2119


P0.04

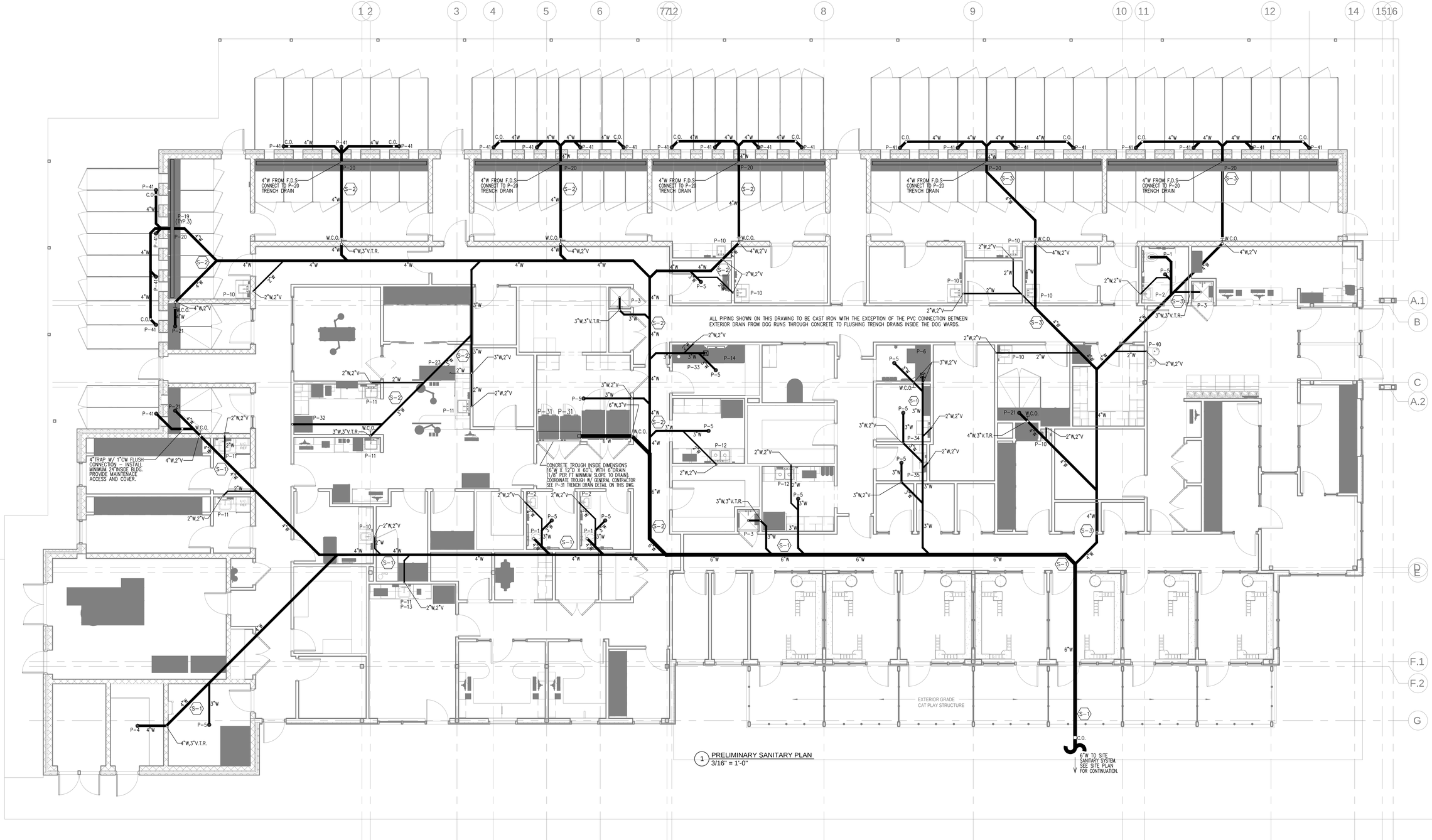


1 PRELIMINARY SANITARY PLAN
3/16" = 1'-0"

| NO. | REVISION DESCRIPTION | DATE |
|---|---|---|
| 1 | ADDENDUM #1 | 11/11/21 |

ARCHITECTS SEAL:


East Coast Office
97 Elm Street
Hingham, MA 02116
T: 617.338.0050
F: 617.338.2537

West Coast Office
23591 Avenida de la Carlota
Laguna Hills, CA 92653
T: 949.716.8899
F: 949.716.8969

rauhaus freedenfeld & associates


# CAPITAL PROJECT 1483

## CONSTRUCTION OF A NEW ANIMAL SHELTER FACILITY
## 65 FIREMENS MEMORIAL DRIVE, POMONA, NY 10970

DRAWN BY: CRS
CHECKED BY: JLC
SCALE: AS NOTED
DATE: 20 OCT. 2021
PROJECT NO: 2019

PROGRESS SET ☐ BID SET ■ PERMIT SET ☐ CONSTRUCTION SET ☐

SANITARY PLAN

© 2021 RAUHAUS FREEDENFELD & ASSOCIATES, LLP.


CDi
620 Pennsylvania Ave
Winchester, VA 22601
Phone 540-665-2846
Fax 540-667-3284

Comfort Design Inc.
Mechanical & Electrical Engineers


Job # E2119

P1.01

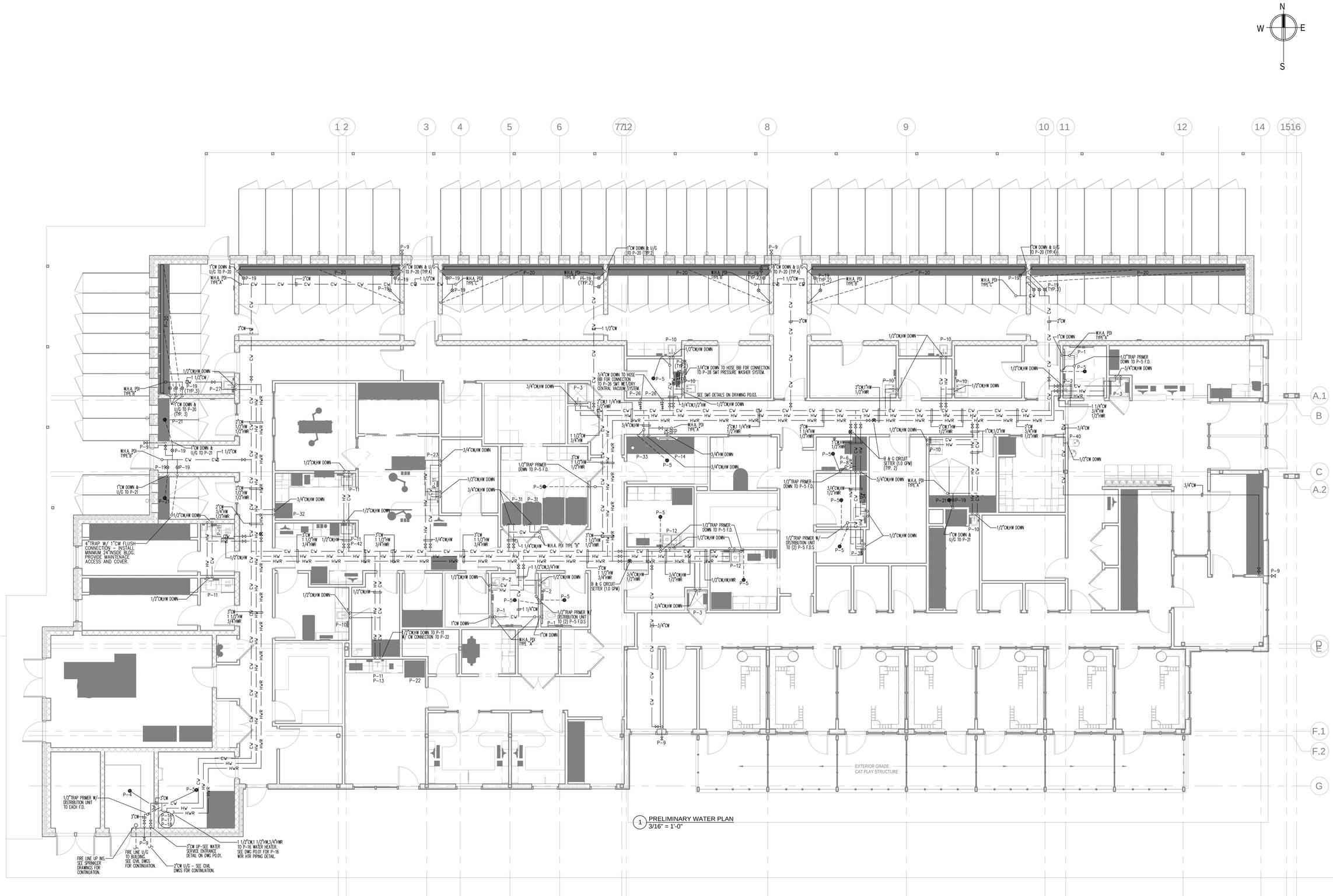


1 PRELIMINARY WATER PLAN
3/16" = 1'-0"

| NO. | REVISION DESCRIPTION | DATE |
|---|---|---|
| 1 | ADDENDUM #1 | 11/11/21 |

ARCHITECTS SEAL:


East Coast Office
97 Bow Street
Portsmouth, NH 03216
T: 617.338.0050
F: 617.426.2537

West Coast Office
2300 Main Street, Suite 9105
Irvine, CA 92614
T: 949.716.8899
F: 949.716.9969

rauhaus freedenfeld & associates


# CAPITAL PROJECT 1483

## CONSTRUCTION OF A NEW ANIMAL SHELTER FACILITY
## 65 FIREMENS MEMORIAL DRIVE, POMONA, NY 10970

DRAWN BY: CRS
CHECKED BY: JLC
SCALE: AS NOTED
DATE: 20 OCT. 2021
PROJECT NO: 2019

PROGRESS SET ☐ BID SET ■ PERMIT SET ☐ CONSTRUCTION SET ☐

WATER PLAN

© 2021 RAUHAUS FREEDENFELD & ASSOCIATES, LLP.


CDi
620 Pennsylvania Ave
Winchester, VA 22601
Phone 540-665-2846
Fax 540-667-3284

Comfort Design Inc.
Mechanical & Electrical Engineers

Job # E2119


P2.01

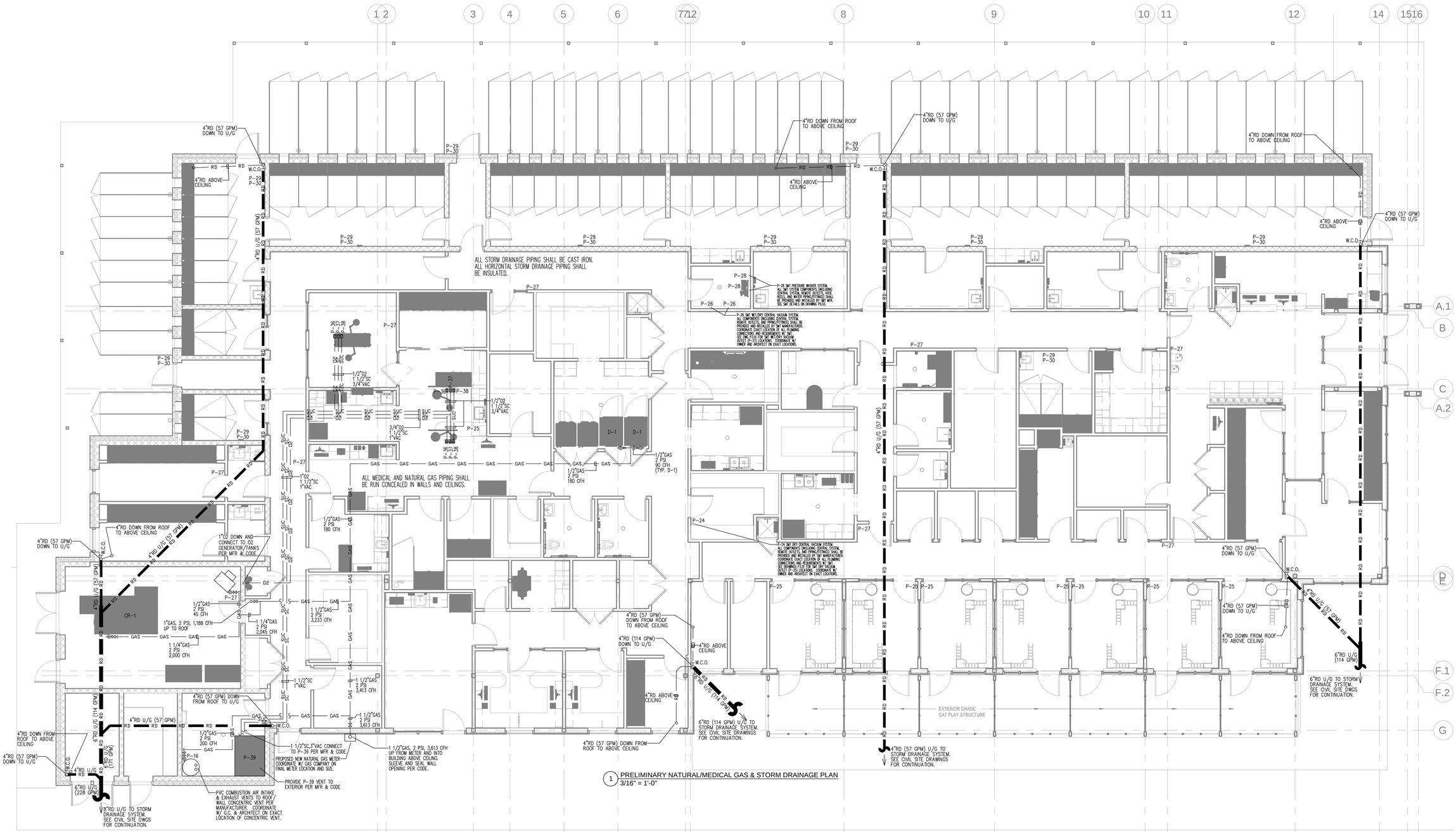


1 PRELIMINARY NATURAL/MEDICAL GAS & STORM DRAINAGE PLAN
3/16" = 1'-0"

| NATURAL GAS LOAD TABLE | | | | |
|---|---|---|---|---|
| MARK | UNIT DESCRIPTION | MFR OR EQUAL | MODEL | INPUT BTUH |
| P-16 | WATER HEATER | A.O. SMITH | BTH-199 | 200,000 |
| D-1 | COMMERCIAL DRYER | GIRBAU | CG30-40 | 90,000 |
| D-1 | COMMERCIAL DRYER | GIRBAU | CG30-40 | 90,000 |
| RTU-1 | ROOFTOP UNIT | CARRIER | 48HCFE08K2AA5DWH | 224,000 |
| RTU-2 | ROOFTOP UNIT | CARRIER | 48HCFE14K2AA5DWH | 240,000 |
| RTU-3 | ROOFTOP UNIT | CARRIER | 48HCFE12K2AA5DWH | 250,000 |
| RTU-4 | ROOFTOP UNIT | CARRIER | 48HCFE08K2AA5DWH | 224,000 |
| RTU-5 | ROOFTOP UNIT | CARRIER | 48HCFE12K2AA5DTH | 250,000 |
| GH-1 | UNIT HEATER | MODINE | HD45 | 45,000 |
| CR-1 | CREMATION UNIT | MES | IEB-16 | 2,000,000 |
| SUMMARY TOTALS FOR GAS LOADS | | | | 3,613 CFH |
| | | | | 3,613 CFH |

NATURAL GAS PIPE SIZING BASED ON THE 2020 FUEL GAS CODE OF NY STATE, TABLE 402.4(5). 2 PSI PRESSURE W/ 1.0 PSI PRESSURE DROP, GAS = 0.60 SPECIFIC GRAVITY, SCHEDULE 40 PIPE AND 150 FEET. (1000 BTUH = 1 CFH)

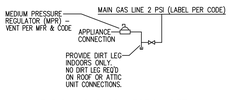


TYPICAL GAS CONNECTION DETAIL
NOT TO SCALE

GAS PIPING LEGEND:

- O2 — MEDICAL GAS GRADE COPPER OXYGEN (O2) PIPING W/ HANGERS/SUPPORTS PER CODE.
- SUC — MEDICAL GAS GRADE COPPER SUCTION (VAC) PIPING W/ HANGERS/SUPPORTS PER CODE.
- SC — SCH 40 PVC SCAVENGER (SC) PIPING W/ HANGERS/SUPPORTS PER CODE.
- GAS — NATURAL GAS SCH 40 STEEL PIPING W/ LABEL PER CODE.


CDi
Comfort Design Inc.
Mechanical & Electrical Engineers
620 Pennsylvania Ave
Winchester, VA 22601
Phone 540-665-2846
Fax 540-667-3284
Job # E2119


| REVISION | | |
|---|---|---|
| NO. | DESCRIPTION | DATE |
| 1 | ADDENDUM #1 | 11/11/21 |

ARCHITECTS SEAL:


East Coast Office
97 Elm Street
Hingham, MA 02116
T: 617.338.0050
F: 617.428.2537

West Coast Office
23591 Mill Creek, Suite 215
Laguna Hills, CA 92653
T: 949.716.8899
F: 949.716.8969

rauhaus freedenfeld & associates


# CAPITAL PROJECT 1483

## CONSTRUCTION OF A NEW ANIMAL SHELTER FACILITY
## 65 FIREMENS MEMORIAL DRIVE, POMONA, NY 10970

DRAWN BY: CRS
CHECKED BY: JLC
SCALE: AS NOTED
DATE: 20 OCT. 2021
PROJECT NO: 2019

NATURAL/MEDICAL GAS & STORM DRAINAGE PLAN

PROGRESS SET ☐ BID SET ■ PERMIT SET ☐ CONSTRUCTION SET ☐

P3.01

© 2021 RAUHAUS FREEDENFELD & ASSOCIATES, LLP

ROOF DRAIN ANALYSIS PER 2020 PLUMBING CODE OF NEW YORK STATE SECTION 1106, TABLE 1106.2:

ROOF AREA = 16,058 S.F./9 ROOF DRAINS = 1,785 S.F. EACH RD
1,785 S.F X 3"PER HOUR DESIGN RAINFALL RATE = 57 GPM

BASED ON 3" PER HOUR RAINFALL RATE:

PER TABLE 1106.2:

4" HORIZONTAL PIPING AT 1/8" SLOPE PER 12 UNITS HAS 115 GPM MAXIMUM DRAINAGE CAPACITY.
6" HORIZONTAL PIPING AT 1/8" SLOPE PER 12 UNITS HAS 344 GPM MAXIMUM DRAINAGE CAPACITY.
8" HORIZONTAL PIPING AT 1/8" SLOPE PER 12 UNITS HAS 714 GPM MAXIMUM DRAINAGE CAPACITY.

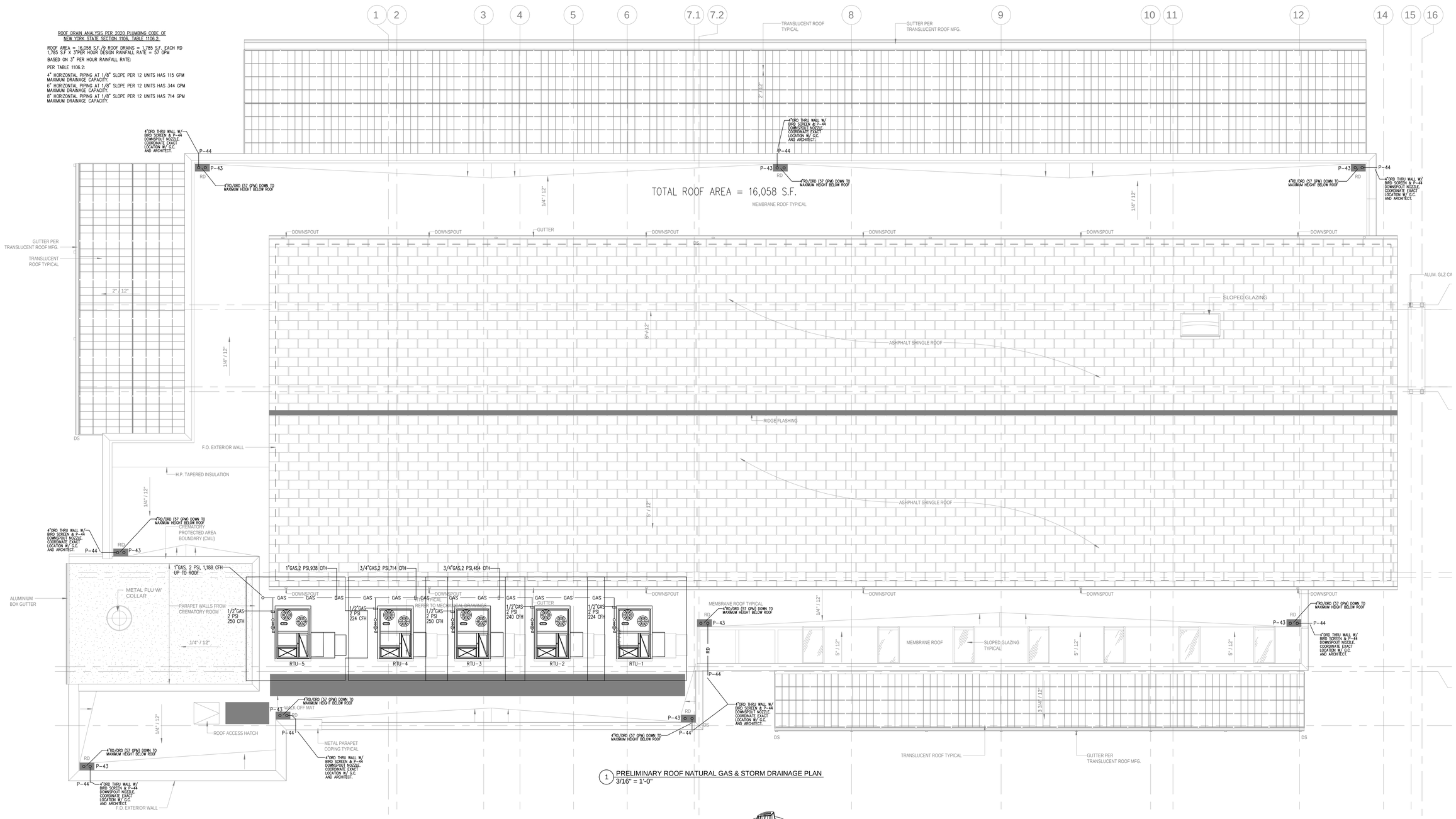


1 PRELIMINARY ROOF NATURAL GAS & STORM DRAINAGE PLAN
3/16" = 1'-0"

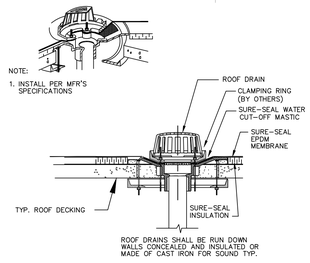


TYPICAL ROOF DRAIN DETAIL
NOT TO SCALE


CDi
Comfort Design Inc.
Mechanical & Electrical Engineers
620 Pennsylvania Ave
Winchester, VA 22601
Phone 540-665-2846
Fax 540-667-3284
Job # E2119


| NO. | REVISION DESCRIPTION | DATE |
|---|---|---|
| 1 | ADDENDUM #1 | 11/11/21 |

ARCHITECTS SEAL:


East Coast Office
87 Elm Street
Hopkinton, MA 02116
T: 617.338.0050
F: 617.426.2537

West Coast Office
23591 Mill Creek, #105
Laguna Hills, CA 92653
T: 949.716.8899
F: 949.716.9969

rf&a
rauhaus freedenfeld & associates


# CAPITAL PROJECT 1483
## CONSTRUCTION OF A NEW ANIMAL SHELTER FACILITY
## 65 FIREMENS MEMORIAL DRIVE, POMONA, NY 10970

DRAWN BY: CRS
CHECKED BY: JLC
SCALE: AS NOTED
DATE: 20 OCT 2021
PROJECT NO: 2019

ROOF NATURAL GAS & STORM DRAINAGE PLAN

PROGRESS SET ☐ | BID SET ■ | PERMIT SET ☐ | CONSTRUCTION SET ☐

© 2021 RAUHAUS FREEDENFELD & ASSOCIATES, LLP.

P3.02