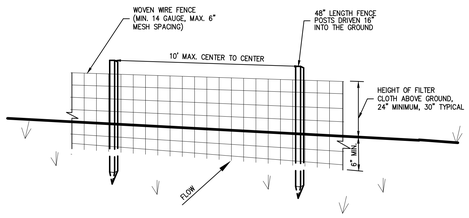


PERSPECTIVE VIEW

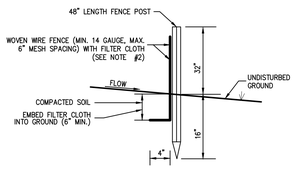


SECTION

| SLOPE | STEEPNESS | SLOPE LENGTH/FENCE LENGTH (FT.) |
|---|---|---|
| 2–10% | 50:1 TO 10:1 | 250/2000 |
| 10–20% | 10:1 TO 5:1 | 150/1000 |
| 20–33% | 5:1 TO 3:1 | 80/750 |
| 33–50% | 3:1 TO 2:1 | 70/350 |
| >50% | >2:1 | 30/175 |

*ALL SILT FENCES SHALL BE PLACED AS CLOSE TO THE DISTURBED AREA AS POSSIBLE, BUT AT LEAST 10 FEET FROM THE TOE OF A SLOPE STEEPER THAN 3H:1V, TO ALLOW FOR MAINTENANCE AND ROLL DOWN. THE AREA BEYOND THE FENCE MUST BE UNDISTURBED OR STABILIZED.

NOTES:

1. WOVEN WIRE FENCE SHALL BE FASTENED SECURELY TO FENCE POSTS WITH WIRE TIES OR STAPLES. POSTS SHALL BE STEEL, EITHER T OR U TYPE OR HARDWOOD.
2. FILTER CLOTH SHALL BE FASTENED SECURELY TO WOVEN WIRE FENCE WITH TIES SPACED EVERY 24" AT TOP AND MID SECTION. FENCE SHALL BE WOVEN WIRE, 6" MAXIMUM MESH OPENING.
3. WHEN TWO SECTIONS OF FILTER CLOTH ADJOIN EACH OTHER, THEY SHALL BE OVERLAPPED BY SIX INCHES AND FOLDED. FILTER CLOTH SHALL BE EITHER FILTER X, MIRAFI 100X, STABLINKA T140N, OR APPROVED EQUAL.
4. PREFABRICATED UNITS SHALL BE GEOFAB, ENVIROFENCE, OR APPROVED EQUAL.
5. MAINTENANCE SHALL BE PERFORMED AS NEEDED AND MATERIAL REMOVED AND REPLACED WHEN "BULGES" DEVELOP IN THE SILT FENCE.

## SILT FENCE — 1

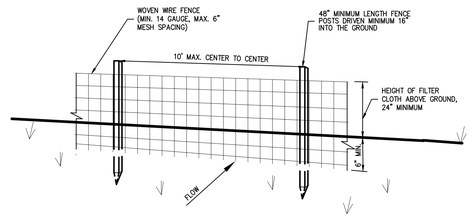


PERSPECTIVE VIEW

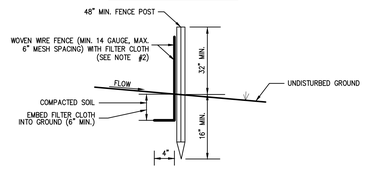


SECTION

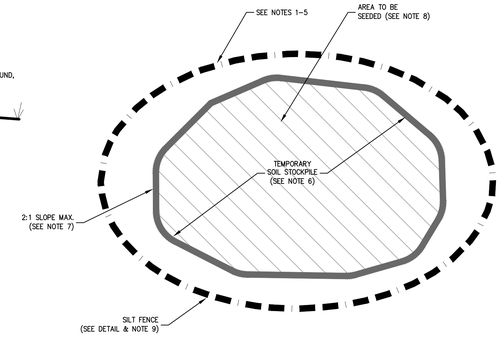


PLAN VIEW

NOTES:

1. WOVEN WIRE FENCE SHALL BE FASTENED SECURELY TO FENCE POSTS WITH WIRE TIES OR STAPLES. POSTS SHALL BE STEEL, EITHER T OR U TYPE OR HARDWOOD.
2. FILTER CLOTH SHALL BE FASTENED SECURELY TO WOVEN WIRE FENCE WITH TIES SPACED EVERY 24" AT TOP AND MID SECTION. FENCE SHALL BE WOVEN WIRE, 6" MAXIMUM MESH OPENING.
3. WHEN TWO SECTIONS OF FILTER CLOTH ADJOIN EACH OTHER, THEY SHALL BE OVERLAPPED BY SIX INCHES AND FOLDED. FILTER CLOTH SHALL BE EITHER FILTER X, MIRAFI 100X, STABLINKA T140N, OR APPROVED EQUAL.
4. PREFABRICATED UNITS SHALL BE GEOFAB, ENVIROFENCE, OR APPROVED EQUAL.
5. MAINTENANCE SHALL BE PERFORMED AS NEEDED AND MATERIAL REMOVED AND REPLACED WHEN "BULGES" DEVELOP IN THE SILT FENCE.
6. THE AREA CHOSEN FOR ALL TEMPORARY SOIL STOCKPILES SHALL BE DRY AND STABLE.
7. ALL STOCKPILED SOIL SHALL NOT CONTAIN SLOPES GREATER THAN 2:1.
8. UPON COMPLETION OF SOIL STOCKPILING, EACH PILE SHALL BE SEEDED WITHIN 24 HOURS. PERENNIAL OR ANNUAL RYEGRASS SHALL BE PLANTED DURING SPRING, SUMMER OR EARLY FALL. WINTER RYE (CEREAL RYE) SHALL BE PLANTED DURING LATE FALL OR EARLY WINTER.
9. ALL STOCKPILES SHALL BE PROTECTED WITH SILT FENCING INSTALLED AROUND THE PERIMETER.

## TEMPORARY SOIL STOCKPILE WITH SILT FENCE — 2

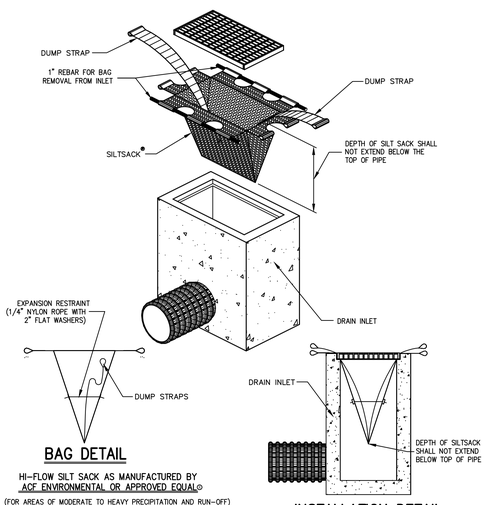


BAG DETAIL

INSTALLATION DETAIL

HI-FLOW SILT SACK AS MANUFACTURED BY ACF ENVIRONMENTAL OR APPROVED EQUAL©

(FOR AREAS OF MODERATE TO HEAVY PRECIPITATION AND RUN-OFF)

| PROPERTIES | TEST METHOD | UNITS |
|---|---|---|
| GRAB TENSILE STRENGTH | ASTM D-4632 | 265 LBS |
| GRAB TENSILE ELONGATION | ASTM D-4632 | 20 % |
| PUNCTURE | ASTM D-4833 | 135 LBS |
| MULLEN BURST | ASTM D-3786 | 420 PSI |
| TRAPEZOID TEAR | ASTM D-4533 | 45 LBS |
| UV RESISTANCE | ASTM D-4355 | 90 % |
| APPARENT OPENING SIZE | ASTM D-4751 | 20 US SIEVE |
| FLOW RATE | ASTM D-4491 | 200 GAL/MIN/SQ FT |
| PERMITTIVITY | ASTM D-4491 | 1.5 SEC -1 |

NOTE:
CURB INLETS SHALL BE TYPE B WITH CURB DEFLECTOR.

## MANUFACTURED INSERT INLET PROTECTION — 3

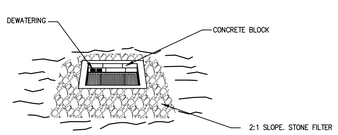


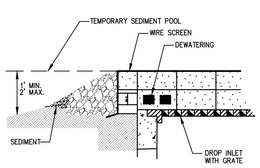


STONE & BLOCK DETAIL

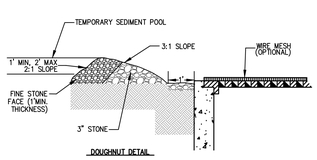


DOUGHNUT DETAIL

NOTES:

1. LAY ONE BLOCK ON EACH SIDE OF THE STRUCTURE ON ITS SIDE FOR DEWATERING. FOUNDATION SHALL BE 2 INCHES MINIMUM BELOW REST OF INLET AND BLOCKS SHALL BE PLACED AGAINST INLET FOR SUPPORT.
2. HARDWARE CLOTH OR 1/2" WIRE MESH SHALL BE PLACED OVER BLOCK OPENINGS TO SUPPORT STONE.
3. USE CLEAN STONE 1/2" TO 3/4" IN DIAMETER PLACED 2" BELOW THE TOP OF THE BLOCK ON A 2:1 SLOPE OR FLATTER.
4. FOR STONE STRUCTURES ONLY, A 1 FOOT THICK LAYER OF THE FILTER STONE WILL BE PLACED AGAINST THE 3" STONE AS SHOWN ON THE DRAWINGS.

## STONE & BLOCK DROP INLET PROTECTION — 4

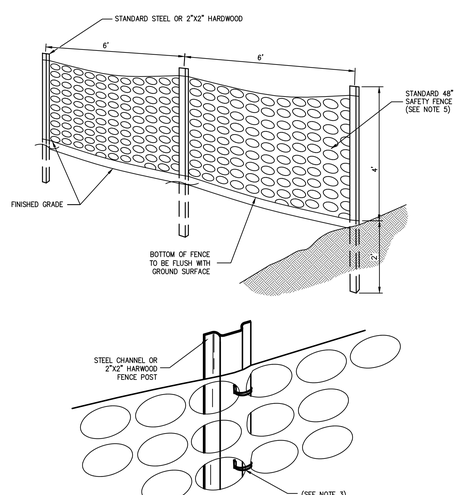


NOTES:

1. SPACE SUPPORT FENCE POSTS AT 6 FOOT INTERVALS.
2. DRIVE SUPPORT POSTS 2 FEET INTO GROUND.
3. FIRMLY FASTEN FENCE MATERIAL IN PLACE BY WIRING TO FENCE POST WHILE MAINTAINING TENSION ACROSS FULL HEIGHT OF FENCE. WIRING SHALL BE DONE IN A MANNER THAT WILL PREVENT SAGGING OF FENCE MATERIAL.
4. PROVIDE PERIODIC INSPECTION AND MAINTENANCE OF FENCE INCLUDING REPAIRS AS NECESSARY AND REQUIRED.
5. PLASTIC FENCE SHALL BE INTERNATIONAL ORANGE COLOR, AS MANUFACTURED BY ADPI ENTERPRISES, INC. OR APPROVED EQUAL.
6. REMOVE CONSTRUCTION FENCE AS DIRECTED BY THE OWNER'S FIELD REPRESENTATIVE.

## TEMPORARY PLASTIC CONSTRUCTION FENCE — 5

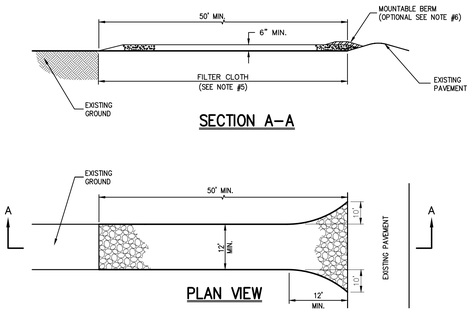


SECTION A–A

PLAN VIEW

NOTES

1. STONE SIZE – USE 1" TO 4" STONE, OR RECLAIMED OR RECYCLED CONCRETE EQUIVALENT.
2. LENGTH – AS REQUIRED, BUT NOT LESS THAN 50 FEET.
3. THICKNESS – NOT LESS THAN SIX (6) INCHES.
4. WIDTH – 12 FOOT MINIMUM, BUT NOT LESS THAN THE FULL WIDTH AT POINTS WHERE INGRESS OR EGRESS OCCURS. 24 FOOT MINIMUM IF SINGLE ENTRANCE TO SITE.
5. FILTER CLOTH TO BE PLACED OVER THE ENTIRE WIDTH AND LENGTH OF AREA PRIOR TO PLACING OF STONE.
6. SURFACE WATER – ALL SURFACE WATER FLOWING OR DIVERTED TOWARD CONSTRUCTION ENTRANCES SHALL BE PIPED BENEATH THE ENTRANCE. IF PIPING IS IMPRACTICAL, A MOUNTABLE BERM WITH 5:1 SLOPES WILL BE PERMITTED.
7. MAINTENANCE – THE ENTRANCE SHALL BE MAINTAINED IN A CONDITION WHICH WILL PREVENT TRACKING OR FLOWING OF SEDIMENT ONTO PUBLIC RIGHTS-OF-WAY. THIS MAY REQUIRE PERIODIC TOP DRESSING WITH ADDITIONAL STONE AS CONDITIONS DEMAND AND REPAIR AND/OR CLEANOUT OF ANY MEASURE USED TO TRAP SEDIMENT. ALL SEDIMENT SPILLED, DROPPED, WASHED OR TRACKED ONTO PUBLIC RIGHTS-OF-WAY MUST BE REMOVED IMMEDIATELY.
8. WASHING – WHEELS SHALL BE CLEANED TO REMOVE SEDIMENT PRIOR TO ENTRANCE ONTO PUBLIC RIGHTS-OF-WAY. WHEN WASHING IS REQUIRED, IT SHALL BE DONE ON AN AREA STABILIZED WITH STONE AND WHICH DRAINS INTO AN APPROVED SEDIMENT TRAPPING DEVICE.
9. PERIODIC INSPECTION AND NEEDED MAINTENANCE SHALL BE PROVIDED AFTER EACH RAIN.

## STABILIZED CONSTRUCTION ENTRANCE — 6

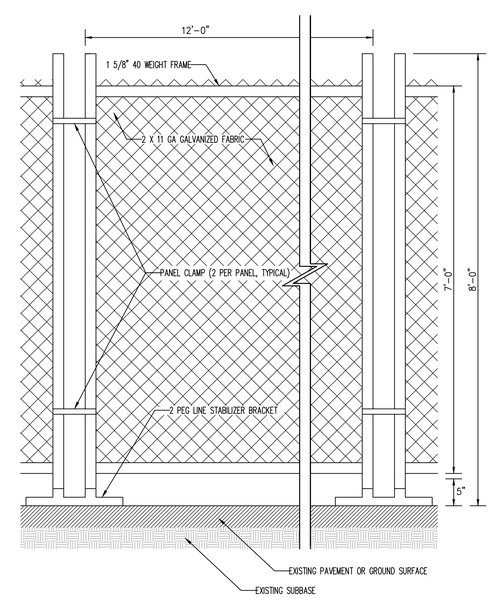


NOTE:
STABILIZED BRACKET TO BE HOT DIPPED GALVANIZED STEEL PIPE.

## TEMPORARY CHAIN LINK CONSTRUCTION FENCE — 7


**REGENERON**
REAL ESTATE & FACILITIES MANAGEMENT

777 Old Saw Mill River Road
Tarrytown, NY 10591-6707
T: 914.847.7400
F: 914.847.7991
www.regeneron.com


BUILDING #17
CAMPUS EXPANSION CHILD DAY–CARE CENTER

899 OLD SAW MILL RIVER ROAD
MOUNT PLEASANT, NY 10591


Civil Engineer:
Site Development Consultants
120 Bedford Road
Armonk, NY 10504
914-273-5225
www.jmcpllc.com

Attorney:
DelBello Donnellan Weingarten Wise & Wiederkehr, LLP
One North Lexington Avenue, 11th Floor
White Plains, New York 10601
Phone: (914) 681-0200

Geotechnical Engineer:
Carlin-Simpson & Associates
61 Main Street
Sayreville, NJ 08872
Phone: (732) 432-5757

Architect:
Gensler
1700 Broadway, Suite 400
New York, New York 10019
Phone: (212) 492-1400
Fax: (212) 492-1472

Landscape Architect (Playground):
Langan
21 Penn Plaza, 360 West 31st Street, 8th Floor
New York, New York 10001
Phone: (212) 479-5400
Fax: (212) 479-5444

MEP/IT/Security Engineer:
Cosentini Associates
498 Seventh Avenue
New York, New York 10018
Phone: (212) 615-3600
Fax: (212) 615-3700


| No. | Date | Description |
|---|---|---|

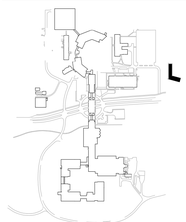

| No. | Date | Description |
|---|---|---|
| 0 | 05/20/2022 | ISSUED FOR PERMIT |
| 1 | 06/20/2022 | 100% CONSTRUCTION DOCUMENTS |
| 2 | 07/01/2022 | 100% CONSTRUCTION DOCUMENTS - 1 |


ALL DRAWINGS AND WRITTEN MATERIALS REPRESENTED ON THIS SHEET CONSTITUTE THE COPYRIGHTED WORK AND ARE THE SOLE PROPERTY OF REGENERON PHARMACEUTICALS. THIS SHEET MAY NOT BE REPRODUCED OR COPIED IN WHOLE OR IN PART, NOR MAY ANY OF THE DRAWINGS OR WRITTEN MATERIALS APPEARING WITHIN, BE INCORPORATED INTO ANOTHER WORK FOR ANY REASON WITHOUT THE WRITTEN CONSENT OF REGENERON PHARMACEUTICALS. THIS SHEET MUST BE RETURNED UPON THE REQUEST OF REGENERON PHARMACEUTICALS.


Professional Seal and Signature

ANY ALTERATION OF PLANS, SPECIFICATIONS, PLATS AND REPORTS BEARING THE SEAL OF A LICENSED PROFESSIONAL ENGINEER OR LICENSED LAND SURVEYOR IS A VIOLATION OF SECTION 7209 OF THE NEW YORK STATE EDUCATION LAW, EXCEPT AS PROVIDED FOR BY SECTION 7209, SUBSECTION 2.

Vendor Name: JMC, PLLC
Vendor Project No.: 20090-3
Discipline: Civil Drawn By: TC
Drawing Title:

CONSTRUCTION DETAILS

Scale: N.T.S.

C–900


© 2021 REGENERON PHARMACEUTICALS INC.


20090-3-DETAILS.dwg; C-900.tdb;