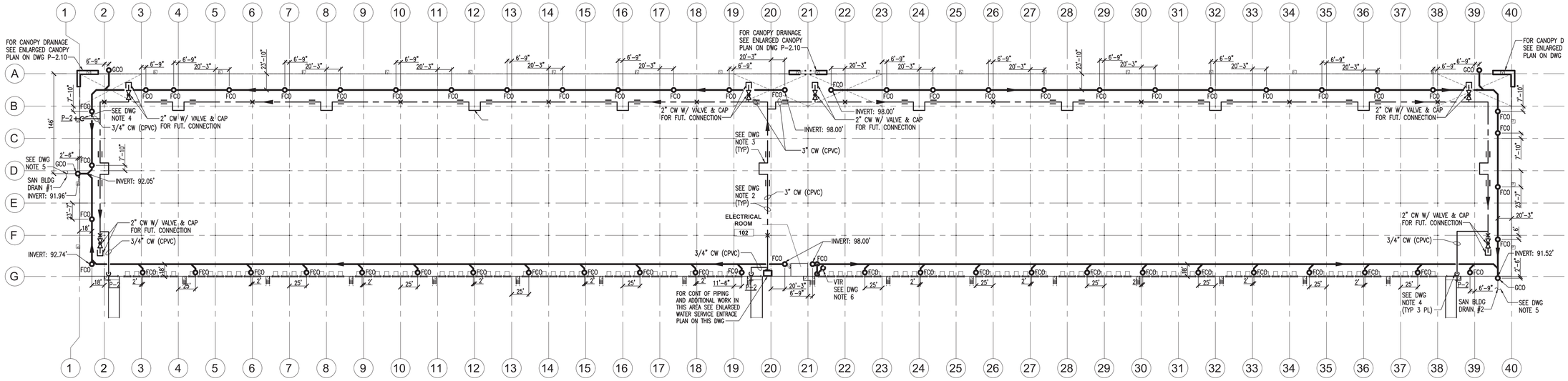

PLUMBING – BUILDING OVERALL FLOOR PLAN – DRAINAGE & WATER PIPING

SCALE: 1/64" = 1'-0" FIN FLR 100.00'

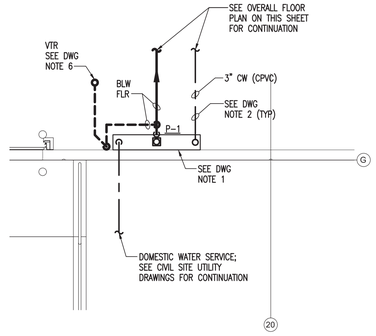

PLUMBING – ENLARGED WATER SERVICE ENTRANCE PLAN

SCALE: 1/4" = 1'-0"

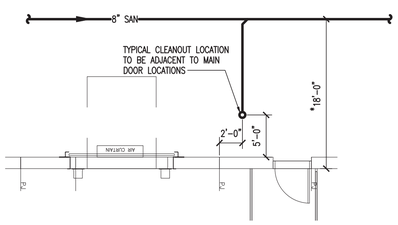

TYPICAL CLEANOUT DETAIL (MANDOOR)

NO SCALE (SOUTH SIDE)

*NOTE: THIS DIMENSION IS 15'-0" AT CLEANOUTS ON SANITARY BLDG DRAIN #2 BETWEEN COLUMN LINES 30 TO 38

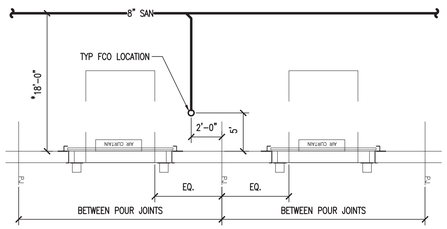

TYPICAL CLEANOUT DETAIL (OVERHEAD DOOR)

NO SCALE

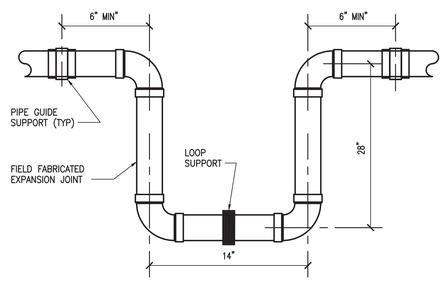

NOTES:

1. EXPANSION LOOP DIMENSIONS, BASIS OF DESIGN IS THREE (3) INCH CPVC PIPE, 50 DEGREE FAHRENHEIT TEMPERATURE CHANGE FOR A LENGTH OF PIPE BETWEEN ANCHORS 220 +/- FEET.
2. INSTALL EXPANSION LOOP AS CLOSELY AS POSSIBLE TO MID-POINT BETWEEN ANCHORS.
3. DO NOT INSTALL RIGID OR RESTRAINING SUPPORTS WITHIN LEG LENGTH OF LOOPS.
4. ALL PIPE AND FITTING CONNECTIONS SHALL BE SOLVENT CEMENT, DO NOT USE THREAD CONNECTIONS.
5. PIPE GUIDE SUPPORTS SHOULD RESTRICT LATERAL MOVEMENT AND DIRECT AXIAL MOVEMENT INTO THE LOOP.

EXPANSION LOOP DIAGRAM

NO SCALE

LEGEND AND ABBREVIATIONS

	SANITARY PIPING (SAN)
	SANITARY VENT PIPING (SV)
	COLD WATER PIPING (CW)
	PIPE TURNING UP
	PIPE TURNING DOWN
	PIPE ANCHOR
	PIPE GUIDE
	BALL VALVE
	WALL HYDRANT
P-__	FIXTURE REFERENCE NUMBER
CONT	CONTINUATION
DFU	DRAINAGE FIXTURE UNIT
DWG	DRAWING
EQUIP	EQUIPMENT
FCO	FLOOR CLEANOUT
FD	FLOOR DRAIN
FF. EL.	FINISHED FLOOR ELEVATION
GCO	GRADE CLEANOUT
INV. EL.	INVERT ELEVATION
TYP	TYPICAL
VTR	VENT THRU ROOF
WTR	WATER
#	NUMBER

GENERAL NOTES:

1. ALL PLUMBING WORK SHALL CONFORM TO THE NEW YORK UNIFORM CONSTRUCTION CODES, 2020 NEW YORK PLUMBING CODE (2018 INTERNATIONAL PLUMBING CODE) AND SUBSEQUENT AMENDMENTS THERETO AS ADOPTED BY THE TOWN OF SOUTHEAST, NEW YORK AND SUBSEQUENT AMENDMENTS THERETO.
2. DRAWINGS ARE DIAGRAMMATIC. COORDINATE ALL EQUIPMENT LOCATIONS AND PIPE ROUTING WITH OTHER TRADES AND ARCHITECTURAL DETAILS PRIOR TO INSTALLATION.
3. VERIFY LOCATIONS, MOUNTING HEIGHTS, TRIM LOCATIONS, ETC. FOR ALL PLUMBING FIXTURES WITH THE ARCHITECT PRIOR TO INSTALLATION. P-__ DESIGNATES FIXTURE AND FIXTURE TRIM. MOUNTING OF ALL ADA FIXTURES AND RELATED TRIM TO MEET THE AMERICAN DISABILITIES ACT GUIDELINES AND ANSI REQUIREMENTS FOR PEOPLE WITH DISABILITIES.
4. INTENT IS TO CONCEAL ALL PIPING IN WALLS/CHASE SPACE, BELOW FLOORS, AND ABOVE CEILINGS UNLESS OTHERWISE NOTED. INSTALL ALL WATER SUPPLY PIPING AT EXTERIOR WALLS ON THE INSIDE (WARM SIDE) OF THE BUILDING INSULATION. SEAL ALL PIPING PENETRATIONS THROUGH RATED ASSEMBLIES ACCORDINGLY. REFER TO ARCHITECTURAL DRAWINGS FOR FIRE AND SOUND RATED PARTITIONS, CEILINGS, AND FLOORS.
5. THE PLUMBING CONTRACTORS UTILITY WORK SHALL INCLUDE, BUT NOT BE LIMITED TO, THE FOLLOWING:

   DOMESTIC WATER SYSTEM – NEW DOMESTIC WATER SYSTEM. CONNECT NEW WATER PIPING AS SHOW TO THE NEW WATER SERVICE.

   SANITARY DRAINAGE SYSTEM – CONNECTS OF THE TWO (2) SANITARY BUILDING DRAINS PIPING AS SHOWN TO THE SANITARY BUILDING SEWERS.

   STORM WATER DRAINAGE SYSTEM – CONNECT NEW ROOF DRAINAGE DOWNSPOUTS AND ROOF DRAIN CONDUCTORS TO THE STORM WATER BUILDING SEWER.

DRAWING NOTES:

1. PROVIDE BUILDING DOMESTIC WATER SUPPLY DISTRIBUTION PIPING AND SERVICE ENTRANCE EQUIPMENT AND CONNECTION TO BUILDING WATER SUPPLY AS SHOWN. SEE "DOMESTIC WATER SERVICE ENTRANCE PIPING DIAGRAM" ON DRAWING P-3.10. PRIOR TO THE START OF ANY NEW WATER SUPPLY SYSTEM WORK THIS CONTRACTOR IS RESPONSIBLE FOR VERIFICATION OF TIE-IN POINT.
2. THE INSTALLATION OF ALL BUILDING WATER SUPPLY DISTRIBUTION PIPING SHALL BE ABOVE BOTTOM CHORD OF ROOF JOISTS.
3. PROVIDE FIELD FABRICATED EXPANSION LOOP. INSTALL AND ANCHOR IN ACCORDANCE WITH THE PIPING MANUFACTURERS WRITTEN INSTALLATION INSTRUCTIONS. SEE "EXPANSION LOOP DIAGRAM" ON THIS DRAWING.
4. COORDINATE FINAL LOCATION OF WALL HYDRANT DROPS IN THE FIELD. INSTALL HYDRANT AT 18 INCHES ABOVE FINISH FLOOR AND PROVIDE BALL VALVE IN DROP TO WALL HYDRANT AT 5'-0" A.F.F. ALL PIPING DROPS TO HYDRANTS TO BE TYPE "L" COPPER.
5. CONNECT SANITARY BUILDING DRAINAGE PIPING AS SHOWN TO SANITARY BUILDING SEWER. REFER TO SITE UTILITY PLANS FOR LOCATION. PRIOR TO THE START OF ANY NEW SANITARY DRAINAGE SYSTEM WORK THIS CONTRACTOR IS RESPONSIBLE FOR VERIFICATION OF INVERT ELEVATION AT TIE-IN POINT AND ROUTING WITH BUILDING FOOTINGS.
6. ROUTE VENT PIPING EXPOSED ON WALL AND CONNECT TO VENT THROUGH ROOF AS SHOWN ON SANITARY RISER DIAGRAM.

FINAL REVIEW 03/11/2022
NOT FOR CONSTRUCTION

McCARTHY ENGINEERING ASSOCIATES, INC.
www.McCarthy-Engineering.com
2500 East High Street, Suite 630
Pottstown, PA 19464
Phone: 610.313.8001
Project No. 221001

DESIGNER / BUILDER
ARCO DESIGN/BUILD INDUSTRIAL
44 SOUTH BROADWAY, SUITE 1003
WHITE PLAINS, NY 10601
P: 914.821.5535 F: 914.306.6010

ADBI | DESIGN SERVICES

PROJECT TITLE
LINCOLN EQUITIES - NY-312 - ALT. BLDG B
NY-312 & PUGSLEY RD, SOUTHEAST, NY 10509

ARCHITECT
ADBI / DESIGN SERVICES LLC
44 SOUTH BROADWAY, SUITE 1003
WHITE PLAINS, NY 10601

CIVIL ENGINEER
JMC PLANNING, ENGINEERING, LANDSCAPING PLLC.
120 BEDFORD ROAD
ARMONK, NY 10504

STRUCTURAL ENGINEER
SMITH/ ROBERTS AND ASSOCIATES, INC.
6501 BLUFF RD.
INDIANAPOLIS, INDIANA 46217

MECHANICAL ENGINEER
COMPANY NAME
STREET ADDRESS
CITY, STATE ZIP

ELECTRICAL ENGINEER
COMPANY NAME
STREET ADDRESS
CITY, STATE ZIP

PLUMBING ENGINEER
COMPANY NAME
STREET ADDRESS
CITY, STATE ZIP

FIRE PROTECTION ENGINEER
COMPANY NAME
STREET ADDRESS
CITY, STATE ZIP

SEAL

JOSEPH V. DIGIORGIO | NY: 042948

KEY PLAN

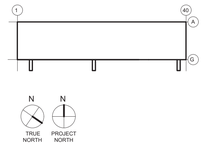

SUBMITTALS

NO.	DATE	DESCRIPTION

PROJECT NO. AS286-21/ NY131

DRAWN BY ZPC

SHEET TITLE
PLUMBING OVERALL FLOOR PLAN

SHEET NO.
P-1.10

PRINTED ARCH E1 30" X 42" 2/3/2022 2:36:57 PM