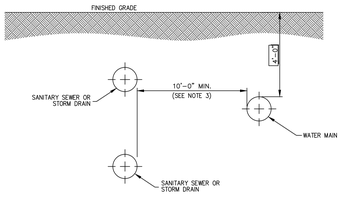

HORIZONTAL SEPARATION

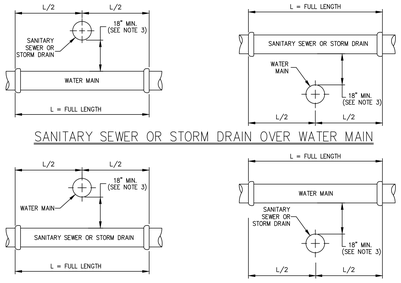

SANITARY SEWER OR STORM DRAIN OVER WATER MAIN

WATER MAIN OVER SANITARY SEWER OR STORM DRAIN

VERTICAL SEPARATION

NOTES:

1. NORMAL CONDITIONS:
   - A. WHENEVER A WATER MAIN MUST CROSS OVER OR UNDER A SANITARY SEWER OR STORM DRAIN, THE PIPES SHALL BE LAID TO PROVIDE A VERTICAL SEPARATION BETWEEN THEM OF AT LEAST 18 INCHES, AS MEASURED FROM THE BOTTOM OF THE HIGHER PIPE TO THE CROWN OF THE LOWER PIPE.
   - B. FULL LENGTH OF WATER PIPE MUST BE CENTERED AT THE POINT OF CROSSING; NO JOINTS WILL BE PERMITTED AT THE POINT OF CROSSING.
2. WATER MAIN CROSSING UNDER SANITARY SEWERS:
   - A. VERTICAL SEPARATION OF 18 INCHES MUST BE PROVIDED.
   - B. ADEQUATE STRUCTURAL SUPPORT MUST BE PROVIDED FOR THE SANITARY SEWER TO PREVENT EXCESSIVE DEFLECTION OF JOINTS AND SETTLING.
   - C. FULL LENGTH OF WATER PIPE MUST BE CENTERED AT THE POINT OF CROSSING; NO JOINTS WILL BE PERMITTED AT THE POINT OF CROSSING.
3. IF DURING CONSTRUCTION IT IS FOUND THAT THE REQUIRED SEPARATION OF WATER MAINS, SANITARY SEWERS, STORM SEWERS AND BUILDING SANITARY SEWERS CANNOT BE MET, THE CONTRACTOR OR HIS AUTHORIZED REPRESENTATIVE SHALL IN WRITING ADVISE JOHN MEYER CONSULTING OF THE SPECIFIC CONDITIONS ENCOUNTERED. APPROVAL OF ALTERNATIVE SEPARATION CRITERIA SHALL BE OBTAINED FROM THE PUTNAM COUNTY DEPARTMENT OF HEALTH PRIOR TO INSTALLATION.

SEPARATION OF WATER AND SANITARY SEWER/STORM DRAIN LINES | 11

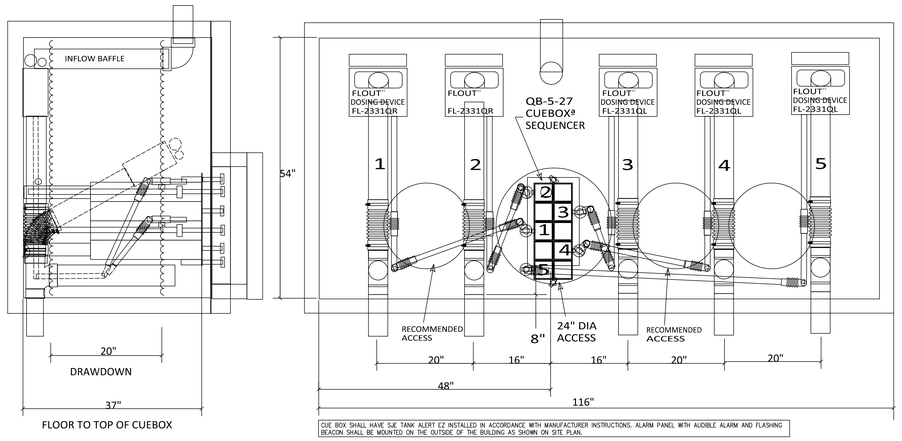

NOTES:

1. CUE BOXES SHALL BE MANUFACTURED BY RISSY PLASTICS THEY SHALL BE SET TO ALTERNATE ON THEIR OWN.
2. BOX SHALL BE SET ON A 4" BED OF GRAVEL.
3. PROVIDE MANHOLE CASTING TO GRADE.
4. CUE BOX SHALL HAVE SJE TANK ALERT EZ INSTALLED IN ACCORDANCE WITH MANUFACTURER INSTRUCTIONS. ALARM PANEL WITH AUDIBLE ALARM AND FLASHING BEACON SHALL BE MOUNTED ON THE OUTSIDE OF THE BUILDING AS SHOWN ON SITE PLAN.

A PROPOSED DOSING CHAMBER WITH FIVE FLOUT™ DOSING DEVICES EACH WITH ONE 4 INCH DIAMETER OUTLET . DOSING SEQUENCE CONTROLLED BY A CUEBOX® SEQUENCER. 20 INCH DRAWDOWN.
DOSING DEVICES BY RISSY PLASTICS, 350 CEDAR LANE TORRINGTON, CT 06790 860-482-1645 RISSYPLASTICS.COM
FLOUT.NET TANXRUS@AOL.COM PRECAST CONCRETE/ OTHER MATERIAL CHAMBER BY OTHERS

FLOUT™ US PATENT 5290434 CUEBOX® US PATENT PENDING ©2010 JAMES RICHARD DRAWING BY JAMES RICHARD

SYSTEM : FLQ-2331X5

RISSY PLASTICS CUE BOX ALTERNATE DOSING CHAMBER (5 OUTLETS) | 12

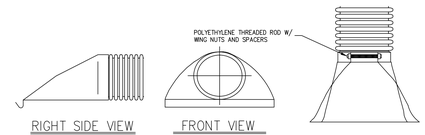

NOTES:

1. FASTENERS SHALL BE GALVANIZED STEEL.
2. ALL DIMENSIONS ARE NOMINAL.
3. WITH RODENT GUARD.
4. END SECTION SHALL BE MANUFACTURED BY J & J DRAINAGE OR APPROVED EQUAL

PIPE SIZE	A	B (MAX.)	H	L	W
4"	4"	1"	3"	8"	12.0"

CURTIAN DRAIN OUTLET | 13

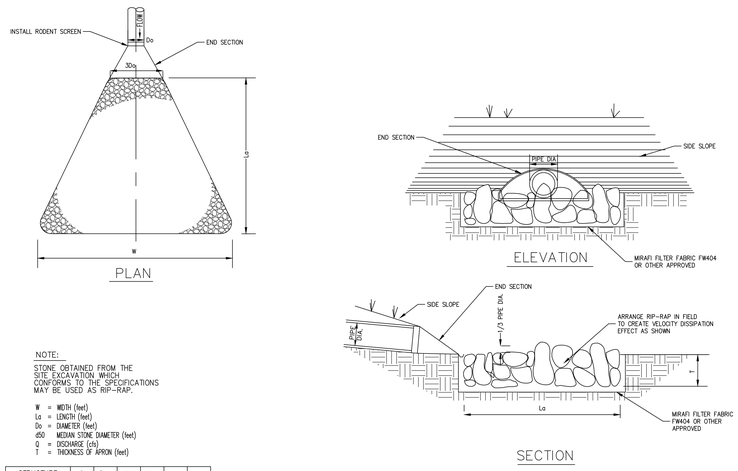

NOTE:
STONE OBTAINED FROM THE SITE EXCAVATION WHICH CONFORMS TO THE SPECIFICATIONS MAY BE USED AS RIP-RAP.

W = WIDTH (feet)
La = LENGTH (feet)
Do = DIAMETER (feet)
d50 = MEDIAN STONE DIAMETER (feet)
Q = DISCHARGE (cfs)
T = THICKNESS OF APRON (feet)

STRUCTURE	Q	Do	W	La	d50	T
CURTAIN DRAIN OUTLET	0.60	0.33	2.33	2	0.33	0.75

RIP-RAP APRON/ENERGY DISSIPATOR | 14

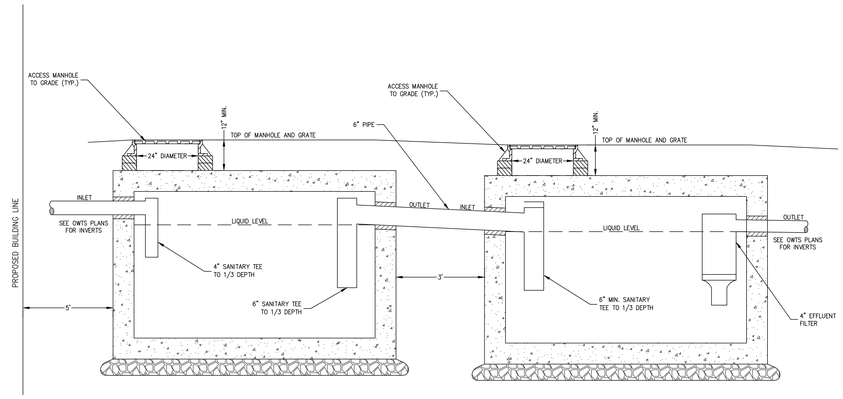

NOTES:

1. SEE DRAWING NUMBER C-328, DETAIL NO. 4 FOR SEPTIC TANK DETAILS.

SEPTIC TANK IN SERIES | 15

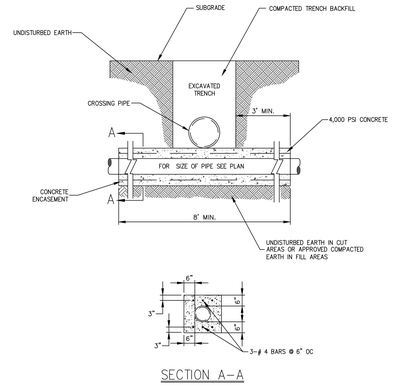

NOTE:

1. FULL LENGTH OF PIPE TO BE USED AT CROSSING PIPE TO BE CENTERED ON CENTERLINE OF CROSSING PIPE. NO JOINTS SHALL BE LOCATED WITHIN THE AREA OF CONCRETE ENCASEMENT.

CONCRETE ENCASEMENT (<18" SEPARATION) | 16

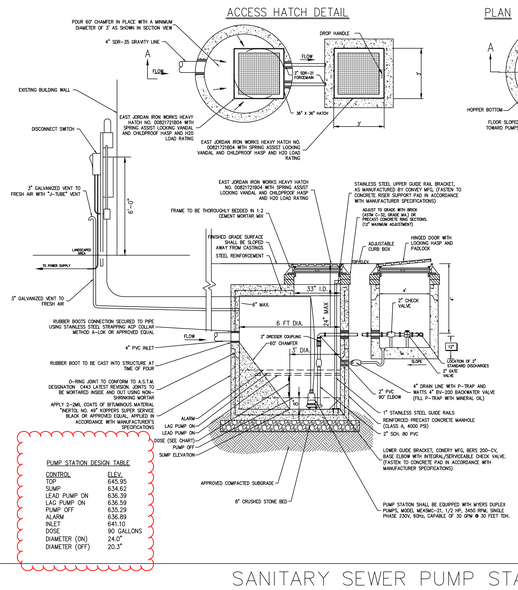

PUMP STATION DESIGN TABLE

CONTROL	ELEV.
TOP	645.95
SUMP	634.62
LEAD PUMP ON	636.39
LAG PUMP ON	636.59
PUMP OFF	635.29
ALARM	636.89
INLET	641.10
DOSE	90 GALLONS
DIAMETER (ON)	24.0"
DIAMETER (OFF)	20.3"

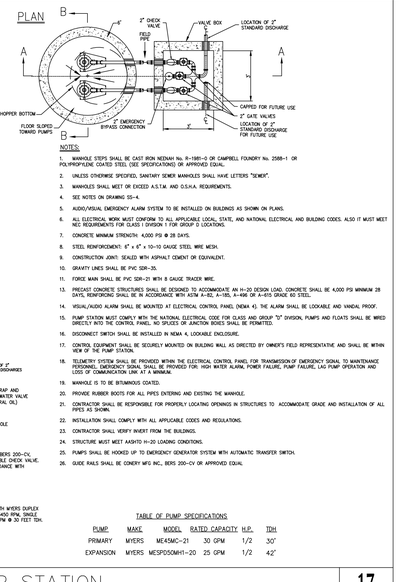

NOTES:

1. MANHOLE STEPS SHALL BE CAST IRON MEDIAN No. R-1981-D OR CAMPBELL FOUNDRY No. 2588-1 OR POLYPROPYLENE COATED STEEL (SEE SPECIFICATIONS) OR APPROVED EQUAL.
2. UNLESS OTHERWISE SPECIFIED, SANITARY SEWER MANHOLES SHALL HAVE LETTERS "SEWER".
3. MANHOLES SHALL MEET OR EXCEED A.S.T.M. AND O.S.H.A. REQUIREMENTS.
4. SEE NOTES ON DRAWING SS-4.
5. AUDIO/VISUAL EMERGENCY ALARM SYSTEM TO BE INSTALLED ON BUILDINGS AS SHOWN ON PLANS.
6. ALL ELECTRICAL WORK MUST CONFORM TO ALL APPLICABLE LOCAL, STATE, AND NATIONAL ELECTRICAL AND BUILDING CODES. ALSO IT MUST MEET NEC REQUIREMENTS FOR CLASS I DIVISION 1 FOR GROUP D LOCATIONS.
7. CONCRETE MINIMUM STRENGTH: 4,000 PSI @ 28 DAYS.
8. STEEL REINFORCEMENT: 6" x 6" x 10-10 GAUGE STEEL WIRE MESH.
9. CONSTRUCTION JOINT: SEALED WITH ASPHALT CEMENT OR EQUIVALENT.
10. GRAVITY LINES SHALL BE PVC SDR-35.
11. FORCE MAIN SHALL BE PVC SDR-21 WITH 8 GAUGE TRACER WIRE.
12. PRECAST CONCRETE STRUCTURES SHALL BE DESIGNED TO ACCOMMODATE AN H-20 DESIGN LOAD. CONCRETE SHALL BE 4,000 PSI MINIMUM 28 DAYS, REINFORCING SHALL BE IN ACCORDANCE WITH ASTM A-82, A-185, A-496 OR A-615 GRADE 60 STEEL.
13. VISUAL/AUDIO ALARM SHALL BE MOUNTED AT ELECTRICAL CONTROL PANEL (NEMA 4). THE ALARM SHALL BE LOCKABLE AND VANDAL PROOF.
14. PUMP STATION MUST COMPLY WITH THE NATIONAL ELECTRICAL CODE FOR CLASS AND GROUP "D" DIVISION. PUMPS AND FLOATS SHALL BE WIRED DIRECTLY INTO THE CONTROL PANEL. NO SPLICES OR JUNCTION BOXES SHALL BE PERMITTED.
15. DISCONNECT SWITCH SHALL BE INSTALLED IN NEMA 4, LOCKABLE ENCLOSURE.
16. CONTROL EQUIPMENT SHALL BE SECURELY MOUNTED ON BUILDING WALL AS DIRECTED BY OWNER'S FIELD REPRESENTATIVE AND SHALL BE WITHIN VIEW OF THE PUMP STATION.
17. TELEMETRY SYSTEM SHALL BE PROVIDED WITHIN THE ELECTRICAL CONTROL PANEL FOR TRANSMISSION OF EMERGENCY SIGNAL TO MAINTENANCE PERSONNEL. EMERGENCY SIGNAL SHALL BE PROVIDED FOR: HIGH WATER ALARM, POWER FAILURE, PUMP FAILURE, LAG PUMP OPERATION AND LOSS OF COMMUNICATION LINK AT A MINIMUM.
18. MANHOLE IS TO BE BITUMINOUS COATED.
20. PROVIDE RUBBER BOOTS FOR ALL PIPES ENTERING AND EXISTING THE MANHOLE.
21. CONTRACTOR SHALL BE RESPONSIBLE FOR PROPERLY LOCATING OPENINGS IN STRUCTURES TO ACCOMMODATE GRADE AND INSTALLATION OF ALL PIPES AS SHOWN.
22. INSTALLATION SHALL COMPLY WITH ALL APPLICABLE CODES AND REGULATIONS.
23. CONTRACTOR SHALL VERIFY INVERT FROM THE BUILDINGS.
24. STRUCTURE MUST MEET AASHTO H-20 LOADING CONDITIONS.
25. PUMPS SHALL BE HOOKED UP TO EMERGENCY GENERATOR SYSTEM WITH AUTOMATIC TRANSFER SWITCH.
26. GUIDE RAILS SHALL BE CONERY MFG INC., BERS 200-CU OR APPROVED EQUAL

TABLE OF PUMP SPECIFICATIONS

PUMP	MAKE	MODEL	RATED CAPACITY	H.P.	TDH
PRIMARY	MYERS	ME4SMC-21	30 GPM	1/2	30'
EXPANSION	MYERS	MESP050MH1-20	25 GPM	1/2	42'

SANITARY SEWER PUMP STATION | 17

Revisions		
05/03/2023	REVISED PER RFI 34	9
03/06/2023	REVISED BUILDING B STORM ROOF LEADERS	8
02/10/2023	REV. NEW LOT LINE / SITE GRADING & STORM	7
12/30/2022	REV. BUILDING A UTILITIES	6
12/16/2022	REV. PER WATERSHED INSPECTOR GENERAL COMMENTS	5
Date	Description	No.

WARNING: IT IS A VIOLATION OF THE NYS EDUCATION LAW ARTICLE 145 FOR ANY PERSON, UNLESS HE IS ACTING UNDER THE DIRECTION OF A LICENSED PROFESSIONAL ENGINEER, LAND SURVEYOR OR GEOLOGIST, TO ALTER THIS ITEM IN ANY WAY.

STATE OF NEW YORK · MICHAEL J. FINNEGAN · 081473 · LICENSED PROFESSIONAL ENGINEER
05/03/2023
Date
Signature
MICHAEL J. FINNEGAN, PE, LEED-AP
PROFESSIONAL ENGINEER NY Lic. No. 081473-1

LANGAN
Langan Engineering, Environmental, Surveying, Landscape Architecture, and Geology, D.P.C.
One North Broadway, Suite 910
White Plains, NY 10601
T: 914.323.7400 F: 914.323.7401 www.langan.com

Project: LINCOLN LOGISTICS BREWSTER
TOWN OF SOUTHEAST
PUTNAM COUNTY NEW YORK

Drawing Title: OWTS DETAILS (2 OF 2)

Project No. 190065201
Date 1/28/2022
Drawn By JM/SK
Checked By CZ/MF

Drawing No. C-329
Sheet 48 of 96

© 2020 Langan