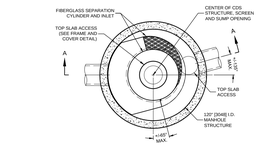

PLAN VIEW B-B
N.T.S.

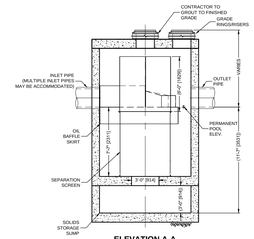

ELEVATION A-A
N.T.S.

GENERAL NOTES
1. CONTECH TO PROVIDE ALL MATERIALS UNLESS NOTED OTHERWISE.
2. DIMENSIONS MARKED WITH ( ) ARE REFERENCE DIMENSIONS. ACTUAL DIMENSIONS MAY VARY.
3. FOR FABRICATION DRAWINGS WITH DETAILED STRUCTURE DIMENSIONS AND WEIGHTS, PLEASE CONTACT YOUR CONTECH ENGINEERED SOLUTIONS LLC REPRESENTATIVE. www.contechES.com
4. CDS WATER QUALITY STRUCTURE SHALL BE IN ACCORDANCE WITH ALL DESIGN DATA AND INSTALLATION INSTRUCTIONS WRITTEN.
5. STRUCTURE SHALL MEET AASHTO HS20 AND CASTINGS SHALL MEET HS20 (AASHTO M 306) LOAD RATING, ASSUMING GROUNDWATER ELEVATION AT, OR BELOW, THE OUTLET PIPE INVERT ELEVATION. ENGINEER OF RECORD TO CONFIRM ACTUAL GROUNDWATER ELEVATION.
6. PVC HYDRAULIC SHEAR PLATE IS PLACED ON SHELF AT BOTTOM OF SCREEN CYLINDER. REMOVE AND REPLACE AS NECESSARY DURING MAINTENANCE CLEANING.

INSTALLATION NOTES
A. ANY SUB-BASE, BACKFILL DEPTH, AND/OR ANTI-FLOTATION PROVISIONS ARE SITE-SPECIFIC DESIGN CONSIDERATIONS AND SHALL BE SPECIFIED BY ENGINEER OF RECORD.
B. CONTRACTOR TO PROVIDE EQUIPMENT WITH SUFFICIENT LIFTING AND REACH CAPACITY TO LIFT AND SET THE CDS MANHOLE STRUCTURE (LIFTING CLUTCHES PROVIDED).
C. CONTRACTOR TO ADD JOINT SEALANT BETWEEN ALL STRUCTURE SECTIONS, AND ASSEMBLE STRUCTURE.
D. CONTRACTOR TO PROVIDE, INSTALL, AND GROUT PIPES. MATCH PIPE INVERTS WITH ELEVATIONS SHOWN.
E. CONTRACTOR TO TAKE APPROPRIATE MEASURES TO ASSURE UNIT IS WATER TIGHT, HOLDING WATER TO PIPE INVERT MINIMUM. IT IS SUGGESTED THAT ALL JOINTS BELOW PIPE INVERTS ARE GROUTED.

CONTECH ENGINEERED SOLUTIONS LLC
9025 Centre Pointe Dr., Suite 400 West Chester, OH 45069
800.338.1122 513.645.7000 513.645.7993 fax

CDS5668-10-C
INLINE CDS
STANDARD DETAIL

WATER QUALITY CONTROL STRUCTURE CONTECH CDS5668-10-C
(WQS A-13, WQS E-8-1)

99

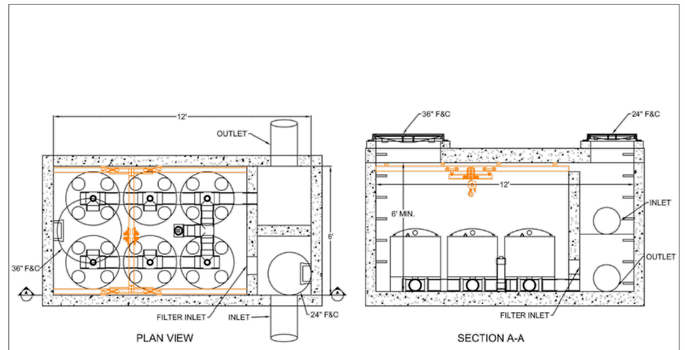

BAYSAVER TECHNOLOGIES
1030 Deer Hollow Drive Mount Airy, MD 21771
1-800-BAYSAVER 1-800-229-7283

ADS ADVANCED DRAINAGE SYSTEMS, INC.
4640 TRUEMAN BLVD HILLIARD, OH 43026
1-800-733-7473

THE BAYFILTER STORMWATER MANAGEMENT SYSTEM IS A STORMWATER FILTRATION DEVICE DESIGNED TO REMOVE FINE SEDIMENTS, HEAVY METALS, AND PHOSPORUS. THE BAYFILTER STORMWATER MANAGEMENT SYSTEM PROVIDES 4 SQUARE FEET WITH APPROXIMATELY 16 SQUARE FEET OF FILTRATION AREA. THE FILTER CARTRIDGES ARE HOUSED IN A CONCRETE STRUCTURE THAT EVENLY DISTRIBUTES THE FLOW BETWEEN CARTRIDGES. THE SYSTEM IS INLINE WITH AN INTERNAL BYPASS WEIR THAT ROUTES HIGH INTENSITY STORMS AROUND THE CARTRIDGES. THE FILTER CARTRIDGES REMOVE POLLUTANTS FROM RUNOFF BY FILTRATION (INTERCEPTION/ATTACHMENT) AND ADSORPTION.

FLOW RATE	0.60 CFS
CARTRIDGE TYPE	545
QTY. CARTRIDGES	8
SEDIMENT CAPACITY	210LBS
DATE	9/28/18
DRAWN	EKH
CHECKED	PR
SCALE	N.T.S.

BAYFILTER BF 6-12-6

WATER QUALITY STRUCTURE 4C-2 BAYFILTER

100

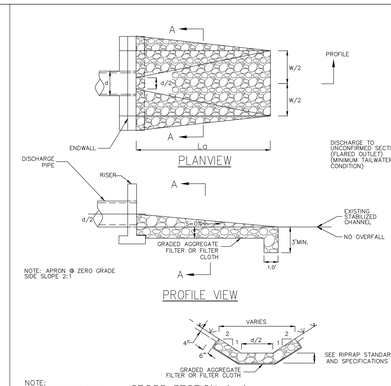

NOTE:
SEE RIPRAP STANDARDS AND SPECIFICATIONS
MINIMUM TAILWATER CONDITIONS

RIP-RAP DISSIPATOR	CAPACITY Q cfs	Lo ft	d inches	W ft	d50 inches
DET-1A-1 Outlet	15.33	14	18	15.50	6
DET-5A-1 Outlet	15.35	14	18	15.50	6
P/W-1B-1 Outlet	30.88	21	15	22.25	11
P/W-3B-1 Outlet	6.82	8	18	9.50	4
PP-5B-1 Outlet	0.47	6	12	8.00	3
N-1 (DOT ROW)	4.76	10	24	8.00	4

ROCK OUTLET PROTECTION
(MINIMUM TAILWATER CONDITIONS)

101

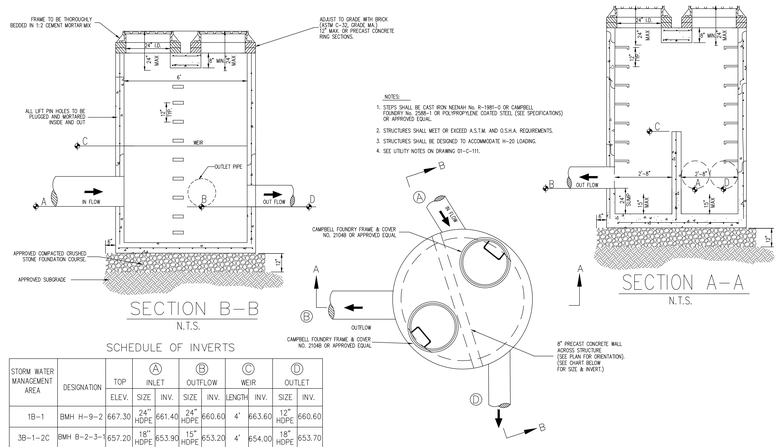

SCHEDULE OF INVERTS

STORM WATER MANAGEMENT AREA	DESIGNATION	TOP	Ⓐ INLET		Ⓑ OUTFLOW		Ⓒ WEIR		Ⓓ OUTLET	
		ELEV.	SIZE	INV.	SIZE	INV.	LENGTH	INV.	SIZE	INV.
1B-1	BMH H-9-2	667.30	24" HDPE	661.40	24" HDPE	660.60	4'	663.60	12" HDPE	660.60
3B-1-2C	BMH B-2-3-1	657.20	18" HDPE	653.90	15" HDPE	653.20	4'	654.00	18" HDPE	653.70
3B-1	BMH B-17	646.60	24" HDPE	641.60	24" HDPE	641.60	6'	645.50	30" HDPE	642.50
4A-1	BMH A-13-2	646.10	36" HDPE	630.20	24" HDPE	630.20	6'	631.80	36" HDPE	630.20

BYPASS MANHOLE
(BMH H-9-2, BMH B-2-3-1, BMH A-13-2 & BMH B-17)

102

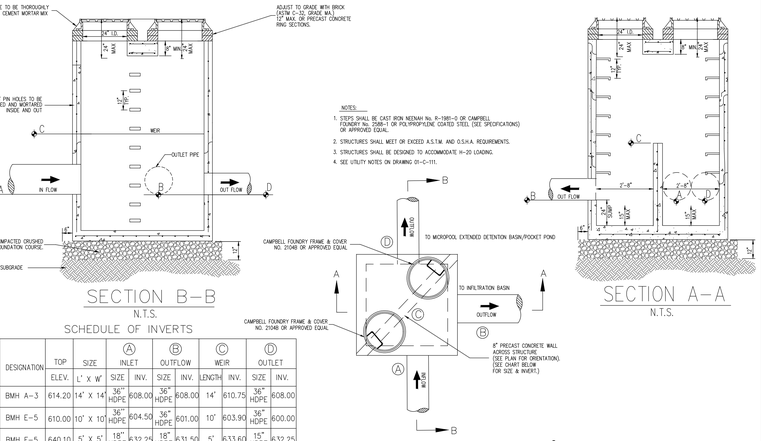

SCHEDULE OF INVERTS

STORM WATER MANAGEMENT AREA	DESIGNATION	TOP	SIZE	Ⓐ INLET		Ⓑ OUTFLOW		Ⓒ WEIR		Ⓓ OUTLET	
		ELEV.	L' X W'	SIZE	INV.	SIZE	INV.	LENGTH	INV.	SIZE	INV.
4A-1	BMH A-3	614.20	14' X 14'	36" HDPE	608.00	36" HDPE	608.00	14'	610.75	36" HDPE	608.00
5A-1	BMH E-5	610.00	10' X 10'	36" HDPE	604.50	36" HDPE	601.00	10'	603.90	36" HDPE	600.00
5B-1	BMH F-5	640.10	5' X 5'	18" HDPE	632.25	18" HDPE	631.50	5'	633.60	15" HDPE	632.25
IB 1A-1	BMH G-4	632.40	8' X 8"	18" HDPE	625.00	15" HDPE	625.00	8'	627.10	36" HDPE	625.00
1B-3	BMH O-2	665.40	5' X 5'	24" HDPE	655.50	24" HDPE	655.5	5'	658.00	30" HDPE	655.50
				30" HDPE	655.50						

BYPASS MANHOLE
(BMH A-3, BMH E-5, BMH F-5, BMH G-4 & BMH O-2)

103

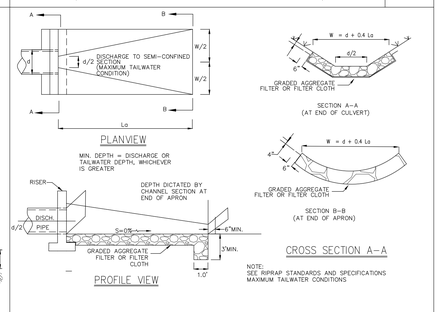

NOTE:
SEE RIPRAP STANDARDS AND SPECIFICATIONS
MAXIMUM TAILWATER CONDITIONS

RIP-RAP DISSIPATOR	CAPACITY Q cfs	Lo ft	d inches	W ft	d50 inches
IB-1A-1 Inlet	11.96	26	15	11.65	4
DET-1A-1 Inlet	15.21	14	36	8.60	3
IB-4A-1 Inlet	40.54	13	36	8.20	3
DET-4A-1 Inlet	51.73	13	36	8.20	3
IB-5A-1 Inlet	70.97	49	30	22.10	8
DET-5A-1 Inlet	66.61	24	36	12.60	4
IB-1B-3 Inlet	10.94	10	18	5.50	2
DET-1B-1 Inlet	111.45	76	30	32.9	14
DET-3B-1 Inlet	44.10	13	36	8.20	3
BIO-3B Inlet	2.59	6	15	3.65	2
PP-5B-1 Inlet	11.15	11	18	5.90	3
IB-5B-1 Inlet	12.07	34	12	16.60	6

ROCK OUTLET PROTECTION
(MAXIMUM TAILWATER CONDITIONS)

104

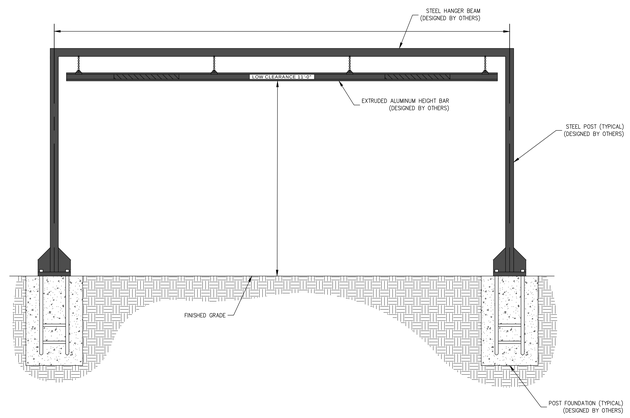

FIELDS CORNER ROAD CLEARANCE BAR – ±40' NORTH OF BARRETT ROAD
(DESIGNED BY OTHERS)

105

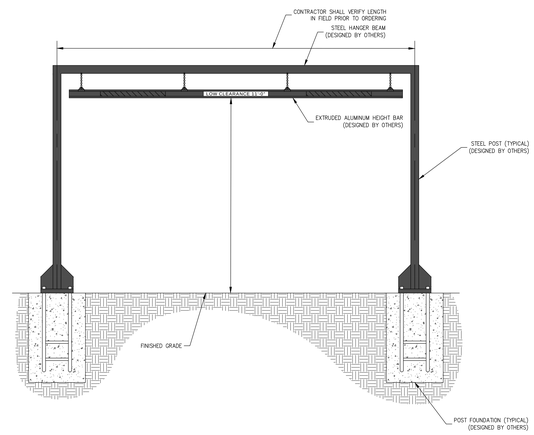

FIELDS CORNER ROAD CLEARANCE BAR – ±950' SOUTH OF TOWNLINE
(DESIGNED BY OTHERS)

106

POND No.	BOTTOM OF POND ELEVATION	SURFACE AREA REQ'D	SURFACE AREA PROV'D	TOP BERM ELEV.	OVERFLOW (RIPRAP) ELEV.	MULCH B	PLANTING SOIL C	GRAVEL D
		S.F.	S.F.	FT.	FT.	in.	in.	in.
3B-1-2C	653.0	7,250	7,260	654.0	653.5	3"	30"	12"
3B-1-2C	658.0	2,140	2,210	660.0	658.5	3"	30"	12"
4A-2-5	591.0	10,510	10,610	592.0	591.5	3"	18"	12"
4A-2-6	556.5	2,140	2,530	558.0	557.4	3"	18"	12"

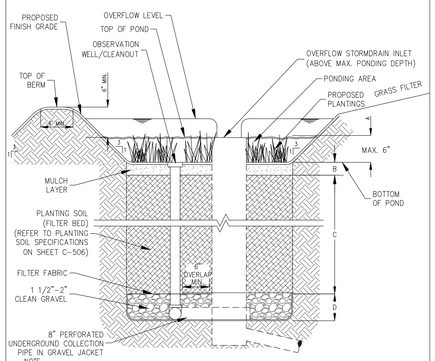

NOTE
1. THE OVERFLOW INLET IS NOT REQUIRED FOR BIORETENTION AREA 4D.
2. SEE PLAN FOR ELEVATIONS OF BIORETENTION AREA 4D.
3. BIORETENTION MATERIALS TO BE AS SPECIFIED IN NYSDOT ITEM 208.0103 22 BIORETENTION AND DRY SWALE SOIL.
4. RIP RAP SHALL BE PLACED AT THE INLET OF EACH BIORETENTION AREA.

BIORETENTION FACILITY

107

Date	Description	No.
12/16/2022	REV. PER WATERSHED INSPECTOR GENERAL COMMENTS	5
12/05/2022	REV. SITE GRADING	4
10/14/2022	REV. FOR NYCDEP SUBMISSION	3
03/25/2022	REV. PER TOWN COMMENTS	2

Revisions

WARNING: IT IS A VIOLATION OF THE NYS EDUCATION LAW ARTICLE 145 FOR ANY PERSON, UNLESS HE IS ACTING UNDER THE DIRECTION OF A LICENSED PROFESSIONAL ENGINEER, LAND SURVEYOR OR GEOLOGIST, TO ALTER THIS ITEM IN ANY WAY.

STATE OF NEW YORK · MICHAEL S. PIKAN · 081473 · LICENSED PROFESSIONAL ENGINEER

Sign 12/16/2022 Date

MICHAEL S. PIKAN, PE, LEED-AP
PROFESSIONAL ENGINEER NY Lic. No. 081473

LANGAN
Langan Engineering, Environmental, Surveying, Landscape Architecture, and Geology, D.P.C.
One North Broadway, Suite 910
White Plains, NY 10601
T: 914.323.7400 F: 914.323.7401 www.langan.com

Project
LINCOLN LOGISTICS BREWSTER
TOWN OF SOUTHEAST
PUTNAM COUNTY NEW YORK

Drawing Title
DETAIL SHEET (9 OF 11)

Project No. 190065201
Date 1/28/2022
Drawn By JMSK
Checked By CZ/MF

Drawing No. C-908
Sheet 95 of 97

LANGAN
Project No. 190065201

© 2020 Langan

Date: 12/16/2022 Time: 13:09 User: jmacalintal Style Table: Langan.stb Layout: CS505 Document Code: 190065201-0501-CS501-0108