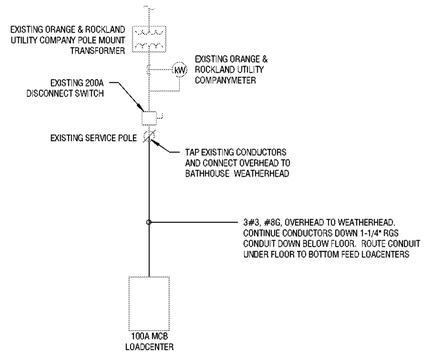

1 E700 POWER ONE-LINE DIAGRAM - BATHHOUSE #231
NOT TO SCALE

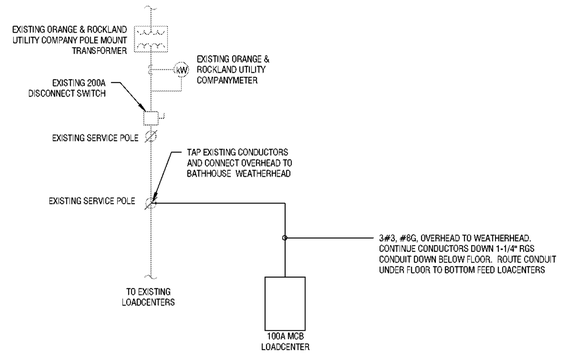

2 E700 POWER ONE-LINE DIAGRAM -BATHHOUSE #322
1/8" = 1'-0"

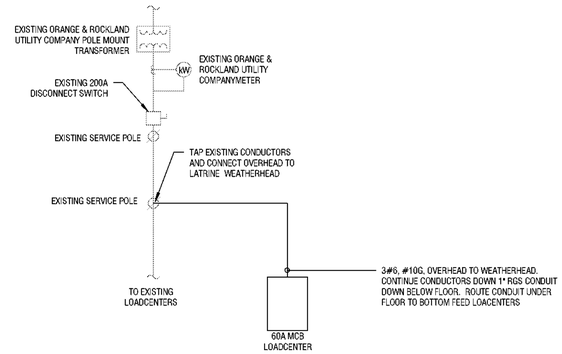

3 E700 POWER ONE-LINE DIAGRAM - LATRINE
1/8" = 1'-0"

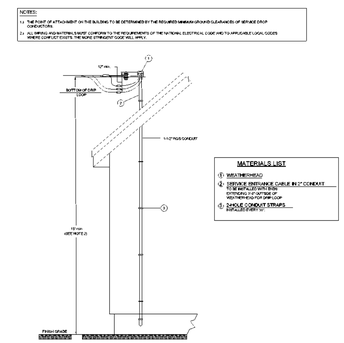

4 E700 OVERHEAD SERVICE ENTRANCE DETAIL
1/8" = 1'-0"

DESIGNATION: BATHHOUSE

LOCATION: BOYS RESTROOM #231 101
FED FROM:
SERVICE ENTRANCE LABEL:
OPTIONS:

DESIGN BASE: GE POWERMARK GOLD LOAD CENTER
DISTRIBUTION VOLTAGE: 120/240V SINGLE PHASE
 # OF PHASES: 1
 # OF WIRES: 3
MOUNTING: RECESSED
ENCLOSURE TYPE: NEMA 3R

FULLY RATED AIC: 10,000
MAIN TYPE: MCB
BUS RATING: 100 A
MCB TRIP: 100 A
MODIFICATIONS:

PANELBOARD SCHEDULE NOTATION:
* PROVIDE GFCI TYPE BREAKER
** REFER TO POWER DISTRIBUTION ONE-LINE DIAGRAM OR EQUIPMENT CONNECTION SCHEDULE(S) FOR TRIP RATING.
*** COORDINATE CIRCUIT BREAKER RATING WITH SPD MANUFACTURER

CKT	CIRCUIT DESCRIPTION	BKR	POLES	A		B		POLES	BKR	CIRCUIT DESCRIPTION	CKT
1	EF-1	20 A	1	864	455.4			1	20 A	LIGHTING	2
3	RECEPTACLES	20 A	1			360	80	1	20 A	SHOWER LIGHTING*	4
5	EWH-1	70 A	2	6150	180			1	20 A	RECEPTACLES	6
7						6150	180	1	20 A	RECEPTACLES	8
9	RP-1	20 A	1	25							10
11											12
13											14
15											16
17											18
19											20
21											22
23											24
	TOTAL CONNECTED PHASE LOADS:			7671 VA		6770 VA					
	TOTAL CONNECTED PHASE CURRENTS:			64 A		56 A					

LOAD CLASSIFICATION	CONNECTED LOAD	DEMAND FACTOR	ESTIMATED DEMAND LOAD	TOTALS	
Lighting	356 VA	100.00%	356 VA		
Motor	13189 VA	123.31%	16264 VA	CONNECTED LOAD:	14441 VA
RECEP	900 VA	100.00%	900 VA	ESTIMATED DEMAND LOAD:	17516 VA
				CONNECTED CURRENT:	60 A
				ESTIMATED DEMAND CURRENT:	73 A
				NON-COINCIDENT HEATING/COOLING:	0 A
				ESTIMATED DEMAND - NC HEAT/COOL:	73 A

DESIGNATION: LATRINE

LOCATION:
FED FROM:
SERVICE ENTRANCE LABEL:
OPTIONS:

DESIGN BASE: GE POWERMARK GOLD LOAD CENTER
DISTRIBUTION VOLTAGE: 120/240V SINGLE PHASE
 # OF PHASES: 1
 # OF WIRES: 3
MOUNTING: SURFACE
ENCLOSURE TYPE: NEMA 3R

FULLY RATED AIC: 10,000
MAIN TYPE: MCB
BUS RATING: 100 A
MCB TRIP: 60 A
MODIFICATIONS:

PANELBOARD SCHEDULE NOTATION:
* PROVIDE GFCI TYPE BREAKER
** REFER TO POWER DISTRIBUTION ONE-LINE DIAGRAM OR EQUIPMENT CONNECTION SCHEDULE(S) FOR TRIP RATING.
*** COORDINATE CIRCUIT BREAKER RATING WITH SPD MANUFACTURER

CKT	CIRCUIT DESCRIPTION	BKR	POLES	A		B		POLES	BKR	CIRCUIT DESCRIPTION	CKT
1	EWH-3	15 A	1	1400	1400			1	15 A	EWH-2	2
3	RECEPTACLES	20 A	1			180	330.4	1	20 A	LIGHTING	4
5	RECEPTACLES	20 A	1	180	127			1	20 A	LIGHTING	6
7											8
9											10
11											12
13											14
15											16
17											18
19											20
21											22
23											24
	TOTAL CONNECTED PHASE LOADS:			3103 VA		510 VA					
	TOTAL CONNECTED PHASE CURRENTS:			26 A		4 A					

LOAD CLASSIFICATION	CONNECTED LOAD	DEMAND FACTOR	ESTIMATED DEMAND LOAD	TOTALS	
Lighting	279 VA	100.00%	279 VA		
Motor	2800 VA	112.50%	3150 VA	CONNECTED LOAD:	3612 VA
RECEP	540 VA	100.00%	540 VA	ESTIMATED DEMAND LOAD:	3962 VA
				CONNECTED CURRENT:	15 A
				ESTIMATED DEMAND CURRENT:	17 A
				NON-COINCIDENT HEATING/COOLING:	0 A
				ESTIMATED DEMAND - NC HEAT/COOL:	17 A

New York State Parks, Recreation and Historic Preservation
Governor Kathy Hochul — Commissioner Erik Kulleseid

IT IS A VIOLATION OF STATE EDUCATION LAW FOR ANY PERSON, UNLESS UNDER THE DIRECTION OF A LICENSED ARCHITECT/ENGINEER TO ALTER THIS DOCUMENT IN ANYWAY. ALTERATIONS MUST HAVE THE SEAL AFFIXED ALONG WITH A DESCRIPTION OF THE ALTERATIONS, DATE AND ARCHITECTS/ENGINEER'S SIGNATURE. COPYRIGHT © 2023

ARCHITECT:
Saratoga Associates
21 Congress Street, Suite 201
Saratoga Springs, NY 12866
SARATOGA ASSOCIATES
Landscape Architects, Architects, Engineers, and Planners, P.C.

SURVEYOR/STRUCTURAL/ MEP ENGINEER:
LaBella Associates
300 State Street, Suite 201
Rochester, NY 14614
LaBella ASSOCIATES

Certificate of Authorization Number:
Professional Engineering: 018281
Land Surveying: 017976
Geological: 018750

Palisades Region
Palisades Interstate Park Commission
Bear Mountain, New York 10911
(845) 786-2701
Executive Director: Joshua Laird

Project Title:
CAMP JUNIOR ON LAKE TIORATI - PHASE 3

Project Location:
HARRIMAN STATE PARK

Key Plan

REVISIONS

Rev No	Description	Date

Drawn By: JJS
Design By: JJS
Checked By: NCH
Approved By: NCH
Date: 3/16/23

Seal and Signature

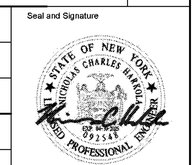

Sheet Title:
PARTIAL ONE-LINE DIAGRAM AND SCHEDULES

Bid Documents

Drawing Number:
E700

Project Number: 21059.23
Sheet:

3/30/2023 8:46:14 AM