SUPPLY AIR VAV BOX SCHEDULE

1. UNITS SHALL UTILIZE PRESSURE INDEPENDENT CONTROLS, BE FURNISHED WITH 24-VOLT POWER CONNECTIONS AND BOTTOM MOUNTED ACCESS DOORS. HEATING COIL CFM BASED ON MAX AIRFLOW AMOUNT.
2. PROVIDE WITH 3-FOOT LONG DISCHARGE ATTENUATOR AT OUTLET OF VAV BOX.

Mark	OULET SIZE	INLET SIZE DIAMETER	TYPE	SERVICE	DIFFERENTIAL PRESSURE DROP (IN WC)	MINIMUM OPERATING PRESSURE DROP	AIR FLOW (CFM) MAX	AIR FLOW (CFM) MIN	REHEAT COIL DATA (40% PROPYLENE GLYCOL SOLUTION) EAT	LAT	APD	MBH	EWT	LWT	GPM	ROWS	WPD (FT)	BASIS OF DESIGN MANUFACTURER AND MODEL NUMBER	REMARKS
VAV-HS-1	12x10	8"	SINGLE DUCT TERMINAL UNIT WITH REHEAT COIL	CORRIDOR/GALLERY	0.35	0.32 in-wg	495	155	64 °F	85.0 °F	0.15	11.3	180 °F	160.8 °F	1.21	1	1.31	Price Industries	1
VAV-HS-2	20x17.5	14"	SINGLE DUCT TERMINAL UNIT WITH REHEAT COIL	SCIENCE CLASSROOM 231	0.20	0.31 in-wg	1,550	998	64 °F	85.0 °F	0.30	35.0	180 °F	125.7 °F	1.33	2	0.29	Price Industries	1
VAV-HS-3	12x8	4"	SINGLE DUCT TERMINAL UNIT WITH REHEAT COIL	STUDY POD 231A	0.52	0.02 in-wg	90	50	64 °F	85.0 °F	0.01	2.2	180 °F	147.0 °F	0.13	1	0.03	Price Industries	1
VAV-HS-4	12x10	7"	SINGLE DUCT TERMINAL UNIT WITH REHEAT COIL	PREP ROOM 231B	0.44	0.09 in-wg	340	143	64 °F	85.0 °F	0.06	7.8	180 °F	160.2 °F	0.80	1	0.63	Price Industries	1
VAV-HS-5	20x17.5	14"	SINGLE DUCT TERMINAL UNIT WITH REHEAT COIL	SCIENCE CLASSROOM 230	0.35	0.26 in-wg	1,405	988	64 °F	85.0 °F	0.25	31.8	180 °F	123.7 °F	1.16	2	0.17	Price Industries	1
VAV-HS-6	12x8	4"	SINGLE DUCT TERMINAL UNIT WITH REHEAT COIL	STUDY POD 230A	0.52	0.02 in-wg	85	50	64 °F	85.0 °F	0.01	2.2	180 °F	147.0 °F	0.13	1	0.03	Price Industries	1
VAV-HS-7	12x10	7"	SINGLE DUCT TERMINAL UNIT WITH REHEAT COIL	PREP ROOM 230B	0.44	0.09 in-wg	340	143	64 °F	85.0 °F	0.06	7.8	180 °F	160.2 °F	0.80	1	0.63	Price Industries	1
VAV-HS-8	20x17.5	14"	SINGLE DUCT TERMINAL UNIT WITH REHEAT COIL	SCIENCE CLASSROOM 233	0.49	0.27 in-wg	1,440	822	64 °F	85.0 °F	0.26	32.6	180 °F	124.3 °F	1.21	2	0.24	Price Industries	1
VAV-HS-9	20x17.5	14"	SINGLE DUCT TERMINAL UNIT WITH REHEAT COIL	SCIENCE CLASSROOM 232	0.50	0.26 in-wg	1,385	1,007	64 °F	85.0 °F	0.25	31.4	180 °F	123.6 °F	1.15	2	0.16	Price Industries	1
VAV-HS-10	12x8	4"	SINGLE DUCT TERMINAL UNIT WITH REHEAT COIL	STUDY POD 232A	0.52	0.02 in-wg	85	50	64 °F	85.0 °F	0.01	2.2	180 °F	147.0 °F	0.13	1	0.03	Price Industries	1
VAV-HS-11	12x10	7"	SINGLE DUCT TERMINAL UNIT WITH REHEAT COIL	PREP ROOM 234A	0.49	0.09 in-wg	350	143	64 °F	85.0 °F	0.06	8.0	180 °F	160.5 °F	0.85	1	0.69	Price Industries	1
VAV-HS-12	20x17.5	14"	SINGLE DUCT TERMINAL UNIT WITH REHEAT COIL	SCIENCE CLASSROOM 235	0.41	0.35 in-wg	1,690	1,131	64 °F	85.0 °F	0.34	38.3	180 °F	127.7 °F	1.51	2	0.36	Price Industries	1
VAV-HS-13	20x17.5	14"	SINGLE DUCT TERMINAL UNIT WITH REHEAT COIL	SCIENCE CLASSROOM 234	0.50	0.26 in-wg	1,385	993	64 °F	85.0 °F	0.25	31.4	180 °F	123.6 °F	1.15	2	0.16	Price Industries	1
VAV-HS-14	12x8	4"	SINGLE DUCT TERMINAL UNIT WITH REHEAT COIL	STUDY POD 235C	0.49	0.02 in-wg	105	45	64 °F	85.0 °F	0.01	2.4	180 °F	147.6 °F	0.15	1	0.03	Price Industries	1
VAV-HS-15	12x10	7"	SINGLE DUCT TERMINAL UNIT WITH REHEAT COIL	PREP ROOM 235D	0.67	0.12 in-wg	415	162	64 °F	85.0 °F	0.08	9.5	180 °F	162.6 °F	1.11	1	1.14	Price Industries	1
VAV-HS-16	12x8	5"	SINGLE DUCT TERMINAL UNIT WITH REHEAT COIL	STUDY LOUNGE W207A	0.48	0.03 in-wg	140	60	64 °F	85.0 °F	0.02	3.2	180 °F	136.0 °F	0.15	1	0.02	Price Industries	1

DIFFUSER, REGISTER AND GRILLE SCHEDULE

1. PROVIDE WITH STEEL OPPOSED BLADE DAMPER
2. PROVIDE WITH 2" HIGH BASE AND DUCT COVER TO MATCH DIFFUSER MATERIAL BETWEEN TOP OF DIFFUSER AND UNDERSIDE OF FINISHING CEILING SYSTEM TO CONCEAL DUCT DROP.
3. ADD ALTERNATE #2

Mark	DESCRIPTION/PATTERN	OVERALL SIZE	DUCT CONNECTION SIZE	MOUNTING	MATERIAL	BASIS OF DESIGN MANUFACTURER AND MODEL	REMARKS
ER-HS-1	0° DEFLECTION AND 3/4 IN. BLADE SPACING		16"x16"	SURFACE	STEEL	PRICE 530	
ER-HS-2	0° DEFLECTION AND 3/4 IN. BLADE SPACING		10"x10"	SURFACE	STEEL	PRICE 530	
ER-HS-3	0° DEFLECTION AND 3/4 IN. BLADE SPACING		12"x12"	SURFACE	STEEL	PRICE 530	
SD-HS-1	1 WAY LAY-IN DIFFUSER WITH HEAT-COOL CHANGEOVER	24"x48"	24"x6"	LAY-IN	STEEL	PRICE DF1L-HC	
SD-HS-2	QUARTER ROUND HORIZONTAL DISPLACEMENT DIFFUSER	30"x60"x8"		CEILING	STEEL	PRICE DR90H	
SD-HS-3	1 WAY LAY-IN DIFFUSER WITH HEAT-COOL CHANGEOVER	24"x24"	12"x6"	LAY-IN	STEEL	PRICE DF1L-HC	
SD-HS-4	QUARTER ROUND HORIZONTAL DISPLACEMENT DIFFUSER	24"x48"x6"		CEILING	STEEL	PRICE DR90H	
SD-HS-5	1 WAY RECTANGULAR EXPOSED DISPLACEMENT DIFFUSER	24"x60"x13"	10"ø	FLOOR	STEEL	PRICE DF1	2
SD-HS-6	1 WAY RECTANGULAR EXPOSED DISPLACEMENT DIFFUSER	36"x60"x13"	10"ø	FLOOR	STEEL	PRICE DF1	2
TG-HS-1	0° DEFLECTION AND 3/4 IN. BLADE SPACING		6"x12"	SURFACE	STEEL	PRICE 530	3

EXHAUST AIR VAV BOX SCHEDULE

1. UNITS SHALL UTILIZE PRESSURE INDEPENDENT CONTROLS, BE FURNISHED WITH 24-VOLT POWER CONNECTIONS AND BOTTOM MOUNTED ACCESS DOORS.
2. PROVIDE WITH 3-FOOT LONG DISCHARGE ATTENUATOR AT OUTLET OF VAV BOX.

Mark	SIZE DIAMETER	TYPE	SERVICE	DIFFERENTIAL PRESSURE DROP (IN WC)	AIR FLOW (CFM) MAX	AIR FLOW (CFM) MIN	BASIS OF DESIGN MANUFACTURER AND MODEL NUMBER	REMARKS
EVAV-HS-1	12	QUIET EXHAUST SINGLE DUCT TERMINAL UNIT	SCIENCE CLASSROOM 230	0.16	1,405	1,040	E.H. Price SDE SERIES	1, 2
EVAV-HS-2	12	QUIET EXHAUST SINGLE DUCT TERMINAL UNIT	SCIENCE CLASSROOM 231	0.19	1,550	1,050	E.H. Price SDE SERIES	1, 2
EVAV-HS-3	7	QUIET EXHAUST SINGLE DUCT TERMINAL UNIT	PREP ROOM 231B	0.15	340	150	E.H. Price SDE SERIES	1, 2
EVAV-HS-4	4	QUIET EXHAUST SINGLE DUCT TERMINAL UNIT	STUDY POD 231A	0.15	90	50	E.H. Price SDE SERIES	1, 2
EVAV-HS-5	12	QUIET EXHAUST SINGLE DUCT TERMINAL UNIT	SCIENCE CLASSROOM 233	0.15	1,385	1,060	E.H. Price SDE SERIES	1, 2
EVAV-HS-6	12	QUIET EXHAUST SINGLE DUCT TERMINAL UNIT	SCIENCE CLASSROOM 235	0.20	1,690	1,190	E.H. Price SDE SERIES	1, 2
EVAV-HS-7	4	QUIET EXHAUST SINGLE DUCT TERMINAL UNIT	STUDY POD 235C	0.15	105	45	E.H. Price SDE SERIES	1, 2
EVAV-HS-8	7	QUIET EXHAUST SINGLE DUCT TERMINAL UNIT	PREP ROOM 235D	0.20	415	170	E.H. Price SDE SERIES	1, 2
EVAV-HS-9	7	QUIET EXHAUST SINGLE DUCT TERMINAL UNIT	PREP ROOM 230B	0.15	340	150	E.H. Price SDE SERIES	1, 2
EVAV-HS-10	4	QUIET EXHAUST SINGLE DUCT TERMINAL UNIT	STUDY POD 230A	0.15	85	50	E.H. Price SDE SERIES	1, 2
EVAV-HS-11	12	QUIET EXHAUST SINGLE DUCT TERMINAL UNIT	SCIENCE CLASSROOM 232	0.15	1,385	1,060	E.H. Price SDE SERIES	1, 2
EVAV-HS-12	7	QUIET EXHAUST SINGLE DUCT TERMINAL UNIT	PREP ROOM 234A	0.15	350	150	E.H. Price SDE SERIES	1, 2
EVAV-HS-13	4	QUIET EXHAUST SINGLE DUCT TERMINAL UNIT	STUDY POD 232A	0.15	85	50	E.H. Price SDE SERIES	1, 2
EVAV-HS-14	12	QUIET EXHAUST SINGLE DUCT TERMINAL UNIT	SCIENCE CLASSROOM 234	0.15	1,385	1,045	E.H. Price SDE SERIES	1, 2

MULTI-ZONE INVERTER HEAT PUMP SCHEDULE

1.PROVIDE HEAT PUMP WITH MITUSBISHI MODEL QSMS1801M 18" HIGH STAND AND PROVIDE ACCESSORIES TO INTEGRATE EACH FAN COIL UNITS INTO BACNET DDC SYSTEM (MITSUBISHI PAC-UKPRC001-CN-1). PROVIDE ONE MITSUBISHI PAC-UKPRC001-CN-1 FOR EACH FAN COIL UNIT, POWERED FROM THE FAN COIL UNIT, WHICH ALLOWS FOR BUILDING DDC SYSTEM TO CONTROL THE INDOOR UNIT.
2.PROVIDE EACH INDOOR UNIT WITH BUILT-IN CONDENSATE DRAIN LIFT MECHANISM (33"), BACNET AND MODBUS INTERFACE, AND WIRED CONTROLLER (MITSUBISHI MODEL PAR-40MAAU).
3.PROVIDE POWER CONNECTION AND ALL REQUIRED WIRING FOR INDOOR UNIT FROM OUTDOOR UNIT POWER SOURCE. PROVIDE ALL REQUIRED CONTROL WIRING PER MANUFACTURER'S INSTALLATION INSTRUCTIONS BETWEEN OUTDOOR UNIT, INDOOR UNITS AND WIRED CONTROLLERS.

Mark	SERVICE	DESCRIPTION	COOLING CAPACITY	CAPACITY COOLING MIN	CAPACITY HEATING (@8 DEGREES F DB)	CFM HI	CFM MID	CFM LO	ELECTRICAL DATA VOLTS	PHASE	HERTZ	MCA	FAN MOTOR OUTPUT	WEIGHT	BASIS OF DESIGN MFG. AND MODEL
FCU-HS-1	OFFICE E137B	2'x2' 4-WAY CEILING CASSETTE	8,984 Btu/h	4,800 Btu/h	10,152 Btu/h	300	265	230	208 V	1	60 Hz	0.25 A	50 W	31 lb	MITSUBISHI SLZ-KF09NA
FCU-HS-2	SECURE VESTIBULE E137A	2'x2' 4-WAY CEILING CASSETTE	8,984 Btu/h	4,800 Btu/h	10,152 Btu/h	300	265	230	208 V	1	60 Hz	0.25 A	50 W	31 lb	MITSUBISHI SLZ-KF09NA

Mark	COOLING OPERATING RANGE (DEGREE F DB)	HEATING OPERATING RANGE (DEGREE F WB)	CAPACITY HEATING (@ 5 DEGRESS F DB)	CAPACITY COOLING	ELECTRICAL DATA VOLTS	PH	MCA	MOP	REFRIGERANT	REFRIGERANT SEER	REFRIGERANT HSPF	WEIGHT	BASIS OF DESIGN MFG. AND MODEL	REMARKS
HP-HS-1	14-115	-13-65	22,000 Btu/h	20,000 Btu/h	208	1	29.5	40	R410A	17	9.8	187 lb	MITSUBISHI MXZ-2C20NAHZ2	1, 2, 3

FAN SCHEDULE

1.PROVIDE FAN WITH 16" HIGH ROOF CURB, ELECTRICALLY COMMUTATED MOTOR, MOTORIZED DAMPER AND 0-10 VDC CONTROL LEAD.
2.PROVIDE FAN BACKWARD INCLINED, NON-OVERLOADING WELDED ALUMINUM WHEEL, AMCA TYPE "B" SPARK RESISTANT CONSTRUCTION, HIGH VELOCITY DISCHARGE CONE, UV PROTECTION TYPE PHENOLIC EPOXY POWDER COAT FINISH, LARGE BOLTED ACCESS DOOR, FAN DRAIN, WEATHER COVER, NO BYPASS PLENUM, 12" HIGH COATED STEEL LAB EXHAUST CURB, REINFORCED CURB CAP, DESIGNED TO WITHSTAND 125 MILE PER HOUR WIND.
3. PROVIDE WITH NEMA 3R DISCONNECT MOUNTED AND PRE-WIRED.
4. ADD ALTERNATE #2

Mark	LOCATION	SERVICE	TYPE	DRIVE	CFM	STATIC PRESSURE (IN WC)	MINIMUM IMPELLER DIAMETER	UNIT HEIGHT	EFFECTIVE PLUME HEIGHT	ELECTRICAL DATA RPM	BHP	HP	WATTS	VOLTS	PH	MIN FAN STATIC EFFICIENCY	TOTAL SYSTEM WEIGHT	BASIS OF DESIGN MFG. AND MODEL	REMARKS
EF-HS-1	ROOF	FUME HOOD	CENTRIFUGAL, IN-LINE, CURB MOUNT, BACKWARD INCLINED WHEEL, LABORATORY EXHAUST UNIT	BELT	500	1	10.0 in	11.3 ft	17' - 0"	2,576	0.392	1/2		115	1	23%	431 lb	COOK 100TCNHBLE05	2, 3
EF-HS-2	ROOF	FUME HOOD	CENTRIFUGAL, IN-LINE, CURB MOUNT, BACKWARD INCLINED WHEEL, LABORATORY EXHAUST UNIT	BELT	500	1	10.0 in	11.3 ft	17' - 0"	2,576	0.392	1/2		115	1	23%	431 lb	COOK 100TCNHBLE05	2, 3
EF-HS-3	ROOF	FUME HOOD	CENTRIFUGAL, IN-LINE, CURB MOUNT, BACKWARD INCLINED WHEEL, LABORATORY EXHAUST UNIT	BELT	500	1	10.0 in	11.3 ft	17' - 0"	2,576	0.392	1/2		115	1	23%	431 lb	COOK 100TCNHBLE05	2, 3
EF-HS-4	ROOF	FUME HOOD	CENTRIFUGAL, IN-LINE, CURB MOUNT, BACKWARD INCLINED WHEEL, LABORATORY EXHAUST UNIT	BELT	500	1	10.0 in	11.3 ft	17' - 0"	2,576	0.392	1/2		115	1	23%	431 lb	COOK 100TCNHBLE05	2, 3
EF-HS-5	ROOF	FUME HOOD	CENTRIFUGAL, IN-LINE, CURB MOUNT, BACKWARD INCLINED WHEEL, LABORATORY EXHAUST UNIT	BELT	500	1	10.0 in	11.3 ft	17' - 0"	2,576	0.392	1/2		115	1	23%	431 lb	COOK 100TCNHBLE05	2, 3
EF-HS-6	ROOF	FUME HOOD	CENTRIFUGAL, IN-LINE, CURB MOUNT, BACKWARD INCLINED WHEEL, LABORATORY EXHAUST UNIT	BELT	500	1	10.0 in	11.3 ft	17' - 0"	2,576	0.392	1/2		115	1	23%	431 lb	COOK 100TCNHBLE05	2, 3
EF-HS-7	ROOF	SCIENCE CLASSROOM 208 AND PREP ROOM 208A	DOWNBLAST CENTRIFUGAL VENTILATOR, CURB MOUNT	DIRECT	1,250	0.8	12.0 in			1,639		1/2	300.0	115	1	49%		COOK 120C17DEC	1, 4
EF-HS-8	ROOF	SCIENCE CLASSROOM 212	DOWNBLAST CENTRIFUGAL VENTILATOR, CURB MOUNT	DIRECT	1,000	0.8	12.0 in			1,472		1/2	220.0	115	1	53%		COOK 120C17DEC	1, 4

RADIANT PANEL SCHEDULE

1. PRESSURE DROP DATA BASED ON FLOW RATE THROUGH PANEL OF 1.0 GPM
2. PROVIDE 1.5" THICK, 1.5 POUND PER CUBIC FOOT DENSITY, INSULATION BLANKET ON TOP EACH RADIANT PANEL WITH MINIMUM INSTALLED R-VALUE OF 4.7 TO COMPLY WITH PART C402.2.6 OF THE ENERGY CONSERVATION CONSTRUCTION CODE OF NEW YORK STATE

Mark	TYPE	HEATING CAPACITY PER FOOT OF RADIANT PANEL	GPM	SIZE LENGTH	AVERAGE 40% PROPYLENE GLYCOL SOLUTION TEMPERATURE	PRESSURE DROP (FEET OF WATER PER 100 FEET OF .505 ID TUBE)	WIDTH	NUMBER OF TUBES	BASIS OF DESIGN MFG. AND MODEL	REMARKS
RP-HS-1	RADIANT LINEAR EXTRUDED PANEL	301.0 Btu/h	1.0 GPM	6' - 0"	178 °F	4.10	18"	3	AEROTECH	1, 2
RP-HS-2	RADIANT LINEAR EXTRUDED PANEL	301.0 Btu/h	1.0 GPM	6' - 0"	178 °F	4.10	18"	3	AEROTECH	1, 2
RP-HS-3	RADIANT LINEAR EXTRUDED PANEL	301.0 Btu/h	0.8 GPM	4' - 0"	178 °F	2.40	18"	3	AEROTECH	1, 2
RP-HS-4	RADIANT LINEAR EXTRUDED PANEL	301.0 Btu/h	0.8 GPM	4' - 0"	178 °F	2.40	18"	3	AEROTECH	1, 2
RP-HS-5	RADIANT LINEAR EXTRUDED PANEL	301.0 Btu/h	1.0 GPM	6' - 0"	178 °F	4.10	18"	3	AEROTECH	1, 2
RP-HS-6	RADIANT LINEAR EXTRUDED PANEL	301.0 Btu/h	1.0 GPM	6' - 0"	178 °F	4.10	18"	3	AEROTECH	1, 2
RP-HS-7	RADIANT LINEAR EXTRUDED PANEL	301.0 Btu/h	1.0 GPM	6' - 0"	178 °F	4.10	18"	3	AEROTECH	1, 2
RP-HS-8	RADIANT LINEAR EXTRUDED PANEL	301.0 Btu/h	1.0 GPM	6' - 0"	178 °F	4.10	18"	3	AEROTECH	1, 2
RP-HS-9	RADIANT LINEAR EXTRUDED PANEL	301.0 Btu/h	1.0 GPM	6' - 0"	178 °F	4.10	18"	3	AEROTECH	1, 2
RP-HS-10	RADIANT LINEAR EXTRUDED PANEL	301.0 Btu/h	0.5 GPM	2' - 0"	178 °F	1.10	18"	3	AEROTECH	1, 2
RP-HS-11	RADIANT LINEAR EXTRUDED PANEL	301.0 Btu/h	1.0 GPM	6' - 0"	178 °F	4.10	18"	3	AEROTECH	1, 2
RP-HS-12	RADIANT LINEAR EXTRUDED PANEL	301.0 Btu/h	1.0 GPM	6' - 0"	178 °F	4.10	18"	3	AEROTECH	1, 2
RP-HS-13	RADIANT LINEAR EXTRUDED PANEL	301.0 Btu/h	0.5 GPM	2' - 0"	178 °F	1.10	18"	3	AEROTECH	1, 2
RP-HS-14	RADIANT LINEAR EXTRUDED PANEL	301.0 Btu/h	0.5 GPM	2' - 0"	178 °F	1.10	18"	3	AEROTECH	1, 2
RP-HS-15	RADIANT LINEAR EXTRUDED PANEL	301.0 Btu/h	1.0 GPM	6' - 0"	178 °F	4.10	18"	3	AEROTECH	1, 2
RP-HS-16	RADIANT LINEAR EXTRUDED PANEL	301.0 Btu/h	1.0 GPM	6' - 0"	178 °F	4.10	18"	3	AEROTECH	1, 2
RP-HS-17	RADIANT LINEAR EXTRUDED PANEL	301.0 Btu/h	0.5 GPM	2' - 0"	178 °F	1.10	18"	3	AEROTECH	1, 2
RP-HS-18	RADIANT LINEAR EXTRUDED PANEL	301.0 Btu/h	1.0 GPM	6' - 0"	178 °F	4.10	18"	3	AEROTECH	1, 2
RP-HS-19	RADIANT LINEAR EXTRUDED PANEL	301.0 Btu/h	1.0 GPM	6' - 0"	178 °F	4.10	18"	3	AEROTECH	1, 2
RP-HS-20	RADIANT LINEAR EXTRUDED PANEL	301.0 Btu/h	1.0 GPM	6' - 0"	178 °F	4.10	18"	3	AEROTECH	1, 2
RP-HS-21	RADIANT LINEAR EXTRUDED PANEL	301.0 Btu/h	1.0 GPM	6' - 0"	178 °F	4.10	18"	3	AEROTECH	1, 2
RP-HS-22	RADIANT LINEAR EXTRUDED PANEL	301.0 Btu/h	1.0 GPM	6' - 0"	178 °F	4.10	18"	3	AEROTECH	1, 2
RP-HS-23	RADIANT LINEAR EXTRUDED PANEL	301.0 Btu/h	1.0 GPM	6' - 0"	178 °F	4.10	18"	3	AEROTECH	1, 2

DUCT SILENCER SCHEDULE

1. SHALL BE A STRAIGHT DISSIPATIVE SILENCER.
2. SHALL BE A RECTANGULAR, ELBOW, DISSIPATIVE SILENCER.

Mark	LENGTH	HEIGHT	WIDTH	LEG A	LEG B	AIRFLOW	VELOCITY	AIR PRESSURE DROP (IN WG)	Description	OCTAVE BAND DYNAMIC INSERTION LOSS (dB) 63 Hz	125 Hz	250 Hz	500 Hz	1000 Hz	2000 Hz	4000 Hz	8000 Hz	BASIS OF DESIGN MFG. AND MODEL	REMARKS
DS-HS-1	3' - 0"	16 in	40 in			3,630 CFM	-817 FPM	0.02	Rectangular High Velocity - Absorptive Silencer	4	6	10	16	16	13	9	7	Price Industries RH36/4A	1
DS-HS-2	3' - 0"	16 in	40 in			5,575 CFM	-1,254 FPM	0.05	Rectangular High Velocity - Absorptive Silencer	4	6	10	16	16	13	9	7	Price Industries RH36/4A	1
DS-HS-3	3' - 0"	16 in	52 in			7,246 CFM	1,254 FPM	0.04	Rectangular High Velocity - Absorptive Silencer	4	6	8	14	11	9	7	6	Price Industries RH36/7A	1
DS-HS-4	3' - 0"	8 in	52 in			3,559 CFM	1,232 FPM	0.04	Rectangular High Velocity - Absorptive Silencer	4	6	8	14	11	9	7	6	Price Industries RH36/7A	1

HEATING COIL SCHEDULE

1. PROVIDE 16 GAUGE GALVANIZED STEEL CASING COIL WITH ALUMINUM FINS, 0.049" TUBE WALL THICKNESS, AND 1-1/2" CONNECTION SIZES.

Mark	SUPPLY AIRFLOW	SIZE HEIGHT	SIZE LENGTH	FLUID TYPE	CAPACITY HEATING	TEMPERATURE EWT	TEMPERATURE LWT	FLOW	PRESSURE DROP HEATING	TEMPERATURE EAT	TEMPERATURE LAT	AIR PRESSURE DROP	FACE VELOCITY	COIL FINS DENSITY PER INCH	COIL ROWS	VOLUME	BASIS OF DESIGN MFG. AND MODEL	REMARKS
HC-HS-1	11,300 CFM	36 in	52 in	40% PROPYLENE GLCYOL	218,000 Btu/h	180 °F	160 °F	23.5 GPM	1.70 Feet	46 °F	63.8 °F	0.21 in-wg	869 FPM	7	1	1.90 gal	GREENHECK HW58S01H07	1

ROOFTOP UNIT SCHEDULE

1. PROVIDE UNIT WITH FACTORY WIRED 115 VOLT CONVENIENCE OUTLET.
2. UNIT TO BE PRE-PURCHASED DIRECTLY BY SCHOOL DISTRICT. UNIT PERFORMANCE SHOWN FOR INFORMATION PURPOSES TO BIDDERS. ALL INSTALLATION WORK REQUIRED FOR UNIT OPERATION SHALL BE BY THE MECHANICAL CONTRACTOR, INCLUDING RIGGING AND HOISTING RTU TO FINAL INSTALLATION LOCATION.

Mark	IDENTITY DATA: MANUFACTURER	MODEL	ELECTRICAL DATA: VOLTS	PHASE	HERTZ	SUPPLY FAN HP	SUPPLY FAN BRAKE HP	HP EXHAUST FAN	HP BRAKE EXHAUST FAN	ELECTRICAL MCA	ELECTRICAL MOP
RTU-HS-1	Valent	@Model	208 V	3	60	10	7.71	5	3.59	214.5	250

Mark	HEATING COIL (NOT USED): HOT WATER COIL FPI	ROWS	HOT WATER EWT	HOT WATER LWT	HEATING FLOW	WATER PRESSURE DROP HEATING (FEET)	AIR HEATING COIL PRESSURE DROP	HEATING EAT	HEATING LAT	HEATING TOTAL CAPACITY	FILTER SECTION: PRE-FILTER FILTER	FINAL FILTER	PRESSURE DROP (IN WC)	AIRFLOW DATA: SUPPLY AIR	SUPPLY AIR EXTERNAL STATIC PRESSURE (IN WC)	TOTAL STATIC PRESSURE (IN WC)	RETURN AIR	OUTSIDE AIR	EXHAUST AIR	EXHAUST FAN TOTAL STATIC PRESSURE
RTU-HS-1												MERV-14	0.298	11,304 CFM	3.75	6.055	0 CFM	11,304 CFM	10,665 CFM	2.513 in-wg

Mark	DIRECT EXPANSION COOLING SYSTEM SECTION: COOLING EAT DB	COOLING EAT WB	COOLING LAT COIL DB	COOLING LAT COIL WB	COOLING LAT UNIT DB	COOLING LAT UNIT WB	COOLING SENSIBLE CAPACITY (MBH)	COOLING TOTAL CAPACITY (MBH)	COOLING TOTAL TONNAGE	EVAPORATOR PRESSURE DROP	HOT GAS REHEAT COIL CAPACITY (MBH)	REHEAT LAT	IEER	EER
RTU-HS-1	80.67 °F	67.30 °F	55.70 °F	55.70 °F			304.5	412.0	30.00	0.302 in-wg	261.6	77.6 °F	14.7	10.4

Mark	ENERGY RECOVERY WHEEL SECTION: ERV OA AIRFLOW	ERV EA AIRFLOW	ERV PRESSURE DROP	ERV TOTAL COOLING CAPACITY	ERV TOTAL HEATING CAPACITY	ERV OA TEMPERATURE COOLING EAT DB	ERV OA TEMPERATURE COOLING EAT WB	ERV OA TEMPERATURE COOLING LAT DB	ERV OA TEMPERATURE COOLING LAT WB	ERV OA TEMPERATURE EAT DB WINTER	ERV OA TEMPERATURE EAT WB WINTER	ERV OA TEMPERATURE LAT DB WINTER	ERV OA TEMPERATURE LAT WB WINTER	ERV EXHAUST EAT DB WINTER	ERV EXHAUST EAT WB WINTER	ERV EXHAUST LAT DB WINTER	EXHAUST LAT WB WINTER	ENTHALPY RECOVERY RATIO	OPERATING WEIGHT	MAXIMUM DISCHARGE dB LEVELS BY OCTAVE BAND: 63 Hz	125 Hz	250 Hz	500 Hz	1000 Hz	2000 Hz	4000 Hz	8000 Hz	REMARKS
RTU-HS-1	11,588 CFM	10,949 CFM	0.90 in-wg	340,800 Btu/h	466,358 Btu/h	92 °F	75 °F	80.70 °F	67.30 °F	8 °F	5.8 °F	46.2 °F	36.5 °F	68 °F	50 °F	26.10 °F	22.40 °F	65%	7,199 lb	93	93	100	91	88	84	84	80	1, 2

DRAWN BY: Author
CHECKED BY: Checker\StevePi\Documents\NANUET-HS-MECH_stevep82T37.rvt

1/10/2023 2:56:24 PM

ARCHITECT

ksqdesign

NEW YORK OKLAHOMA

KSQ Design
215 W 40th Street 15th Floor
New York, NY 10018
646.435.0660 office
www.ksq.design

Owner

Nanuet Union Free School District
103 Church St, Nanuet, NY 10954
845.627.9880 office
http://www.nanuetsd.org/

Structural Engineer

Clapper Structural Engineering
160 Partition Street
Saugerties, NY 12477
845.943.9601
www.clapperstructural.com

MEP Engineer

Sage Engineering Associates, LLP
9 Columbia Circle
Albany NY 12203
518.453.6091 office
518.453.6092 fax
www.sagellp.com

Civil Engineer

LaBella Associates
4 British American Blvd.
Latham, NY 12110
518.266.7323
www.labellapc.com

Environmental Engineer

Green Path Environmental
79 Glover Street, Suite 1
Staten Island, NY 10308
347.276.2339
www.gpe.nyc

Construction Manager

Jacobs
One Penn Plaza
54th Floor, Suite 5420
New York, NY 10119
646.908.6550
www.jacobs.com

STATE OF NEW YORK · JOHN VENDITTE · 083994 · LICENSED PROFESSIONAL ENGINEER

NANUET

NANUET SENIOR HIGH SCHOOL

SED #: 50-01-08-03-0-003-034

103 Church St, Nanuet, NY 10954

N

REVISIONS

No.	Description	Date
1	BID ADDENDUM 1	01/10/23

ISSUED: BID SET ISSUANCE

DATE: DECEMBER 15, 2022

SCALE:

SHEET NAME:
HVAC SCHEDULES

SHEET NUMBER:
HS-M002

ISSUE FOR BID SET

COPYRIGHT © 2014 KSQ ARCHITECTS, PC

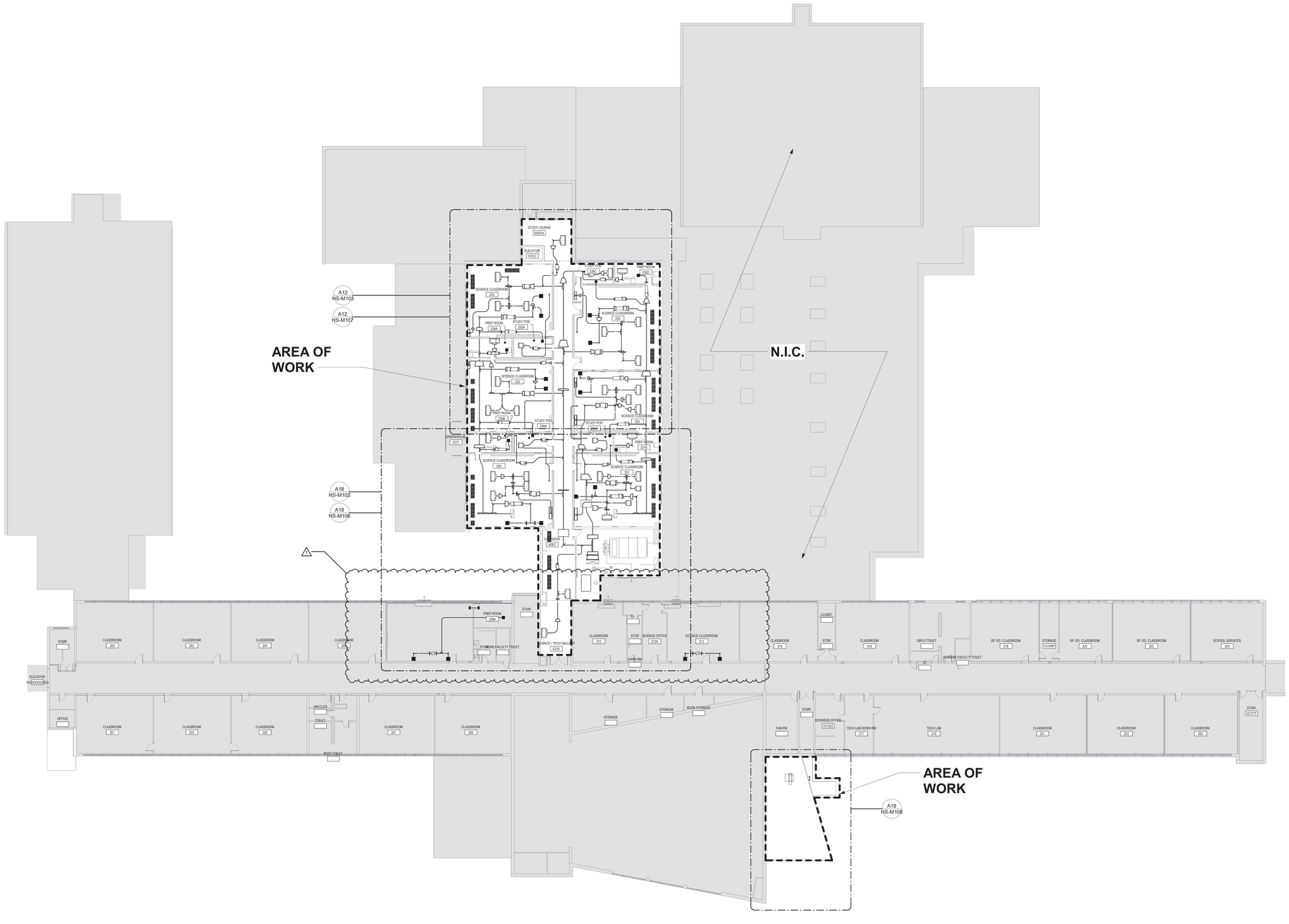

A18 OVERALL 2ND FLOOR PLAN
1/16" = 1'-0"

ARCHITECT

ksqdesign

NEW YORK OKLAHOMA

KSQ Design
215 W 40th Street 15th Floor
New York, NY 10018
646.435.0660 office
www.ksq.design

Owner

Nanuet Union Free School District
103 Church St, Nanuet, NY 10954
845.627.9880 office
http://www.nanuetsd.org/

Structural Engineer

Clapper Structural Engineering
160 Partition Street
Saugerties, NY 12477
845.943.9601
www.clapperstructural.com

MEP Engineer

Sage Engineering Associates, LLP
9 Columbia Circle
Albany NY 12203
518.453.6091 office
518.453.6092 fax
www.sagellp.com

Civil Engineer

LaBella Associates
4 British American Blvd.
Latham, NY 12110
518.266.7323
www.labellapc.com

Environmental Engineer

Green Path Environmental
79 Glover Street, Suite 1
Staten Island, NY 10308
347.276.2339
www.gpe.nyc

Construction Manager

Jacobs
One Penn Plaza
54th Floor, Suite 5420
New York, NY 10119
646.908.6550
www.jacobs.com

STATE OF NEW YORK
JOHN VENDITTI
083994
LICENSED PROFESSIONAL ENGINEER

NANUET

NANUET SENIOR HIGH SCHOOL

SED #: 50-01-08-03-0-003-034

103 Church St, Nanuet, NY 10954

N

REVISIONS

No.	Description	Date
1	BID ADDENDUM 1	01/10/23

ISSUED: BID SET ISSUANCE

DATE: DECEMBER 15, 2022

SCALE: 1/16" = 1'-0"

SHEET NAME:
OVERALL SECOND FLOOR PLAN

SHEET NUMBER:
HS-M101

ISSUE FOR BID SET

DRAWN BY: Author
CHECKED BY: Checker
C:\Users\ksqadmin\Documents\NANUET HS MECH_Revit(ETS).rvt
1/10/2023 2:56:27 PM

PROJECT NUMBER: 2111005.00

COPYRIGHT © 2014 KSQ ARCHITECTS, PC

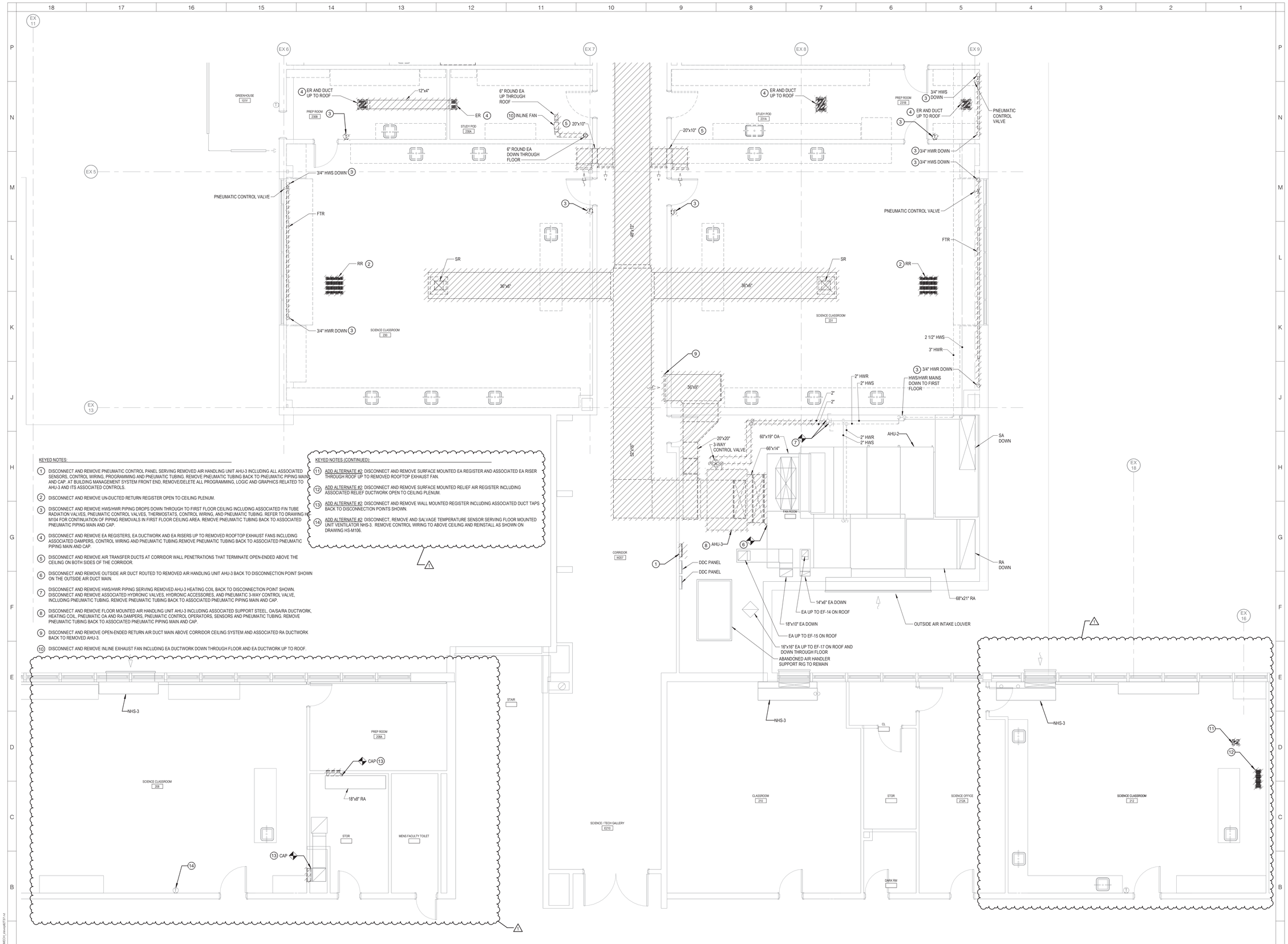

KEYED NOTES:

1. DISCONNECT AND REMOVE PNEUMATIC CONTROL PANEL SERVING REMOVED AIR HANDLING UNIT AHU-3 INCLUDING ALL ASSOCIATED SENSORS, CONTROL WIRING, PROGRAMMING AND PNEUMATIC TUBING. REMOVE PNEUMATIC TUBING BACK TO PNEUMATIC PIPING MAIN AND CAP. AT BUILDING MANAGEMENT SYSTEM FRONT END, REMOVE/DELETE ALL PROGRAMMING, LOGIC AND GRAPHICS RELATED TO AHU-3 AND ITS ASSOCIATED CONTROLS.
2. DISCONNECT AND REMOVE UN-DUCTED RETURN REGISTER OPEN TO CEILING PLENUM.
3. DISCONNECT AND REMOVE HWS/HWR PIPING DROPS DOWN THROUGH TO FIRST FLOOR CEILING INCLUDING ASSOCIATED FIN TUBE RADIATION VALVES, PNEUMATIC CONTROL VALVES, THERMOSTATS, CONTROL WIRING, AND PNEUMATIC TUBING. REFER TO DRAWING HS-M104 FOR CONTINUATION OF PIPING REMOVALS IN FIRST FLOOR CEILING AREA. REMOVE PNEUMATIC TUBING BACK TO ASSOCIATED PNEUMATIC PIPING MAIN AND CAP.
4. DISCONNECT AND REMOVE EA REGISTERS, EA DUCTWORK AND EA RISERS UP TO REMOVED ROOFTOP EXHAUST FANS INCLUDING ASSOCIATED DAMPERS, CONTROL WIRING AND PNEUMATIC TUBING.REMOVE PNEUMATIC TUBING BACK TO ASSOCIATED PNEUMATIC PIPING MAIN AND CAP.
5. DISCONNECT AND REMOVE AIR TRANSFER DUCTS AT CORRIDOR WALL PENETRATIONS THAT TERMINATE OPEN-ENDED ABOVE THE CEILING ON BOTH SIDES OF THE CORRIDOR.
6. DISCONNECT AND REMOVE OUTSIDE AIR DUCT ROUTED TO REMOVED AIR HANDLING UNIT AHU-3 BACK TO DISCONNECTION POINT SHOWN ON THE OUTSIDE AIR DUCT MAIN.
7. DISCONNECT AND REMOVE HWS/HWR PIPING SERVING REMOVED AHU-3 HEATING COIL BACK TO DISCONNECTION POINT SHOWN. DISCONNECT AND REMOVE ASSOCIATED HYDRONIC VALVES, HYDRONIC ACCESSORES, AND PNEUMATIC 3-WAY CONTROL VALVE, INCLUDING PNEUMATIC TUBING. REMOVE PNEUMATIC TUBING BACK TO ASSOCIATED PNEUMATIC PIPING MAIN AND CAP.
8. DISCONNECT AND REMOVE FLOOR MOUNTED AIR HANDLING UNIT AHU-3 INCLUDING ASSOCIATED SUPPORT STEEL, OA/SA/RA DUCTWORK, HEATING COIL, PNEUMATIC OA AND RA DAMPERS, PNEUMATIC CONTROL OPERATORS, SENSORS AND PNEUMATIC TUBING. REMOVE PNEUMATIC TUBING BACK TO ASSOCIATED PNEUMATIC PIPING MAIN AND CAP.
9. DISCONNECT AND REMOVE OPEN-ENDED RETURN AIR DUCT MAIN ABOVE CORRIDOR CEILING SYSTEM AND ASSOCIATED RA DUCTWORK BACK TO REMOVED AHU-3.
10. DISCONNECT AND REMOVE INLINE EXHAUST FAN INCLUDING EA DUCTWORK DOWN THROUGH FLOOR AND EA DUCTWORK UP TO ROOF.

KEYED NOTES (CONTINUED):

11. ADD ALTERNATE #2: DISCONNECT AND REMOVE SURFACE MOUNTED EA REGISTER AND ASSOCIATED EA RISER THROUGH ROOF UP TO REMOVED ROOFTOP EXHAUST FAN.
12. ADD ALTERNATE #2: DISCONNECT AND REMOVE SURFACE MOUNTED RELIEF AIR REGISTER INCLUDING ASSOCIATED RELIEF DUCTWORK OPEN TO CEILING PLENUM.
13. ADD ALTERNATE #2: DISCONNECT AND REMOVE WALL MOUNTED REGISTER INCLUDING ASSOCIATED DUCT TAPS BACK TO DISCONNECTION POINTS SHOWN.
14. ADD ALTERNATE #2: DISCONNECT, REMOVE AND SALVAGE TEMPERATURE SENSOR SERVING FLOOR MOUNTED UNIT VENTILATOR NHS-3. REMOVE CONTROL WIRING TO ABOVE CEILING AND REINSTALL AS SHOWN ON DRAWING HS-M106.

A18 2ND FLOOR SCIENCE WING REMOVALS - NORTH

1/4" = 1'-0"

DRAWN BY: Author
CHECKED BY: Checker
C:\Users\Author\Documents\NANUET HS MECH_Library\ET37.rvt
1/10/2023 2:56:29 PM

ARCHITECT

ksqdesign

NEW YORK OKLAHOMA

KSQ Design
215 W 40th Street 15th Floor
New York, NY 10018
646.435.0660 office
www.ksq.design

Owner

Nanuet Union Free School District
103 Church St, Nanuet, NY 10954
845.627.9880 office
http://www.nanuetsd.org/

Structural Engineer

Clapper Structural Engineering
160 Partition Street
Saugerties, NY 12477
845.943.9601
www.clapperstructural.com

MEP Engineer

Sage Engineering Associates, LLP
9 Columbia Circle
Albany NY 12203
518.453.6091 office
518.453.6092 fax
www.sagellp.com

Civil Engineer

LaBella Associates
4 British American Blvd.
Latham, NY 12110
518.266.7323
www.labellapc.com

Environmental Engineer

Green Path Environmental
79 Glover Street, Suite 1
Staten Island, NY 10308
347.276.2339
www.gpe.nyc

Construction Manager

Jacobs
One Penn Plaza
54th Floor, Suite 5420
New York, NY 10119
646.908.6550
www.jacobs.com

STATE OF NEW YORK · JOHN VENDITTI · 083994 · LICENSED PROFESSIONAL ENGINEER

NANUET

NANUET SENIOR HIGH SCHOOL

SED #: 50-01-08-03-0-003-034

103 Church St, Nanuet, NY 10954

N

REVISIONS

No.	Description	Date
1	BID ADDENDUM 1	01/10/23

ISSUED: BID SET ISSUANCE

DATE: DECEMBER 15, 2022

SCALE: 1/4" = 1'-0"

SHEET NAME:
PARTIAL 2ND FLOOR NORTH REMOVALS

SHEET NUMBER:

HS-M102

ISSUE FOR BID SET

PROJECT NUMBER: 21111005.00 COPYRIGHT © 2014 KSQ ARCHITECTS, PC

KEYED NOTES:

1. DISCONNECT AND REMOVE ROOF MOUNTED EXHAUST FAN INCLUDING ASSOCIATED EA RISER, CONTROL WIRING AND ROOF CURB.
2. DISCONNECT AND REMOVE 5" ROUND DUCT DOWN THROUGH ROOF.
3. ADD ALTERNATE #2: DISCONNECT AND REMOVE SCIENCE CLASSROOM 212 ROOF MOUNTED EXHAUST FAN INCLUDING ASSOCIATED EA RISER THROUGH ROOF, BACKDRAFT DAMPER, CONTROL WIRING AND ROOF CURB.

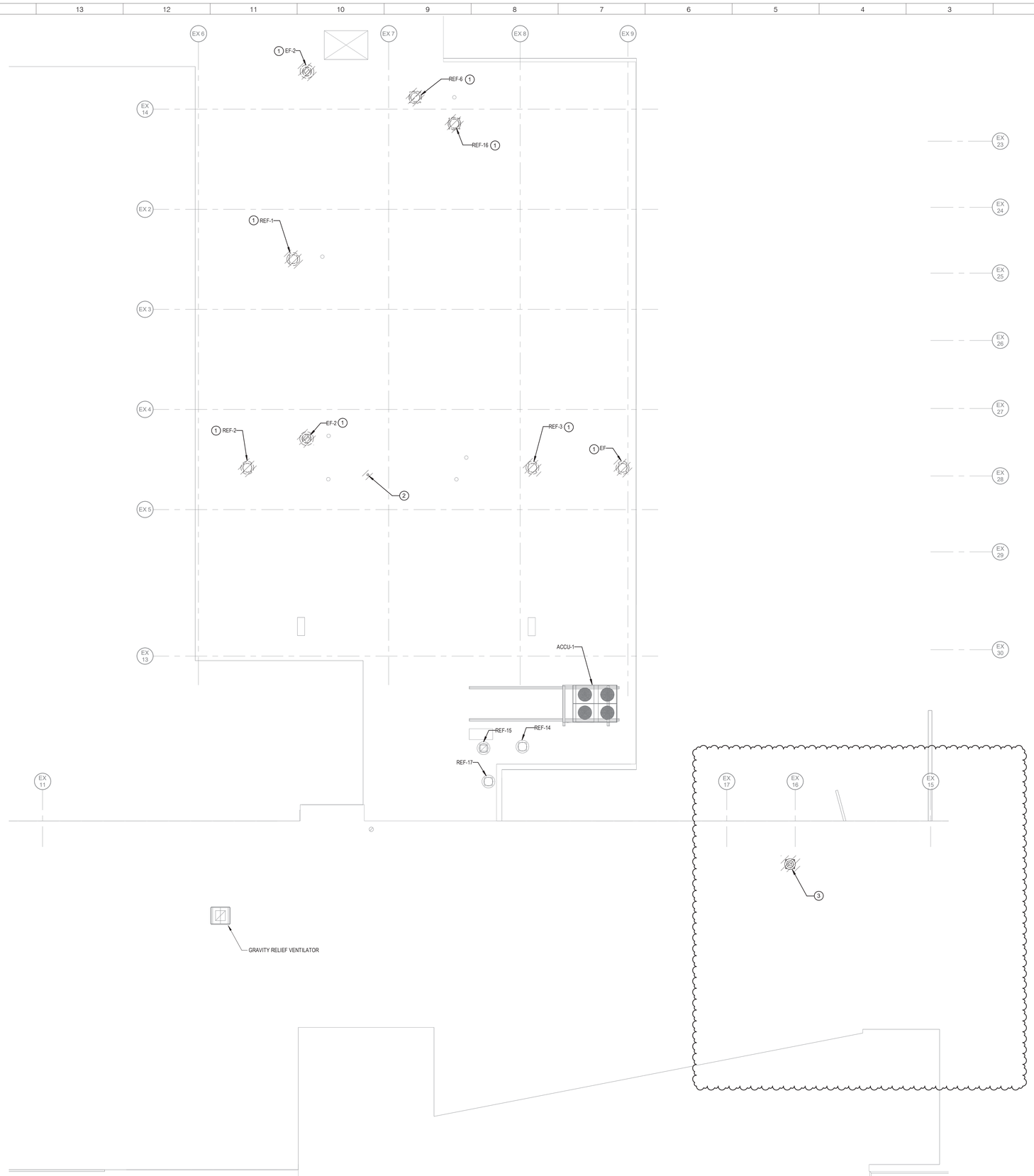

A14 PARTIAL ROOF REMOVALS - SCIENCE WING

1/8" = 1'-0"

ARCHITECT

ksqdesign

NEW YORK OKLAHOMA

KSQ Design
215 W 40th Street 15th Floor
New York, NY 10018
646.435.0660 office
www.ksq.design

Owner

Nanuet Union Free School District
103 Church St, Nanuet, NY 10954
845.627.9880 office
http://www.nanuetsd.org/

Structural Engineer

Clapper Structural Engineering
160 Partition Street
Saugerties, NY 12477
845.943.9601
www.clapperstructural.com

MEP Engineer

Sage Engineering Associates, LLP
9 Columbia Circle
Albany NY 12203
518.453.6091 office
518.453.6092 fax
www.sagellp.com

Civil Engineer

LaBella Associates
4 British American Blvd.
Latham, NY 12110
518.266.7323
www.labellapc.com

Environmental Engineer

Green Path Environmental
79 Glover Street, Suite 1
Staten Island, NY 10308
347.276.2339
www.gpe.nyc

Construction Manager

Jacobs
One Penn Plaza
54th Floor, Suite 5420
New York, NY 10119
646.908.6550
www.jacobs.com

STATE OF NEW YORK · JOHN VENDITTI · 083994 · LICENSED PROFESSIONAL ENGINEER

NANUET

NANUET SENIOR HIGH SCHOOL

SED #: 50-01-08-03-0-003-034

103 Church St, Nanuet, NY 10954

N

REVISIONS

No.	Description	Date
1	BID ADDENDUM 1	01/10/23

ISSUED: BID SET ISSUANCE

DATE: DECEMBER 15, 2022

SCALE: 1/8" = 1'-0"

SHEET NAME:
SCIENCE WING ROOF AND SECURITY VESTIBULE REMOVALS

SHEET NUMBER:

HS-M105

ISSUE FOR BID SET

DRAWN BY: jlurkov
CHECKED BY: jlurkov
Checker Sheet*/Documents/NANUET HS MECH_Library(ETS).rvt
1/10/2023 2:56:29 PM

PROJECT NUMBER: 2111005.00

COPYRIGHT © 2014 KSQ ARCHITECTS, PC

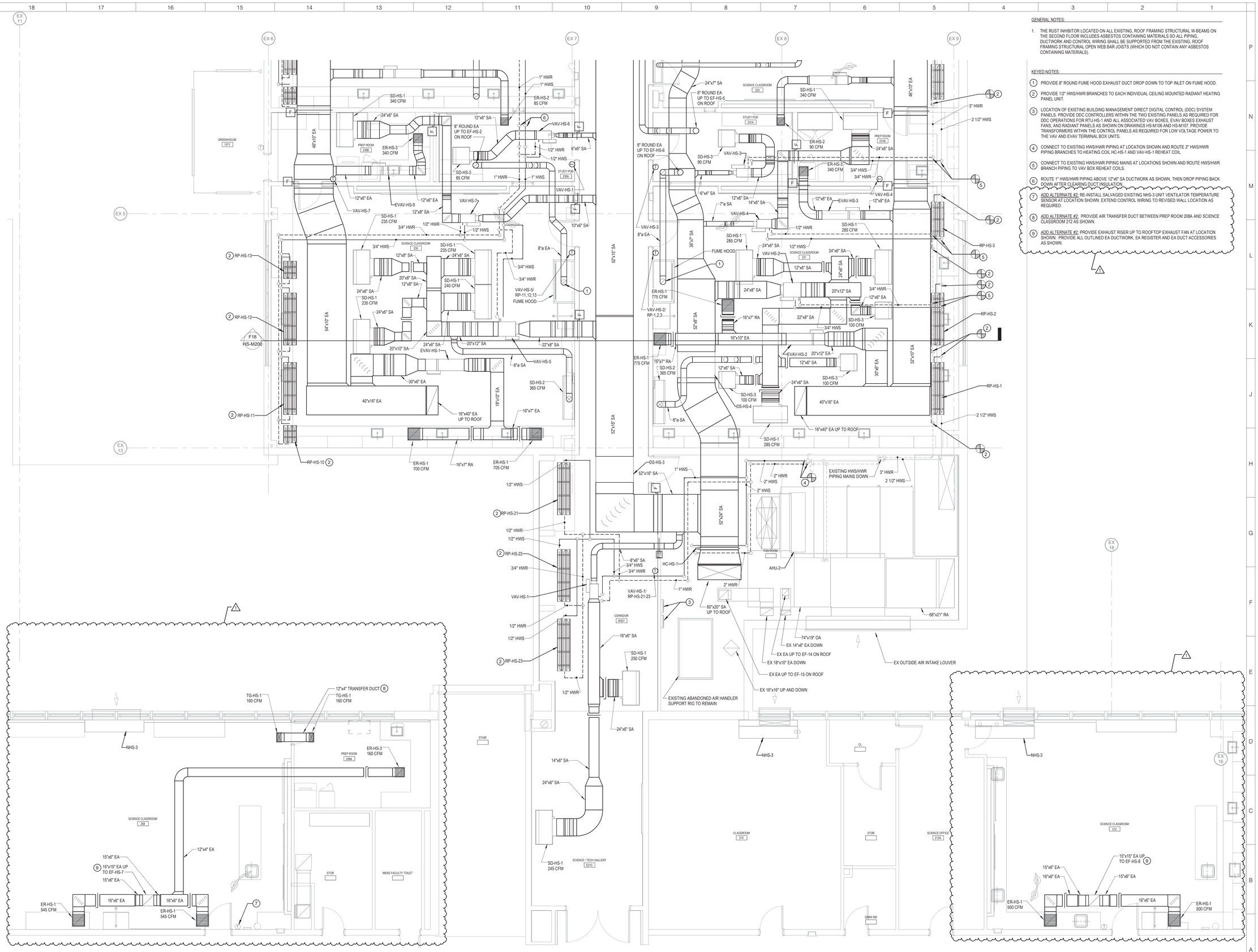

A18 2ND FLOOR SCIENCE WING PLAN - NORTH
1/4" = 1'-0"

GENERAL NOTES:

1. THE RUST INHIBITOR LOCATED ON ALL EXISTING, ROOF FRAMING STRUCTURAL W-BEAMS ON THE SECOND FLOOR INCLUDES ASBESTOS CONTAINING MATERIALS SO ALL PIPING, DUCTWORK AND CONTROL WIRING SHALL BE SUPPORTED FROM THE EXISTING, ROOF FRAMING STRUCTURAL OPEN WEB BAR JOISTS (WHICH DO NOT CONTAIN ANY ASBESTOS CONTAINING MATERIALS).

KEYED NOTES:

1. PROVIDE 8" ROUND FUME HOOD EXHAUST DUCT DROP DOWN TO TOP INLET ON FUME HOOD.
2. PROVIDE 1/2" HWS/HWR BRANCHES TO EACH INDIVIDUAL CEILING MOUNTED RADIANT HEATING PANEL UNIT.
3. LOCATION OF EXISTING BUILDING MANAGEMENT DIRECT DIGITAL CONTROL (DDC) SYSTEM PANELS. PROVIDE DDC CONTROLLERS WITHIN THE TWO EXISTING PANELS AS REQUIRED FOR DDC OPERATIONS FOR RTU-HS-1 AND ALL ASSOCIATED VAV BOXES, EVAV BOXES EXHAUST FANS, AND RADIANT PANELS AS SHOWN ON DRAWINGS HS-M106 AND HS-M107. PROVIDE TRANSFORMERS WITHIN THE CONTROL PANELS AS REQUIRED FOR LOW VOLTAGE POWER TO THE VAV AND EVAV TERMINAL BOX UNITS.
4. CONNECT TO EXISTING HWS/HWR PIPING AT LOCATION SHOWN AND ROUTE 2" HWS/HWR PIPING BRANCHES TO HEATING COIL HC-HS-1 AND VAV-HS-1 REHEAT COIL.
5. CONNECT TO EXISTING HWS/HWR PIPING MAINS AT LOCATIONS SHOWN AND ROUTE HWS/HWR BRANCH PIPING TO VAV BOX REHEAT COILS.
6. ROUTE 1" HWS/HWR PIPING ABOVE 12"x6" SA DUCTWORK AS SHOWN, THEN DROP PIPING BACK DOWN AFTER CLEARING DUCT INSULATION.
7. ADD ALTERNATE #2: RE-INSTALL SALVAGED EXISTING NHS-3 UNIT VENTILATOR TEMPERATURE SENSOR AT LOCATION SHOWN. EXTEND CONTROL WIRING TO REVISED WALL LOCATION AS REQUIRED.
8. ADD ALTERNATE #2: PROVIDE AIR TRANSFER DUCT BETWEEN PREP ROOM 208A AND SCIENCE CLASSROOM 212 AS SHOWN.
9. ADD ALTERNATE #2: PROVIDE EXHAUST RISER UP TO ROOFTOP EXHAUST FAN AT LOCATION SHOWN. PROVIDE ALL OUTLINED EA DUCTWORK, EA REGISTER AND EA DUCT ACCESSORIES AS SHOWN.

ARCHITECT

ksqdesign

NEW YORK OKLAHOMA

KSQ Design
215 W 40th Street 15th Floor
New York, NY 10018
646.435.0660 office
www.ksq.design

Owner

Nanuet Union Free School District
103 Church St, Nanuet, NY 10954
845.627.9880 office
http://www.nanuetsd.org/

Structural Engineer

Clapper Structural Engineering
160 Partition Street
Saugerties, NY 12477
845.943.9601
www.clapperstructural.com

MEP Engineer

Sage Engineering Associates, LLP
9 Columbia Circle
Albany NY 12203
518.453.6091 office
518.453.6092 fax
www.sagellp.com

Civil Engineer

LaBella Associates
4 British American Blvd.
Latham, NY 12110
518.266.7323
www.labellapc.com

Environmental Engineer

Green Path Environmental
79 Glover Street, Suite 1
Staten Island, NY 10308
347.276.2339
www.gpe.nyc

Construction Manager

Jacobs
One Penn Plaza
54th Floor, Suite 5420
New York, NY 10119
646.908.6550
www.jacobs.com

STATE OF NEW YORK · JOHN VENDITTI · 083994 · LICENSED PROFESSIONAL ENGINEER

NANUET

NANUET SENIOR HIGH SCHOOL

SED #: 50-01-08-03-0-003-034

103 Church St, Nanuet, NY 10954

N

REVISIONS

No.	Description	Date
1	BID ADDENDUM 1	01/10/23

ISSUED: BID SET ISSUANCE

DATE: DECEMBER 15, 2022

SCALE: 1/4" = 1'-0"

SHEET NAME:
PARTIAL 2ND FLOOR NORTH PLAN

SHEET NUMBER:

HS-M106

ISSUE FOR BID SET

DRAWN BY: Author
CHECKED BY: Checker
Checker/Sheet/Documents/NANUET-HS-MEQP_Union.rvt/ET37-1.rvt
1/10/2023 2:56:31 PM

PROJECT NUMBER: 2111005.00

COPYRIGHT © 2014 KSQ ARCHITECTS, PC

GENERAL NOTES:

1. ROOF MOUNTED SUPPLY DUCTWORK SHALL BE INTERNALLY LINED, DOUBLE-WALL DUCTWORK WITH 2" THICK ELASOMTERIC FOAM LINER. DUCT DIMENSIONS LISTED ARE EXTERNAL DIMENSIONS.
2. ROOF MOUNTED EXHAUST DUCTWORK SHALL BE INTERNALLY LINED, DOUBLE-WALL DUCTWORK WITH 1" THICK ELASOMTERIC FOAM LINER. DUCT DIMENSIONS LISTED ARE EXTERNAL DIMENSIONS.
3. PROVIDE WEATHER PROOFING JACKETING OVER ALL, EXPOSED ROOFTOP SUPPLY AND EXHAUST DUCTWORK, INCLUDING OVER DUCT SILENCERS INSTALLED WITHIN ROOFTOP DUCTWORK SYSTEMS.
4. PROVIDE EQUIPMENT AND DUCTWORK IDENTIFICATION ON THE OUTSIDE OF THE WEATHER PROOFING JACKETING FOR ALL ROOFTOP DUCTWORK SYSTEMS AND DUCT SILENCERS.

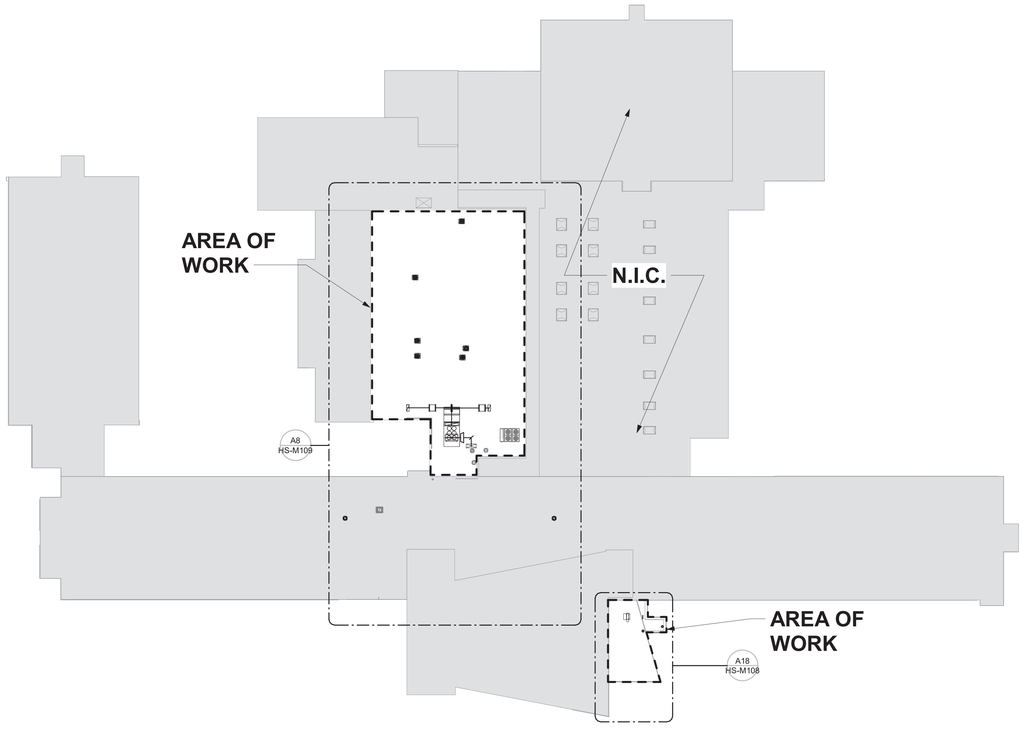

F18 ROOF KEY PLAN
1/32" = 1'-0"

KEYED NOTES:

1. PROVIDE BOTTOM DISCHARGE AND INLET CONNECTIONS TO RTU-HS-1 AND ROUTE SA AND EA DUCT MAINS ON ROOF. RTU-HS-1 SHALL BE MOUNTED ON TOP OF W12x26 STEEL BEAMS ABOVE ROOF SURFACE. SA AND EA DUCT MAINS SHALL BE EXPOSED ABOVE ROOF SURFACE FOLLOWING DUCT PENETRATIONS IN AND OUT OF THE BOTTOM OF THE RTU. MOUNT RTU ON TOP OF STEEL DUNNAGE PER MANUFACTURER'S RECOMMENDATIONS AND AFFIX RTU PERIMETER BASE RAIL TO STEEL PER MANUFACTURER'S INSTRUCTION.
2. TERMINATE TOP OF FUME EXHAUST HOOD FAN OUTLET MINIMUM OF 10-FEET ABOVE ROOF SURFACE.
3. ADD ALTERNATE #2: PROVIDE EXHAUST FAN AND 16" HIGH ROOF CURB.

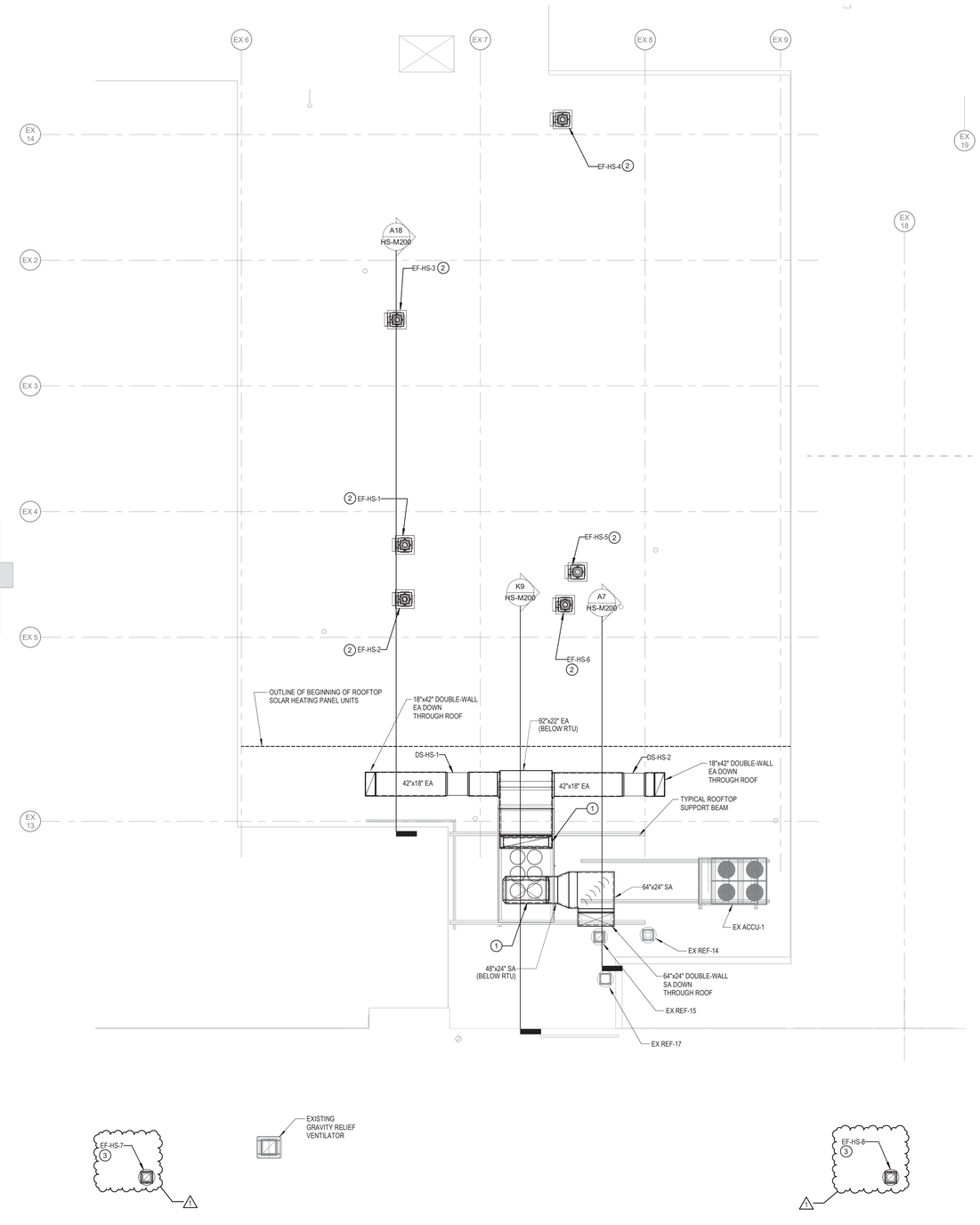

A8 PARTIAL ROOF PLAN - SCIENCE WING
1/8" = 1'-0"

ARCHITECT

ksqdesign

NEW YORK OKLAHOMA

KSQ Design
215 W 40th Street 15th Floor
New York, NY 10018
646.435.0660 office
www.ksq.design

Owner

Nanuet Union Free School District
103 Church St, Nanuet, NY 10954
845.627.9880 office
http://www.nanuetsd.org/

Structural Engineer

Clapper Structural Engineering
160 Partition Street
Saugerties, NY 12477
845.943.9601
www.clapperstructural.com

MEP Engineer

Sage Engineering Associates, LLP
9 Columbia Circle
Albany NY 12203
518.453.6091 office
518.453.6092 fax
www.sagellp.com

Civil Engineer

LaBella Associates
4 British American Blvd.
Latham, NY 12110
518.266.7323
www.labellapc.com

Environmental Engineer

Green Path Environmental
79 Glover Street, Suite 1
Staten Island, NY 10308
347.276.2339
www.gpe.nyc

Construction Manager

Jacobs
One Penn Plaza
54th Floor, Suite 5420
New York, NY 10119
646.908.6550
www.jacobs.com

STATE OF NEW YORK · JOHN VENDITTI · 083994 · LICENSED PROFESSIONAL ENGINEER

NANUET

NANUET SENIOR HIGH SCHOOL

SED #: 50-01-08-03-0-003-034

103 Church St, Nanuet, NY 10954

N

REVISIONS

No.	Description	Date
1	BID ADDENDUM 1	01/10/23

ISSUED: BID SET ISSUANCE

DATE: DECEMBER 15, 2022

SCALE: As indicated

SHEET NAME:
SCIENCE WING ROOF HVAC INSTALL PLAN

SHEET NUMBER:
HS-M109

ISSUE FOR BID SET

DRAWN BY: jlurkov
CHECKED BY: jlurkov
Checker Sheet*(Documents\NANUET HS MECH_Library\ZETA1.rvt

1/10/2023 2:56:32 PM

COPYRIGHT © 2014 KSQ ARCHITECTS, PC

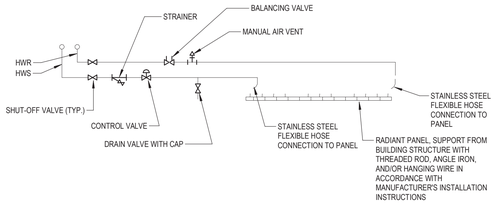

L18 CEILING RADIANT PANEL PIPING DETAIL
NOT TO SCALE

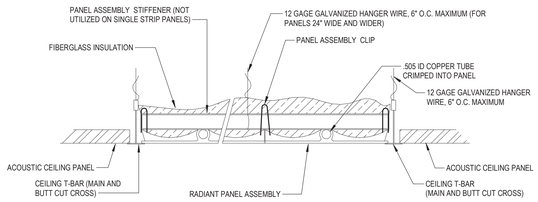

L12 RADIANT PANEL SUSPENDED CEILING DETAIL
NOT TO SCALE

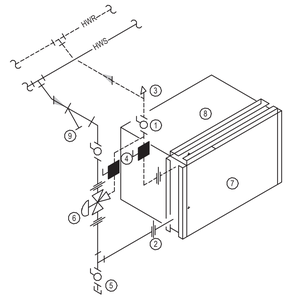

1. BALL VALVE (TYPICAL)
2. UNION (TYPICAL)
3. MANUAL AIR VENT
4. CALIBRATING BALANCING VALVE
5. DRAIN VALVE W/ CAP AND CHAIN
6. MODULATING THREE-WAY VALVE
7. VAV BOX HEATING COIL
8. VAV BOX
9. STRAINER

L7 VAV BOX HYDRONIC REHEAT COIL INSTALLATION DETAIL
NOT TO SCALE

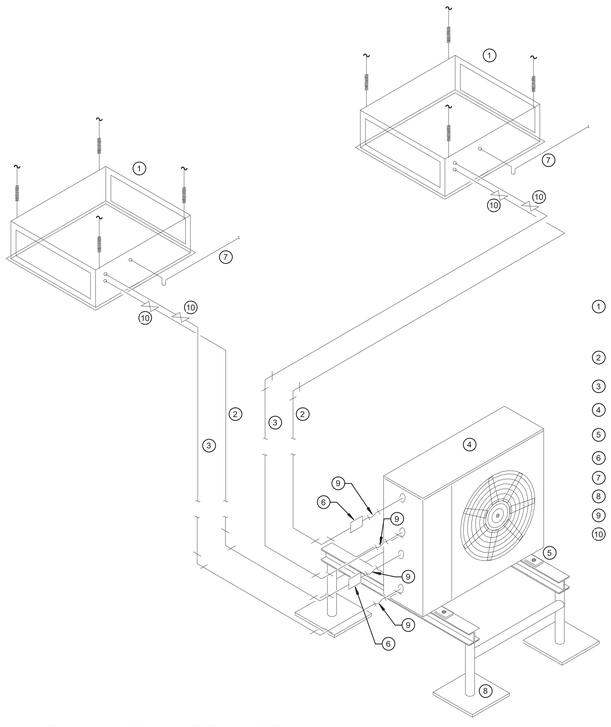

1. FAN COIL UNIT (TYP). RECESSED CEILING CASSETTE UNIT SHOWN). SUPPORT AND SPACE AS NECESSARY FOR REFRIGERANT AND CONDENSATE PIPING CONNECTIONS.
2. REFRIGERANT LIQUID LINE
3. REFRIGERANT SUCTION LINE
4. HEAT PUMP
5. HEAT PUMP UNIT ANCHOR POINT (ANCHOR TO EQUIPMENT PAD TYP 4)
6. LIQUID LINE FILTER DRYER
7. INSULATED CONDENSATE DRAIN LINE
8. HEAT PUMP STAND (MIN 18" ABOVE ROOF SURFACE)
9. FLEXIBLE CONNECTOR (TYP.)
10. SHUTOFF SERVICE VALVE (TYP)

E18 MUTLI-SPLIT SYSTEM DETAIL
NOT TO SCALE

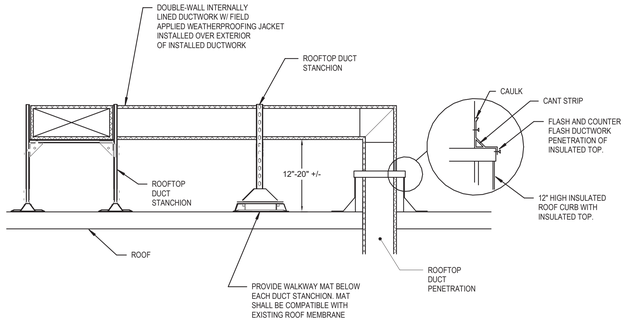

H10 ROOFTOP DUCTWORK INSTALLATION DETAIL
NOT TO SCALE

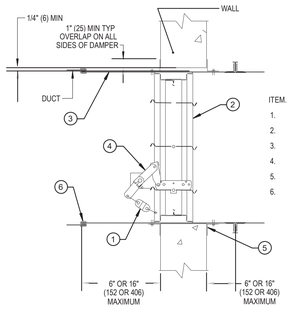

ITEM.
1. FUSIBLE LINK
2. DAMPER FRAME
3. SLEEVE
4. FUSIBLE LINK WITH LOCK
5. MOUNTING ANGLES
6. S-JOINT, SLEEVE TO DUCT

E11 IN-WALL FIRE DAMPER
NOT TO SCALE

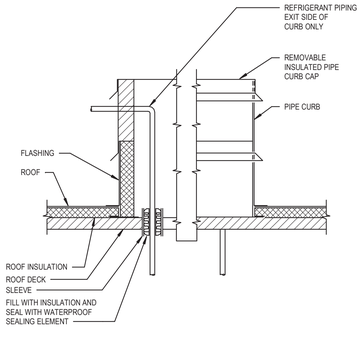

DETAIL NOTES:

A. MECHANICAL CONTRACTOR SHALL PROVIDE ROOF OPENING, FRAMING AND FLASHING, LOCATION, SETTING AND SECURING OF CURB.

B. PROVIDE SHIMS WHERE REQUIRED TO LEVEL CURB.

A18 SIDE ENTRY REFRIGERANT PIPING CURB PENETRATION DETAIL
NOT TO SCALE

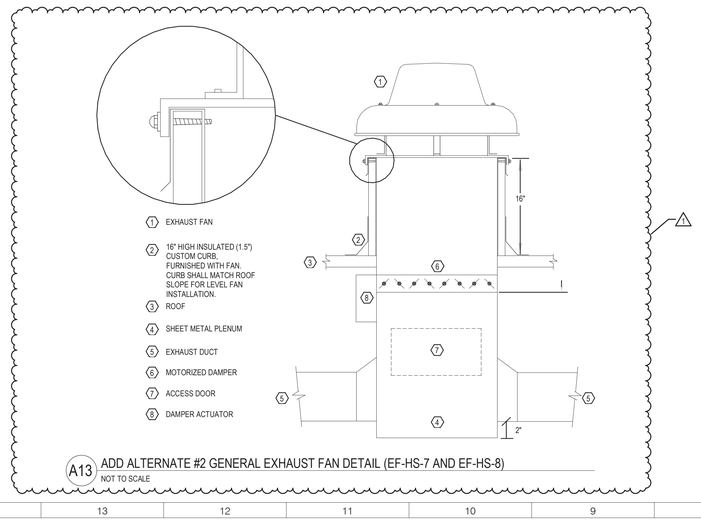

1. EXHAUST FAN
2. 16" HIGH INSULATED (1.5") CUSTOM CURB, FURNISHED WITH FAN. CURB SHALL MATCH ROOF SLOPE FOR LEVEL FAN INSTALLATION.
3. ROOF
4. SHEET METAL PLENUM
5. EXHAUST DUCT
6. MOTORIZED DAMPER
7. ACCESS DOOR
8. DAMPER ACTUATOR

A13 ADD ALTERNATE #2 GENERAL EXHAUST FAN DETAIL (EF-HS-7 AND EF-HS-8)
NOT TO SCALE

ARCHITECT

ksqdesign

NEW YORK OKLAHOMA

KSQ Design
215 W 40th Street 15th Floor
New York, NY 10018
646.435.0660 office
www.ksq.design

Owner

Nanuet Union Free School District
103 Church St, Nanuet, NY 10954
845.627.9880 office
http://www.nanuetsd.org/

Structural Engineer

Clapper Structural Engineering
160 Partition Street
Saugerties, NY 12477
845.943.9601
www.clapperstructural.com

MEP Engineer

Sage Engineering Associates, LLP
9 Columbia Circle
Albany NY 12203
518.453.6091 office
518.453.6092 fax
www.sagellp.com

Civil Engineer

LaBella Associates
4 British American Blvd.
Latham, NY 12110
518.266.7323
www.labellapc.com

Environmental Engineer

Green Path Environmental
79 Glover Street, Suite 1
Staten Island, NY 10308
347.276.2339
www.gpe.nyc

Construction Manager

Jacobs
One Penn Plaza
54th Floor, Suite 5420
New York, NY 10119
646.908.6550
www.jacobs.com

STATE OF NEW YORK · JOHN VENDITTI · 083994 · LICENSED PROFESSIONAL ENGINEER

NANUET

NANUET SENIOR HIGH SCHOOL

SED #: 50-01-08-03-0-003-034

103 Church St, Nanuet, NY 10954

N

REVISIONS

No.	Description	Date
1	BID ADDENDUM 1	01/10/23

ISSUED: BID SET ISSUANCE
DATE: DECEMBER 15, 2022
SCALE: NOT TO SCALE
SHEET NAME:
HVAC DETAILS

SHEET NUMBER:
HS-M602

ISSUE FOR BID SET

DRAWN BY: Author
CHECKED BY: Checker
Checker:SheetPlot:Documents\NANUET HS MECH_Library2023.rvt
1/10/2023 2:56:33 PM

PROJECT NUMBER: 2111005.00

COPYRIGHT © 2014 KSQ ARCHITECTS, PC

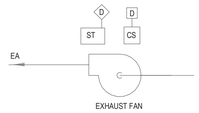

FUME HOOD EXHAUST FAN POINTS LIST

ITEM	DIGITAL		ANALOG		LOCAL INTERLOCK	NOTES
	INPUT	OUTPUT	INPUT	OUTPUT		
FAN START/STOP		X				RT, T
FAN STATUS	X					A

K17 FUME HOOD EXHAUST FAN CONTROL DIAGRAM
NOT TO SCALE

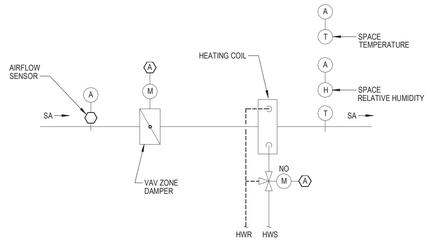

SUPPLY AIR VAV BOX POINTS LIST

ITEM	DIGITAL		ANALOG		NOTES
	INPUT	OUTPUT	INPUT	OUTPUT	
3-WAY MODULATING HEATING CONTROL VALVE				X	T
SPACE TEMPERATURE			X		T,A
AIRFLOW			X		T,A
DISCHARGE AIR TEMPERATURE			X		T
VAV ZONE DAMPER				X	T
ZONE SETPOINT ADJUSTMENT			X		
ZONE OVERRIDE	X				
SPACE RELATIVE HUMIDITY			X		T,A

K11 SUPPLY AIR VAV BOX WITH REHEAT COIL CONTROL DIAGRAM
NOT TO SCALE

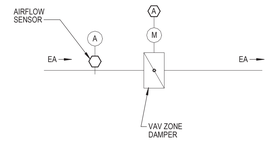

EXHAUST AIR VAV BOX POINTS LIST

ITEM	DIGITAL		ANALOG		NOTES
	INPUT	OUTPUT	INPUT	OUTPUT	
AIRFLOW			X		T,A
VAV ZONE DAMPER				X	T
ZONE SETPOINT ADJUSTMENT			X		
ZONE OVERRIDE	X				

3 EXHAUST AIR VAV BOX CONTROL DIAGRAM
NOT TO SCALE

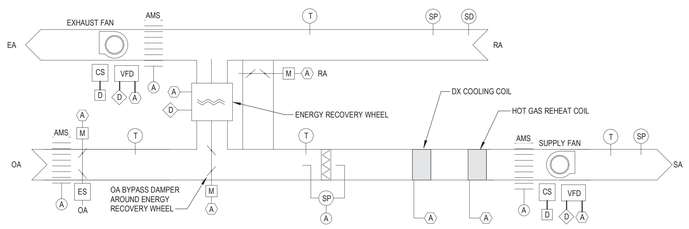

G17 RTU-HS-1 CONTROL DIAGRAM
NOT TO SCALE

RTU-HS-1 POINTS LIST

ITEM	DIGITAL		ANALOG		NOTES
	INPUT	OUTPUT	INPUT	OUTPUT	
SUPPLY FAN START / STOP		X			RT, T
EXHAUST FAN START / STOP		X			RT, T
OUTSIDE AIR DAMPER				X	T
RETURN AIR DAMPER				X	T
SUPPLY FAN SPEED				X	T
EXHAUST FAN SPEED				X	T
OUTSIDE AIR TEMPERATURE			X		T
MIXED AIR TEMPERATURE			X		T
RETURN AIR TEMPERATURE			X		T
SUPPLY DISCHARGE AIR TEMPERATURE			X		T
FILTER STATUS			X		A
SUPPLY AIR STATIC PRESSURE			X		T
EXHAUST AIR STATIC PRESSURE			X		T

ITEM	DIGITAL		ANALOG		LOCAL INTERLOCK	NOTES
	INPUT	OUTPUT	INPUT	OUTPUT		
RETURN AIR SMOKE DETECTOR	X				X	A
SUPPLY FAN STATUS	X					A
EXHAUST FAN STATUS	X					A
OUTSIDE AIR MEASURING STATION AIRFLOW			X			T
SUPPLY AIRFLOW			X			T
EXHAUST AIRFLOW			X			T
DX COOLING OPERATION				X		T
HOT GAS REHEAT COIL OPERATION				X		T
ENERGY RECOVERY WHEEL START/STOP		X				RT, T
ENERGY RECOVERY WHEEL SPEED				X		T
ENERGY RECOVERY BYPASS DAMPER				X		T

NOTE: THE DDC SYSTEM CONTROLLER SHALL SEND A 0-10 VDC SIGNAL TO THE RTU REFRIGERATION SYSTEM CONTROLLER TO ALLOW THE RTU TO MODULATE THE COOLING AND HOT GAS REHEAT COIL OUTPUT.

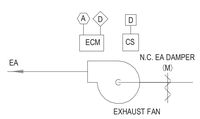

NOTES:
1. CONTROL DIAGRAM SHALL BE TYPICAL FOR THE FOLLOWING FANS:
EF-HS-7
EF-HS-8

EXHAUST FANS EF-HS-7 AND EF-HS-8 POINTS LIST

ITEM	DIGITAL		ANALOG		LOCAL INTERLOCK	NOTES
	INPUT	OUTPUT	INPUT	OUTPUT		
FAN START/STOP		X				RT, T
FAN STATUS	X					A
EXHAUST AIR DAMPER		X				T
FAN SPEED				X		T

D17 ADD ALTERNATE #2 SCIENCE LAB GENERAL EXHAUST FAN CONTROL DIAGRAM
NOT TO SCALE

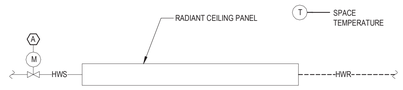

RADIANT CEILING PANEL POINTS LIST

ITEM	DIGITAL		ANALOG		NOTES
	INPUT	OUTPUT	INPUT	OUTPUT	
HEATING CONTROL VALVE				X	T
SPACE TEMPERATURE			X		T, A

D12 CEILING PANEL HEATING RADIATION CONTROL DIAGRAM
NOT TO SCALE

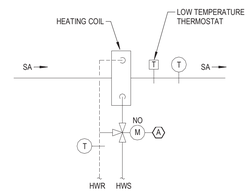

HC-HS-1 BOX POINTS LIST

ITEM	DIGITAL		ANALOG		LOCAL INTERLOCK	NOTES
	INPUT	OUTPUT	INPUT	OUTPUT		
3-WAY MODULATING HEATING CONTROL VALVE (cV RATING = 13.6)				X		T
DISCHARGE AIR TEMPERATURE			X			T
LOW TEMPERATURE THERMOSTAT	X				X	A
HEATING COIL RETURN WATER TEMPERATURE			X			T

D6 HEATING COIL HC-HS-1 CONTROL DIAGRAM
NOT TO SCALE

ARCHITECT

ksqdesign

NEW YORK OKLAHOMA

KSQ Design
215 W 40th Street 15th Floor
New York, NY 10018
646.435.0660 office
www.ksq.design

Owner

Nanuet Union Free School District
103 Church St, Nanuet, NY 10954
845.627.9880 office
http://www.nanuetsd.org/

Structural Engineer

Clapper Structural Engineering
160 Partition Street
Saugerties, NY 12477
845.943.9601
www.clapperstructural.com

MEP Engineer

Sage Engineering Associates, LLP
9 Columbia Circle
Albany NY 12203
518.453.6091 office
518.453.6092 fax
www.sagellp.com

Civil Engineer

LaBella Associates
4 British American Blvd.
Latham, NY 12110
518.266.7323
www.labellapc.com

Environmental Engineer

Green Path Environmental
79 Glover Street, Suite 1
Staten Island, NY 10308
347.276.2339
www.gpe.nyc

Construction Manager

Jacobs
One Penn Plaza
54th Floor, Suite 5420
New York, NY 10119
646.908.6550
www.jacobs.com

STATE OF NEW YORK · JOHN VENDITTI · 083994 · LICENSED PROFESSIONAL ENGINEER

NANUET

NANUET SENIOR HIGH SCHOOL

SED #: 50-01-08-03-0-003-034

103 Church St, Nanuet, NY 10954

N

REVISIONS

No.	Description	Date
1	BID ADDENDUM 1	01/10/23

ISSUED: BID SET ISSUANCE
DATE: DECEMBER 15, 2022
SCALE: NOT TO SCALE
SHEET NAME:
CONTROL DIAGRAMS

SHEET NUMBER:
HS-M603

ISSUE FOR BID SET

DRAWN BY: Author
CHECKED BY: Checker
Checker Stamp
C:\Users\Public\Documents\WAIKLIT-HS-MECH_Union\HS737.rvt
1/10/2023 2:56:34 PM

PROJECT NUMBER: 2111005.00 COPYRIGHT © 2014 KSQ ARCHITECTS, PC