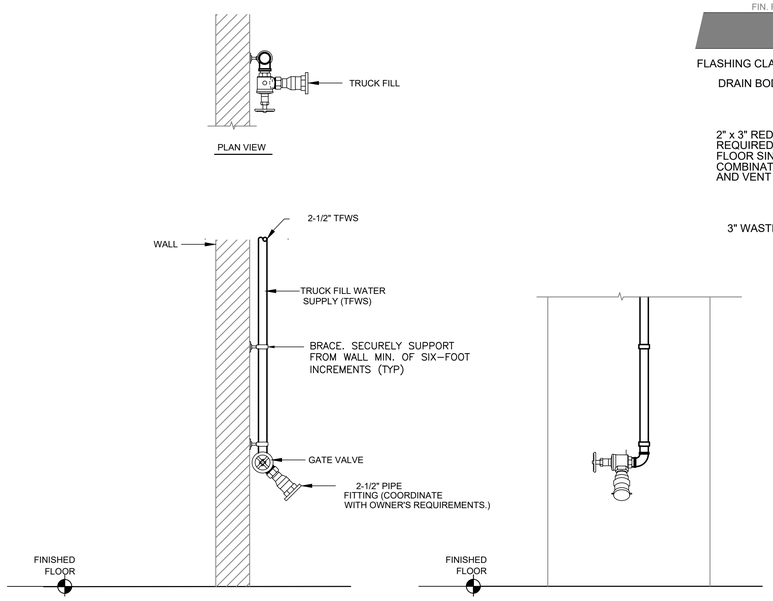

TRUCK FILL WALL HYDRANT DETAIL

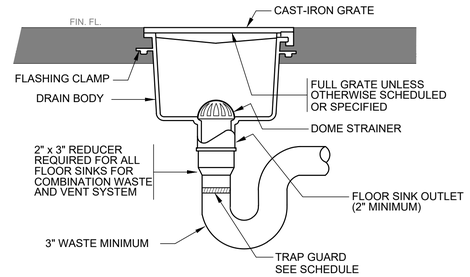

FLOOR SINK DETAIL

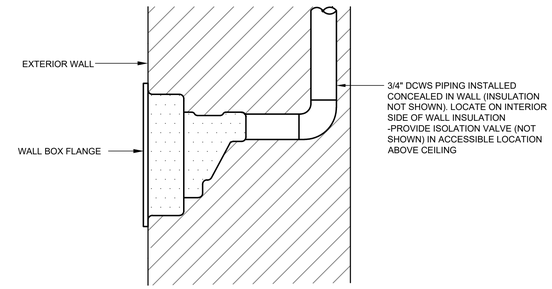

FREEZEPROOF WALL HYDRANT

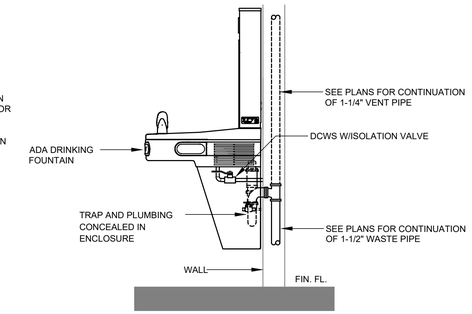

NOTES:

1. SEE ARCH. PLANS FOR FIXTURE MOUNTING HEIGHTS.
2. INSTALL IN ACCORDANCE WITH MANUFACTURER'S INSTRUCTIONS.

WALL-HUNG DRINKING FOUNTAIN DETAIL

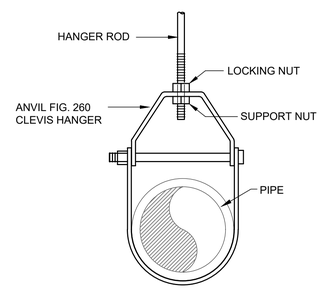

CLEVIS HANGER

- PIPE WITH NO INSULATION -

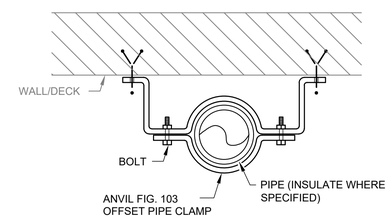

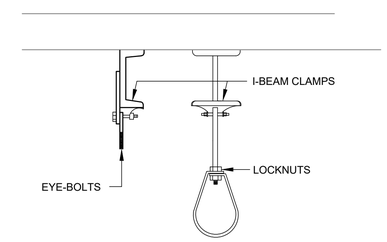

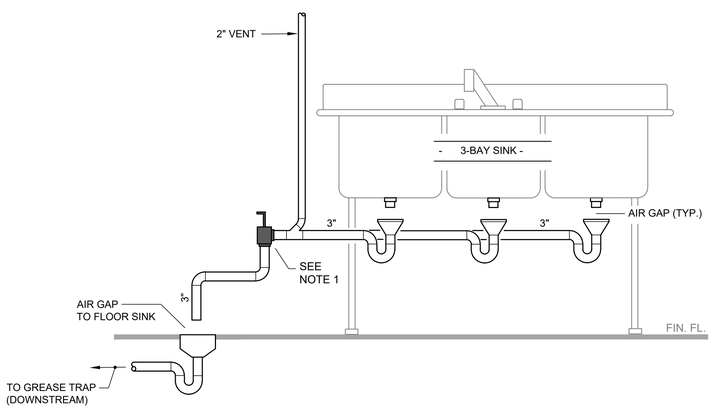

NOTES:

1. PROVIDE ANGLED FLOW CONTROL FITTING, ZURN MODEL Z1108-L. CENTERLINE OF FITTING SHALL BE INSTALLED AT A MAXIMUM OF 9-INCHES BELOW SINK BASIN.

THREE-BAY SINK INSTALLATION DETAIL

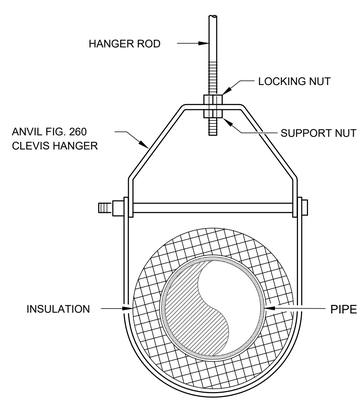

CLEVIS HANGER

- PIPE WITH EXTERNAL INSULATION -

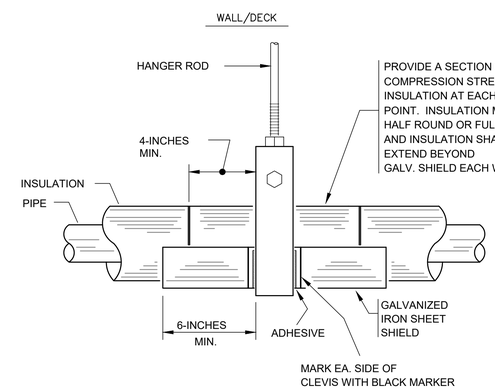

CLEVIS HANGER

- PIPE WITH EXTERNAL INSULATION -

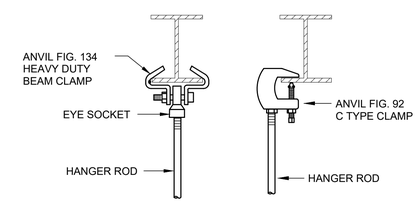

STEEL BEAM

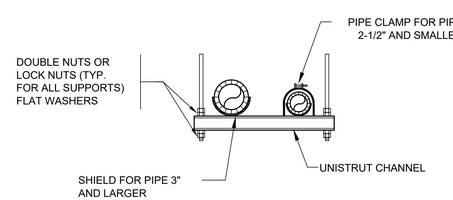

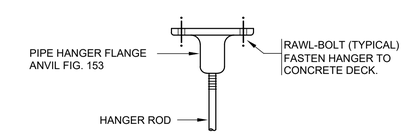

DECK

TYPICAL PIPE SUPPORT DETAILS

BID PLANS

WARNING -- IT IS A VIOLATION OF NEW YORK EDUCATION LAW SECTION 7209.2, FOR ANY PERSON, UNLESS HE IS ACTING UNDER THE DIRECTION OF A LICENSED PROFESSIONAL ENGINEER OR LAND SURVEYOR, TO ALTER THIS DOCUMENT IN ANY WAY. - IF ALTERED THE ALTERED PERSON SHALL COMPLY WITH THE REQUIREMENTS OF NEW YORK EDUCATION LAW SECTION 7209.2.

DATE: 06/21/2023
DRAWN BY: AOS
SCALE: N.T.S.
REVIEWED BY: TJH
PROJECT NO.: 20-2006
FILE:

HESNOR ENGINEERING & ASSOCIATES
WWW.HESNOR.COM
KEYSTONE ASSOCIATES ARCHITECTS, PLLC
WWW.KEYSTONE-AA.COM
DELAWARE ENGINEERING, D.P.C.
CIVIL AND ENVIRONMENTAL ENGINEERING
WWW.DELAWAREENGINEERING.COM

REVISIONS

NO.	DATE	DESCRIPTION

PORT EWEN FIRE DEPARTMENT, ULSTER, NEW YORK

PLUMBING DETAILS

SHEET: P502