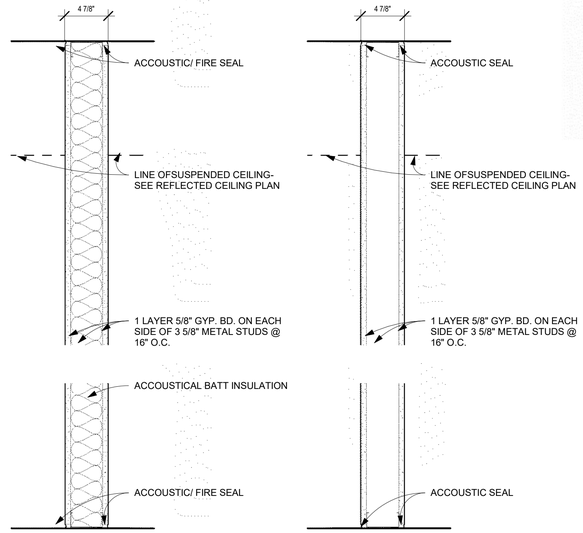

1 1 HOUR G.W.B.
STC 56 - U.L. DES U422

2 G.W.B.

1 PARTITION TYPES

1 1/2" = 1'-0"

STUDS TO BE 22 GA U.O.N.

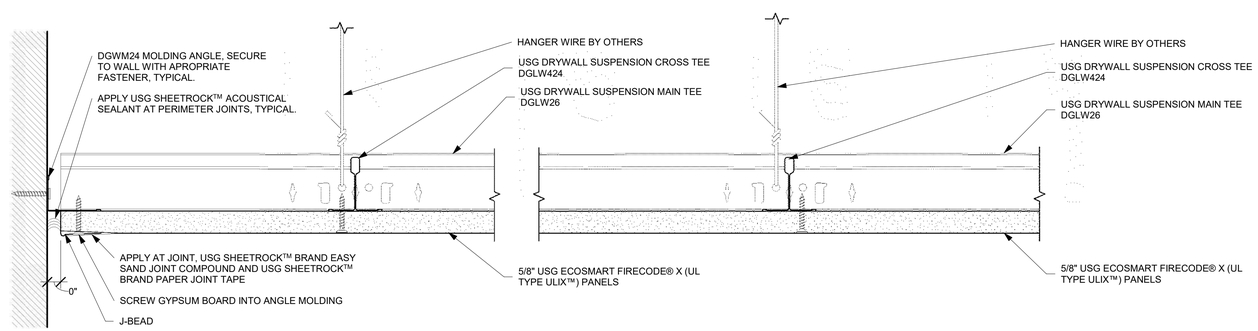

2 SUSP GYP CLG

6" = 1'-0"

sto

Sto HI-CM-180 EIFS
Large and Small Missile Hurricane Impact Resistant System
Miami-Dade County NOA # 15-0226.03 Expires: 05/21/2020

Detail No.: 10H.13
Date: April 2017

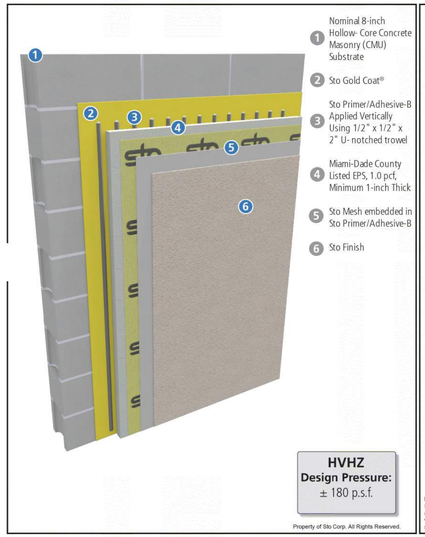

Property of Sto Corp. All Rights Reserved.

Notes:

1. Comply with written requirements presented in official Notice of Acceptance available at www.stocorp.com and www.miamidade.gov.

2. Materials deemed equivalent or better may be substituted based on analysis by a qualified engineer and/or at the discretion of the local code official in locations outside of the High Velocity Hurricane Zone (Dade and Broward Counties).

3. Refer to Sto specific tions and product bulletins for detailed information on mixing and application of products.

IMPORTANT: Components not identified as Sto are furnished by other manufacturers and are not necessarily installed by trades who install the Sto products. Refer to project specific contract documents.

www.stocorp.com

ATTENTION

Sto products are intended for use by qualified professional contractors, not consumers, as a component of a larger construction assembly as specified by a qualified design professional, general contractor or builder. They should be installed in accordance with those specifications and Sto's instructions. Sto Corp. disclaims all, and assumes no, liability for on-site inspections, for its products applied improperly, or by unqualified persons or entities, or as part of an improperly designed or constructed building, for the nonperformance of adjacent building components or assemblies, of for other construction activities beyond Sto's control. Improper use of Sto products or use as part of an improperly designed or constructed larger assembly or building may result in serious damage to Sto products, and to the structure of the building or its components.

STO CORP. DISCLAIMS ALL WARRANTIES EXPRESSED OR IMPLIED EXCEPT FOR EXPLICIT LIMITED WRITTEN WARRANTIES ISSUED TO AND ACCEPTED BY BUILDING OWNERS IN ACCORDANCE WITH STO'S WARRANTY PROGRAMS WHICH ARE SUBJECT TO CHANGE FROM TIME TO TIME. For the fullest, most current information on proper application, clean-up, mixing and other specifications and warranties, cautions and disclaimers, please refer to the Sto Corp. website, www.stocorp.com.

Berg+Moss Architects
BMA

BERG + MOSS ARCHITECTS PC
THE BEACON BUILDING
473 MAIN STREET No. 1
BEACON, NY 12508
T: 845 831 1318
INFO@BERGMOSS.COM

STRUCTURAL/ CIVIL ENGINEERS
COLLIERS ENGINEERING & DESIGN
555 Hudson Valley Ave, Ste 101
New Windsor, NY 12553

MECHANICAL ENGINEERS
LEGACY ENGINEERS
1001 Avenue of the Americas, 20th Floor
New York, NY 10018

c 2014 Berg + Moss Architects, PC

No.	Description	Date
1	ISSUED FOR BID	11/3/23

THESE CAD FILES MAY NOT BE USED, DUPLICATED, MODIFIED OR CHANGED IN ANY MANNER WITHOUT THE WRITTEN CONSENT OF BERG + MOSS ARCHITECTS PC. THE USER AND ITS AGENTS WILL BE LIABLE FOR ANY UNAUTHORIZED USE, DUPLICATION, MODIFICATION OR CHANGE.

SPRING VALLEY VILLAGE

SPRING VALLEY POLICE LOCKER UPGRADES

DRAWING TITLE
PARTITION TYPES

DRAWING NO.
A-900.00

SEAL & SIGNATURE

ISSUE DATE: 9-27-23
SCALE: As indicated
DWG BY: Author
CHK BY: Checker

JOB NUMBER
-