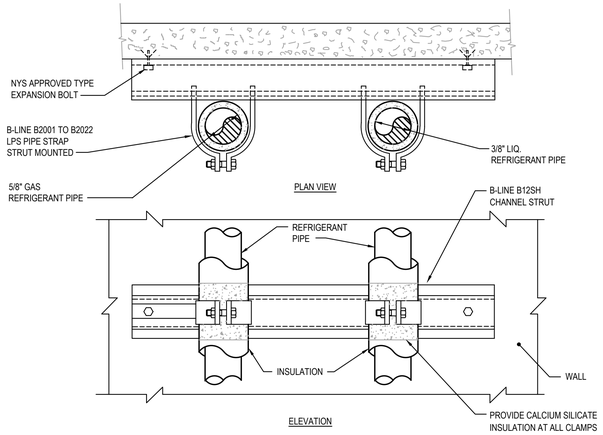

NOTE:

THE INSTALLATION AND SPACING OF PIPE SUPPORTS SHALL BE IN COMPLIANCE WITH SECTION MC 305 OF THE NYS MECHANICAL CODE.
MAXIMUM PIPE SIZE FOR THIS SUPPORT IS 8"

VERTICAL PIPE RISERS SUPPORT DETAIL

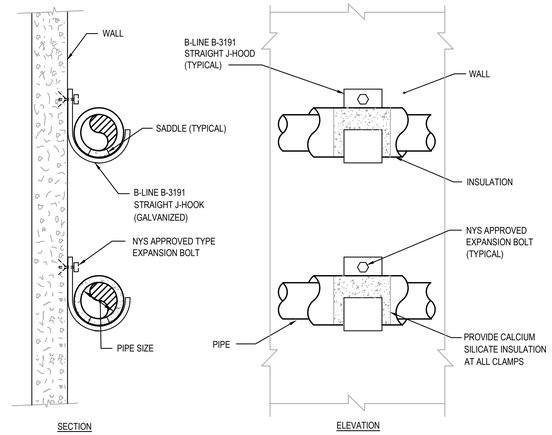

NOTE:

THE INSTALLATION AND SPACING OF PIPE SUPPORTS SHALL BE IN COMPLIANCE WITH SECTION MC 305 OF THE NYS MECHANICAL CODE.

MAXIMUM PIPE SIZE FOR THIS SUPPORT IS 8".

HORIZONTAL PIPE SUPPORT FROM WALL

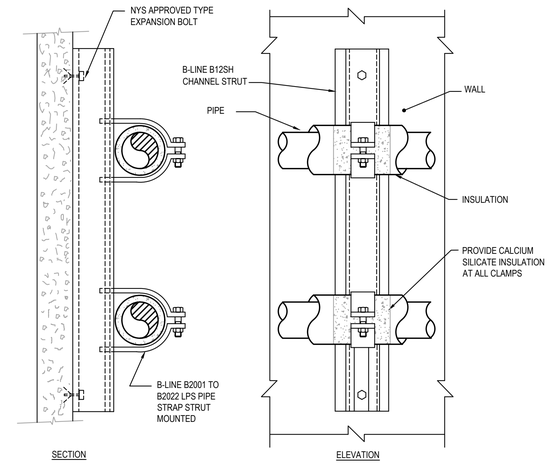

NOTE:

THE INSTALLATION AND SPACING OF PIPE SUPPORTS SHALL BE IN COMPLIANCE WITH SECTION MC 305 OF THE NYS MECHANICAL CODE.
MAXIMUM PIPE SIZE FOR THIS SUPPORT IS 8"

HORIZONTAL PIPE SUPPORT FROM WALL

NOTES:

1. REFER TO ARCHITECTURAL OR STRUCTURAL DRAWINGS FOR FRAMING LOCATIONS AND SPECIFICATIONS.
2. REFER TO ARCHITECTURAL DRAWINGS FOR FINISH DETAILS.
3. PREFABRICATED EQUIPMENT SUPPORTS SHALL BE DAIKIN MODEL DACA-WB-3 OR APPROVED EQUAL

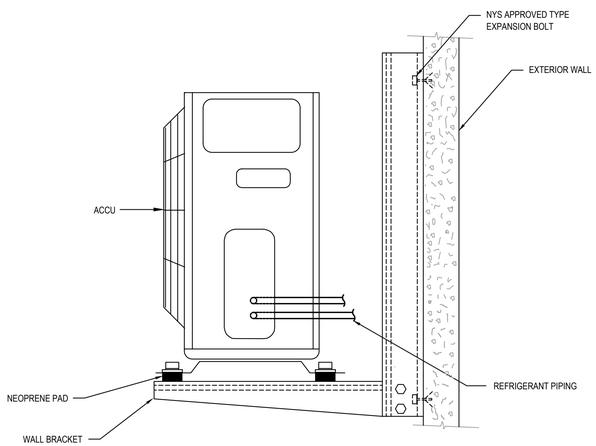

SMALL ACCU INSTALLATION DETAIL

SCALE: NTS

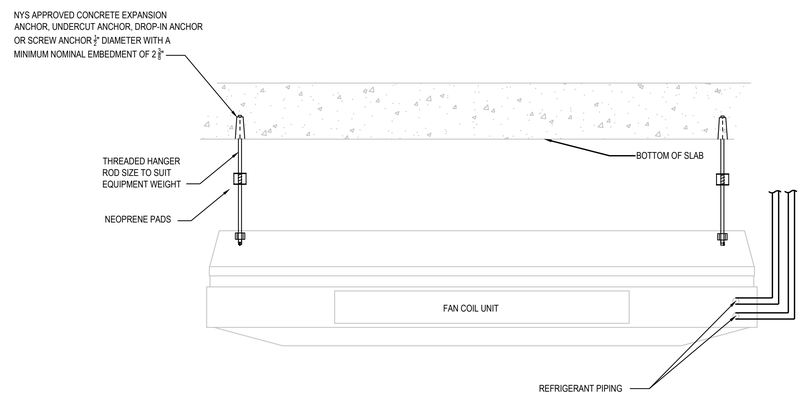

CEILING MOUNTED FAN COIL UNIT DETAIL

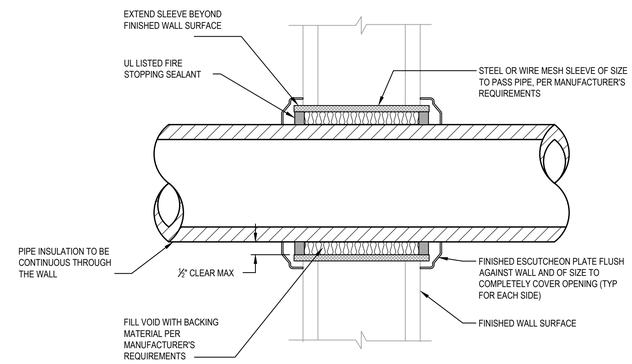

TYPICAL DETAIL OF PIPE THRU RATED WALL

Berg+Moss Architects
BMA

BERG + MOSS ARCHITECTS PC
THE BEACON BUILDING
473 MAIN STREET No. 1
BEACON, NY 12508
T: 845 831 1318
INFO@BERGMOSS.COM

STRUCTURAL/ CIVIL ENGINEERS
Colliers
COLLIERS ENGINEERING & DESIGN
555 Hudson Valley Ave, Ste 101
New Windsor, NY 12553

MECHANICAL ENGINEERS
LEGACY ENGINEERS
498 Seventh Avenue, 17th Floor South
New York, NY 10018

No.	Description	Date
1	ISSUED FOR BID	11/03/23

SPRING VALLEY VILLAGE

SPRING VALLEY POLICE LOCKER UPGRADES

DRAWING TITLE
MECHANICAL DETAILS

DRAWING NO.
M-601.00

SEAL & SIGNATURE

ISSUE DATE:	9-27-23
SCALE:	NTS
DWG BY:	DWN
CHK BY:	CHECK

JOB NUMBER
23025-00