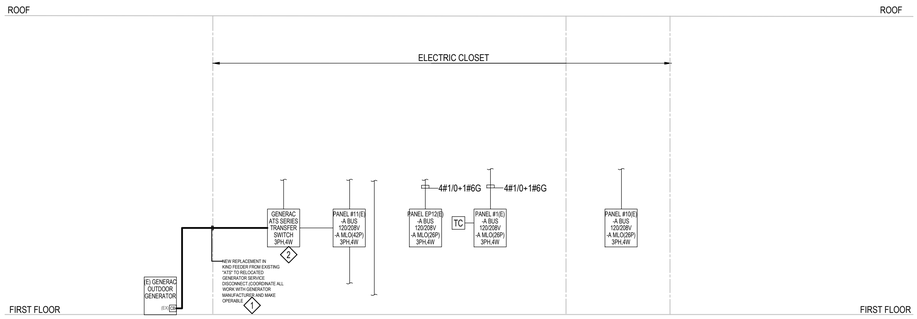

PARTIAL EXISTING SPRING VALLEY - POWER RISER DIAGRAM

NTS

NOTES:

1. ELECTRICAL CONTRACTOR SHALL UTILIZE SAME/SIMILAR PATHWAY PRESENTLY BEING USED TO FEED RELOCATED GAS GERERAC GENERATOR WHERE POSSIBLE. ALL NEW WORK ASSOCIATED WITH REPLACING EXISTING GENERATOR FEEDER TO NEW LOCATION SHALL BE PART OF THIS BID DOCUMENT.
2. PROVIDE ALL REQUIRED WORK ASSOCIATED WITH COMMISSIONING AND REPROGRAMMING EXISTING "ATS" .

RISER SYMBOL:

- EXISTING CONDUIT TO BE REMOVED
- EXISTING EQUIPMENT TO REMAIN
- NEW CONCEALED CONDUIT
- EXISTING CONDUIT TO REMAIN

Berg+Moss Architects
BMA

BERG + MOSS ARCHITECTS PC
THE BEACON BUILDING
473 MAIN STREET No. 1
BEACON, NY 12508
T: 845 831 1318
INFO@BERGMOSS.COM

STRUCTURAL/ CIVIL ENGINEERS
COLLIERS ENGINEERING & DESIGN
555 Hudson Valley Ave, Ste 101
New Windsor, NY 12553

MECHANICAL ENGINEERS
LEGACY ENGINEERS
498 Seventh Avenue, 17th Floor South
New York, NY 10018

No.	Description	Date
1	ISSUED FOR BID	11/03/23

SPRING VALLEY POLICE LOCKER UPGRADES

DRAWING TITLE
ELECTRICAL SINGLE LINE DIAGRAM

DRAWING NO.
E-400.00

SEAL & SIGNATURE

ISSUE DATE:	9-27-23
SCALE:	NTS
DWG BY:	DWN
CHK BY:	CHECK

JOB NUMBER
23025-00