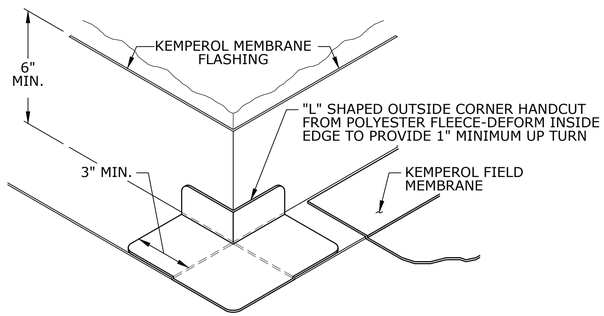

B3 FIELD FABRICATED OUTSIDE CORNER FLASHING

N.T.S.

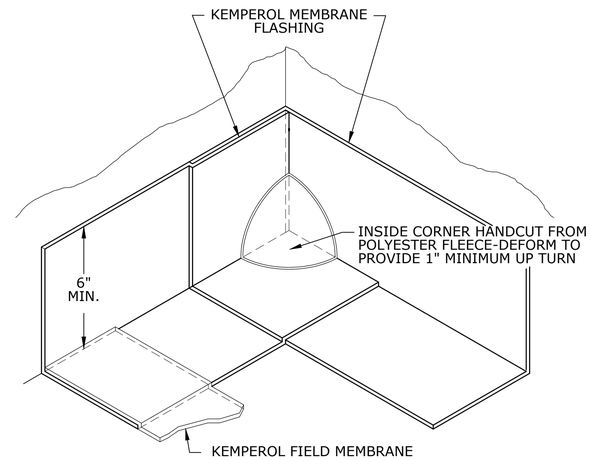

B2 FIELD FABRICATED INSIDE CORNER FLASHING

N.T.S

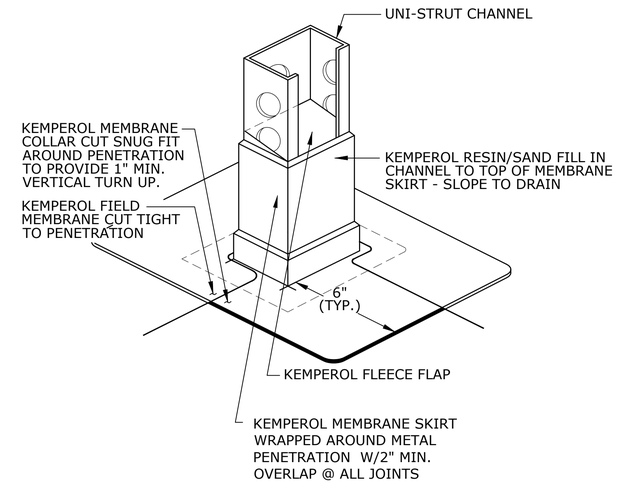

B1 IRREGULAR PENETRATION FLASHING

N.T.S

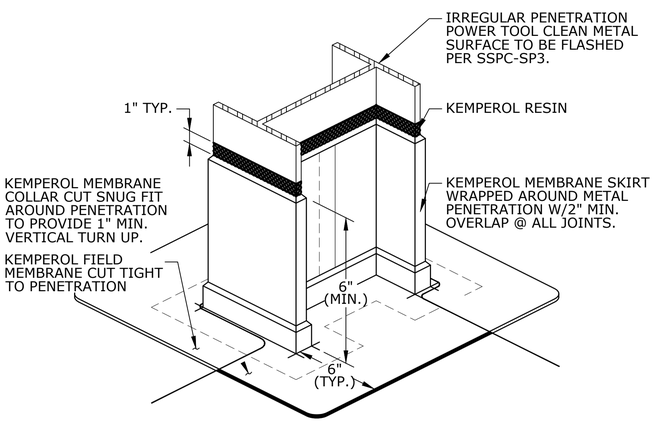

A3 IRREGULAR PENETRATION WIDE FLANGE FLASHING

N.T.S.

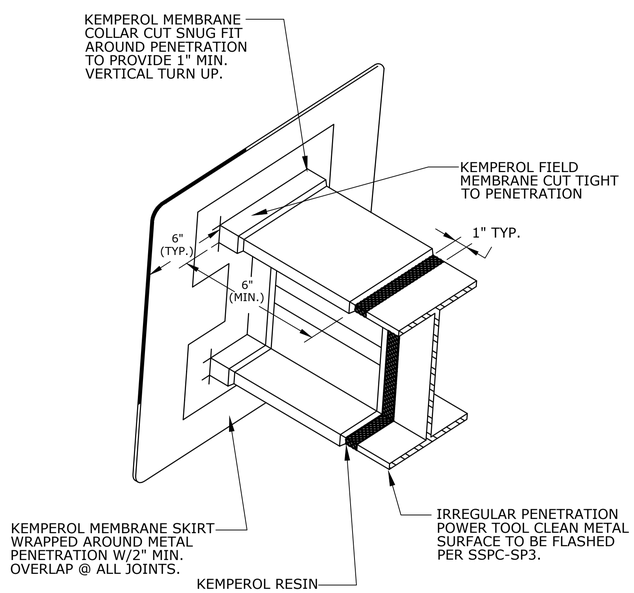

A2 IRREGULAR PENETRATION WIDE FLANGE FLASHING

N.T.S

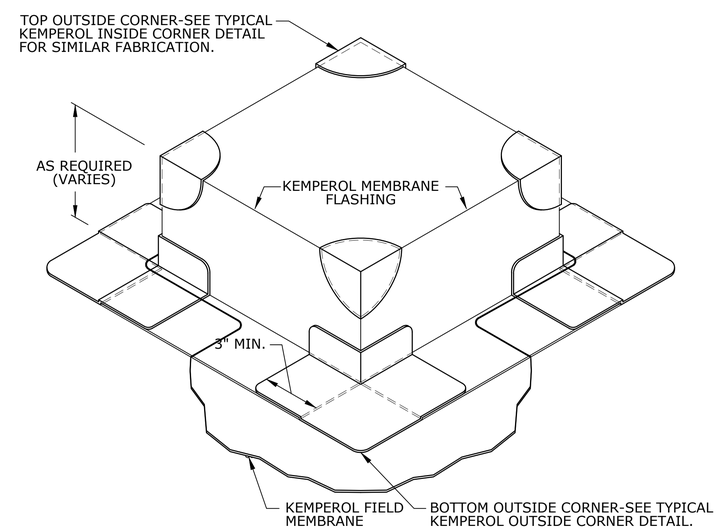

A1 CURB/PAD ENCAPSULATION FLASHING

N.T.S

EASTONARCHITECTS
20 WEST 44TH STREET, SUITE 604
NEW YORK, NY 10036
212-779-9570 TEL

OWNERSHIP AND USE OF DOCUMENTS:

DRAWINGS AND SPECIFICATIONS AS INSTRUMENTS OF PROFESSIONAL SERVICE ARE AND SHALL REMAIN THE PROPERTY OF THE ARCHITECT. THESE DOCUMENTS ARE NOT TO BE USED IN WHOLE OR IN PART, FOR ANY OTHER PROJECTS OR PURPOSES, OR BY ANY OTHER PARTIES, THAN THOSE PROPERLY AUTHORIZED BY CONTRACT, WITHOUT THE SPECIFIC WRITTEN AUTHORIZATION OF EASTON ARCHITECTS, LLP.

No.	REVISIONS / SUBMISSIONS	Date
	ISSUE FOR BID	10/31/22
	ISSUE FOR OWNER REVIEW	09/07/22

PROJECT

HASTINGS-ON-HUDSON VILLAGE HALL

PHASE 3: ROOF REPLACEMENT AND REPAIRS

7 MAPLE AVE, HASTINGS ON HUDSON, NY 10706

ROOF WATERPROOFING DETAILS

SEAL & SIGNATURE

DATE:	10/31/22
PROJECT No:	2118
DRAWING BY:	AD
CHK BY:	TT
DWG No:	A-405.00