HS EXTENSION BOILER REPLACEMENT

NORTH ROCKLAND
HIGH SCHOOL EXTENSION
SED NO. 50-02-01-06-0-007-016
65 Chapel St
Garnerville, NY 10923

OWNER:
North Rockland Central School District
65 Chapel St
Garnerville, NY 10923

ARCHITECT:
MICHAEL SHILALE ARCHITECTS, LLP
140 Park Avenue
New City, NY 10956

PME ENGINEER:
GREENMAN-PEDERSEN, INC.
400 Rella Boulevard
Montebello, NY 10901

MATERIALS LEGEND

- CONCRETE MASONRY UNIT
- BRICK
- RIGID INSULATION
- CONCRETE
- GRAVEL OR STONE
- EARTH
- EIFS
- ASPHALT PAVING
- SAND/MORTAR/GYPSUM BOARD
- STEEL
- ACT
- ROUGH WOOD
- BRONZE

LIST OF DRAWINGS

DRAWING No.	DRAWING TITLE	DATE
A-000	COVER SHEET	06-18-24
A-001	SCHEDULES, LEGENDS AND NOTES	05-31-24
B-100	CODE ANALYSIS	05-31-24
EN-001	ENERGY CODE COMPLIANCE	05-31-24
AA-000	ABATEMENT NOTES	05-31-24
AA-100	PROPOSED BOILER ROOM ACM PLAN	05-31-24
AA-200	ROOF ABATEMENT PLAN	05-31-24
T-100	OIL TANK SITE PLAN	05-31-24
C-101	SITE PLAN	05-31-24
C-501	SITE PLAN DETAILS	05-31-24
D-101	BOILER ROOM DEMO PLAN	05-31-24
A-101	PROPOSED BOILER ROOM PLAN	05-31-24
A-102	BOILER ROOM ROOF PLAN	05-31-24
M-001	MECHANICAL GENERAL NOTES	05-31-24
M-002	MECHANICAL SCHEDULES	05-31-24
M-003	MECHANICAL SYMBOLS AND ABBREVIATIONS	05-31-24
MD-101	MECHANICAL BOILER ROOM PLAN – REMOVAL	06-18-24
MD-102	MECHANICAL ROOF PLAN – REMOVAL	05-31-24
MD-103	MECHANICAL PARTIAL SITE PLAN – REMOVAL	06-18-24
M-101	MECHANICAL BOILER ROOM PLAN – INSTALL	06-18-24
M-102	MECHANICAL ROOF PLAN – INSTALL	05-31-24
M-301	MECHANICAL PIPING DIAGRAM	06-18-24
M-401	MECHANICAL CONTROL DIAGRAM	05-31-24
M-501	MECHANICAL DETAILS	05-31-24
M-502	MECHANICAL DETAILS – 2	06-18-24
M-503	MECHANICAL DETAILS – 3	05-31-24
E-001	ELECTRICAL NOTES AND SYMBOLS	05-31-24
ED-101	ELECTRICAL DEMOLITION PLAN	05-31-24
E-101	ELECTRICAL INSTALLATION PLAN	05-31-24
E-501	ELECTRICAL DETAILS	05-31-24

0 1/2 1
IF THIS BAR DOES NOT MEASURE 1, THEN DRAWING IS NOT TO FULL SCALE

ABBREVIATIONS

ACT	ACOUSTICAL CEILING TILE
A.F.F.	ABOVE FINISH FLOOR
ASPH	ASPHALT
BLK	BLOCK
BLK'G	BLOCKING
BUR	BUILT UP ROOFING
CLG	CEILING
CMP	CORRUGATED METAL PIPE
CONC	CONCRETE
CONT	CONTINUOUS
C.J.	CONTROL JOINT
DN	DOWN
DIA	DIAMETER
DWG	DRAWING
E.F.	EACH FACE
EIFS	EXTERIOR INSULATION AND FINISH SYSTEM
E.W.	EACH WAY
E.W.C.	ELECTRICAL WATER COOLER
EL	ELEVATION
ELC	ELECTRICAL CONTRACTOR
EXIST	EXISTING
EXP	EXPANSION
EXT'G	EXISTING
EXTR	EXTERIOR
FP	FIREPROOF
FIN.	FINISH(ED)
GA	GAUGE
GC	GENERAL CONTRACTOR
GALV	GALVANIZED
GL	GLASS
GWB	GYPSUM WALL BOARD
HDPE	HIGH DENSITY POLYETHYLENE
HM	HOLLOW METAL
H.P.	HIGH POINT
HAC	HEATING & A/C CONTRACTOR
ITR	INDIVIDUAL TREATMENT ROOM
JT	JOINT
LAM	LAMINATE
LAV	LAVATORY
LP	LOW POINT
MAX	MAXIMUM
MFR	MANUFACTURER
MTL	METAL
MIN	MINIMUM
MO	MASONRY OPENING
N.I.C.	NOT IN CONTRACT
NO.	NUMBER
OC	ON CENTER
OPN'G	OPENING
PBC	PLUMBING CONTRACTOR
PLAS.LAM.	PLASTIC LAMINATE
PL	PLATE
PLY'D	PLYWOOD
RAD	RADIUS
REF.CLG.	REFLECTED CEILING
REQ'D	REQUIRED
RO	ROUGH OPENING
SIM	SIMILAR
S.P.	STARTING POINT
STL	STEEL
SUSP.CLG.	SUSPENDED CEILING
T.O.M.	TOP OF MASONRY
T.O.S.	TOP OF STEEL
TYP	TYPICAL
U.O.N.	UNLESS OTHERWISE NOTED
V.I.F.	VERIFY IN FIELD
VCT	VINYL COMPOSITE TILE
W/	WITH
WD	WOOD

SYMBOLS LEGEND

- DOOR NUMBER
- KEY NOTE
- PARTITION TYPE
- REVISION NUMBER
- WINDOW TYPE
- MECHANICAL EQUIPMENT
- EXISTING PARTITION
- EXISTING PARTITION TO BE REMOVED
- NEW PARTITION (SEE PARTITION LEGEND A-101)
- NEW DOOR
- EXISTING DOOR
- EXISTING DOOR TO BE REMOVED
- EXISTING WINDOW
- NEW WINDOW
- OFFICE / 100 SF / 101 — ROOM NAME; ROOM NAME/ NUMBER IDENTIFICATION; ROOM NUMBER; ROOM AREA
- 1 / A-100 — DRAWING NUMBER; WALL SECTION/ ELEVATION REFERENCE; SHEET NUMBER
- 1 / A-100 — DETAIL NUMBER; DETAIL REFERENCE; SHEET NUMBER
- 1 — COLUMN LINE DESIGNATION
- 811 — CALL BEFORE YOU DIG

GENERAL NOTES

1. ALL PLAN DIMENSIONS ARE NOMINAL U.O.N. DIMENSIONS TO THE FINISHED FACE OF AN ELEMENT OR WALL WILL BE DESIGNATED WITH AN "F" AS SHOWN
2. G.C. TO VERIFY ALL DIMENSIONS IN THE FIELD AND IS TO NOTIFY ARCHITECT IF THERE ARE ANY DISCREPANCIES

ALTERNATES/ALLOWANCES

ALT. NO. 1:
REMOVE AND REPLACE 2 NEW HOT WATER PAD-MOUNTED PUMPS AND INSTALL ON EXISTING HOUSEKEEPING PADS. PUMPS TO BE PROVIDED BY OWNER

ALT. NO. 2:
NOT USED

ALT. NO. 3:
HVAC CONTRACTOR TO PERFORM EXISTING BOILER DEMOLITION AND ABATEMENT

UNIT PRICES

IT IS A VIOLATION OF THE LAW FOR ANY PERSON, UNLESS ACTING UNDER THE DIRECTION OF A LICENSED ARCHITECT, TO ALTER AN ITEM IN ANY WAY.

No.	Date	Revisions
2	06-18-24	REVISIONS
1	05-31-24	BIDDING DOCUMENTS

REG. EXP DATE: 06-30-24

Drawn by	DE
Checked by	MS/JC
Project No.	44023
Scale	AS NOTED
Date	05-08-24

Mechanical & Electrical Engineer:

Structural Engineer:

NORTH ROCKLAND HIGH SCHOOL EXTENSION BOILER REPLACEMENT
SED# 50-02-01-06-0-007-016
65 CHAPEL STREET GARNERVILLE, NY 10923
COUNTY OF ROCKLAND

MICHAEL SHILALE ARCHITECTS, L.L.P.
140 Park Avenue New City, NY 10956 Tel 845-708-9200
www.shilale.com

© COPYRIGHT, MICHAEL SHILALE ARCHITECTS LLP, ALL RIGHTS RESERVED.

Drawing Title: **COVER SHEET**

Drawing No. **A-000**

1. ALL SOIL EROSION AND SEDIMENT CONTROL PRACTICES SHALL BE INSTALLED IN ACCORDANCE WITH THE NEW YORK STANDARDS AND SPECIFICATIONS FOR EROSION AND SEDIMENT CONTROL, AND SHALL BE INSTALLED IN PROPER SEQUENCE AND MAINTAINED UNTIL PERMANENT STABILIZATION IS ESTABLISHED.

2. THE SITE AT ALL TIMES SHALL BE GRADED AND MAINTAINED SUCH THAT ALL STORMWATER RUNOFF IS DIVERTED TO SOIL EROSION AND SEDIMENT CONTROL FACILITIES.

3. THE CONTRACTOR IS RESPONSIBLE FOR MAINTAINING AND INSPECTING ALL SOIL EROSION AND SEDIMENT CONTROL MEASURES ON A REGULAR BASIS, INCLUDING AFTER EVERY STORM EVENT.

4. STOCKPILES ARE NOT TO BE LOCATED WITHIN A FLOODPLAIN, BUFFER, ON A SLOPE, ROADWAY OR DRAINAGE FACILITY. THE BASE OF ALL STOCKPILES SHALL BE CONTAINED BY A HAY BALE SEDIMENT BARRIER OR SILT FENCE.

5. ALL SOIL WASHED, DROPPED, SPILLED, OR TRACKED OUTSIDE THE WORK AREA OR ONTO PUBLIC RIGHT-OF-WAY, SHALL BE REMOVED ALL SOIL WASHED, DROPPED, SPILLED, OR TRACKED OUTSIDE THE WORK AREA OR ONTO PUBLIC RIGHT-OF-WAY, SHALL BE REMOVED IMMEDIATELY. PAVED ROADWAYS MUST BE KEPT CLEAN AT ALL TIMES.

6. DUST SHALL BE CONTROLLED AT ALL TIMES IN ACCORDANCE WITH THE NEW YORK STANDARDS AND SPECIFICATIONS FOR EROSION DUST SHALL BE CONTROLLED AT ALL TIMES IN ACCORDANCE WITH THE NEW YORK STANDARDS AND SPECIFICATIONS FOR EROSION AND SEDIMENT CONTROL.

7. TREES TO REMAIN AFTER CONSTRUCTION WITHIN THE WORK AREA SHALL BE PROTECTED WITH A SUITABLE FENCE INSTALLED AT THE DRIP LINE OR BEYOND IN ACCORDANCE WITH THE NEW YORK STANDARDS AND SPECIFICATIONS FOR EROSION AND SEDIMENT CONTROL.

8. TEMPORARY SEDIMENTATION ENTRAPMENT AREAS SHALL BE PROVIDED AT KEY LOCATIONS TO INTERCEPT AND CLARIFY SILT LADEN RUNOFF FROM THE SITE. THESE MAY BE EXCAVATED OR MAY BE CREATED UTILIZING EARTHEN BERMS, RIP-RAP OR CRUSHED STONE DAMS, HAY BALES, OR OTHER CHANNELIZATION SHALL BE CONSTRUCTED TO INSURE THAT ALL SILT LADEN WATERS ARE DIRECTED INTO THE ENTRAPMENT AREAS, WHICH SHALL NOT BE PERMITTED TO FILL IN, BUT SHALL BE CLEANED PERIODICALLY DURING THE COURSE OF CONSTRUCTION. THE COLLECTION SILT SHALL BE DEPOSITED IN AREAS SAFE FROM FURTHER EROSION.

9. ALL DISTURBED AREAS, EXCEPT ROADWAYS, WHICH WILL REMAIN OPEN OR UNFINISHED FOR MORE THAN 10 DAYS SHALL BE TEMPORARILY SEEDED WITH 1/2 LB. OF RYE GRASS OR MULCHED WITH 100 LBS. OF STRAW OR HAY PER 1,000 SQUARE FEET. ROADWAYS SHALL BE STABILIZED AS RAPIDLY AS PRACTICABLE BY THE INSTALLATION OF THE BASE COURSE. A TEMPORARY SEEDING AND/ OR MULCHING SHOULD BE APPLIED TO DISTURBED AREAS THAT ARE LEFT FOR 15 DAYS UNLESS CONSTRUCTION WILL BEGIN WITHIN 30 DAYS.

10. SILT THAT LEAVES THE SITE SHALL BE COLLECTED AND REMOVED AS DIRECTED BY THE VILLAGE OF WEST HAVERSTRAW. DEPARTMENT OF PUBLIC WORKS.

12. AT THE COMPLETION OF THE PROJECT, ALL TEMPORARY SILTATION DEVICES SHALL BE REMOVED AND THE AFFECTED AREAS RE-GRADED, PLANTED, OR TREATED IN ACCORDANCE WITH THE APPROVED PLANS.

13. ALL AREAS DISTURBED BY ON-SITE GRADING, THAT WILL NOT BE CONSTRUCTED UPON, SHALL BE STABILIZED WITH VEGETATIVE COVER, USING THE FOLLOWING SEEDING SCHEDULE, OR EQUIVALENT:

	LB. PER ACRE	LB. PER 1,000 SF
KENTUCKY BLUE GRASS –	20	0.45
CREEPING RED FESCUE –	20	0.45
PERENNIAL RYE GRASS –	5	0.10

14. ALL PERMANENTLY SEEDED AREAS TO HAVE AN APPLICATION OF THE FOLLOWING:
LIME – AMOUNT NEEDED TO OBTAIN A pH OF 5.5
FERTILIZER – 15 LBS. PER 1,000 SF OF 10-20-10 FERTILIZER OR APPROVED EQUAL.
IF NOT LANDSCAPED OTHERWISE, ALL NEW CONSTRUCTED PERMANENT SLOPES LESS THAN 1 (VERTICAL) : 2.5 (HORIZONTAL) TO BE SEEDED WITH THE FOLLOWING:

	LB. PER ACRE	LB. PER 1,000 SF
CREEPING RED FESCUE –	10	0.45
CROWN VETCH –	15	0.35
BIRDSFOOT TREFOIL –	8	0.20
TALL FESCUE OR SMOOTH BROMEGRASS –	15	0.35
W/ PERENNIAL RYE GRASS	5	0.10

15. ALL SLOPES GREATER THAN 1 (VERTICAL) : 2.5 (HORIZONTAL) TO BE MULCHED AND STABILIZED WITH CLOTH FABRIC AND PINNED TO THE GROUND.

16. SOD CAN BE USED INSTEAD OF SEED.
CONSTRUCTION SEQUENCE:
a. CONSTRUCT STABILIZED CONSTRUCTION ENTRANCE.
b. INSTALL SEDIMENT BARRIERS AS PER NOTE 1 ABOVE.
c. CONSTRUCT DIVERSIONS SWALES AND DRAINAGE SYSTEMS WITH MINIMUM NECESSARY CLEARING. CONSTRUCT DIVERSIONS SWALES AND DRAINAGE SYSTEMS WITH MINIMUM NECESSARY CLEARING.
d. CLEAR EXISTING TREES AND VEGETATION FROM AREAS TO BE EXCAVATED OR FILLED, STRIP AND STOCKPILE TOPSOIL FROM ALL AREAS TO BE DISTURBED.
e. PERFORM NECESSARY EXCAVATION OR FILL OPERATIONS TO BRING SITE TO DESIRED SUBGRADE. INSTALL STORM DRAINAGE SYSTEM.
f. INSTALL SEDIMENT CONTROL BARRIERS AROUND ALL STORM DRAIN INLETS.
g. SEED ALL DISTURBED AREAS WHICH WILL REMAIN UNDISTURBED FOR A PERIOD OR 30 DAYS AS PER NOTE 2 ABOVE.
h. AFTER COMPLETION OF THE SITE CONSTRUCTION FINE GRADE AND SPREAD TOPSOIL ON ALL LAWN AREAS AND SEED AS PER NOTES 5 AND 6 ABOVE.
i. REMOVE SEDIMENT BARRIERS AS PER NOTE 4 ABOVE.
j. MAINTAIN ALL SEEDED AND PLANTED AREAS TO INSURE A VIABLE STABILIZED VEGETATIVE STATE.

11. ALL CONSTRUCTION TO MEET CURRENT VILLAGE OF WEST HAVERSTRAW SPECIFICATIONS.

12. 4" OF TOP SOIL TO BE SPREAD PRIOR TO SEEDING IN ALL DISTURBED AREAS.

STANDARD EROSION CONTROL NOTES

1. ALL DIMENSIONS ARE MEASURED TO THE ROUGH UNLESS OTHERWISE NOTED. ELEVATIONS AND DIMENSIONS SHOWN ARE FOR GENERAL REFERENCE ONLY. THE CONTRACTOR SHALL VERIFY ALL DIMENSIONS, CONDITIONS, AND ELEVATIONS IN THE FIELD PRIOR TO THE USE OF SUCH INFORMATION IN CONSTRUCTION. THE CONTRACTOR SHALL TAKE ALL FIELD MEASUREMENTS NECESSARY TO ASSURE PROPER FIT OF FINISHED WORK AND SHALL ASSUME FULL RESPONSIBILITY FOR THEIR ACCURACY. NOTIFY THE ARCHITECT IN WRITING IMMEDIATELY OF ANY DIMENSIONAL DISCREPANCIES.

2. THE CONTRACTOR SHALL PERFORM ALL WORK WITH CARE SO THAT ANY MATERIALS WHICH ARE TO REMAIN IN PLACE , OR WHICH ARE TO REMAIN, WILL NOT BE DAMAGED. IF THE CONTRACTOR DAMAGES ANY MATERIALS WHICH ARE TO REMAIN IN PLACE OR WHICH ARE TO REMAIN, THE DAMAGED MATERIALS SHALL BE REPAIRED OR REPLACED IN A MANNER SATISFACTORY TO THE ARCHITECT AT THE EXPENSE OF THE CONTRACTOR.

3. THE SITE SHALL BE KEPT CLEAN AT ALL TIMES. UPON COMPLETION OF WORK, ALL EXCESS MATERIAL, DEBRIS, ETC. SHALL BE REMOVED AND PROPERLY DISPOSED OF AND SHALL BE LEFT CLEAN TO THE ARCHITECT'S SATISFACTION.

4. CONTRACTOR SHALL BE RESPONSIBLE TO OBTAIN AND COMPLY WITH ANY AND ALL PERMITS ASSOCIATED WITH THIS WORK. THE CONTRACTOR SHALL COOPERATE AND ASSIST THE ARCHITECT AND AUTHORIZING AGENCIES IN PERFORMING INSPECTIONS AS REQUIRED.

5. WORK SHALL BE COORDINATED WITH WEATHER CONDITIONS AND PROJECTIONS TO PROTECT COMPLETED AND EXISTING, EXPOSED WORK.

6. NOTIFY ALL APPROPRIATE UTILITIES AND SCHEDULE A PRE-WORK MARK-OUT. WORK CANNOT COMMENCE ON THE PROJECT UNTIL THE SAID "MARK-OUTS" ARE ON THE GROUND AND HAVE BEEN APPROVED AS BEING ON THE ENTIRE SITE, BY THE VILLAGE SUPERINTENDENT OF PUBLIC WORKS.

7. SCHEDULE A PRE-CONSTRUCTION MEETING 48 HOURS PRIOR TO CONSTRUCTION START WITH THE ARCHITECT AND OWNER ON SITE PRIOR TO THE COMMENCEMENT OF THE PROJECT.

8. BROOM SWEEP THE ROAD AND ALL DISTURBED AREAS OF ALL DEBRIS AND EXCESS MATERIAL EACH NIGHT. REPLANT AND RESEED ALL DISTURBED GRASS AREAS TO THE SIMILAR CONDITION THAT EXISTS PRIOR TO CONSTRUCTION AND SHAPE THE AREA TO DRAIN FREELY TOWARDS THE CATCH BASINS. ANY DAMAGE TO THE SURFACE OF THE ROADS OR DRIVEWAYS MUST BE REPAIRED OR REPLACED TO THE EXISTING CONDITIONS, AS DETERMINED AND APPROVED BY THE ARCHITECT AND OWNER.

9. THE CONTRACTOR IS TO PROVIDE ON-SITE "PORTABLE JOHNS" FOR HIS EMPLOYEES, WITHIN WALKING DISTANCE OF THE CONSTRUCTION SITE. THESE DEVICES ARE TO BE REGULARLY SERVICED AND POSITIONED IN SUCH A LOCATION AS TO NOT BE AN ATTRACTIVE NUISANCE TO THE HOMEOWNERS IN THE AREA. APPROVAL OF THE LOCATION OF THESE FACILITIES IS REQUIRED AND WILL BE GIVEN BY THE VILLAGE SUPERINTENDENT OF PUBLIC WORKS. ALTERNATES TO THE PORTABLE JOHNS MAY BE APPROVED BY THE SAID SUPERINTENDENT.

10. CRACK-SEAL THE JOINTS, WITH HOT AC-20 ASPHALTIC TAR, BETWEEN THE EXISTING PAVEMENT AND NEW PAVEMENT SECTION.

11. THE CONTRACTOR SHALL TAKE ALL NECESSARY PRECAUTIONS TO INSURE SOIL EROSION CONTROL, PER NYSDEC GUIDANCE, AND PROTECTION OF THE ADJACENT PROPERTY FROM SOIL/ EARTH RUNOFF, WEATHER OR VANDALISM DURING THIS PERIOD OF CONSTRUCTION. PEDESTRIAN ACCESS TO EACH HOUSE MUST BE MAINTAINED DURING THE DAY ALWAYS AND VEHICULAR ACCESS TO THE INDIVIDUAL DRIVEWAYS IN THE EVENINGS.

12. CURBING TO BE GRADED AS NECESSARY TO PROVIDE POSITIVE DRAINAGE DIRECTED TO CATCH BASINS AND/OR INLETS. MINIMUM SLOPE SHALL BE 1%.

13. ANY CATCH BASINS, CATCH BASIN GRATES OR INLETS DISTURBED OR DAMAGED DURING CONSTRUCTION SHALL BE REMOVED AND REPLACED WITH LIKE KIND BY THE CONTRACTOR AT NO ADDITIONAL COST TO THE VILLAGE.

14. CONTRACTOR SHALL HAND EXCAVATE WITHIN PROXIMITY TO ANY UNDERGROUND UTILITIES.

15. CONTRACTOR SHALL COORDINATE WITH APPROPRIATE UTILITIES AND PROVIDE NECESSARY VALVE/CLEANOUT EXTENSIONS AND/OR NEW COLLARS AS NECESSARY TO BE FLUSH WITH NEW PAVING.

16. CONTRACTOR SHALL LOCATE ALL O/H WIRES AND TAKE ALL NECESSARY PRECAUTIONS TO ENSURE THE SAFETY OF THE GENERAL PUBLIC AND ALL WORKERS.

17. CONTRACTOR SHALL ADJUST CATCH BASIN FRAME AND GRATE AS NECESSARY TO BE FLUSH WITH ADJACENT PAVING AND PROVIDE APPROPRIATE DRAINAGE.

18. CONTRACTOR SHALL REMOVE, STORE AND REINSTALL ALL STREET SIGNS AS NECESSARY FOR COMPLETION OF WORK.

CONSTRUCTION NOTES

1. CONTRACTOR SHALL FIELD VERIFY LOCATION OF ALL EXISTING UTILITIES (PUBLIC AND PRIVATE) IN WORK AREA BY CALLING "DIG SAFELY NEW YORK" 1-800-962-7962, PRIOR TO CONSTRUCTION AND NOTIFY ARCHITECT OF ANY DISCREPANCIES. UTILITIES AND UTILITY FACILITIES THAT ARE UNKNOWN MAY BE AFFECTED BY THE PROPOSED WORK. THE CONTRACTOR IS RESPONSIBLE TO NOTIFY THE OWNER AND ARCHITECT AND MAINTAIN THE UTILITIES IN WORKING ORDER UNTIL THEIR DISPOSITION IS RESOLVED.

2. THE CONTRACTOR SHALL BE RESPONSIBLE FOR THE RELOCATION, PROTECTION AND/OR TEMPORARY SUPPORT OF ANY UTILITIES ENCOUNTERED WITHIN THE WORK AREA.

3. THE CONTRACTOR SHALL COORDINATE DIRECTLY WITH EACH AFFECTED UTILITY COMPANY, SHALL APPLY FOR AND OBTAIN THE NECESSARY PERMITS AND APPROVALS, AND SHALL INITIATE AND COORDINATE ALL INSPECTIONS NECESSARY FOR FINAL APPROVAL AND ACCEPTANCE BY THE SUBJECT UTILITY COMPANY.

4. CONTRACTOR IS RESPONSIBLE FOR MAINTAINING CONTINUOUS SERVICE OF ALL EXISTING UTILITIES WITHIN THE WORK AREA AT ALL TIMES. CONTRACTOR SHALL COORDINATE ANY REPAIR, RELOCATION OR REMOVAL OF EXISTING UTILITIES WITH EACH RESPECTIVE UTILITY COMPANY AND PROVISIONS MUST BE PROVIDED FOR TEMPORARY SERVICE OF ANY RESPECTIVE UTILITY SERVICE AFFECTED BY THE CONSTRUCTION IN THE EVENT OF ANY DISRUPTION TO THE EXISTING UTILITY. SHUT-DOWNS SHALL BE AT THE DISCRETION OF THE RESPECTIVE UTILITY COMPANIES.

5. CONTRACTOR SHALL MAINTAIN ACCESS TO ALL INDIVIDUAL PROPERTIES

UTILITY NOTES

ASPH	ASPHALT
BLK	BLOCK
CMP	CORRUGATED METAL PIPE
CONC	CONCRETE
CONST	CONSTRUCTION
DIA	DIAMETER
DWG	DRAWING
E.W.	EACH WAY
EL	ELEVATION
EXIST	EXISTING
EXT'G	EXISTING
FIN.	FINISH(ED)
GA	GAUGE
GC	GENERAL CONTRACTOR
H.P.	HIGH POINT
JT	JOINT
LP	LOW POINT
MAX	MAXIMUM
MFR	MANUFACTURER
MIN	MINIMUM
MO	MASONRY OPENING
N.I.C.	NOT IN CONTRACT
NO.	NUMBER
O.A.E.	OR APPROVED EQUAL
OC	ON CENTER
OPN'G	OPENING
RAD	RADIUS
RCP	REINFORCED CONCRETE PIPE
REQ'D	REQUIRED
STL	STEEL
TYP	TYPICAL
U.O.N.	UNLESS OTHERWISE NOTED
V.I.F.	VERIFY IN FIELD
W/	WITH

ABBREVIATIONS

1. CONTRACTOR TO VERIFY ALL DIMENSIONS IN THE FIELD AND IS TO NOTIFY ARCHITECT IN WRITING IF THERE ARE ANY DISCREPANCIES.

2. THE CONTRACTOR IS RESPONSIBLE FOR THE REQUIREMENTS OUTLINED IN THE CONTRACT DOCUMENTS. THE WORK SHALL COMPLY WITH THE RULES AND REGULATIONS OF ALL GOVERNMENTAL AGENCIES HAVING JURISDICTION INCLUDING, BUT NOT LIMITED TO, INTERNATIONAL BUILDING CODE, BOCA CODE, STATE UNIFORM CONSTRUCTION CODE, MUNICIPAL CODES AND ORDINANCES, AND FEDERAL, STATE AND LOCAL ENVIRONMENTAL REGULATIONS. CODE REQUIREMENTS SHALL BE CONSIDERED PART OF THESE CONSTRUCTION DOCUMENTS, WHERE CONFLICTS EXIST, THE MORE STRINGENT REQUIREMENT SHALL TAKE PRECEDENCE.

3. THE CONTRACTOR SHALL BE RESPONSIBLE FOR VISITING THE SITE AND FAMILIARIZING THEMSELF WITH THE EXISTING CONDITIONS PRIOR TO WORK.

4. THE CONTRACTOR SHALL BE SOLELY RESPONSIBLE FOR INITIATING, MAINTAINING AND SUPERVISING ALL SAFETY PRECAUTIONS AND SHALL OBSERVE ALL SAFETY REQUIREMENTS ESTABLISHED BY OSHA AND ANY JURISDICTIONAL AGENCIES AND THE OWNER. WHERE CONFLICTS EXIST, THE MORE STRINGENT REQUIREMENTS SHALL APPLY. THESE REQUIREMENTS SHALL APPLY CONTINUOUSLY 24 HOURS PER DAY UNTIL FINAL ACCEPTANCE OF THE WORK BY THE OWNER.

5. THE CONTRACTOR SHALL FURNISH ALL EQUIPMENT THAT MAY BE REQUIRED TO PERFORM THE WORK INDICATED IN A SAFE, ORDERLY, AND PROFESSIONAL MANNER BY EXPERIENCED WORKERS.

6. THE ARCHITECT WILL NOT BE RESPONSIBLE FOR CONSTRUCTION MEANS, METHODS, TECHNIQUES, SEQUENCES, PROCEDURES, SAFETY PRECAUTIONS, NOR FOR THE CONTRACTOR'S FAILURE TO CARRY OUT THE WORK IN ACCORDANCE WITH THE CONTRACT DOCUMENTS.

7. BEFORE WORK IS STARTED, THE CONTRACTOR SHALL SUBMIT TO THE ARCHITECT FOR APPROVAL A LIST OF MATERIALS, WITH TRADE NAMES, PROPOSED TO BE FURNISHED AND SHOP DRAWINGS OR MATERIAL SAMPLES AS REQUESTED BY THE ARCHITECT. SUBMITTALS SHALL BE REPRESENTATIVE OF THE MATERIALS TO BE USED BY THE CONTRACTOR IN COMPLETING HIS WORK.

8. CONTRACTOR IS RESPONSIBLE TO COMPLETE ALL WORK CONTAINED IN THE CONTRACT DOCUMENTS.

9. CONTRACTOR SHALL VERIFY FIELD CONDITIONS WITH OWNER AND ARCHITECT PRIOR TO START OF WORK.

10. THE CONTRACTOR SHALL MAINTAIN AND ENSURE THAT ALL DISTURBED AREAS BE STABILIZED.

GENERAL NOTES

	CONCRETE
	GRAVEL OR STONE
	EARTH
	ASPHALT PAVING
	SEEDED GRASS AREA

MATERIALS LEGEND

0 1/2 1
IF THIS BAR DOES NOT MEASURE 1" THEN DRAWING IS NOT TO FULL SCALE

No.	Date	Revisions
1	05-31-24	BIDDING DOCUMENTS

REGISTERED ARCHITECT JOHN PHIL GRILLI 028758 STATE OF NEW YORK
REG. EXP DATE: 06-30-24

IT IS A VIOLATION OF THE LAW FOR ANY PERSON, UNLESS ACTING UNDER THE DIRECTION OF A LICENSED ARCHITECT, TO ALTER AN ITEM IN ANY WAY.

Drawn by	DE
Checked by	MS/JC
Project No.	44023
Scale	AS NOTED
Date	09-18-22

Mechanical & Electrical Engineer:

Structural Engineer:

NORTH ROCKLAND HIGH SCHOOL EXTENSION BOILER REPLACEMENT

SED# 50-02-01-06-0-007-016

65 CHAPEL STREET
CONGERS, NY 10923

COUNTY OF ROCKLAND

MICHAEL SHILALE ARCHITECTS, L.L.P.
140 Park Avenue New City, NY 10956 Tel 845-708-9200
www.shilale.com

© COPYRIGHT, MICHAEL SHILALE ARCHITECTS LLP. ALL RIGHTS RESERVED.

Drawing Title
SCHEDULES, LEGENDS AND NOTES

Drawing No.
A-001

2020 EXISTING BUILDING CODE OF NEW YORK STATE

BUILDING CODE SUMMARY			
Site	North Rockland Central School District	Date:	12/14/2023
Project Name:	North Rockland High School Extension Boiler Replacement	Location	Rockland County
Project Number:	44023	Architect of Record	MSA
Project Address:	65 Chapel Street, Garnerville, NY 10923		

APPLICABLE ORDINANCES, CODES & STANDARD	
2020	Existing Building Code of New York State
2020	Building Code of New York State

EXISTING BUILDING CODE: CHAPTER 1 SCOPE AND ADMINISTRATION	
SECTION 101	GENERAL
101.2 Scope	The provisions of this code shall apply to the repair, alteration, change of occupancy, addition to and relocation of existing buildings.
101.4 Applicability	This code shall apply to the repair, alteration, change of occupancy, addition and relocation of existing buildings, regardless of occupancy, subject to the criteria of Sections 101.4.1 and 101.4.2.
101..4.2 Buildings Previously Occupied	The legal occupancy of any building existing on the date of adoption of this code shall be permitted to continue without change, except as is specifically covered in this code, the Fire Code of New York State, or the Property Maintenance Code of New York State, or as is deemed necessary by the building official for the general safety and welfare of the occupants and the public.

EXISTING BUILDING CODE: CHAPTER 2 DEFINITIONS	
SECTION 202	GENERAL DEFINITIONS
EQUIPMENT OR FIXTURE	Any plumbing, heating, electrical, ventilating, air conditioning, refrigerating, and fire protection equipment, and elevators, dumbwaiters, escalators, boilers, pressure vessels and other mechanical facilities or installations that are related to building services. Equipment or fixture shall not include manufacturing, production, or process equipment, but shall include connections from building service to process equipment.

EXISTING BUILDING CODE: CHAPTER 3 PROVISIONS FOR ALL COMPLIANCE METHODS	
SECTION 301	ADMINISTRATION
301.3.2 Work Area Compliance Method	Alterations, additions and changes of occupancy complying with the applicable requirements of Chapters 6 through 12 of this code shall be considered in compliance with the provisions of this code.

EXISTING BUILDING CODE: CHAPTER 6 CLASSIFICATION OF WORK	
SECTION 601	GENERAL
601.2 Work Area	The work area, as defined in Chapter 2, shall be identified on the construction documents.
SECTION 602	ALTERATION - LEVEL 1
602.1 Scope	Level 1 alterations include the removal and replacement or the covering of existing materials, elements, equipment, or fixtures using new materials, elements, equipment, or fixtures that serve the same purpose.
602.2 Application	Level 1 alterations shall comply with the provisions of Chapter 7.

EXISTING BUILDING CODE: CHAPTER 7 ALTERATIONS - LEVEL 1	
SECTION 702	BUILDING ELEMENTS AND MATERIALS
702.6 Methods and Materials	New work shall comply with the materials and methods requirements in the Building Code of New York State, Energy Conservation Construction Code of New York State, Mechanical Code of New York State, and Plumbing Code of New York State, as applicable, that specify material standards, detail of installation and connection, joints, penetrations, and continuity of any element, component, or system in the building.
SECTION 703	FIRE PROTECTION
703.1 General	Alterations shall be done in a manner that maintains the level of fire protection provided

EXISTING BUILDING CODE

2020 ENERGY CONSERVATION CODE OF NEW YORK STATE

BUILDING CODE SUMMARY			
Site	North Rockland Central School District	Date:	4/29/2024
Project Name:	North Rockland High School Extension Boiler Replacement	Location	Rockland County
Project Number:	44023	Architect of Record	MSA
Project Address:	65 Chapel Street, Garnerville, NY 10923		

APPLICABLE ORDINANCES, CODES & STANDARD	
2020	Existing Building Code of New York State
2020	Building Code of New York State
2020	Energy Conservation Code of New York State

ENERGY CONSERVATION CODE: CHAPTER 4 COMMERCIAL ENERGY EFFICIENCY			
SECTION C402	Building Envelope Requirements		
Table C402.1.3	Building Envelope Requirements - Opaque Assemblies		
	Climate Zone 5A	Walls	Average R-Value
	Mass	Above Grade	R-11.4ci
	Climate Zone 5A	Roofs	Average R-Value
	Wood Framed or Other	Insul entirely above roof deck	R-30ci
SECTION C403	Building Mechanical Systems		
C403.1 General	Mechanical systems and equipment serving the building heating, cooling, ventilating or refrigerating needs shall comply with this section.		
C403.1.1 Calculation of Heating and Cooling Loads (Mandatory)	Design loads associated with heating, ventilating and air conditioning of the building shall be determined in accordance with ANSI/ASHRAE/ACCA Standard 183 or by an approved equivalent computational procedure using the design parameters specified in Chapter 3. Heating and cooling loads shall be adjusted to account for load reductions that are achieved where energy recovery systems are utilized in the HVAC system in accordance with the ASHRAE HVAC Systems and Equipment Handbook by an approved equivalent computational procedure.		

ENERGY CONSERVATION CODE: CHAPTER 5 EXISTING BUILDING	
SECTION C503	ALTERATIONS
C503.1 General	Alterations to any building or structure shall comply with the requirements of the code for new construction. Alterations shall be such that the existing building or structure is no less conforming to the provisions of this code than the existing building or structure was prior to the alteration. Alterations to an existing building, building system or portion thereof shall conform to the provisions of this code as those provisions relate to new construction without requiring the unaltered portions of the existing building or building system to comply with this code. Alterations shall not create an unsafe or hazardous condition or overload existing building systems.
C503.4 Heating and cooling Systems	New heating, cooling and duct systems that are part of the alteration shall comply with Sections C403.

ENERGY CODE

MANUAL OF PLANNING STANDARDS 2022

MANUAL OF PLANNING STANDARDS SUMMARY			
Owner:	North Rockland Central School District	Date:	4/29/2024
Project Name:	North Rockland High School Extension Boiler Replacement	Location	Rockland County
Project Number:	44023	Architect of Record	MSA
Project Address:	65 Chapel Street, Garnerville, NY 10923		

APPLICABLE ORDINANCES, CODES & STANDARD	
2020	Existing Building Code of New York State
2020	Building Code of New York State
2020	Energy Conservation Code of New York State
2020	Fire Code of New York State

PART III: ENVIRONMENT	
S304	ACOUSTICAL ENVIRONMENT
S304-2 - Mechanical/ Electrical/ Plumbing Noise Control	a. Achieving the proper level of ambient noise in an academic space is critical. If the level is too high, communication between teachers and students will be partially or fully masked. If too low, the slightest noises (pencils dropping, rustling of papers, etc.) will appear to be intensified in their level of disturbance. The intent of this section is to recommend the design of mechanical / electrical / plumbing systems to meet the sound standards of ANSI/ASA S12.60-latest version in classrooms and large Group Instruction spaces used by any grade level. Sound levels do not apply to mechanical / electrical / plumbing systems used solely for emergency purposes such as fire alarm notification devices or emergency generators. b. Table S304-1 is a table of ambient noise criteria for mechanical equipment based on the single number room criteria "RC" curves. The values and ranges represent general limits of acceptability for typical building occupancies. Designs should not exceed upper values stated in Table for instructional spaces. Lower values may be more appropriate and should be based on a careful analysis of economics, space usage and user needs. c. Locations of mechanical and electrical equipment should be carefully chosen to not have an adverse impact on the ambient noise level in the adjacent spaces. To avoid excessive vibration of the building structure by mechanical air-handling units, chillers, compressors, transformers, etc., locate equipment rooms on grade whenever possible. Exterior equipment should be installed in locations such that the sound generated by the equipment will not intrude on instructional spaces at levels that exceed interior HVAC sound levels. d. When locating electrical receptacles for switches and outlets, no back-to-back boxes should be installed in sound-critical rooms. Offset boxes at least two stud cavities from each other.

PART VI: HEATING, VENTILATION AND AIR CONDITIONING REQUIREMENTS	
S602	THERMAL ENVIRONMENT
S602-6 - Mechanical Cooling (Air Conditioning)	a. During the normal school year there are many days when mechanical cooling provided by refrigeration equipment would be desirable, and to an even greater extent, when there is extensive summer use of rooms. b. Mechanical cooling for interior spaces with no exterior operable windows: Interior spaces of pupil occupancy, which are approved because of educational program, shall be provided with equipment for mechanical cooling when a temperature of 78ºF cannot be maintained in the spaces.
S603	CONTROLS
S603 - Controls	a. New HVAC controls should be DDC (direct digital control) with electric actuators. DDC hardware and software should be specified open protocol and web-based communication. Temperature sensors/controls should be provided for every student occupied space. Groups of small spaces (such as offices) with similar building exposures may share sensors. SED recommends temperature sensors for kindergarten through second grades be located closer to the floor to more accurately provide for the comfort of younger students. b. Building automation control workstations and temperature Control Panels should be located so as to be under the supervision of the building supervisor, either in the custodian's office, mechanical equipment room, or in a central area. Subpanels of lower control hierarchy should be located near equipment and spaces served for ease of maintenance and troubleshooting. Control indicator panels for rooftop units should be situated within the building so as to be readily accessible to facility staff. c. Provide a sequence of operation for all HVAC&R equipment that is clearly written to be applicable to the spaces served and that maintains the code required ventilation and occupant comfort. Program to take advantage of natural free cooling whenever outdoor temperatures are favorable. d. Consider employing variable frequency drives on pump and fan motors for energy efficiency under part load conditions. e. Air flow monitoring stations. Please see Section S306. f. Provide motorized, low leakage, insulated dampers at all HVAC&R intakes, relief and exhaust air openings.

MANUAL OF PLANNING STANDARDS

IT IS A VIOLATION OF THE LAW FOR ANY PERSON, UNLESS ACTING UNDER THE DIRECTION OF A LICENSED ARCHITECT, TO ALTER AN ITEM IN ANY WAY.

No.	Date	Revisions
1	05-31-24	BIDDING DOCUMENTS

REGISTERED ARCHITECT JOHN PHIL GRILLI 028758 STATE OF NEW YORK

REG. EXP DATE: 06-30-24

Drawn by MAL/JC
Checked by MS/JC
Project No. 44023
Scale AS NOTED
Date 05/08/24

Mechanical & Electrical Engineer:

Structural Engineer:

NORTH ROCKLAND HIGH SCHOOL EXTENSION BOILER REPLACEMENT

SED# 50-02-01-06-0-007-016

65 CHAPEL STREET
GARNERVILLE, NY 10923

COUNTY OF ROCKLAND

MICHAEL SHILALE ARCHITECTS, L.L.P.
140 Park Avenue New City, NY 10956 Tel 845-708-9200
www.shilale.com

© COPYRIGHT, MICHAEL SHILALE ARCHITECTS LLP, ALL RIGHTS RESERVED.

Drawing Title
CODE ANALYSIS

Drawing No.
B-100

COM*check* Software Version COMcheckWeb
Mechanical Compliance Certificate

Project Information

Energy Code:	2020 New York State Energy Conservation Construction Code
Project Title:	NRHS Extension Boiler Replacement
Location:	Thiells, New York
Climate Zone:	5a
Project Type:	Alteration

Construction Site: Owner/Agent: Designer/Contractor:

Mechanical Systems List

Quantity	System Type & Description
2	Plant: Heating: Hot Water Boiler, Capacity 1900 kBtu/h, Gas Proposed Efficiency: 94.60 % Et, Required Efficiency: 80.00 % Et

Mechanical Compliance Statement

Compliance Statement: The proposed mechanical alteration project represented in this document is consistent with the building plans, specifications, and other calculations submitted with this permit application. The proposed mechanical systems have been designed to meet the 2020 New York State Energy Conservation Construction Code requirements in COM*check* Version COMcheckWeb and to comply with any applicable mandatory requirements listed in the Inspection Checklist.

Name - Title Signature Date

COM*check* Software Version COMcheckWeb
Inspection Checklist

Energy Code: 2020 New York State Energy Conservation Construction Code

Requirements: 97.0% were addressed directly in the COM*check* software

Text in the "Comments/Assumptions" column is provided by the user in the COMcheck Requirements screen. For each requirement, the user certifies that a code requirement will be met and how that is documented, or that an exception is being claimed. Where compliance is itemized in a separate table, a reference to that table is provided.

Section # & Req.ID	Plan Review	Complies?	Comments/Assumptions
C103.2 [PR2][1]	Plans, specifications, and/or calculations provide all information with which compliance can be determined for the mechanical systems and equipment and document where exceptions to the standard are claimed. Load calculations per acceptable engineering standards and handbooks.	☐Complies ☐Does Not ☐Not Observable ☐Not Applicable	Requirement will be met. **Location on plans/spec:** M-001

Additional Comments/Assumptions:

Section # & Req.ID	Footing / Foundation Inspection	Complies?	Comments/Assumptions
C403.12.2, C403.12.3 [FO9][3]	Snow/ice melting system and freeze protection systems have sensors and controls configured to limit service for pavement temperature and outdoor temperature. future connection to controls.	☐Complies ☐Does Not ☐Not Observable ☐Not Applicable	**Exception:** Requirement does not apply.

Additional Comments/Assumptions:

Section # & Req.ID	Plumbing Rough-In Inspection	Complies?	Comments/Assumptions
C404.5, C404.5.1, C404.5.2 [PL6][3]	Heated water supply piping conforms to pipe length and volume requirements. Refer to section details.	☐Complies ☐Does Not ☐Not Observable ☐Not Applicable	Requirement will be met. **Location on plans/spec:** M-002
C404.6.3 [PL7][3]	Pumps that circulate water between a heater and storage tank have controls that limit operation from startup to <= 5 minutes after end of heating cycle.	☐Complies ☐Does Not ☐Not Observable ☐Not Applicable	**Exception:** Requirement does not apply.
C404.7 [PL8][3]	Demand recirculation water systems have controls that start the pump upon receiving a signal from the action of a user of a fixture or appliance and limits the temperature of the water entering the cold-water piping to 104°F.	☐Complies ☐Does Not ☐Not Observable ☐Not Applicable	**Exception:** Requirement does not apply.

Additional Comments/Assumptions:

1	High Impact (Tier 1)	2	Medium Impact (Tier 2)	3	Low Impact (Tier 3)

Section # & Req.ID	Mechanical Rough-In Inspection	Complies?	Comments/Assumptions
C402.2.6 [ME41][3]	Thermally ineffective panel surfaces of sensible heating panels have insulation >= R-3.5.	☐Complies ☐Does Not ☐Not Observable ☐Not Applicable	**Exception:** Requirement does not apply.
C403.12.1 [ME71][2]	Systems that heat outside the building envelope are radiant heat systems controlled by an occupancy sensing device or timer switch.	☐Complies ☐Does Not ☐Not Observable ☐Not Applicable	**Exception:** Requirement does not apply.
C403.2.2 [ME59][1]	Natural or mechanical ventilation is provided in accordance with International Mechanical Code Chapter 4. Mechanical ventilation has capability to reduce outdoor air supply to minimum per IMC Chapter 4.	☐Complies ☐Does Not ☐Not Observable ☐Not Applicable	**Exception:** Requirement does not apply.
C403.7.1 [ME59][1]	Demand control ventilation provided for spaces >500 ft2 and >25 people/1000 ft2 occupant density and served by systems with air side economizer, auto modulating outside air damper control, or design airflow >3,000 cfm.	☐Complies ☐Does Not ☐Not Observable ☐Not Applicable	**Exception:** Requirement does not apply.
C403.7.2 [ME115][3]	Enclosed parking garage ventilation has automatic contaminant detection and capacity to stage or modulate fans to 50% or less of design capacity.	☐Complies ☐Does Not ☐Not Observable ☐Not Applicable	**Exception:** Requirement does not apply.
C403.7.6 [ME141][3]	HVAC systems serving guestrooms in Group R-1 buildings with > 50 guestrooms: Each guestroom is provided with controls that automatically manage temperature setpoint and ventilation (see sections C403.7.6.1 and C403.7.6.2).	☐Complies ☐Does Not ☐Not Observable ☐Not Applicable	**Exception:** Requirement does not apply.
C403.7.4 [ME57][1]	Exhaust air energy recovery on systems meeting Table C403.7.4(1) and C403.7.4(2).	☐Complies ☐Does Not ☐Not Observable ☐Not Applicable	**Exception:** Requirement does not apply.
C403.7.5 [ME116][3]	Kitchen exhaust systems comply with replacement air and conditioned supply air limitations, and satisfy hood rating requirements and maximum exhaust rate criteria.	☐Complies ☐Does Not ☐Not Observable ☐Not Applicable	**Exception:** Requirement does not apply.
C403.11.1, C403.11.2 [ME60][2]	HVAC ducts and plenums insulated in accordance with C403.11.1 and constructed in accordance with C403.11.2, verification may need to occur during Foundation Inspection.	☐Complies ☐Does Not ☐Not Observable ☐Not Applicable	**Exception:** Requirement does not apply.
C403.4.3 [ME69][3]	The heating of fluids in hydronic systems that have been previously mechanically cooled, and the cooling of fluids that have been previously mechanically heated are limited in accordance with Sections C403.4.3.1-C403.4.3.3. Single boiler systems >500,000 Btu/h have multistaged or modulating burner.	☐Complies ☐Does Not ☐Not Observable ☐Not Applicable	Requirement will be met. **Location on plans/spec:** M-002

1	High Impact (Tier 1)	2	Medium Impact (Tier 2)	3	Low Impact (Tier 3)

Section # & Req.ID	Mechanical Rough-In Inspection	Complies?	Comments/Assumptions
C403.4.4 [ME68][3]	Hydronic systems greater than 300,000 Btu/h designed for variable fluid flow. See section language for full details.	☐Complies ☐Does Not ☐Not Observable ☐Not Applicable	**Exception:** Dedicated equipment circulation pumps where configured in primary/secondary design to provide the minimum flow requirements of the equipment manufacturer for proper operation of equipment. **Location on plans/spec:** M-002
C403.3.4 [ME107][3]	System turndown requirement met through multiple single-input boilers, one or more modulating boilers, or a combination of single-input and modulating boilers. Boiler input between 1.0 MBtu/h and 5 MBtu/h has 3:1 turndown ratio, boiler input between 5.0 MBtu/h and 10 MBtu/h has 4:1 turndown ratio, boiler input > 10.0 MBtu/h has 5:1 turndown ratio.	☐Complies ☐Does Not ☐Not Observable ☐Not Applicable	Requirement will be met. **Location on plans/spec:** M-002 *See the Mechanical Systems list for values.*
C403.4.1.4 [ME63][2]	Heating for vestibules and air curtains with integral heating include automatic controls that shut off the heating system when outdoor air temperatures > 45F. Vestibule heating and cooling systems controlled by a thermostat in the vestibule with heating setpoint <= 60F and cooling setpoint >= 80F.	☐Complies ☐Does Not ☐Not Observable ☐Not Applicable	
C408.2.2.1 [ME53][3]	Air outlets and zone terminal devices have means for air balancing.	☐Complies ☐Does Not ☐Not Observable ☐Not Applicable	**Exception:** Requirement does not apply.
C403.5, C403.5.1, C403.5.2 [ME123][3]	Refrigerated display cases, walk-in coolers or walk-in freezers served by remote compressors and remote condensers not located in a condensing unit, have fan-powered condensers that comply with Sections C403.5.1 and refrigeration compressor systems that comply with C403.5.2..	☐Complies ☐Does Not ☐Not Observable ☐Not Applicable	**Exception:** Requirement does not apply.

Additional Comments/Assumptions:

1	High Impact (Tier 1)	2	Medium Impact (Tier 2)	3	Low Impact (Tier 3)

Section # & Req.ID	Final Inspection	Complies?	Comments/Assumptions
C303.3, C408.2.5.3 [FI8][3]	Furnished O&M manuals for HVAC systems within 90 days of system acceptance.	☐Complies ☐Does Not ☐Not Observable ☐Not Applicable	Requirement will be met.
C403.2.2 [FI27][3]	HVAC systems and equipment capacity does not exceed calculated loads.	☐Complies ☐Does Not ☐Not Observable ☐Not Applicable	Requirement will be met. **Location on plans/spec:** M-002
C403.4.1.2 [FI38][3]	Thermostatic controls have a 5 °F deadband.	☐Complies ☐Does Not ☐Not Observable ☐Not Applicable	Requirement will be met. **Location on plans/spec:** M-002
C403.2.4.1.3 [FI20][3]	Temperature controls have setpoint overlap restrictions.	☐Complies ☐Does Not ☐Not Observable ☐Not Applicable	Requirement will be met. **Location on plans/spec:** M-002
C403.2.4.2 [FI39][3]	Each zone equipped with setback controls using automatic time clock or programmable control system.	☐Complies ☐Does Not ☐Not Observable ☐Not Applicable	Requirement will be met. **Location on plans/spec:** M-002
C403.2.4.2.1, C403.2.4.2.2 [FI40][3]	Automatic Controls: Setback to 55°F (heat) and 85°F (cool); 7-day clock, 2-hour occupant override, 10-hour backup	☐Complies ☐Does Not ☐Not Observable ☐Not Applicable	Requirement will be met. **Location on plans/spec:** M-002
C408.2.1 [FI28][1]	Commissioning plan developed by registered design professional or approved agency.	☐Complies ☐Does Not ☐Not Observable ☐Not Applicable	Requirement will be met. **Location on plans/spec:** M-001
C408.2.3.1 [FI31][1]	HVAC equipment has been tested to ensure proper operation.	☐Complies ☐Does Not ☐Not Observable ☐Not Applicable	Requirement will be met. **Location on plans/spec:** M-001
C408.2.3.2 [FI10][1]	HVAC control systems have been tested to ensure proper operation, calibration and adjustment of controls.	☐Complies ☐Does Not ☐Not Observable ☐Not Applicable	Requirement will be met. **Location on plans/spec:** M-001
C408.2.4 [FI29][1]	Preliminary commissioning report completed and certified by registered design professional or approved agency.	☐Complies ☐Does Not ☐Not Observable ☐Not Applicable	Requirement will be met. **Location on plans/spec:** M-001
C408.2.5.1 [FI7][3]	Furnished HVAC as-built drawings submitted within 90 days of system acceptance.	☐Complies ☐Does Not ☐Not Observable ☐Not Applicable	Requirement will be met.
C408.2.5.3 [FI43][1]	An air and/or hydronic system balancing report is provided for HVAC systems.	☐Complies ☐Does Not ☐Not Observable ☐Not Applicable	Requirement will be met. **Location on plans/spec:** M-002

1	High Impact (Tier 1)	2	Medium Impact (Tier 2)	3	Low Impact (Tier 3)

Section # & Req.ID	Final Inspection	Complies?	Comments/Assumptions
C408.2.5.4 [FI30][1]	Final commissioning report due to building owner within 90 days of receipt of certificate of occupancy.	☐Complies ☐Does Not ☐Not Observable ☐Not Applicable	Requirement will be met. **Location on plans/spec:** M-001

Additional Comments/Assumptions:

1	High Impact (Tier 1)	2	Medium Impact (Tier 2)	3	Low Impact (Tier 3)

No.	Date	Revisions
1	05/31/24	BIDDING DOCUMENTS

STATE OF NEW YORK · PETER CATAPANO · 054038 · LICENSED PROFESSIONAL ENGINEER

REG. EXP DATE: 10-31-26

Drawn by	WM
Checked by	PC
Project No.	44023
Scale	AS SHOWN
Date	05/31/2024

Mechanical & Electrical Engineer: **GREENMAN PEDERSEN, INC**
2 EXECUTIVE BOULEVARD, SUITE 202, SUFFERN, NY 10901

Structural Engineer:

NORTH ROCKLAND HIGH SCHOOL EXTENSION BOILER REPLACEMENT

HIGH SCHOOL EXT SED# 05-02-01-06-0-007-016

65 Chapel Street, Garnerville, NY 10923

COUNTY OF ROCKLAND

MICHAEL SHILALE ARCHITECTS, L.L.P.
140 Park Avenue New City, NY 10956 Tel 845-708-9200
www.shilale.com

© COPYRIGHT, MICHAEL SHILALE ARCHITECTS, ALL RIGHTS RESERVED.

Drawing Title **ENERGY CODE COMPLIANCE**

Drawing No. **EN-001**

ASBESTOS ABATEMENT NOTES

PRE-ABATEMENT WORK NOTES:

1. THESE DRAWINGS HAVE BEEN PREPARED UTILIZING THE OWNERS' ORIGINAL CONSTRUCTION DOCUMENTS IN ORDER TO ILLUSTRATE THE EXISTING CONDITIONS OF THE SITE AND STRUCTURES THEREIN. THE CONTRACTOR SHALL BE RESPONSIBLE FOR ACTUAL VERIFICATION OF ALL EXISTING CONDITIONS IN THE FIELD.

2. THE CONTRACTOR SHALL DETERMINE EXACT FINAL LOCATIONS OF PERSONNEL AND WASTE DECONTAMINATION ENCLOSURES, PICK UP AREA FOR REFUSE AND ASBESTOS DEBRIS. THESE LOCATIONS SHALL BE REVIEWED AND PROPERLY APPROVED BY THE DISTRICT PRIOR TO COMMENCEMENT OF WORK. THIS CONTRACTOR SHALL ESTABLISH, LABEL AND MAINTAIN PROPER EXITS AND WAYS OF EGRESS WITHIN EACH WORK AREA FOR NORMAL AND EMERGENCY USE BY WORKERS DURING ALL ABATEMENT ACTIVITIES.

3. THE CONTRACTOR, PRIOR TO BIDDING SHALL BE RESPONSIBLE TO BECOME COMPLETELY FAMILIAR WITH ALL ASPECTS OF THE PROJECT, INCLUDING, BUT NOT LIMITED TO, ALL DEMOLITION AND CONSTRUCTION WORK AS SHOWN IN THE COMPLETE SET OF DRAWINGS AND IN THE PROJECT MANUAL / SPECIFICATIONS AND ASBESTOS SURVEY REPORTS IN ORDER THAT THE FULL SCOPE OF WORK WHICH MAY ENCOUNTER ASBESTOS CONTAINING MATERIALS IS UNDERSTOOD AND ACCOUNTED FOR, BY THE CONTRACTOR IN (UNDERTAKING)THIS PROJECT. A COPY OF THE ASBESTOS SURVEY REPORT CAN BE REQUESTED FROM THE OWNERS' ENVIRONMENTAL CONSULTANT.

4. PRIOR TO ABATEMENT ALL CONTRACTORS WILL SURVEY EXISTING CONDITIONS IN THE ABATEMENT AND GENERAL WORK AREAS. ITEMS / MATERIALS, ETC., DAMAGED OR NON-FUNCTIONAL SHALL BE LISTED, NOTED, PHOTOGRAPHED AND REVIEWED WITH THE PROJECT INSPECTOR. ALL OTHER ITEMS / MATERIALS SHALL BE REVIEWED WITH THE PROJECT INSPECTOR. ALL OTHER ITEMS / MATERIALS SHALL BE ASSUMED TO BE IN GOOD CONDITION AND WORKING ORDER. IT SHALL BE THE RESPONSIBILITY OF THE ABATEMENT CONTRACTOR TO MAINTAIN ALL MATERIALS, ITEMS, EQUIPMENT, SYSTEMS, ETC. IN THEIR ORIGINAL CONDITION AND RETURN TO OWNER/GENERAL CONTRACTOR, ETC., IN SAME CONDITION AT THE END OF THIS CONTRACT.

0 1/2 1 1/2 1

IF THIS BAR DOES NOT MEASURE 1" THEN DRAWING IS NOT TO FULL SCALE

ASBESTOS REMOVAL GENERAL NOTES:

1. ASBESTOS ABATEMENT INDICATED ON THESE DRAWINGS SHALL BE PERFORMED BY A NYS DEPARTMENT OF LABOR LICENSED ASBESTOS ABATEMENT CONTRACTOR, WHO SHALL VERIFY ALL EXISTING CONDITIONS, DIMENSIONS AND QUANTITIES PRIOR TO BID.

2. THE CONTRACTOR SHALL PERFORM ALL CONTRACT WORK IN ACCORDANCE WITH CONTRACT SPECIFICATIONS, NEW YORK STATE DEPARTMENT OF LABOR (NYSDOL) INDUSTRIAL HEALTH CODE RULE 56, OSHA, NESHAPS, AHERA, NYSDEC AND ALL OTHER APPLICABLE CODES.

3. THE CONTRACTOR SHALL MAINTAIN THE SITE AS NEAT AS POSSIBLE AND ORDERLY DURING (THE COURSE OF)THE WORK. ALL LOOSE DEBRIS WHICH MAY (BECOME WINDBORNE) BLOW OFF THE SITE, SHALL BE COLLECTED AND DISPOSED OF PROPERLY BY THE CONTRACTOR ON A DAILY BASIS AS PART OF THE PROJECT WORK.

4. THE CONTRACTOR SHALL PROVIDE BARRIERS AROUND THE WORK AREAS IN ORDER TO ENSURE SAFE PASSAGE BY ANY PERSON. THESE BARRIERS SHALL ALSO SERVE TO KEEP ALL UNAUTHORIZED PERSONS OUT OF THE PROJECT AREA FOR THE DURATION OF THE WORK.

5. VARIANCES: CONTRACTOR SHALL PAY FOR AND OBTAIN ANY NECESSARY SITE SPECIFIC VARIANCES.

6. THE CONTRACTOR SHALL MAINTAIN SECURITY IN THE BUILDING AND THE WORK AREAS AT ALL TIMES.

7. PROJECT STAGING, STORAGE, SCHEDULING AND ACCESS SHALL BE COORDINATED WITH AND APPROVED BY THE ARCHITECT, CONSTRUCTION MANAGER AND OWNER PRIOR TO PROCEEDING WITH WORK.

8. SHOULD IT BECOME NECESSARY, THE CONTRACTOR SHALL COORDINATE SHUT DOWN AND LOCK OUT / TAG OUT OF THE ELECTRICAL POWER FROM THE OWNERS' POWER, WITH OWNERS' REPRESENTATIVE, PRIOR TO THE COMMENCEMENT OF WORK.

9. ALL TEMPORARY POWER TO THE WORK AREA SHALL BE BROUGHT IN FROM OUTSIDE THE WORK AREA THROUGH A GROUND-FAULT CIRCUIT INTERRUPTER AT THE SOURCE.

10. CONTRACTOR SHALL COORDINATE CONNECTION OF WATER SERVICE FOR DECONTAMINATION PURPOSES WITH OWNERS' REPRESENTATIVE. WATER FOR DECONTAMINATION UNITS IS AVAILABLE FROM THE OWNER.

11. THE OWNER OR OWNERS' REPRESENTATIVE IS RESPONSIBLE TO CONTRACT FOR NYSDOL PROJECTS MONITORING / AIR SAMPLING TECHNICIAN SERVICES AS REQUIRED.

12. CONTRACTOR TO PROVIDE A COPY OF SAFETY DATA SHEETS (SDS'S) FOR ANY CHEMICAL AGENTS TO BE USED DURING THE ASBESTOS ABATEMENT TO THE PROJECT MONITOR AND THE OWNER'S REPRESENTATIVE.

13. CONTRACTOR SHALL REQUEST AND RECEIVE PROJECT MONITOR AND OWNERS' REPRESENTATIVES APPROVAL OF ALL WORK BEFORE ANY ABATEMENT IS UNDERTAKEN.

14. UNDER NO CIRCUMSTANCES SHALL CONTAMINATED WASTE WATER BE DISCHARGED THROUGH A SYSTEM WITHOUT FILTERING. THE MAXIMUM FILTER SIZE OPENING SHALL BE CAPABLE OF RETAINING A 5.0 MICRON PARTICLE SIZE COLLECTION CAPABILITY.

15. DRAWINGS ATTEMPT TO INDICATE THE GENERAL SCOPE OF EXISTING CONDITIONS AND ITEMS AFFECTED BY THE ABATEMENT WORK. CONTRACTOR SHALL EXAMINE THE WORK AREA PRIOR TO FORMULATING HIS BID SHALL INCLUDE FIELD VARIATIONS FROM THOSE SHOWN WITHIN THE GENERAL INTENT OF THE WORK.

16. THE CONTRACTOR SHALL REMOVE AND DISPOSE OF ALL ASBESTOS CONTAINING MATERIALS CONTAINED WITHIN AND GENERATED FROM THE ABATEMENT PROJECT AND ASSOCIATED WITH ALL PROJECT WORK, IN COMPLIANCE WITH ALL APPLICABLE LAWS, RULES REGULATIONS AND ALL REQUIREMENTS OF ALL AUTHORITIES HAVING JURISDICTION.

17. THE CONTRACTOR SHALL REMOVE AND DISPOSE OF ALL ASBESTOS CONTAINING MATERIALS CONTAINED WITHIN AND GENERATED FROM THE PROJECT AND ASSOCIATED WITH ALL PROJECT WORK, IN THE MOST EFFICIENT AND COST EFFECTIVE METHOD POSSIBLE, WHICH ALSO COMPLIES WITH THE REQUIREMENTS LISTED ABOVE.

POST ABATEMENT WORK NOTES:

1. PROVIDE ALL APPLICABLE CODE RULE 56 PROCEDURES, CLEAN UP ANDADDITIONAL TESTING AS REQUIRED.

2. AFTER FINAL CLEARANCE HAS BEEN ATTAINED (SUBSTANTIAL COMPLETION) THE ABATEMENT CONTRACTOR, TOGETHER WITH THE PROJECT INSPECTOR AND OWNER'S REPRESENTATIVE WILL SURVEY FINAL CONDITIONS IN THE ABATEMENT AND GENERAL WORK AREAS. ITEMS / MATERIALS, ETC., DAMAGED OR NON-FUNCTIONAL SHALL BE LISTED, NOTED, PHOTOGRAPHED AND REVIEWED WITH THE PROJECT INSPECTOR. ALL OTHER ITEMS / MATERIALS SHALL BE REVIEWED WITH THE PROJECT INSPECTOR. ALL OTHER ITEMS / MATERIALS NOT NOTED, SHALL BE ASSUMED TO BE IN GOOD CONDITION AND WORKING ORDER. IT SHALL BE THE RESPONSIBILITY OF THE ABATEMENT CONTRACTOR TO MAINTAIN ALL MATERIALS, ITEMS, EQUIPMENT, SYSTEMS, ETC. IN THEIR ORIGINAL CONDITION AND RETURN TO OWNER/GENERAL CONTRACTOR, ETC., IN SAME CONDITION AT THE END OF THIS CONTRACT. ANY NEW DAMAGE OR MISSING EQUIPMENT SHALL BE NOTED AND THE COST OFFSET FROM THE CONTRACT.

3. REMOVE ALL TEMPORARY ENCLOSURES, BARRIERS, ETC. REINSTALL ITEMS/WORK PREVIOUSLY REMOVED. ALL TAPE AND ADHESIVE RESIDUALS TO BE REMOVED. TEST AND REPAIR.

4. THE CONTRACTOR SHALL TAKE ALL NECESSARY PRECAUTIONS TO ENSURE AGAINST DAMAGE TO THE EXISTING WORK TO REMAIN IN PLACE. ANY DAMAGE TO SUCH WORK SHALL BE REPAIRED OR REPLACED TO THE SATISFACTION OF THE ARCHITECT AND OWNER AT NO ADDITIONAL COST TO THE CONTRACT.

5. AT COMPLETION OF THE ABATEMENT WORK, A CONDITION SURVEY SHALL BE DONE BY ALL CONTRACTORS AND PROJECT INSPECTOR (SEE NOTE 2.) ANY VARIATION (I.E. DAMAGE BY THE CONTRACTOR) SHALL BE REPAIRED / RESTORED BY THE ABATEMENT CONTRACTOR.

6. THE CONTRACTOR SHALL, UPON COMPLETION OF THE REMOVAL, PROVIDE WRITTEN DOCUMENTATION (INCLUDING ALL APPROPRIATE THIRD PARTY TESTING RESULTS) THAT THE PROJECT WORK AREAS ARE COMPLETELY FREE OF ALL ASBESTOS CONTAINING MATERIALS (CONTEMPLATED FOR REMOVAL UNDER THIS PROJECT, OR PHASE) AT FINAL CLEARANCE.

7. THE CONTRACTOR SHALL PROVIDE RECORDS OF ALL ASBESTOS CONTAINING MATERIALS REMOVED FROM THE SITE, INCLUDING THE COMPOSITION AND VOLUMES OF DISPOSED MATERIALS AND THE FINAL DISPOSAL SITE(S).

PLAN NORTH

IT IS A VIOLATION OF THE LAW FOR ANY PERSON, UNLESS ACTING UNDER THE DIRECTION OF A LICENSED ARCHITECT, TO ALTER AN ITEM IN ANY WAY.

No.	Date	Revisions
1	05-31-24	BIDDING DOCUMENTS

REG. EXP. DATE: 11-30-25

Drawn by	AM
Checked by	RL
Project No.	44023
Scale	AS NOTED
Date	05-31-24

Quality Environmental Solutions & Technologies, Inc.
1298 NYS Route 9
Wappingers Falls, NY 12590
Tel: (845) 298-6031

NORTH ROCKLAND HIGH SCHOOL EXTENSION BOILER REPLACEMENT

HIGH SCHOOL SED# 50-02-01-06-0-007-016

65 Chapel Street
Garnerville, NY 10923

COUNTY OF ROCKLAND

MICHAEL SHILALE ARCHITECTS, L.L.P.
140 Park Avenue New City, NY 10956 Tel 845-708-9200
www.shilale.com

Drawing Title: ABATEMENT NOTES

Drawing No.: AA-000

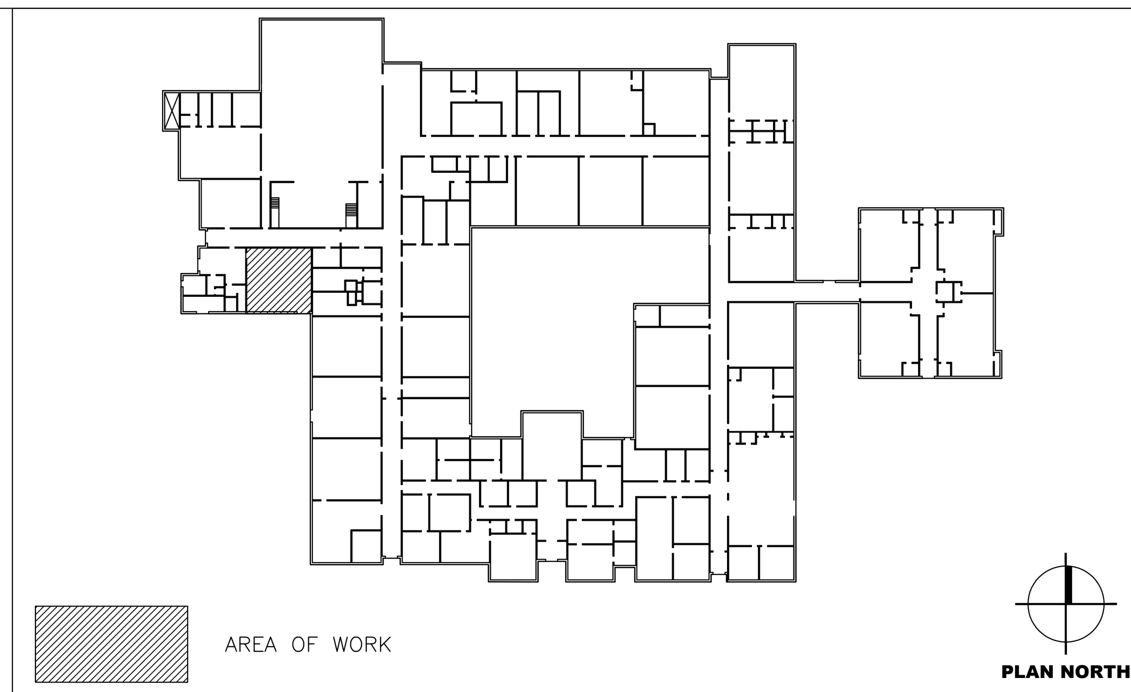

KEY PLAN

CAST IRON SECTIONAL BOILER TO BE REMOVED

SMITH BOILER TO BE REMOVED

ASBESTOS ABATEMENT LEGEND

(hatched)	PACM BOILER INTERIORS AND EXTERIORS

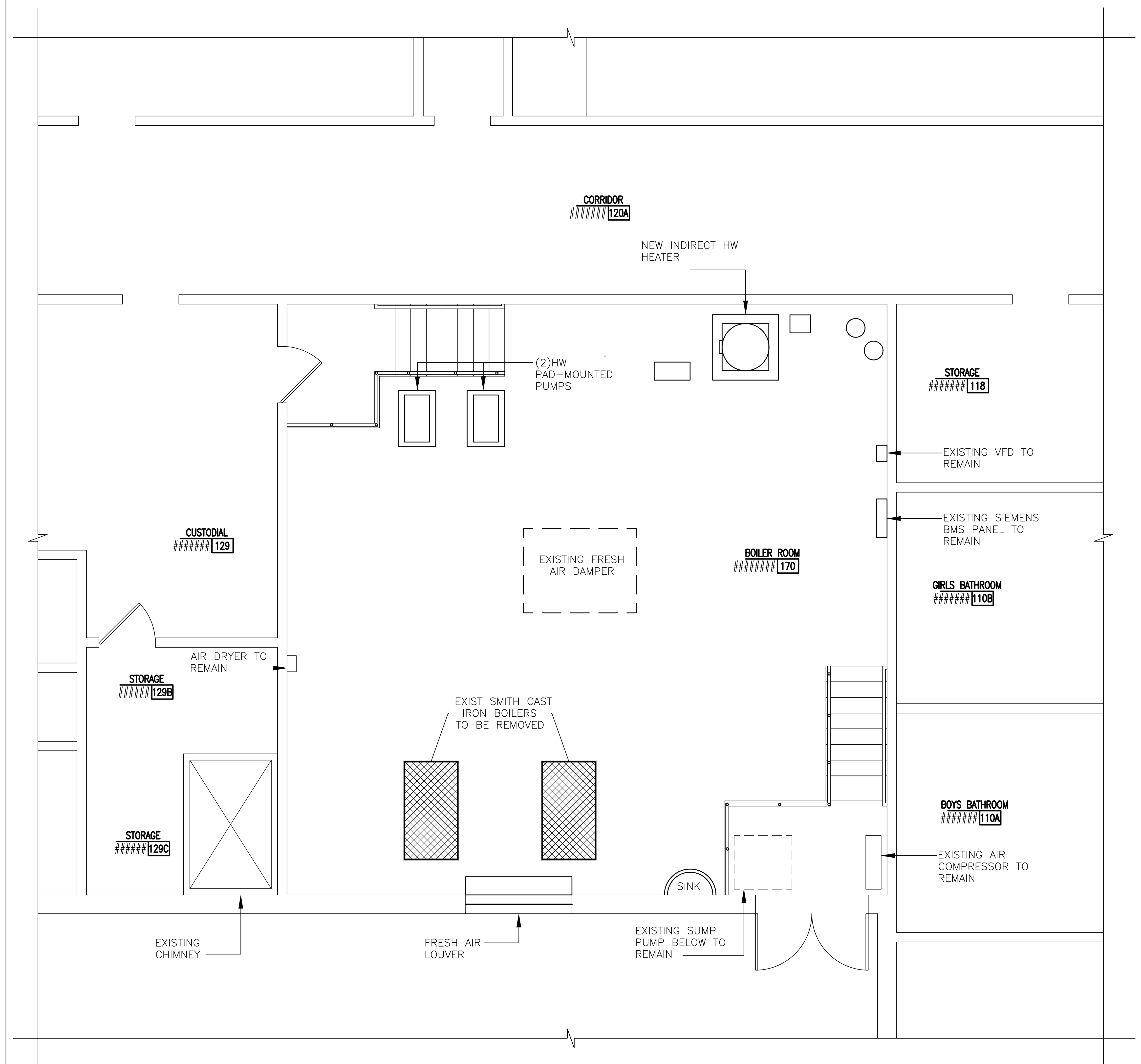

1 NRHSE BOILER ROOM ACM ABATEMENT PLAN

SCALE: NTS

0 1/2 1
IF THIS BAR DOES NOT MEASURE 1" THEN DRAWING IS NOT TO FULL SCALE

IT IS A VIOLATION OF THE LAW FOR ANY PERSON, UNLESS ACTING UNDER THE DIRECTION OF A LICENSED ARCHITECT, TO ALTER AN ITEM IN ANY WAY.

No.	Date	Revisions
1	05-31-24	BIDDING DOCUMENTS

STATE OF NEW YORK · ANTHONY NICHOLAS MELUSO · LICENSED PROFESSIONAL ENGINEER · 067937

REG. EXP DATE: 11-30-25

Drawn by	AM
Checked by	RL
Project No.	44023
Scale	AS NOTED
Date	05-31-24

Quality Environmental Solutions & Technologies, Inc.
1298 NYS Route 9
Wappingers Falls, NY 12590
Tel: (845) 298-6031

NORTH ROCKLAND HIGH SCHOOL EXTENSION BOILER REPLACEMENT

HIGH SCHOOL SED# 50-02-01-06-0-007-016

65 Chapel Street
Garnerville, NY 10923

COUNTY OF ROCKLAND

MICHAEL SHILALE ARCHITECTS, L.L.P.
140 Park Avenue New City, NY 10956 Tel 845-708-9200
www.shilale.com

Drawing Title: PROPOSED BOILER ROOM ACM PLAN

Drawing No. AA-100

©

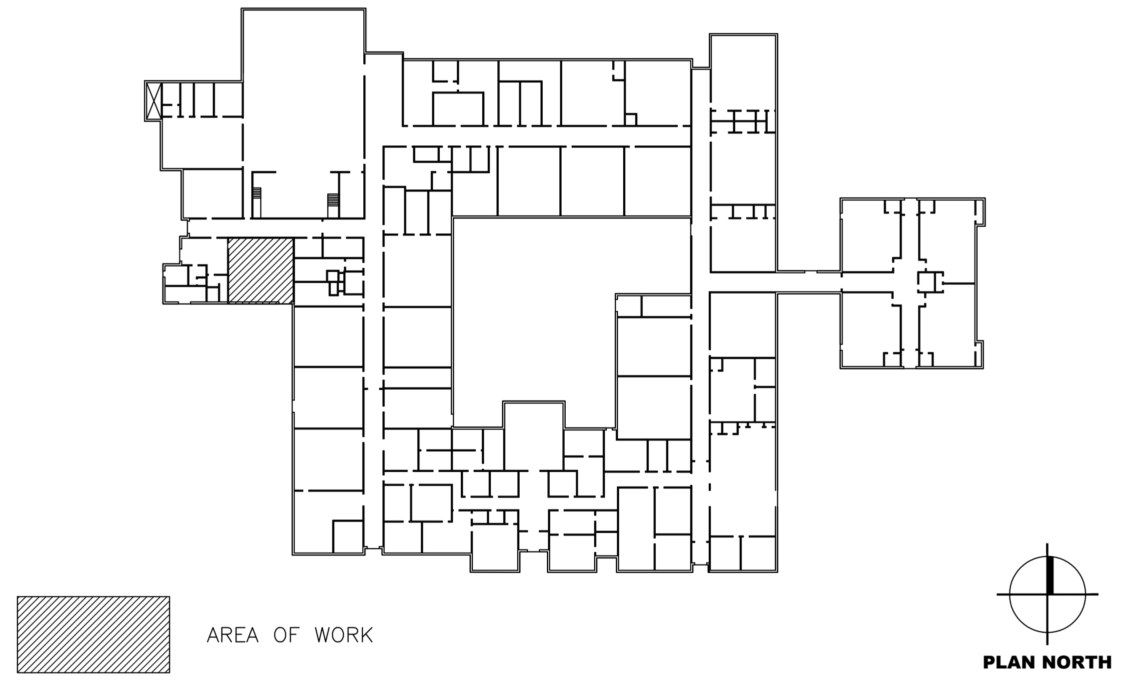

KEY PLAN

ROOF DAMPER / LOUVRE TO BE REMOVED

ASBESTOS ABATEMENT LEGEND
PACM EQUIPMENT CURB FLASHING TAR

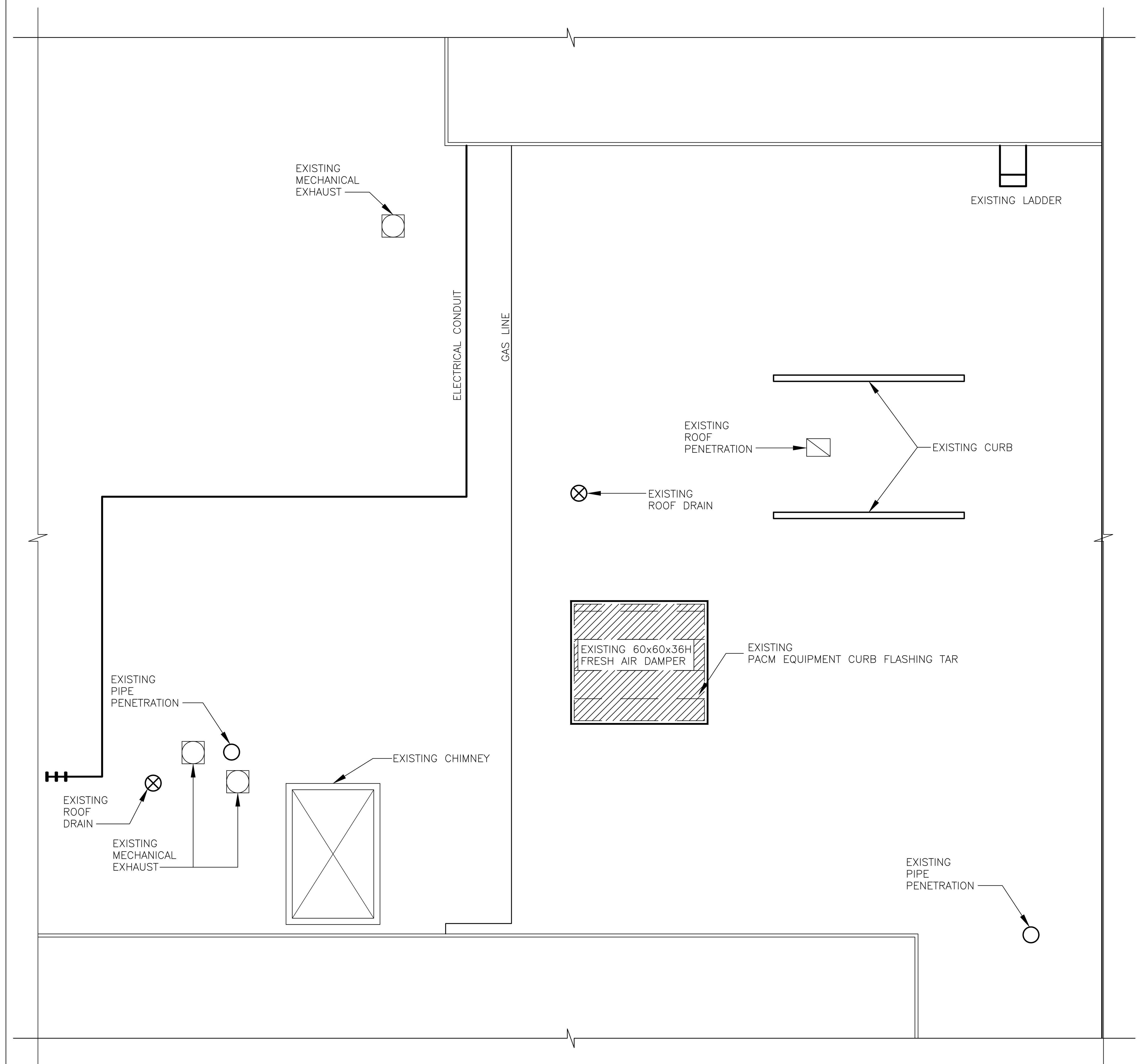

0 1/2 1
IF THIS BAR DOES NOT MEASURE 1" THEN DRAWING IS NOT TO FULL SCALE

1 NRHSE BOILER ROOM ROOF ACM ABATEMENT PLAN

SCALE: NTS

IT IS A VIOLATION OF THE LAW FOR ANY PERSON, UNLESS ACTING UNDER THE DIRECTION OF A LICENSED ARCHITECT, TO ALTER AN ITEM IN ANY WAY.

No.	Date	Revisions
1	05-31-24	BIDDING DOCUMENTS

STATE OF NEW YORK — LICENSED PROFESSIONAL ENGINEER
REG. EXP. DATE: 11-30-25

Drawn by	AM
Checked by	RL
Project No.	44023
Scale	AS NOTED
Date	05-31-24

Quality Environmental Solutions & Technologies, Inc.
1298 NYS Route 9
Wappingers Falls, NY 12590
Tel: (845) 298-6031

NORTH ROCKLAND HIGH SCHOOL EXTENSION BOILER REPLACEMENT

HIGH SCHOOL SED# 50-02-01-06-0-007-016

65 Chapel Street
Garnerville, NY 10923

COUNTY OF ROCKLAND

MICHAEL SHILALE ARCHITECTS, L.L.P.
140 Park Avenue New City, NY 10956 Tel 845-708-9200
www.shilale.com

Drawing Title: ROOF ABATEMENT PLAN

Drawing No.: AA-200

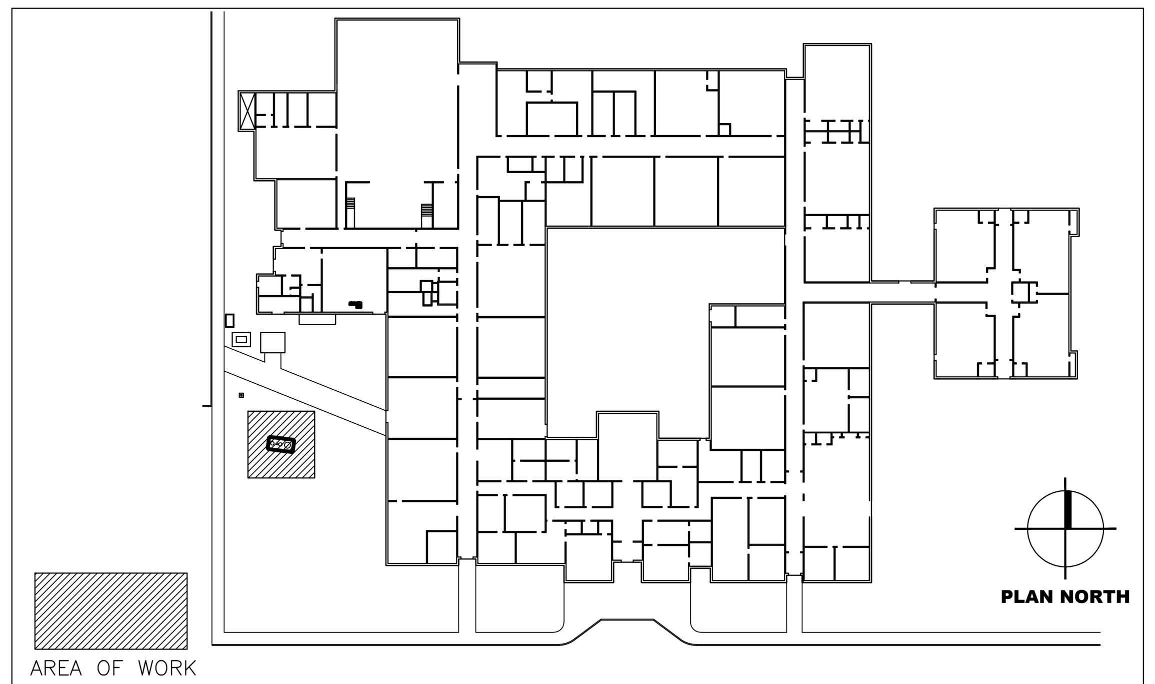

KEY PLAN

OIL TANK BID ITEMS	
BASE BID:	DECOMISSION AND REMOVAL OF UNDERGROUND OIL STORAGE TANK .
BID ALTERNATE :	DECOMISSION OF UNDERGROUND OIL STORAGE TANK AND REMAIN IN PLACE.

GENERAL NOTES

SITE KEY NOTES

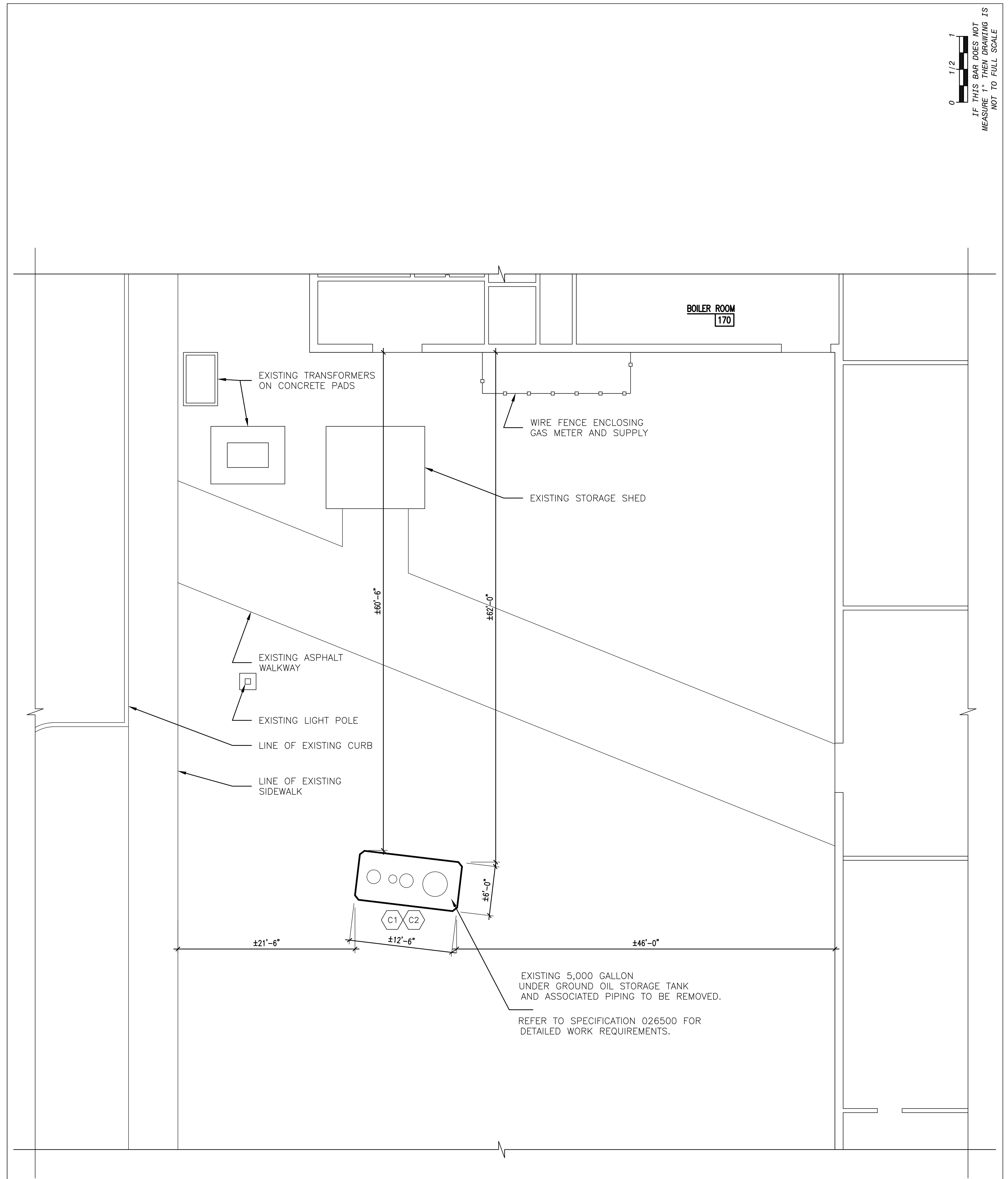

1 OIL TANK SITE PLAN
SCALE: NOT TO SCALE

PLAN NORTH

No.	Date	Revisions
1	05-31-24	BIDDING DOCUMENTS

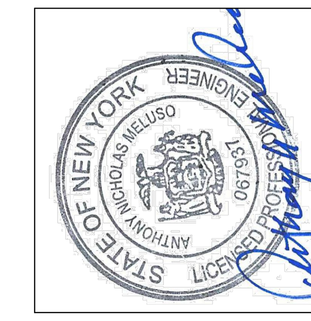

REG. EXP. DATE: 11-30-25

Drawn by AM
RL
44023
AS NOTED
Date 05-31-24

Quality Environmental Solutions & Technologies, Inc.
1298 NYS Route 9
Wappingers Falls, NY 12590
Tel: (845) 298-6031

NORTH ROCKLAND HIGH SCHOOL EXTENSION BOILER REPLACEMENT

HIGH SCHOOL SED# 50-02-01-06-0-007-016

65 Chapel Street
Garnerville, NY 10923

COUNTY OF ROCKLAND

MICHAEL SHILALE ARCHITECTS, L.L.P.
140 Park Avenue New City, NY 10956 Tel 845-708-9200
www.shilale.com

©

Drawing Title
OIL TANK SITE PLAN

Drawing No.
T-100

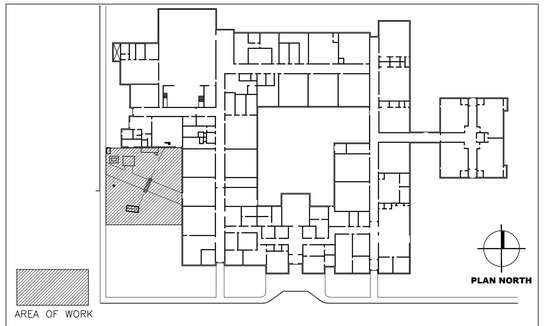

KEY PLAN

1. SEE AND COORDINATE WITH ASBESTOS PLANS.
2. CONTRACTOR IS RESPONSIBLE TO PROVIDE TESTING DATA ON ALL FILL BROUGHT ONTO THE SITE.

GENERAL NOTES

C1 AS PER BASE BID: REMOVE EXISTING OIL TANK AND BACKFILL. PROVIDE CLEAN FILL, COMPACT IN LIFTS, ADD 4" TOPSOIL. RAKE SEED, AND HAY ALL DISTURBED AREAS

C2 AS PER ALTERNATE NO. 2: DECOMMISSION EXISTING OIL TANK TO REMAIN IN PLACE AND FILL IN LIEU OF REMOVAL.

C3 INSTALL NEW FENCE GATE.

C4 REMOVE EXISTING OIL TANK VENT. PATCH MASONRY TO MATCH (SUBMIT BRICK EXAMPLES).

C5 UNDERGOUND OIL LINE TO BE REMOVED.

C6 EXISTING OIL LINE UNDER WALKWAY TO BE ABANDONED IN PLACE.

SITE KEY NOTES

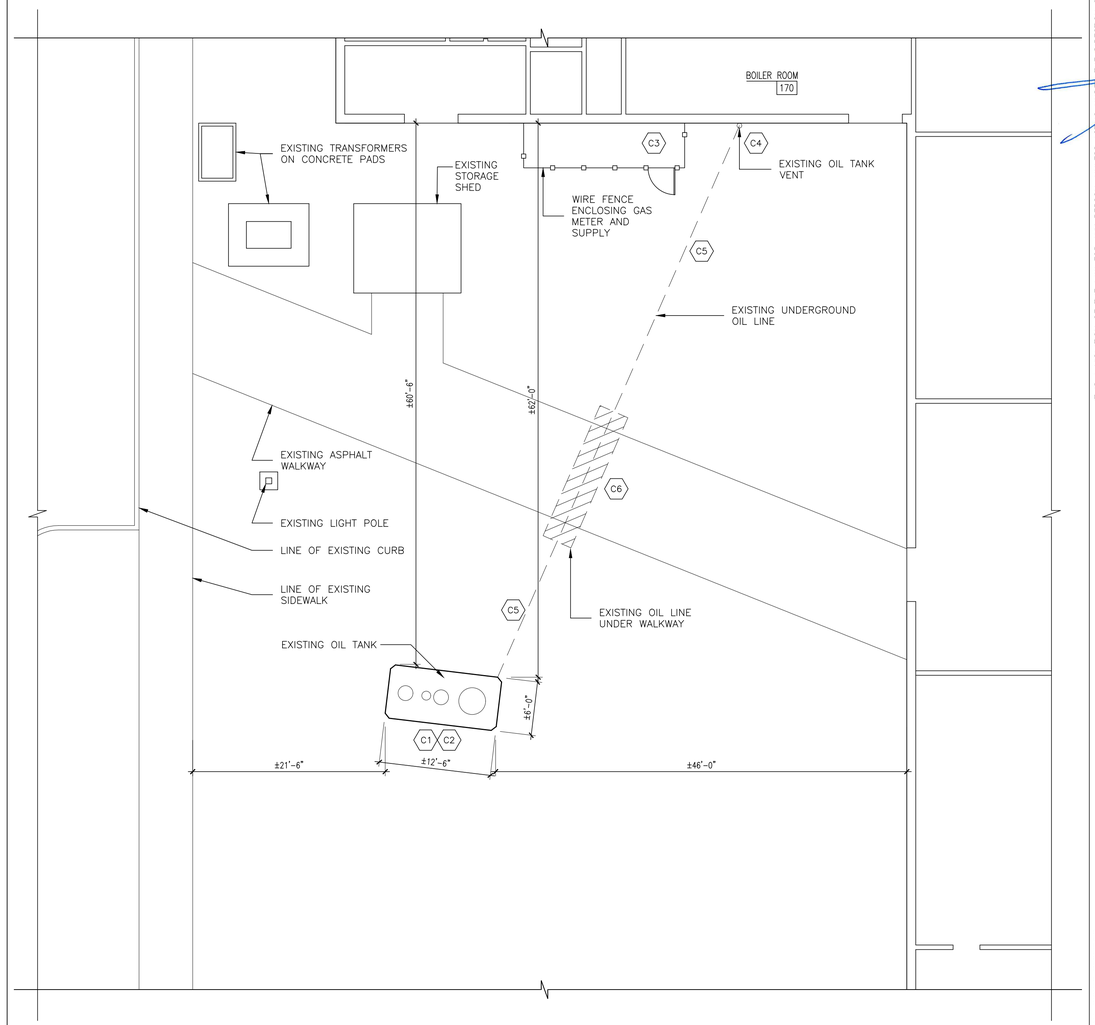

1 OIL TANK SITE PLAN

SCALE: 1/8"=1"-0"

PLAN NORTH

0 1/2 1
IF THIS BAR DOES NOT MEASURE 1, THEN DRAWING IS NOT TO FULL SCALE

IT IS A VIOLATION OF THE LAW FOR ANY PERSON, UNLESS ACTING UNDER THE DIRECTION OF A LICENSED ARCHITECT, TO ALTER AN ITEM IN ANY WAY.

No.	Date	Revisions
1	05-31-24	BIDDING DOCUMENTS

REGISTERED ARCHITECT JOHN PHIL GRILLI 028758 STATE OF NEW YORK
REG. EXP. DATE: 06-30-24

Drawn by	MAL
Checked by	MS/JC
Project No.	44023
Scale	AS NOTED
Date	05-31-24

Mechanical & Electrical Engineer:

Structural Engineer:

NORTH ROCKLAND HIGH SCHOOL EXTENSION BOILER REPLACEMENT

SED# 50-02-01-06-0-007-016

65 CHAPEL STREET
GARNERVILLE, NY 10923

COUNTY OF ROCKLAND

MICHAEL SHILALE ARCHITECTS, L.L.P.
140 Park Avenue New City, NY 10956 Tel 845-708-9200
www.shilale.com

© COPYRIGHT, MICHAEL SHILALE ARCHITECTS LLP, ALL RIGHTS RESERVED.

Drawing Title
SITE PLAN

Drawing No.
C-101

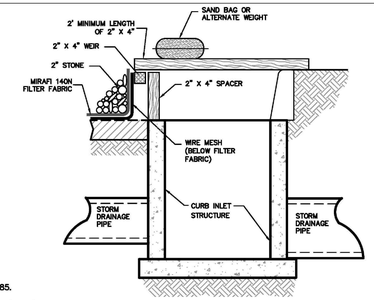

NOTES:

1. FILTER FABRIC SHALL HAVE AN EOS OF 40-85.
2. WOODEN FRAME SHALL BE CONSTRUCTED OF 2" X 4" CONSTRUCTION GRADE LUMBER.
3. WIRE MESH ACROSS THROAT SHALL BE A CONTINUOUS PIECE 30 INCH MINIMUM WIDTH WITH A LENGTH 4 FEET LONGER THAN THE THROAT. IT SHALL BE SHAPED AND SECURELY NAILED TO A 2" X 4" WEIR.
4. THE WEIR SHALL BE SECURELY NAILED TO 2" X 4" SPACERS 9 INCHES LONG SPACED NO MORE THAN 6 FEET APART.
5. THE ASSEMBLY SHALL BE PLACED AGAINST THE INLET AND SECURED BY 2" X 4" ANCHORS 2 FEET LONG EXTENDING ACROSS THE TOP OF THE INLET AND HELD IN PLACE BY SAND BAGS OR ALTERNATE WEIGHTS.

6 INLET PROTECTION DETAIL

SCALE: N.T.S.

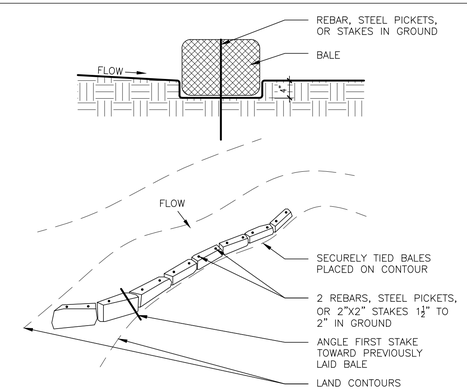

3 HAY BALE DETAIL

SCALE: N.T.S.

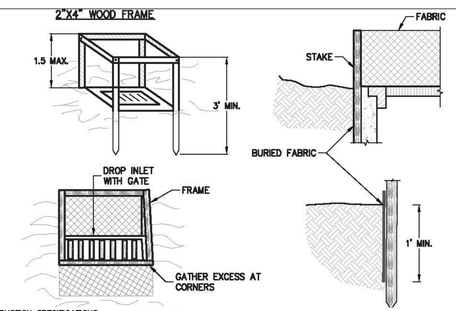

CONSTRUCTION SPECIFICATIONS

1. FILTER FABRIC SHALL HAVE AN EOS OF 40-85. BURLAP MAY BE USED FOR SHORT TERM APPLICATIONS.
2. CUT FABRIC FROM A CONTINUOUS ROLL TO ELIMINATE JOINTS. IF JOINTS ARE NEEDED THEY WILL BE OVERLAPPED TO THE NEXT STAKE.
3. STAKE MATERIALS WILL BE STANDARD 2"x4" WOOD OR EQUIVALENT. METAL WITH A MINIMUM LENGTH OF 3 FEET.
4. SPACE STAKES EVENLY AROUND INLET 3 FEET APART AND DRIVE A MINIMUM 18 INCHES DEEP. SPANS GREATER THAN 3 FEET MAY BE BRIDGED WITH THE USE OF WIRE MESH BEHIND THE FILTER FABRIC FOR SUPPORT.
5. FABRIC SHALL BE EMBEDDED 1 FOOT MINIMUM BELOW GROUND AND BACKFILLED. IT SHALL BE SECURELY FASTENED TO THE STAKES AND FRAME.
6. A 2"x4" WOOD FRAME SHALL BE COMPLETED AROUND THE CREST OF THE FABRIC FOR OVER FLOW STABILITY.
7. MAXIMUM DRAINAGE AREA 1 ACRE

5 INLET PROTECTION DETAIL

SCALE: N.T.S.

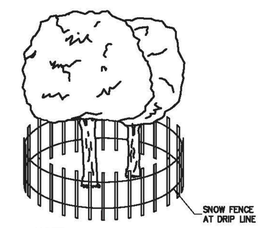

NOTE:
PROVIDE PROTECTION FOR TREES TO REMAIN WITHIN THE LIMIT OF DISTURBANCE

2 TREE PROTECTION DETAIL

SCALE: N.T.S.

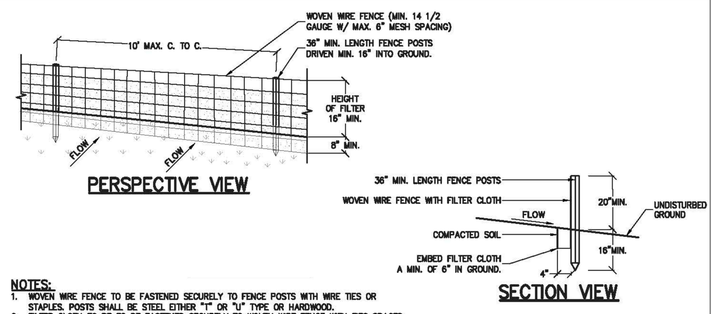

NOTES:

1. WOVEN WIRE FENCE TO BE FASTENED SECURELY TO FENCE POSTS WITH WIRE TIES OR STAPLES. POSTS SHALL BE STEEL EITHER "T" OR "U" TYPE OR HARDWOOD.
2. FILTER CLOTH TO BE TO BE FASTENED SECURELY TO WOVEN WIRE FENCE WITH TIES SPACED EVERY 24" AT TOP AND MID SECTION. FENCE SHALL BE WOVEN WIRE, 12 1/2 GAUGE, 6" MAXIMUM MESH OPENING.
3. WHEN TWO SECTIONS OF FILTER CLOTH ADJOIN EACH OTHER THEY SHALL BE OVER-LAPPED BY SIX INCHES AND FOLDED. FILTER CLOTH SHALL BE EITHER FILTER X, MIRAFI 100X, STABILINKA T140N, OR APPROVED EQUIVALENT.
4. PREFABRICATED UNITS SHALL BE GEOFAB, ENVIROFENCE, OR APPROVED EQUIVALENT.
5. MAINTENANCE SHALL BE PERFORMED AS NEEDED AND MATERIAL REMOVED WHEN "BULGES" DEVELOP IN THE SILT FENCE.

1 SILT FENCE DETAIL

SCALE: N.T.S.

IF THIS BAR DOES NOT MEASURE 1" THEN DRAWING IS NOT TO FULL SCALE

0 1/2 1

No.	Date	Revisions
1	05-31-24	BIDDING DOCUMENTS

REGISTERED ARCHITECT JOHN PHIL GRILLI 028758 STATE OF NEW YORK

REG. EXP DATE: 06-30-24

IT IS A VIOLATION OF THE LAW FOR ANY PERSON, UNLESS ACTING UNDER THE DIRECTION OF A LICENSED ARCHITECT, TO ALTER AN ITEM IN ANY WAY.

Drawn by JR/CP/RH
Checked by MS/JC
Project No. 44023
Scale AS NOTED
Date 09-18-23

Mechanical & Electrical Engineer:

Structural Engineer:

NORTH ROCKLAND HIGH SCHOOL EXTENSION BOILER REPLACEMENT

SED# 50-02-01-06-0-007-016

65 CHAPEL STREET
GARNERVILLE, NY 10923

COUNTY OF ROCKLAND

MICHAEL SHILALE ARCHITECTS, L.L.P.
140 Park Avenue New City, NY 10956 Tel 845-708-9200
www.shilale.com

© COPYRIGHT, MICHAEL SHILALE ARCHITECTS LLP, ALL RIGHTS RESERVED.

Drawing Title
SITE DETAILS

Drawing No.
C-501

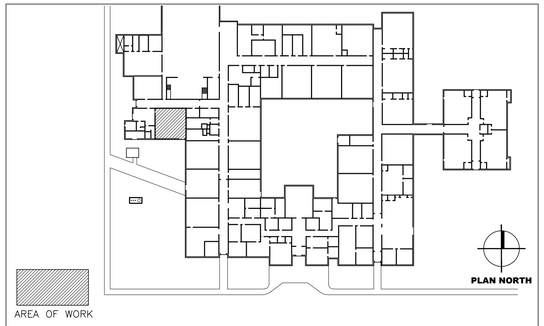

KEY PLAN

1. SEE MEP DRAWINGS FOR DEMOLITION OF MECHANICAL, ELECTRICAL, AND PLUMBING ITEMS.
2. COORDINATE ALL ROOF PENETRATIONS REQUIRED FOR NEW MECHANICAL EQUIPMENT WITH MECHANICAL DRAWINGS.

DEMOLITION NOTES

- D1 REMOVE EXISTING BOILER. PREPARE FOR NEW HIGH EFFICIENCY CONDENSING BOILER.
- D2 EXISTING HOUSEKEEPING PAD TO REMAIN.
- D3 BASE BID: EXISTING PAD–MOUNTED HOT WATER PUMPS TO REMAIN. ALT. NO. 1: REMOVE AND REPLACE 2 NEW HOT WATER PAD–MOUNTED PUMPS AND INSTALL ON EXISTING HOUSEKEEPING PADS.
- D4 EXISTING HOT WATER CIRCULATOR PUMPS TO BE REMOVED AND STORED FOR REINSTALLATION. SEE MECHANICAL DRAWINGS.
- D5 EXISTING HOT WATER STORAGE TANK TO BE REMOVED.
- D6 EXISTING HOUSEKEEPING PAD TO BE REMOVED.
- D7 EXISTING EXPANSION TANK ABOVE TO BE REMOVED.
- D8 EXISTING OIL TANK TO BE REMOVED.
- D9 EXISTING CHILLED WATER PUMP TO BE REMOVED.
- D10 EXISTING GAS FIRED WATER HEATER TO BE REMOVED. SEE MECHANICAL DRAWINGS.
- D11 EXISTING MOTORIZED FRESH AIR DAMPER TO BE REMOVED AT CIELING AND WALL. EXISTING LOUVER AT WALL TO REMAIN. SEE MECHANICAL DRAWINGS.
- D12 EXISTING CONTROL PANELS AND MECHANICAL EQUIPMENT TO BE REMOVED. SEE MECHANICAL DRAWINGS.

DEMOLITION KEY NOTES

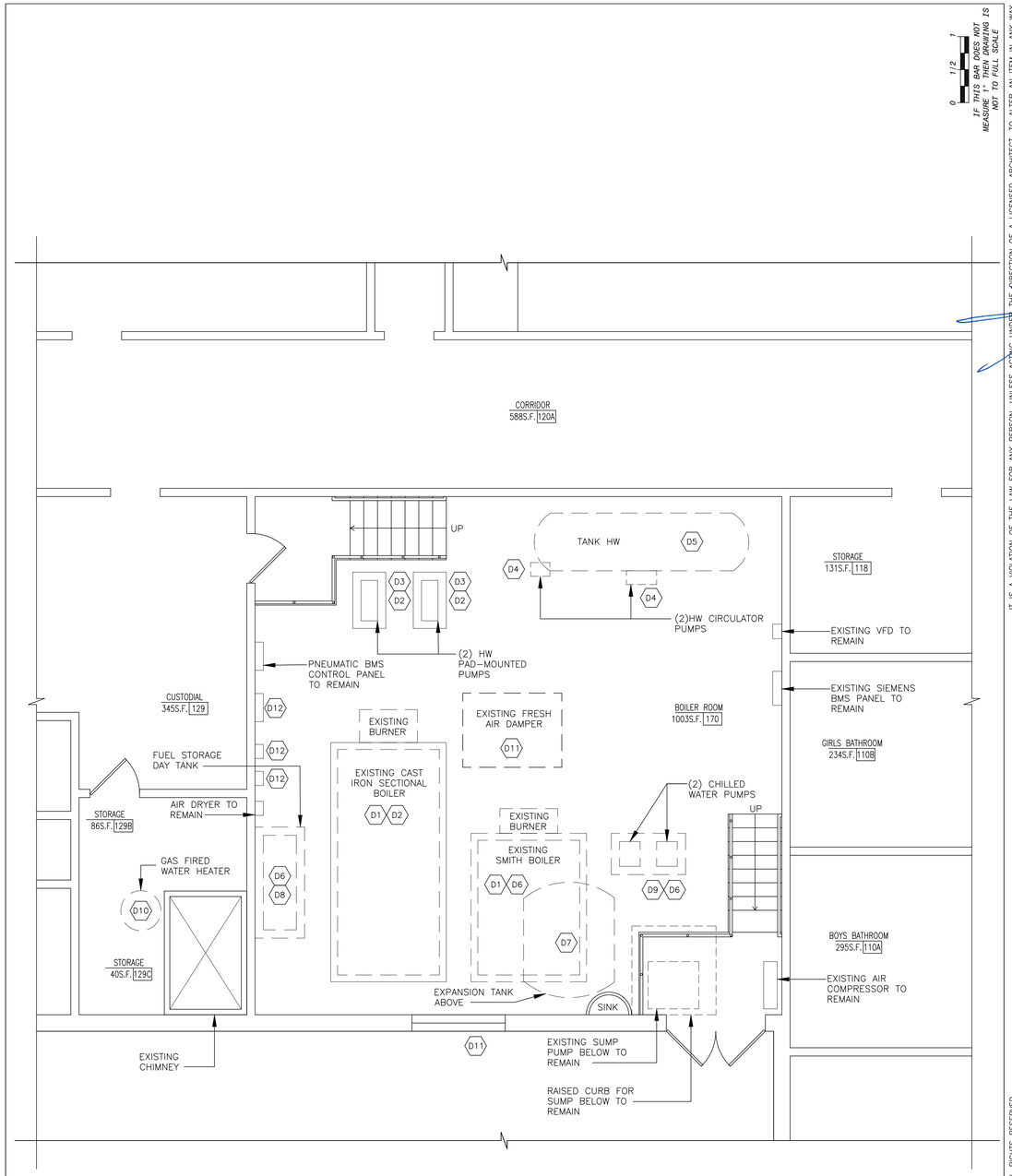

1 NRHSE BOILER ROOM DEMO PLAN

SCALE: 1/4" = 1'-0"

0 1/2 1
IF THIS BAR DOES NOT MEASURE 1, THEN DRAWING IS NOT TO FULL SCALE

IT IS A VIOLATION OF THE LAW FOR ANY PERSON, UNLESS ACTING UNDER THE DIRECTION OF A LICENSED ARCHITECT, TO ALTER AN ITEM IN ANY WAY.

No.	Date	Revisions
1	05–31–24	BIDDING DOCUMENTS

REGISTERED ARCHITECT JOHN PHIL GRILLI 028758 STATE OF NEW YORK
REG. EXP. DATE: 06–30–24

Drawn by	DE
Checked by	MS/JC
Project No.	44023
Scale	AS NOTED
Date	05–08–24

Mechanical & Electrical Engineer:

Structural Engineer:

NORTH ROCKLAND HIGH SCHOOL EXTENSION BOILER REPLACEMENT

SED# 50–02–01–06–0–007–016

65 CHAPEL STREET
CHESTER, NY 10923

COUNTY OF ROCKLAND

MICHAEL SHILALE ARCHITECTS, L.L.P.
140 Park Avenue New City, NY 10956 Tel 845-708-9200
www.shilale.com

© COPYRIGHT, MICHAEL SHILALE ARCHITECTS LLP, ALL RIGHTS RESERVED.

Drawing Title
BOILER ROOM DEMO PLAN

Drawing No.
D-101

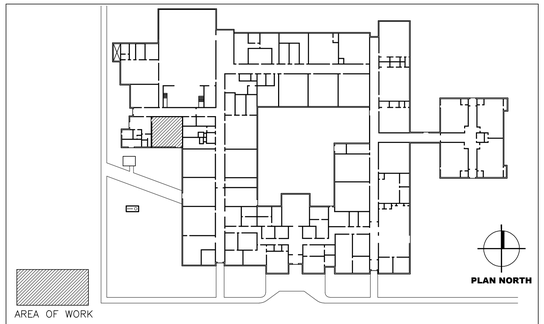

KEY PLAN

GENERAL NOTES

A1 PROVIDE NEW HIGH EFFICIENCY CONDENSING BOILER ON EXISTING HOUSEKEEPING PAD. SEE SCHEDULE OF BOILERS ON M–002

A2 BASE BID: EXISTING PAD–MOUNTED HOT WATER PUMPS TO REMAIN.
ALT. NO. 1: REMOVE AND REPLACE 2 NEW HOT WATER PAD–MOUNTED PUMPS AND INSTALL ON EXISTING HOUSEKEEPING PADS.

A3 PROVIDE NEW INDIRECT HOT WATER HEATER. SEE MECHANICAL DRAWINGS.

A4 PROVIDE NEW HOUSEKEEPING PAD.

A5 PROVIDE NEW TRANSITION HOOD FOR COMBUSTION AIR INTAKE VENT. SEE MECHANICAL DRAWINGS.

A6 PROVIDE NEW EXHAUST FLUE. SEE MECHANICAL DRAWINGS.

A7 HOT WATER CIRCULATING PUMPS TO BE REINSTALLED. SEE MECHANICAL DRAWINGS.

A8 FLASH PATCH EXISTING CONCRETE FLOOR WITH ARDEX AT LOCATION OF REMOVED HOUSEKEEPING PAD.

A9 PATCH MASONRY WALL AT ALL REMOVED PENETRATIONS. (2HR RATED MASONRY). SUBMIT UL DESIGN.

A10 INSTALL DOOR CLOSER ON EXISTING DOOR.

CONSTRUCTION KEY NOTES

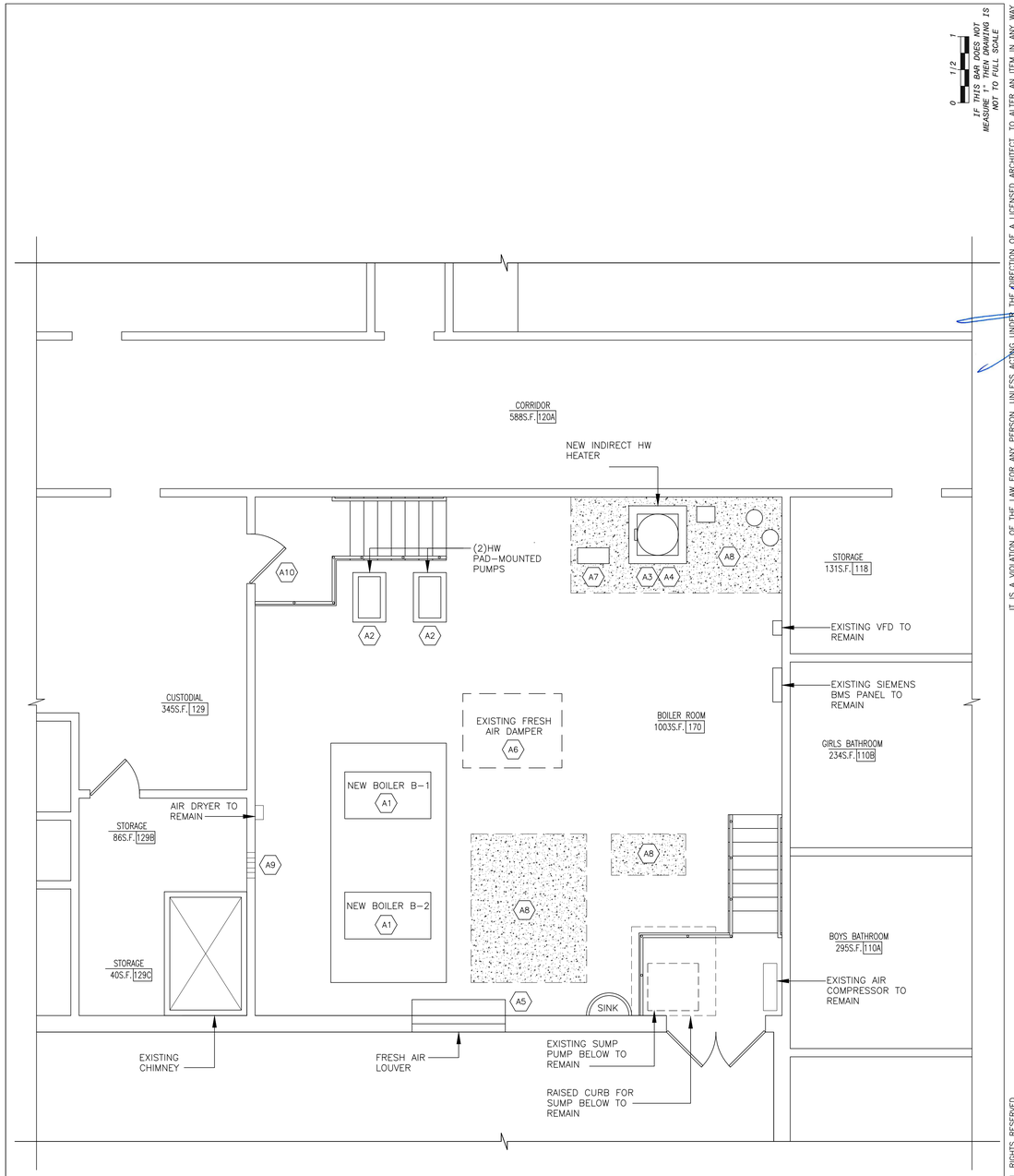

1 NRSHE BOILER ROOM FLOOR PLAN

SCALE: 1/4"=1"-0"

0 1/2 1
IF THIS BAR DOES NOT MEASURE 1, THEN DRAWING IS NOT TO FULL SCALE

No.	Date	Revisions
1	05–31–24	BIDDING DOCUMENTS

REGISTERED ARCHITECT JOHN PHIL GRILLI 028758 STATE OF NEW YORK
REG. EXP. DATE: 06–30–24

Drawn by	DE
Checked by	MS/JC
Project No.	44023
Scale	AS NOTED
Date	05–08–24

Mechanical & Electrical Engineer:

Structural Engineer:

NORTH ROCKLAND HIGH SCHOOL EXTENSION BOILER REPLACEMENT

SED# 50–02–01–06–0–007–016

85 CHAPEL STREET
CHESTNUT RIDGE, NY 10523

COUNTY OF ROCKLAND

MICHAEL SHILALE ARCHITECTS, L.L.P.
140 Park Avenue New City, NY 10956 Tel 845-708-9200
www.shilale.com

IT IS A VIOLATION OF THE LAW FOR ANY PERSON, UNLESS ACTING UNDER THE DIRECTION OF A LICENSED ARCHITECT, TO ALTER AN ITEM IN ANY WAY.

© COPYRIGHT, MICHAEL SHILALE ARCHITECTS LLP, ALL RIGHTS RESERVED.

Drawing Title
PROPOSED BOILER ROOM PLAN

Drawing No.
A-101

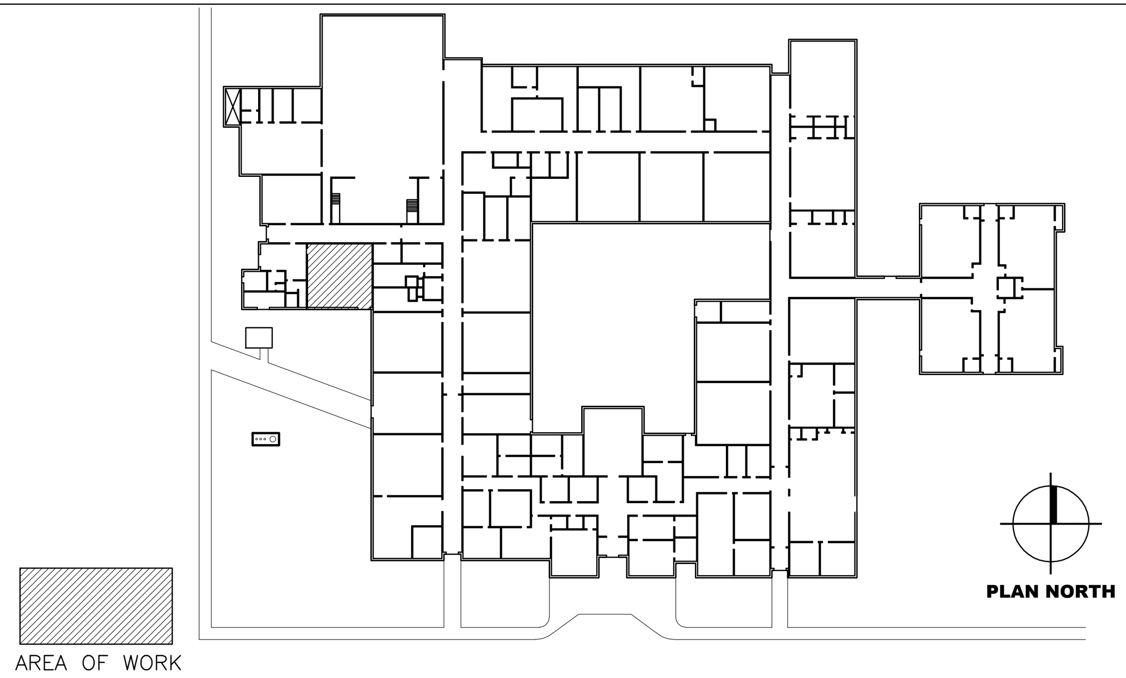

KEY PLAN

Symbol	Description
⊗	EXISTING ROOF DRAIN
○	EXISTING PIPE PENETRATION
	EXISTING CHIMNEY
	EXISTING MECHANICAL EXHAUST
	EXISTING ROOF PENETRATION
	EXISTING CURB
	EXISTING LADDER
CO	EXISTING CONDUIT
GL	EXISTING GAS LINE

ROOF LEGEND

- (A1) EXISTING AIR HOOD TO BE REMOVED.
- (A2) INSTALL NEW VENT THROUGH EXISTING ROOF OPENING. SEE DETAIL 2/A-102 FOR CURB DETAIL AND MECHANICAL DRAWINGS.

ROOF KEY NOTES

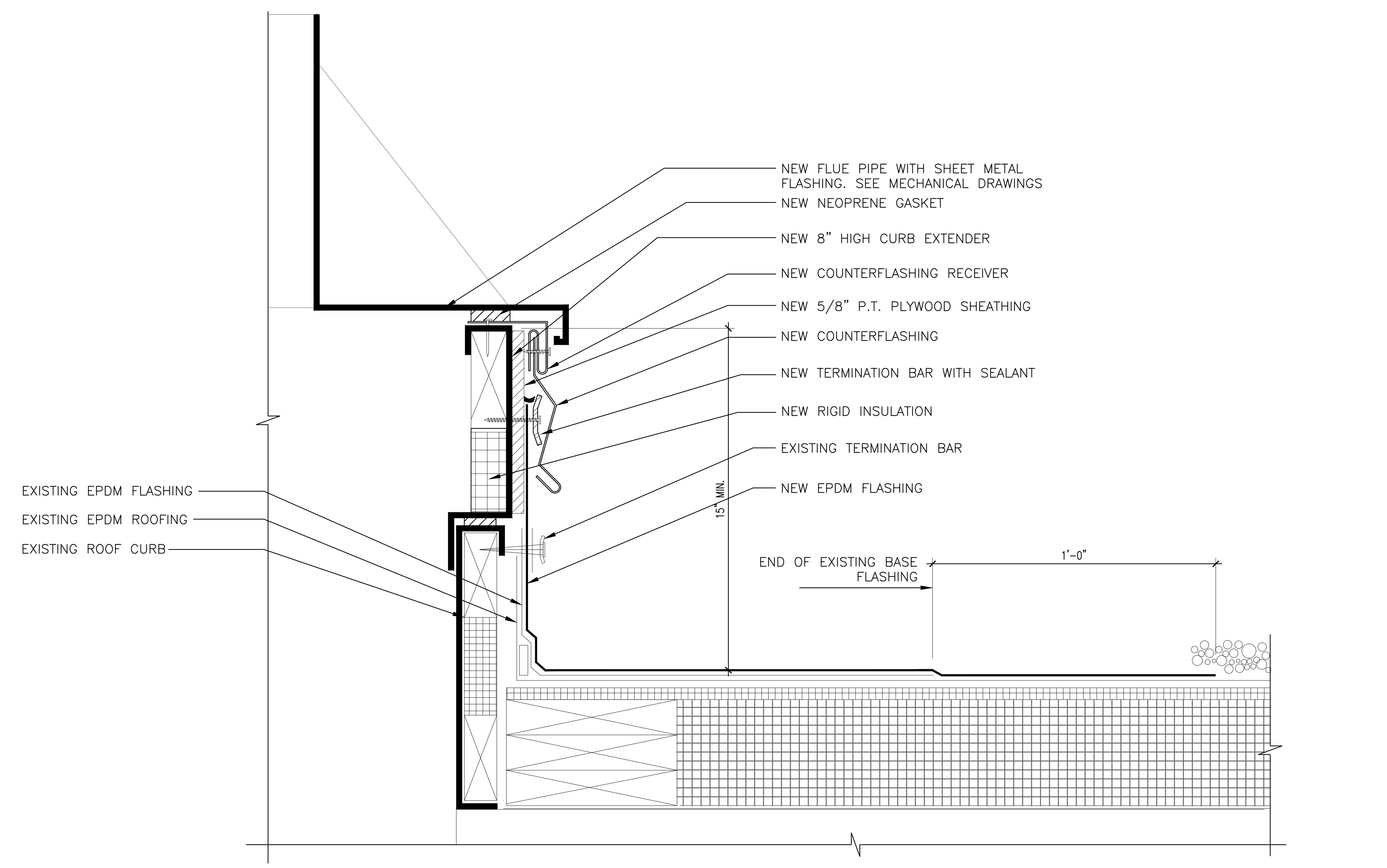

2 TYPICAL CURB ADAPTER DETAIL EPDM
SCALE: 3"=1'-0"

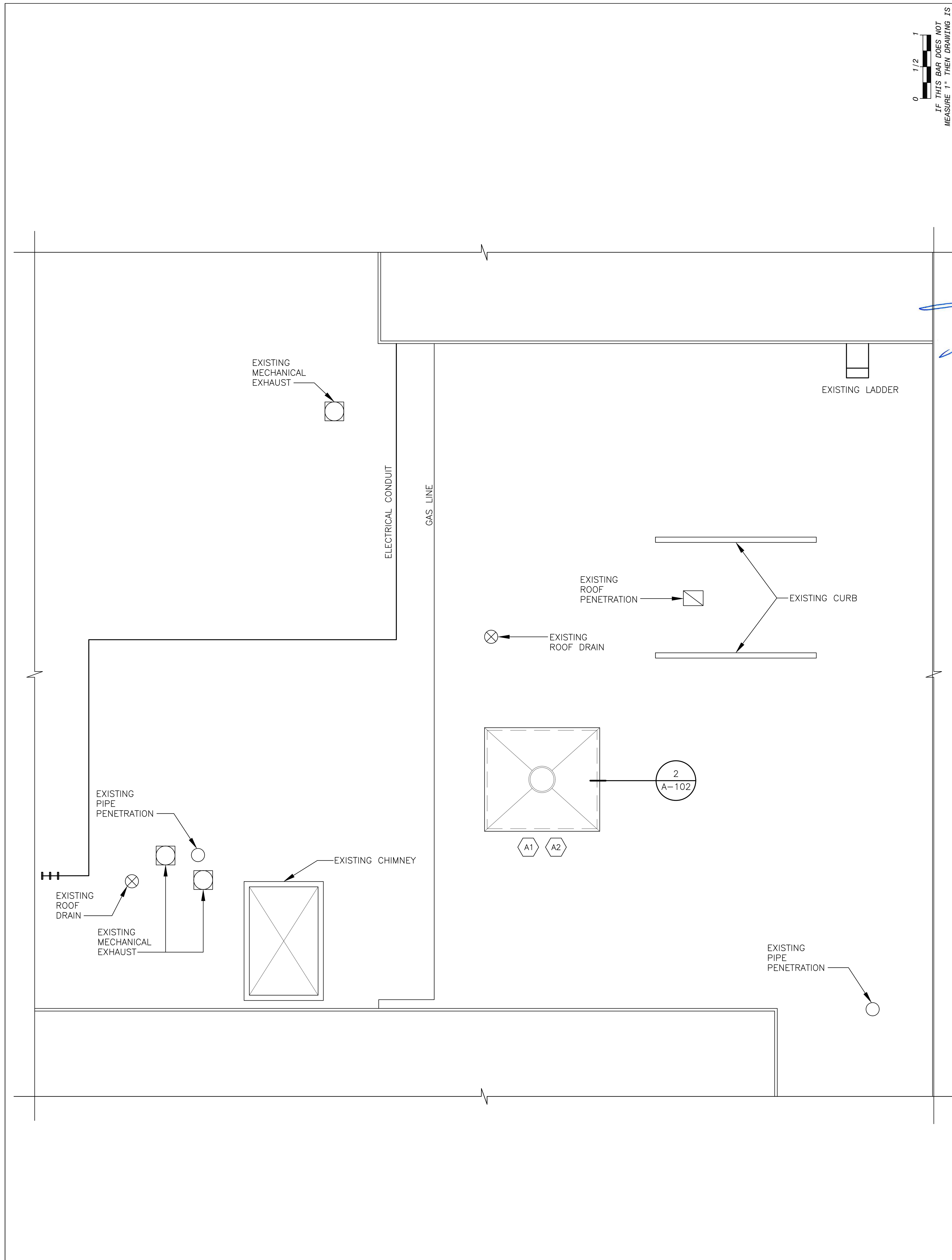

1 NRSHE BOILER ROOM ROOF PLAN
SCALE: 1/4"=1'-0"

No.	Date	Revisions
1	05-31-24	BIDDING DOCUMENTS

REGISTERED ARCHITECT — JOHN PHIL GIRILLI — 028758 — STATE OF NEW YORK
REG. EXP DATE: 06-30-24

IT IS A VIOLATION OF THE LAW FOR ANY PERSON, UNLESS ACTING UNDER THE DIRECTION OF A LICENSED ARCHITECT, TO ALTER AN ITEM IN ANY WAY.

Drawn by	DE
Checked by	MS/JC
Project No.	44023
Scale	AS NOTED
Date	05-08-24

Mechanical & Electrical Engineer:

Structural Engineer:

NORTH ROCKLAND HIGH SCHOOL EXTENSION BOILER REPLACEMENT

SED# 50-02-01-06-0-007-016

65 CHAPEL STREET GARNERVILLE, NY 10923 — COUNTY OF ROCKLAND

MICHAEL SHILALE ARCHITECTS, L.L.P.
140 Park Avenue New City, NY 10956 Tel 845-708-9200
www.shilale.com

© COPYRIGHT, MICHAEL SHILALE ARCHITECTS LLP, ALL RIGHTS RESERVED.

Drawing Title: BOILER ROOM ROOF PLAN

Drawing No. A-102

SAFETY NOTES:

1. SPECIAL PRECAUTIONS SHALL BE TAKEN BY THE CONTRACTOR SO THAT EQUIPMENT ON THE APPLICATION AND ITS INSTALLATION WILL NOT AFFECT THE FOLLOWING:
   - EGRESS TO AND FROM THE BUILDING FIRE SAFETY OR CREATE A FIRE HAZARD
   - STRUCTURAL SAFETY OF THE BUILDING.
   - ACCUMULATION OF DUST AND DEBRIS. THE CONTRACTOR SHALL LEAVE THE SITE BROOM CLEAN EACH DAY.
2. ASBESTOS MUST FIRST BE INVESTIGATED AND VERIFIED IN FIELD BEFORE ANY DEMOLITION OR CONSTRUCTION WORK TO BE PERFORMED. ASBESTOS FREE MUST BE CERTIFIED FOR ALL HVAC EQUIPMENT, DUCTWORK, AND ALL PIPING INSULATION.
3. CONSTRUCTION WORK SHALL BE CONFINED TO WORK AREAS NOTED ON THE DRAWINGS AND SHALL INVOLVE TEMPORARY INTERRUPTION OF HEATING, WATER AND ELECTRIC SERVICES TO THE BUILDING SYSTEMS ONLY AS SCHEDULED WITH NEW YORK CITY.
4. FIRE SAFETY: ALL BUILDING MATERIALS STORED IN CONSTRUCTION AREA, AND/OR IN ANY AREA OF THE BUILDING ARE TO BE SECURED IN A LOCKED AREA. ACCESS TO SUCH AREAS TO BE CONTROLLED BY THE FACILITY AND/OR GENERAL CONTRACTOR.
5. CONTRACTOR SHALL PROVIDE BARRICADES AROUND WORK AREAS AS REQUIRED TO PREVENT UNAUTHORIZED PERSONS FROM ENTERING THEREIN.
6. THE CONTRACTOR SHALL SUBMIT SAFETY PLAN FOR CONSTRUCTION MANAGER'S APPROVAL.
7. CONFINED SPACES: ALL WORK WITHIN CONFINED SPACES SHALL BE CONDUCTED IN ACCORDANCE WITH OSHA REGULATIONS.

SUMMARY OF WORK:

THE WORK OF THIS PROJECT INCLUDES BOILER REPLACEMENT AT NORTH ROCKLAND HIGH SCHOOL EXTENSION. PROVIDE MATERIALS AND SERVICES AS FOLLOWS. THE FOLLOWING IS NOT INTENDED TO BE A COMPLETE DESCRIPTION OF THE WORK; PERFORM THE WORK AS HEREINAFTER DESCRIBED IN THESE CONTRACT DOCUMENTS.

A. REMOVE EXISTING ABANDONED CHILLED WATER PUMPS AND ASSOCIATED PIPING AND SUPPORTS.
B. REMOVE EXISTING OIL TANK, DAY TANK AND UNDERGROUND FUEL OIL TANK AND ASSOCIATED PIPING.
C. REMOVE EXISTING DUAL FUEL CAST IRON BOILERS AND REPLACE WITH TWO(2) NEW GAS-FIRED CONDENSING BOILERS. REPLACE ASSOCIATED PIPING, VALVES, AND CONTROLS SERVING THE PERIMETER RADIATORS. REPLACE GLYCOL FEED SYSTEM AND EXPANSION TANKS FOR HOT WATER LOOP.
D. EXISTING HOT WATER PUMPS AND DOMESTIC WATER PUMPS ARE TO REMAIN.
E. REMOVE EXISTING DOMESTIC HOT WATER TANK AND SUPPORTS.
F. REMOVE EXISTING GAS FIRED WATER HEATER AND DISCONNECT PIPING.
G. PROVIDE NEW INDIRECT HOT WATER HEATER FOR DOMESTIC WATER USE. RELOCATE EXISTING DOMESTIC WATER PUMPS.
H. PERFORM ALL REQUIRED CLEANING, TESTING AND BALANCING OF THE NEW EQUIPMENT.
I. PERFORM COMMISSIONING OF THE NEW EQUIPMENT.
J. ALTERNATE #1, REPLACE THE HYDRONIC WATER PUMPS WITH NEW IN KIND.

CALCULATIONS

COMBUSTION AIR INTAKE REQUIREMENTS FOR THE BOILERS.

1. DESIGN COMPLIES WITH THE MANUFACTURER'S INSTRUCTIONS AS PER NYS FGC 304.1

HVAC DESIGN CRITERIA

A. SITE (BASED ON NEAREST AVAILABLE DATA: ASHRAE 2021 HANDBOOK CLIMATIC DESIGN INFORMATION, WESTCHESTER CO, NY):
   1. 41.07°N, 73.71°W
   2. ELEVATION: 397 FT
   3. CLIMATE ZONE 5A.

B. OUTSIDE DESIGN CONDITIONS (BASED ON NEAREST AVAILABLE DATA: ASHRAE 2013 CLIMATIC DESIGN INFORMATION, WESTCHESTER CO, NY):
   1. HEATING DB (99.6%): 8.7°F DB
   2. COOLING DB/MCWB (1%): 86.4°F DB, 71.9°F WB

C. INSIDE DESIGN CONDITIONS (PER NYSED MANUAL OF PLANNING STANDARDS S602-6 B. AND 2015 ASHRAE HANDBOOK CH 7 TABLE 6):
   1. HEATING INDOOR SETPOINT: 72°F
   2. COOLING INDOOR SETPOINT: 78°F, 60% RH

SEQUENCE OF OPERATIONS

1. SEE SPECIFICATION SECTION 230993 AND DRAWING M401.

MECHANICAL DEMOLITION NOTES:

1. DEMOLITION/RELOCATIONS: CONTRACTOR SHALL BE RESPONSIBLE FOR DEMOLITION AND RELOCATION'S OF SERVICES, EQUIPMENT AND MATERIAL RELATING TO HIS/HER RESPECTIVE TRADE. INCLUDE IN BID THE COST TO PROVIDE DEMOLITION OF ALL ELECTRICAL EQUIPMENT AND SYSTEMS ASSOCIATED WITH THE RENOVATION WORK. ALL DEMOLITION WORK SHALL COORDINATE WITH OWNER.
2. WHERE EXISTING WALLS, FLOORS OR CEILINGS ARE REMOVED OR PENETRATED, AND WHERE EXISTING END WALLS OF THE BUILDING ARE POINTS OF CONNECTION OF ADDITIONS, ALL SERVICES, PIPING, CONDUIT, CONTROL AND/OR SWITCH DEVICES, LIGHTS, OR OTHER HVAC, PLUMBING, FIRE PROTECTION OR ELECTRICAL EQUIPMENT SHALL BE REMOVED (AND/OR RELOCATED WHERE THEY MUST REMAIN IN SERVICE, OR SERVE, AREAS BEYOND THE IMMEDIATE WORK) CONTRACTOR SHALL FIELD VERIFY CONDITIONS AT THE SITE.
3. PRIOR TO DEMOLITION CONTRACTOR SHALL REVIEW WITH OWNER ALL MATERIALS TO BE REMOVED. SHOULD THE OWNER OPT TO KEEP ANY MATERIALS THE CONTRACTOR SHALL REMOVE AND DELIVER THE PARTS TO THE OWNER ON THE SITE WHERE SO DIRECTED. OTHERWISE ALL DEMOLISHED OR REMOVED MATERIALS SHALL BECOME THE PROPERTY OF THE CONTRACTOR AND SHALL BE REMOVED FROM THE SITE AND BE DISPOSED OF IN A LEGAL MANNER.
4. DEMOLITION SHALL INCLUDE REMOVAL OF ALL PARTS AND PIECES IN THEIR ENTIRETY BACK TO POINTS INDICATED OR IF NOT INDICATED BACK TO THEIR POINT OF SOURCE. REMOVE CONDUCTORS FROM REMAINING CONDUITS WHERE IT IS INDICATED. WHERE CONDUCTORS REMAINED IN CONDUITS-DISCONNECT, ISOLATE AND CAPPED THEM TO ENSURE SAFETY AND PROTECTION. WHERE CONDITIONS PROHIBIT TOTAL REMOVAL OF THE WORK, THE REMAINING PORTION SHALL BE CUT FLUSH WITH THE SURROUNDING SURFACE AND BE CAPPED, PLUGGED OR SEALED AND THE SURROUNDING SURFACE SHALL BE REFINISHED IN AN APPROVED MANNER.
5. MAINTAIN EXISTING UTILITIES INDICATED OR REQUIRED TO REMAIN, KEEP IN SERVICE, AND PROTECT AGAINST DAMAGE DURING DEMOLITION OPERATIONS. DO NOT INTERRUPT EXISTING UTILITIES SERVING OCCUPIED OR USED FACILITIES, EXCEPT WHEN SCHEDULED WITH THE OWNER.
6. DO NOT REMOVE EXISTING STRUCTURAL WORK. DO NOT REMOVE OPERATIONAL ELEMENTS AND SAFETY-RELATED COMPONENTS IN A MANNER RESULTING IN A REDUCTION OF CAPACITIES TO PERFORM IN THE MANNER INTENDED OR RESULTING IN DECREASED OPERATIONAL LIFE, INCREASED MAINTENANCE, OR DECREASED SAFETY.
7. REMOVALS, DISCONNECTIONS, AND RELOCATIONS SHALL BE PERFORMED BY WORKMEN SKILLED IN THE TRADE INVOLVED AND SHALL BE EMPLOYED BY A CONTRACTOR LICENSED IN THE TRADE INVOLVED. ALL WORK SHALL BE DONE IN ACCORDANCE WITH ACCEPTED TRADE PRACTICES.
8. PROVIDE ADEQUATE TEMPORARY SUPPORT FOR WORK TO REMAIN, TO PREVENT FAILURE. DO NOT ENDANGER OTHER WORK.
9. PROTECTION: PROVIDE ADEQUATE PROTECTION WHERE REQUIRED FOR THE PRESENT BUILDING AND ITS CONTENTS. TEMPORARY DUSTPROOF BARRIERS AND BARRICADES SHALL BE ERECTED WHERE REQUIRED FOR PROTECTION OF PERSONNEL, PROTECTION FROM DUST AND DIRT, FOR SECURITY, FIRE AND WEATHER PROTECTIVE REASONS. CONTRACTOR SHALL TAKE EVERY PRECAUTION AGAINST FIRE BY EMPLOYING FIRE DEPARTMENT TYPE HOSES AND PORTABLE FIRE EXTINGUISHERS AS REQUIRED BY OSHA AND/OR THE OWNER'S INSURANCE UNDERWRITER.
10. USE TEMPORARY ENCLOSURES, OR OTHER SUITABLE METHODS TO LIMIT DUST AND DIRT RISING AND SCATTERING TO LOWEST PRACTICAL LEVEL. COMPLY WITH GOVERNING REGULATIONS PERTAINING TO ENVIRONMENTAL PROTECTION.
11. ALL EXISTING EQUIPMENT REQUIRED TO BE REUSED SHALL BE CLEANED, RECONDITIONED, CALIBRATED AND ADJUSTED. IN ALL INSTANCES WHERE CONTRACTOR FINDS THAT EXISTING EQUIPMENT IS DEFECTIVE TO THE POINT WHERE IT CANNOT BE PROPERLY RESTORED AND WILL NOT OPERATE PROPERLY, HE SHALL REPORT THE SPECIFIC INSTRUMENTS OR EQUIPMENT TO THE OWNER/ENGINEER FOR DIRECTIONS.
12. TEMPORARY SHUTDOWNS OF SERVICE OF EXISTING ELECTRICAL, HEATING, AIR CONDITIONING, AND VENTILATION SYSTEMS SHALL BE PERFORMED WITH A MINIMUM OF DISRUPTION OF SERVICE, HELD TO AN ABSOLUTE MINIMUM DURATION OF TIME, AND ONLY AFTER HAVING NOTIFIED THE BUILDING OPERATIONS MANAGEMENT AT LEAST TWO WEEKS IN ADVANCE AND HAVING RECEIVED THEIR PERMISSION IN WRITING, AT LEAST TWO WEEKS PRIOR TO THE SCHEDULED SHUTDOWN. COMMUNICATIONS SHALL BE RELAYED THROUGH THE CONSTRUCTION MANAGER.
13. ELECTRICAL CONTRACTOR SHALL RING OUT AND IDENTIFY ALL CIRCUITS REMAINING IN CONTRACT AREA, AFTER DEMOLITION. REMOVE ALL CIRCUITS BACK TO POINT OF SOURCE. MARK PANEL CIRCUITS NO LONGER IN USE "SPARE".

HVAC NOTES:

1. THE WORK SHALL COMPLY WITH THE 2020 BUILDING CODE OF NYS. IN ADDITIONS, THE WORK SHALL COMPLY WITH ALL OTHER RELEVANT CODES, RULES AND ORDINANCES OF THIS STATE OF NEW YORK, ALL LOCAL, STATE AND FEDERAL AUTHORITIES HAVING JURISDICTION.
2. CONTRACTOR SHALL PAY ALL FEES AND TAXES, OBTAIN ALL PERMITS AND APPROVALS, FILE THE REQUIRED DOCUMENTS AND CAUSE ALL INSPECTIONS.
3. CONTRACTOR SHALL PROVIDE ALL WORK, EQUIPMENT, LABOR AND MATERIAL REQUIRED FOR A COMPLETE AND TROUBLE FREE INSTALLATION.
4. ALL DUCTWORK ELBOWS SHALL BE EITHER LONG RADIUS OR SQUARE WITH TURNING VANES.
5. CONTRACTOR SHALL SUBMIT SHOP DRAWINGS FOR ALL EQUIPMENT, PIPING, CONTROLS, DUCTWORK, REGISTERS, SUPPORTS, DAMPERS, AND ACCESSORIES PRIOR TO FABRICATION AND INSTALLATION. SUBMIT ALL REPORTS FOR REVIEW SUCH AS TESTING, ADJUSTING, AND BALANCING, AND COMMISSIONING.
6. CONTRACTOR SHALL VERIFY ALL EXISTING FIELD CONDITIONS AND NOTIFY OWNER OF ANY DISCREPANCIES BEFORE COMMENCING WORK.
7. PROVIDE AN AIR BALANCE REPORT FOR THE EQUIPMENT SHOWN ON THE DRAWINGS.
8. ALL EQUIPMENT AND MATERIALS SHALL BE INSTALLED IN A NEAT AND WORKMANLIKE MANNER TO THE SATISFACTION OF THE OWNER.
9. EXCEPT AS NOTED, ALL MATERIAL AND EQUIPMENT SHALL BE NEW AND IN GOOD CONDITION. WHERE APPLICABLE BY CODE AND/OR THESE SPECIFICATIONS, EQUIPMENT AND MATERIALS SHALL BE LABELED BY THE REQUISITE GOVERNING AGENCY.
10. SURVEY THE INSTALLATION SITE PRIOR TO BID. DETERMINE THE CONSTRAINTS OF THE EXISTING AVAILABLE SPACE PERTAINING TO EQUIPMENT SIZE AND CONFIGURATION AND EXAMINE THE CONDITIONS UNDER WHICH THE EQUIPMENT WILL BE INSTALLED. VERIFY ALL MEASUREMENTS AT THE SITE. THE CONTRACTOR SHALL BE RESPONSIBLE FOR DIMENSIONAL COMPATIBILITY OF THE DUCTWORK AND EQUIPMENT WITH THE SPACE.
11. SHIP AND DELIVER EQUIPMENT KNOCKED DOWN AS NECESSARY TO FIT THROUGH EXISTING BUILDING OPENINGS. VERIFY IN FIELD THE CONSTRAINTS OF THE EXISTING BUILDING PRIOR TO FABRICATION OF EQUIPMENTS. INCLUDE IN THE BID ALL COSTS ASSOCIATED WITH RIGGING AND DELIVERY OF EQUIPMENT AS REQUIRED BY THE EXISTING BUILDING CONDITIONS.
12. SCHEDULE AND NOTIFY THE OWNER AND BUILDING MANAGEMENT IN ADVANCE PRIOR TO SHUTDOWN OF ANY SERVICES.
13. UPON COMPLETION OF THE PROJECT, PROVIDE AS-BUILT DRAWINGS TO THE OWNER. FOR QUANTITY OF COPIES, REFER TO GENERAL SPECIFICATIONS OR AS DIRECTED BY ARCHITECT.
14. IT IS THE INTENT OF THESE CONTRACT DOCUMENTS TO CALL FOR AN INSTALLATION THAT IS COMPLETE IN EVERY RESPECT. IF AN ITEM OF WORK IS SHOWN ON THE DRAWINGS, IT SHALL BE CONSIDERED SUFFICIENT FOR INCLUSION IN THE CONTRACT. THE CONTRACTOR SHALL FURNISH AND INSTALL ALL MATERIAL AND EQUIPMENT USUALLY FURNISHED OR NEEDED TO MAKE A COMPLETE INSTALLATION, WHETHER SPECIFICALLY MENTIONED OR NOT.
15. RENDER FULL COOPERATION TO OTHER TRADES AND COORDINATE THE WORK WITH OTHER TRADES. THIS CONTRACTOR SHALL ASSIST IN WORKING OUT SPACE CONDITIONS.
16. PERFORM ALL CUTTING AND PATCHING NECESSARY FOR THE PROPER INSTALLATION OF THIS WORK. REPAIR ANY DAMAGE DONE BY THIS WORK AND REPAIR ANY DAMAGE CAUSED.
17. ON ACCEPTANCE OF CONTRACT, CONTRACTOR AGREES TO GUARANTEE THE WORK AND EQUIPMENT FOR A PERIOD OF NOT LESS THAN ONE (1) YEAR FROM DATE OF INITIAL OPERATION. MANUFACTURED EQUIPMENT SHALL CARRY FULL PERIOD OF MANUFACTURER'S GUARANTEE, AND SHALL NOT BE LESS THAN ONE (1) YEAR. COMPRESSORS SHALL CARRY AN EXTENDED WARRANTY OF FIVE YEARS.

GENERAL NOTES

1. ALL WORK SHALL BE PERFORMED IN STRICT ACCORDANCE WITH THE REQUIREMENTS OF THE 2020 NYS BUILDING CODE, 2020 NYS MECHANICAL CODE, AND 2020 NYS ENERGY CONSERVATION CODE, AND ALL GOVERNING LOCAL CODES, LAWS, AND REGULATIONS.
2. PROVIDE A COMPLETE OPERABLE SYSTEM IN A WORKMANLIKE MANNER. OUTLINE DESCRIPTION AND EQUIPMENT; DO NOT LIMIT CONTRACTOR'S LIABILITY FOR THE INSTALLATION OF A COMPLETE OPERABLE SYSTEM
3. THE CONTRACTOR SHALL FIELD VERIFY AND BE RESPONSIBLE FOR ALL DIMENSIONS AND CONDITIONS ON THE JOB AND NOTIFY THE OWNER OF ANY VARIATIONS FROM THE DIMENSIONS AND CONDITIONS SHOWN IN THESE DOCUMENTS. ALL DIMENSIONS AND EQUIPMENT ARE SHOWN DIAGRAMMATICALLY, COORDINATE WITH ACTUAL FIELD CONDITION.
4. BEFORE COMMENCING WORK, THE CONTRACTOR SHALL FILE ALL REQUIRED CERTIFICATES OF INSURANCE WITH THE BUILDING DEPARTMENT. OBTAIN ALL REQUIRED PERMITS AND PAY ALL FEES REQUIRED.
5. COORDINATION OF ALL WORK UNDER THIS CONTRACT SHALL BE MAINTAINED TO ENSURE THE QUALITY AND TIMELY COMPLETION OF THE WORK/PROJECT.
6. THE CONTRACTOR SHALL PERFORM ALL CUTTING AND PATCHING REQUIRED TO COMPLETE THE WORK OR TO MAKE ITS PARTS FIT TOGETHER PROPERLY WITHOUT COMPROMISING THE QUALITY OF THE WORK. RESTORE WALLS AND CEILINGS TO MATCH EXISTING.
7. THE CONTRACTOR SHALL BE RESPONSIBLE FOR ADEQUATELY BRACING AND PROTECTING ALL WORK DURING CONSTRUCTION AGAINST DAMAGE, BREAKAGE, COLLAPSE, DISTORTIONS, AND OFF ALIGNMENTS ACCORDING TO CODES AND STANDARDS OF GOOD PRACTICE.
8. THE TERM "FINISH FLOOR" SHALL MEAN THE NORMAL FINISHED SURFACE OF THE FLOOR LEVEL. ALL ELEVATIONS GIVEN FOR EXISTING BUILDINGS ARE TO FINISHED FLOOR. THE CONTRACTOR SHALL FIELD VERIFY ALL ELEVATIONS FOR EXISTING STRUCTURES PRIOR TO THE COMMENCEMENT OF WORK.
9. THE CONTRACTOR SHALL PATCH AND REPAIR ALL FLOORS, WALLS CEILINGS, ETC. DAMAGED OR EXPOSED DUE TO WORK OR REMOVALS AND FINISH TO MATCH ADJOINING SURFACES.
10. ALL NEWLY INSTALLED, PATCHED WORK AND ALL AFFECTED AREAS SHALL BE PAINTED, ALL PAINTING WORK SHALL BE PERFORMED TO COVER THE ENTIRE HORIZONTAL OR VERTICAL SURFACE TO THE CLOSEST CORNER IN ALL FOUR DIRECTIONS. COLOR TO MATCH EXISTING CONDITIONS.
11. WORK NOT SHOWN OR SPECIFIED, BUT NECESSARY FOR PROPER AND ACCEPTABLE CONSTRUCTION, INSTALLATION OR OPERATION OF ANY PART OF THE WORK AS DETERMINED BY THE OWNER, SHALL BE INCLUDED IN THE WORK THE SAME AS IF HEREIN SPECIFIED OR INDICATED.
12. DURING CONSTRUCTION, TEMPORARY BAFFLES TO SEAL OPENINGS TO PREVENT DUST AND DIRT FROM FILTERING INTO OCCUPIED AREAS ARE TO BE PROVIDED BY CONTRACTOR.
13. ALL WORK SHALL BE INSTALLED SO THAT ALL PARTS REQUIRED ARE READILY ACCESSIBLE FOR INSPECTION, OPERATION, MAINTENANCE AND REPAIR.
14. CONTRACTOR SHALL MAINTAIN FREE AND UNOBSTRUCTED ACCESS FROM ALL FLOORS AND ADJACENT SPACES INTO THE EXISTING FIRE STAIRS TO OUTSIDE OF THE BUILDING AT ALL TIMES.
15. CONTRACTOR SHALL MAINTAIN FREE FROM DEBRIS AND ACCUMULATED REFUSE, AND SHALL HAVE SOLE RESPONSIBILITY FOR PROTECTING ALL DANGEROUS AREAS FROM ENTRY BY UNAUTHORIZED PARTIES. SITE WILL BE LEFT BROOM CLEAN AT THE END OF EACH WORKING DAY.
16. PROVIDE BARRICADES AROUND WORK AREAS AS REQUIRED TO PREVENT BUILDING OCCUPANTS AND OTHER UNAUTHORIZED PERSONS FROM ENTERING THEREIN.
17. CONTRACTOR IS TO NOTIFY IMMEDIATELY THE OWNER OF ANY HAZARDOUS MATERIALS ENCOUNTERED IN ENCLOSED SPACES. ANY SUCH MATERIALS SHALL BE PROMPTLY TESTED AND REMOVED BY A QUALIFIED CONSULTANT AS PER D.O.B. STANDARDS & THE LAW.
18. CONTRACTOR SHALL RELOCATE AND PATCH ANY EXISTING ITEMS INTERFERING WITH THE INSTALLATION OF NEW WORK WHETHER SHOWN OR NOT ON THE DRAWINGS AT NO COST TO OWNER.
19. THERE WILL BE NO CHANGE IN USE, EGRESS OR OCCUPANCY BECAUSE OF THE WORK OF THIS CONTRACT.
20. THE MECHANICAL CONTRACTOR SHALL PROVIDE POWER SUPPLIES, ELECTRICAL WIRING AND CONDUIT FOR POWER AND CONTROL TO PNEUMATIC DAMPER AND VALVE OPERATORS, THERMOSTATS, AUTOMATIC CONTROL INSTRUMENTATION. COORDINATE WITH THE ELECTRICAL CONTRACTOR TO PROVIDE A COMPLETE AND FUNCTIONAL SYSTEM.
21. FOR POWERED EQUIPMENT INTENDED FOR DEMOLITION, COORDINATE WITH THE ELECTRICAL TRADE TO ENSURE THAT POWER SUPPLIES AND DISCONNECT SWITCHES ASSOCIATED WITH THE EQUIPMENT ARE SHUT-OFF AND DISCONNECTED.
22. TEMPORARY SHUTDOWNS OF SERVICE OF EXISTING ELECTRICAL, STEAM, HEATING, AIR CONDITIONING AND VENTILATION SYSTEMS SHALL BE PERFORMED WITH A MINIMUM OF DISRUPTION OF SERVICE, HELD TO AN ABSOLUTE MINIMUM DURATION OF TIME, AND ONLY AFTER HAVING NOTIFIED THE BUILDING OPERATIONS MANAGEMENT AT LEAST TWO WEEKS IN ADVANCE AND HAVING RECEIVED THEIR PERMISSION IN WRITING, AT LEAST TWO WEEKS PRIOR TO THE SCHEDULED SHUTDOWN. COMMUNICATIONS SHALL BE RELAYED THROUGH THE COSNTRUCTION MANAGER.
23. PROVIDE EQUIPMENT MAINTENANCE MANUALS AND REQUIRED EQUIPMENT LABELS FOR ALL MECHANICAL, ELECTRICAL AND SERVICE HOT WATER HEATING EQUIPMENT. TO THE OWNER WITHIN 90 DAYS AFTER SYSTEM ACCEPTANCE.
24. WHERE MANUFACTURERS NAMES AND PRODUCT NUMBERS ARE INDICATED ON THE DRAWINGS IT SHALL BE CONSTRUED TO MEAN THE ESTABLISHING OF QUALITY AND PERFORMANCE STANDARDS OF SUCH ITEMS. ALL OTHER PRODUCTS MUST BE SUBMITTED TO THE ENGINEER FOR APPROVAL BEFORE THEY SHALL BE DEEMED EQUAL.
25. ALL WORK ON THESE DRAWINGS SHALL BE CONSIDERED NEW WORK WHETHER STATED OR NOT EXCEPT WHERE SPECIFICALLY NOTED AS "EXISTING TO REMAIN".
26. DETAILS NOT SHOWN OR SPECIFIED, BUT NECESSARY FOR PROPER AND ACCEPTABLE CONSTRUCTION, INSTALLATION OR OPERATION OF ANY PART OF THE WORK AS DETERMINED BY THE ENGINEER, SHALL BE INCLUDED IN THE WORK THE SAME AS IF HEREIN SPECIFIED OR INDICATED.
27. THE WORD "PROVIDE" USED ON DRAWINGS AND SPECIFICATIONS ASSOCIATED WITH THIS PROJECT MEANS "FURNISH AND INSTALL". WHEN ONLY ONE PART OF ACTION IS REQUIRED, EITHER "FURNISH" OR "INSTALL" WILL BE USED ACCORDINGLY (TYP., U.O.W.N.).
28. ALL DISCONNECT SWITCHES, STARTERS, AND VARIABLE FREQUENCY DRIVES SHALL BE FURNISHED BY MECHANICAL CONTRACTOR AND INSTALLED BY ELECTRICAL CONTRACTOR.
29. DESIGN LOADS ASSOCIATED WITH HEATING, VENTILATING, AND AIR CONDITIONING HAVE BEEN DETERMINED IN ACCORDANCE WITH ANSI/ASHRAE/ACCA STANDARD 183.

No.	Date	Revisions
1	05/31/24	BIDDING DOCUMENTS

STATE OF NEW YORK · PETER CATAPANO · 054038 · LICENSED PROFESSIONAL ENGINEER
REG. EXP DATE: 10-31-26

Drawn by: WM
Checked by: PC
Project No.: 44023
Scale: AS SHOWN
Date: 05/31/2024

Mechanical & Electrical Engineer: GREENMAN PEDERSEN, INC
2 EXECUTIVE BOULEVARD, SUITE 202, SUFFERN, NY 10901

Structural Engineer:

NORTH ROCKLAND HIGH SCHOOL EXTENSION BOILER REPLACEMENT
HIGH SCHOOL EXT SED# 05-02-01-06-0-007-016
65 Chapel Street, Garnerville, NY 10923
COUNTY OF ROCKLAND

MICHAEL SHILALE ARCHITECTS, L.L.P.
140 Park Avenue New City, NY 10956 Tel 845-708-9200
www.shilale.com

© COPYRIGHT, MICHAEL SHILALE ARCHITECTS, ALL RIGHTS RESERVED.

Drawing Title: MECHANICAL GENERAL NOTES

Drawing No.: M-001

ALTERNATE #1

WATER PUMP SCHEDULE

UNIT NUMBER		P-1, P-2
LOCATION		MECHANICAL RM
SYSTEM SERVICE		BOILER B-1, B-2
TYPE		BASE MOUNTED END SUCTION
PUMP DATA	IMPELLER DIA. (IN)	9.5
	SUCTION CONN. (IN)	2.5
	DISCHARGE CONN. (IN)	2
	CAPACITY (GPM)	150
	TOTAL HD (FT.)	70
	WORKING FLUID	WATER - 30% PG
	FLUID TEMP °F	160
MOTOR	TYPE	NEMA PREMIUM, VFD READY
	H.P.	7.5
	RATED R.P.M.	1800
	DUTY POINT R.P.M.	1538
	ENCL. TYPE	ODP
	V/PH/HZ	460/3/60
	DUTY POINT BHP	3.56
	DUTY POINT EFF. (%)	72.8
OPERATING WEIGHT (LB)		350
PUMP BASE DIMENSIONS (L x W) (IN)		35 x 15
BASIS OF DESIGN	MANUFACTURER	BELL & GOSSETT
	MODEL	e-1510-2BD-SS-213T

REMARKS
1. PROVIDE OPERATIONS AND MAINTENANCE MANUALS.
2. PROVIDE NEW 6" TALL EQUIPMENT PAD, EXTEND 6" BEYOND EQUIPMENT BASE IN ALL DIRECTIONS.
3. PROVIDE VIBRATION ISOLATORS.
4. PROVIDE VFD FOR ALL UNITS WITH 5 MOTOR HP AND GREATER. PROVIDE MOTOR STARTER/DISCONNECT FOR ALL OTHER PUMPS.
5. ELECTRICAL MOTORS SHALL MEET THE MINIMUM EFFICIENCY REQUIREMENTS OF TABLES C405.8(1) THOUGH C405.8(4) WHEN TESTED AND RATED IN ACCORDANCE WITH THE DOE 10 CFR 431.

EXISTING CIRCULATOR PUMP

P-3: BELL & GOSSETT, SERIES 60 IN-LINE, MODEL #601, APPROX. 150 GPM

P-4: TACO, SERIES 1600 IN-LINE, MODEL# 1641C354, APPROX. 150 GPM

WATER MAKE-UP UNIT

UNIT NO.		MU-1
PUMP DATA	FLOW RATE (GPM)	5
	MAX. PRESSURE (PSIG)	60
	RPM	3600
	HP	3/4
	V/PH/Hz	115/1/60
TANK SIZE (GAL)		55
UNIT DIMENSIONS (LxWxH)(IN)		30 x 30 x 60
UNIT WEIGHT (LBS)		600

REMARKS:
1. PROVIDE A PACKAGED MAKE-UP UNIT WHICH SHALL BE CAPABLE OF MAINTAINING THE SYSTEM FILL PRESSURE AT 30 PSIG. PROVIDE A POLYETHYLENE TANK WITH REMOVABLE LID, STRAINER, ISOLATION VALVES, PUMP WITH OPEN DRIP PROOF MOTOR, CHECK/BALANCING VALVE, EXPANSION TANK, DISCHARGE PRESSURE GAUGE, STEEL PIPING, LOW LEVEL CUT-OUT, AND CONTROL/ALARM PANEL WITH INDICATOR LIGHTS IN A NEMA 4 ENCLOSURE.
2. REFER TO DETAIL 7/M502 FOR PIPING AND INSTALLATION.
3. PROVIDE OPERATION AND MAINTENANCE MANUAL.
4. BASIS OF DESIGN: BELL & GOSSETT GMU-60.

COMBUSTION AIR DAMPER SCHEDULE

MARK	SERVICE	SIZE (Ø, IN)	BASIS OF DESIGN
D-1	COMBUSTION AIR	20	RUSKIN CD50

BOILER-BURNER UNIT SCHEDULE

UNIT NO		B-1, B-2
LOCATION		MECHANICAL ROOM
TYPE		CONDENSING
RATING	GROSS I.B.R. OUTPUT (BTU/HR)	1,900,000
	MIN OVERALL BOILER EFFICIENCY (%)	94.6
	NET I.B.R. OUTPUT (WATER) @ 100% (BTU/H)	NA
	TURNDOWN RATIO	20:1
DESIGN HOT WATER SUPPLY TEMPERATURE (°F)		180
DESIGN HOT WATER RETURN TEMPERATURE (°F)		160
SYSTEM DESIGN PRESSURE (PSI)		12
MAX ALLOWABLE OPERATING PRESSURE (PSIG)		30
FLUE OUTLET / AIR INTAKE SIZE (INCHES)		8 / 8
SUPPLY OUTLET SIZE (INCHES)		4
RETURN INLET SIZE (INCHES)		4
FUEL DATA	GAS CONNECTION, NPT (IN)	2
	GAS FIRING RATE (CFH)	2000
	INLET PRESSURE RANGE (IN. WC)	4.0 - 14
ELECTRICAL DATA	VOLTS/PH/HZ	120/1/60
	POWER, FLA	16
	OPERATING AMPS, MCA	-
OVERALL DIMENSIONS WITHOUT CONTROLS (L X W X H) (INCHES)		58 X 28 X 78
HOUSE KEEPING CONCRETE PAD DIMENSIONS (INCHES)		-
OPERATING WEIGHT (LBS)		1654
BASIS OF DESIGN	BOILER MANUFACTURER & MODEL NO.	AERCO
	BURNER MANUFACTURER & MODEL NO.	BENCHMARK 2000

REMARKS
1. PROVIDE OPERATIONS AND MAINTENANCE MANUALS, CONTRACTOR TO INSTALL UNIT PER MFGR'S IOM MANUAL.
2. SHIP BOILER PACKAGED AND SHOULD FIT THROUGH STANDARD 3 FOOT DOOR WIDTH.
3. VERIFY IN FIELD CONNECTION LOCATIONS AND CLEARANCES FOR BOILERS, REFER TO MANUFACTURER'S DOCUMENTS.
4. PROVIDE CONTROL PANEL.
5. NEW YORK STATE EDUCATION DEPARTMENT CONTROL COMPLIANCE, WIRING, AND OTHER EQUIPMENT AS NECESSARY TO SATISFY THE SEQUENCE OF OPERATION.
6. VENTLESS GAS TRAIN
7. BOILER SHALL UTILIZE NON-METALLIC VENT.
8. CONTROLLER SHALL DISPLAY AN ALERT WHEN O2 LEVEL IS ABOVE OR BELOW CRITICAL VALUES.
9. COMBUSTION O2 LEVELS SHALL NOTE EXCEED 7% THROUGHOUT ENTIRE FIRING RANGE.
10. BOILER MANUFACTURER TO PROVIDE AND CONTROL FIELD INSTALLED, MOTORIZED ISOLATION VALVES ON EACH BOILER.
11. PROVIDE BOILER SEQUENCING WITH HW RESET.
12. BOILER SHALL BE EQUIPPED WITH COMBUSTION AIR TEMPERATUER COMPENSATION TO AUTOMATICALLY COMPENSATE FOR AIR DENSITY CHANGES BY ADJUSTING OXYGEN AND OPTIMIZE THE COMBUSTION EFFICIENCY UNDER ALL SEASONAL TEMPERATURE CHANGES.
13. BOILER STAGING POINT NOT TO EXCEED 40%
14. BOILER MANUFACTURER TO PROVIDE 10 YEAR NON-PRORATED HEAT EXCHANGER WARRANTY.
15. BOILER MANUFACTURER TO PROVIDE 2 YEAR NON-PRORATED CONTROLLER WARRANTY.
16. BOILER MANUFACTURER TO PROVIDE LETTER OF GUARANTEE FOR AS BUILT FLUE AND COMBUSTION AIR INSTALLATION.
17. PROVIDE CONDENSATE NEUTRALIZER FOR EACH BOILER AND COMMON FLUE DRAINS.

EXPANSION TANK SCHEDULE

UNIT #	SERVICE	LOCATION	SYSTEM TEMP RANGE		INITIAL PRESS. IN TANK PSIG	MIN. VOLUME GAL	ACCEPT VOLUME GAL	PIPE SIZE TO TANK	WEIGHT (LBS)	BASIS OF DESIGN	
			MIN °F	MAX °F						MANUFACTURER	MODEL #
ET-1	HOT WATER	BOILER RM	140	190	12	50	34.56	1-1/2	651	BELL & GOSSETT	B-200

EXPANSION TANK SCHEDULE NOTES:
1. PROVIDE VERTICAL, ASME BLADDER EXPANSION TANK FULLY CHARGED TO MEET THE REQUIREMENTS OF THIS SCHEDULE.
2. PROVIDE SIGHT GLASS AND PROPER SUPPORTS FOR INSTALLATION ON CONCRETE PAD.
3. MAINTAIN REQUIRED SERVICE CLEARANCES AS DIRECTED BY MANUFACTURER.

AIR SEPARATOR SCHEDULE

UNIT #	SERVICE	LOCATION	TYPE	AIR SEPARATOR			OPERATING WEIGHT (LBS)	BASIS OF DESIGN	
				SIZE (IN)	FLOW (GPM)	PRESS. DROP (FT H20)		MANUFACTURER	MODEL #
AS-1	HOT WATER	MECHANICAL RM	COALESCING AIR & DIRT	8	480	0.3	1083	BELL & GOSSETT	CRS-8F

PIPE INSULATION SCHEDULE

FLUID	THICKNESS	OPERATING TEMP RANGE, °F
MAKE-UP WATER (ALL SIZES)	0.5"	40-60
HWS&R (LESS THAN 1-1/2")	1.5"	141-200
HWS&R (1-1/2" AND GREATER)	2.0"	141-200

CHEMICAL SHOT FEEDER SCHEDULE

UNIT #	SERVICE	LOCATION	TYPE	SIZE (GAL)	MAX. PRESS. (PSIG)	WEIGHT (LBS)	BASIS OF DESIGN	
							MANUFACTURER	MODEL #
CF-1	HOT WATER	BOILER RM	VERTICAL BY-PASS	5	300	38	NEPTUNE	DBF-5HP

PIPE SIZE SCHEDULE

PIPE SIZE	FLOW RANGE
3/4"	0-4 GPM
1"	5-7.5 GPM
1-1/4"	8-16 GPM
1-1/2"	17-24 GPM
2"	25-48 GPM
2-1/2"	49-77 GPM
3"	78-140 GPM
4"	141-280 GPM
5"	281-500 GPM
6"	501-800 GPM

MINIMUM PIPE SIZES SHALL BE PROVIDED AS SCHEDULED ABOVE. WHERE PIPE SIZES INDICATED ELSEWHERE WITHIN DRAWINGS CONFLICT WITH SCHEDULED FLOW, THE LARGER SIZE PIPE SHALL BE PROVIDED. MINIMUM PIPE SIZE 3/4".

DOMESTIC INDIRECT HOT WATER HEATER SCHEDULE

UNIT #	SERVICE	LOCATION	CAPACITY (GAL)	WATER TEMP RANGE		BASIS OF DESIGN	
				INLET °F	OUTLET °F	MANUFACTURER	MODEL #
IWH-1	HOT WATER	BOILER RM	200	40	140	AO SMTIH	HWGV200ASW660

INDIRECT WATER HEATER SCHEDULE NOTES:
1. PROVIDE 210 GALLON 2-PORT BUFFER TANK, ASME CODE SECTION VIIIM MAX PRESSURE 125 PSIG, MAX FLOW RATE 55 GPM.

No.	Date	Revisions
1	05/31/24	BIDDING DOCUMENTS

STATE OF NEW YORK · PETER CATAPANO · 054038 · LICENSED PROFESSIONAL ENGINEER

REG. EXP DATE: 10-31-26

Drawn by WM
Checked by PC
Project No. 44023
Scale AS SHOWN
Date 05/31/2024

Mechanical & Electrical Engineer: GREENMAN PEDERSEN, INC
2 EXECUTIVE BOULEVARD, SUITE 202, SUFFERN, NY 10901

Structural Engineer:

NORTH ROCKLAND HIGH SCHOOL EXTENSION BOILER REPLACEMENT

HIGH SCHOOL EXT SED# 05-02-01-06-0-007-016

65 Chapel Street, Garnerville, NY 10923

COUNTY OF ROCKLAND

MICHAEL SHILALE ARCHITECTS, L.L.P.
140 Park Avenue New City, NY 10956 Tel 845-708-9200
www.shilale.com

© COPYRIGHT, MICHAEL SHILALE ARCHITECTS, ALL RIGHTS RESERVED.

Drawing Title
MECHANICAL SCHEDULES

Drawing No.
M-002

SHEETMETAL LEGEND

SINGLE LINE	DOUBLE LINE					
	UP DN	SUPPLY DUCT (UP & DN)				
	UP DN	RETURN OR EXHAUST DUCT (UP & DN)				
12 x 10	12 x 10	RECTANGULAR DUCTWORK (WIDTH X DEPTH)				
						FLEXIBLE CONNECTOR. INSTALL AT ALL MOTOR DRIVEN EQUIPMENT
10"ø	10"ø	ROUND DUCTWORK (SIZE, DIAMETER)				FLEXIBLE DUCT (MAXIMUM LENGTH NOT TO EXCEED 36 INCHES)
		VANED ELBOW (PROVIDE ALL SQUARE OR RECTANGULAR ELBOWS WITH VANES)				TRANSITION WITH FLAT SIDE
	W R	RADIUS ELBOW (I.D. RADIUS IS DUCT WIDTH)				TRANSITION ON CENTER
		RADIUSED TEE WITH VOLUME DAMPERS (I.D. RADIUS IS DUCT WIDTH)				RECTANGULAR TO ROUND TRANSITION
		SQUARE THROATED TEE WITH TURNING VANES & VOLUME DAMPERS				BRANCH TAKE-OFF WITH VOLUME DAMPER
DN	DN	CHANGE IN ELEVATION (UP) (DN) IN DIRECTION OF AIR FLOW			R W R	RADIUS OFFSET (I.D. RADIUS IS DUCT WIDTH)
		VOLUME DAMPER (SINGLE OR OPPOSED BLADE) AS SPECIFIED				ROUND TAP TO RECTANGULAR DUCT (SPIN-IN-FITTING OR BELL MOUTH) & VOLUME DAMPER
AD	AD	ACCESS DOOR (BOTTOM SHOWN)		SD,FD,OR FD/SD	SD,FD,OR FD/SD	SMOKE DAMPER, FIRE DAMPER, OR SMOKE/FIRE DAMPER W/ACCESS DOOR
AD	AD	ACCESS DOOR (SIDE SHOWN)				SUPPLY DUCT WITH SPLITTER DAMPER AND SQUARE-THROAT ELBOW
		DUCTWORK TO BE REMOVED, INCLUDING ALL SUPPORTS AND HANGERS				SUPPLY DUCT WITH SPLITTER DAMPER AND RADIUS ELBOW (I.D. RADIUS IS DUCT WIDTH)

PIPING LEGEND

CWS	CHILLED WATER SUPPLY
CWR	CHILLED WATER RETURN
CWS	CONDENSER WATER SUPPLY TO TOWER
CWR	CONDENSER WATER RETURN FROM TOWER
CD	CONDENSATE DRAIN
HWS	HOT WATER SUPPLY
HWR	HOT WATER RETURN
MUW	MAKE UP WATER
GS	GLYCOL SUPPLY
GR	GLYCOL RETURN
ATV	ATMOSPHERIC VENT
	EXISTING TO REMAIN
	EXISTING TO BE REMOVED
	POINT OF CONNECTION
	POINT OF DISCONNECTION

SPECIALTY LEGEND

	AUTOMATIC AIR VENT
MV	MANUAL AIR VENT
	AIR SEPARATOR
	FLEXIBLE CONNECTOR
	VENTURI FLOWMETER
	FLOWLIMITING FITTING
	PRESSURE GAUGE W/NEEDLE VALVE
	THERMOMETER
	THERMOMETER WELL
FS	FLOW SWITCH
PS	PRESSURE SWITCH
	Y-LINE STRAINER
	Y-LINE STRAINER W/VALVE
T	THERMOSTAT (48" AFF) (ELECTRIC) (REFER TO SPECIFICATION)

FITTING LEGEND

	ELBOW TURNED UP
	ELBOW TURNED DOWN
	TEE TURNED UP
	TEE TURNED DOWN
	TEE (SIDE)
	RISE OR DROP IN PIPE
	UNION
	FLANGE
	PIPE CAP
	CLEANOUT W/ PLUG
	CONCENTRIC REDUCER
	ECCENTRIC REDUCER
UP	PIPE PITCH UP
DN	PIPE PITCH DOWN

VALVE LEGEND

	BALL VALVE
	BUTTERFLY VALVE
	GATE VALVE
	GLOBE VALVE
	CALIBRATED BALANCING VALVE
	PUMP TRIPLE DUTY VALVE
	LUBRICATED PLUG VALVE
	ANGLE VALVE
	CHECK VALVE
	RELIEF VALVE
	HOSE END DRAIN VALVE
	MODULATING TWO WAY VALVE
	MODULATING THREE WAY VALVE
	ELECTRIC MOTOR ACTUATOR
	SOLENOID ACTUATOR

ABBREVIATIONS

AD	ACCESS DOOR
AF	AIR FILTER
AFF	ABOVE FINISHED FLOOR
APD	AIR PRESSURE DROP
ARCH	ARCHITECTURAL
AV	AUTOMATIC AIR VENT
AMP	AMPERE
BHP	BRAKE HORSEPOWER
BOIL.	BOILER
BTUH	BRITISH THERMAL UNITS PER HOUR
CAI	COMBUSTION AIR INTAKE
CD	CONDENSATE DRAIN
CFM	CUBIC FEET PER MINUTE
CO	CLEAN OUT
CONT.	CONTINUED
CW	COLD WATER
DEG, °	DEGREES
dB	DECIBELS
DB	DRY BULB
DDC	DIRECT DIGITAL CONTROL
DIA, Ø	DIAMETER
DWG	DRAWING
EAT	ENTERING AIR TEMPERATURE
ET	EXPANSION TANK
EWT	ENTERING WATER TEMPERATURE
EX, EXIST.	EXISTING
FD	FIRE DAMPER
FD/SD	COMBINATION FIRE/SMOKE DAMPER
FL	FLOOR
FLA	FULL LOAD AMPS
FLD	FLOOR DRAIN
FOS	FUEL OIL SUPPLY
FOR	FUEL OIL RETURN
FPM	FEET PER MINUTE
FT	FEET
G	NATURAL GAS
GAL	GALLONS
GC	GENERAL CONTRACTOR
GPM	GALLONS PER MINUTE
GS	GLYCOL SUPPLY
GR	GLYCOL RETURN
HC	HEATING COIL
HE	HEAT EXCHANGER
HGT	HEIGHT
HP	HORSEPOWER
HWB	HOT WATER BOILER
HWS	HOT WATER SUPPLY
HWR	HOT WATER RETURN
HZ	HERTZ
IN	INCH
KW	KILOWATT
LAT	LEAVING AIR TEMPERATURE
LBS/HR	POUNDS PER HOUR
LF	LINEAR FOOT
LP	LOW PRESSURE
LWT	LEAVING WATER TEMPERATURE
LxWxH	LENGTH BY WIDTH BY HEIGHT
MAX	MAXIMUM
MBH	ONE THOUSAND BRITISH THERMAL UNITS PER HOUR
MCA	MINIMUM CIRCUIT AMPACITY
MD	MOTORIZED DAMPER
MIN	MINIMUM
NIC	NOT IN CONTRACT
NOM	NOMINAL
OA	OUTSIDE AIR
P	PUMP
PD	PRESSURE DROP
PRV	PRESSURE REDUCING VALVE
PSIG	POUNDS PER SQUARE INCH GAUGE
REQD	REQUIRED
RM	ROOM
RPM	REVOLUTIONS PER MINUTE
SG	SPECIFIC GRAVITY
SP	STATIC PRESSURE
SENS	SENSIBLE
SF	SQUARE FEET
SPEC	SPECIFICATION
SQ	SQUARE
SS	STAINLESS STEEL
TEMP	TEMPERATURE
THK	THICK
TYP	TYPICAL
UNO	UNLESS NOTED OTHERWISE
UTR	UP TO ROOF
V	VENT, VOLTS, OR VOLUME
VA	VENTILATION AIR
VAV	VARIABLE AIR VOLUME
VD	VOLUME DAMPER (MANUAL)
VIV	VARIABLE INLET VANE
VFD	VARIABLE FREQUENCY DRIVE
VIF	VERIFY IN FIELD
W	WATTS, WIDTH
WBT	WET BULB TEMPERATURE (°F)
WC	WATER COLUMN
WG	WATER GAUGE
WMS	WIRE MESH SCREEN
WPD	WATER PRESSURE DROP

DEMOLISH

A — A SECTION A-A

DETAIL NUMBER

DRAWING NUMBER WHERE DETAIL IS DRAWN — 1 H501

DETAIL INDICATION

SECTION NUMBER

DRAWING NUMBER WHERE SECTION IS DRAWN — A H001

DIRECTION OF VIEW

SECTION INDICATION

NOTE

NOT ALL ABBREVIATIONS AND SYMBOLS SHOWN MAY BE USED THROUGHOUT.

No.	Date	Revisions
1	05/31/24	BIDDING DOCUMENTS

STATE OF NEW YORK — PETER CATALANO — 054035 — LICENSED PROFESSIONAL ENGINEER

REG. EXP DATE: 10-31-26

Drawn by	WM
Checked by	PC
Project No.	44023
Scale	NONE
Date	05/31/2024

GREENMAN PEDERSEN, INC
2 EXECUTIVE BOULEVARD, SUITE 202, SUFFERN, NY 10901

Mechanical & Electrical Engineer:

Structural Engineer:

NORTH ROCKLAND HIGH SCHOOL EXTENSION BOILER REPLACEMENT

HIGH SCHOOL EXT SED# 05-02-01-06-0-007-016

85 Chapel Street, Haverstraw, NY 10923

COUNTY OF ROCKLAND

MICHAEL SHILALE ARCHITECTS, L.L.P.
140 Park Avenue New City, NY 10956 Tel 845-708-9200
www.shilale.com

© COPYRIGHT, MICHAEL SHILALE ARCHITECTS, ALL RIGHTS RESERVED.

Drawing Title
MECHANICAL SYMBOLS AND ABBREVIATIONS

Drawing No.
M-003

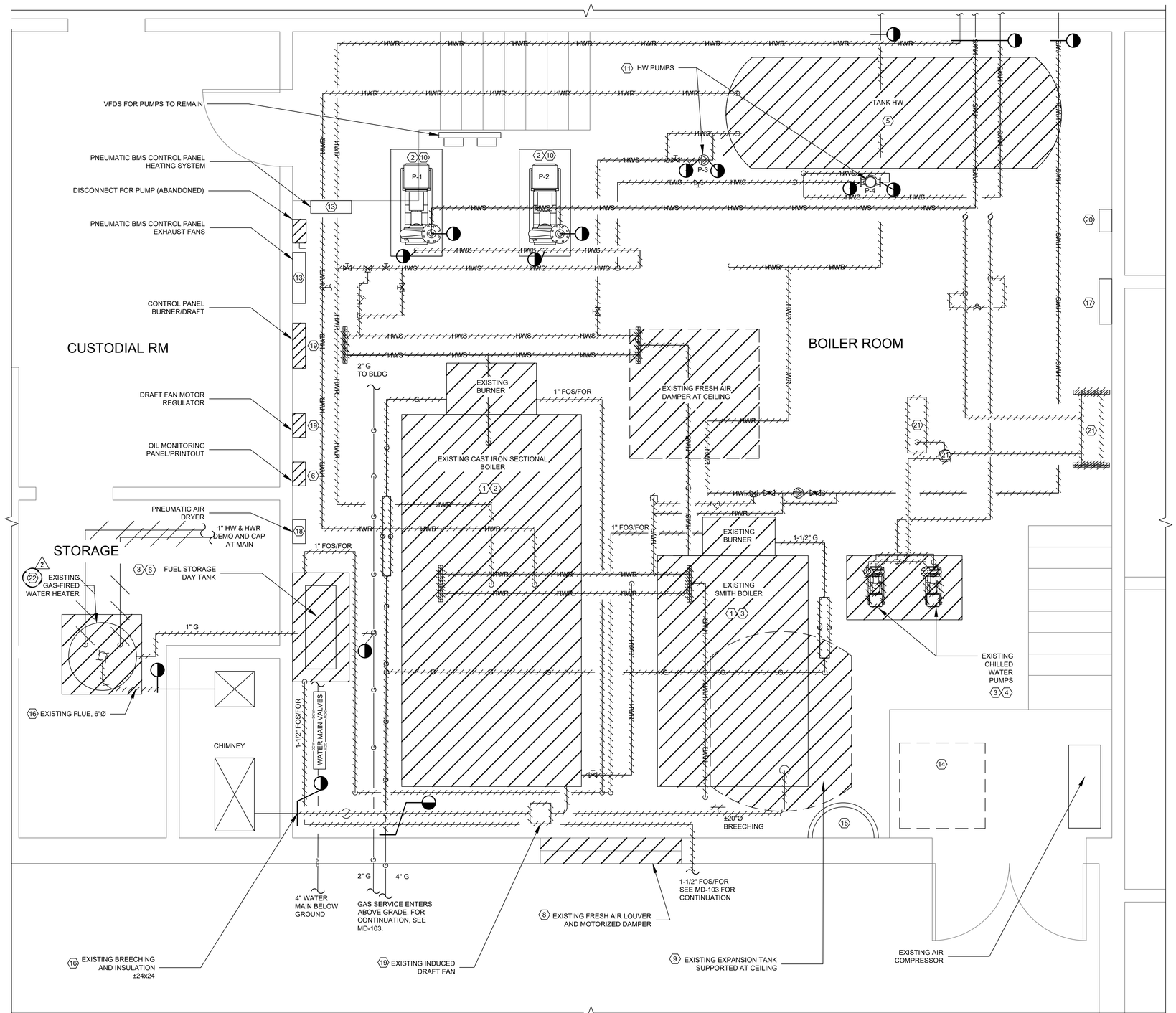

1 MECHANICAL BOILER RM PLAN - REMOVAL

SCALE: 1/2" = 1'- 0"

KEYED NOTES

1. DISCONNECT, REMOVE AND DISPOSE OF EXISTING HOT WATER BOILER, BURNER AND ASSOCIATED PIPING.
2. EXISTING HOUSEKEEPING PAD TO REMAIN.
3. REMOVE EXISTING HOUSEKEEPING PAD, REFER TO ARCHITECTURAL PLANS.
4. DISCONNECT, REMOVE AND DISPOSE OF ABANDONED CHILLED WATER PUMPS, ASSOCIATED INSULATED PIPING AND SUPPORTS.
5. DISCONNECT, REMOVE AND DISPOSE OF DOMESTIC HOT WATER TANK AND ASSOCIATED SUPPORTS.
6. DISCONNECT, REMOVE AND DISPOSE OF EXISTING OIL STORAGE DAY TANK, ASSOCIATED PIPING AND FUEL MONITORING SYSTEM.
7. DISCONNECT, REMOVE AND DISPOSE OF EXISTING UNDERGROUND FUEL OIL STORAGE TANK, ASSOCIATED WITH PIPING AND FUEL MONITORING SYSTEM.
8. DISCONNECT, REMOVE AND DISPOSE OF EXISTING FRESH AIR DAMPER AT CEILING AND WALL. EXISTING LOUVER AT WALL TO REMAIN.
9. DISCONNECT, REMOVE AND DISPOSE OF EXISTING CEILING SUSPENSION EXPANSION TANK, ASSOCIATED SUPPORTS AND PIPING.
10. EXISTING PAD MOUNTED HOT WATER PUMPS ARE TO REMAIN. REPLACE P-1 AND P-2 AS ALTERNATE. 2
11. DISCONNECT EXISTING HOT WATER CIRCULATING PUMP. EXISTING PUMP TO BE RE-UTILIZED. CONTRACTOR RESPONSIBLE TO PROTECT PUMP FOR REINSTALLATION.
12. DISCONNECT, REMOVE AND DISPOSE OF EXISTING HOT WATER STORAGE TANK AND ASSOCIATED SUPPORTS.
13. EXISTING PNEUMATIC BMS CONTROL PANEL TO REMAIN.
14. EXISTING SUMP PUMP AT FLOOR TO REMAIN.
15. EXISTING WALL MOUNTED SINK TO REMAIN.
16. DISCONNECT, REMOVE AND DISPOSE OF EXISTING BREECHING AND INSULATION, CAP AND SEAL AT CHIMNEY.
17. EXISTING SIEMENS BMS PANEL TO REMAIN.
18. EXISTING AIR DRYER FOR PNEUMATIC SYSTEM TO REMAIN.
19. DISCONNECT, REMOVE AND DISPOSE EXISTING DRAFT SYSTEM CONTROLS.
20. VFD FOR DOMESTIC HOT WATER PUMP TO REMAIN.
21. DISCONNECT, REMOVE AND DISPOSE OF EXISTING AIR SEPARATOR , EXPANSION TANK AND HEADER FOR CHILLED WATER SYSTEM. REMOVE ALL ASSOCIATED SUPPORTS.
22. REMOVE EXISTING WATER HEATER. REMOVE GAS LINE BACK TO MAIN. 2

0 1/2 1
IF THIS BAR DOES NOT MEASURE 1", THEN DRAWING IS NOT TO FULL SCALE

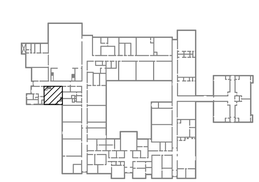

KEY PLAN

PLAN NORTH

No.	Date	Revisions
2	06/18/24	REVISIONS
1	05/31/24	BIDDING DOCUMENTS

STATE OF NEW YORK · PETER CATANZARO · LICENSED PROFESSIONAL ENGINEER · 094099

REG. EXP DATE: 10-31-26

Drawn by	WM
Checked by	PC
Project No.	44023
Scale	AS SHOWN
Date	05/31/2024

GREENMAN PEDERSEN, INC
2 EXECUTIVE BOULEVARD, SUITE 202, SUFFERN, NY 10901

Mechanical & Electrical Engineer:

Structural Engineer:

NORTH ROCKLAND HIGH SCHOOL EXTENSION BOILER REPLACEMENT

HIGH SCHOOL EXT SED# 05-02-01-06-0-007-016

65 Chapel Street, Haverstraw, NY 10923

COUNTY OF ROCKLAND

MICHAEL SHILALE ARCHITECTS, L.L.P.
140 Park Avenue New City, NY 10956 Tel 845-708-8200
www.shilale.com

© COPYRIGHT, MICHAEL SHILALE ARCHITECTS, ALL RIGHTS RESERVED.

Drawing Title
MECHANICAL BOILER ROOM PLAN - REMOVAL

Drawing No.
MD-101

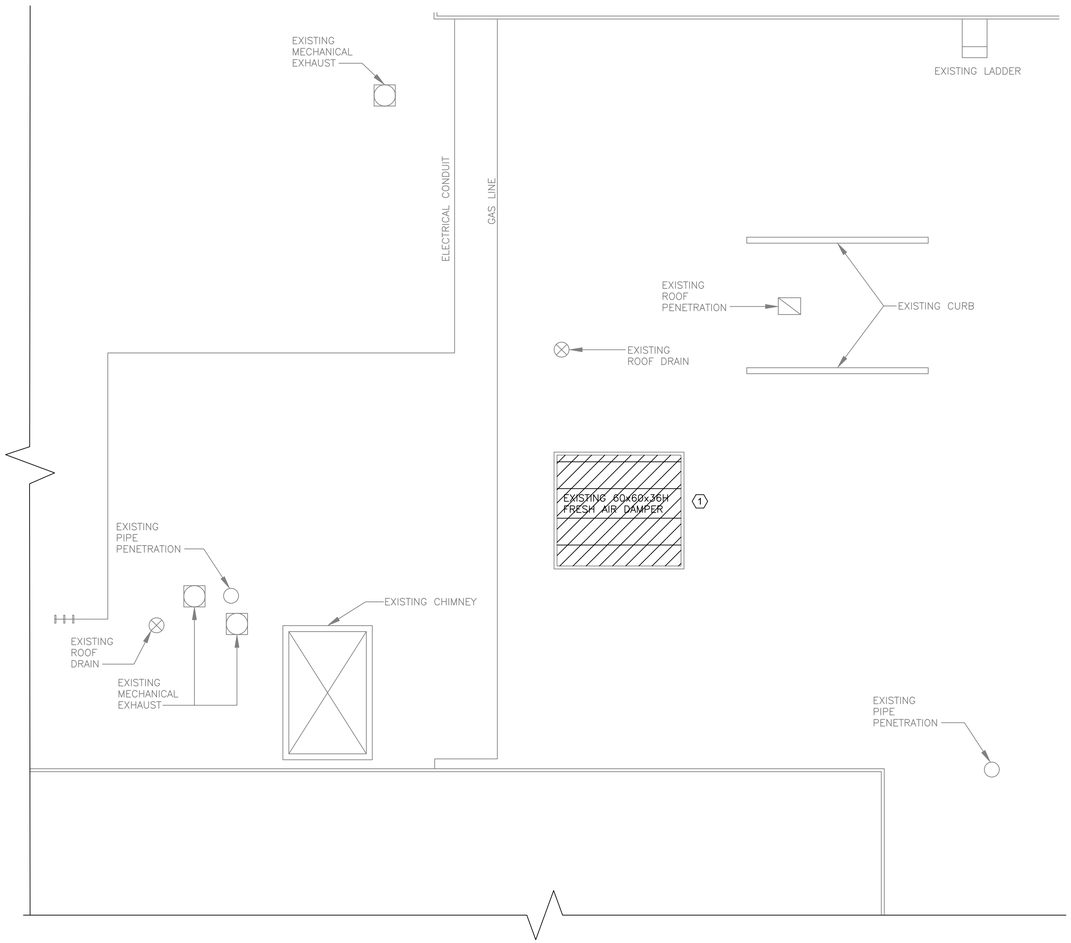

1 ROOF PLAN REMOVAL

SCALE: 1/4" = 1'- 0"

KEYED NOTES

1. DISCONNECT AND REMOVE AIR HOOD. EXISTING CURB TO REMAIN. COORDINATE REMOVALS WITH ARCHITECT.

KEY PLAN

PLAN NORTH

0 1/2 1
IF THIS BAR DOES NOT MEASURE 1", THEN DRAWING IS NOT TO FULL SCALE

No.	Date	Revisions
1	05/31/24	BIDDING DOCUMENTS

STATE OF NEW YORK · PETER CATANZARO · 054035 · LICENSED PROFESSIONAL ENGINEER
REG. EXP DATE: 10-31-26

Drawn by	WM
Checked by	PC
Project No.	44023
Scale	AS SHOWN
Date	05/31/2024

Mechanical & Electrical Engineer: GREENMAN PEDERSEN, INC
2 EXECUTIVE BOULEVARD, SUITE 202, SUFFERN, NY 10901

Structural Engineer:

NORTH ROCKLAND HIGH SCHOOL EXTENSION BOILER REPLACEMENT

HIGH SCHOOL EXT SED# 05-02-01-06-0-007-016

66 Chapel Street, Stony Point, NY 10983

COUNTY OF ROCKLAND

MICHAEL SHILALE ARCHITECTS, L.L.P.
140 Park Avenue New City, NY 10956 Tel 845-708-9200
www.shilale.com

© COPYRIGHT, MICHAEL SHILALE ARCHITECTS, ALL RIGHTS RESERVED.

Drawing Title
MECHANICAL ROOF PLAN REMOVAL

Drawing No.
MD-102

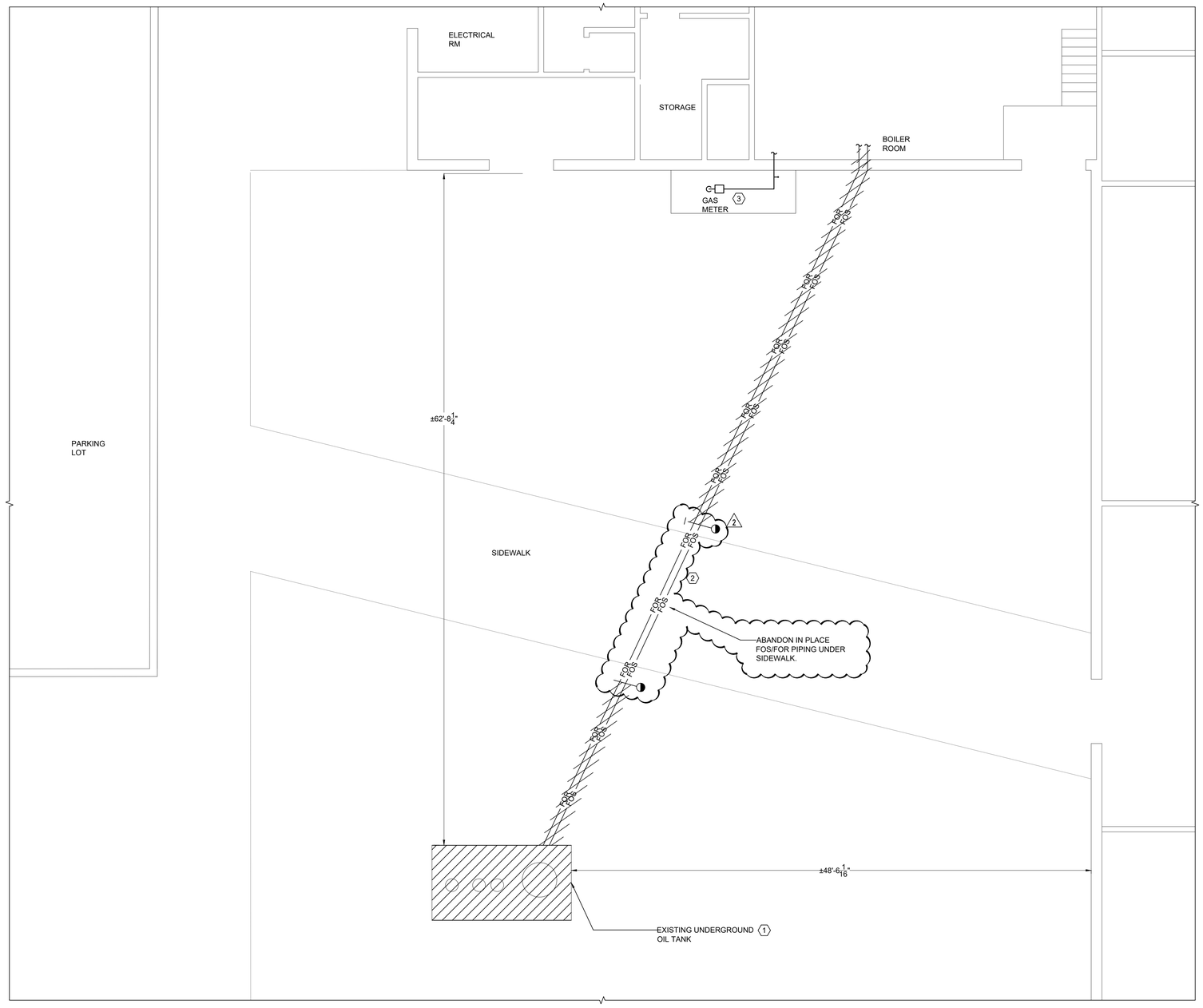

1 MECHANICAL PARTIAL SITE PLAN - REMOVAL

SCALE: 3/32" = 1'- 0"

KEYED NOTES:

1. DISCONNECT AND REMOVE UNDERGROUND FUEL OIL TANK AND ASSOCIATED FILL/VENT PIPING, MANHOLES, ETC. CONTRACTOR TO COORDINATE REMOVAL WITH FACILITIES AND ASSOCIATED UTILITY PROVIDER. SEE GENERAL NOTES ON THIS DRAWING FOR MORE INFO.
2. DISCONNECT AND REMOVE BURIED FUEL OIL SUPPLY AND RETURN PIPING FROM UNDERGROUND FUEL STORAGE TANK TO BOILER ROOM DAY TANK. COORDINATE REMOVAL WITH FACILITIES. SEE GENERAL NOTES ON THIS DRAWING FOR MORE INFO.
3. EXISTING UTILITY GAS METER AND PIPING TO REMAIN.

GENERAL NOTES:

1. PRIOR TO REMOVAL OF FUEL OIL TANK AND FUEL OIL PIPING, CONTRACTOR TO EMPTY TANK FROM ITS CONTENTS AND PROPERLY DISPOSE PER EPA REGULATIONS.
2. CONTRACTOR TO PERFORM TEST OF THE EXCAVATED SOIL FOR ANY CONTAMINATES. UPON COMPLETION OF THE REMOVAL WORK, CONTRACTOR TO BACKFILL EXCAVATED AREA WITH CLEAN FILL.
3. COORDINATE ALL EXCAVATION AND FILL REQUIREMENTS WITH ARCHITECT AND GENERAL CONTRACTOR.

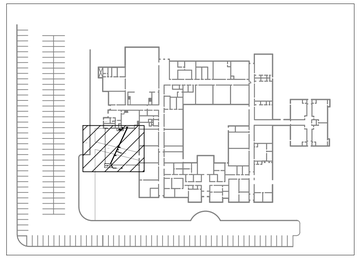

KEY PLAN

PLAN NORTH

0 1/2 1
IF THIS BAR DOES NOT MEASURE 1", THEN DRAWING IS NOT TO FULL SCALE

No.	Date	Revisions
2	06/18/24	REVISIONS
1	05/31/24	BIDDING DOCUMENTS

STATE OF NEW YORK · PETER CATANZARO · 094099 · LICENSED PROFESSIONAL ENGINEER

REG. EXP. DATE: 10-31-26

Drawn by WM
Checked by PC
Project No. 44023
Scale AS SHOWN
Date 05/31/2024

GREENMAN PEDERSEN, INC
2 EXECUTIVE BOULEVARD, SUITE 202, SUFFERN, NY 10901

Mechanical & Electrical Engineer:

Structural Engineer:

NORTH ROCKLAND HIGH SCHOOL EXTENSION BOILER REPLACEMENT

HIGH SCHOOL EXT SED# 05-02-01-06-0-007-016

65 Chapel Street
Lawrence, NY 11559

COUNTY OF ROCKLAND

MICHAEL SHILALE ARCHITECTS, L.L.P.
140 Park Avenue New City, NY 10956 Tel 845-708-9200
www.shilale.com

© COPYRIGHT, MICHAEL SHILALE ARCHITECTS, ALL RIGHTS RESERVED.

Drawing Title
MECHANICAL PARTIAL SITE PLAN - REMOVAL

Drawing No.
MD-103

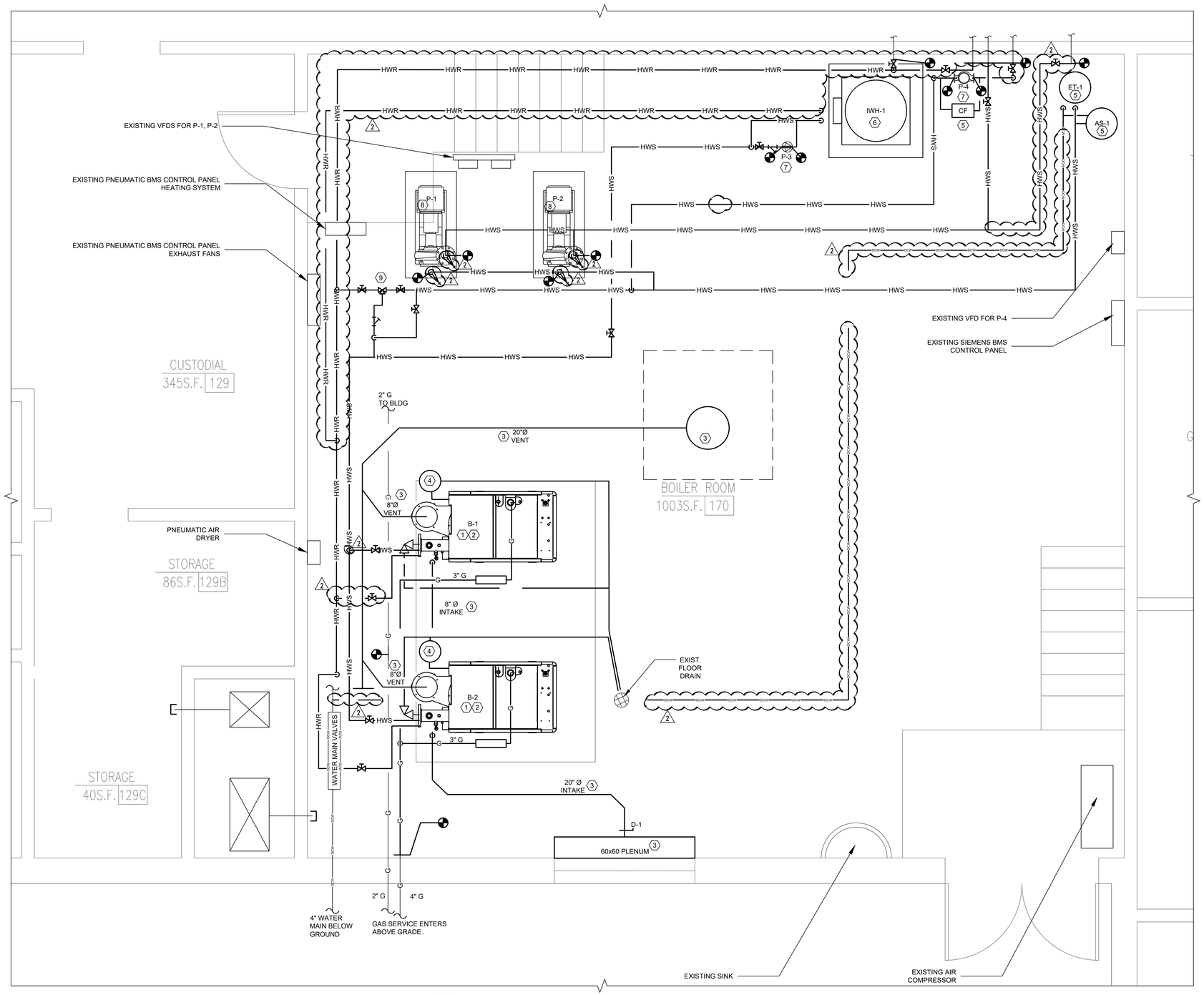

1 MECHANICAL BOILER ROOM PLAN - NEW WORK

SCALE: 1/2" = 1'- 0"

KEYED NOTES:

1. PROVIDE HOT WATER CONDENSING BOILER, SEE EQUIPMENT SCHEDULE ON DRAWING M002 AND MECHANICAL DETAILS. PROVIDE NEW DDC CONTROLS AND INTERCONNECT TO EXISTING SIEMENS BMS SYSTEM. SEE DRAWING M401 AND SPECIFICATIONS.
2. PROVIDE PIPING AND REQUIRED INSULATION AND SUPPORTS FOR BOILER. MAKE ALL REQUIRED CONNECTIONS AS PER MANUFACTURER'S INSTRUCTIONS AND AS PER MECHANICAL DETAILS. FOR PIPE INSULATION, SEE SPECIFICATIONS AND SCHEDULE ON DRAWING M002.
3. FURNISH AND INSTALL EXHAUST FLUE AND COMBUSTION AIR INTAKE VENT AND SUPPORTS. SEE DETAILS ON M503 AND FOLLOW MANUFACTURER'S INSTALLATION INSTRUCTIONS.
4. FURNISH AND INSTALL CONDENSATE NEUTRALIZER FOR THE CONDENSING BOILERS, SEE DETAIL ON M503.
5. FURNISH AND INSTALL ALL ASSOCIATED BOILER APPURTENANCES, AIR SEPARATOR, EXPANSION TANK, CHEMICAL SHOT FEEDER, ETC. SEE EQUIPMENT SCHEDULE ON M002. REFER TO MECHANICAL DETAILS FOR ADDITIONAL INFORMATION.
6. FURNISH AND INSTALL INDIRECT HOT WATER HEATER, SEE EQUIPMENT SCHEDULE ON M002. PROVIDE NEW PIPING, INSULATION AND SUPPORTS AND MAKE CONNECTION TO EXISTING MIXING VALVE AT DOMESTIC HOT WATER SYSTEM.
7. REINSTALL EXISTING PUMPS, P-3 AND P-4. PROVIDE NEW SUPPORTS. MAKE ALL CONNECTIONS TO EXISTING PIPING.
8. BASE BID: EXISTING PUMPS TO REMAIN.
   ALTERNATE #1: FURNISH AND INSTALL PUMPS, P-1, P-2. SEE WATER PUMP SCHEDULE ON DRAWING M-002 AND MECHANICAL DETAILS.
9. PROVIDE 3-WAY CONTROL VALVE. MAKE: SIEMENS ; MODEL: 294-06162 (2)

GENERAL NOTES:

1. SEE PIPING DIAGRAM AND DETAILS FOR ALL VALVING, FITTINGS AND SIZES.

0 1/2 1
IF THIS BAR DOES NOT MEASURE 1", THEN DRAWING IS NOT TO FULL SCALE

No.	Date	Revisions
2	06/18/24	REVISIONS
1	05/31/24	BIDDING DOCUMENTS

STATE OF NEW YORK · PETER CATANZARO · 094039 · LICENSED PROFESSIONAL ENGINEER
REG. EXP DATE: 10-31-26

Drawn by WM
Checked by PC
Project No. 44023
Scale AS SHOWN
Date 05/31/2024

Mechanical & Electrical Engineer: GREENMAN, PEDERSEN, INC
2 EXECUTIVE BOULEVARD, SUITE 202, SUFFERN, NY 10901

Structural Engineer:

NORTH ROCKLAND HIGH SCHOOL EXTENSION BOILER REPLACEMENT
HIGH SCHOOL EXT SED# 05-02-01-06-0-007-016
COUNTY OF ROCKLAND
65 Chapel Street, Garnerville, NY 10923

MICHAEL SHILALE ARCHITECTS, L.L.P.
140 Park Avenue New City, NY 10956 Tel 845-709-8020
www.shilale.com

KEY PLAN

PLAN NORTH

© COPYRIGHT, MICHAEL SHILALE ARCHITECTS, ALL RIGHTS RESERVED.

Drawing Title
MECHANICAL BOILER ROOM PLAN - INSTALL

Drawing No.
M-101

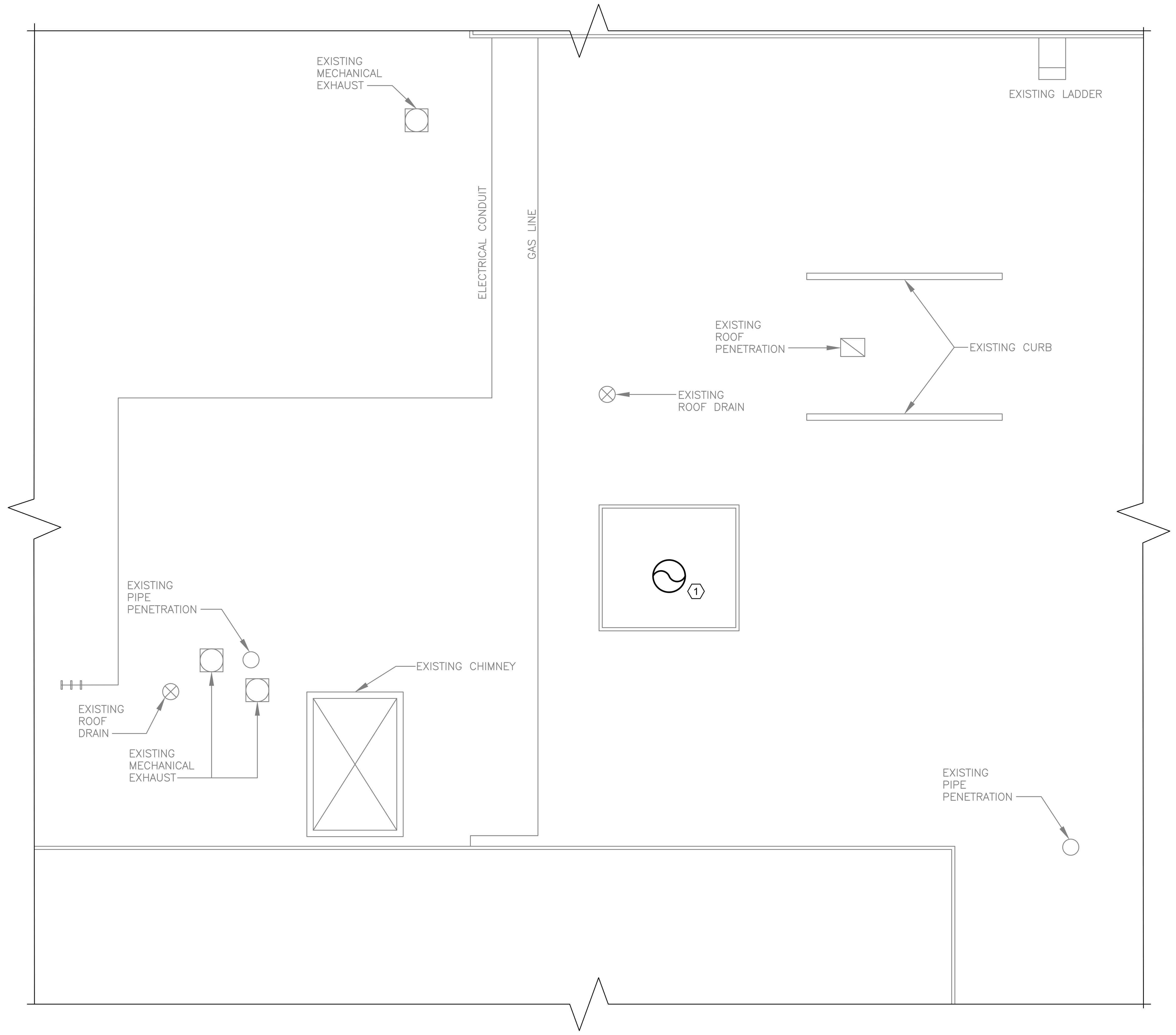

1 PARTIAL ROOF PLAN - NEW WORK

SCALE: 1/4" = 1'- 0"

KEYED NOTES

1. FURNISH AND INSTALL NEW VENT THROUGH EXISTING ROOF OPENING, SEE DETAIL 1/M503 AND REFER TO MANUFACTURER'S INSTALLATION MANUALS. CONTRACTOR TO PROPERLY SEAL PENETRATION, COORDINATE WITH GC AND REFER TO ARCHITECTURAL PLANS FOR ADDITIONAL DETAILS.

KEY PLAN

PLAN NORTH

0 1/2 1

IF THIS BAR DOES NOT MEASURE 1" THEN DRAWING IS NOT TO FULL SCALE

No.	Date	Revisions
1	05/31/24	BIDDING DOCUMENTS

REG. EXP DATE: 10-31-26

Drawn by	WM
Checked by	PC
Project No.	44023
Scale	AS SHOWN
Date	05/31/2024

Mechanical & Electrical Engineer: GREENMAN PEDERSEN, INC

Structural Engineer:

NORTH ROCKLAND HIGH SCHOOL EXTENSION BOILER REPLACEMENT

HIGH SCHOOL EXT SED# 05-02-01-06-0-007-016

COUNTY OF ROCKLAND

MICHAEL SHILALE ARCHITECTS, L.L.P.

© COPYRIGHT, MICHAEL SHILALE ARCHITECTS, ALL RIGHTS RESERVED.

Drawing Title: MECHANICAL ROOF PLAN - INSTALL

Drawing No. M-102

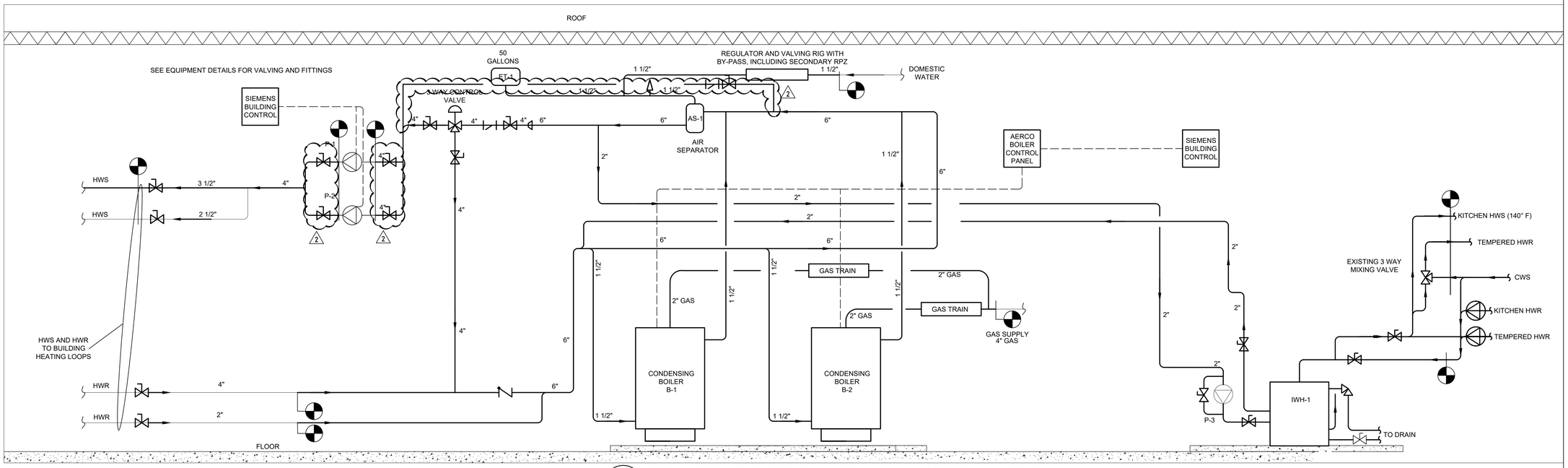

2 BOILER RISER DIAGRAM - INSTALLATION

SCALE: NONE

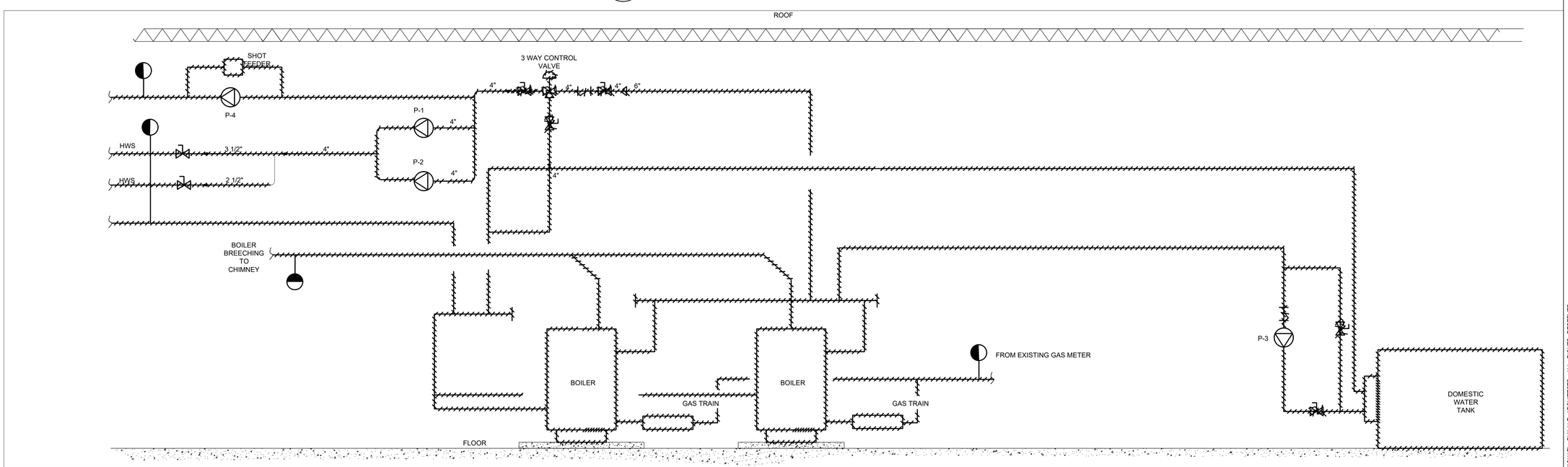

1 BOILER RISER DIAGRAM - DEMOLITION

SCALE: NONE

No.	Date	Revisions
2	06/18/24	REVISIONS
1	05/31/24	BIDDING DOCUMENTS

STATE OF NEW YORK · PETER CATANZARO · 094039 · LICENSED PROFESSIONAL ENGINEER

REG. EXP DATE: 10-31-26

Drawn by	WM
Checked by	PC
Project No.	44023
Scale	AS SHOWN
Date	05/31/2024

GREENMAN PEDERSEN, INC
2 EXECUTIVE BOULEVARD, SUITE 202, SUFFERN, NY 10901

Mechanical & Electrical Engineer:

Structural Engineer:

NORTH ROCKLAND HIGH SCHOOL EXTENSION BOILER REPLACEMENT

HIGH SCHOOL EXT SED# 05-02-01-06-0-007-016

65 Chapel Street, Haverstraw, NY 10927

COUNTY OF ROCKLAND

MICHAEL SHILALE ARCHITECTS, L.L.P.
140 Park Avenue New City, NY 10956 Tel 845-708-9200
www.shilale.com

© COPYRIGHT, MICHAEL SHILALE ARCHITECTS, ALL RIGHTS RESERVED.

Drawing Title
MECHANICAL PIPING DIAGRAM

Drawing No.
M-301

SEQUENCE OF OPERATIONS:

REFER TO SPECIFICATION SECTION 230993 FOR SEQUENCE OF OPERATION AND CONTROL OF MECHANICAL EQUIPMENT LISTED AND SHOWN ON DRAWING M003. REFER TO MECHANICAL EQUIPMENT SPECIFICATIONS FOR ADDITIONAL INFORMATION.

A. GENERAL:

1. THE OCCUPANCY MODE (UNOCCUPIED OR OCCUPIED) SHALL BE DETERMINED THROUGH A USER-DEFINABLE TIME SCHEDULE. SUMMERTIME MODE SHALL INCLUDE TIMES DURING WHICH HEATING IS NOT REQUIRED. WINTERTIME MODE SHALL INCLUDE TIMES DURING WHICH HEATING IS REQUIRED.
2. BOILER B-1 SHALL BE THE PRIMARY LEAD BOILER. BOILER B-2 SHALL BE THE LAG BOILER, SEE LEAD-LAG PROGRAMMING CONTROLS BELOW.
3. BOILER B-2 SHALL RUN WHEN MAINTENANCE IS REQUIRED ON BOILER B-1.
4. NEW BREAK GLASS STATION AT EACH BOILER ROOM DOORWAY SHALL SHUT DOWN BOTH BOILER PRIMARY CONTROL CIRCUITS AND CLOSE MAIN FUEL VALVES.

B. WINTERTIME OCCUPIED MODE:

HEATING MODE SHALL BE INITIATED WHEN OUTSIDE TEMPERATURE FALLS BELOW 55°F, (ADJUSTABLE). THE HOT WATER BOILER SHALL BE ENGAGED AND MAINTAIN AT LEAST MINIMUM HOT WATER TEMPERATURE REQUIRED BY THE BOILER.

1. BOILER B-1: B-1 SHALL MODULATE TO MAINTAIN HOT WATER SUPPLY TEMPERATURE SETPOINT OF 180°F (ADJ.).
   a. PUMP P-1/2: P-1/2 SHALL BE ENERGIZED AND SHALL OPERATE AT A CONSTANT SPEED WHENEVER B-1 IS ENERGIZED (HARDWIRED TO BOILER CONTROLLER). B-1 SHALL NOT OPERATE UNLESS P-1/2 IS RUNNING. P-1/2 FLOW RATE SHALL BE IN ACCORDANCE WITH BOILER MANUFACTURER'S PUMPING REQUIREMENTS.
   b. B-1 BURNERS SHALL FULLY MODULATE AS FACTORY BURNER SET PROGRAMMING.
   c. LOW RETURN TEMPERATURE: WHENEVER THE HOT WATER RETURN TEMPERATURE FALLS BELOW 140°F (ADJ.) AND B-1 IS ENERGIZED, AN ALARM SHALL GENERATE.
2. BOILER B-2: B-2 SHALL MODULATE TO MAINTAIN HOT WATER SUPPLY TEMPERATURE SETPOINT OF 180°F (ADJ.).
   a. PUMP P-1/2: P-1/2 SHALL BE ENERGIZED AND SHALL OPERATE AT A CONSTANT SPEED WHENEVER B-1 IS ENERGIZED (HARDWIRED TO BOILER CONTROLLER). B-1 SHALL NOT OPERATE UNLESS P-1/2 IS RUNNING. P-1/2 FLOW RATE SHALL BE IN ACCORDANCE WITH BOILER MANUFACTURER'S PUMPING REQUIREMENTS.
   b. B-2 BURNERS SHALL FULLY MODULATE AS FACTORY BURNER SET PROGRAMMING.
   c. LOW RETURN TEMPERATURE: WHENEVER THE HOT WATER RETURN TEMPERATURE FALLS BELOW 140°F (ADJ.) AND B-2 IS ENERGIZED, AN ALARM SHALL GENERATE.
3. SECONDARY PUMPS:
   a. PUMPS P-3/4: P-3/4 SHALL OPERATE AT VARIABLE SPEED TO MAINTAIN ZONE HOT WATER SUPPLY TEMPERATURE AT A SETPOINT (BASED ON OUTSIDE AIR TEMPERATURE RESET)
   b. THE DDC SYSTEM USES CURRENT SWITCHES TO CONFIRM THE LEAD PUMP IS IN THE DESIRED STATE (I.E. ON OR OFF) AND GENERATES AN ALARM IF STATUS DEVIATES FROM DDC START/STOP CONTROL. IF THE LEAD PUMP GOES INTO ALARM, THE LAG PUMP STARTS.
4. OUTSIDE AIR TEMPERATURE RESET:
   a. NATURAL GAS MODE (BOILERS B-1, B-2): BOILERS SHALL MODULATE TO MAINTAIN HOT WATER SETPOINT ACCORDING TO THE MANUFACTURER'S SUGGESTED PROTOCOL. HOT WATER SUPPLY TEMPERATURE MAY BE RESET TO 140 DEG F (ADJ.)
   b. OUTSIDE AIR RESET MODE SHALL BE CANCELED IF THE PRIMARY HOT WATER RETURN TEMPERATURE DROPS TO 140 DEG F. (ADJ.) WHENEVER BOILERS ARE ENERGIZED. THERE IS NO HOT WATER RETURN LOW LIMIT FOR B-2.
5. LEAD LAG PROGRAMMING CONTROL:
   A LEAD-LAG PROGRAMMING CONTROL SHALL SEQUENCE AUTOMATICALLY THE FIRING OF MULTIPLE BOILERS WITH CHANGING LOAD CONDITIONS. THE FIRST (LEAD) BOILER STARTS-UP AND REACHES ITS BURNER DELIVERY (HIGH FIRE) RATE. IF THE FIRST BOILER IS UNABLE TO MEET THE REQUIRED WATER TEMPERATURE, THE SECOND (LAG) BOILER SHALL AUTOMATICALLY FIRE. BOILERS SHALL OPERATE IN UNISON, MODULATING TO MEET THE DEMAND. IF THE DEMAND IS LESS THAN THE CAPACITY PROVIDED BY BOTH BOILERS FIRING AT LOW FIRE, THE LAG BOILER SHALL AUTOMATICALLY SHUT DOWN. THE LEAD BOILER SHALL SHUT DOWN WHEN THE DEMAND HAS BEEN EXCEEDED. SELECTION OF THE LEAD BOILER SHALL BE MADE EITHER MANUALLY BY MEANS OF A SELECTOR DIAL ON THE CONTROL CABINET OR AUTOMATICALLY AS A FUNCTION OF RUN TIME.
6. BURNER OPERATING CONTROLS:
   TO MAINTAIN SAFE OPERATING CONDITIONS, THE FOLLOWING BURNER SAFETY CONTROLS LIMIT BURNER OPERATION.
   a. HIGH TEMPERATURE LIMIT: AUTOMATIC AND MANUAL RESET STOPS BURNER IF OPERATING CONDITIONS RISE ABOVE MAXIMUM BOILER DESIGN TEMPERATURE. LIMIT SWITCH TO BE MANUALLY RESET ON THE CONTROL INTERFACE.
   b. LOW-WATER CUTOFF SWITCH: ELECTRONIC PROBE SHALL PREVENT BURNER OPERATION ON LOW WATER. CUTOFF SWITCH SHALL BE MANUALLY RESET ON THE CONTROL INTERFACE.
   c. BLOCKED INLET SAFETY SWITCH: MANUAL-RESET PRESSURE SWITCH FIELD MOUNTED ON BOILER COMBUSTION-AIR INLET.
   d. HIGH AND LOW GAS PRESSURE SWITCHES: PRESSURE SWITCHES SHALL PREVENT BURNER OPERATION ON LOW OR HIGH GAS PRESSURE. PRESSURE SWITCHES TO BE MANUALLY RESET ON THE CONTROL INTERFACE.
   e. BLOCKED DRAIN SWITCH: BLOCKED DRAIN SWITCH SHALL PREVENT BURNER OPERATION WHEN TRIPPED. SWITCH TO BE MANUALLY RESET ON THE CONTROL INTERFACE.
   f. LOW AIR PRESSURE SWITCH: PRESSURE SWITCHES SHALL PREVENT BURNER OPERATION ON LOW AIR PRESSURE. SWITCH TO BE MANUALLY RESET ON THE CONTROL INTERFACE.
   g. AUDIBLE ALARM: FACTORY MOUNTED ON CONTROL PANEL WITH SILENCE SWITCH; SHALL SOUND ALARM FOR ANY LOCKOUT CONDITIONS.
   h. EACH BURNER SHALL BE PROVIDED WITH A FLAME FAILURE (COMBUSTION SAFETY) PROGRAMMING CONTROL WHICH SHALL DE-ENERGIZE ALL ELECTRICALLY OPERATED FUEL VALVES AND BURNER EQUIPMENT WITHIN FOUR SECONDS, AND ACTUATE A VISUAL ALARM MOUNTED ON THE CONTROL PANEL AFTER AN OPERATING FLAME FAILURE HAS OCCURRED. AUTOMATIC START UP AND SHUTDOWN PROGRAMMING SHALL BE A PART OF THIS SAFETY EQUIPMENT.
   i. CARBON MONOXIDE SHUT DOWN: BURNER EQUIPMENT SHALL BE SHUT DOWN BY THE STAND ALONE CO SYSTEM ON DETECTION OF HIGH CARBON MONOXIDE LEVELS.
   j. LOW FIRE HOLD AQUASTAT: A LOW FIRE HOLD MINIMUM TEMPERATURE AQUASTAT SHALL LIMIT BURNER MODULATION TO PREVENT BOILER FROM MODULATING TO HIGH FIRE UNTIL WATER TEMPERATURE REACHES 180°F.

C. WINTERTIME UNOCCUPIED MODE: THE BOILER SHALL MODULATE ACCORDING TO THE SAME SEQUENCE ABOVE. THE TEMPERATURE CONTROL SYSTEM SHALL BE CAPABLE OF NIGHT SETBACK.

D. SUMMERTIME MODE: BOILERS B-1 AND B-2 SHALL BE SET TO MAINTAIN DOMESTIC HOW WATER HEATING REQUIREMENTS. THE SUMMER SWING VALVE SWITCH SHALL BE SET TO OFF. PRIMARY LOOP PUMPS SHALL BE OFF. SECONDARY LOOP PUMPS SHALL BE ON.

CONTROLS SYMBOLS

TT	TEMPERATURE TRANSMITTER	VFD	VARIABLE FREQUENCY DRIVE
PT	PRESSURE TRANSMITTER		MOTOR STARTER
CS	CURRENT TRANSMITTER	DPS	DIFFERENTIAL PRESSURE SENSOR
HS	HAND SWITCH (HAND-OFF-AUTO SWITCH)	SPD	SPEED COMMAND
ZC	VALVE OR DAMPER POSITION CONTROLLER	AIA	ANALOG INPUT
ES	DAMPER END SWITCH	COMM	COMMUNICATION
		ADJ	ADJUSTABLE
		EVA	ELECTRIC VALVE ACTUATOR

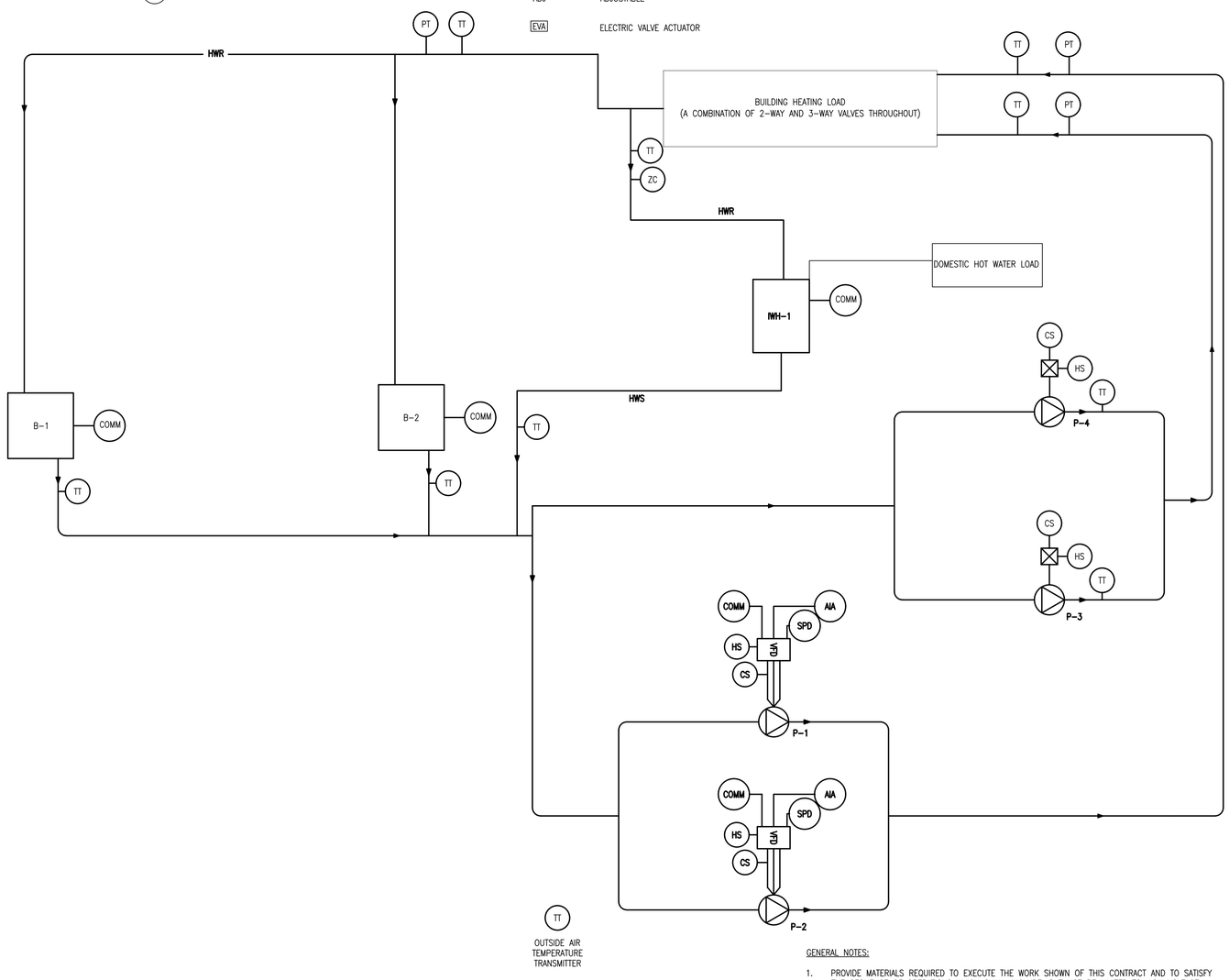

GENERAL NOTES:

1. PROVIDE MATERIALS REQUIRED TO EXECUTE THE WORK SHOWN OF THIS CONTRACT AND TO SATISFY THE SEQUENCE OF OPERATIONS WHICH SHALL INCLUDE, BUT NOT BE LIMITED TO: LOW VOLTAGE WIRING, CONDUIT, MATERIALS, PROGRAMMING, SOFTWARE, HARDWARE, AND APPURTENANCES.
2. PROVIDE LOW VOLTAGE WIRING IN EMT CONDUIT THROUGHOUT. PAINT TO MATCH EXISTING FINISHES.
3. SCHEDULE THE WORK WITH THE OWNER AND NOTIFY THE OWNER AT LEAST 48 HOURS IN ADVANCE OF PERFORMING ANY SHUTDOWNS.
4. PERFORM CUTTING AND PATCHING AS REQUIRED TO ACCESS THE EXISTING VENT DAMPERS OR TO OTHERWISE EXECUTE THE WORK. RESTORE FINISHES TO MATCH EXISTING TO THE SATISFACTION OF THE OWNER.

1 CONTROL SYSTEM SCHEMATIC DIAGRAM

SCALE: N.T.S.

No.	Date	Revisions
1	05/31/24	BIDDING DOCUMENTS

STATE OF NEW YORK · PETER CATANZARO · 054035 · LICENSED PROFESSIONAL ENGINEER

REG. EXP DATE: 10-31-26

Drawn by	WM
Checked by	PC
Project No.	44023
Scale	AS SHOWN
Date	05/31/2024

GREENMAN, PEDERSEN, INC
2 EXECUTIVE BOULEVARD, SUITE 202, SUFFERN, NY 10901

Mechanical & Electrical Engineer:

Structural Engineer:

NORTH ROCKLAND HIGH SCHOOL EXTENSION BOILER REPLACEMENT

HIGH SCHOOL EXT SED# 05-02-01-06-0-007-016

86 Chapel Street, Garnerville, NY 10923

COUNTY OF ROCKLAND

MICHAEL SHILALE ARCHITECTS, L.L.P.
140 Park Avenue New City, NY 10956 Tel 845-708-9200
www.shilale.com

© COPYRIGHT, MICHAEL SHILALE ARCHITECTS, ALL RIGHTS RESERVED.

Drawing Title
MECHANICAL CONTROL DIAGRAM

Drawing No.
M-401

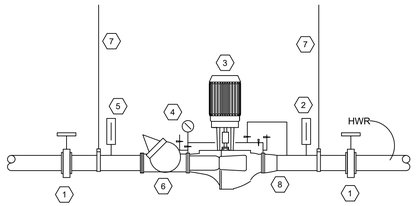

1. BUTTERFLY VALVE
2. THERMOMETER
3. VERTICAL INLINE PUMP
4. PRESSURE GAUGE
5. THERMOMETER
6. PUMP TRIPLE DUTY VALVE
7. PIPE HANGER
8. PIPE REDUCER (AS NEEDED)

1 INLINE PUMP DETAIL
SCALE: NTS

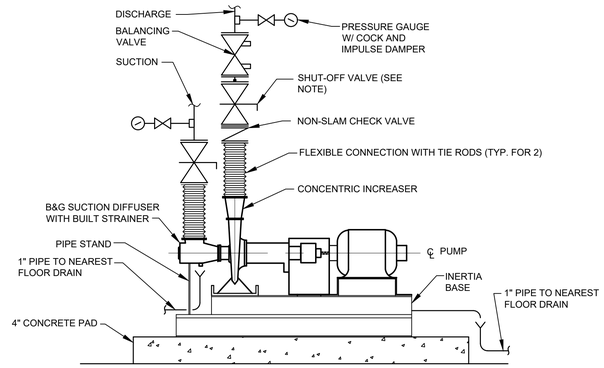

NOTE: A TRIPLE DUTY VALVE MAY BE PROVIDED IN LIEU OF CHECK, SHUT-OFF, AND BALANCING VALVES.

2 HOT WATER PUMP DETAIL
SCALE: NONE

(P-1, P-2)

ALTERNATE #1

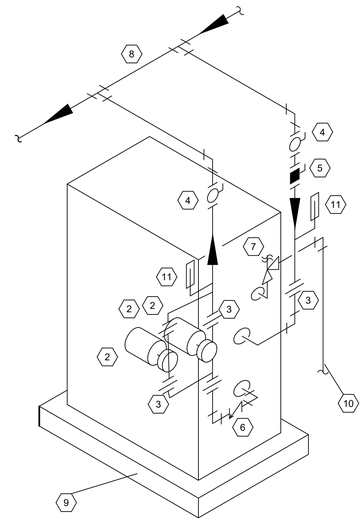

1. BOILER
2. CIRCULATING PUMP
3. UNION
4. BALL VALVE
5. CALIBRATED BALANCING VALVE
6. CHECK VALVE
7. PRESSURE RELIEF VALVE
8. HOT WATER RETURN
9. 6" CONCRETE HOUSEKEEPING PAD
10. PIPE TO FLOOR DRAIN
11. THERMOMETER

3 BOILER PIPING DETAIL
SCALE: NONE

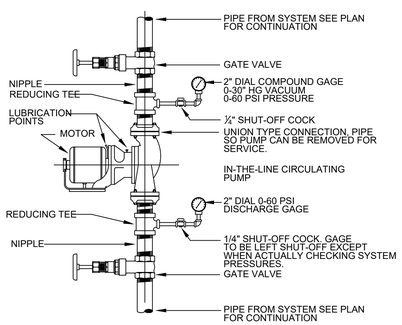

SIDE ELEVATION

INSTALLATION NOTES

1. THE PUMP SHALL BE INSTALLED DEAD LEVEL, AND SHALL NOT TOUCH OR REST ON ANY PART OF THE BUILDING STRUCTURE.
2. THE ELECTRICAL CONNECTION TO THE PUMP SHALL BE MADE THROUGH THE USE OF FLEXIBLE CONDUIT (GREENFIELD) AT LEAST 18" LONG.
3. THE PUMP SHALL BE INSTALLED SO THAT THE PUMP CAN BE COMPLETELY REMOVED WITHOUT THE DISMANTLING OR REMOVAL OF ANY PIPING OR VALVES.
4. THE MOTOR AND COUPLING SHALL BE CHECKED AND PROPERLY ALIGNED IN STRICT ACCORDANCE WITH THE MANUFACTURER'S INSTRUCTIONS.
5. THE ADJACENT PIPING SHALL BE CAREFULLY FITTED AND ERECTED SO THAT THE PUMP CAN BE INSTALLED OR REMOVED FROM THE PIPE WITHOUT FORCING OR SPRINGING.
6. AFTER THE SYSTEM HAS BEEN COMPLETED AND THE PUMP STARTED THE PUMP AND SYSTEM SHALL BE CHECKED FOR VIBRATION AND EXCESSIVE NOISE AND IMMEDIATELY CORRECTED.

LUBRICATION NOTES

1. AFTER COMPLETION OF THE SYSTEM AND BEFORE START-UP . THE PUMP SHALL BE LUBRICATED IN STRICT ACCORDANCE WITH THE MANUFACTURER'S INSTRUCTIONS.
2. A METAL INSTRUCTION PLATE SHALL BE ATTACHED TO THE PUMP IN A LOCATION WHERE IT IS CLEARLY VISIBLE. THESE INSTRUCTIONS SHALL INDICATE THE RECOMMENDED LUBRICANT, THE POINTS OF LUBRICATION, AND THE RECOMMENDED FREQUENCY OF LUBRICATION.

4 INLINE CIRCULATION PUMP AT BOILER DETAIL
SCALE: NTS

LEGEND

STRAINER
STOP VALVE
CHECK VALVE
RELIEF VALVE
DRAIN VALVE
UNION
PUMP
TEMPERATURE GAUGE
AIR SEPARATOR
3 WAY CONTROL VALVE

FACTORY SUPPLIED
DOMESTIC WATER FIELD PIPING
BOILER WATER FIELD PIPING

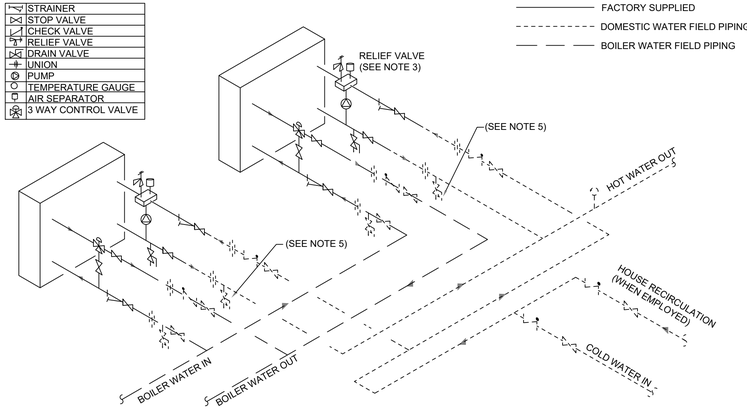

5 DOMESTIC HW HEAT EXCHANGER PIPING DETAIL
SCALE: NTS

NOTES:

1. FOR ACTUAL SIZES AND LOCATIONS OF PIPING AND OTHER CONNECTIONS TO THE HEATER, SEE DIMENSIONAL DRAWING.
2. REDUCERS, ON THE WATER INLET SIDE, SHOULD BE LOCATED ADJACENT TO THE HEATER. EXPANSION FITTINGS, ON THE WATER INLET SIDE, SHOULD BE LOCATED AS FAR AS POSSIBLE FROM THE HEATER.
3. DRAIN VALVE SHOULD BE PIPED DIRECTLY TO A FLOOR DRAIN. RELIEF VALVE SHOULD BE PIPED VERTICALLY TO A HEIGHT 19" ABOVE THE FLOOR.
4. HEATERS SHOULD BE PIPED REVERSE RETURN OR BALANCING DEVICES ON THE OUTLETS SHOULD BE EMPLOYED.
5. INSTALL A HOSE CONNECTION AT THE HOT WATER OUTLET.
6. CONTRACTOR RESPONSIBLE TO REVIEW MANUFACTURER'S INSTALLATION INSTRUCTIONS FOR ALL PIPING INSTALLATION GUIDELINES.

IF THIS BAR DOES NOT MEASURE 1", THEN DRAWING IS NOT TO FULL SCALE

No.	Date	Revisions
1	05/31/24	BIDDING DOCUMENTS

STATE OF NEW YORK · PETER CATANZARO · 054035 · LICENSED PROFESSIONAL ENGINEER

REG. EXP DATE: 10-31-26

Drawn by	WM
Checked by	PC
Project No.	44023
Scale	AS SHOWN
Date	05/31/2024

GREENMAN PEDERSEN, INC
2 EXECUTIVE BOULEVARD, SUITE 202, SUFFERN, NY 10901

Mechanical & Electrical Engineer:

Structural Engineer:

NORTH ROCKLAND HIGH SCHOOL EXTENSION BOILER REPLACEMENT

HIGH SCHOOL EXT SED# 05-02-01-06-0-007-016

86 Chapel Street, Haverstraw, NY 10923

COUNTY OF ROCKLAND

MICHAEL SHILALE ARCHITECTS, L.L.P.
140 Park Avenue New City, NY 10956 Tel 845-708-9200
www.shilale.com

© COPYRIGHT, MICHAEL SHILALE ARCHITECTS, ALL RIGHTS RESERVED.

Drawing Title
MECHANICAL DETAILS - 1

Drawing No.
M-501

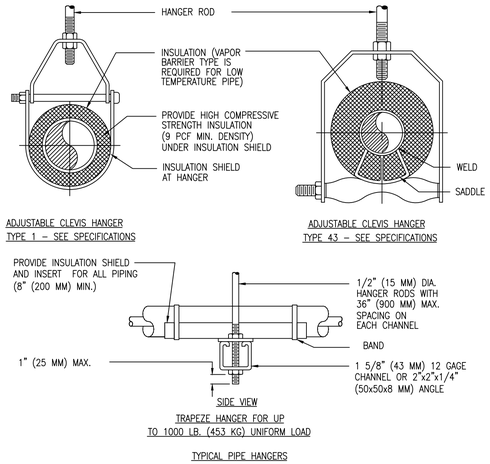

1 PIPE HANGER DETAIL
SCALE: NTS

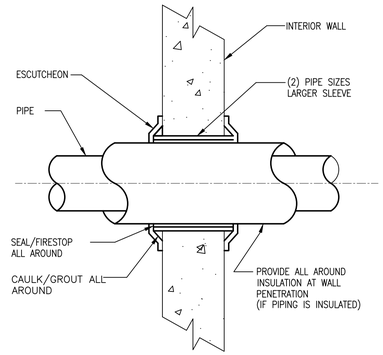

2 INTERIOR WALL PENETRATION
SCALE: NTS

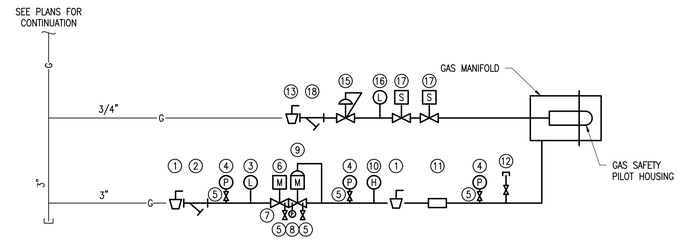

KEYED NOTES: (#)

1 MANUAL BALL VALVE
2 MAIN GAS STRAINER
3 MAIN GAS LOW PRESSURE SWITCH
4 GAS PRESSURE GAUGE
5 MANUAL TEST VALVE
6 MAIN MOTORIZED GAS VALVE WITH PROOF OF CLOSURE
7 MAIN GAS VALVE BODY
8 GAS LOW PRESSURE SWITCH (AUTO RESET)
9 MAIN REGULATOR/MOTORIZED SHUTOFF GAS VALVE WITH PROOF OF CLOSURE
10 MAIN GAS HIGH PRESSURE SWITCH
11 FUEL FLOW CONTROL VALVE (BUTTERFLY VALVE)
12 TEST COCK WITH PLUG
13 PILOT MANUAL BALL VALVE
14 PILOT STRAINER
15 PILOT GAS PRESSURE REGULATOR
16 PILOT GAS LOW PRESSURE SWITCH (MANUAL RESET)
17 PILOT SOLENOID VALVE
18 PILOT STRAINER

NOTES:

1. PROVIDE A LISTED, APPROVED, VENTLESS GAS TRAIN ASSEMBLY IN ACCORDANCE WITH THE MANUFACTURER'S REQUIREMENTS AND SPECIFICATIONS.
2. SUBMIT BURNER GAS PIPING SHOP DRAWINGS FOR APPROVAL PRIOR TO FABRICATION.

3 BOILER GAS TRAIN
SCALE: NTS

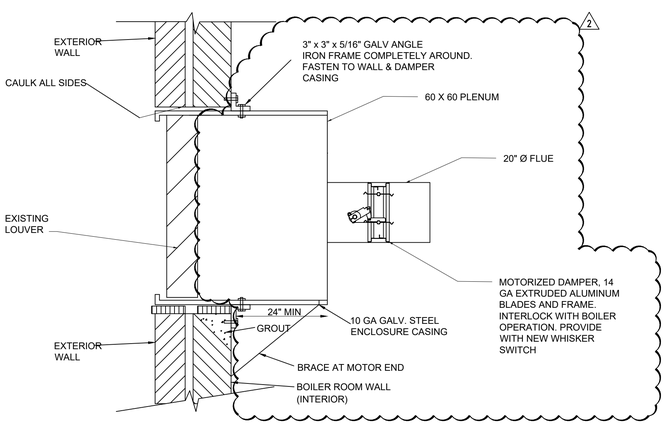

NOTE:
1. COORDINATE INSTALLATION WITH ALL DRAWINGS.

4 MOTORIZED DAMPER DETAIL
SCALE: NTS

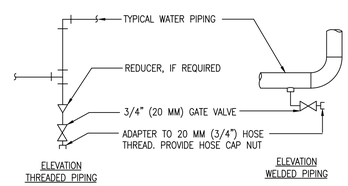

NOTES:

1. DRAIN ALL LOW POINTS AS INDICATED ABOVE.
2. WHERE SCALE POCKETS ARE SHOWN ON PIPE RISER DIAGRAMS AND/OR PLANS LOCATE DRAIN AT BOTTOM OF SCALE POCKET.

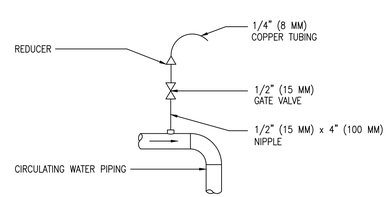

TYPICAL AIR VENT

NOTES:

1. VENT ALL HIGH POINTS INDICATED ABOVE.
2. IF AUTOMATIC AIR VENTS ARE USED, PIPE DISCHARGE TO DRAIN

5 AIR VENT AND DRAIN DETAIL
SCALE: NTS

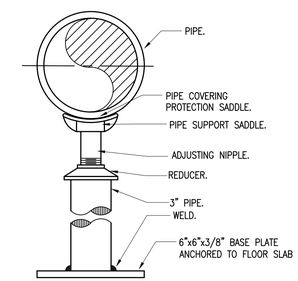

6 ADJUSTABLE PIPE/EQUIPMENT SUPPORT
SCALE: NTS

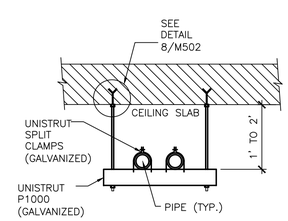

7 PIPE SUPPORT DETAIL
SCALE: NTS

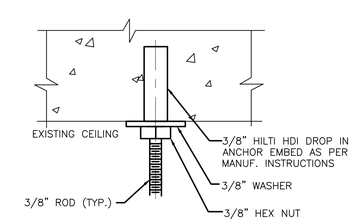

8 HANGER DETAIL
SCALE: NTS

No.	Date	Revisions
2	06/18/24	REVISIONS
1	05/31/24	BIDDING DOCUMENTS

STATE OF NEW YORK · PETER CATANZARO · 094099 · LICENSED PROFESSIONAL ENGINEER

REG. EXP DATE: 10-31-26

Drawn by	WM
Checked by	PC
Project No.	44023
Scale	AS SHOWN
Date	05/31/2024

GREENMAN PEDERSEN, INC
2 EXECUTIVE BOULEVARD, SUITE 202, SUFFERN, NY 10901

Mechanical & Electrical Engineer:

Structural Engineer:

NORTH ROCKLAND HIGH SCHOOL EXTENSION BOILER REPLACEMENT

HIGH SCHOOL EXT SED# 05-02-01-06-0-007-016

COUNTY OF ROCKLAND

65 Chapel Street, Haverstraw, NY 10923

MICHAEL SHILALE ARCHITECTS, L.L.P.
140 Park Avenue New City, NY 10956 Tel 845-708-9200
www.shilale.com

© COPYRIGHT, MICHAEL SHILALE ARCHITECTS, ALL RIGHTS RESERVED.

Drawing Title
MECHANICAL DETAILS - 2

Drawing No.
M-502

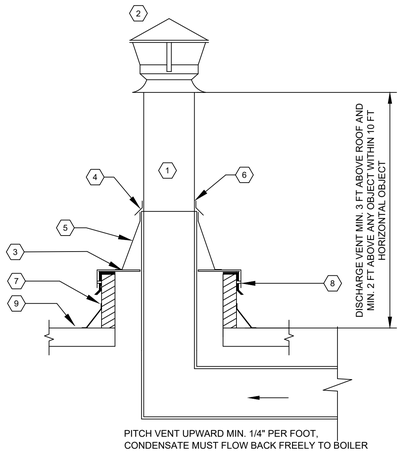

1. DOUBLE WALL FLUE PIPE
2. STACK CAP
3. MODIFIED ENCLOSURE OVER ROOF OPENING, REFER TO ARCH PLANS FOR ADDITIONAL DETAILS
4. STORM COLLAR
5. TALL CONE FLASHING
6. SILICONE SEALANT, AS REQUIRED, COORDINATE SEALING DETAILS WITH ARCHITECT.
7. EXISTING ROOF CURB AND FLASHING, COORDINATE ROOFING DETAILS WITH ARCHITECT.
8. LAG TO CURB, COORDINATE CURB CONNECTION DETAILS WITH ARCHITECT.
9. EXISTING ROOF CONSTRUCTION.

1 DOUBLE WALL FLUE PIPE DETAIL
SCALE: NONE

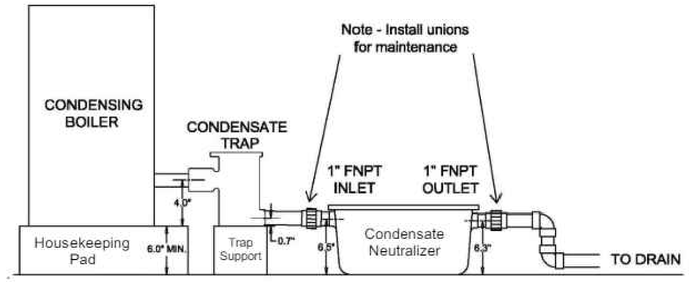

2 CONDENSATE NEUTRALIZER DETAIL
SCALE: NONE

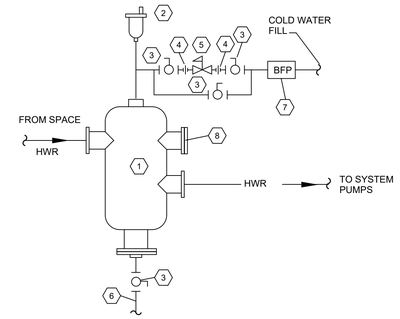

1. AIR SEPARATOR
2. HIGH CAPACITY FLOAT TYPE AIR VENT
3. BALL VALVE
4. UNION
5. REDUCING VALVE WITH CHECK VALVE
6. 1" BLOWDOWN, PIPE TO FLOOR DRAIN
7. BACKFLOW PREVENTER
8. STRAINER REMOVAL FLANGE

3 AIR SEPARATOR PIPING DETAIL
SCALE: NONE

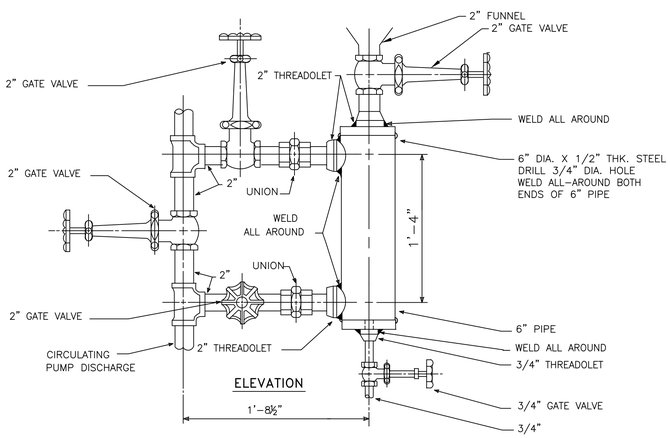

4 WATER TREATMENT SHOT FEEDER
SCALE: NONE

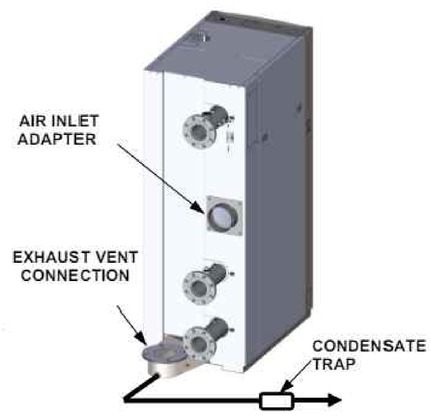

5 BOILER INTAKE AND EXHAUST VENT CONNECTION
SCALE: NONE

No.	Date	Revisions
1	05/31/24	BIDDING DOCUMENTS

STATE OF NEW YORK · PETER CATANZARO · 054035 · LICENSED PROFESSIONAL ENGINEER
REG. EXP DATE: 10-31-26

Drawn by WM
Checked by PC
Project No. 44023
Scale AS SHOWN
Date 05/31/2024

GREENMAN, PEDERSEN, INC
2 EXECUTIVE BOULEVARD, SUITE 202, SUFFERN, NY 10901

Mechanical & Electrical Engineer:
Structural Engineer:

NORTH ROCKLAND HIGH SCHOOL EXTENSION BOILER REPLACEMENT
HIGH SCHOOL EXT SED# 05-02-01-06-0-007-016
6 Chapel Street, Stony Point, NY 10923
COUNTY OF ROCKLAND

MICHAEL SHILALE ARCHITECTS, L.L.P.
140 Park Avenue New City, NY 10956 Tel 845-708-9200
www.shilale.com

© COPYRIGHT, MICHAEL SHILALE ARCHITECTS, ALL RIGHTS RESERVED.

Drawing Title
MECHANICAL DETAILS - 3

Drawing No.
M-503

POWER & SYSTEMS

SYMBOL	DESCRIPTION
2,4	CONDUIT AND WIRE RUN CONCEALED IN FLOOR, CEILING OR WALL FOR NEW CONSTRUCTION AND SURFACE EXISTING WALLS. HASH MARKS DENOTE NUMBER OF WIRES IF MORE THAN TWO ARE REQUIRED. ARROWS DENOTE HOME-RUNS OF PARTICULAR CIRCUITS, MINIMUM 2#12+1#12G THHN/THWN IN 3/4" CONDUIT U.O.I. ALL BRANCH CIRCUITS FOR 120V IF GREATER THAN 100 FEET SHALL BE ONE SIZE LARGER MINIMUM, AND FOR 277V IF MORE THAN 200 FEET ONE SIZE LARGER MINIMUM (BOTH TO MEET VOLTAGE DROP REQUIREMENTS)
PNL-1	"PNL" INDICATES PANEL DESIGNATION AND "1" INDICATES CIRCUIT NUMBER. CIRCUIT WIRE SHALL BE MINIMUM 2#12+1#12G THHN/THWN IN 3/4" CONDUIT, U.O.I. ALL COMPUTER CIRCUIT SHALL ALSO BE PROVIDED WITH A SEPARATE NEUTRAL.
	LIGHTING AND POWER PANEL BOARD, FLUSH MOUNTED IN WALL WITH COVER.
$a	SINGLE POLE, LINE-VOLTAGE TOGGLE SWITCH MOUNTED AT 48" A.F.F. SUBSCRIPT DENOTES LIGHTING FIXTURES CONTROLLED. 'k' INDICATES KEY OPERATED SWITCH. '3' INDICATES THREE-WAY SWITCH. 'vs' INDICATES INTEGRATED WITH OCCUPANCY (IN VACANCY MODE) SENSOR (MANUAL ON/AUTOMATIC OFF). 'oc' INDICATES INTEGRATED WITH OCCUPANCY SENSOR (AUTOMATIC ON/OFF) 'lh' INDICATES LIGHTED HANDLE SWITCH. 'a' INDICATES LIGHTING FIXTURES CONTROL. 'e' INDICATES CONTROL OF EMERGENCY LIGHTING FIXTURE WITHIN THE ROOM OR SPACE INDICATED. REFER TO LIGHTING DWGS FOR LOCATION OF SWITCHES.
$La	LOW VOLTAGE DECORA STYLE SWITCH FOR OCCUPANCY SENSOR IN VACANCY MODE (MANUAL 'ON'/AUTOMATIC OFF) MOUNTED AT 48" A.F.F. SUBSCRIPT INDICATES LIGHTING FIXTURES CONTROL.
$D	LOW VOLTAGE SWITCH. 'D' DENOTES AN OVER-RIDE FOUR POSITION PUSH BUTTON SWITCH SET TO ON/OFF, 30%, 70% AND 100%, REFER TO LIGHTING DWGS FOR LOCATION OF SWITCHES. MOUNT AT 48" A.F.F.
$2D	LOW VOLTAGE SWITCH. '2D' DENOTE AN OVER-RIDE TWO POSITION PUSH BUTTON SWITCH ON/OFF BUTTON WITH SLIDER FOR DIMMING
$DP	LOW VOLTAGE THREE-WAY DIMMING PAD SWITCH
$H	"SIVOIA QS" LOW VOLTAGE PUSHBUTTON SWITCH CONTROL MOUNTED AT 48" A.F.F. SUBSCRIPT "H" INDICATES WINDOW SHADES CONTROL.
$R/L	THREE POSITION KEY ACTIVATED RAISE & LOWER CONTROL SWITCH MOUNTED AT 48" A.F.F.
$M WP	MOTOR STARTER SNAP ACTION TOGGLE SWITCH WITH THERMO OVERLOAD. "WP" INDICATES WEATHER PROOF
5 S, SW	DUPLEX THREE WIRE GROUNDED RECEPTACLE, 20A, 125V. (NEMA 5-20R) MOUNTED 18" A.F.F. U.O.I. SUBSCRIPT "F" INDICATES FURNITURE MOUNTED. SUBSCRIPT "K" INDICATES SAFETY TYPE, "S" INDICATES SURGE SUPPRESSOR, "R" RACK MOUNTED, "SW" INDICATES SWITCHED (CONTROLLED), NUMERAL INDICATES CIRCUIT NUMBER.
5 WP	DUPLEX THREE WIRE GROUNDED RECEPTACLE, 20A, 125V. (NEMA 5-20R) WITH "GFI" GROUND FAULT INTERRUPTER. MOUNTED 18" A.F.F. U.O.I. SUBSCRIPT "F" INDICATES FURNITURE MOUNTED, "WP" INDICATES WEATHERPROOF, NUMERAL INDICATES CIRCUIT NUMBER.
5 30, L	SINGLE THREE WIRE GROUNDED RECEPTACLE, 20A, 125V. (NEMA 5-20R) MOUNTED 18" A.F.F. U.O.I. SUBSCRIPTS "30" INDICATES 30A (NEMA 5-30R) OUTLET, "L" INDICATES TWISTLOCK OUTLET. NUMERAL INDICATES CIRCUIT NUMBER.
5 S, SW	QUAD. THREE WIRE GROUNDED RECEPTACLE, 20A, 125V. (NEMA 5-20R) MOUNTED 18" A.F.F. U.O.I. SUBSCRIPTS "F" INDICATES FURNITURE MOUNTED, "S" INDICATES SURGE SUPPRESSOR, "R" INDICATES RACK MOUNTED, SUBSCRIPT "K" INDICATES SAFETY TYPE. "SW" INDICATES SWITCHED (CONTROLLED). NUMERAL INDICATES CIRCUIT NUMBER.
5 L, R	SINGLE THREE WIRE GROUNDED RECEPTACLE, 20A, 250V. (NEMA L6-20R) MOUNTED 18" A.F.F. U.O.I. SUBSCRIPTS "R" INDICATES FURNITURE MOUNTED, "30" INDICATES 30A (NEMA L6-30R) OUTLET, "L" INDICATES TWISTLOCK OUTLET. NUMERAL INDICATES CIRCUIT NUMBER.
5 P	DUPLEX THREE WIRE GROUNDED RECEPTACLE, 20A, 125V. (NEMA 5-20R) CEILING MOUNTED. "P" INDICATES MOUNTED AT CEILING WITH PULL-DOWN SAFETY REEL. NUMERAL INDICATES CIRCUIT NUMBER.
5 WP	DUPLEX THREE WIRE GROUNDED RECEPTACLE, 20A, 125V. (NEMA 5-20R) WITH "GFI" GROUND FAULT INTERRUPTER STANCHION MOUNTED 18" A.F.F. U.O.I. "WP" INDICATES WEATHERPROOF, NUMERAL INDICATES CIRCUIT NUMBER.
	COMBINATION DISCONNECT SWITCH/MOTOR STARTER W/ PUSH BUTTON STATIONS AND H-O-A, STARTER RATING AS PER HORSEPOWER OF THE MOTOR INDICATED.
	MOTOR STARTER WITHOUT DISCONNECT SWITCH, WITH PUSH BUTTON STATIONS & H-O-A. STARTER RATING AS PER HORSEPOWER OF THE MOTOR INDICATED.
WP 30/U/2	SWITCH RATING FUSE SIZE ("U" IF UNFUSED) POLES DISCONNECT SWITCH, RATING AND FUSING NOTED. HORSEPOWER RATING AS REQUIRED BY MOTOR LOAD. 'WP' INDICATES WEATHERPROOF NEMA 4X ENCLOSURE, OTHERWISE NEMA-1. SUBSCRIPT "L" INDICATES LOCKABLE TYPE.
VFD	VARIABLE FREQUENCY DRIVE CONTROL PANEL WITH DISCONNECT SWITCH.
PB	PULL BOX. SIZE AS REQUIRED.
SS	REMOTE START - STOP PUSH BUTTON CONTROL
R	RELAY CONTROL
TK	TORK TIME CLOCK WITH DAY LIGHT SAVINGS AND FOR 360 DAYS SCHEDULING FEATURES
PC	PHOTOELECTRIC SENSOR - ROOF MOUNTED. LOCATION TO BE DETERMINED BASED ON FIELD CONDITION.

GENERAL NOTES:

1. FOR AN EXPLANATION OF ABBREVIATIONS AND SYMBOLS USED ON THESE DRAWINGS, SEE THE ABBREVIATION LIST AND SYMBOLS LIST ON THIS SHEET.
2. ALL ELECTRICAL WORK SHALL BE DONE IN COMPLIANCE WITH 2020 NYS BUILDING CODE, NATIONAL ELECTRIC CODE 2017 AND ALL OTHER APPLICABLE CODE & LOCAL LAWS AS REQUIRED.
3. THE CONTRACTOR SHALL CHECK THE LOCATION, NUMBER AND SIZE OF ALL CHASES PROVIDED ON THE CONSTRUCTION PLANS AND ARRANGE FOR ANY CHASES REQUIRED FOR CABINET OR BOXES.
4. THE CONTRACTOR SHALL COORDINATE WITH THE HVAC, PLUMBING, ARCHITECTURAL AND STRUCTURAL TRADES FOR EXACT LOCATIONS OF MOTORS AND EQUIPMENT, IN ORDER TO AVOID INTERFERENCE.
5. THE CONTRACTOR SHALL CHECK WITH THE HVAC TRADE CONCERNING THE LOCATION OF STEEL PLATE FIRE STOPS IN CORRIDORS AND HUNG CEILINGS AND SHALL FURNISH THE HVAC TRADE WITH SIZES AND LOCATIONS OF OPENINGS NECESSARY TO ACCOMMODATE THE ELECTRICAL CONDUITS PIERCING THE FIRE STOPS.
6. IN UNFINISHED PORTIONS OF THE BUILDING, SUCH AS BOILER ROOM, FAN ROOMS, PIPE SPACES, ETC., LOCATIONS OF CONDUIT AND OUTLETS ARE APPROXIMATE AND SHALL CLEAR PIPING AND ALL OTHER CONSTRUCTION. CONDUIT IN THESE PORTIONS OF THE BUILDING SHALL BE RUN EXPOSED.
7. IN THE BOILER ROOM, SYSTEM CONDUITS, SUCH AS FOR LIGHTING AND POWER FEEDERS, LOW VOLTAGE, FIRE SIGNAL, ETC., SHALL NOT BE RUN OVER BOILERS.
8. NO CONDUIT SHALL BE RUN IN ANY FLOOR IN CONTACT WITH THE EARTH UNLESS OTHERWISE DIRECTED ON THE PLAN. IN SUCH AREAS, CONDUIT FOR MOTORS AND STARTERS SHALL BE RUN OVERHEAD, SUPPORTED AS REQUIRED.
9. PULL AND JUNCTION BOXES SHALL BE SURFACE TYPE IN UNFINISHED AREAS AND FLUSH TYPE IN FINISHED AREAS (AT NEW WALLS/PARTIONS), UNLESS OTHERWISE NOTED. THE JUNCTION AND PULL BOXES SHALL BE LOCATED TO SUIT CONDUIT ENTRANCE, BUT SHALL, IN ALL CASES, BE LOCATED TO AVOID INTERFERENCE WITH EQUIPMENT FROM OTHER TRADES AND SHALL BE LOCATED SO THAT COVERS ARE READILY ACCESSIBLE.
10. UNLESS OTHERWISE NOTED ON FLOOR PLANS OR IN FLOOR PLAN NOTES, SWITCHES SHALL BE INSTALLED AT 4'-0" ABOVE FINISHED FLOOR. WHERE SWITCH HEIGHTS ARE GIVEN ON THESE DRAWINGS FOR AREAS IN WHICH THERE ARE TILE WAINSCOTS, SUCH AS TOILETS, LOCKER ROOMS, ETC. THE CONTRACTOR SHALL ADJUST SWITCH HEIGHTS, IF NECESSARY TO AVOID INTERFERENCE WITH THE WAINSCOT.
11. CONTRACTOR SHALL PROVIDE SEPARATE RACEWAYS FOR CONDUCTORS ON NORMAL AND EMERGENCY CIRCUITS.
12. PROVIDE FIRE STOP SEALS TO ALL PENETRATIONS OF ALL EXISTING FLOORS, SLABS, AND WALLS/PATITIONS; AND ALL NEW FIRE RATED WALLS & PARTITIONS.
13. PROVIDE DEFLECTION FITTINGS AT ALL REQUIRED CROSSINGS OF EXPANSION POINTS.
14. ALL CIRCUITS CONTAINING GFI OUTLETS AND CIRCUITS RECOMMENDED BY THE MANUFACTURERS SHALL HAVE A SEPARATE DEDICATED NEUTRAL.
15. ALL COMPONENTS SHOWN ON RISER DIAGRAMS, BUT NOT ON THE PLAN OR VICE VERSA, SHALL BE INCLUDED AS IF SHOWN ON BOTH.
16. CONTRACTOR SHALL NOT INSTALL MORE THAN 3 CURRENT CARRYING CONDUCTORS IN A RACEWAY UNLESS OTHERWISE SPECIFICALLY INDICATED ON THE DRAWINGS.
17. THE ELECTRICAL CONTRACTOR SHALL REVIEW ALL TRADES CONTRACT DOCUMENTS TO DETERMINE SPECIFIC MOUNTING LOCATIONS FOR ELECTRICAL EQUIPMENT.
18. ALL MOUNTING HEIGHTS SHALL BE MEASURED FROM FINISHED FLOOR TO CENTERLINE OF DEVICES EXCEPT FOR EXIT SIGNS.
19. RIGID NONMETALLIC CONDUIT (RNMC) SHALL NOT BE INSTALLED WITHIN THE BUILDING FOOTPRINT. UNLESS OTHERWISE INDICATED.
20. NO CONDUIT IN THE BUILDING SHALL BE IN CONTACT WITH THE EARTH UNLESS OTHERWISE NOTED.
21. CONTRACTOR SHALL BE RESPONSIBLE FOR IDENTIFYING EACH CKT IN ALL MANHOLES, HAND HOLES, WIRE WAYS & ALL OTHER ENCLOSURES & AT ALL TERMINATION.
22. ALL SERVICE ENTRANCE CONDUITS ARE TO BE PITCHED AS REQUIRED AND SEALED AT THE POINT OF ENTRY TO THE BUILDING IN ORDER TO AVOID WATER PENETRATION TO THE BUILDING THROUGH THESE CONDUITS.
23. FINAL LOCATION OF ALL ELECTRICAL EQUIPMENTS, DEVICES SHALL BE COORDINATED AT FIELD WITH ALL OTHER TRADES AND WITH EXISTING BUILDING ELEMENTS, PIPES, EQUIPMENTS, DEVICES ETC. IN ORDER TO HAVE CODE COMPLIANT INSTALLATION.
28. ROUTING OF ELECTRICAL CONDUITS IF SHOWN IN THE DRAWINGS ARE TENTATIVE. THE CONTRACTOR IS RESPONSIBLE TO FINALIZE THE ROUTING OF ALL ELECTRICAL CONDUITS AT FIELD IN COORDINATION WITH ALL OTHER TRADES AND EXISTING BUILDING ELEMENTS, STRUCTURES, PIPES, EQUIPMENTS, & DEVICES ETC. FOR CODE COMPLIANT INSTALLATION.
29. THE ELECTRICAL CONTRACTOR IS REQUIRED TO COORDINATE WITH THE MECHANICAL CONTRACTOR DURING THE MECHANICAL EQUIPMENT SUBMITTAL REVIEW PROCESS IN ORDER TO VERIFY THE REQUIREMENT OF INSTALLING NEUTRAL WIRE IN THE CONDUIT TO FEED ALL HVAC EQUIPMENT SUCH AS ROOF TOP UNIT PRIOR TO INSTALLATION OF THE WIRES IN CONDUIT.
30. THE ELECTRICAL CONTRACTOR IS RESPONSIBLE TO COORDINATE WITH OTHER TRADES AT FIELD SO THAT NO FOREIGN SYSTEM SUCH AS PIPING, DUCT, LEAK PROTECTION APPARATUS, OR OTHER EQUIPMENT FOREIGN TO THE ELECTRICAL INSTALLATION SHALL BE RUN OVER THE ELECTRICAL EQUIPMENT INSTALLATION.
31. THE CONTRACTOR IS REQUIRED TO PERFORM CONTINUITY AND INSULATION RESISTANCE TEST BY MEGGER FOR ALL FEEDERS AND BRANCH CIRCUITS BEING INSTALLED AND BEING MODIFIED UNDER THIS PROJECT.

ABBREVIATIONS

A	AMPERE	KWH	KILOWATT HOUR
AC	ALTERNATING CURRENT	LP	LIGHTING PANEL
AF	FUSE RATING IN AMPS	LTG	LIGHTING
AFF	ABOVE FINISHED FLOOR	MCC	MOTOR CONTROL CENTER
AHU	AIR HANDLING UNIT	MECH	MECHANICAL
ARCH	ARCHITECTURAL	MER	MECHANICAL EQUIPMENT ROOM
AS	SWITCH RATING IN AMPS		
ATS	AUTOMATIC TRANSFER SWITCH	MLO	MAIN LUG ONLY
		MTD	MOUNTED
C	CONDUIT	N	NEUTRAL
CB	CIRCUIT BREAKER	N.C.	NORMALLY CLOSED
CLG	CEILING	N.O.	NORMALLY OPEN
CKT(S)	CIRCUIT(S)	P	POLE(S)
COL	COLUMN	PB	PULL BOX
		PNL	PANEL
DWG	DRAWING	PP	POWER PANEL
E	EXISITNG TO REMAIN	PWR	POWER
ER	EXISITNG TO BE REMOVED	RC	REMOTE CONTROL
ERR	EXISITNG TO BE RELOCATED	REL	RELOCATED
		RGC	RIGID GALVANIZED CONDUIT
EC	EMPTY CONDUIT		
		SECT	SECTION
		SP	SPARE
EF	EXHAUST FAN		
		SPR	SPARE
		STD	STANDARD
EXH	EXHAUST	SUR	SURFACE
FL	FLOOR	SW	SWITCH
		SWBD	SWITCHBOARD
G	GUARD		
GND	GROUND		
GFI	GROUND FAULT INTERRUPTER		
IG	ISOLATED GROUND	TYP	TYPICAL
IWB	INTERACTIVE WHITE BOARD	UOI	UNLESS OTHERWISE INDICATED
JB	JUNCTION BOX	V	VOLT
		VAV	VARIABLE AIR VOLUME
KVA	KILOVOLT AMPERE	W	WATT
KW	KILOWATT	WP	WEATHER PROOF
AFCI	ARC FAULT CIRCUIT INTERRUPTER		

NOTE - ALL THE ABOVE ABBREVIATIONS MAY NOT BE USED

ELECTRICAL CONSTRUCTION NOTES

1. CONTRACTOR SHALL MAINTAIN UNINTERRUPTED POWER SUPPLY TO THE SCHOOL BUILDING DURING THE CONSTRUCTION. POWER IS TO BE MAINTAINED AT ALL TIMES, UNLESS OTHERWISE INSTRUCTED, ALONG WITH THE ADEQUATE POWER SUPPLY FOR THE CONCURRENT CONSTRUCTION AND MAINTENANCE PROJECTS.
2. THE MAINTENANCE OF POWER SUPPLY INCLUDES BOTH THE OVERALL POWER SERVICE TO THE BUILDING AS WELL AS LOCAL POWER SUPPLY TO THE SCHOOL AREAS TEMPORARILY AFFECTED BY THE WORK OF THIS CONTRACT. THE CONTRACTOR SHALL COORDINATE ALL HIS WORK WITH THE SCHOOL.
3. PROVIDING UNINTERRUPTED POWER SERVICE TO THE ENTIRE BUILDING AND POWER SUPPLY TO SCHOOL AREAS TEMPORARILY AFFECTED BY THE WORK OF THIS CONTRACT SHALL BE ACCOMPLISHED BY VARIOUS MEANS SUCH AS TEMPORARY BYPASS FEEDERS, TEMPORARY SWITCHES SUPPLYING PERMANENT FEEDERS, ETC.
4. THE CONTRACTOR SHALL ARRANGE TO WORK CONTINUOUSLY, INCLUDING OVERTIME, IF REQUIRED, TO ASSURE THAT SERVICES WILL BE SHUTDOWN ONLY DURING THE TIME ACTUALLY REQUIRED TO MAKE THE NECESSARY DISCONNECTIONS/RECONNECTIONS TO EXISTING WORK.
5. THE CONTRACTOR SHALL GIVE THIRTY DAYS WRITTEN NOTICE IN ADVANCE TO THE SCHOOL OF ANY REQUIRED SHUTDOWN, INCLUDING THE ESTIMATED PERIOD.
6. THE CONTRACTOR IS REQUIRED TO COORINATE WITH THE SCHOOL FACILITY TO ARRANAGE FOR A METERED POWER FOR CONSTRUCTION PURPOSE BASED ON A RATE DEFINED BY THE FACILITY. THE CONTRACTOR IS RESPONSIBLE FOR THE TEMPORARY CONSTRUCTION POWER.

ELECTRICAL DEMOLITION NOTES

1. THE DEMOLITION WORK SHALL BE CARRIED ON IN EVERY RESPECT IN A THOROUGH AND WORKMANLIKE MANNER.
2. ALL DEMOLITION, REMOVAL, AND DISPOSAL WORK SHALL BE IN COMPLIANCE WITH THE REQUIREMENTS OF THE BUILDING CODE AND WITH ALL STATE AND FEDERAL REGULATIONS.
3. REMOVE ALL DEBRIS NOT EXPLICITLY DESIGNATED TO BE SALVAGED (TO REMAIN) FROM THE PREMISES AND LEGALLY DISPOSE OFF AWAY FROM PREMISES.
4. ITEMS INDICATED TO BE SALVAGED SHALL BE REMOVED EITHER BEFORE DEMOLITION OR DURING THE PROCESS OF THE WORK, STORED AND PROTECTED ON THE SITE IN A LOCATION DESIGNATED BY THE OWNER'S REPRESENTATIVE. THESE ITEMS WILL BE IDENTIFIED AND RETAINED BY THE OWNER.
5. CAREFULLY REMOVE AND PROTECT ALL ITEMS TO BE SAVED AND REUSED AS INDICATED ON DRAWINGS. REPLACE ANY ITEMS THAT ARE DAMAGED BY REMOVAL AT YOUR OWN COST. NOTIFY THE OWNER IN WRITING OF ANY ITEM THAT IS DAMAGED PRIOR TO REMOVAL SO THAT THEY MAY ASCERTAIN THE ITEM'S CONDITION.
6. PROTECT MATERIALS, SURFACES AND STRUCTURE, WHICH ARE TO REMAIN, FROM DAMAGE; IF DAMAGE OCCURS, REPAIR OR REPLACEMENT SHALL BE MADE BY THE CONTRACTOR, TO THE SATISFACTION OF THE OWNER, AND AT THE EXPENSE OF THE CONTRACTOR.
7. DISCONNECT, REMOVE AND RELOCATE ANY ELECTRICAL EQUIPMENT NOT SHOWN ON THESE DRAWINGS AS PART OF THIS CONTRACT, BUT INTERFERES WITH THE WORK UNDER THIS CONTRACT. THIS WORK SHALL NOT BE CONSIDERED EXTRA AND SHALL BE DONE AT NO ADDITIONAL COST TO THE OWNER.
8. VISIT AND EXAMINE CAREFULLY THE AREAS AFFECTED BY THIS WORK TO BECOME FAMILIAR WITH EXISTING CONDITIONS AND WITH THE DIFFICULTIES THAT ATTEND THE EXECUTION OF THIS WORK
9. RELOCATE AND/OR ALTER THE EXISTING BUILDING COMPONENTS AS DIRECTED BY OWNER'S REPRESENTATIVE. ALL RELOCATION OR ALTERATIONS TO BUILDING SHALL BE RESTORED TO THEIR ORIGINAL WORKING CONDITIONS AFTER SUCH RELOCATION OR ALTERATION WORK.
10. AT THE COMPLETION OF DEMOLITION WORK, ALL RUBBISH, DEBRIS AND WASTE MATERIALS SHALL BE REMOVED BY THE CONTRACTOR AND THE PREMISES SHALL BE LEFT IN CLEAN CONDITION.
11. THE CONTRACTOR SHALL DISCONNECT THE CIRCUIT WIRING NOT IN USE AND SHALL REMOVE ALL NECESSARY WIRING MATERIALS, INCLUDING EXPOSED CONDUITS AND JUNCTION BOXES WHICH IMPEDE THE NEW WORK.
12. MAINTAIN CONTINUITY FOR ALL EQUIPMENT TO REMAIN. PROVIDE ALL REQUIRED ACCESSORIES, WIRING AND CONDUIT AS REQUIRED.
13. SUBSTANTIAL JOB COMPLETION INCORPORATES DEMOLITION OF EXISTING SYSTEMS IN CONTRACT.
14. THE EXISTING FIRE ALARM SYSTEM SHALL REMAIN OPERATIONAL AT ALL TIMES DURING CONSTRUCTION.
15. THE CONTRACTOR IS REQUIRED TO COORDINATE WITH GC AND ALL OTHER TRADES TO REVIEW THE EXISTING ELECTRICAL COMPONENTS, CONDUITS, DEVICES, PULL BOX, JUNCTION BOX ETC. THAT ARE ASSOCIATED WITH THE WALL THAT ARE BEING DEMOLISHED OR RESURFACED. REROUTE THE CONDUITS AND RELOCATE THOSE ELECTRICAL COMPONENTS AS REQUIRED AND FOR THE COMPLETION OF GC WORK. EXTEND CONDUIT WIRING AS REQUIRED TO REROUTING. MAINTAIN CIRCUIT CONTINUITY OF THE DEVICES THAT ARE BEING AFFECTED.

No.	Date	Revisions
1	05/31/24	BIDDING DOCUMENTS

STATE OF NEW YORK · SAMUL HAQUE · 091658 · LICENSED PROFESSIONAL ENGINEER

REG. EXP DATE: 04-30-27

Drawn by AWF
Checked by SH
Project No. 44023
Scale AS SHOWN
Date 05/31/2024

GREENMAN PEDERSEN, INC
2 EXECUTIVE BOULEVARD, SUITE 202, SUFFERN, NY 10901

Mechanical & Electrical Engineer:

Structural Engineer:

NORTH ROCKLAND HIGH SCHOOL EXTENSION BOILER REPLACEMENT

HIGH SCHOOL EXT SED# 05-02-01-06-0-007-016

65 Chapel Street
Haverstraw, NY 10927

COUNTY OF ROCKLAND

MICHAEL SHILALE ARCHITECTS, L.L.P.
140 Park Avenue New City, NY 10956 Tel 845-708-9200
www.shilale.com

© COPYRIGHT, MICHAEL SHILALE ARCHITECTS, ALL RIGHTS RESERVED.

Drawing Title
ELECTRICAL NOTES AND SYMBOLS

Drawing No.
E-001

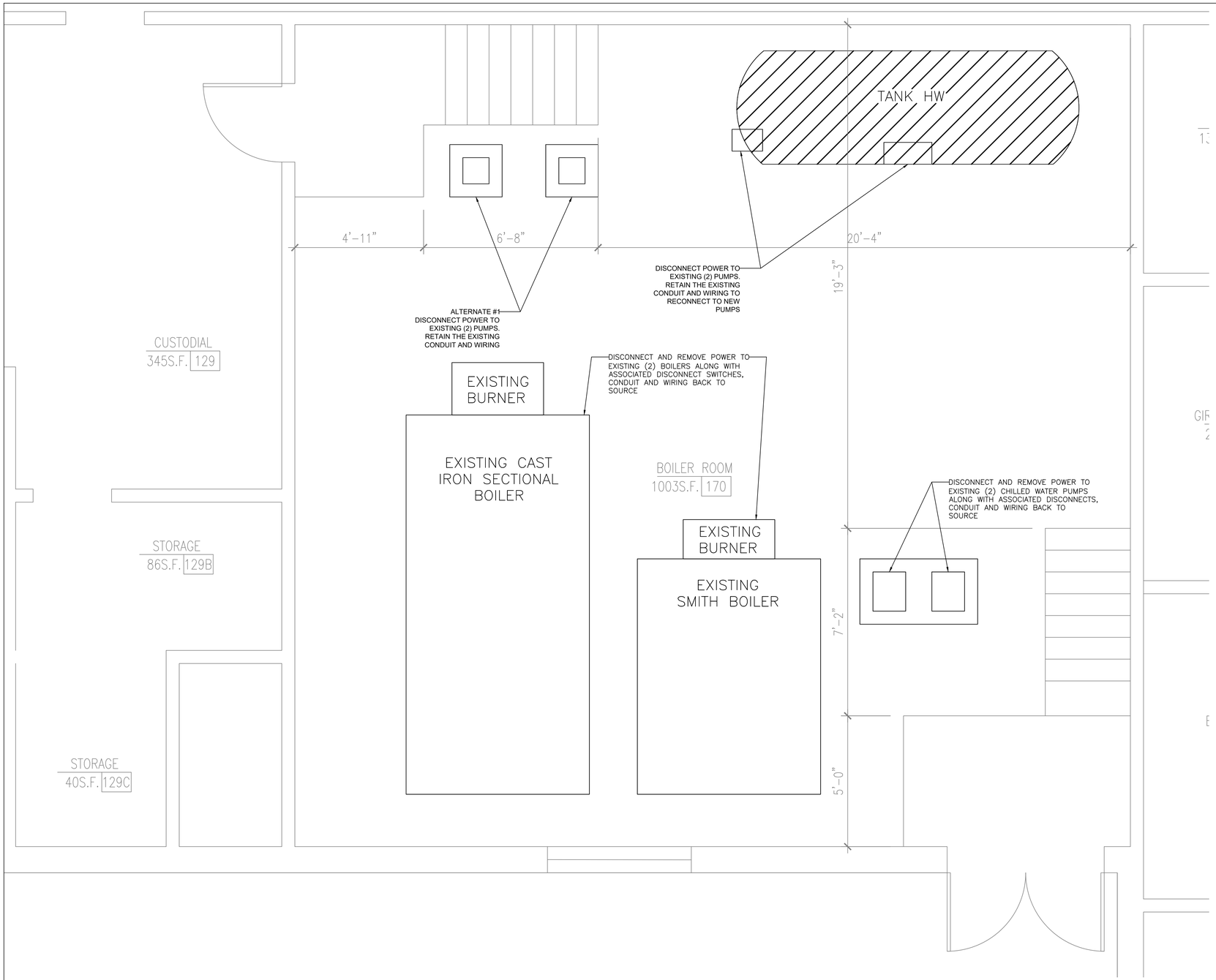

1 ELECTRICAL BOILER ROOM PLAN - REMOVAL

SCALE: 1/2" = 1'- 0"

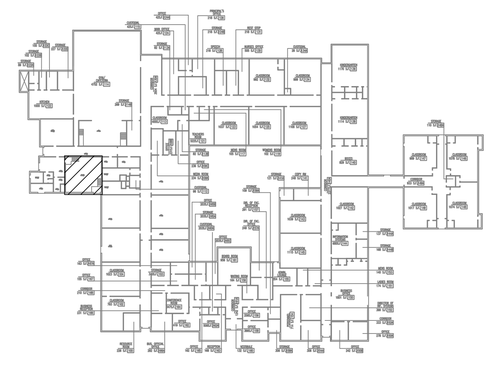

KEY PLAN

PLAN NORTH

0 1/2 1
IF THIS BAR DOES NOT MEASURE 1", THEN DRAWING IS NOT TO FULL SCALE

No.	Date	Revisions
1	05/31/24	BIDDING DOCUMENTS

STATE OF NEW YORK · SAMIUL HAQUE · 091658 · LICENSED PROFESSIONAL ENGINEER
REG. EXP DATE: 04-30-27

Drawn by AWF
Checked by SH
Project No. 44023
Scale AS SHOWN
Date 05/31/2024

Mechanical & Electrical Engineer: GREENMAN PEDERSEN, INC
2 EXECUTIVE BOULEVARD, SUITE 202, SUFFERN, NY 10901
Structural Engineer:

NORTH ROCKLAND HIGH SCHOOL EXTENSION BOILER REPLACEMENT
HIGH SCHOOL EXT SED# 05-02-01-06-0-007-016
85 Chapel Street, Haverstraw, NY 10923
COUNTY OF ROCKLAND

MICHAEL SHILALE ARCHITECTS, L.L.P.
140 Park Avenue New City, NY 10956 Tel 845-708-9200
www.shilale.com

© COPYRIGHT, MICHAEL SHILALE ARCHITECTS, ALL RIGHTS RESERVED.

Drawing Title
ELECTRICAL DEMOLITION PLAN

Drawing No.
ED-101

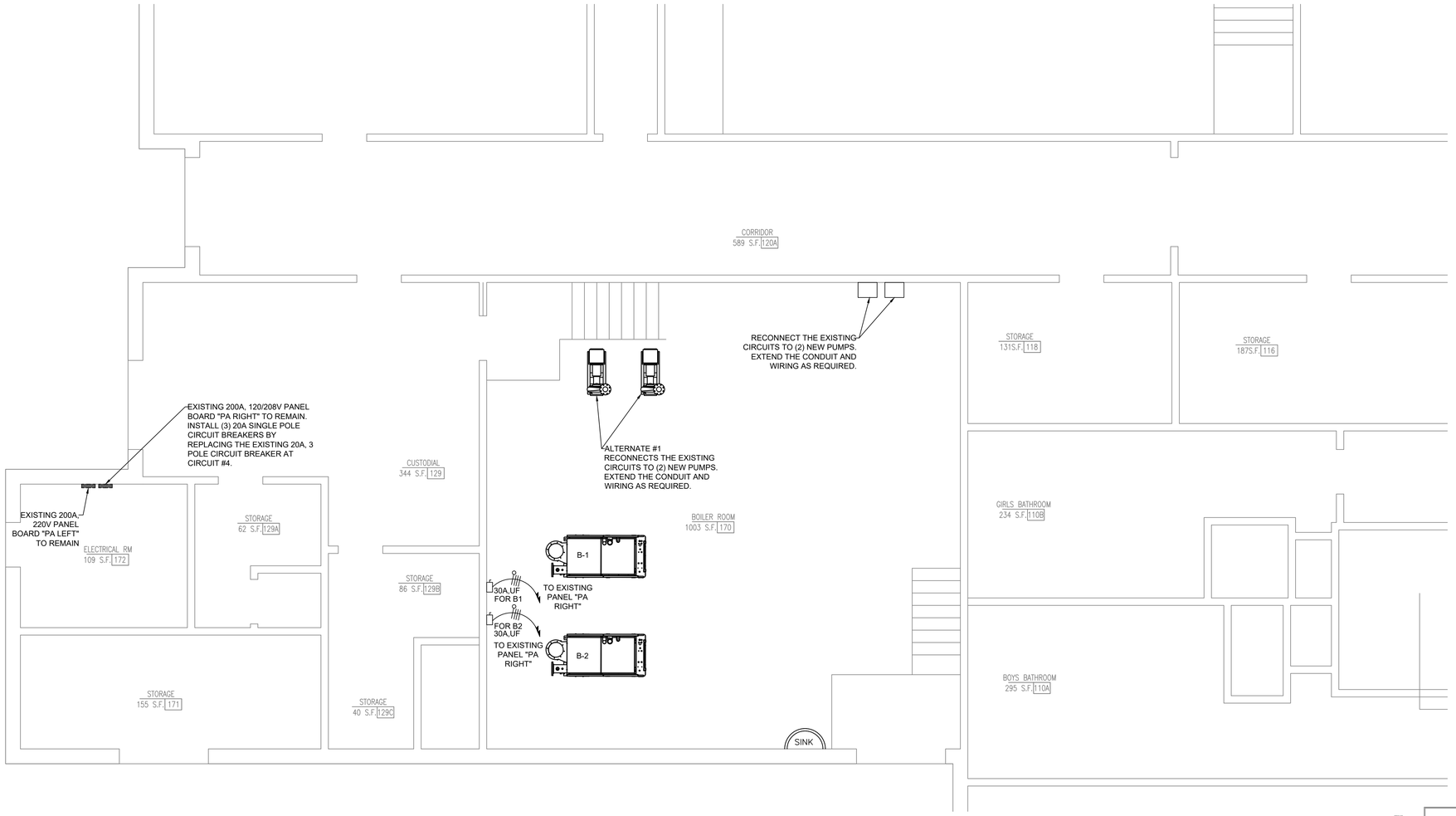

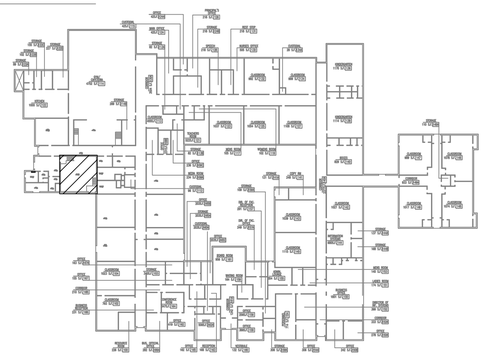

KEY PLAN

1 ELECTRICAL BOILER ROOM PLAN - NEW WORK

SCALE: 1/4" = 1'- 0"

PLAN NORTH

0 1/2 1
IF THIS BAR DOES NOT MEASURE 1", THEN DRAWING IS NOT TO FULL SCALE

No.	Date	Revisions
1	05/31/24	BIDDING DOCUMENTS

STATE OF NEW YORK · SAMIUL HAQUE · 091658 · LICENSED PROFESSIONAL ENGINEER
REG. EXP DATE: 04-30-27

Drawn by	AWF
Checked by	SH
Project No.	44023
Scale	AS SHOWN
Date	05/31/2024

Mechanical & Electrical Engineer: GREENMAN PEDERSEN, INC
2 EXECUTIVE BOULEVARD, SUITE 202, SUFFERN, NY 10901

Structural Engineer:

NORTH ROCKLAND HIGH SCHOOL EXTENSION BOILER REPLACEMENT

HIGH SCHOOL EXT SED# 05-02-01-06-0-007-016

65 Chapel Street, Garnerville, NY 10923

COUNTY OF ROCKLAND

MICHAEL SHILALE ARCHITECTS, L.L.P.
140 Park Avenue New City, NY 10956 Tel 845-709-8200
www.shilale.com

© COPYRIGHT, MICHAEL SHILALE ARCHITECTS, ALL RIGHTS RESERVED.

Drawing Title
ELECTRICAL INSTALLATION PLAN

Drawing No.
E-101

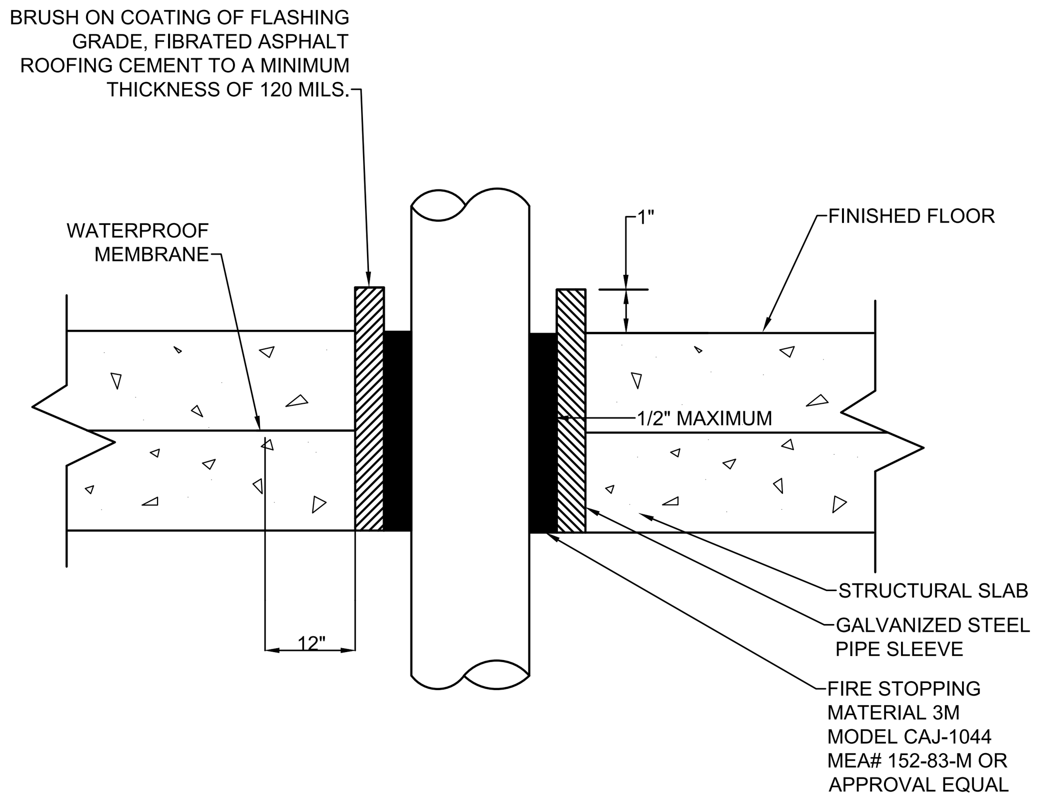

1 CONDUIT PENETRATION WATERPROOF SLAB
SCALE: NONE

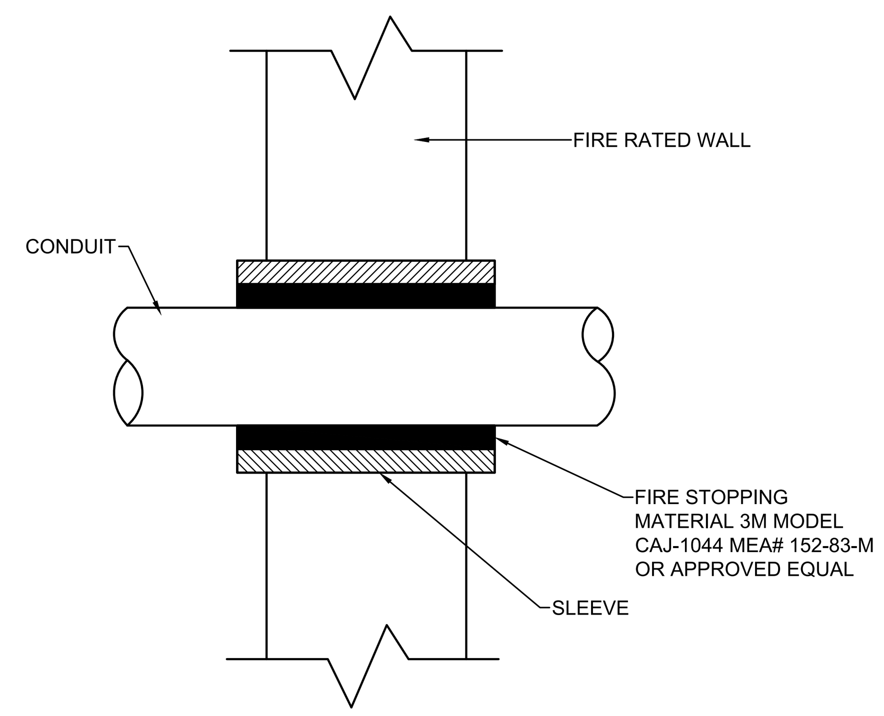

2 CONDUIT PENETRATION THRU FIRE RATED WALL
SCALE: NONE

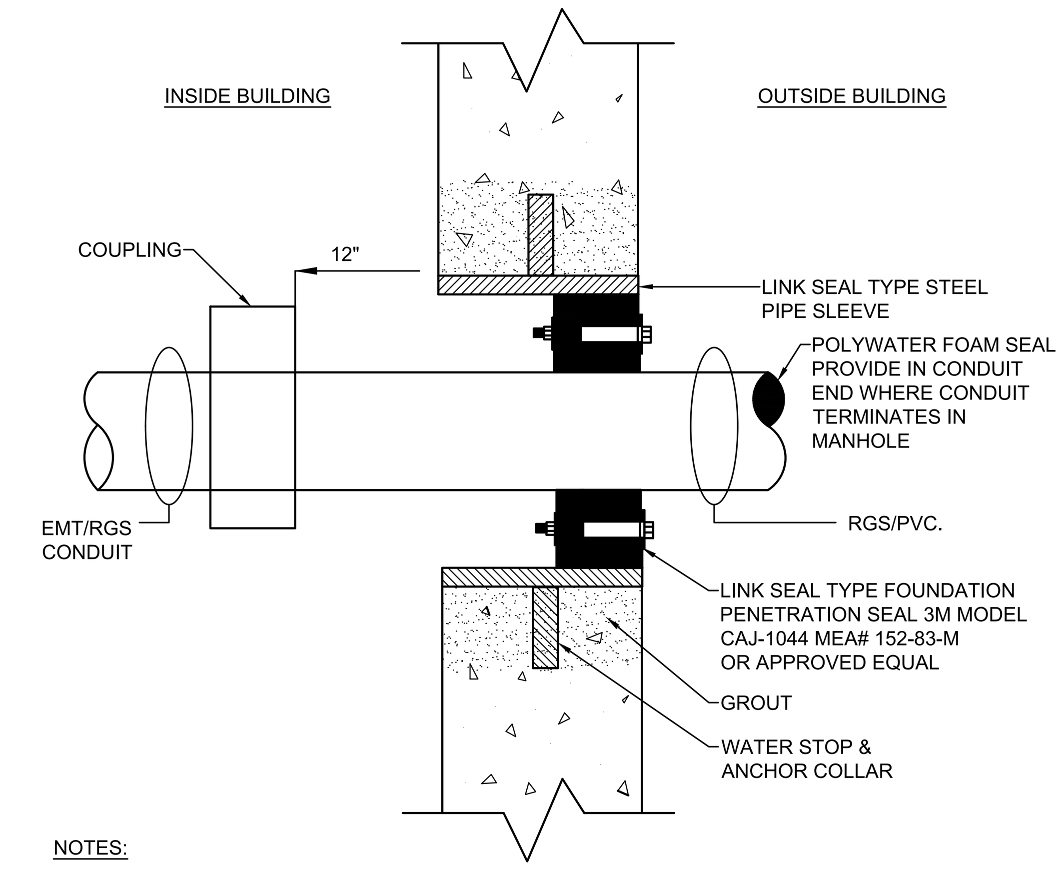

NOTES:

1. PROVIDE COUPLING AT EXTERIOR WHEN TRANSITIONING FROM PVC TO EMT/RGS.
2. ALL OPENINGS IN THE BUILDING WALLS FOR THE ENTRANCE OF CONDUITS SHALL BE MADE BY THE USE OF SLEEVES, WHICH SHALL BE GROUTED IN PLACE, WATERPROOFED UTILIZING " LINK-SEAL" TYPE GASKETING AND VERMIN-PROOFED BY AN APPROVED SEALING COMPOUND EXTENDING 3" INSIDE MOUTH OF CONDUIT. SPARE CONDUITS BEING INSTALLED NOW FOR FUTURE INCOMING SERVICE SHALL BE PLUGGED AND WATERTIGHT.
3. CONTRACTOR IS REQUIRED TO USE POLYWATER AFT AEROSOL FOAM SEALANT OR EQUIVALENT TO SEAL BOTH OPEN ENDS OF ELECTRICAL SERVICE CONDUITS (SEALING BETWEEN CONDUITS AND CABLES) ENTERING TO THE CELLAR ELECTRICAL ROOM FROM THE TRANSFORMER VAULT.

3 CONDUIT PENETRATION THRU FOUNDATION WALL
SCALE: NONE

No.	Date	Revisions
1	05/31/24	BIDDING DOCUMENTS

STATE OF NEW YORK — SAMIUL HAQUE — 091658 — LICENSED PROFESSIONAL ENGINEER
REG. EXP DATE: 04-30-27

Drawn by: AWF
Checked by: SH
Project No.: 44023
Scale: AS SHOWN
Date: 05/31/2024

Mechanical & Electrical Engineer: GREENMAN PEDERSEN, INC
Structural Engineer:

NORTH ROCKLAND HIGH SCHOOL EXTENSION BOILER REPLACEMENT
HIGH SCHOOL EXT SED# 05-02-01-06-0-007-016
COUNTY OF ROCKLAND

MICHAEL SHILALE ARCHITECTS, L.L.P.
140 Park Avenue New City, NY 10956 Tel 845-708-9200
www.shilale.com

© COPYRIGHT, MICHAEL SHILALE ARCHITECTS, ALL RIGHTS RESERVED.

Drawing Title: ELECTRICAL DETAILS
Drawing No. E-501