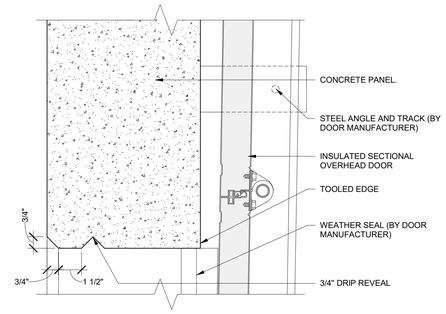

ARCO A33.20 2023.04.24

SECTION DOOR HEAD 4

SCALE: 3" = 1'-0"

NOTE: ALL EXTERIOR DOORS AND FRAMES TO BE GALVANIZED

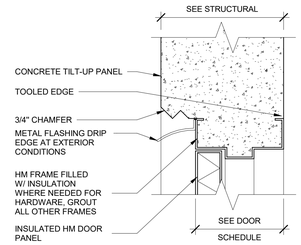

ARCO A33.01 2023.04.24

HM HEAD AT TILT 3

SCALE: 3" = 1'-0"

NOTE: ALL EXTERIOR DOORS AND FRAMES TO BE GALVANIZED

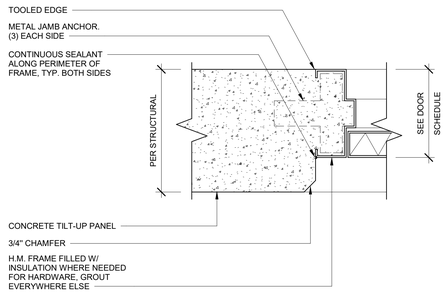

ARCO A33.02 2023.04.24

HM JAMB AT TILT 2

SCALE: 3" = 1'-0"

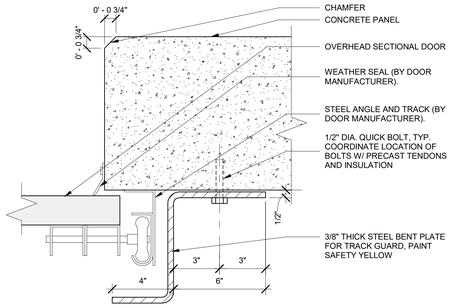

NOTE: INSTALL LATCH ON ALL OVERHEAD DOORS AT 5' - 0" AFF

ARCO A33.21 2023.04.24

SECTIONAL DOOR JAMB 5

SCALE: 3" = 1'-0"

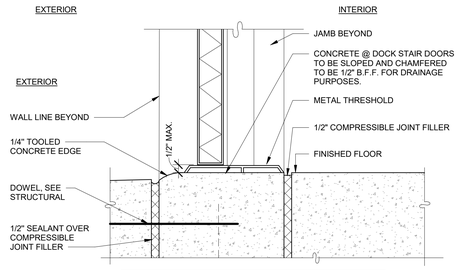

NOTE: ALL EXTERIOR DOORS AND FRAMES TO BE GALVANIZED

HOLLOW METAL DOOR SILL 1

SCALE: 3" = 1'-0"

DESIGNER / BUILDER

ARCO DESIGN/BUILD

44 SOUTH BROADWAY, SUITE 1003
WHITE PLAINS, NY 10601
P: 914.821.5535 F: 914.306.6010

ADB | DESIGN SERVICES

PROJECT TITLE

ROCKLAND LOGISTICS CENTER BLDG 2

25 OLD MILL RD. SUFFERN, NY 10901

OWNER
BROOKFIELD PROPERTIES
1 MEADOWLANDS PLAZA SUITE 802
EAST RUTHERFORD, NJ 07073

ARCHITECT
ADB / DESIGN SERVICES LLC
44 SOUTH BROADWAY, SUITE 1003
WHITE PLAINS, NY 10601

CIVIL ENGINEER
DYNAMIC ENGINEERING CONSULTANTS
1904 MAIN STREET
LAKE COMO, NJ 07719

STRUCTURAL ENGINEER
ADB STRUCTURAL ENGINEERING
325 S. ALABAMA ST, SUITE 200
INDIANAPOLIS, IN 46204

MECHANICAL ENGINEER
NATIONAL DESIGN BUILD SERVICES
11840 BORMAN DRIVE
MARYLAND HEIGHTS, MO 63146

ELECTRICAL ENGINEER
FXB ENGINEERING
5 CHRISTY DRIVE, SUITE 307
CHADDS FORD, PA 19317

PLUMBING ENGINEER
MCCARTHY ENGINEERING
2500 E HIGH STREET, SUITE 630
POTTSTOWN, PA 19464

FIRE PROTECTION ENGINEER
S.A. COMUNALE
2900 NEWPARK DRIVE
BARBERTON, OH 44203

SEAL

JOSEPH V. DIGIORGIO | NY: 042948

KEY PLAN

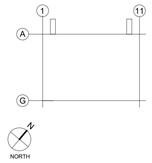

SUBMITTALS

NO.	DATE	DESCRIPTION
	02.09.2024	ISSUE FOR PERMIT

PROJECT NO. AS397-22 | NY154

DRAWN BY ADB

SHEET TITLE

DOOR DETAILS

SHEET NO.

A8.33

PRINTED ARCH E1 30" x 42" 3/5/2024 8:24:50 AM