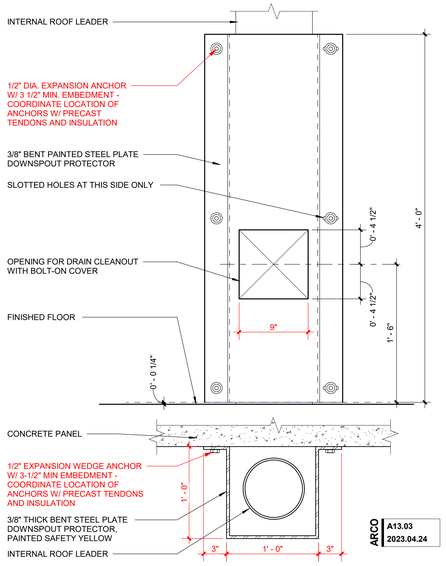

INTERIOR ROOF DRAIN LEADER GUARD (13)

SCALE: 1 1/2" = 1'-0"

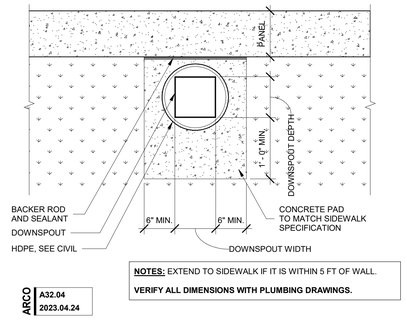

NOTES: EXTEND TO SIDEWALK IF IT IS WITHIN 5 FT OF WALL.

VERIFY ALL DIMENSIONS WITH PLUMBING DRAWINGS.

DOWNSPOUT AT CONCRETE PAD (9)

SCALE: 1" = 1'-0"

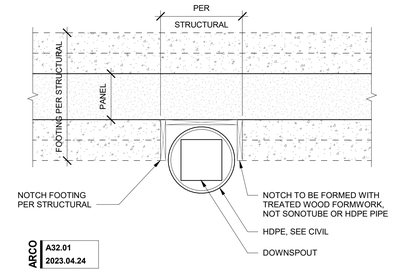

DOWNSPOUT PLAN AT FOOTING (6)

SCALE: 1" = 1'-0"

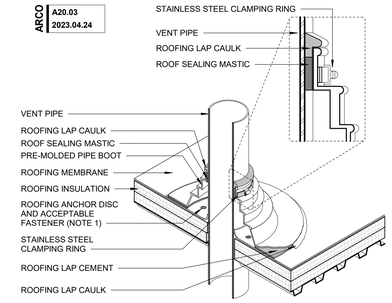

NOTES:
1. WITH MECHANICALLY FASTENED SPEC, MEMBRANE MUST BE MECHANICALLY ATTACHED WITH T.P.O. ANCHOR DISC WITH ACCEPTABLE FASTENERS (6" [150mm] CENTERS AROUND PIPE VENT)
2. DO NOT OVERLAP THE FLANGES FROM ADJACENT PIPE FLASHING.
3. ANY SEAM UNDER BOOT FLANGE TO BE TREATED AS T-JOINT

PIPE VENT (3)

SCALE: 1" = 1'-0"

NOTE: SEE PLUMBING DRAWINGS FOR ADDITIONAL DETAILS

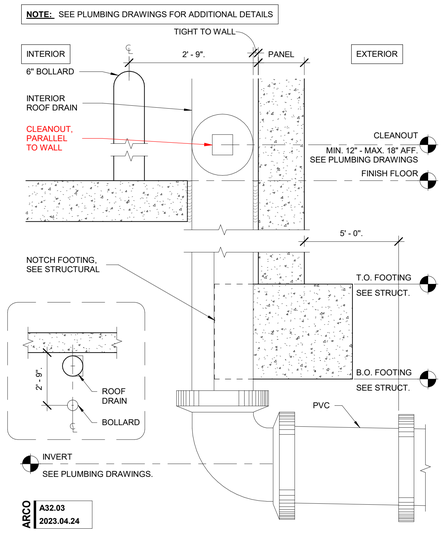

ROOF DRAIN SECTION AT FOOTING (8)

SCALE: 1" = 1'-0"

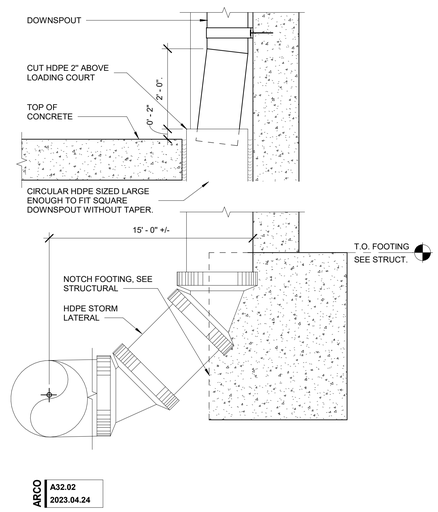

DOWNSPOUT SECTION AT FOOTING (5)

SCALE: 1" = 1'-0"

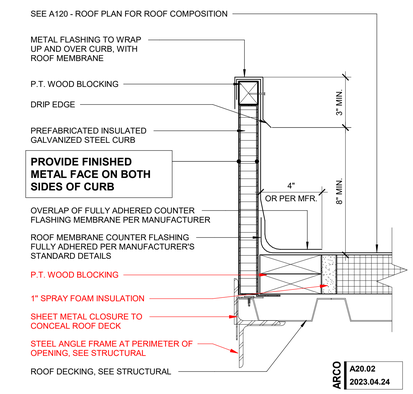

NOTES:
1. STAGGER JOINTS ON MULTIPLE LAYERS OF INSULATION
2. REFER TO STRUCTURAL FOR DECK ORIENTATION AND STRUCTURAL SUPPORT
3. ALL STAINLESS STEEL FASTENERS INTO WOOD BLOCKING
4. INSTALL PER MANUFACTURERS RECOMMENDATIONS

ROOF MECHANICAL CURB (2)

SCALE: 3" = 1'-0"

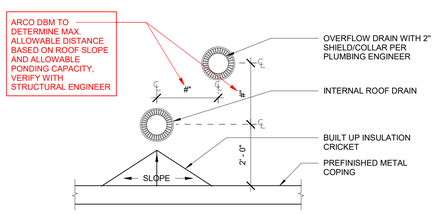

NOTE: COORDINATE LOCATION OF INTERNAL ROOF DRAIN WITH STRUCTURAL

ARCO A21.03 2023.04.24

ROOF DRAIN W/ OVERFLOW DRAIN (11)

SCALE: 1/2" = 1'-0"

NOTE: ONLY REQUIRED IF CLOSER THAN 10' TO EDGE OF ROOF

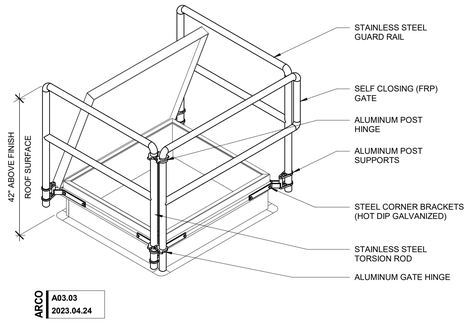

ROOF HATCH GUARDRAIL (7)

SCALE: 1 1/2" = 1'-0"

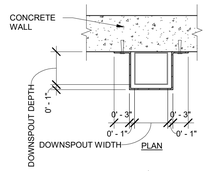

NOTE:
VERIFY ALL DIMENSIONS WITH PLUMBING DRAWINGS.
* NOT REQUIRED WHEN PROTECTED BY DOCK SHELTERS
FIELD VERIFY DIMENSIONS PRIOR TO FABRICATION

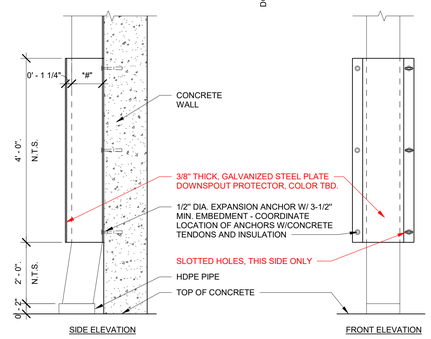

DOWNSPOUT GUARD - SINGLE (1)

SCALE: 1" = 1'-0"

INTERNAL ROOF DRAIN SECTION (10)

SCALE: 1 1/2" = 1'-0"

DESIGNER / BUILDER
ARCO DESIGN/BUILD
44 SOUTH BROADWAY, SUITE 1003
WHITE PLAINS, NY 10601
P: 914.821.5535 F: 914.306.6010

ADB | DESIGN SERVICES

PROJECT TITLE

ROCKLAND LOGISTICS CENTER BLDG 3

25 OLD MILL RD. SUFFERN, NY 10901

OWNER
BROOKFIELD PROPERTIES
1 MEADOWLANDS PLAZA SUITE 802
EAST RUTHERFORD, NJ 07073

ARCHITECT
ADB / DESIGN SERVICES LLC
44 SOUTH BROADWAY, SUITE 1003
WHITE PLAINS, NY 10601

CIVIL ENGINEER
DYNAMIC ENGINEERING CONSULTANTS
1904 MAIN STREET
LAKE COMO, NJ 07719

STRUCTURAL ENGINEER
ADB STRUCTURAL ENGINEERING
325 S. ALABAMA ST, SUITE 200
INDIANAPOLIS, IN 46204

MECHANICAL ENGINEER
NATIONAL DESIGN BUILD SERVICES
11840 BORMAN DRIVE
MARYLAND HEIGHTS, MO 63146

ELECTRICAL ENGINEER
FXB ENGINEERING
5 CHRISTY DRIVE, SUITE 307
CHADDS FORD, PA 19317

PLUMBING ENGINEER
MCCARTHY ENGINEERING
2500 E HIGH STREET, SUITE 630
POTTSTOWN, PA 19464

FIRE PROTECTION ENGINEER
S.A. COMUNALE
2900 NEWPARK DRIVE
BARBERTON, OH 44203

SEAL

JOSEPH V. DIGIORGIO | NY: 042948

KEY PLAN

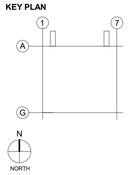

SUBMITTALS

NO.	DATE	DESCRIPTION
	02.09.2024	ISSUE FOR PERMIT

PROJECT NO.	DRAWN BY
AS397-22 | NY154	ADB

SHEET TITLE

ROOF DETAILS

SHEET NO.

A8.20

PRINTED ARCH E1 30" X 42" 2/9/2024 8:41:05 AM