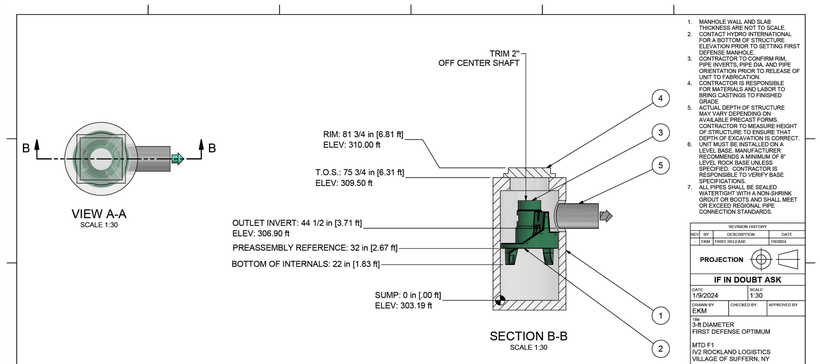

1. MANHOLE WALL AND SLAB THICKNESS ARE NOT TO SCALE.
2. CONTACT HYDRO INTERNATIONAL FOR A BOTTOM OF STRUCTURE ELEVATION PRIOR TO SETTING FIRST DEFENSE MANHOLE.
3. CONTRACTOR TO CONFIRM RIM, PIPE INVERTS, PIPE DIA. AND PIPE ORIENTATION PRIOR TO RELEASE OF UNIT TO FABRICATION.
4. CONTRACTOR IS RESPONSIBLE FOR MATERIALS AND LABOR TO BRING CASTINGS TO FINISHED GRADE.
5. ACTUAL DEPTH OF STRUCTURE MAY VARY DEPENDING ON AVAILABLE PRECAST FORMS. CONTRACTOR TO MEASURE HEIGHT OF STRUCTURE TO ENSURE THAT DEPTH OF EXCAVATION IS CORRECT.
6. UNIT MUST BE INSTALLED ON A LEVEL BASE. MANUFACTURER RECOMMENDS A MINIMUM OF 6" LEVEL ROCK BASE UNLESS SPECIFIED. CONTRACTOR IS RESPONSIBLE TO VERIFY BASE SPECIFICATIONS.
7. ALL PIPES SHALL BE SEALED WATERTIGHT WITH A NON-SHRINK GROUT OR BOOTS AND SHALL MEET OR EXCEED REGIONAL PIPE CONNECTION STANDARDS.

REVISION HISTORY

REV'Z	BY	DESCRIPTION	DATE
	EKM	FIRST RELEASE	1/9/2024

PROJECTION

IF IN DOUBT ASK

DATE:	SCALE:
1/9/2024	1:30

DRAWN BY:	CHECKED BY:	APPROVED BY:
EKM		

Title:
5-R DIAMETER
FIRST DEFENSE OPTIMUM

MTD F1
IV2 ROCKLAND LOGISTICS
VILLAGE OF SUFFERN, NY

Patent: www.hydro-int.com/patents

Hydro International
hydro-int.com

©2023 HYDRO INTERNATIONAL

WEIGHT: | MATERIAL:

STOCK NUMBER: 1

DRAWING NO.: 24_12_0026-38FDO-1

SHEET SIZE: B | SHEET: 1 OF 1 | Rev:

CAPACITIES:
1. PEAK HYDRAULIC FLOW: 15.0 cfs (424 l/s)
2. SEDIMENT STORAGE CAPACITY: 0.4 cu. yd. (0.3 cu. m.)
3. MAXIMUM INLET/OUTLET PIPE DIAMETERS: 18 in. (450 mm)

PRODUCT SPECIFICATIONS:
A. The treatment system shall use an induced vortex to separate pollutants from stormwater runoff.
B. The treatment system shall fit within the limits of excavation (area and depth) as shown in the project plans and will not exceed the dimensions for the design flow rates specified herein.
C. The treatment system shall convey the Peak On-line Flow Rates of up to 15 cfs without causing upstream surcharge conditions.
D. The treatment system shall be capable of capturing and retaining fine silt and sand size particles.
E. Unit shall conform to HS20-44 load ratings.

PARTS LIST

ITEM	QTY	SIZE (in)	DESCRIPTION	TYPE
1	1	36	I.D. PRECAST MANHOLE	
2	1		LEDGER SUPPORT	
3	1		SEPARATION MODULE	
4	1	24	FRAME AND GRATE (SQUARE)	
5	1	15	OUTLET PIPE (BY OTHERS)	HDPE

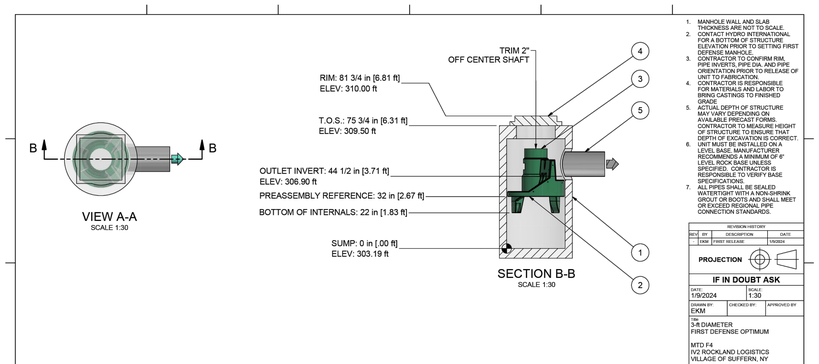

1. MANHOLE WALL AND SLAB THICKNESS ARE NOT TO SCALE.
2. CONTACT HYDRO INTERNATIONAL FOR A BOTTOM OF STRUCTURE ELEVATION PRIOR TO SETTING FIRST DEFENSE MANHOLE.
3. CONTRACTOR TO CONFIRM RIM, PIPE INVERTS, PIPE DIA. AND PIPE ORIENTATION PRIOR TO RELEASE OF UNIT TO FABRICATION.
4. CONTRACTOR IS RESPONSIBLE FOR MATERIALS AND LABOR TO BRING CASTINGS TO FINISHED GRADE.
5. ACTUAL DEPTH OF STRUCTURE MAY VARY DEPENDING ON AVAILABLE PRECAST FORMS. CONTRACTOR TO MEASURE HEIGHT OF STRUCTURE TO ENSURE THAT DEPTH OF EXCAVATION IS CORRECT.
6. UNIT MUST BE INSTALLED ON A LEVEL BASE. MANUFACTURER RECOMMENDS A MINIMUM OF 6" LEVEL ROCK BASE UNLESS SPECIFIED. CONTRACTOR IS RESPONSIBLE TO VERIFY BASE SPECIFICATIONS.
7. ALL PIPES SHALL BE SEALED WATERTIGHT WITH A NON-SHRINK GROUT OR BOOTS AND SHALL MEET OR EXCEED REGIONAL PIPE CONNECTION STANDARDS.

REVISION HISTORY

REV'Z	BY	DESCRIPTION	DATE
	EKM	FIRST RELEASE	1/9/2024

PROJECTION

IF IN DOUBT ASK

DATE:	SCALE:
1/9/2024	1:30

DRAWN BY:	CHECKED BY:	APPROVED BY:
EKM		

Title:
5-R DIAMETER
FIRST DEFENSE OPTIMUM

MTD F4
IV2 ROCKLAND LOGISTICS
VILLAGE OF SUFFERN, NY

Patent: www.hydro-int.com/patents

Hydro International
hydro-int.com

©2023 HYDRO INTERNATIONAL

WEIGHT: | MATERIAL:

STOCK NUMBER: 4

DRAWING NO.: 24_12_0026-38FDO-4

SHEET SIZE: B | SHEET: 1 OF 1 | Rev:

CAPACITIES:
1. PEAK HYDRAULIC FLOW: 15.0 cfs (424 l/s)
2. SEDIMENT STORAGE CAPACITY: 0.4 cu. yd. (0.3 cu. m.)
3. MAXIMUM INLET/OUTLET PIPE DIAMETERS: 18 in. (450 mm)

PRODUCT SPECIFICATIONS:
A. The treatment system shall use an induced vortex to separate pollutants from stormwater runoff.
B. The treatment system shall fit within the limits of excavation (area and depth) as shown in the project plans and will not exceed the dimensions for the design flow rates specified herein.
C. The treatment system shall convey the Peak On-line Flow Rates of up to 15 cfs without causing upstream surcharge conditions.
D. The treatment system shall be capable of capturing and retaining fine silt and sand size particles.
E. Unit shall conform to HS20-44 load ratings.

PARTS LIST

ITEM	QTY	SIZE (in)	DESCRIPTION	TYPE
1	1	36	I.D. PRECAST MANHOLE	
2	1		LEDGER SUPPORT	
3	1		SEPARATION MODULE	
4	1	24	FRAME AND GRATE (SQUARE)	
5	1	15	OUTLET PIPE (BY OTHERS)	HDPE

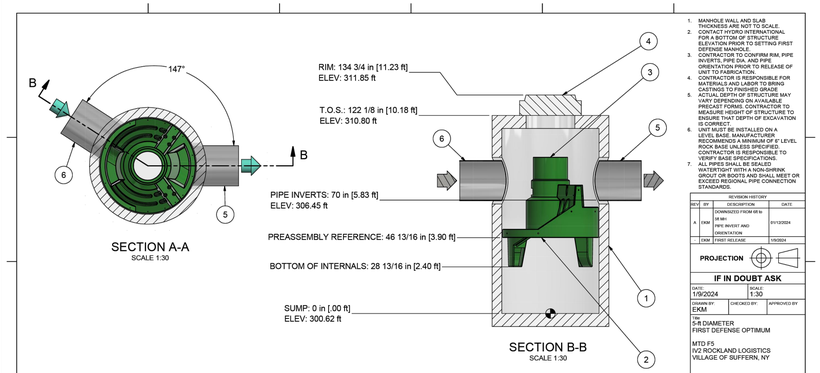

1. MANHOLE WALL AND SLAB THICKNESS ARE NOT TO SCALE.
2. CONTACT HYDRO INTERNATIONAL FOR A BOTTOM OF STRUCTURE ELEVATION PRIOR TO SETTING FIRST DEFENSE MANHOLE.
3. CONTRACTOR TO CONFIRM RIM, PIPE INVERTS, PIPE DIA. AND PIPE ORIENTATION PRIOR TO RELEASE OF UNIT TO FABRICATION.
4. CONTRACTOR IS RESPONSIBLE FOR MATERIALS AND LABOR TO BRING CASTINGS TO FINISHED GRADE.
5. ACTUAL DEPTH OF STRUCTURE MAY VARY DEPENDING ON AVAILABLE PRECAST FORMS. CONTRACTOR TO MEASURE HEIGHT OF STRUCTURE TO ENSURE THAT DEPTH OF EXCAVATION IS CORRECT.
6. UNIT MUST BE INSTALLED ON A LEVEL BASE. MANUFACTURER RECOMMENDS A MINIMUM OF 6" LEVEL ROCK BASE UNLESS SPECIFIED. CONTRACTOR IS RESPONSIBLE TO VERIFY BASE SPECIFICATIONS.
7. ALL PIPES SHALL BE SEALED WATERTIGHT WITH A NON-SHRINK GROUT OR BOOTS AND SHALL MEET OR EXCEED REGIONAL PIPE CONNECTION STANDARDS.

REVISION HISTORY

REV'Z	BY	DESCRIPTION	DATE
A	EKM	DOWNSIZED FROM 68 to 48 MH PIPE INVERT AND ORIENTATION	01/12/2024
	EKM	FIRST RELEASE	1/9/2024

PROJECTION

IF IN DOUBT ASK

DATE:	SCALE:
1/9/2024	1:30

DRAWN BY:	CHECKED BY:	APPROVED BY:
EKM		

Title:
5-R DIAMETER
FIRST DEFENSE OPTIMUM

MTD F5
IV2 ROCKLAND LOGISTICS
VILLAGE OF SUFFERN, NY

Patent: www.hydro-int.com/patents

Hydro International
hydro-int.com

©2023 HYDRO INTERNATIONAL

WEIGHT: | MATERIAL:

STOCK NUMBER: 5

DRAWING NO.: 24_12_0026-58FDO-5

SHEET SIZE: B | SHEET: 1 OF 1 | Rev: -

PROPOSED PIPE INVERTS

CAPACITIES:
1. PEAK HYDRAULIC FLOW: 20.0 cfs (566 l/s)
2. SEDIMENT STORAGE CAPACITY: 1.1 cu. yd. (0.8 cu. m.)
3. MAXIMUM INLET/OUTLET PIPE DIAMETERS: 24 in. (600 mm)

PRODUCT SPECIFICATIONS:
A. The treatment system shall use an induced vortex to separate pollutants from stormwater runoff.
B. The treatment system shall fit within the limits of excavation (area and depth) as shown in the project plans and will not exceed the dimensions for the design flow rates specified herein.
C. The treatment system shall convey the Peak On-line Flow Rates of up to 20 cfs without causing upstream surcharge conditions.
D. The treatment system shall be capable of capturing and retaining fine silt and sand size particles.
E. Unit shall conform to HS20-44 load ratings.

PARTS LIST

ITEM	QTY	SIZE (in)	DESCRIPTION	TYPE
1	1	60	I.D. PRECAST MANHOLE	
2	1		LEDGER SUPPORT	
3	1		SEPARATION MODULE	
4	1	30	FRAME AND COVER (ROUND)	
5	1	24	OUTLET PIPE (BY OTHERS)	HDPE
6	1	24	INLET PIPE (BY OTHERS)	HDPE

THIS PLAN SET IS FOR PERMITTING PURPOSES ONLY AND MAY NOT BE USED FOR CONSTRUCTION

Rev.	Date	Comments	By
5	01/17/24	REV. PER PLANNING BOARD SUBMISSION	CAM
4	06/13/23	REV. PER VILLAGE AND COUNTY COMMENTS	CAM
3	05/24/23	REV. PER ACOE COMMENTS	CMB/MK
2	09/01/22	REV. PER TOWNSHIP AND COUNTY COMMENTS	ALPH
1	04/25/22	REV. PER CLIENT AND COUNTY COMMENTS	CAM

DYNAMIC ENGINEERING
LAND DEVELOPMENT CONSULTING • PERMITTING • GEOTECHNICAL • ENVIRONMENTAL • SURVEY • PLANNING & ZONING
1904 Main Street
Lake Como, NJ 07719
T: 732.974.0198
F: 732.974.3521
www.dynamicec.com
Offices conveniently located in:
Lake Como, New Jersey T: 732.974.0198 | Chester, New Jersey T: 908.879.5229 | Newark, New Jersey T: 973.755.7200 | Toms River, New Jersey T: 732.678.0000
Allen, Texas T: 972.534.2100 | Austin, Texas T:512.646.2646 | Houston, Texas T: 281.789.6400 | Delray Beach, Florida T: 561.921.8570
Newtown, Pennsylvania T: 267.685.0276 | Philadelphia, Pennsylvania T: 215.233.4888 | Bethlehem, Pennsylvania T: 610.598.4400

TITLE:
HYDRO INTERNATIONAL DETAILS

PROJECT: **IV2 ROCKLAND LOGISTICS, LLC**
PROPOSED INDUSTRIAL PARK AT 25 OLD MILL ROAD
SECTION 55.22, BLOCK 1, LOT 1; SECTION 55.37, BLOCK 1, LOT 31
OLD MILL ROAD AND HEMION ROAD (CR 93)
VILLAGE OF SUFFERN, ROCKLAND COUNTY, NEW YORK

JOB No: 3709-99-004	DATE: 12/17/2021
DRAWN BY: UV	SCALE: (H) NOT TO (V) SCALE
DESIGNED BY: JMS	SHEET No:
CHECKED BY: JMS	127
CHECKED BY: ZAK	OF 132
	Rev. # 5

ZACHARY A. KAMM
PROFESSIONAL ENGINEER
NEW YORK LICENSE No. 107071

JOSHUA M. SCHMALD
STATE OF NEW YORK
LICENSED PROFESSIONAL ENGINEER
PROFESSIONAL ENGINEER
NEW YORK LICENSE No. 076639

811 PROTECT YOURSELF
ALL STATES REQUIRE NOTIFICATION OF EXCAVATION, DEMOLITION, OR OPERATION CAPABLE TO DISTURB THE EARTH'S SURFACE ANYWHERE IN ANY STATE
Dig right below Call before you dig.
FOR STATE SPECIFIC DIRECT PHONE NUMBERS VISIT: WWW.CALL811.COM

Plotted: 01/17/24 – 12:05 PM, By: areyes, – Product Ver: 24.3s (LMS Tech)
File: P:\DECPO PROJECTS\3709 Brookfield Properties\99-004 Suffern NY\Dwg\Site Plans\D3709990040SD5.dwg, ---> 127 HYDRO INTERNATIONAL DETAILS

COPYRIGHT © 2024 – DYNAMIC ENGINEERING CONSULTANTS, PC – ALL RIGHTS RESERVED