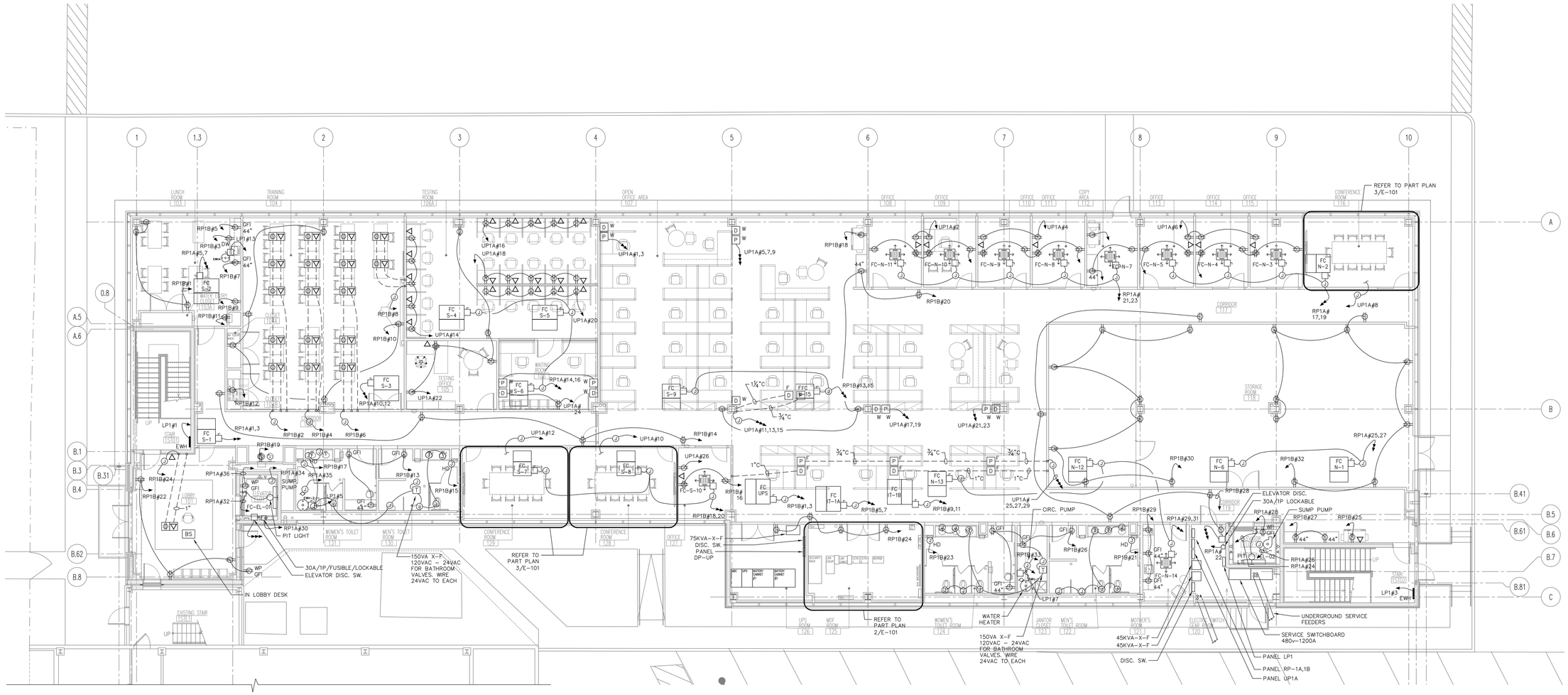

1 1st FLOOR PLAN
SCALE: 1/8" = 1'-0"

KEY PLAN
SCALE: N.T.S.

ELECTRICAL LEGEND

- 20A DUPLEX 125V RECEPTACLE (IVORY)
- GFI 20A GFCI DUPLEX RECEPTACLE 125V MOUNTED 48" AFF TO TOP OF BOX (IVORY)
- 20A QUAD RECEPTACLE 125V
- J JUNCTION BOX
- RECEPTACLE-SPECIAL
- ¾" CONDUIT & SINGLE GANG BOX. CONDUIT STUBBED ABOVE HUNG CEILING, PROVIDE NYLON BUSHING & PULL CORD
- ▽/▼ ¾" CONDUIT & (2) GANG BOX. CONDUIT STUBBED ABOVE HUNG CEILING. PROVIDE NYLON BUSHING & PULL CORD.
- W D FLUSH WALL MOUNTED 2-GANG BOX WITH 1" EMPTY CONDUIT STUBBED INTO HUNG CEILING, PROVIDE 1" GROMMETED FACEPLATE FOR CONNECTION TO FURNITURE SYSTEM (VOICE/DATA). MOUNTED 4" AFF
- W P FLUSH WALL MOUNTED JUNCTION BOX FOR POWER CONNECTION TO FURNITURE SYSTEM. PROVIDE LIQUID TITE CONDUIT FOR CONNECTION, SIZE AND LENGTH AS REQUIRED. MOUNTED 4" AFF FINAL CONNECTION BY CONTRACTOR
- F D FLUSH FLOOR BOX FOR "ON GRADE" APPLICATION FOR CONNECTION TO FURNITURE SYSTEM DATA. PROVIDE LIQUID TITE CONNECTION TO FURNITURE FINAL CONNECTIONS BY OTHERS.
- F P FLUSH FLOOR BOX FOR "ON GRADE" APPLICATION FOR CONNECTION TO FURNITURE SYSTEM POWER. PROVIDE 1¼" LIQUID TITE CONNECTION TO FURNITURE AND FINAL CONNECTIONS.
- FBI FLUSH FLOOR BOX, MULTI-USE BOX WITH (1) DUPLEX RECEPTACLE WIRE MOLD EVOLUTION 4/5 BOX WITH FLUSH COVER AND FLOOR INSERT #EFB45CTXX
- DISCONNECT SWITCH
- COMBINATION STARTER/DISCONNECT SWITCH
- COMBINATION STARTER/DISCONNECT SWITCH WITH OCP
- C ELECTRICAL CONTACTOR
- T/C TIME CLOCK
- SINGLE POLE HOME RUN TO PANEL. TYPICAL BRANCH CIRCUIT.
- TWO POLE HOME RUN TO PANEL. TYPICAL 2 POLE BRANCH CIRCUIT OR 2 POLE APPLIANCE CIRCUIT
- THREE POLE HOME RUN TO PANEL. TYPICAL 3 PHASE BRANCH CIRCUIT OR 3 PHASE FEEDER.
- TOGGLE SWITCH
- F FLUSH MOUNTED COMBINATION POWER/DATA FLOOR BOX, ONE 20A DUPLEX AND DATA/TEL PORTS, WIREMOLD MODEL RP7C1CBK, RPSFB-OG FOR ON GRADE APPLICATION, BLACK FINISH.
- P FLUSH MOUNTED COMBINATION POWER/DATA POKE THRU, ONE 20A DUPLEX AND DATA/TEL PORTS, WIREMOLD MODEL RC4ATCBK, BLACK FINISH.
- D POKE THRU FOR DATA FURN FEED
- P POKE THRU FOR POWER FURN FEED. PROVIDE LIQUID TITE WHIP AND CONNECTION TO FURNITURE
- BS AREA OF REFUGE BASE STATION
- CB AREA OF REFUGE CALL BOXES

ELECTRICAL ABBREVIATIONS

AB.	ABOVE	LC	LIGHTING CONTACTOR
AC	ALTERNATING CURRENT	LP	LIGHTING PANELBOARD
A/C	AIR CONDITIONING	LPS	LOW PRESSURE SODIUM
AFF	ABOVE FINISH FLOOR	LTG.	LIGHTING
AFG	ABOVE FINISH GRADE	LV	LOW VOLTAGE
AMP, A	AMPERE	MAX	MAXIMUM
APPROX.	APPROXIMATE	MDP	MAIN DISTRIBUTION PANELBOARD
ARCH.	ARCHITECT	MDS	MAIN DISTRIBUTION SWTCHBOARD
AUX.	AUXILIARY	MECH.	MECHANICAL
BFG	BELOW FINISH GRADE	MFR.	MANUFACTURER
BLDG.	BUILDING	MH	MANHOLE
BKR.	BREAKER	MIN.	MINIMUM
BRD	BOARD	MT.	MOUNT
BTM.	BOTTOM	MTG.	MOUNTING
C	CONDUIT	MTL.	METAL
CAB.	CABINET	MTR	MOTOR
CAT.	CATEGORY	N.C.	NORMALLY CLOSED
CC	CENTER TO CENTER	NEC	NATIONAL ELECTRICAL CODE
CKT.	CIRCUIT	N.I.C.	NOT IN CONTRACT
CL	CENTER LINE	NL	NIGHT LIGHT
CLG.	CEILING	N.O.	NORMALLY OPEN
COORD.	COORDINATE	NTS	NOT TO SCALE
CONC.	CONCRETE	P.B.	PUSHBUTTON
CONN.	CONNECT	P.C.	PLUMBING CONTRACTOR
CONT.	CONTINUATION	PH	PHASE
CONTR.	CONTRACTOR	PLBG.	PLUMBING
CU	COPPER	PNL	PANEL
DC	DIRECT CURRENT	PP	POWER PANELBOARD
DIA.	DIAMETER	PRI	PRIMARY
DISC.	DISCONNECT	PROG	PROGRAM
DN	DOWN	PVC	POLYVINYLCHLORIDE
DP	DISTRIBUTION PANELBOARD	PWR	POWER
DS	DISTRIBUTION SWITCHGEAR	RC	REMOTE CONTROL
DWGS.	DRAWINGS	REC	RECEPTACLE
E.C.	ELECTRICAL CONTRACTOR	REQD.	REQUIRED
EF	EXHAUST FAN	RM	ROOM
ELEC.	ELECTRIC	SDP	SUB DISTRIBUTION PANELBOARD
EM	EMERGENCY	SPD	PANEL MOUNTED SURGE PROTECTION DEVICE
EQUIP.	EQUIPMENT		
EWC	ELECTRIC WATER COOLER	SEC.	SECONDARY
EX.	EXISTING	SHT.	SHEET
FA	FIRE ALARM	SPEC.	SPECIFICATION
FIXT.	FIXTURE	SPKLR.	SPRINKLER
FLR.	FLOOR	STAT	THERMOSTAT
FLUOR.	FLUORESCENT	STP	SHIELDED TWISTED PAIR (CABLE)
F.P.C.	FIRE PROTECTION CONTRACTOR	SW	SWITCH
FU	FUSE, FUSED, OR FUSIBLE	SWBD.	SWITCHBOARD
FURN.	FURNISH	SYS.	SYSTEM
FUT.	FUTURE	TC	TIME CLOCK
G.C.	GENERAL CONTRACTOR	T.C.C.	TEMP. CONTROL CONTRACTOR
GEN.	GENERAL	TEL.	TELEPHONE OR TELECOMMUNICATION
GFI	GROUND FAULT INTERRUPTER	TERM.	TERMINAL OR TERMINATE
GND	GROUND	TFMR.	TRANSFORMER
H.C.	HVAC OR HEATING CONTRACTOR	TTB	TELEPHONE TERMINAL BOARD
HID	HIGH INTENSITY DISCHARGE	TTC	TELEPHONE TERMINAL CABINET
HPS	HIGH PRESSURE SODIUM	TYP.	TYPICAL
HT	HEIGHT	UPS	UNINTERRUPTIBLE POWER SYSTEM
HTG.	HEATING	V	VOLT
HZ	HERTZ	VA	VOLT AMP
J.B.	JUNCTION BOX	VAR	VOLT AMPERE REACTIVE
KV.	KILOVOLT	W	WATT OR WIRE
KVA	KILOVOLT AMPERE	WG	WIREGUARD
KW	KILOWATT	WP	WEATHERPROOF
		W/	WITH
		W/O	WITHOUT

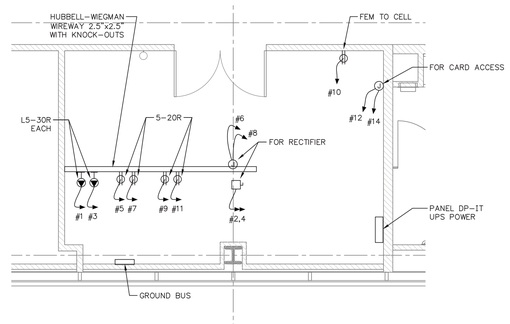

2 MDF ROOM PART PLAN
SCALE: 1/4" = 1'-0"

ALL CIRCUITS SHOWN TO PANEL DP-IT
REFER TO PANEL SCHEDULE

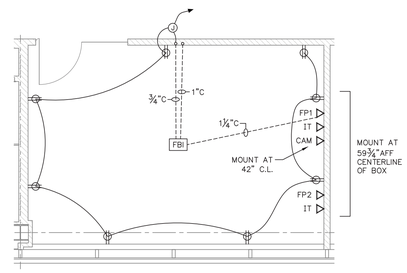

3 TYPICAL MEDIUM CONF. ROOM PART PLAN-TYPICAL ROOMS 116,128,129,218,219
SCALE: 1/4" = 1'-0"

FP1 ▽ 1¼"STUB INTO CEILING, 1¼"CONDUIT TO FLOOR BOX
FP2 ▽ 1¼"STUB INTO CEILING
CAM ▽ 1¼"STUB INTO CEILING

1	ISSUED FOR BUILDING DEPARTMENT FILING & BIDDING	04-28-2025

ORANGE AND ROCKLAND UTILITIES, INC.
SPRING VALLEY NEW YORK

Omdex Incorporated Consulting Engineers
21 Cross Avenue
Midland Park, NJ 07432-1851
(201) 444-0753 FAX (201) 444-0839

STATE OF NEW YORK · BRIAN W. PASECHNICK · NO. 91385 · LICENSED PROFESSIONAL ENGINEER
Brian W. Pasechnick, PE
NY #91385

SNS ARCHITECTS & ENGINEERS
tel: 201.573.1787
fax:201.573.0808
www.sns-arch-eng.com
DRAFTED: MJR
CHECKED: -
PROJ. NO: 5593
DATE: 08.11.2024

ENGINEERING REVIEW

DEPT.	SIGNATURE	DATE
CIVIL		
METERING		
RELAY		
TRANS. & SUB.		

DWN | DES | CHKD
DESIGN REVIEW | DATE

Lorin J. Sonenshine, AIA
Cert./Lic. No. NY 018401

APPROVED
DATE
☐ INFORMATION
☐ COMMENTS
☐ BID
☐ CONSTRUCTION
☐ _____

ELECTRICAL FIRST FLOOR PLAN - POWER

SVOC NEW OFFICE ADDITION
TAX MAP ID 56.52-1-2
390 WEST ROUTE 59
VILLAGE OF SPRING VALLEY
TOWN OF RAMAPO
ROCKLAND COUNTY, NEW YORK

SCALE	FILE NO.	DRAWING NUMBER	SHEET	REV.
AS NOTED		E-101	63 OF 95	

VILLAGE OF SPRING VALLEY ROCKLAND COUNTY, NEW YORK

SNS Architects & Engineers, PC
ONE PARAGON DRIVE . MONTVALE . NEW JERSEY . 07645
- John Lignos, AIA
- Lorin J. Sonenshine, AIA
- Steven Napolitano, PE, PP
- Robert Nocella, AIA

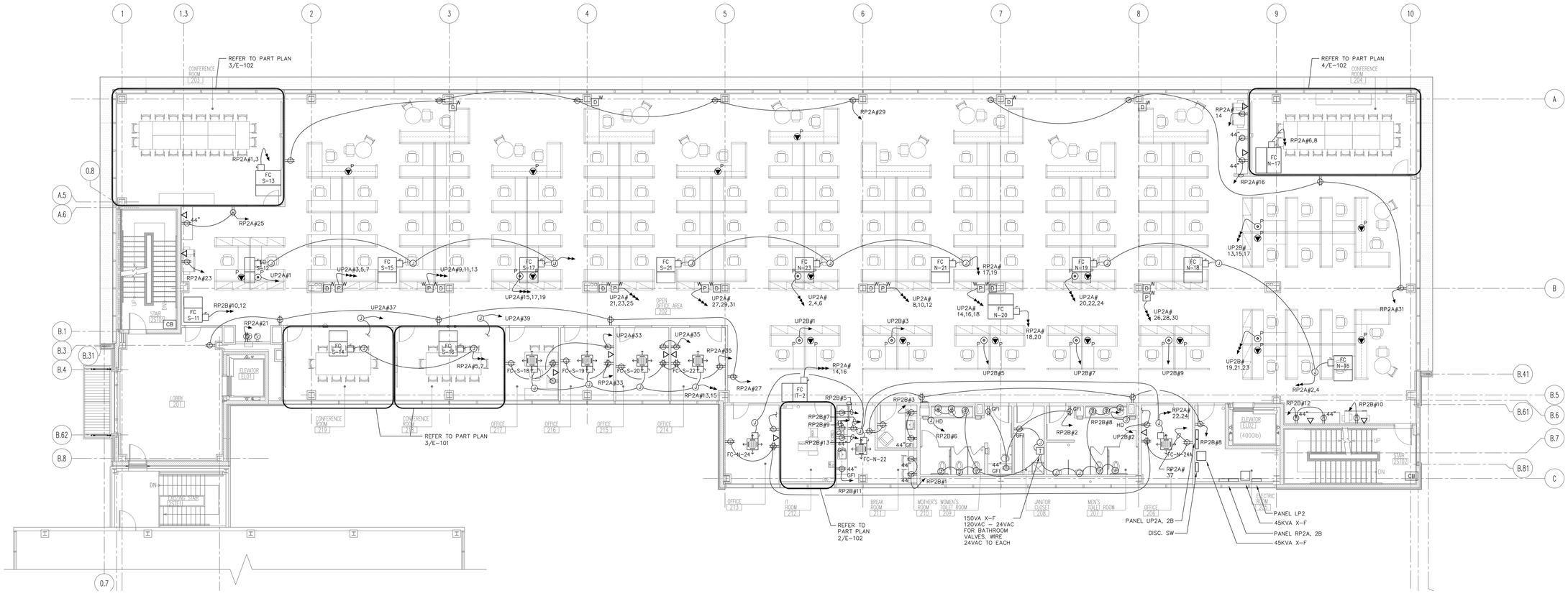

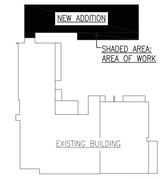

KEY PLAN
SCALE: N.T.S.

1 2nd FLOOR PLAN
SCALE: 1/8" = 1'-0"

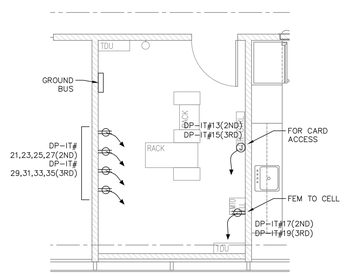

2 TYPICAL 2ND & 3RD FLOOR IT ROOM PART PLAN
SCALE: 1/4" = 1'-0"

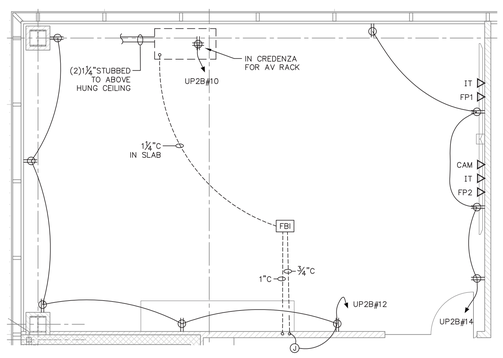

3 CONF. ROOM 203 PART PLAN
SCALE: 1/4" = 1'-0"

FP1 ▽ 1¼"STUB INTO CEILING, 1¼"CONDUIT TO FLOOR BOX
FP2 ▽ 1¼"STUB INTO CEILING
CAM ▽ 1¼"STUB INTO CEILING

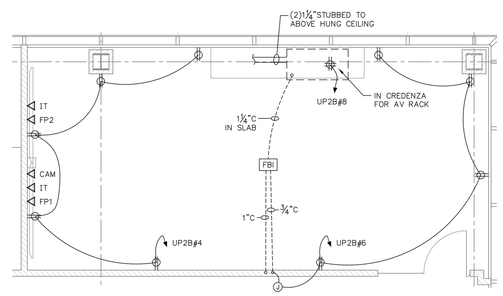

4 CONF. ROOM 204 PART PLAN
SCALE: 1/4" = 1'-0"

FP1 ▽ 1¼"STUB INTO CEILING, 1¼"CONDUIT TO FLOOR BOX
FP2 ▽ 1¼"STUB INTO CEILING
CAM ▽ 1¼"STUB INTO CEILING

1	ISSUED FOR BUILDING DEPARTMENT FILING & BIDDING	04-28-2025

ORANGE AND ROCKLAND UTILITIES, INC.
SPRING VALLEY NEW YORK

Omdex Incorporated Consulting Engineers
21 Cross Avenue
Midland Park, NJ 07432-1811
(201) 444-0753 FAX (201) 444-0839

STATE OF NEW YORK · BRIAN W. PASECHNICK · NO. 91385 · LICENSED PROFESSIONAL ENGINEER

Brian W. Pasechnick, PE
NY #91385

SNS ARCHITECTS & ENGINEERS
tel: 201.573.1767
fax:201.573.0808
www.sns-arch-eng.com

DRAFTED: MJR
CHECKED: –
PROJ. NO: 5593
DATE: 08.11.2024

Lorin J. Sonenshine, AIA
Cert./Lic. No. NY 018401

ENGINEERING REVIEW		
DEPT.	SIGNATURE	DATE
CIVIL		
METERING		
RELAY		
TRANS. & SUB.		

APPROVED
DATE
☐ INFORMATION
☐ COMMENTS
☐ BID
☐ CONSTRUCTION
☐ _____

ELECTRICAL SECOND FLOOR PLAN - POWER

SVOC NEW OFFICE ADDITION
TAX MAP ID 56.52-1-2
300 WEST ROUTE 59
VILLAGE OF SPRING VALLEY
TOWN OF RAMAPO
ROCKLAND COUNTY, NEW YORK

DWN	DES	CHKD
DESIGN REVIEW		DATE

SCALE	FILE NO.	DRAWING NUMBER	SHEET	REV.
AS NOTED		E-102	64 OF 95	

VILLAGE OF SPRING VALLEY — ROCKLAND COUNTY, NEW YORK

SNS Architects & Engineers, PC
ONE PARAGON DRIVE . MONTVALE . NEW JERSEY . 07645
John Lignos, AIA
Lorin J. Sonenshine, AIA
Steven Napolitano, PE, PP
Robert Nocella, AIA

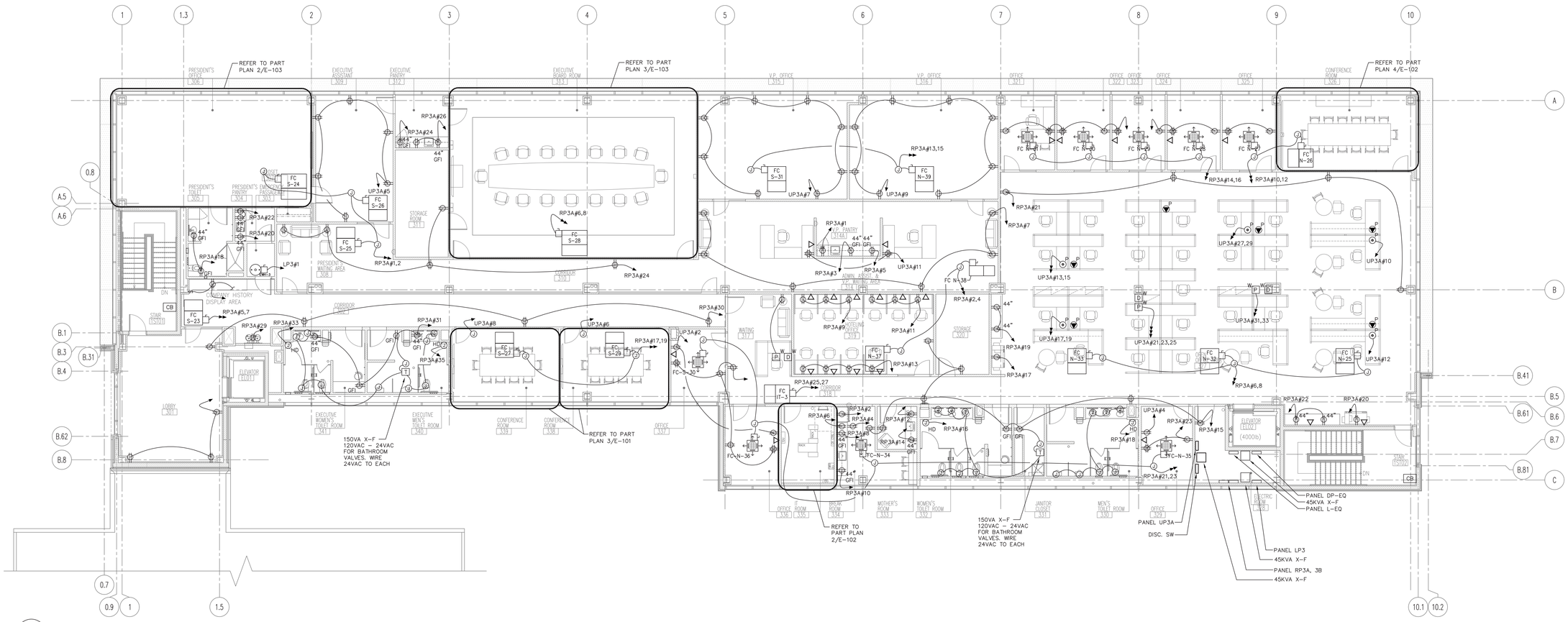

1 3rd FLOOR PLAN
SCALE: 1/8" = 1'-0"

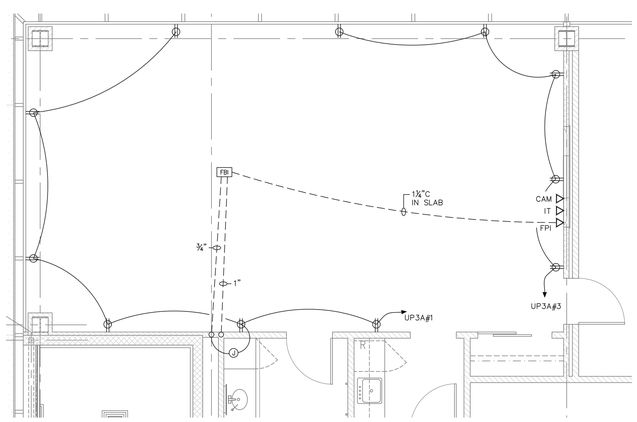

2 EXECUTIVE ROOM PART PLAN
SCALE: 1/4" = 1'-0"

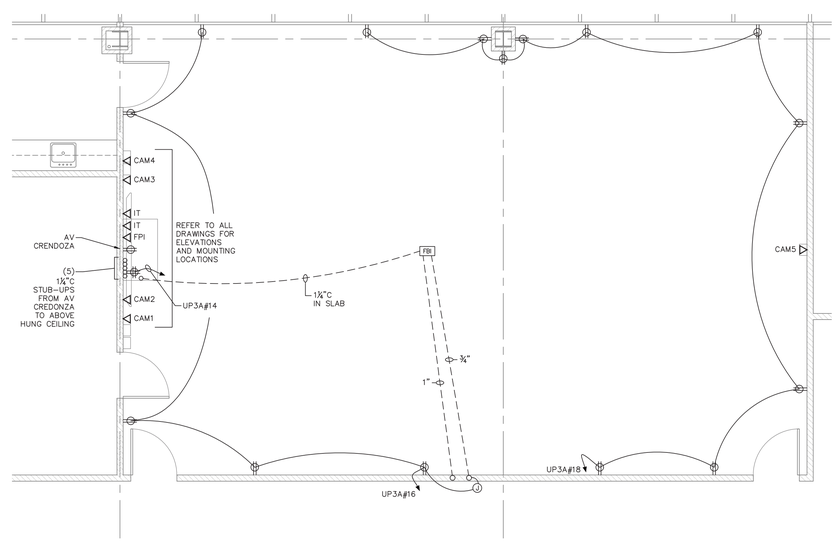

3 BOARD ROOM PART PLAN
SCALE: 1/4" = 1'-0"

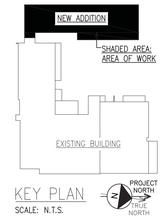

KEY PLAN
SCALE: N.T.S.

1	ISSUED FOR BUILDING DEPARTMENT FILING & BIDDING	04-28-2025

ORANGE AND ROCKLAND UTILITIES, INC.
SPRING VALLEY NEW YORK

Omdex Incorporated Consulting Engineers
21 Cross Avenue
Midland Park, NJ 07432-1851
(201) 444-0753 FAX (201) 444-0839

STATE OF NEW YORK · BRIAN W. PASECHNICK · 081385 · LICENSED PROFESSIONAL ENGINEER

Brian W. Pasechnick, PE
NY #081385

SNS ARCHITECTS & ENGINEERS
tel: 201.573.1767
fax:201.573.0808
www.sns-arch-eng.com
DRAFTED: MJR
CHECKED: –
PROJ. NO: 5593
DATE: 08.11.2024

Lorin J. Sonenshine, AIA
Cert./Lic. No. NY 018401

ENGINEERING REVIEW

DEPT.	SIGNATURE	DATE
CIVIL		
METERING		
RELAY		
TRANS. & SUB.		

OWN. DES. CHKD.
DESIGN REVIEW DATE

APPROVED DATE
☐ INFORMATION
☐ COMMENTS
☐ BID
☐ CONSTRUCTION
☐ _____

ELECTRICAL THIRD FLOOR PLAN - POWER

SVOC NEW OFFICE ADDITION
TAX MAP ID 56.52-1-2
390 WEST ROUTE 59
VILLAGE OF SPRING VALLEY
TOWN OF RAMAPO
ROCKLAND COUNTY, NEW YORK

SCALE	FILE NO.	DRAWING NUMBER	SHEET	REV.
AS NOTED		E-103	65 OF 95	

VILLAGE OF SPRING VALLEY ROCKLAND COUNTY, NEW YORK

SNS Architects & Engineers, PC
ONE PARAGON DRIVE . MONTVALE . NEW JERSEY . 07645
- John Lignos, AIA
- Lorin J. Sonenshine, AIA
- Steven Napolitano, PE, PP
- Robert Nocella, AIA

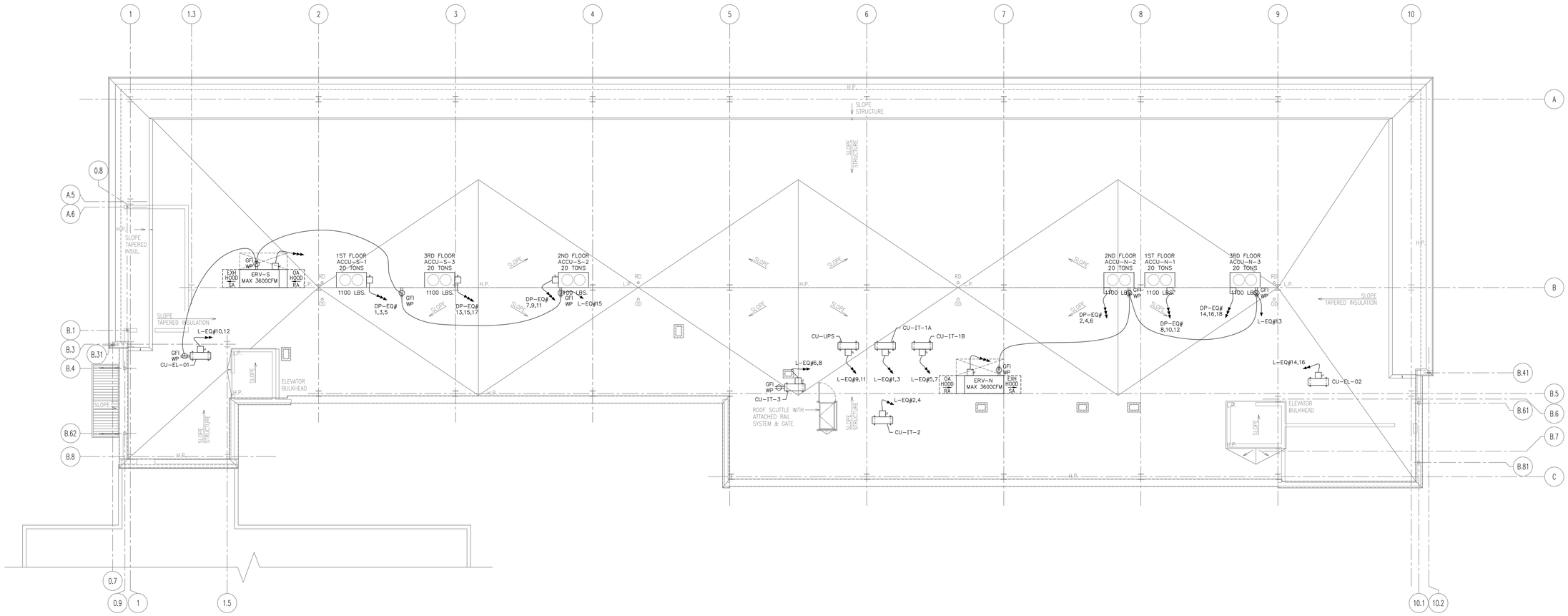

1 ROOF PLAN

SCALE: 1/8" = 1'-0"

NOTE: ALL WIRING SHALL RUN IN CEILING SPACE OF 3RD FLOOR. THERE SHALL BE NO HORIZONTAL RUNS ON ROOF.

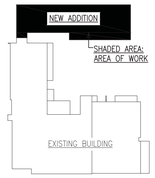

KEY PLAN

SCALE: N.T.S.

1	ISSUED FOR BUILDING DEPARTMENT FILING & BIDDING	04-28-2025

ORANGE AND ROCKLAND UTILITIES, INC.
SPRING VALLEY NEW YORK

Omdex Incorporated Consulting Engineers
21 Cross Avenue
Midland Park, NJ 07432-1811
(201) 444-0753 FAX (201) 444-0839

STATE OF NEW YORK · BRIAN W. PASECHNICK · LICENSED PROFESSIONAL ENGINEER · NO. 91385

Brian W. Pasechnick, PE
NY #91385

SNS ARCHITECTS & ENGINEERS
tel: 201.573.1767
fax:201.573.0808
www.sns-arch-eng.com

DRAFTED: MJR
CHECKED: –
PROJ. NO: 5593
DATE: 08.11.2024

Lorin J. Sonenshine, AIA
Cert./Lic. No. NY 018401

ENGINEERING REVIEW

DEPT.	SIGNATURE	DATE
CIVIL		
METERING		
RELAY		
TRANS. & SUB.		

DWN	DES	CHKD
DESIGN REVIEW		DATE

APPROVED
DATE
☐ INFORMATION
☐ COMMENTS
☐ BID
☐ CONSTRUCTION
☐ _____

ELECTRICAL ROOF PLAN

SVOC NEW OFFICE ADDITION
TAX MAP ID 56.52-1-2
290 WEST ROUTE 59
VILLAGE OF SPRING VALLEY
TOWN OF RAMAPO
ROCKLAND COUNTY, NEW YORK

SCALE	FILE NO.	DRAWING NUMBER	SHEET	REV.
AS NOTED		E-104	66 OF 95	

VILLAGE OF SPRING VALLEY ROCKLAND COUNTY, NEW YORK

SNS Architects & Engineers, PC
ONE PARAGON DRIVE . MONTVALE . NEW JERSEY . 07645

- John Lignos, AIA
- Lorin J. Sonenshine, AIA
- Steven Napolitano, PE, PP
- Robert Nocella, AIA

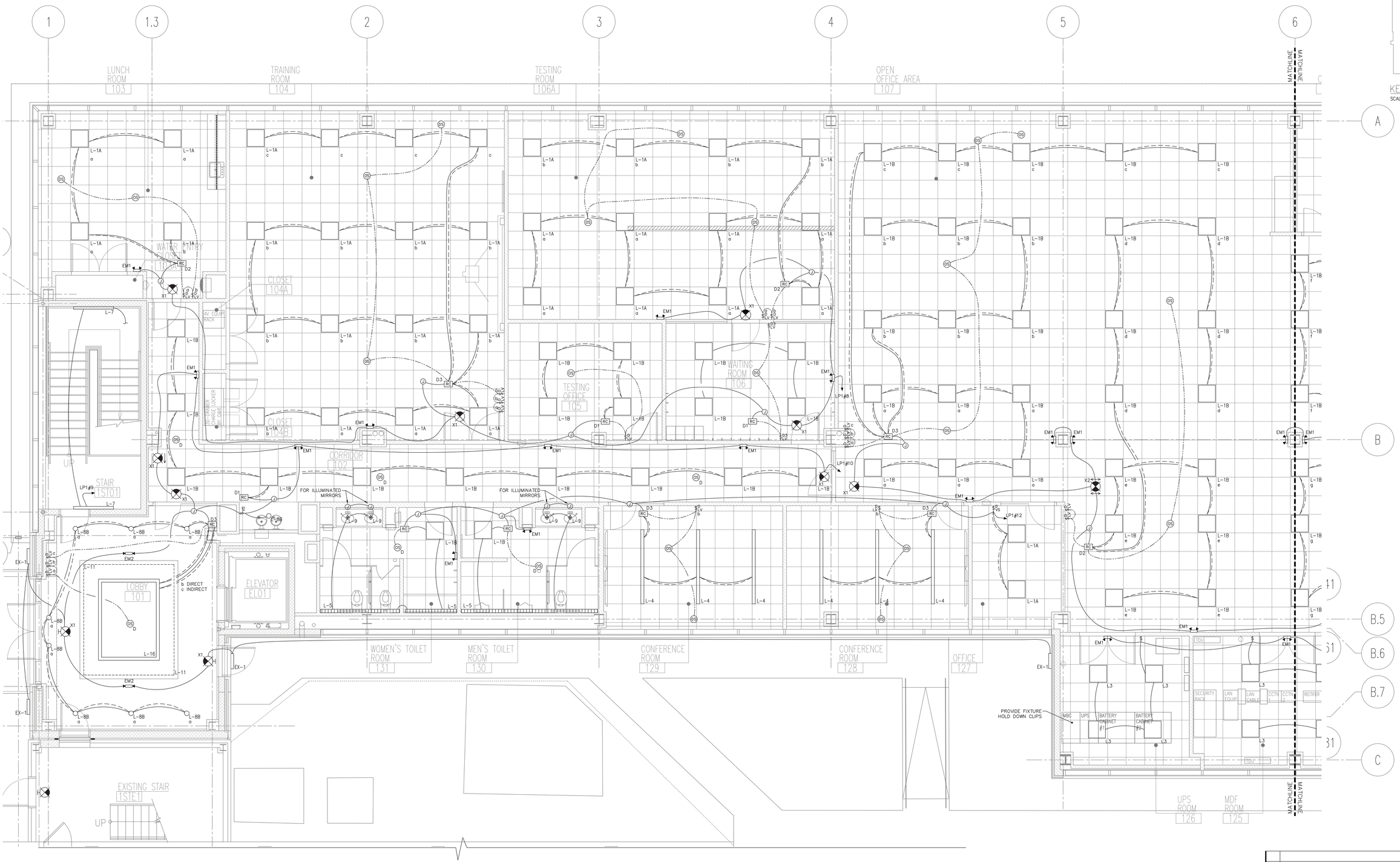

1 1st FLOOR PLAN
SCALE: 1/4" = 1'-0"

KEY PLAN
SCALE: N.T.S.

PROJECT NORTH
TRUE NORTH

1	ISSUED FOR BUILDING DEPARTMENT FILING & BIDDING	04-28-2025

ORANGE AND ROCKLAND UTILITIES, INC.
SPRING VALLEY NEW YORK

ELECTRICAL PARTIAL FIRST FLOOR PLAN - LIGHTING

SVOC NEW OFFICE ADDITION
TAX MAP ID 56.52-1-2
390 WEST ROUTE 59
VILLAGE OF SPRING VALLEY
TOWN OF RAMAPO
ROCKLAND COUNTY, NEW YORK

Omdex Incorporated Consulting Engineers
21 Cross Avenue
Midland Park, NJ 07432-1851
(201) 444-0753 FAX (201) 444-0839

STATE OF NEW YORK · BRIAN W. PASECHNICK · LICENSED PROFESSIONAL ENGINEER · NO. 91585

Brian W. Pasechnick, PE
NY #91585

SNS ARCHITECTS & ENGINEERS
tel: 201.573.1767
fax:201.573.0808
www.sns-arch-eng.com

DRAFTED: MJR
CHECKED: –
PROJ. NO: 5593
DATE: 08.11.2024

Lorin J. Sonenshine, AIA
Cert./Lic. No. NY 018401

ENGINEERING REVIEW

DEPT.	SIGNATURE	DATE
CIVIL		
METERING		
RELAY		
TRANS. & SUB		

DWN | DES | CHKD
DESIGN REVIEW | DATE

APPROVED | DATE
☐ INFORMATION
☐ COMMENTS
☐ BID
☐ CONSTRUCTION
☐ _____

SCALE	FILE NO.	DRAWING NUMBER	SHEET	REV.
AS NOTED		E-201A	67 OF 95	

VILLAGE OF SPRING VALLEY ROCKLAND COUNTY, NEW YORK

SNS Architects & Engineers, PC
ONE PARAGON DRIVE . MONTVALE . NEW JERSEY . 07645

- John Lignos, AIA
- Lorin J. Sonenshine, AIA
- Steven Napolitano, PE, PP
- Robert Nocella, AIA

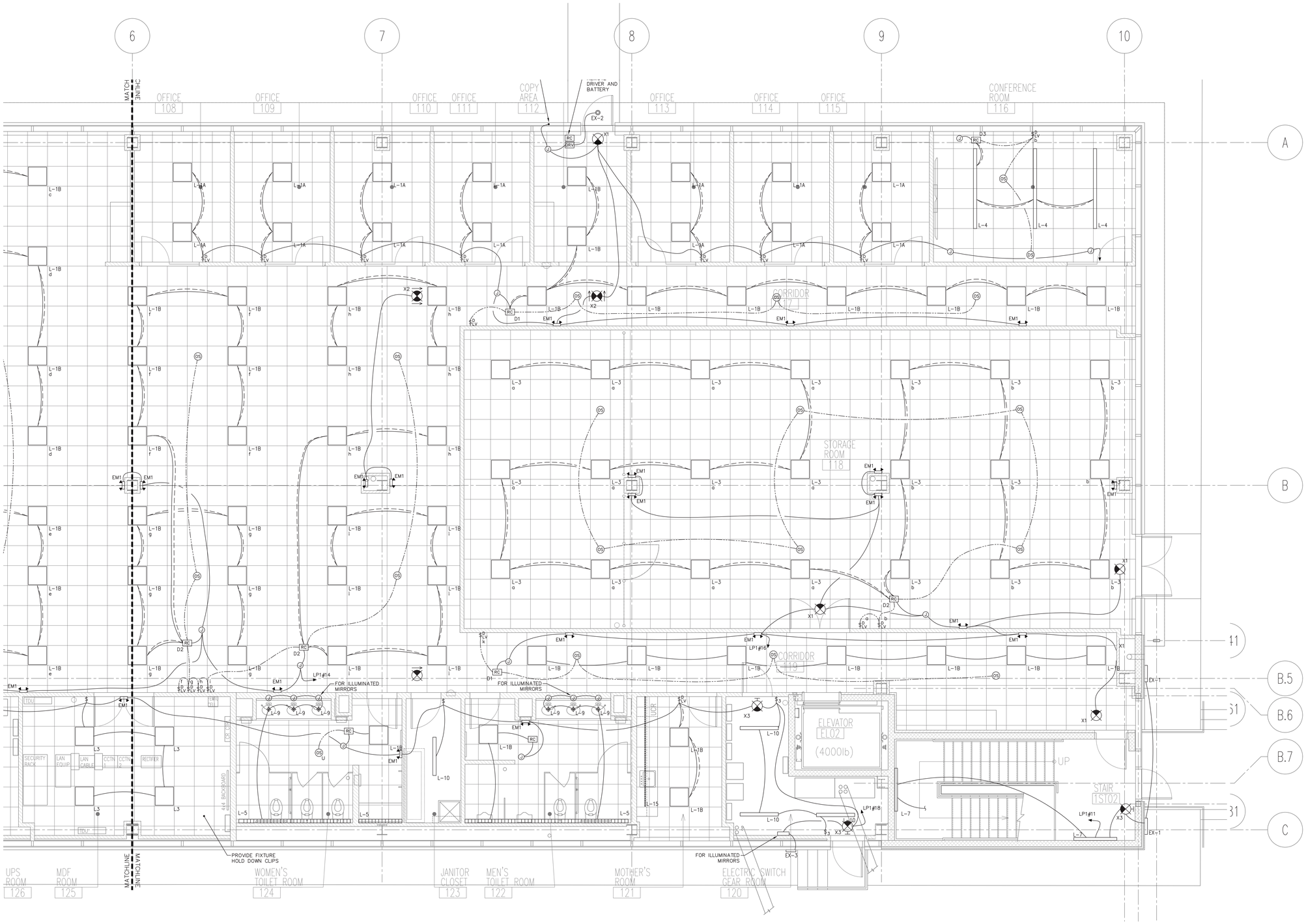

1 1st FLOOR PLAN
SCALE: 1/4" = 1'-0"

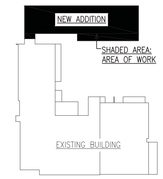

KEY PLAN
SCALE: N.T.S.

1	ISSUED FOR BUILDING DEPARTMENT FILING & BIDDING	04-28-2025

ORANGE AND ROCKLAND UTILITIES, INC.
SPRING VALLEY NEW YORK

ELECTRICAL PARTIAL FIRST FLOOR PLAN - LIGHTING

SVOC NEW OFFICE ADDITION
TAX MAP ID 56.52-1-2
390 WEST ROUTE 59
VILLAGE OF SPRING VALLEY
TOWN OF RAMAPO
ROCKLAND COUNTY, NEW YORK

Omdex Incorporated Consulting Engineers
21 Cross Avenue
Midland Park, NJ 07432-1851
(201) 444-0753 FAX (201) 444-0839

STATE OF NEW YORK · BRIAN W. PASECHNICK · NO. 81385 · LICENSED PROFESSIONAL ENGINEER

Brian W. Pasechnick, PE
NY #81385

SNS ARCHITECTS & ENGINEERS
tel: 201.573.1767
fax:201.573.0808
www.sns-arch-eng.com

DRAFTED: MJR
CHECKED: –
PROJ. NO: 5593
DATE: 08.11.2024

Lorin J. Sonenshine, AIA
Cert./Lic. No. NY 018401

ENGINEERING REVIEW		
DEPT.	SIGNATURE	DATE
CIVIL		
METERING		
RELAY		
TRANS. & SUB.		

APPROVED
DATE
☐ INFORMATION
☐ COMMENTS
☐ BID
☐ CONSTRUCTION
☐ _____

DWN	DES	CHKD
DESIGN REVIEW		DATE

SCALE	FILE NO.	DRAWING NUMBER	SHEET	REV.
AS NOTED		E-201B	68 OF 95	

VILLAGE OF SPRING VALLEY ROCKLAND COUNTY, NEW YORK

SNS Architects & Engineers, PC
ONE PARAGON DRIVE . MONTVALE . NEW JERSEY . 07645
John Lignos, AIA
Lorin J. Sonenshine, AIA
Steven Napolitano, PE, PP
Robert Nocella, AIA

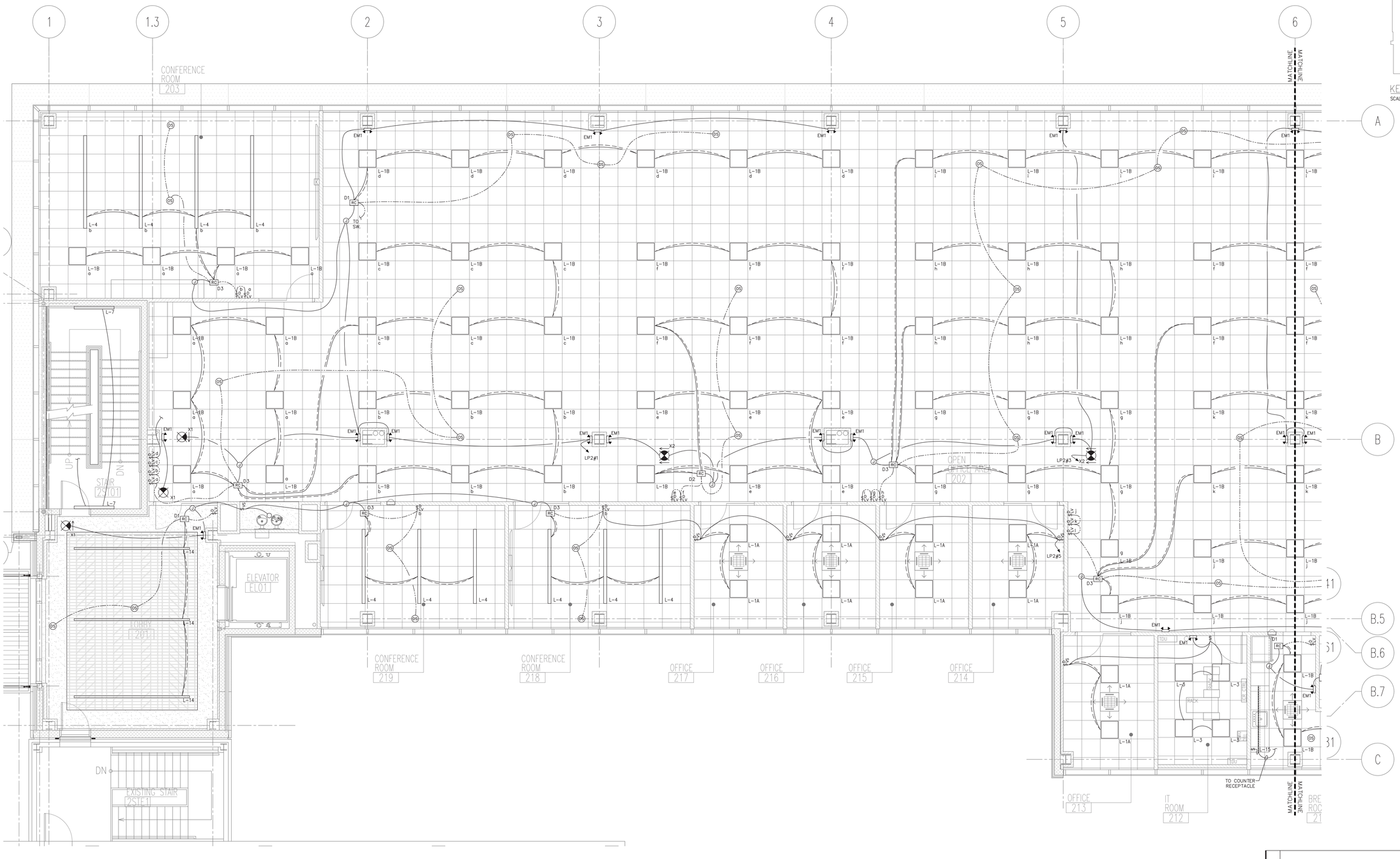

KEY PLAN
SCALE: N.T.S.

PROJECT NORTH
TRUE NORTH

1 2nd FLOOR PLAN
SCALE: 1/4" = 1'-0"

1	ISSUED FOR BUILDING DEPARTMENT FILING & BIDDING	04-28-2025

ORANGE AND ROCKLAND UTILITIES, INC.
SPRING VALLEY NEW YORK

Omdex Incorporated Consulting Engineers
21 Cross Avenue
Milford Park, NJ 07432-1851
(201) 444-0753 FAX (201) 444-0839

STATE OF NEW YORK · BRIAN W. PASECHNICK · LICENSED PROFESSIONAL ENGINEER · NO. 91385

Brian W. Pasechnick, PE
NY #91385

SNS ARCHITECTS & ENGINEERS
tel: 201.573.1767
fax:201.573.0808
www.sns-arch-eng.com

DRAFTED: MJR
CHECKED: –
PROJ. NO: 5593
DATE: 08.11.2024

Lorin J. Sonenshine, AIA
Cert./Lic. No. NY 018401

ENGINEERING REVIEW

DEPT.	SIGNATURE	DATE
CIVIL		
METERING		
RELAY		
TRANS. & SUB		

DWN. | DES | CHKD
DESIGN REVIEW | DATE

APPROVED
DATE
☐ INFORMATION
☐ COMMENTS
☐ BID
☐ CONSTRUCTION
☐ _____

ELECTRICAL PARTIAL SECOND FLOOR PLAN – LIGHTING

SVOC NEW OFFICE ADDITION
TAX MAP ID 56.52-1-2
200 WEST ROUTE 59
VILLAGE OF SPRING VALLEY
TOWN OF RAMAPO
ROCKLAND COUNTY, NEW YORK

SCALE	FILE NO.	DRAWING NUMBER	SHEET	REV.
AS NOTED		E-202A	69 OF 95	

VILLAGE OF SPRING VALLEY ROCKLAND COUNTY, NEW YORK

SNS Architects & Engineers, PC
ONE PARAGON DRIVE . MONTVALE . NEW JERSEY . 07645

- John Lignos, AIA
- Lorin J. Sonenshine, AIA
- Steven Napolitano, PE, PP
- Robert Nocella, AIA

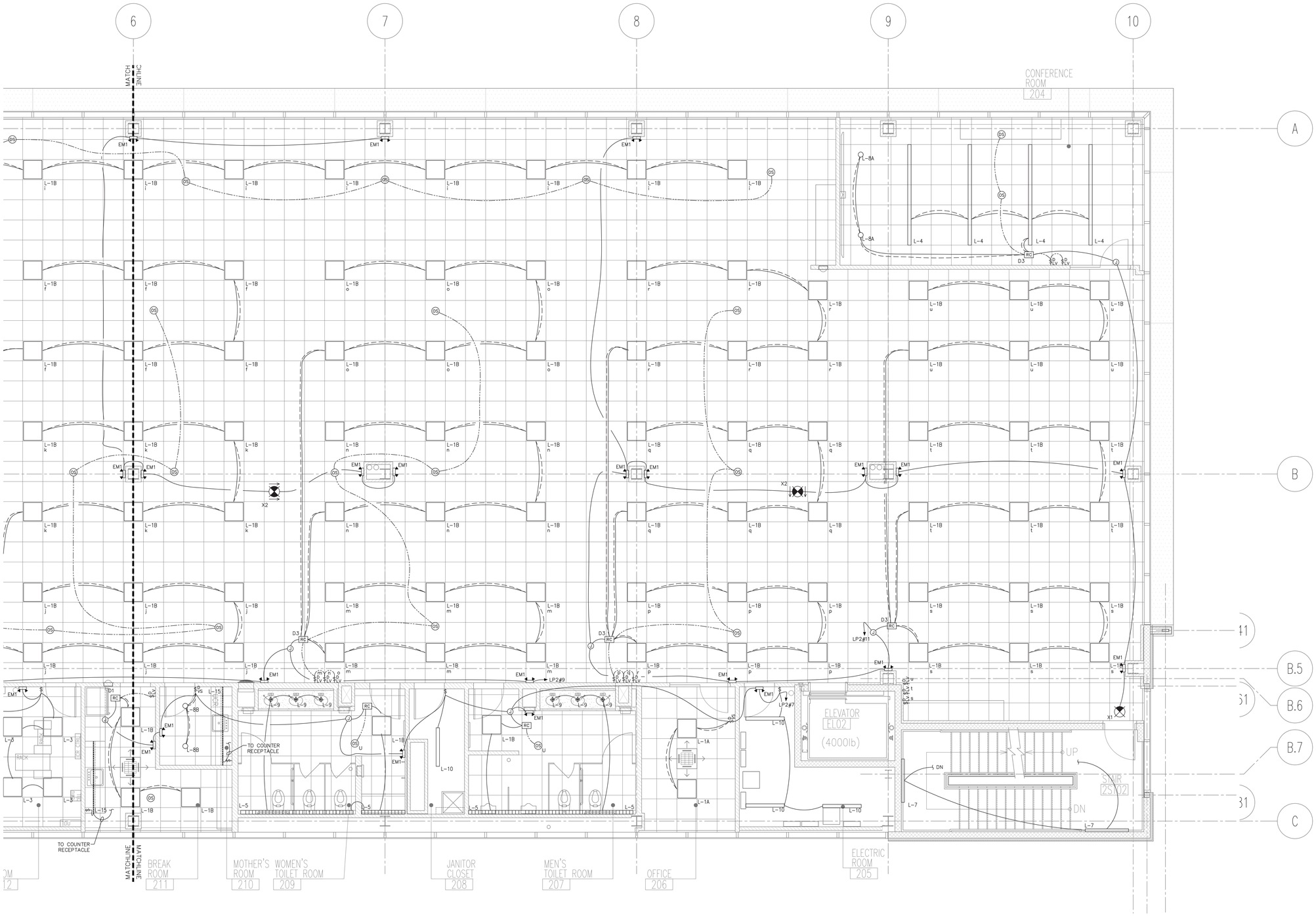

KEY PLAN
SCALE: N.T.S.

1 2nd FLOOR PLAN
SCALE: 1/4" = 1'-0"

1	ISSUED FOR BUILDING DEPARTMENT FILING & BIDDING	04-28-2025

ORANGE AND ROCKLAND UTILITIES, INC.
SPRING VALLEY NEW YORK

Omdex Incorporated Consulting Engineers
21 Cross Avenue
Midland Park, NJ 07432-1851
(201) 444-0753 FAX (201) 444-0839

STATE OF NEW YORK — BRIAN W. PASECHNICK — LICENSED PROFESSIONAL ENGINEER — NO. 91385

Brian W. Pasechnick, PE
NY #91385

SNS ARCHITECTS & ENGINEERS
tel: 201.573.1767
fax:201.573.0838
www.sns-arch-eng.com

DRAFTED: MJR
CHECKED: –
PROJ. NO: 5593
DATE: 08.11.2024

Lorin J. Sonenshine, AIA
Cert./Lic. No. NY 018401

ENGINEERING REVIEW

DEPT.	SIGNATURE	DATE
CIVIL		
METERING		
RELAY		
TRANS. & SUB		

DWN | DES | CHKD
DESIGN REVIEW | DATE

APPROVED | DATE
☐ INFORMATION
☐ COMMENTS
☐ BID
☐ CONSTRUCTION
☐ _____

ELECTRICAL PARTIAL SECOND FLOOR PLAN - LIGHTING

SVOC NEW OFFICE ADDITION
TAX MAP ID 56.52-1-2
390 WEST ROUTE 59
VILLAGE OF SPRING VALLEY
TOWN OF RAMAPO
ROCKLAND COUNTY, NEW YORK

SCALE	FILE NO.	DRAWING NUMBER	SHEET	REV.
AS NOTED		E-202B	70 OF 95	

VILLAGE OF SPRING VALLEY — ROCKLAND COUNTY, NEW YORK

SNS Architects & Engineers, PC
ONE PARAGON DRIVE . MONTVALE . NEW JERSEY . 07645

- John Lignos, AIA
- Lorin J. Sonenshine, AIA
- Steven Napolitano, PE, PP
- Robert Nocella, AIA

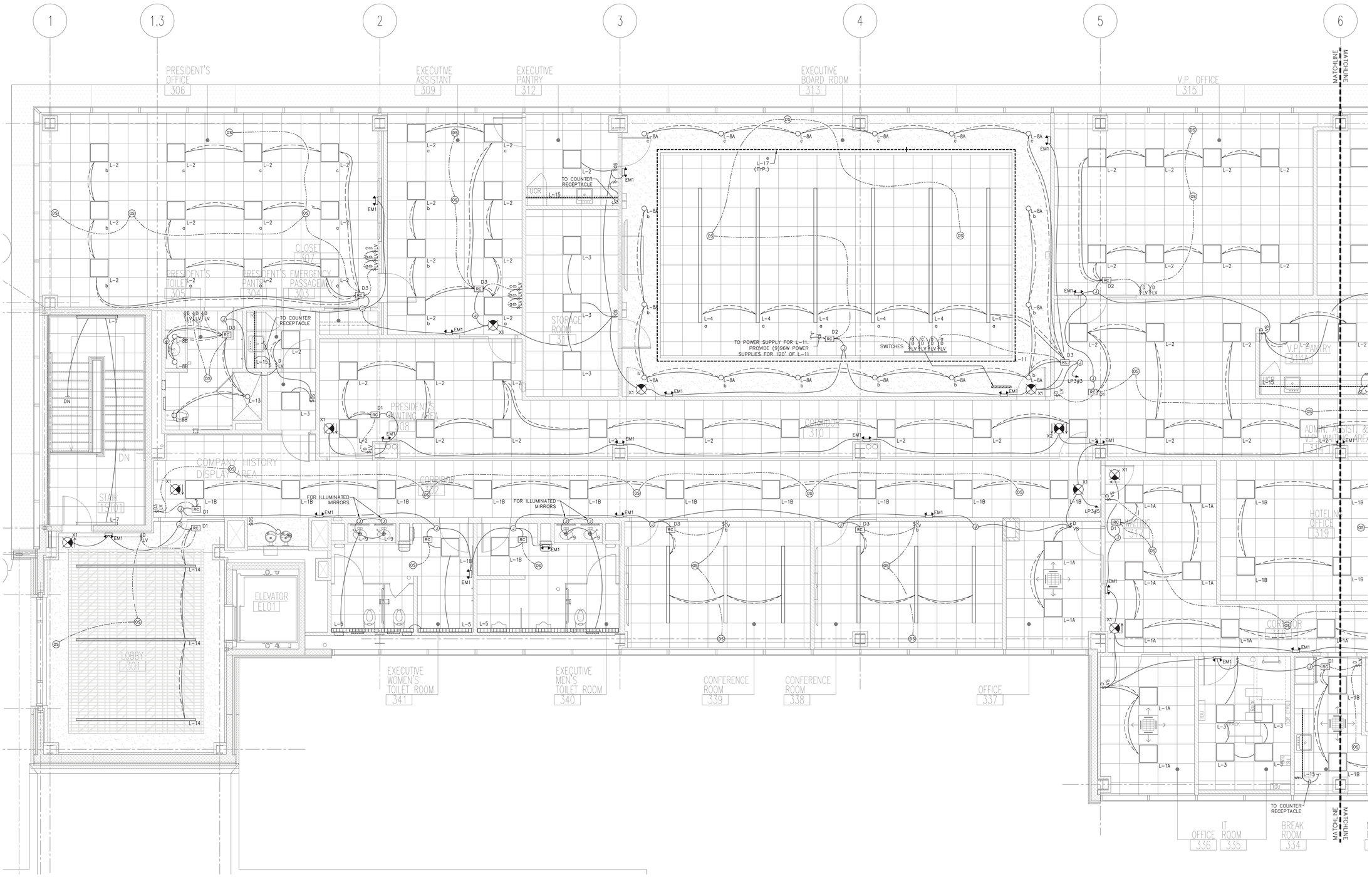

KEY PLAN
SCALE: N.T.S.

1 3rd FLOOR PLAN
SCALE: 1/4" = 1'-0"

1	ISSUED FOR BUILDING DEPARTMENT FILING & BIDDING	04-28-2025

ORANGE AND ROCKLAND UTILITIES, INC.
SPRING VALLEY NEW YORK

Omdex Incorporated Consulting Engineers
21 Cross Avenue
Midland Park, NJ 07432-1851
(201) 444-0753 FAX (201) 444-0839

STATE OF NEW YORK · BRIAN W. PASECHNICK · NO. 91385 · LICENSED PROFESSIONAL ENGINEER

Brian W. Pasechnick, PE
NY #91385

SNS ARCHITECTS & ENGINEERS
tel: 201.573.1787
fax:201.573.0808
www.sns-arch-eng.com

DRAFTED: MJR
CHECKED: –
PROJ. NO: 5593
DATE: 08.11.2024

Lorin J. Sonenshine, AIA
Cert./Lic. No. NY 018401

ENGINEERING REVIEW		
DEPT.	SIGNATURE	DATE
CIVIL		
METERING		
RELAY		
TRANS. & SUB.		

DWN	DES	CHKD
DESIGN REVIEW		DATE

APPROVED
DATE
☐ INFORMATION
☐ COMMENTS
☐ BID
☐ CONSTRUCTION
☐ _____

ELECTRICAL PARTIAL THIRD FLOOR PLAN – LIGHTING

SVOC NEW OFFICE ADDITION
TAX MAP ID 56.52-1-2
390 WEST ROUTE 59
VILLAGE OF SPRING VALLEY
TOWN OF RAMAPO
ROCKLAND COUNTY, NEW YORK

SCALE	FILE NO.	DRAWING NUMBER	SHEET	REV.
AS NOTED		E-203A	71 OF 95	

VILLAGE OF SPRING VALLEY ROCKLAND COUNTY, NEW YORK

SNS Architects & Engineers, PC
ONE PARAGON DRIVE . MONTVALE . NEW JERSEY . 07645
John Lignos, AIA
Lorin J. Sonenshine, AIA
Steven Napolitano, PE, PP
Robert Nocella, AIA

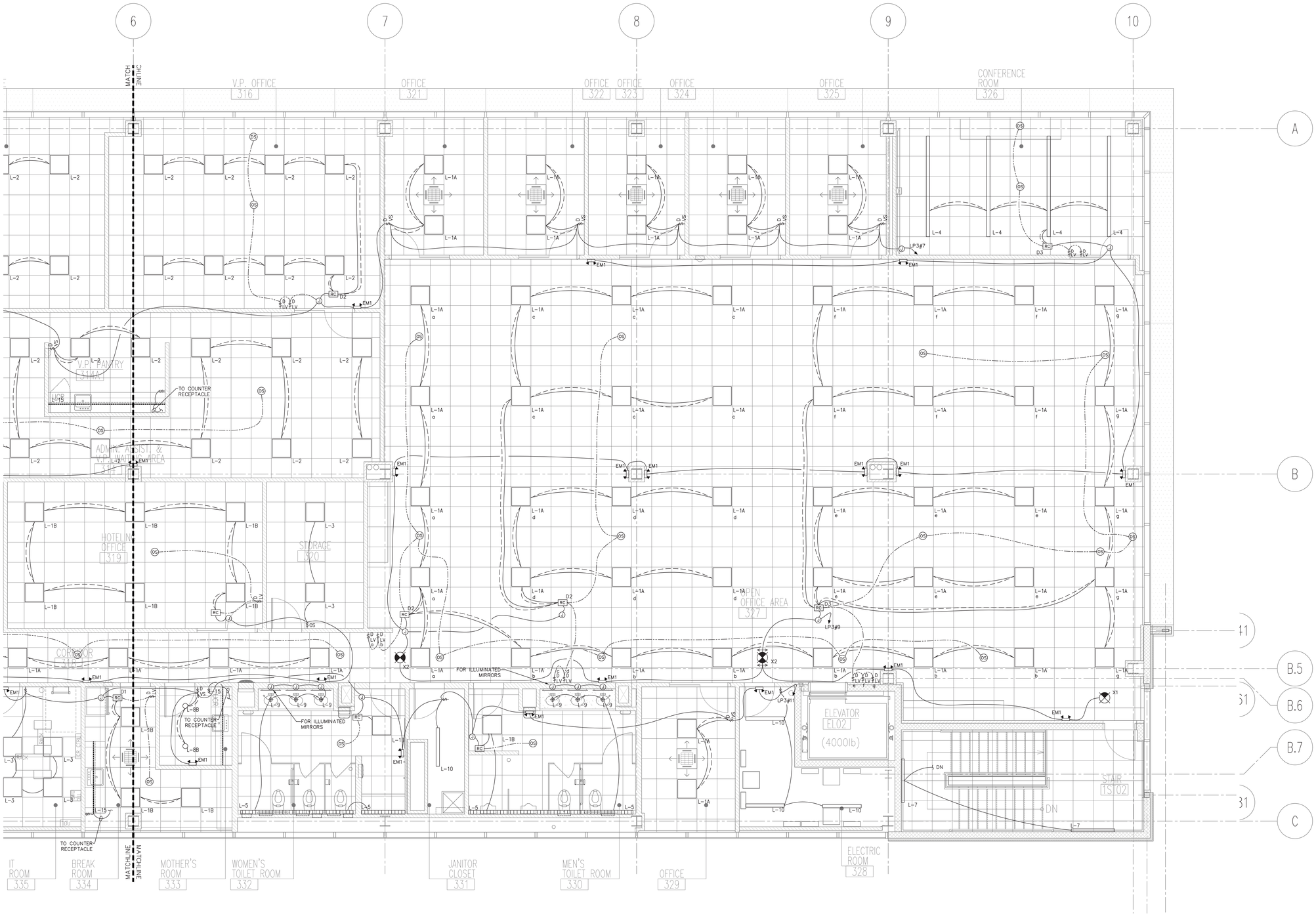

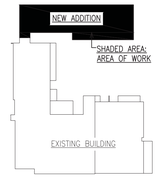

KEY PLAN
SCALE: N.T.S.

1 3rd FLOOR PLAN
SCALE: 1/4" = 1'-0"

1	ISSUED FOR BUILDING DEPARTMENT FILING & BIDDING	04-28-2025

ORANGE AND ROCKLAND UTILITIES, INC.
SPRING VALLEY NEW YORK

Omdex Incorporated Consulting Engineers
21 Cross Avenue
Midland Park, NJ 07432-1851
(201) 444-0753 FAX (201) 444-0839

STATE OF NEW YORK · BRIAN W. PASECHNICK · NO. 81385 · LICENSED PROFESSIONAL ENGINEER

Brian W. Pasechnick, PE
NY #81385

SNS ARCHITECTS & ENGINEERS
tel: 201.573.1767
fax:201.573.0808
www.sns-arch-eng.com
DRAFTED: MJR
CHECKED: –
PROJ. NO: 5593
DATE: 08.11.2024

Lorin J. Sonenshine, AIA
Cert./Lic. No. NY 018401

ENGINEERING REVIEW

DEPT.	SIGNATURE	DATE
CIVIL		
METERING		
RELAY		
TRANS. & SUB.		

APPROVED
DATE
☐ INFORMATION
☐ COMMENTS
☐ BID
☐ CONSTRUCTION
☐ _____

ELECTRICAL PARTIAL THIRD FLOOR PLAN – LIGHTING

SVOC NEW OFFICE ADDITION
TAX MAP ID 56.52-1-2
390 WEST ROUTE 59
VILLAGE OF SPRING VALLEY
TOWN OF RAMAPO
ROCKLAND COUNTY, NEW YORK

DWN	DES	CHKD
DESIGN REVIEW		DATE

SCALE	FILE NO.	DRAWING NUMBER	SHEET	REV.
AS NOTED		E-203B	72 OF 95	

VILLAGE OF SPRING VALLEY ROCKLAND COUNTY, NEW YORK

SNS Architects & Engineers, PC
ONE PARAGON DRIVE . MONTVALE . NEW JERSEY . 07645

- John Lignos, AIA
- Lorin J. Sonenshine, AIA
- Steven Napolitano, PE, PP
- Robert Nocella, AIA

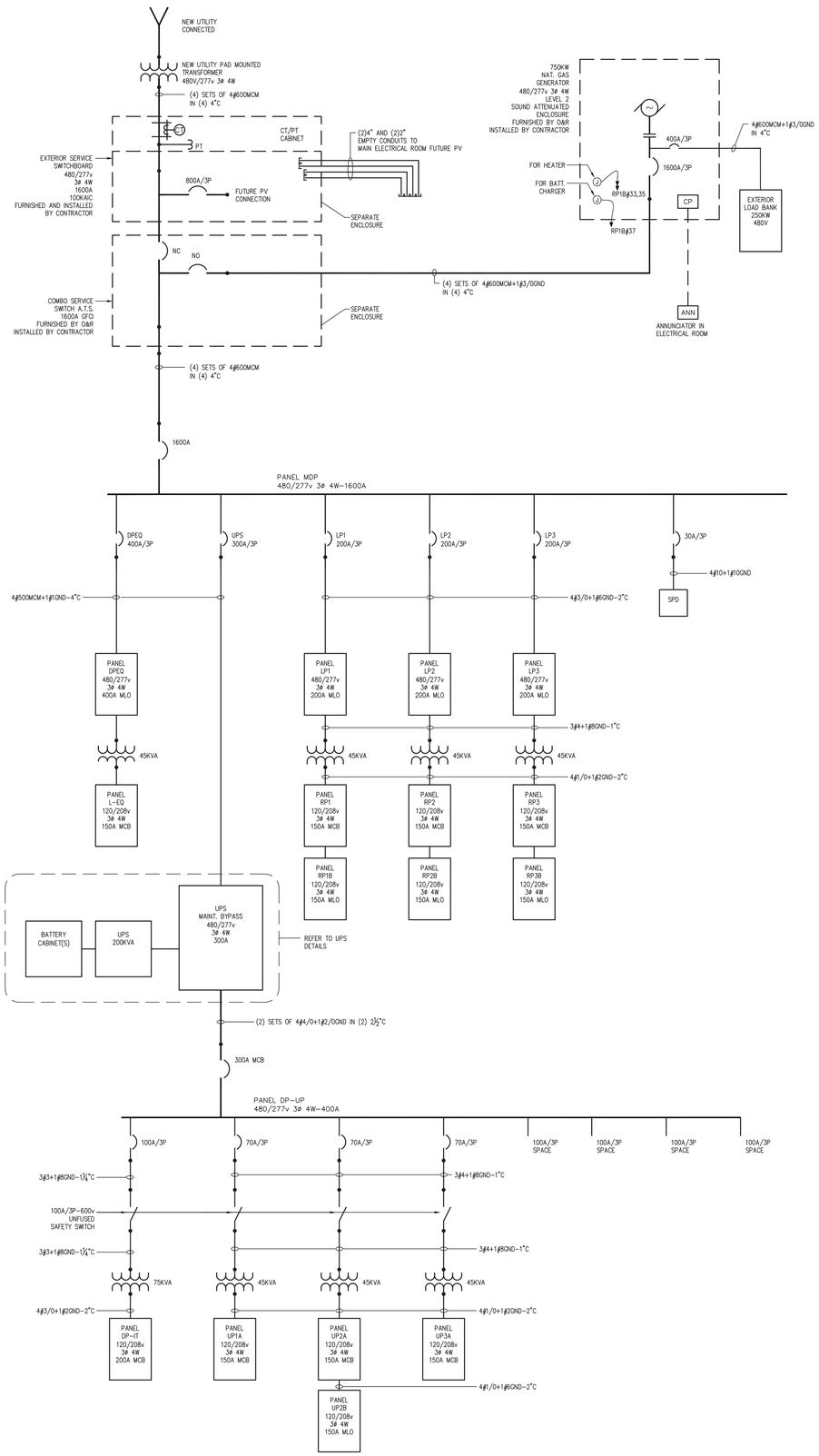

1 SINGLE LINE DIAGRAM
SCALE: NONE

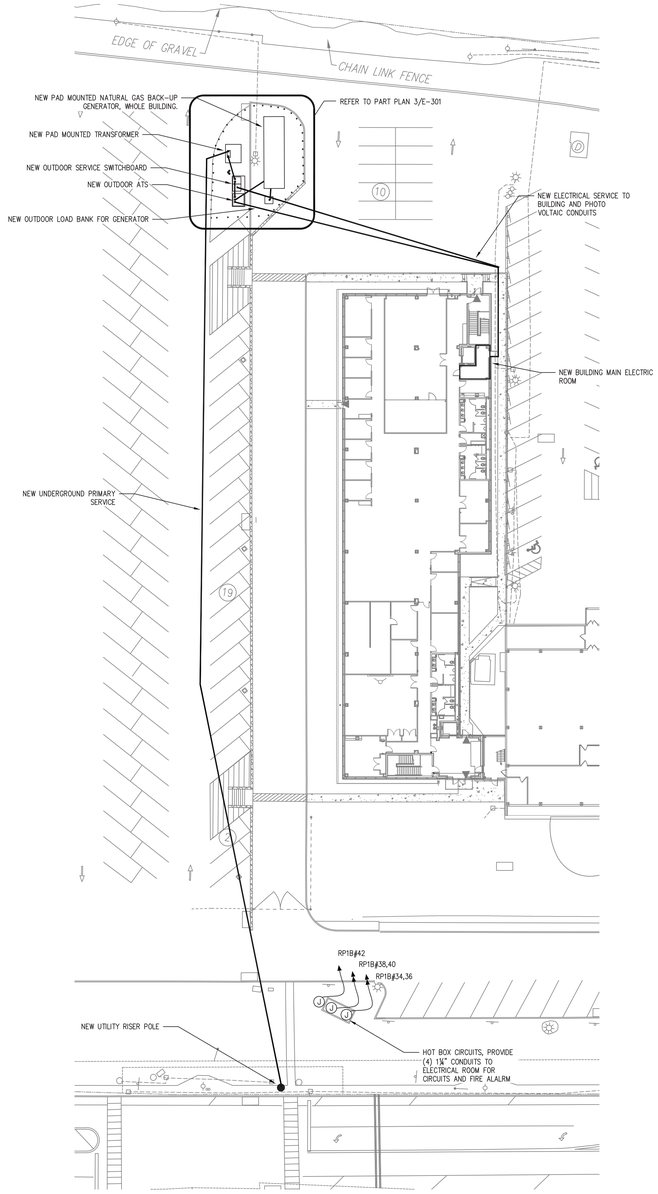

1 ELECTRICAL SITE PLAN
SCALE: 1/30" = 1'-0"

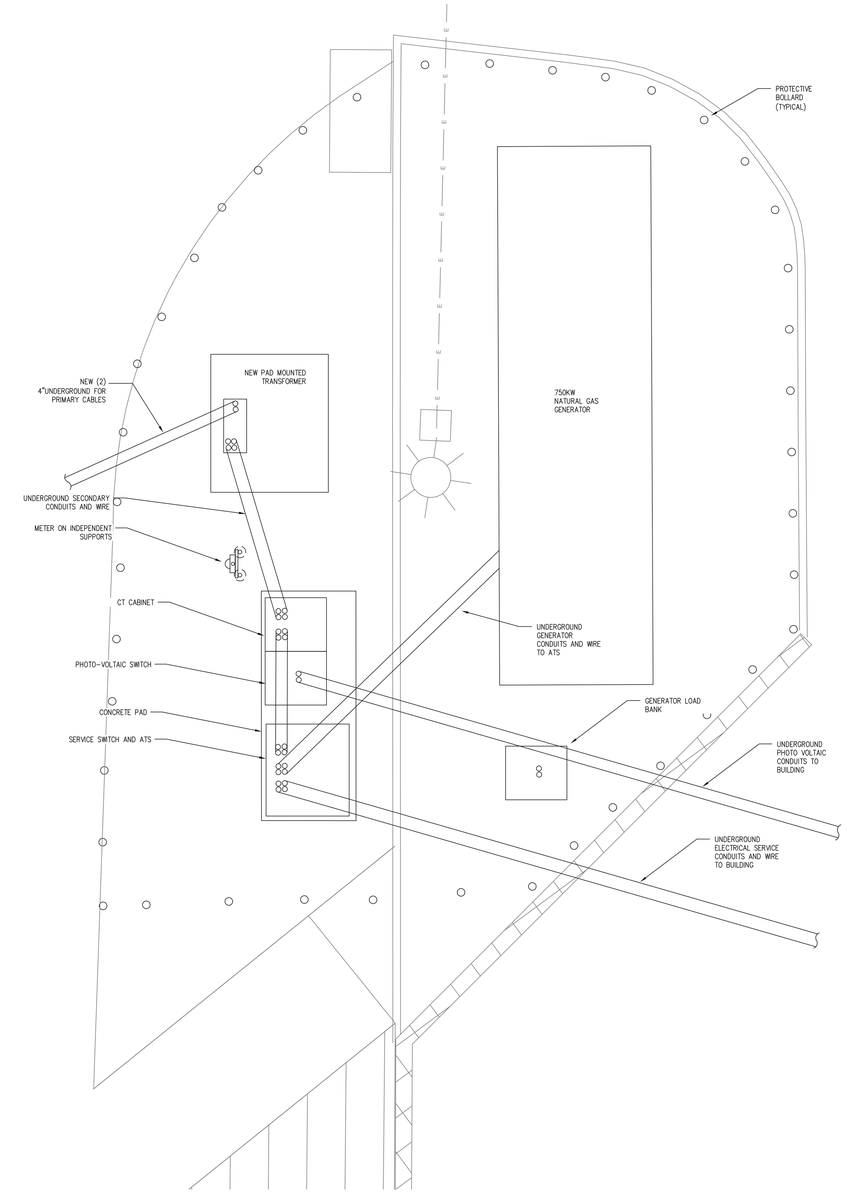

3 OUTDOOR ELECTRICAL SERVICE AREA PART PLAN
SCALE: 1/4" = 1'-0"

1	ISSUED FOR BUILDING DEPARTMENT FILING & BIDDING	04-28-2025

ORANGE AND ROCKLAND UTILITIES, INC.
SPRING VALLEY NEW YORK

Omdex Incorporated Consulting Engineers
21 Cross Avenue
Midland Park, NJ 07432-1811
(201) 444-0753 FAX (201) 444-0839
STATE OF NEW YORK BRIAN W. PASECHNICK NO. 091385 LICENSED PROFESSIONAL ENGINEER
Brian W. Pasechnick, PE
NY #091385

SNS ARCHITECTS & ENGINEERS
tel: 201.573.1767
fax:201.573.0808
www.sns-arch-eng.com

DRAFTED: MJR
CHECKED:
PROJ. NO: 5593
DATE: 08.11.2024

Lorin J. Sonenshine, AIA
Cert./Lic. No. NY 018401

ENGINEERING REVIEW		
DEPT.	SIGNATURE	DATE
CIVIL		
METERING		
RELAY		
TRANS. & SUB.		

APPROVED
DATE
☐ INFORMATION
☐ COMMENTS
☐ BID
☐ CONSTRUCTION
☐ _____

ELECTRICAL SINGLE LINE DIAGRAM

SVOC NEW OFFICE ADDITION
TAX MAP ID 56.52-1-2
300 WEST ROUTE 59
VILLAGE OF SPRING VALLEY
TOWN OF RAMAPO
ROCKLAND COUNTY, NEW YORK

DWN	DES	CHKD	SCALE	FILE NO.	DRAWING NUMBER	SHEET	REV.
DESIGN REVIEW		DATE	AS NOTED		E-301	_ OF 95	

VILLAGE OF SPRING VALLEY ROCKLAND COUNTY, NEW YORK

SNS Architects & Engineers, PC
ONE PARAGON DRIVE . MONTVALE . NEW JERSEY . 07645
John Lignos, AIA
Lorin J. Sonenshine, AIA
Steven Napolitano, PE, PP
Robert Nocella, AIA

PANEL MDP

480 / 277 VOLTS, 3 ø 4 WIRE+GND | SURFACE MOUNTING | 1600 AMP 3 POLE ■ MCB □ MLO | INTEGRATED EQUIPMENT RATING 65,000 A. SYM.

CKT No.	LOAD SERVED	POLES	FRAME	TRIP	LOAD	FEEDER
1	PANEL DP-EQ	3	400A	400A	227.6 KVA	4#500MCM+1#1GND-4"C
2	UPS	3	400A	300A	81.5 KVA	4#500MCM+1#1GND-4"C
3	PANEL LP1	3	225A	200A	74.2 KVA	4#3/0+1#6GND-2"C
4	PANEL LP2	3	225A	200A	60.3 KVA	4#3/0+1#6GND-2"C
5	PANEL LP3	3	225A	200A	52.9 KVA	4#3/0+1#6GND-2"C
6	SPARE	3	225A	200A	–	–
7	SPACE	3	225A	–	–	–
8	SPACE	3	225A	–	–	–
9	SPACE	3	100A	–	–	–
10	SPACE	3	100A	–	–	–

PANEL DP-EQ

480 / 277 VOLTS, 3 ø 4 WIRE+GND | SURFACE MOUNTING | 400 AMP 3 POLE □ MCB ■ MLO | INTEGRATED EQUIPMENT RATING 44,000 A. SYM.

KVA	LOAD SERVED	NO.	OCP	OCP	NO.	LOAD SERVED	KVA
8.6	ACCU-S-1	1	40A	40A	2	ACCU-N-1	8.6
8.6	3#6+1#8GND-1"C	3	3P	3P	4	3#8+1#10GND-¾"C	8.6
8.6	–	5	–	–	6	–	8.6
8.6	ACCU-S-2	7	40A	40A	8	ACCU-N-2	8.6
8.6	3#6+1#8GND-1"C	9	3P	3P	10	3#8+1#10GND-¾"C	8.6
8.6	–	11	–	–	12	–	8.6
8.6	ACCU-S-3	13	40A	40A	14	ACCU-N-3	8.6
8.6	3#6+1#8GND-1"C	15	3P	3P	16	3#8+1#10GND-¾"C	8.6
8.6	–	17	–	–	18	–	8.6
7.5		19	35A	35A	20	ERV-N	7.5
7.5	3#8+1#10GND-¾"C	21	3P	3P	22	3#8+1#10GND-¾"C	7.5
7.5	–	23	–	–	24	–	7.5
9.3	PANEL L-EQ	25	70A	–	26	SPACE	–
9.3	3#4+1#8GND-1"C	27	3P	–	28	SPACE	–
9.3	–	29	–	–	30	SPACE	–
–	SPACE	31	–	–	32	SPACE	–
–	SPACE	33	–	–	34	SPACE	–
–	SPACE	35	–	–	36	SPACE	–
–	SPACE	37	–	–	38	SPACE	–
–	SPACE	39	–	–	40	SPACE	–
–	SPACE	41	–	–	42	SPACE	–

HEAT PUMP LOAD 182.6 KVA x 100% = 182.6 KVA
VENTILATION 45.0 KVA x 100% = 45.0 KVA
TOTAL 227.6 KVA

PANEL DP-UP

480 / 277 VOLTS, 3 ø 4 WIRE+GND | SURFACE MOUNTING | 300 AMP 3 POLE □ MCB ■ MLO | INTEGRATED EQUIPMENT RATING 44,000 A. SYM.

KVA	LOAD SERVED	NO.	OCP	OCP	NO.	LOAD SERVED	KVA
11.7	DP-IT	1	100A	70A	2	PANEL UP1A	5.0
11.7	3#3+1#8GND-1¼"C	3	3P	3P	4	3#4+1#8GND-1"C	5.0
11.7	–	5	–	–	6	–	5.0
8.7	PANEL UP2A,2B	7	70A	70A	8	PANEL UP3A	5.1
8.7	3#4+1#8GND-1"C	9	3P	3P	10	3#4+1#8GND-1"C	5.1
8.7	–	11	–	–	12	–	5.1
–	SPACE	13	–	–	14	SPACE	–
–	SPACE	15	–	–	16	SPACE	–
–	SPACE	17	–	–	18	SPACE	–
–	SPACE	19	–	–	20	SPACE	–
–	SPACE	21	–	–	22	SPACE	–
–	SPACE	23	–	–	24	SPACE	–

RECEPS. 10.0 KVA x 100% = 10.0 KVA
RECEPS. 72.6 KVA x 50% = 36.3 KVA
EQUIPMENT 35.2 KVA x 100% = 35.2 KVA
TOTAL 81.5 KVA

PANEL DP-IT

120 / 208 VOLTS, 3 ø 4 WIRE+GND | SURFACE MOUNTING | 200 AMP 3 POLE □ MCB ■ MLO | INTEGRATED EQUIPMENT RATING 22,000 A. SYM.

	KVA	LOAD SERVED	NO.	OCP	OCP	NO.	LOAD SERVED	KVA
NOTE 1	2.5	SECURITY	1	30A	20A	2	RECTIFIER	1.5
NOTE 1	2.5	SECURITY	3	30A	2P	4	2#12+1#12GND	1.5
	1.5	LAN EQ	5	20A	20A	6	RECTIFIER	1.5
	1.5	LAN EQ	7	20A	20A	8	RECTIFIER	1.5
	1.5	LAN CABLE	9	20A	20A	10	FEM TO CELL	.8
	1.5	LAN CABLE	11	20A	20A	12	CARD ACCESS	.7
	.5	2ND FLOOR CARD ACCESS	13	20A	20A	14	CARD ACCESS	.7
	.5	3RD FLOOR CARD ACCESS	15	20A	20A	16	RECTIFIER	1.5
	1.0	2ND FLOOR FEM TO CELL	17	20A	2P	18	2#12+1#12GND	1.5
	1.0	3RD FLOOR FEM TO CELL	19	20A	20A	20	RECTIFIER	1.5
	.2	2ND FLOOR IT	21	20A	2P	22	2#12+1#12GND	1.5
	.2	2ND FLOOR IT	23	20A	20A	24	RECTIFIER	1.5
	.2	2ND FLOOR IT	25	20A	2P	26	2#12+1#12GND	1.5
	.2	2ND FLOOR IT	27	20A	20A	28	SPARE	–
	.2	3RD FLOOR IT	29	20A	20A	30	SPARE	–
	.2	3RD FLOOR IT	31	20A	20A	32	SPARE	–
	.2	3RD FLOOR IT	33	20A	20A	34	SPARE	–
	.2	3RD FLOOR IT	35	20A	20A	36	SPARE	–
	–	SPARE	37	20A	20A	38	SPARE	–
	–	SPARE	39	20A	20A	40	SPARE	–
	–	SPARE	41	20A	20A	42	SPARE	–

NOTES:
1. PROVIDE #10AWG FOR 30A CIRCUITS

EQUIPMENT 35.2 KVA x 100% = 35.2 KVA

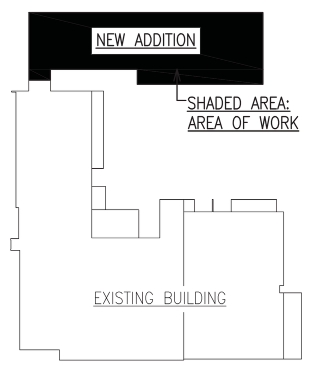

KEY PLAN
SCALE: N.T.S.

PANEL RP1A

120 / 208 VOLTS, 3 ø 4 WIRE+GND | SURFACE MOUNTING | 150 AMP 3 POLE ■ MCB □ MLO | INTEGRATED EQUIPMENT RATING 22,000 A. SYM.

KVA	LOAD SERVED	NO.	OCP	OCP	NO.	LOAD SERVED	KVA
.3	FC UPS	1	20A	20A	2	FC-S1 LOBBY	.2
.3	2#12+1#12GND-¾"C	3	2P	2P	4	2#12+1#12GND-¾"C	.2
.3	FC IT-1A	5	20A	20A	6	FC-S2 LUNCH ROOM	.3
.3	2#12+1#12GND-¾"C	7	2P	2P	8	2#12+1#12GND-¾"C	.3
.3	FC IT-1B	9	20A	20A	10	FC-S3 TRAINING	.3
.3	2#12+1#12GND-¾"C	11	2P	2P	12	2#12+1#12GND-¾"C	.3
.4	FC S9, N15	13	20A	20A	14	FC-S4, 5, 6 TEST	.7
.4	2#12+1#12GND-¾"C	15	2P	2P	16	2#12+1#12GND-¾"C	.7
.3	FC N2-5 OFFICE'S	17	20A	20A	18	FC-S7, 8, 9 CONF. ROOM	.4
.3	2#12+1#12GND-¾"C	19	2P	2P	20	2#12+1#12GND-¾"C	.4
.2	FC N7-11 OFFICE'S	21	20A	20A	22	ELEV. 2 CONTROLLER	1.5
.2	2#12+1#12GND-¾"C	23	2P	20A	24	ELEV. 2 PIT LIGHT	.1
.4	FC N1, 6 STORAGE	25	20A	20A	26	ELEV. 2 SUMP PUMP	.3
.4	2#12+1#12GND-¾"C	27	2P	20A	28	ELEV. 2 PIT RECEP.	.2
.4	FC N12, 13, 14	29	20A	–	30	ELEV 1 CONTROLLER	1.5
.4	2#12+1#12GND-¾"C	31	2P	–	32	ELEV. 1 PIT LIGHT	.1
.2	CIRC. PUMP 1	33	20A	–	34	ELEV. 1 SUMP PUMP	.3
.2	CIRC. PUMP 2	35	20A	–	36	ELEV. 1 PIT RECEP.	.2
.2	AREA OF REFUGE SYSTEM	37	20A	–	38	SPARE	–
–	SPARE	39	20A	–	40	SPARE	–
–	SPARE	41	20A	–	42	SPARE	–

FEED THRU LUGS

VENTILATION 9.0 KVA x 100% = 9.0 KVA
MISC. EQ. 4.6 KVA x 100% = 4.6 KVA
TOTAL 13.6 KVA

PANEL RP1B

120 / 208 VOLTS, 3 ø 4 WIRE+GND | SURFACE MOUNTING | 150 AMP 3 POLE □ MCB ■ MLO | INTEGRATED EQUIPMENT RATING 22,000 A. SYM.

KVA	LOAD SERVED	NO.	OCP	OCP	NO.	LOAD SERVED	KVA
.5	LUNCH ROOM 103	1	20A	20A	2	FLOOR RECEPS. TRAINING	.9
.8	LUNCH ROOM DW	3	20A	20A	4	FLOOR RECEPS. TRAINING	.9
.2	LUNCH ROOM COUNTER	5	20A	20A	6	FLOOR RECEPS. TRAINING	.9
.2	LUNCH ROOM COUNTER	7	20A	20A	8	FLOOR RECEPS. TRAINING	.4
.8	LUNCH ROOM REFRIG.	9	20A	20A	10	RECEPS. TRAINING	.7
.8	LUNCH RM. BOTTLE FILL	11	20A	20A	12	TRAINING CHARGE DRAWER	.2
.5	RECEPS. TOILET	13	20A	20A	14	RECEPS. CORRIDOR	.7
1.5	HAND DRYERS 130	15	20A	20A	16	RECEPS. OFFICE 127	.5
1.5	HAND DRYERS 131	17	20A	20A	18	RECEPS. COPIER	.7
.8	EWC	19	20A	20A	20	RECEPS. CONV.	.4
1.5	HAND DRYERS 122	21	20A	20A	22	RECEPS. LOBBY	.2
1.5	HAND DRYERS 124	23	20A	20A	24	RECEPS. UPS/MDF	.7
.8	COPIER 119	25	20A	20A	26	RECEPS. BATHROOMS	.7
.4	RECEPS. 119	27	20A	20A	28	RECEPS. CORRIDOR 117	.9
.5	RECEPS. MOTHER	29	20A	20A	30	RECEPS. STORAGE	1.3
.2	HOT BOX RECEP.	31	20A	20A	32	RECEPS. STORAGE	1.3
3.0	GENERATOR HEATER	33	40A	20A	34	HOT BOX HTR.	.8
3.0	3#6+1#8GND-1"C	35	2P	2P	36	3#8+1#8GND-¾"C	.8
.2	GENERATOR BATT CHAR.	37	20A	20A	38	HOT BOX HTR.	.8
–	SPARE	39	20A	2P	40	3#8+1#8GND-¾"C	.8
–	SPARE	41	20A	20A	42	HOT BOX RECEPTACLE	.2

RECEPS. 10.0 KVA x 100% = 10.0 KVA
RECEPS. 13.9 KVA x 50% = 7.0 KVA
ELECT. HT. 3.0 KVA x 100% = 3.0 KVA
TOTAL 20.0 KVA

PANEL UP1A

120 / 208 VOLTS, 3 ø 4 WIRE+GND | SURFACE MOUNTING | 150 AMP 3 POLE ■ MCB □ MLO | INTEGRATED EQUIPMENT RATING 10,000 A. SYM.

KVA	LOAD SERVED	NO.	OCP	OCP	NO.	LOAD SERVED	KVA
.9	OPEN OFFICE	1	20A	20A	2	RECEPS. OFFICE 108	.4
.6	OPEN OFFICE	3	20A	20A	4	RECEPS. OFFICE 110	.4
.9	OPEN OFFICE	5	20A	20A	6	RECEPS. OFFICE 114	.7
.9	OPEN OFFICE	7	20A	20A	8	CONF. ROOM 116	.8
.9	OPEN OFFICE	9	20A	20A	10	CONF. ROOM 128	.8
.7	OPEN OFFICE	11	20A	20A	12	CONF. ROOM 129	.8
.7	OPEN OFFICE	13	20A	20A	14	TESTING	.9
.7	OPEN OFFICE	15	20A	20A	16	TESTING	.9
.6	OPEN OFFICE	17	20A	20A	18	TESTING	.9
.6	OPEN OFFICE	19	20A	20A	20	TESTING	.9
.6	OPEN OFFICE	21	20A	20A	22	TESTING	1.2
.6	OPEN OFFICE	23	20A	20A	24	TESTING	.6
.6	OPEN OFFICE	25	20A	20A	26	RECEP. OFFICE 127	.2
.6	OPEN OFFICE	27	20A	20A	28	SPARE	–
.6	OPEN OFFICE	29	20A	20A	30	SPARE	–
–	SPARE	31	20A	20A	32	SPARE	–
–	SPARE	33	20A	20A	34	SPARE	–
–	SPARE	35	20A	20A	36	SPARE	–
–	SPARE	37	20A	20A	38	SPARE	–
–	SPARE	39	20A	20A	40	SPARE	–
–	SPARE	41	20A	20A	42	SPARE	–

RECEPS. 10.0 KVA x 100% = 10.0 KVA
RECEPS. 10.0 KVA x 50% = 5.0 KVA
TOTAL 15.0 KVA

PANEL RP2A

120 / 208 VOLTS, 3 ø 4 WIRE+GND | SURFACE MOUNTING | 150 AMP 3 POLE ■ MCB □ MLO | INTEGRATED EQUIPMENT RATING 22,000 A. SYM.

	KVA	LOAD SERVED	NO.	OCP	OCP	NO.	LOAD SERVED	KVA
	.3	FC S13 CONF. ROOM	1	20A	20A	2	FC N16, 18, 19	.6
	.3	2#12+1#12GND-¾"C	3	2P	2P	4	2#12+1#12GND-¾"C	.6
	.3	FC S14, 16 CONF. ROOMS	5	20A	20A	6	FC N17	.2
	.3	2#12+1#12GND-¾"C	7	2P	2P	8	2#12+1#12GND-¾"C	.2
	.4	FC S12, 15, 17 OPEN	9	20A	20A	10	FC S11 LOBBY	.2
	.4	2#12+1#12GND-¾"C	11	2P	2P	12	2#12+1#12GND-¾"C	.2
	.7	FC S18, 19, 20, 22	13	20A	20A	14	FC IT-2	.3
	.7	2#12+1#12GND-¾"C	15	2P	2P	16	2#12+1#12GND-¾"C	.3
	.5	FC S21, N23, N21	17	20A	20A	18	FC N20	.3
	.5	2#12+1#12GND-¾"C	19	2P	2P	20	2#12+1#12GND-¾"C	.3
GF	.8	EWC	21	20A	20A	22	FC N24, 22, 24A	.6
	.8	COPIER	23	20A	2P	24	2#12+1#12GND-¾"C	.6
	.4	RECEPS. COUNTER	25	20A	–	26	SPACE	–
	.9	RECEPS. INTERIOR WALL	27	20A	–	28	SPACE	–
	.9	RECEPS. EXTERIOR WALL	29	20A	–	30	SPACE	–
	.7	RECEPS. NORTH WALL	31	20A	–	32	SPACE	–
	1.2	RECEPS. OFFICE 215	33	20A	–	34	SPACE	–
	1.2	RECEPS. OFFICE 214	35	20A	–	36	SPACE	–
	1.2	RECEPS. OFFICE 206	37	20A	–	38	SPACE	–
	–	SPARE	39	20A	–	40	SPACE	–
	–	SPARE	41	20A	–	42	SPACE	–

GF: GFCI CIRCUIT BREAKER
FEED THRU LUGS

VENTILATION 8.8 KVA x 100% = 8.8 KVA
RECEPS. 8.1 KVA x 100% = 8.1 KVA
TOTAL 16.9 KVA

PANEL RP2B

120 / 208 VOLTS, 3 ø 4 WIRE+GND | SURFACE MOUNTING | 150 AMP 3 POLE □ MCB ■ MLO | INTEGRATED EQUIPMENT RATING 22,000 A. SYM.

	KVA	LOAD SERVED	NO.	OCP	OCP	NO.	LOAD SERVED	KVA
	.4	RECEPS. BREAK ROOM	1	20A	20A	2	RECEPS. BATHROOM	.7
	.4	RECEPS. MOTHERS	3	20A	20A	4	HAND DRYER 209	1.5
GF	.8	REF BREAK	5	20A	20A	6	HAND DRYER 207	1.5
	1.5	MICROWAVE	7	20A	20A	8	RECEPS. ELECT. ROOM	.9
	1.5	MICROWAVE	9	20A	20A	10	RECEPS. COPIER	.8
	.2	RECEPS. BREAK COUNTER	11	20A	20A	12	RECEPS. COUNTER	.4
	.2	RECEPS. BREAK COUNTER	13	20A	20A	14	RECEPS. COPIER	.8
	–	SPARE	15	20A	20A	16	RECEPS. COUNTER	.4
	–	SPARE	17	20A	20A	18	SMOKE DAMPERS	1.2
	–	SPARE	19	20A	20A	20	SMOKE DAMPERS	1.2
	–	SPARE	21	20A	20A	22	SPARE	–
	–	SPARE	23	20A	20A	24	SPARE	–
	–	SPARE	25	20A	20A	26	SPARE	–
	–	SPARE	27	20A	20A	28	SPARE	–
	–	SPACE	29	–	–	30	SPACE	–
	–	SPACE	31	–	–	32	SPACE	–
	–	SPACE	33	–	–	34	SPACE	–
	–	SPACE	35	–	–	36	SPACE	–
	–	SPACE	37	–	–	38	SPACE	–
	–	SPACE	39	–	–	40	SPACE	–
	–	SPACE	41	–	–	42	SPACE	–

GF: GFCI CIRCUIT BREAKER

RECEPS. 12.0 KVA x 100% = 12.0 KVA

PANEL RP3A

120 / 208 VOLTS, 3 ø 4 WIRE+GND | SURFACE MOUNTING | 150 AMP 3 POLE ■ MCB □ MLO | INTEGRATED EQUIPMENT RATING 22,000 A. SYM.

	KVA	LOAD SERVED	NO.	OCP	OCP	NO.	LOAD SERVED	KVA
	.6	FC S25, 26, 24	1	20A	20A	2	FC N38, N37	.4
	.6	2#12+1#12GND-¾"C	3	2P	2P	4	2#12+1#12GND-¾"C	.4
	.3	FC S23 LOBBY	5	20A	20A	6	FC N33, N32, N25	.6
	.3	2#12+1#12GND-¾"C	7	2P	2P	8	2#12+1#12GND-¾"C	.6
	.3	FC S28	9	20A	20A	10	FC N26, N27	.3
	.3	2#12+1#12GND-¾"C	11	2P	2P	12	2#12+1#12GND-¾"C	.3
	.4	FC S31, N39	13	20A	20A	14	FC N28, 29, 30, 31	.7
	.4	2#12+1#12GND-¾"C	15	2P	2P	16	2#12+1#12GND-¾"C	.7
	.4	FC S27, S29	17	20A	20A	18	RECEPS. EXEC. TENET	.4
	.4	2#12+1#12GND-¾"C	19	2P	20A	20	RECEPS. EXEC. PANTRY	.2
	.7	FC S30, N36, N34, N35	21	20A	20A	22	RECEPS. EXEC. PANTRY	.4
	.7	2#12+1#12GND-¾"C	23	2P	20A	24	RECEPS. CORRIDOR	.9
	.2	FC IT 3	25	20A	20A	26	RECEPS. EXEC. PANTRY	.2
	.2	2#12+1#12GND-¾"C	27	2P	20A	28	RECEPS. EXEC. PANTRY	.4
GF	.8	RECEPS. EWC	29	20A	20A	30	RECEPS. CORRIDOR	.6
	.7	RECEPS. BATHROOM	31	20A	20A	32	SPARE	–
	1.5	HAND DRYERS	33	20A	20A	34	SPARE	–
	1.5	HAND DRYERS	35	20A	20A	36	SPARE	–
	–	SPARE	37	20A	20A	38	SPARE	–
	–	SPARE	39	20A	20A	40	SPARE	–
	–	SPARE	41	20A	20A	42	SPARE	–

GF: GFCI CIRCUIT BREAKER
FEED THRU LUGS

VENTILATION 9.8 KVA x 100% = 9.8 KVA
MISC. EQ. 7.6 KVA x 100% = 7.6 KVA
TOTAL 17.4 KVA

PANEL RP3B

120 / 208 VOLTS, 3 ø 4 WIRE+GND | SURFACE MOUNTING | 150 AMP 3 POLE ■ MCB □ MLO | INTEGRATED EQUIPMENT RATING 22,000 A. SYM.

KVA	LOAD SERVED	NO.	OCP	OCP	NO.	LOAD SERVED	KVA	
.2	RECEPS. VP PANTRY	1	20A	20A	2	RECEPS. REFRIG.	.8	GF
.2	RECEPS. VP PANTRY	3	20A	20A	4	RECEPS. MICROWAVE	1.2	
.2	RECEPS. VP PANTRY	5	20A	20A	6	RECEPS. MICROWAVE	1.2	
1.2	RECEPS. VP. WAITING	7	20A	20A	8	RECEPS. COUNTER	.2	
.5	RECEPS. VP. HOTELING	9	20A	20A	10	RECEPS. COUNTER	.2	
.5	RECEPS. VP. HOTELING	11	20A	20A	12	RECEPS. MOTHERS	.2	
.7	RECEPS. VP. HOTELING	13	20A	20A	14	RECEPS. MOTHERS	.2	
1.3	RECEPS. STORAGE	15	20A	20A	16	HAND DRYER	1.5	
.8	RECEPS. COPIER	17	20A	20A	18	HAND DRYER	1.5	
.4	RECEPS. COUNTER	19	20A	20A	20	COPIER	.8	
.7	RECEPS. OFFICE WALLS	21	20A	20A	22	COPIER	.4	
.5	RECEPS. OFFICE 329	23	20A	20A	24	SPARE	–	
1.3	RECEPS. OFFICE 322	25	20A	20A	26	SPARE	–	
1.3	RECEPS. OFFICE 325	27	20A	20A	28	SPARE	–	
–	SPARE	29	20A	20A	30	SPARE	–	
–	SPARE	31	20A	20A	32	SPARE	–	
–	SPARE	33	20A	20A	34	SPARE	–	
–	SPARE	35	20A	20A	36	SPARE	–	
–	SPARE	37	20A	20A	38	SPARE	–	
–	SPARE	39	20A	20A	40	SPARE	–	
–	SPARE	41	20A	20A	42	SPARE	–	

GF: GFCI CIRCUIT BREAKER

RECEPTACLES 10.0 KVA x 100% = 10.0 KVA
RECEPTACLES 8.0 KVA x 50% = 4.0 KVA
TOTAL 14.0 KVA

PANEL UP2A

120 / 208 VOLTS, 3 ø 4 WIRE+GND | SURFACE MOUNTING | 150 AMP 3 POLE ■ MCB □ MLO | INTEGRATED EQUIPMENT RATING 22,000 A. SYM.

KVA	LOAD SERVED	NO.	OCP	OCP	NO.	LOAD SERVED	KVA
.6	FURN.	1	20A	20A	2	FURN.	.9
.9	FURN.	3	20A	20A	4	FURN.	.9
.9	FURN.	5	20A	20A	6	FURN.	.9
.3	FURN.	7	20A	20A	8	FURN.	.9
.9	FURN.	9	20A	20A	10	FURN.	.9
.9	FURN.	11	20A	20A	12	FURN.	.3
.9	FURN.	13	20A	20A	14	FURN.	.9
.9	FURN.	15	20A	20A	16	FURN.	.9
.9	FURN.	17	20A	20A	18	FURN.	.9
.3	FURN.	19	20A	20A	20	FURN.	.9
.9	FURN.	21	20A	20A	22	FURN.	.9
.9	FURN.	23	20A	20A	24	FURN.	.3
.9	FURN.	25	20A	20A	26	FURN.	.9
.9	FURN.	27	20A	20A	28	FURN.	.9
.9	FURN.	29	20A	20A	30	FURN.	.9
.3	FURN.	31	20A	20A	32	SPARE	–
.4	RECEPS. OFFICE 216	33	20A	20A	34	SPARE	–
.4	RECEPS. OFFICE 214	35	20A	20A	36	SPARE	–
1.5	CONF. ROOM 219	37	20A	20A	38	SPARE	–
1.5	CONF. ROOM 218	39	20A	20A	40	SPARE	–
–	SPARE	41	20A	20A	42	SPARE	–

FEED THRU LUGS

RECEPTACLES 10.0 KVA x 100% = 10.0 KVA
RECEPTACLES 18.4 KVA x 50% = 9.2 KVA
TOTAL 19.2 KVA

PANEL UP2B

120 / 208 VOLTS, 3 ø 4 WIRE+GND | SURFACE MOUNTING | 150 AMP 3 POLE □ MCB ■ MLO | INTEGRATED EQUIPMENT RATING 22,000 A. SYM.

KVA	LOAD SERVED	NO.	OCP	OCP	NO.	LOAD SERVED	KVA
.6	FURN.	1	20A	20A	2	RECEP. OFFICE 206	.4
.6	FURN.	3	20A	20A	4	CONF. ROOM 204	.9
.6	FURN.	5	20A	20A	6	CONF. ROOM 204	1.2
.6	FURN.	7	20A	20A	8	204 AV RACK	1.0
.6	FURN.	9	20A	20A	10	203 AV RACK	1.0
.9	FURN.	11	20A	20A	12	CONF. ROOM 203	1.2
.9	FURN.	13	20A	20A	14	CONF. ROOM 203	1.0
.3	FURN.	15	20A	20A	16	SPARE	–
.9	FURN.	17	20A	20A	18	SPARE	–
.9	FURN.	19	20A	20A	20	SPARE	–
.3	FURN.	21	20A	20A	22	SPARE	–
–	SPARE	23	20A	20A	24	SPARE	–

RECEPTACLES 10.0 KVA x 100% = 10.0 KVA
RECEPTACLES 3.9 KVA x 50% = 2.0 KVA
TOTAL 12.0 KVA

PANEL UP3A

120 / 208 VOLTS, 3 ø 4 WIRE+GND | SURFACE MOUNTING | 150 AMP 3 POLE □ MCB ■ MLO | INTEGRATED EQUIPMENT RATING 22,000 A. SYM.

KVA	LOAD SERVED	NO.	OCP	OCP	NO.	LOAD SERVED	KVA
.8	RECEPS. EXEC. OFFICE	1	20A	20A	2	RECEPS. OFFICE 337	.4
.8	RECEPS. EXEC. OFFICE	3	20A	20A	4	RECEPS. OFFICE 329	.2
.9	RECEPS. EXEC. OFFICE	5	20A	20A	6	CONF. ROOM 338	1.2
.9	RECEPS. VP. OFFICE	7	20A	20A	8	CONF. ROOM 339	1.2
.9	RECEPS. VP. OFFICE	9	20A	20A	10	FURN.	.6
.9	RECEPS. VP. ASST'S.	11	20A	20A	12	FURN.	.6
.6	FURN.	13	20A	20A	14	RECEPS. BOARDROOM	.5
.6	FURN.	15	20A	20A	16	RECEPS. BOARDROOM	1.0
.6	FURN.	17	20A	20A	18	RECEPS. BOARDROOM	1.0
.6	FURN.	19	20A	20A	20	RECEPS. OFFICE 322	.5
.9	FURN.	21	20A	20A	22	RECEPS. OFFICE 325	.4
.9	FURN.	23	20A	20A	24	SPARE	–
.9	FURN.	25	20A	20A	26	SPARE	–
.6	FURN.	27	20A	20A	28	SPARE	–
.6	FURN.	29	20A	20A	30	SPARE	–
.6	FURN.	31	20A	20A	32	SPARE	–
.6	FURN.	33	20A	20A	34	SPARE	–
–	SPARE	35	20A	20A	36	SPARE	–
–	SPARE	37	20A	20A	38	SPARE	–
–	SPARE	39	20A	20A	40	SPARE	–
–	SPARE	41	20A	20A	42	SPARE	–

RECEPTACLES 10.0 KVA x 100% = 10.0 KVA
RECEPTACLES 10.3 KVA x 50% = 5.2 KVA
TOTAL 15.2 KVA

PANEL LP1

120 / 208 VOLTS, 3 ø 4 WIRE+GND | SURFACE MOUNTING | 200 AMP 3 POLE □ MCB ■ MLO | INTEGRATED EQUIPMENT RATING 44,000 A. SYM.

	KVA	LOAD SERVED	NO.	OCP	OCP	NO.	LOAD SERVED	KVA
	4.0	STAIR 1 HTR.	1	30A	70A	2	PANEL RP1	11.2
	4.0	STAIR 2 HTR.	3	30A	3P	4	3#4+1#8GND-1"C	11.2
	3.0	WATER HTR. 2	5	20A	–	6	–	11.2
NOTE 1	6.0	WATER HTR. 1	7	40A	20A	8	LIGHTING TRAINING	1.6
	1.5	STAIR LTG.	9	20A	20A	10	LIGHTING	2.0
	1.5	STAIR LTG.	11	20A	20A	12	LIGHTING	2.0
	3.0	WATER HTR. 4	13	20A	20A	14	LIGHTING	2.0
	–	SPARE	15	20A	20A	16	LIGHTING	2.0
	–	SPARE	17	20A	20A	18	LIGHTING	2.0
	–	SPARE	19	20A	20A	20	LIGHTING	2.0
	–	SPARE	21	20A	20A	22	SPARE	–
	–	SPARE	23	20A	20A	24	SPARE	–

NOTES
1. USE #8AWG FOR 40A CIRCUITS

VENTILATION 9.0 KVA x 100% = 9.0 KVA
MISC. EQ. 4.6 KVA x 100% = 4.6 KVA
RECEPS. 10.0 KVA x 100% = 10.0 KVA
RECEPS. 13.9 KVA x 50% = 7.0 KVA
ELECT. HT. 11.0 KVA x 100% = 11.0 KVA
WATER HTR. 9.0 KVA x 125% = 11.3 KVA
LIGHTING 17.0 KVA x 125% = 21.3 KVA
TOTAL 74.2 KVA

PANEL LP2

120 / 208 VOLTS, 3 ø 4 WIRE+GND | SURFACE MOUNTING | 200 AMP 3 POLE □ MCB ■ MLO | INTEGRATED EQUIPMENT RATING 44,000 A. SYM.

KVA	LOAD SERVED	NO.	OCP	OCP	NO.	LOAD SERVED	KVA
2.5	LIGHTING	1	20A	70A	2	PANEL RP2A/2B	8.0
2.5	LIGHTING	3	20A	3P	4	3#4+1#8GND-1"C	8.0
2.5	LIGHTING	5	20A	–	6	–	8.0
2.5	LIGHTING	7	20A	–	8	SPACE	–
2.5	LIGHTING	9	20A	–	10	SPACE	–
2.5	LIGHTING	11	20A	–	12	SPACE	–
–	SPARE	13	20A	–	14	SPACE	–
–	SPARE	15	20A	–	16	SPACE	–
–	SPARE	17	20A	–	18	SPACE	–
–	SPARE	19	20A	–	20	SPACE	–
–	SPARE	21	20A	–	22	SPACE	–
–	SPARE	23	20A	–	24	SPACE	–

VENTILATION 9.0 KVA x 100% = 9.0 KVA
RECEPS. 10.0 KVA x 100% = 10.0 KVA
RECEPS. 10.1 KVA x 50% = 5.1 KVA
LIGHTING 17.0 KVA x 125% = 21.3 KVA
TOTAL 60.3 KVA

PANEL LP3

120 / 208 VOLTS, 3 ø 4 WIRE+GND | SURFACE MOUNTING | 200 AMP 3 POLE □ MCB ■ MLO | INTEGRATED EQUIPMENT RATING 44,000 A. SYM.

	KVA	LOAD SERVED	NO.	OCP	OCP	NO.	LOAD SERVED	KVA
NOTE 1	6.0	WATER HEATER 3 EXEC.	1	40A	70A	2	PANEL RP3	
	2.5	LIGHTING	3	20A	3P	4	3#4+1#8GND-1"C	
	2.5	LIGHTING	5	20A	–	6	–	
	2.5	LIGHTING	7	20A	–	8	SPACE	–
	2.5	LIGHTING	9	20A	–	10	SPACE	–
	2.5	LIGHTING	11	20A	–	12	SPACE	–
	2.5	LIGHTING	13	20A	–	14	SPACE	–
	–	SPARE	15	20A	–	16	SPACE	–
	–	SPARE	17	20A	–	18	SPACE	–
	–	SPARE	19	20A	–	20	SPACE	–
	–	SPARE	21	20A	–	22	SPACE	–
	–	SPARE	23	20A	–	24	SPACE	–

NOTES
1. USE #8AWG FOR 40A CIRCUITS

VENTILATION 9.8 KVA x 100% = 9.8 KVA
RECEPS. 10.0 KVA x 100% = 10.0 KVA
RECEPS. 15.6 KVA x 50% = 7.8 KVA
LIGHTING 17.0 KVA x 125% = 21.3 KVA
WATER HTR. 3.0 KVA x 125% = 4.0 KVA
TOTAL 52.9 KVA

PANEL L-EQ

120 / 208 VOLTS, 3 ø 4 WIRE+GND | SURFACE MOUNTING | 150 AMP 3 POLE ■ MCB □ MLO | INTEGRATED EQUIPMENT RATING 22,000 A. SYM.

KVA	LOAD SERVED	NO.	OCP	OCP	NO.	LOAD SERVED	KVA
2.9	CU-IT-1A	1	35A	20A	2	CU-IT-2	1.6
2.9	2#8+1#10GND-¾"C	3	2P	2P	4	2#10+1#10GND-¾"C	1.6
2.9	CU-IT-1B	5	35A	20A	6	CU-IT-3	1.6
2.9	2#8+1#10GND-¾"C	7	2P	2P	8	2#10+1#10GND-¾"C	1.6
2.9	CU-UPS	9	35A	15A	10	CU-EL-01	1.0
2.9	2#8+1#10GND-¾"C	11	2P	2P	12	2#10+1#10GND-¾"C	1.0
.7	ROOF TOP RECEP. N	13	20A	15A	14	CU-EL-02	1.0
.7	ROOF TOP RECEP. S	15	20A	2P	16	2#12+1#12GND-¾"C	1.0
–	SPARE	17	20A	–	18	SPACE	–
–	SPARE	19	20A	–	20	SPACE	–
–	SPARE	21	20A	–	22	SPACE	–
–	SPARE	23	20A	–	24	SPACE	–

HEAT PUMP LOAD 27.8 KVA x 100% = 27.8 KVA

1	ISSUED FOR BUILDING DEPARTMENT FILING & BIDDING	04-28-2025

ORANGE AND ROCKLAND UTILITIES, INC.
SPRING VALLEY NEW YORK

Omdex Incorporated Consulting Engineers
21 Cross Avenue
Midland Park, NJ 07432-1811
(201) 444-0753 FAX (201) 444-0839

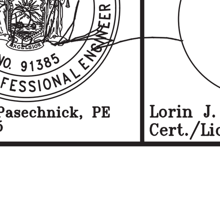

Brian W. Pasechnick, PE
NY #91385

SNS ARCHITECTS & ENGINEERS
tel: 201.573.1767
fax: 201.573.0808
www.sns-arch-eng.com

DRAFTED: MJR
CHECKED: –
PROJ. NO: 5593
DATE: 08.11.2024

Lorin J. Sonenshine, AIA
Cert./Lic. No. NY 018401

ENGINEERING REVIEW

DEPT.	SIGNATURE	DATE
CIVIL		
METERING		
RELAY		
TRANS. & SUB.		

DWN | DES | CHKD
DESIGN REVIEW | DATE

APPROVED
DATE
☐ INFORMATION
☐ COMMENTS
☐ BID
☐ CONSTRUCTION
☐ ________

ELECTRICAL PANEL SCHEDULES

SVOC NEW OFFICE ADDITION
TAX MAP ID 56.52-1-2
390 WEST ROUTE 59
VILLAGE OF SPRING VALLEY
TOWN OF RAMAPO
ROCKLAND COUNTY, NEW YORK

SCALE	FILE NO.	DRAWING NUMBER	SHEET	REV.
AS NOTED		E-401	74 OF 95	

VILLAGE OF SPRING VALLEY | ROCKLAND COUNTY, NEW YORK

SNS Architects & Engineers, PC
ONE PARAGON DRIVE . MONTVALE . NEW JERSEY . 07645
▫ John Lignos, AIA
▪ Lorin J. Sonenshine, AIA
▫ Steven Napolitano, PE, PP
▫ Robert Nocella, AIA

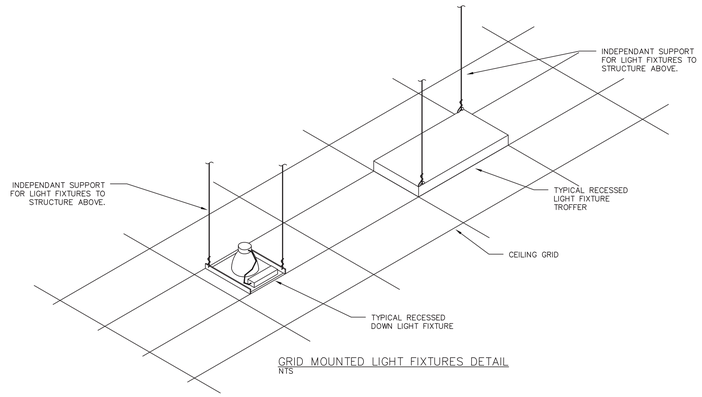

GRID MOUNTED LIGHT FIXTURES DETAIL
NTS

LIGHTING LEGEND

OS U	CEILING MOUNTED LOW VOLTAGE ULTRASONIC OCCUPANCY SENSOR WATTSTOPPER LMUC-100
OS P	CEILING MOUNTED LOW VOLTAGE PASSIVE INFRARED OCCUPANCY SENSOR WATTSTOPPER LMPC-100
OS D	CEILING MOUNTED LOW VOLTAGE DUAL-TECH OCCUPANCY SENSOR WATTSTOPPER LMDC-100
VS U	CEILING MOUNTED LOW VOLTAGE ULTRASONIC VACANCY SENSOR WATTSTOPPER LMUC-100
VS P	CEILING MOUNTED LOW VOLTAGE PASSIVE INFRARED VACANCY SENSOR WATTSTOPPER LMPC-100
VS D	CEILING MOUNTED LOW VOLTAGE DUAL-TECH VACANCY SENSOR WATTSTOPPER LMDC-100
OS	CORNER MOUNTED LOW VOLTAGE DUAL-TECH OCCUPANCY SENSOR WATTSTOPPER LMDX-100
VS	CORNER MOUNTED LOW VOLTAGE DUAL-TECH VACANCY SENSOR WATTSTOPPER LMDX-100
LT	CORNER/WALL MOUNTED LOW TEMPERATURE PASSIVE INFRARED OCCUPANCY SENSOR WATTSTOPPER CB-100
DS	MILTI-ZONE ON/OFF AND DIMMING OPEN LOOP PHOTOSENSOR, WATTSTOPPER LMLS-400 (PRIMARY ZONE ONLY) LMLS-500 (PRIMARY/SECONDARY ZONES)
BOCA	0-10V TO PHASE ADAPTIVE CONVERTER (6.25A), WATTSTOPPER BF-SDS10V-AST
LMZC	ZONE CONTROLLER WITH ENCLOSURE, WATTSTOPPER LMZC-301
LMBC	NETWORK BRIDGE, WATTSTOPPER LMBC-300
ELCU	EMERGENCY LIGHTING CONTROL UNIT, WATTSTOPPER ELCU-200
LMIN	INPUT INTERFACE, WATTSTOPPER LMIN-104
———	NORMAL WIRING
—·—·—	EMERGENCY WIRING
— — —	LOW VOLTAGE WIRING
—··—··—	CAT5 CABLING
--------	MS/TP CABLING

$	TOGGLE SWITCH, 120/277V 20A DECORA STYLE
$LV	LOW VOLTAGE 1-BUTTON WALL SWITCH, WATTSTOPPER LMSW-101
$3LV	LOW VOLTAGE 3-WAY 1-BUTTON WALL SWITCH, WATTSTOPPER LMSW-101
$D3LV	LOW VOLTAGE 3-WAY 2-BUTTON DIMMING WALL SWITCH, WATTSTOPPER LMSW-102
$DLV	LOW VOLTAGE 1-BUTTON DIMMING WALL SWITCH, WATTSTOPPER LMDM-101
$D5LV	LOW VOLTAGE 5-BUTTON SCENE WALL SWITCH, WATTSTOPPER LMSW-105
$VS	LINE VOLTAGE 1-BUTTON VACANCY SENSOR WALL SWITCH, WATTSTOPPER DSW-301
$OS	LINE VOLTAGE 1-BUTTON OCCUPANCY SENSOR WALL SWITCH, WATTSTOPPER DSW-301
$DVS	LINE VOLTAGE 0-10V DIMMING VACANCY SENSOR WALL SWITCH, WATTSTOPPER DW-311
$3/4VS	LINE VOLTAGE 1-BUTTON 3-WAY/ 4-WAY VACANCY SENSOR WALL SWITCH, WATTSTOPPER DSW-301
$D2VS	LINE VOLTAGE DIMMING VACANCY SENSOR WALL SWITCH, WATTSTOPPER PW-101D
RC	LOW VOLTAGE ON/OFF ROOM CONTROLLER WITH 2 RELAYS, WATTSTOPPER LMRC-102
RC D1	LOW VOLTAGE ON/OFF/0-10V 10A DIMMING ROOM CONTROLLER WTH 1 RELAY AND 1 0-10V DIMMING OUTPUT, WATTSTOPPER LMRC-211
RC D2	LOW VOLTAGE ON/OFF/0-10V 10A DIMMING ROOM CONTROLLER WTH 2 RELAYS AND 2 0-10V DIMMING OUTPUTS, WATTSTOPPER LMRC-112
RC D3	LOW VOLTAGE ON/OFF/0-10V 20A DIMMING ROOM CONTROLLER WTH 3 RELAYS AND 3 0-10V DIMMING OUTPUTS, WATTSTOPPER LMRC-213
BZ	UNIVERSAL VOLTAGE POWER PACK, WATTSTOPPER BZ-50
DT	UNIVERSAL VOLTAGE THREE CHANNEL DIMMABLE TRANSFORMER FOR 24V FIXTURE, TIVOLI INF-J-288-3-4-24
PS	LED DRIVER FOR 24V FIXTURE, JUSTIN, INC. 961-24SSD

LIGHTING FIXTURE SCHEDULE

SYMBOL	MANUFACTURER	DESCRIPTION	CATALOG NUMBER	LAMPS VOLTS	TYPE	#	WATTS	MODEL/COMMENTS	REMARKS
L-1A	FOCAL POINT	RECESSED 2x2	FAM2-22-ARC-3500L-35K-1C-UNV-LD1-G-WH	277	LED	–	23		
L-1B	FOCAL POINT	RECESSED 2x2	FAM2-22-ARC-4500L-35K-1C-UNV-LD1-G-WH	277	LED	–	32		
L-2	ARON LIGHTING	RECESSED 2x2 EDGE LIT	LFT-TG-ST-XXX-22FA-1250-B2-35K8-UNV-DM	277	LED	–	44		
L-3	JADEMAR LIGHTING	RECESSED 2x2 FLAT PANEL LED	JPT22-40W-CPS-UNV-35K	277	LED	–	40		
L-4	FOCAL POINT	RECESSED LINEAR	FSM4L-BW-625LF-35K 1C-UNV-LD1-G/T-WH-00	277	LED	–	6/ft		
L-5	FOCAL POINT	LINEAR WALL MOUNTED PERIMETER	FSM4PR-ALH-AFO-375LF-35K-1C-UNV-LD1-G-WH-00	277	LED	–	4.3/ft		
L-6	FOCAL POINT	PENDANT LINEAR	FSM2LS-BW-6250L-35K-1C-UNV-LD1-C48-WH-00	277	LED	–	4.5/ft		
L-7	XTRA LIGHT	WALL MOUNTED 4' STAIR FIXTURE	LRW-4-4000L-35K-DIM-U-MLD-EM	277	LED	–	35		INTEGRAL BATTERY BACK-UP WITH OCCUPANCY SENSOR
L-8A	FOCAL POINT	RECESSED 3.5" ROUND DOWNLIGHT	FLC3D-RD-SW-1500L-UNV-LD1-T-BH-LC3-RO-15L-35K-DSS-VWFL-CD-WP	277	LED	–	17	–	
L-8B	FOCAL POINT	RECESSED 3.5" ROUND DOWNLIGHT	FLC3D-RD-SW-1100L-UNV-LD1-T-BH-LC3-RO-11L-35K-DSS-VWFL-CD-WP	277	LED	–	12	–	
L-9	FOCAL POINT	RECESSED 2.5" ROUND DOWNLIGHT	FLC2D-RD-SW-1100L-UNV-LD1-T-BH-LC3-RO-11L-35K-DSS-WFL-CD-WA	277	LED	–	12		
L-10	XTRA LIGHT	SURFACE STRIP LIGHT 4' LENGTH	LRS-4-4000L-35K-DIM	277	LED	–	29		
L-11	ACOLYTE	LED TAP	RB90-SWS220-4.435-1-RBMNTSL	24	LED	–	4.4/ft	–	PROVIDE ALL ACCESSORIES AND POWER SUPPLIES
L-13	FOCAL POINT	RECESSED 3.5" ROUND DOWNLIGHT	FLC3D-RD-SW-900L-UNV-LD1-T-BH-LC3-RO-900L-35K-DSS-VWFL-CD-WP	277	LED	–	10	–	WET LOCATION
L-14	EXTANT ARCHITECTURAL LIGHTING	LINEAR PENDANT	HGT-3P-TD-DT-00-DML-35-ME0GC-VU-D-BP	277	LED	–	4.5/ft	–	0-10v DIMMING
L-15	JADEMAR LIGHTING	UNDER CABINET LIGHTING	JUCL-CS00-120-35K	120	LED	–	5/ft		PROVIDE LENGTH AS REQUIRED
L-16	FOCAL POINT	PENDANT LINEAR DIRECT/INDIRECT	FSM1CBS-BWLC-375UP-375DN-35K-2C-UNV-LD1-C24-LMC-BKCD-MB-AxBR	277	LED	–	6.5/ft		
EM1	ISOLITE	SURFACE 2-HEAD EM FIXTURE	BUG-3W-WH-MB	–	–	–	–	–	INTEGRAL BATTERY BACK-UP
EM2	ISOLITE	RECESSED 2 HEAD EM FIXTURES		–	–	–	–	–	INTEGRAL BATTERY BACK-UP
EX-1	PERFORMANCE IN LIGHTING	EXTERIOR SURFACE EGRESS LIGHT	M50-5336-T4-AM-3K-UNV-NA-EMPK-PHC-B	277	LED	–	53	–	INTEGRAL BATTERY BACK-UP
EX-2	FOCAL POINT	EXTERIOR RECESSED DOWNLIGHT	FLC4D-RO-SW-2500L-UNV-LD1-1C-OD-LC4-RO-25L-30K-DN-BJ-BP-REMOTE EM	277	LED	–	32	–	REMOTE BATTERY BACK-UP
EX-3	PERFORMANCE IN LIGHTING	EXTERIOR SURFACE EGRESS LIGHT	M30-36-T4-AM-3K-UNV-NA-REMPHC-B	277	LED	–	36	–	REMOTE BATTERY BACK-UP
X1	ISOLITE	EDGELIT EXIT SIGN 1 FACE	EUG-EM-R-1C-MTEB	277	LED	–	–	–	INTEGRAL BATTERY BACK-UP
X2	ISOLITE	EDGELIT EXIT SIGN 2 FACES	EUG-EM-R-2M-MTEB	277	LED	–	–	–	INTEGRAL BATTERY BACK-UP
X3	ISOLITE	THERMO PLASTIC EXIT SIGN UNIVERSAL FACE(S)		277	LED	–	–	–	INTEGRAL BATTERY BACK-UP

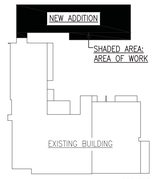

KEY PLAN
SCALE: N.T.S.

LIGHTING CONTROLS:

GENERAL:

1. ALL LIGHTING CONTROLS SHALL BE IN CONFORMANCE WITH NEC, ASHRAE AND ALL LOCAL CODES.
2. ALL LIGHTING CONTROLS SHALL BE OF ONE MANUFACTURER.

PRODUCTS:

1. ALL PRODUCTS SHALL BE UL LISTED.

SUBMITTALS:

1. CONTRACTOR SHALL OBTAIN THE SERVICES OF A LIGHTING CONTROL VENDOR.
2. VENDOR SHALL PREPARE SITE SPECIFIC FLOOR PLANS AND WIRING DIAGRAMS.
3. PRODUCT DATA SHEETS SHALL BE SUBMITTED ALONG WITH PLANS AND WIRING DIAGRAMS.
4. THE BASIS OF DESIGN IS PER WATTSTOPPER LIGHTING CONTROLS.

LIGHTING NOTES:

1. COORDINATE EXACT LOCATION & MOUNTING OF ALL LIGHTNG FIXTURES WITH ARCHITECTURAL REFLECTED CEILING PLANS.
2. PROVIDE SEPARATE HOT LEG TO ALL LIGHTING FIXTURES CONTAINING EMERGENCY BATTERY INVERTER. REFER TO DETAILS FOR SWITCHING THE SAME.
3. ELECTRICAL CONTRACTOR TO COORDINATE ALL LIGHTING FIXTURE TRIMS WITH CEILING TYPES. SEE ARCHITECTURAL DRAWINGS FOR CEILING INFORMATION.
4. PROVIDE ALL SEISMIC CLIPS AND/OR BRACING AS REQUIRED. SUPPORT ALL FIXTURES FROM STRUCTURE ABOVE BY 2 INDEPENDENT SUPPORTS.
5. CONTRACTOR TO PROVIDE ALL SITE SPECIFIC LIGHTING CONTROL SHOP DRAWINGS, CONTROL DIAGRAMS, CUT SHEETS, ETC.
6. ALL OCCUPANCY/VACANCY SENSORS SHALL BE A MINIMUM OF 6' FROM ANY HVAC DIFFUSER.
7. ALL NEW LIGHTING FIXTURE CIRCUITS AND HOMERUNS SHALL BE RUN WITH DEDICATED NEUTRAL CONDUCTORS.
8. PROVIDE AFC "LUMINARY" CABLE FOR LED FIXTURE DIMMING OR PROVIDE EQUAL METHOD. PROVIDE 2#16 CONTROL FOR 0-10v DIMMING.
9. EM OR HALF SHADED DESIGNATES EMERGENCY LIGHTS WIRED TO EMERGENCY GENERATOR CIRCUITS ALL EM FIXTURES TO BE UNSWITCHED AND ACT AS NIGHT LIGHTS UNLESS INDICATED OTHERWISE.
10. ALL FIXTURES 3500K, UNLESS OTHERWISE SPECIFIED.

1	ISSUED FOR BUILDING DEPARTMENT FILING & BIDDING	04-28-2025

ORANGE AND ROCKLAND UTILITIES, INC.
SPRING VALLEY NEW YORK

Omdex Incorporated Consulting Engineers
21 Cross Avenue
Midland Park, NJ 07432-1851
(201) 444-0753 FAX (201) 444-0839

STATE OF NEW YORK · BRIAN W. PASECHNICK · No. 91385 · LICENSED PROFESSIONAL ENGINEER

Brian W. Pasechnick, PE
NY #91385

SNS ARCHITECTS & ENGINEERS
tel: 201.573.1767
fax:201.573.0808
www.sns-arch-eng.com

DRAFTED: MJR
CHECKED: –
PROJ. NO: 5593
DATE: 08.11.2024

Lorin J. Sonenshine, AIA
Cert./Lic. No. NY 018401

ENGINEERING REVIEW

DEPT.	SIGNATURE	DATE
CIVIL		
METERING		
RELAY		
TRANS. & SUB		

DWN. | DES | CHKD.
DESIGN REVIEW | DATE

APPROVED
DATE
☐ INFORMATION
☐ COMMENTS
☐ BID
☐ CONSTRUCTION
☐ _____

LIGHTING DETAILS

SVOC NEW OFFICE ADDITION
TAX MAP ID 56.52-1-2
290 WEST ROUTE 59
VILLAGE OF SPRING VALLEY
TOWN OF RAMAPO
ROCKLAND COUNTY, NEW YORK

SCALE	FILE NO.	DRAWING NUMBER	SHEET	REV.
AS NOTED		E-501	75 OF 95	

VILLAGE OF SPRING VALLEY ROCKLAND COUNTY, NEW YORK

SNS Architects & Engineers, PC
ONE PARAGON DRIVE . MONTVALE . NEW JERSEY . 07645
John Lignos, AIA
Lorin J. Sonenshine, AIA
Steven Napolitano, PE, PP
Robert Nocella, AIA

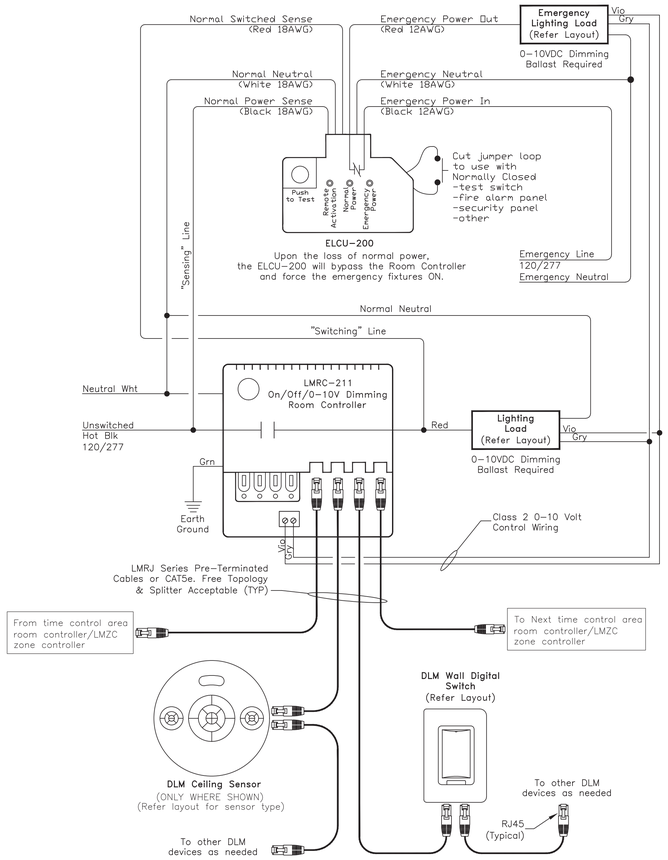

TYP. CORRIDOR (LMRC-211 WITH ELCU-200) WIRING DIAGRAM

NOTE: Refer to layout for exact quantity and model number of devices.

NOTE: ALL ROOM CONTROLLERS WILL BE DAISY CHAINED VIA CAT5e CABLE TO A ZONE CONTROLLER LMZC-301 (NETWORK A/B) FOR TIME CONTROL. (REFER LMZC-301 RISER DIAGRAM)

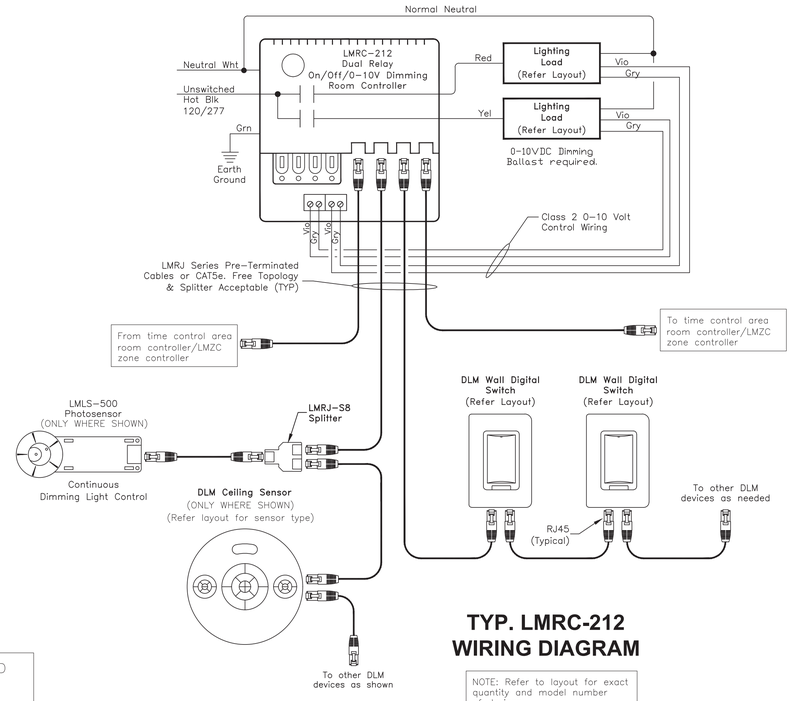

TYP. LMRC-212 WIRING DIAGRAM

NOTE: Refer to layout for exact quantity and model number of devices.

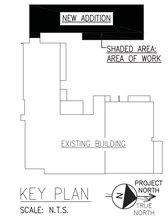

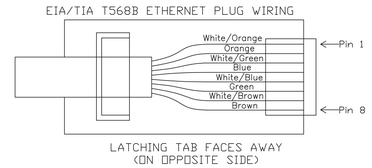

CAT5E WIRING DIAGRAM

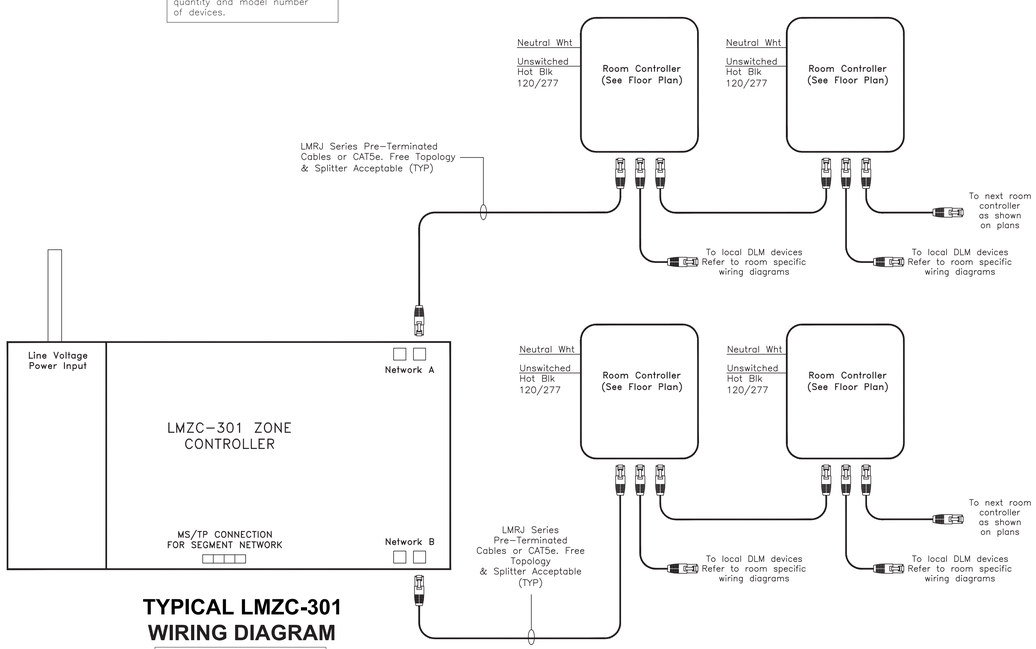

TYPICAL LMZC-301 WIRING DIAGRAM

NOTE: Refer to layout for exact quantity and model number of devices.

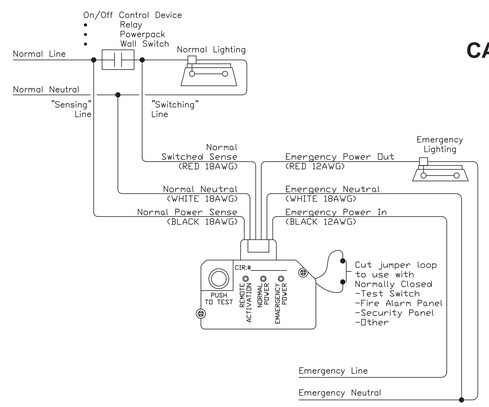

ELCU-200 TYPICAL WIRING DIAGRAM

PROVIDE ELCU-200 ONLY WHERE SHOWN ON FLOOR PLANS

1	ISSUED FOR BUILDING DEPARTMENT FILING & BIDDING	04-28-2025

ORANGE AND ROCKLAND UTILITIES, INC.
SPRING VALLEY NEW YORK

Omdex Incorporated Consulting Engineers
21 Cross Avenue
Midland Park, NJ 07432-1811
(201) 444-0753 FAX (201) 444-0839

STATE OF NEW YORK · BRIAN W. PASECHNICK · No. 081385 · LICENSED PROFESSIONAL ENGINEER
Brian W. Pasechnick, PE
NY #081385

SNS ARCHITECTS & ENGINEERS
tel: 201.573.1767
fax:201.573.0808
www.sns-arch-eng.com

DRAFTED: MJR
CHECKED: –
PROJ. NO: 5593
DATE: 08.11.2024

Lorin J. Sonenshine, AIA
Cert./Lic. No. NY 018401

ENGINEERING REVIEW		
DEPT.	SIGNATURE	DATE
CIVIL		
METERING		
RELAY		
TRANS. & SUB.		
DWN	DES	CHKD
DESIGN REVIEW		DATE

APPROVED
DATE
☐ INFORMATION
☐ COMMENTS
☐ BID
☐ CONSTRUCTION
☐ _____

LIGHTING DETAILS

SVOC NEW OFFICE ADDITION
TAX MAP ID 56.52-1-2
390 WEST ROUTE 59
VILLAGE OF SPRING VALLEY
TOWN OF RAMAPO
ROCKLAND COUNTY, NEW YORK

SCALE	FILE NO.	DRAWING NUMBER	SHEET	REV.
AS NOTED		E-502	76 OF 95	

VILLAGE OF SPRING VALLEY — ROCKLAND COUNTY, NEW YORK

SNS Architects & Engineers, PC
ONE PARAGON DRIVE . MONTVALE . NEW JERSEY . 07645
John Lignos, AIA
Lorin J. Sonenshine, AIA
Steven Napolitano, PE, PP
Robert Nocella, AIA

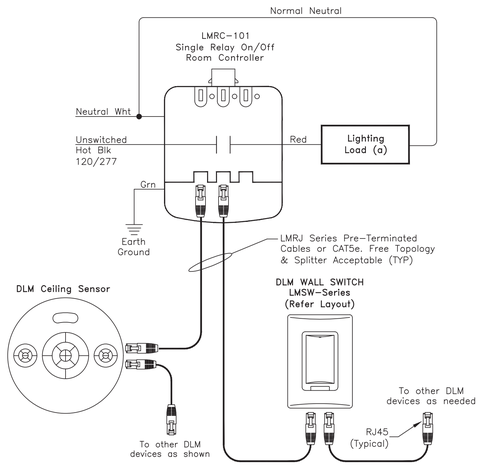

TYP. LMRC-101
WIRING DIAGRAM

NOTE: Refer to layout for exact quantity and model number of devices.

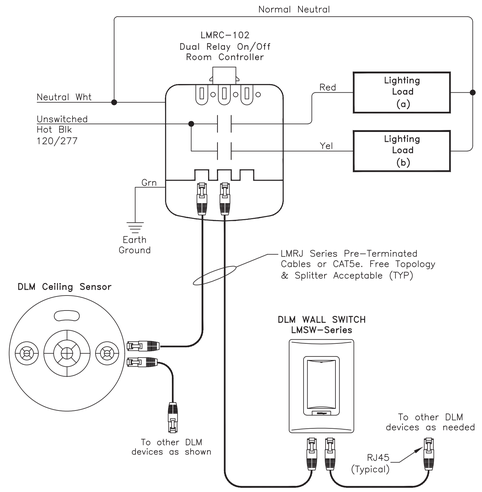

TYP. LMRC-102
WIRING DIAGRAM

NOTE: Refer to layout for exact quantity and model number of devices.

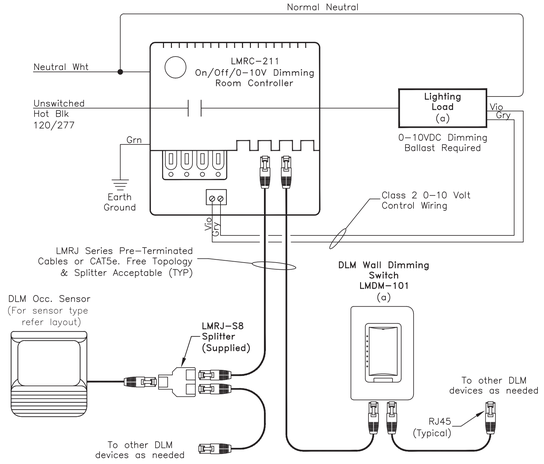

TYP. LMRC-211
WIRING DIAGRAM

NOTE: Refer to layout for exact quantity and model number of devices.

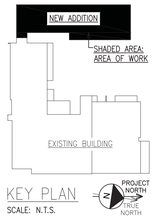

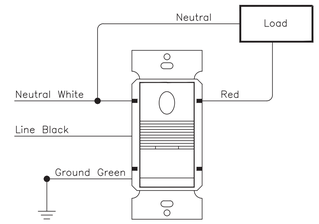

PW-101
WIRING DIAGRAM

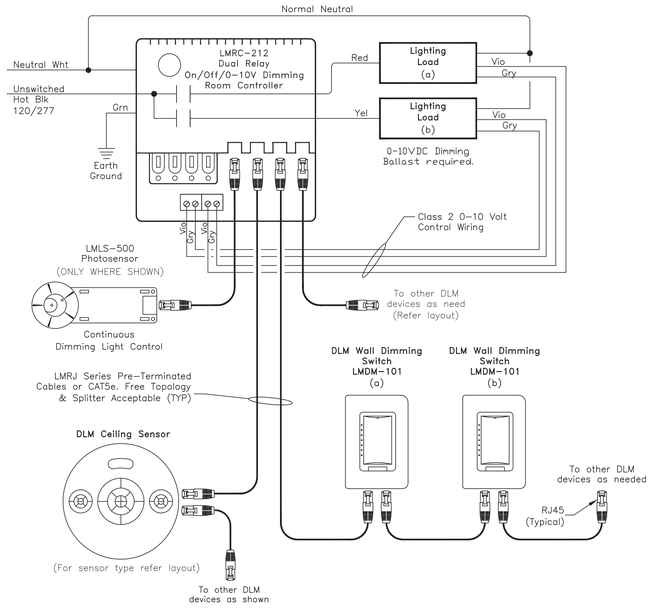

TYP. LMRC-212
WIRING DIAGRAM

NOTE: Refer to layout for exact quantity and model number of devices.

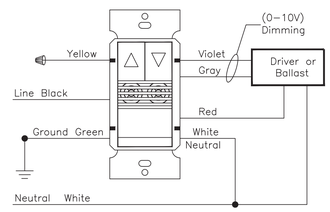

DW-311
WIRING DIAGRAM

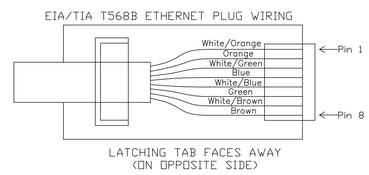

CAT5E WIRING DIAGRAM

1	ISSUED FOR BUILDING DEPARTMENT FILING & BIDDING	04-28-2025

ORANGE AND ROCKLAND UTILITIES, INC.
SPRING VALLEY NEW YORK

Omdex Incorporated
Consulting Engineers
21 Cross Avenue
Midland Park, NJ 07432-1811
(201) 444-0753 FAX (201) 444-0839

STATE OF NEW YORK · BRIAN W. PASECHNICK · No. 091385 · LICENSED PROFESSIONAL ENGINEER

Brian W. Pasechnick, PE
NY #91385

SNS ARCHITECTS & ENGINEERS
tel: 201.573.1767
fax:201.573.0808
www.sns-arch-eng.com

DRAFTED: MJR
CHECKED: –
PROJ. NO: 5593
DATE: 08.11.2024

Lorin J. Sonenshine, AIA
Cert./Lic. No. NY 018401

ENGINEERING REVIEW		
DEPT.	SIGNATURE	DATE
CIVIL		
METERING		
RELAY		
TRANS. & SUB.		
DWN	DES	CHKD
DESIGN REVIEW		DATE

APPROVED
DATE
☐ INFORMATION
☐ COMMENTS
☐ BID
☐ CONSTRUCTION
☐ _____

LIGHTING DETAILS

SVOC NEW OFFICE ADDITION
TAX MAP ID 56.52-1-2
390 WEST ROUTE 59
VILLAGE OF SPRING VALLEY
TOWN OF RAMAPO
ROCKLAND COUNTY, NEW YORK

SCALE	FILE NO.	DRAWING NUMBER	SHEET	REV.
AS NOTED		E-503	77 OF 95	

VILLAGE OF SPRING VALLEY ROCKLAND COUNTY, NEW YORK

SNS Architects & Engineers, PC
ONE PARAGON DRIVE . MONTVALE . NEW JERSEY . 07645
John Lignos, AIA
Lorin J. Sonenshine, AIA
Steven Napolitano, PE, PP
Robert Nocella, AIA

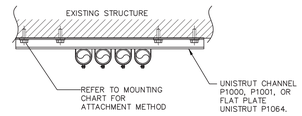

A	CONDUIT SUPPORT DETAIL
SCALE: NTS	

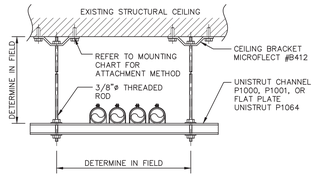

B	CONDUIT TRAPEZE DETAIL
N.T.S.	

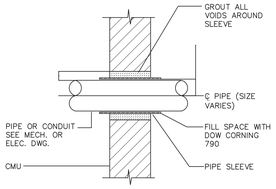

NOTES: (FOR FIRE-RATED WALL ONLY)
1. PIPE ANCHORAGE IS REQUIRED NEARBY TO PREVENT PIPE MOVEMENT THROUGH PENETRATION.
2. CABLES WITHIN CONDUIT PENETRATION SHALL BE FIRE SEALED AFTER INSTALLATION

C	WALL PENETRATION DETAIL
N.T.S.	

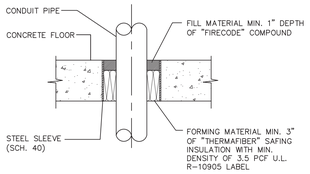

NOTE:
CONDUIT CORES SHALL BE LOCATED AT HOLLOW CELL OF PRECAST CONCRETE PANEL DO NOT CUT PRESTRESSING STRAND.

D	FLOOR PENETRATION DETAIL
N.T.S.	

1 CONDUIT DETAILS
N.T.S.

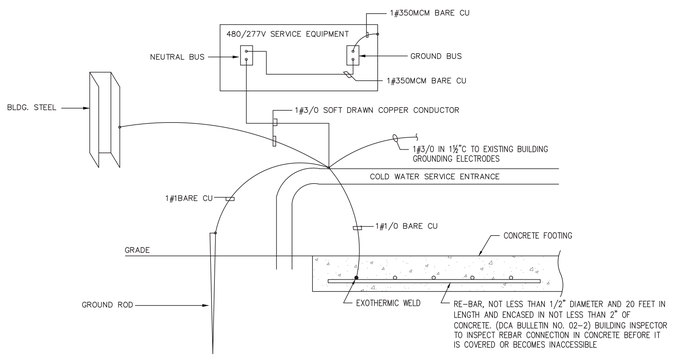

2 SERVICE GROUNDING DETAIL - EAST BUILDING
N.T.S.

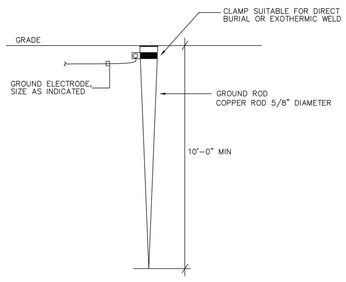

3 GROUND ROD DETAIL
N.T.S.

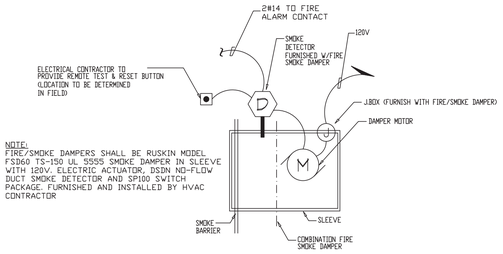

NOTE:
FIRE/SMOKE DAMPERS SHALL BE RUSKIN MODEL FSD60 TS-150 UL 555S SMOKE DAMPER IN SLEEVE WITH 120V. ELECTRIC ACTUATOR, DSDN NO-FLOW DUCT SMOKE DETECTOR AND SP100 SWITCH PACKAGE. FURNISHED AND INSTALLED BY HVAC CONTRACTOR

4 SMOKE DAMPER DETAIL
N.T.S.

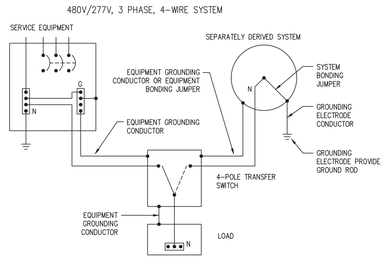

9 GENERATOR BONDING DETAIL - EAST BUILDING
N.T.S.

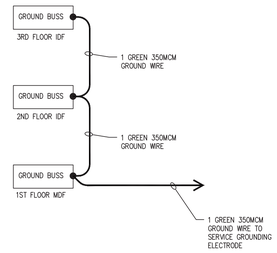

12 GROUND SYSTEM INFRASTRUCTURE DETAIL
N.T.S.

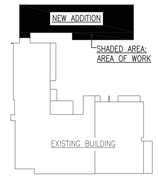

KEY PLAN
SCALE: N.T.S.

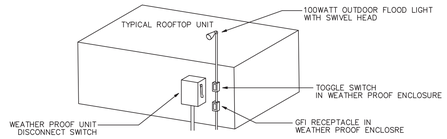

5 TYPICAL ROOF TOP UNIT DETAIL
N.T.S.

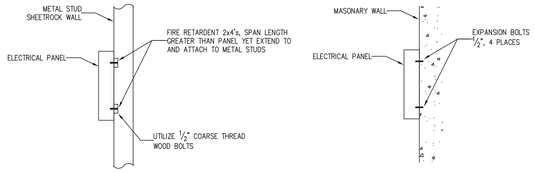

10 ELECTRICAL PANEL MOUNTING DETAILS
N.T.S.

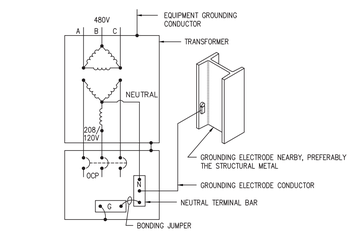

A GROUNDING ARRANGEMENT FOR A SEPARATELY DERIVED SYSTEM WHERE THE GROUNDING ELECTRODE CONDUCTOR CONNECTION IS MADE AT THE FIRST DISCONNECT.

6 TRANSFORMER GROUND DETAIL
N.T.S.

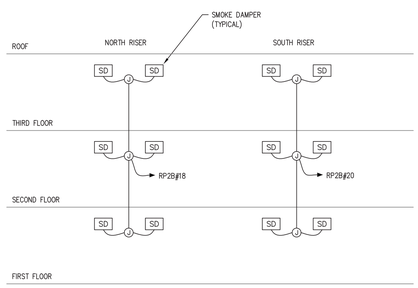

11 SMOKE DAMPER POWER RISER DIAGRAM
N.T.S.

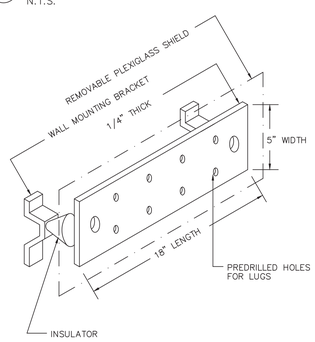

7 BUSS BAR DETAIL
N.T.S.

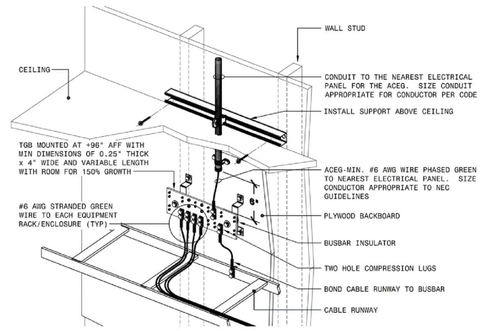

8 GROUND BUSS INSTALLATION DETAIL
N.T.S.

DSD FACTORY WIRED TO FSD WITH TS-150

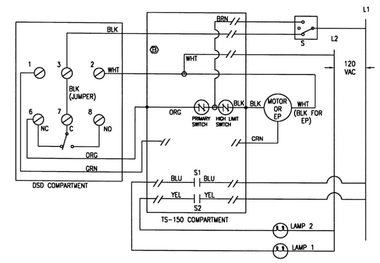

120 VAC

NOTES

1. NOT ALL SCREW TERMINALS # IN THE DSD COMPARTMENT ARE SHOWN, FOR CLARITY.
2. CONNECTORS BETWEEN SCREW TERMINALS 6, 7 & 8 ARE PRE-WIRED BY THE DSD MANUFACTURER. AT SMOKE CONDITION, CONTACT BETWEEN 6 & 7 BREAKS; CONTACT BETWEEN 7 & 8 MAKES.
3. THREE POSITION SWITCH "S" LAMP 1 AND LAMP 2 ARE BY DAMPER MANUFACTURER.
4. THESE WIRING DIAGRAMS APPLY TO MODEL DH-98 SMOKE DETECTOR (MADE BY HOCHIKI) WITH PHOTOELECTRIC DETECTOR HEAD.
5. // INDICATED CONNECTIONS NEEDED TO BE MADE IN THE FIELD BY QUALIFIED ELECTRICIAN.

SMOKE DAMPER WIRING DIAGRAM
NTS

1	ISSUED FOR BUILDING DEPARTMENT FILING & BIDDING	04-28-2025

ORANGE AND ROCKLAND UTILITIES, INC.
SPRING VALLEY NEW YORK

Omdex Incorporated Consulting Engineers
21 Cross Avenue
Midland Park, NJ 07432-1811
(201) 444-0753 FAX (201) 444-0839
Brian W. Pasechnick, PE
NY #91585

SNS ARCHITECTS & ENGINEERS
tel: 201.573.1767
fax:201.573.0808
www.sns-arch-eng.com
Lorin J. Sonenshine, AIA
Cert./Lic. No. NY 018401

DRAFTED: MJR
CHECKED:
PROJ. NO: 5593
DATE: 08.11.2024

ENGINEERING REVIEW		
DEPT.	SIGNATURE	DATE
CIVIL		
METERING		
RELAY		
TRANS. & SUB.		

APPROVED
DATE
☐ INFORMATION
☐ COMMENTS
☐ BID
☐ CONSTRUCTION
☐ _____

DSF

ELECTRICAL DETAILS

SVOC NEW OFFICE ADDITION
TAX MAP ID 56.52-1-2
390 WEST ROUTE 59
VILLAGE OF SPRING VALLEY
TOWN OF RAMAPO
ROCKLAND COUNTY, NEW YORK

DWN	DES	CHKD	SCALE	FILE NO.	DRAWING NUMBER	SHEET	REV.
DESIGN REVIEW		DATE	AS NOTED		E-601	78 OF 95	

VILLAGE OF SPRING VALLEY ROCKLAND COUNTY, NEW YORK

SNS Architects & Engineers, PC
ONE PARAGON DRIVE . MONTVALE . NEW JERSEY . 07645
John Lignos, AIA
Lorin J. Sonenshine, AIA
Steven Napolitano, PE, PP
Robert Nocella, AIA

ISSUE 4 | SPECIFICATIONS FOR ELECTRIC INSTALLATIONS | FIG. 3 SH. 3of4

SPECIFICATIONS & EXPLANATORY NOTES FOR TRANSFORMER INSTALLED AT GROUND LEVEL

7. CLEARANCES (CONTINUED)
   7. SIDE OF PAD AND ANY LOADING RAMP - FIFTY FEET (50'). SEE SKETCH E.
   8. SIDE OF PAD AND ANY RISER POLE - TEN FEET (10'). SEE SKETCH F.
   9. SIDES OF PAD AND ANY COMBUSTIBLE WALL OR OVERHANG - TEN FEET (10').
   10. SHRUBBERY SHALL NOT BE INSTALLED IN FRONT OF THE TRANSFORMER AND A MINIMUM CLEARANCE OF FOUR FEET (4') AWAY FROM LIMBS ON THE REMAINING THREE (3) SIDES.

B. O&R ENGINEERING DEPARTMENT WILL DETERMINE TRANSFORMER LOCATION WHEN EGRESS IS FROM AUDITORIUM OR PUBLIC BUILDING. ANY PROPOSED INSTALLATION WHICH THE O&R ENGINEERING DEPARTMENT DEEMS CONTROVERSIAL SHALL BE REFERRED TO THE PROPER FIRE INSPECTION AGENCY FOR APPROVAL BEFORE CONSTRUCTION. SEE THE FOLLOWING SKETCHES.

C. TRANSFORMER INSTALLATION IS NOT TO BE LOCATED: IN FRONT OF BUILDING DOORS, VENTILATION DUCTS OR ACCESS OPENINGS OR BENEATH BUILDING OVERHANG OR OVERHEAD WALKWAY.

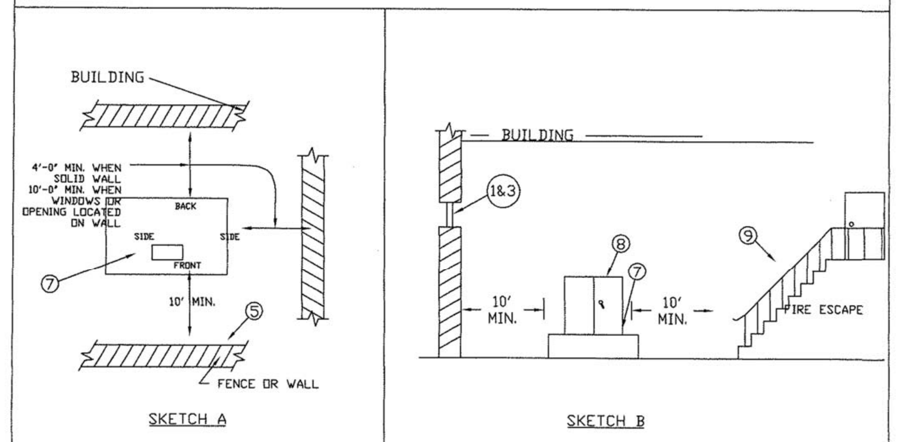

SKETCH A

SKETCH B

FIG 3 SH. 4of4 | SPECIFICATIONS FOR ELECTRIC INSTALLATIONS | ISSUE 1

SPECIFICATIONS & EXPLANATORY NOTES FOR TRANSFORMER INSTALLED AT GROUND LEVEL

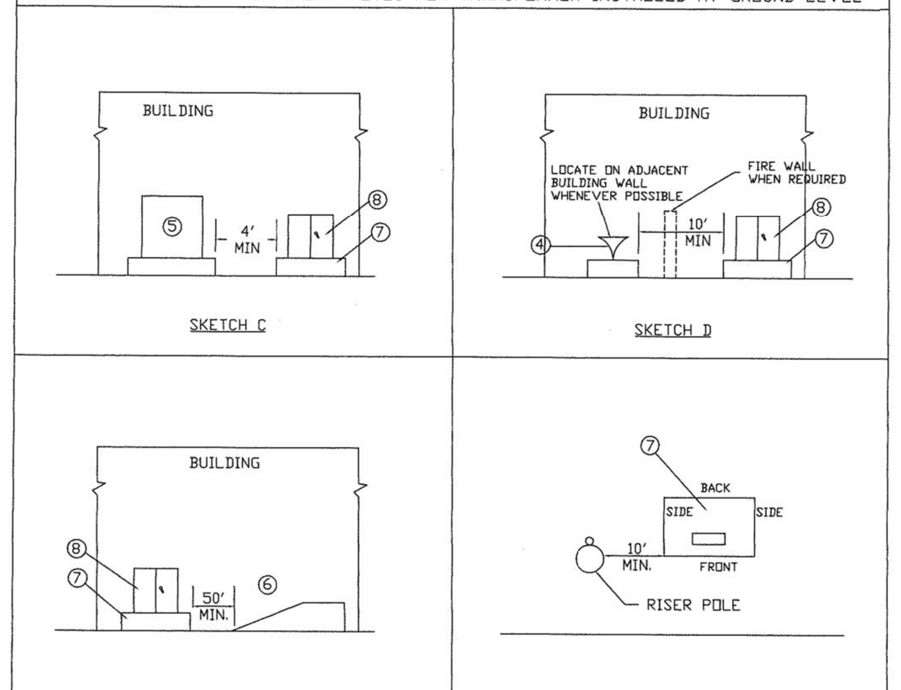

SKETCH C

SKETCH D

SKETCH E

SKETCH F

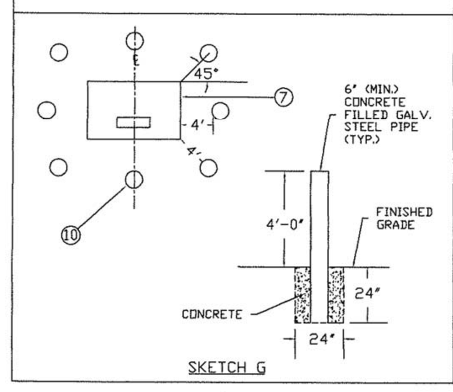

SKETCH G

LEGEND:

1. WINDOW
2. DOOR
3. VENTILATING INTAKE OR EXHAUST DUCT
4. GAS METERS AND/OR REGULATORS
5. EQUIPMENT
6. LOADING RAMPS
7. TRANSFORMER PAD
8. TRANSFORMER
9. FIRE ESCAPE
10. VEHICULAR BUMPER GUARDS (BOLLARDS)

ISSUE 4 | SPECIFICATIONS FOR ELECTRIC INSTALLATIONS | FIG. 4

THREE PHASE PADMOUNT TRANSFORMER CONCRETE PAD SPECIFICATIONS

NOTES:
1. SEE FIG. 3 FOR ADDITIONAL REQUIREMENTS, SPECS. AND CLEARANCE REQUIREMENTS.
2. OPENING TO BE D X F DIMENSIONS (AFTER FORM IS REMOVED).
3. CRUSHED STONE ±3'-0" BENEATH PAD.
4. 6" X 6" X 6/6 WIRE MESH.
5. NUMBER OF SECONDARY CONDUITS TO CUSTOMERS EQUIPMENT TO SUIT LOAD AND SITE CONDITIONS.
6. CONDUITS NOT TO EXTEND ABOVE PAD.
7. PAD SHALL BE LEVEL AND ALL EDGES CHAMFERED.
8. WHEN REQUIRED, TWO (2) PRIMARY CONDUITS IN THIS AREA.
9. SECONDARY CONDUITS NOT TO EXCEED 'I' DIMENSION.
10. PRIMARY CONDUITS SHALL BE WITHIN DIMENSION H.
11. ALL PAD DIMENSIONS ARE THE FINISHED PRODUCT, AFTER ALL FORMS ARE REMOVED.
12. WARNING: DO NOT PULL IN ANY PRIMARY OR SECONDARY WIRES. YOU MUST WAIT FOR THE TRANSFORMER TO BE DELIVERED.

PAD DIMENSIONS

TRANSFORMER SIZE-KVA	A	B	C	D	E	F	G	H	I
75-500	8'-6"	7'-3"	12"	13"	16"	42"	24"	12"	18"
750-1000	9'-0"	7'-8"	12"	18"	10"	42"	30"	12"	24"
1500-2500	11'-0"	9'-2"	18"	18"	10"	42"	42"	12"	24"

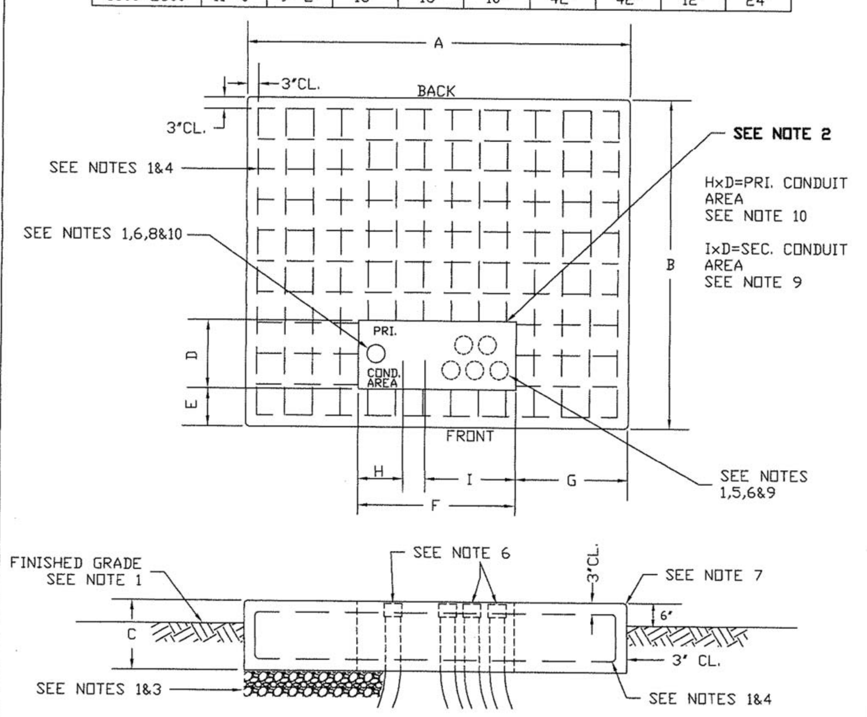

FIG. 5 | SPECIFICATIONS FOR ELECTRIC INSTALLATIONS | ISSUE 4

PADMOUNT EQUIPMENT GROUND GRID

NOTES:
1. SEE FIG. 3 AND SEC. VIII, PAGE 8 OF TEXT FOR ADDITIONAL REQUIREMENTS AND SPECIFICATIONS.
2. TO TRANSFORMER OR EQUIPMENT GROUND PADS.
3. COPPERCLAD GROUND ROD - 5/8" NOMINAL DIAMETER X 8' LONG.
4. WHEN TWO OR MORE PIECES OF EQUIPMENT ARE INSTALLED WITHIN 10 FT. OF EACH OTHER, ALL GROUND GRIDS MUST BE BONDED TOGETER WITH COMPANY AND N.E.C. APPROVED CONNECTORS.

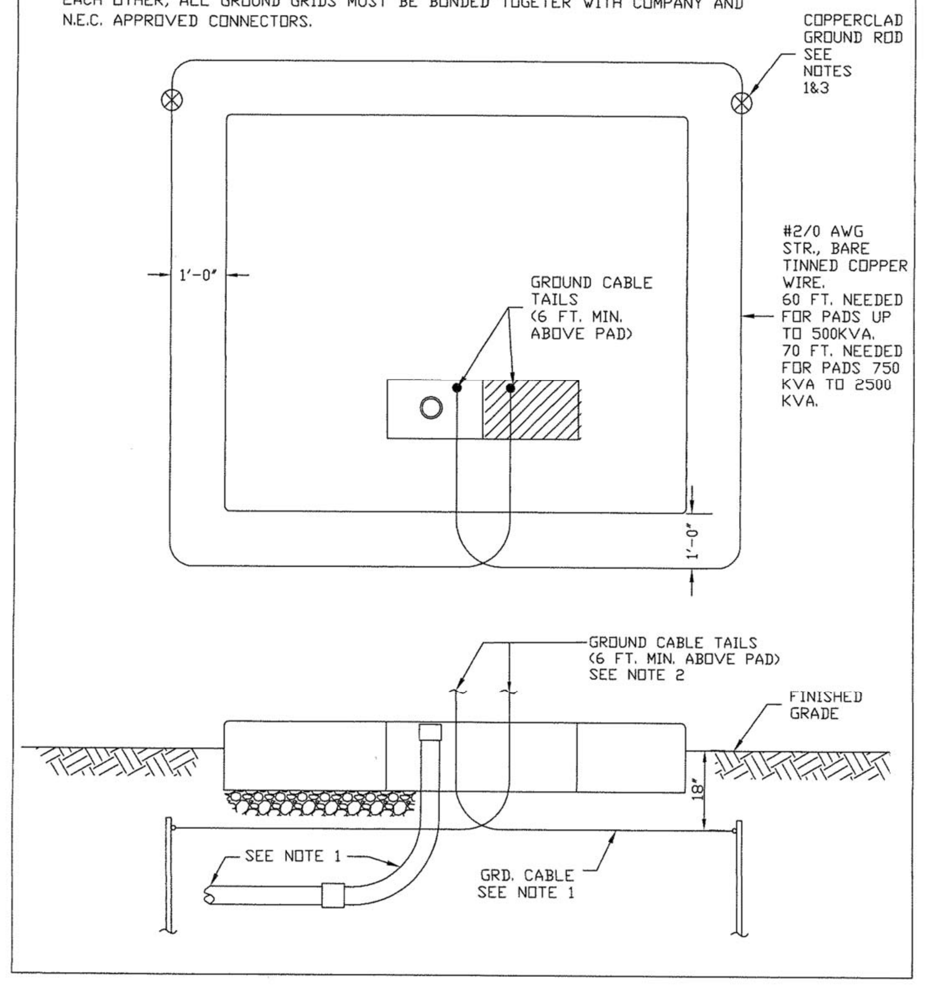

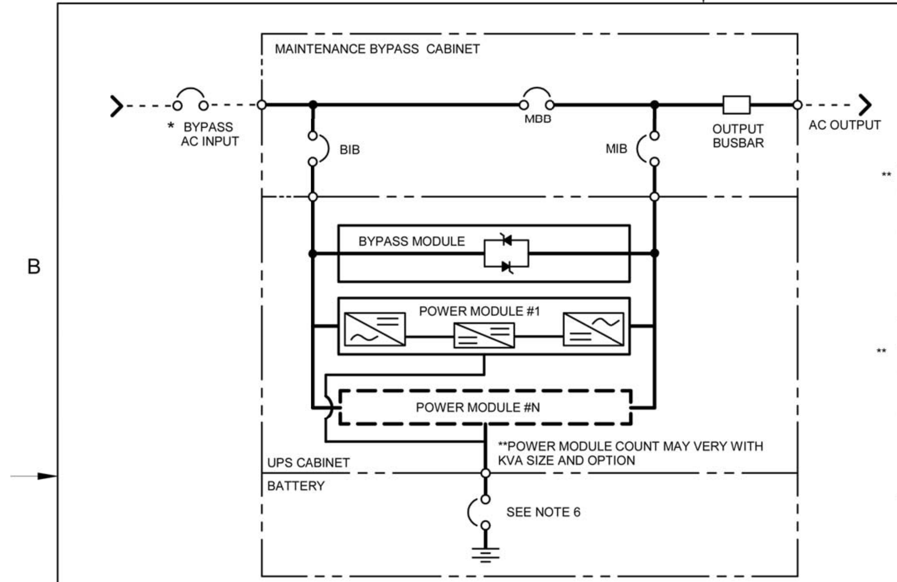

**

60/120kVA FRAME		POWER MODULE COUNT	WITH OPTIONAL REDUNDANCY
kVA CAPACITY			
208VAC	400/480VAC		
10, 15	20, 30	1	ADD 1 TO POWER MODULE COUNT
20, 25, 30	40, 50, 60	2	
40, 45	80, 90	3	
50, 60	100,120	4	

**

150/300kVA FRAME		POWER MODULE COUNT	WITH OPTIONAL REDUNDANCY
kVA CAPACITY			
208VAC	400/480VAC		
60	120	2	ADD 1 TO POWER MODULE COUNT
75, 80, 90	150, 180	3	
100, 120	200, 225, 240	4	
140, 150	250, 300	5	

NOTES:
1. INSTALL IN ACCORDANCE WITH NATIONAL AND LOCAL ELECTRICAL CODES.
2. INPUT AND BYPASS MUST SHARE THE SAME SINGLE SOURCE.
3. FOR 4 WIRE CONFIGURATIONS A NEUTRAL IS REQUIRED FROM THE SYSTEM AC INPUT SOURCE. A FULL CAPACITY NUETRAL CONDUCTOR IS RECOMMENDED. GROUNDING CONDUCTORS ARE RECOMMENDED.
4. BYPASS AND RECTIFIER INPUTS AND OUTPUT CABLES MUST BE RUN IN SEPARATE CONDUITS.
5. CONTROL WIRING MUST BE RUN IN SEPARATE CONDUITS.
6. BATTERIES MAY BE INTERNAL DEPENDING ON SELECTED OPTIONS. BATTERY BREAKERS ARE SUPPLIED FOR BOTH INTERNAL AND EXTERNAL VERTIV SUPPLIED BATTERY OPTIONS.
7. UPS MUST BE CONFIGURED AS 4 WIRE FOR 208V OPERATION AND CAN BE CONFIGURED AS 3 OR 4 WIRE FOR 400V AND 480V OPERATION.
8. GROUNDING CONDUCTORS ARE REQUIRED.

RIB - RECTIFIER INPUT BREAKER
BIB - BYPASS ISOLATION BREAKER
MBB - MAINTENANCE BYPASS BREAKER
MIB - MAINTENANCE ISOLATION BREAKER
* EXTERNAL OVERCURRENT PROTECTION BY OTHERS

- - - - FIELD SUPPLIED WIRING

SHEET NO. 1 OF 1	DRAWN BY: SHANKAR SUTAR	© 2020 VERTIV GROUP CORPORATION CONFIDENTIAL AND PROPRIETARY. ALL RIGHTS RESERVED. VERTIV AND THE VERTIV LOGO ARE TRADEMARKS OR REGISTERED TRADEMARKS OF VERTIV GROUP CORPORATION. THIS DOCUMENT (AND THE INFORMATION IT CONTAINS) ARE THE PROPERTY OF VERTIV GROUP CORPORATION. BY ACCEPTING IT INTO YOUR POSSESSION, YOU AGREE THAT YOU WILL KEEP THIS DOCUMENT AND ALL INFORMATION CONTAINED HEREIN IN STRICTEST CONFIDENCE AND WILL NOT COPY, RETRANSMIT, USE (EXCEPT SOLELY FOR THE BENEFIT OF VERTIV GROUP CORPORATION), SELL, LEND, OR OTHERWISE DISPOSE OF SAME, DIRECTLY OR INDIRECTLY, WITHOUT THE EXPRESS WRITTEN PERMISSION OF VERTIV GROUP CORPORATION, AND THIS DOCUMENT SHALL BE RETURNED TO VERTIV GROUP CORPORATION IMMEDIATELY UPON REQUEST.	DWG. NO. AP2-01-S018	VERTIV
CO. NO. -	DESIGNED BY: CHRIS PARKISON	TITLE: ONE-LINE DIAGRAM, SIGNAL INPUT, 10-300kVA, WITH 3 BREAKER MAINTENANCE BYPASS CABINET, VERTIV LIEBERT APM2	DATE (LATEST REV.) 05/28/2024	
REF DWG. -	APPROVED BY: CHRIS PARKISON		REVISION 0 / 505 N. CLEVELAND AVE WESTERVILLE, OHIO 43082	

FORM NO. DPN004659 REV - A

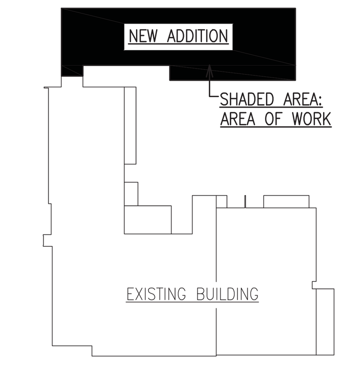

KEY PLAN
SCALE: N.T.S.

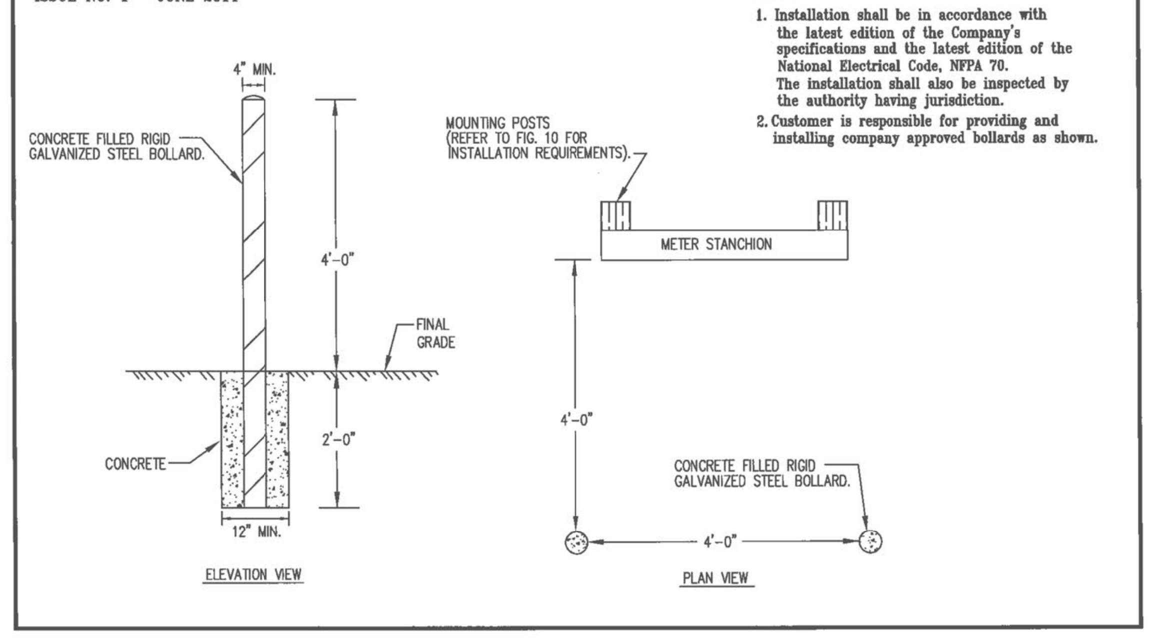

NOTES:
1. Installation shall be in accordance with the latest edition of the Company's specifications and the latest edition of the National Electrical Code, NFPA 70. The installation shall also be inspected by the authority having jurisdiction.
2. Customer is responsible for providing and installing company approved bollards as shown.

FIG. 10A - BOLLARD DETAIL FOR PERMANENT METER SERVICE

NOTE: CALL BEFORE YOU DIG. SEE PREFIX PAGE iv FOR THE UNDERGROUND MARK OUT NUMBER IN YOUR AREA.

1	ISSUED FOR BUILDING DEPARTMENT FILING & BIDDING	04-28-2025

ORANGE AND ROCKLAND UTILITIES, INC.
SPRING VALLEY NEW YORK

Omdex Incorporated Consulting Engineers
21 Cross Avenue
Midland Park, NJ 07432-1811
(201) 444-0753 FAX (201) 444-0839

STATE OF NEW YORK — BRIAN W. PASECHNICK — NO. 91385 — LICENSED PROFESSIONAL ENGINEER
Brian W. Pasechnick, PE
NY #91385

SNS ARCHITECTS & ENGINEERS
tel: 201.573.1767
fax:201.573.0808
www.sns-arch-eng.com

DRAFTED: MJR
CHECKED: –
PROJ. NO: 5593
DATE: 08.11.2024

Lorin J. Sonenshine, AIA
Cert./Lic. No. NY 018401

ENGINEERING REVIEW		
DEPT.	SIGNATURE	DATE
CIVIL		
METERING		
RELAY		
TRANS. & SUB.		

DWN | DES | CHKD
DESIGN REVIEW | DATE

APPROVED
DATE

- ☐ INFORMATION
- ☐ COMMENTS
- ☐ BID
- ☐ CONSTRUCTION
- ☐ ________

ELECTRICAL DETAILS

SVOC NEW OFFICE ADDITION
TAX MAP ID 56.52-1-2
390 WEST ROUTE 59
VILLAGE OF SPRING VALLEY
TOWN OF RAMAPO
ROCKLAND COUNTY, NEW YORK

SCALE	FILE NO.	DRAWING NUMBER	SHEET	REV.
AS NOTED		E-602	79 OF 95	

VILLAGE OF SPRING VALLEY — ROCKLAND COUNTY, NEW YORK

SNS Architects & Engineers, PC
ONE PARAGON DRIVE . MONTVALE . NEW JERSEY . 07645
- John Lignos, AIA
- Lorin J. Sonenshine, AIA
- Steven Napolitano, PE, PP
- Robert Nocella, AIA

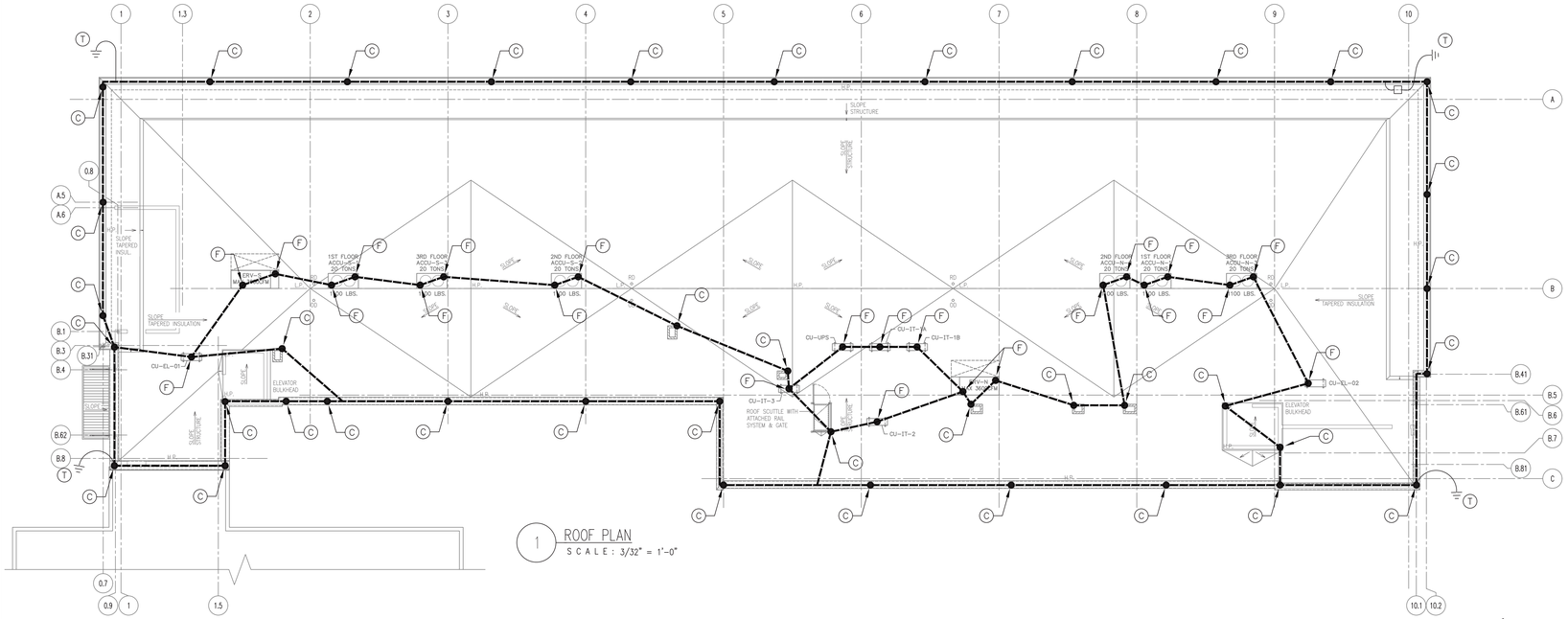

1 ROOF PLAN
SCALE: 3/32" = 1'-0"

NOTE: INSTALLING CONTRACTOR TO FIELD VERIFY LOCATION OF ROOF LOCATED EXHAUST FANS, FLUES, GOOSENECKS, CHILLERS, VENTILATOR HOODS, AND SIMILAR MECHANICAL EQUIPMENT. IF NOT UNDER ZONE OF PROTECTION PROVIDE WITH AIR TERMINALS AS SHOWN PER DETAILS "GG", AND "HH".

NOTE: INSTALLING CONTRACTOR TO FIELD VERIFY LOCATION BONDING OF SMALL ROOF MOUNTED METALLIC BODIES OF INDUCTANCE; VENT PIPE, ROOF DRAIN, FLASHING, ROOF DAVIT, ETC., WITHIN 6'-0" OF A LIGHTNING PROTECTION COMPONENT OR BONDED METALLIC BODY AS SHOWN PER DETAIL "Z". ALSO FIELD VERIFY BONDING OF METALLIC SERVICE LINES; WATER, SEWER, GAS, TELEPHONE, ELECTRICAL, ETC., ENTERING THE STRUCTURE PER GENERAL NOTES "I1" AND "I5" AND AS SHOWN PER DETAILS "CC",AND "DD"

NOTE: THE DESIGN LAYOUT AND INSTALLATION PROCEDURES SHOWN FOR THE BUILDING LIGHTNING PROTECTION SYSTEM AND THE COMPONENT PARTS, SHOWN HEREON ARE ILLUSTRATED AS A STANDARD OF QUALITY AS MANUFACTURED BY AC ERICO – MANUFACTURING MEMBER OF THE LIGHTNING PROTECTION INSTITUTE – P.O. BOX 329, 2100 EAST FIRST STREET, MARYVILLE, MO 64468, PHONE: 800–821–5575, FAX: 660–562–2932

LEGEND	
●	AIR TERMINAL LOCATION
	THRU–ROOF CABLE PENETRATION
	THRU–WALL LOCATION
△	JUNCTION BOX WITHIN DRIVING DECK
	GROUND ROD LOCATION
	NO. LP–C126 COPPER CABLE, U.L. LABELED, 28 ST., 14 GA., 380 LBS./1,000 FT., 115,080 CM. (MIN. CLASS II CABLE).
	NO. LP–C120 COPPER CABLE, U.L. LABELED, 29 ST., 17 GA., 192 LBS./1,000 FT., 59,450 CM. (#2 AWG).
	NO. LP–C126 COPPER GROUND LOOP CONDUCTOR, AND INTERMEDIATE GROUND LOOP CONDUCTOR,28 ST., 14 GA., 380 LBS./ 1,000 FT., 115,080 CM. (MIN. CLASS II CABLE).

GENERAL INSTALLATION NOTES

1	SEAL ENDS OF CONDUIT MOISTURE TIGHT WITH DUCT SEAL OR LEAD WEDGE.
2	ALL CONDUIT, CONDUIT FASTENERS AND MISCELLANEOUS ACCESSORIES SHALL BE FURNISHED AND INSTALLED BY THE ELECTRICAL CONTRACTOR.
3	METAL BODIES OF INDUCTANCE LOCATED ABOUT THE ROOF SUCH AS; METAL FLASHING, GRAVEL STOPS, ROOF DRAINS, SOIL PIPE VENTS, INSULATION VENTS, LOUVERS AND DOOR FRAMES SITUATED WITHIN 6'–0" OF A LIGHTNING CONDUCTOR OR BONDED METAL BODY SHALL BE INTERCONNECTED TO THE LIGHTNING CONDUCTOR SYSTEM.
4	NO BEND OF A CONDUCTOR SHALL FORM A FINAL INCLUDED ANGLE OF LESS THAN 90° NOR SHALL HAVE A RADIUS OF BEND OF LESS THAN 8".
5	CONDUCTORS SHALL INTERCONNECT ALL AIR TERMINALS AND SHALL FORM A TWO–WAY PATH FROM EACH AIR TERMINAL HORIZONTALLY OR DOWNWARD TO CONNECTIONS WITH GROUND TERMINALS.
6	ALL LIGHTNING PROTECTION CONDUCTORS SHALL BE FASTENED NOT MORE THAN 3'–0" MAXIMUM SPACING.
7	CONNECTIONS TO GROUND ROD OR GROUND LOOP CONDUCTOR SHALL BE MADE AT A POINT NOT LESS THAN 30" BELOW GRADE AND 2'–0" AWAY FROM FOUNDATION WALL.
8	ACTUAL JOB–SITE CONDITIONS MAY NECESSITATE SLIGHT ALTERATIONS IN AIR TERMINAL AND GROUND ROD LOCATIONS.
9	AIR TERMINALS SHALL BE PLACED AT ALL UNPROTECTED OUTSIDE CORNERS AND LOCATED INTERMEDIATELY ON 20'–0" MAXIMUM SPACING AROUND THE ROOF PERIMETER OR RIDGE AND WITHIN 2'–0" OF OUTSIDE EDGE.
10	MIDROOF AIR TERMINALS SHALL BE PLACED ON 50'–0" MAXIMUM SPACING.
11	BOND ALL METALLIC PIPES INCLUDING WATER, FIRE, GAS, SEWER, STORM, ETC. WHICH ENTER THE STRUCTURE TO THE NEAREST DOWNLEAD, GROUND ROD OR GROUND LOOP.
12	BARE COPPER LIGHTNING PROTECTION MATERIALS SHALL NOT BE INSTALLED ON ALUMINUM ROOF OR SIDING OR OTHER ALUMINUM SURFACES AND VICE VERSA. ALUMINUM LIGHTNING PROTECTION MATERIALS SHALL NOT BE INSTALLED ON COPPER ROOFING OR COPPER SIDING OR OTHER COPPER SURFACES.
13	FOR SAKE OF CLARITY, WE HAVE NOT LABELED EACH INDIVIDUAL ITEM OF LIGHTNING PROTECTION MATERIALS ON THE ROOF PLAN. WE HAVE SHOWN INSTALLATION DETAILS AND HAVE CALLED OUT EACH OF THESE DETAILS ON THE ROOF PLAN ONLY AT RANDOM LOCATIONS.
14	THE LIGHTNING PROTECTION SYSTEM SHALL BE INSTALLED IN A NEAT AND INCONSPICUOUS MANNER SO THAT ALL COMPONENTS WILL BLEND IN WITH THE APPEARANCE OF THE BUILDING.
15	ALL ADHESIVE TYPE FITTINGS SHALL BE SET IN PLACE WITH AN APPLICATION OF COMPATIBLE ROOF CEMENT, A/C NO. P899LN OR NO. P899R ADHESIVE COMPOUND BEFORE ROOF GRAVEL IS APPLIED.
16	TELEPHONE AND/OR ELECTRICAL SERVICE ENTRANCE GROUNDS SHALL BE INTERCONNECTED TO ONE LIGHTNING PROTECTION GROUND OR WATER PIPE.
17	FURNISH & INSTALL ARRESTERS ON ELECTRICAL PANEL, DATA AND TELEPHONE LINE ENTRANCES
18	THE DESIGN LAYOUT AND INSTALLATION DETAILS SHOWN HEREON SHALL MEET THE REQUIREMENTS OF UNDERWRITERS' LABORATORIES STANDARD 96A FOR MASTER LABELED LIGHTNING PROTECTION SYSTEMS. THE ACTUAL MASTER LABEL WILL BE DELIVERED UPON COMPLETION OF INSTALLATION.
19	THE LIGHTNING PROTECTION INSTALLATION SHALL COMPLY IN ALL RESPECTS TO LIGHTNING PROTECTION INSTITUTE STANDARD 175. THE INSTALLATION SHALL BE MADE BY OR UNDER THE SUPERVISION OF AN L.P.I. CERTIFIED MASTER INSTALLER. THE COMPLETED INSTALLATION WILL RECEIVE SYSTEM CERTIFICATION SUBMITTAL FORM LPI 176.
20	THE DESIGN LAYOUT AND INSTALLATION DETAILS SHOWN HEREON SHALL MEET THE REQUIREMENTS OF NATIONAL FIRE PROTECTION ASSOCIATION STANDARD #780, CURRENT EDITION.

KEY PLAN
SCALE: N.T.S.

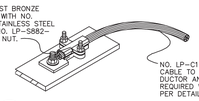

AA TYP. EQUIP. FRAME BOND
NOT TO SCALE

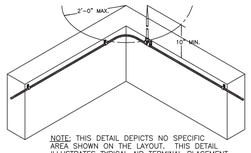

NOTE: THIS DETAIL DEPICTS NO SPECIFIC AREA SHOWN ON THE LAYOUT. THIS DETAIL ILLUSTRATES TYPICAL AIR TERMINAL PLACEMENT FOR EITHER PARAPETS OR FLAT ROOFS.

EE TYP. AIR TERMINAL PLACEMENT AT OUTSIDE CORNERS
NOT TO SCALE

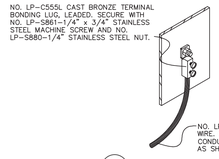

X MISC. SECONDARY BOND
NOT TO SCALE

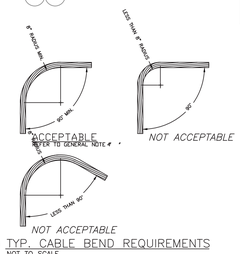

FF TYP. CABLE BEND REQUIREMENTS
NOT TO SCALE

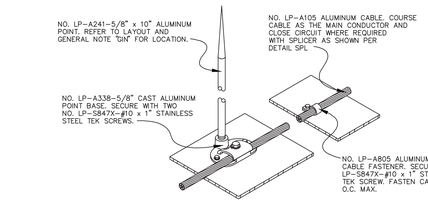

F EQUIP. AIR TERMINAL
NOT TO SCALE

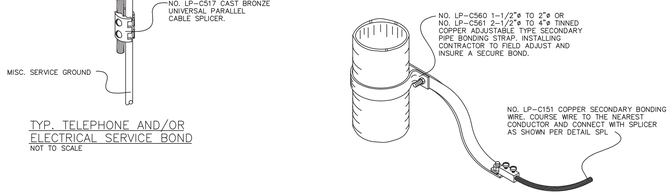

TYP. TELEPHONE AND/OR ELECTRICAL SERVICE BOND
NOT TO SCALE

Z TYP. PIPE BONDING STRAP AT ROOF
NOT TO SCALE

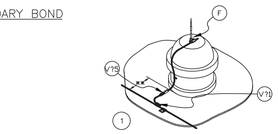

*NOTE: PER NFPA, WHERE ONLY ONE STRIKE TERMINATION DEVICE IS REQUIRED ON A CHIMNEY OR VENT, AT LEAST ONE MAIN SIZED CON–DUCTOR SHALL CONNECT THE STRIKE TERMINATION DEVICE TO A MAIN CONDUCTOR AT THE LOCATION WHERE THE CHIMNEY OR VENT MEETS THE ROOF SURFACE AND PROVIDES TWO OR MORE PATHS TO GROUND FROM THAT LOCATION IN ACCORDANCE WITH SECTION 3–9 AND 3–9.2.

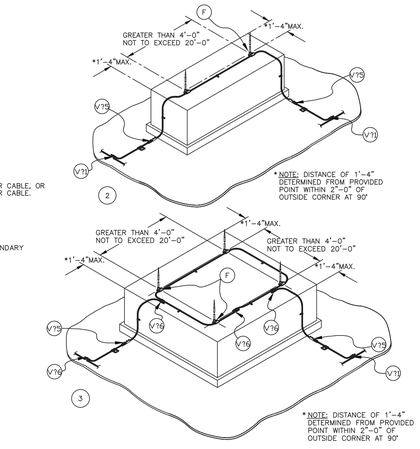

WARNING NOTE

IT IS THE RESPONSIBILITY OF THE LIGHTNING PROTECTION INSTALLER TO COORDINATE WITH THE MECHANICAL EQUIPMENT CONTRACTOR AND FIELD VERIFY APPROVED LOCATIONS PRIOR TO INSTALLATION OF LIGHTNING PROTECTION COMPONENT FASTENERS FOR ANY DRILLING OR PUNCHING OF HOLES WHICH MAY BE REQUIRED FOR INSTALLATION OF FASTENERS, SO AS NOT TO DAMAGE INTERNAL PIPING SYSTEMS, WIRING SYSTEMS OR THE OPERATION/FUNCTION OF THE EQUIPMENT.

GG SCHEMATIC VIEW
TYP. CABLE ROUTING AT EQUIP.
NOT TO SCALE

W TYP. FLASHING BOND
NOT TO SCALE

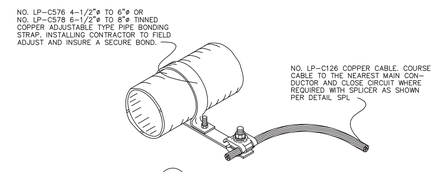

CC TYP. PIPE BONDING STRAP
NOT TO SCALE

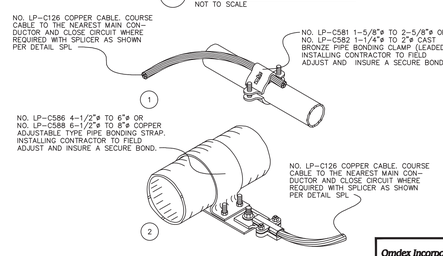

DD TYP. PIPE BONDING CLAMP
NOT TO SCALE

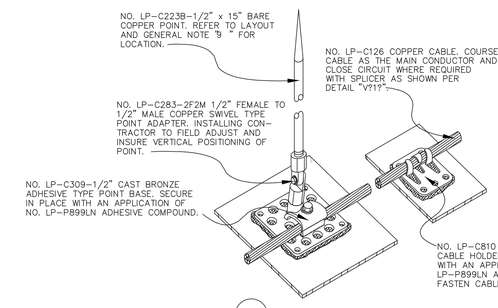

C METAL ROOF AIR TERMINAL
NOT TO SCALE

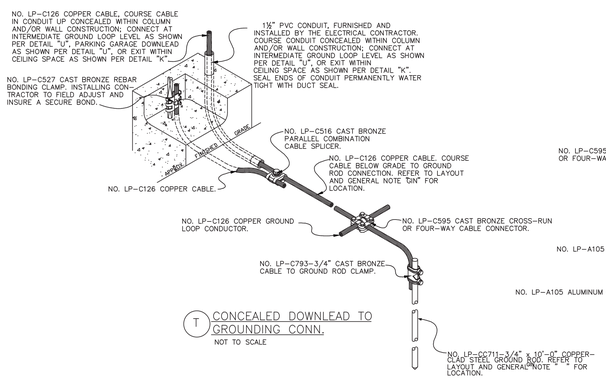

T CONCEALED DOWNLEAD TO GROUNDING CONN.
NOT TO SCALE

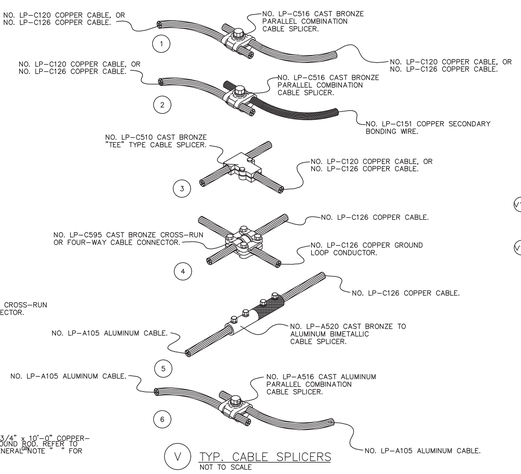

V TYP. CABLE SPLICERS
NOT TO SCALE

1	ISSUED FOR BUILDING DEPARTMENT FILING & BIDDING	04–28–2025

ORANGE AND ROCKLAND UTILITIES, INC.
SPRING VALLEY NEW YORK

Omdex Incorporated Consulting Engineers
21 Cross Avenue
Midland Park, NJ 07432–1811
(201) 444–0753 FAX (201) 444–0839
STATE OF NEW YORK · BRIAN W. PASECHNICK · LICENSED PROFESSIONAL ENGINEER · NO. 91385
Brian W. Pasechnick, PE
NY #091385

SNS ARCHITECTS & ENGINEERS
tel: 201.573.1767
fax:201.573.0808
www.sns–arch–eng.com
DRAFTED: MJR
CHECKED: –
PROJ. NO: 5593
DATE: 08.11.2024
Lorin J. Sonenshine, AIA
Cert./Lic. No. NY 018401

ENGINEERING REVIEW		
DEPT.	SIGNATURE	DATE
CIVIL		
METERING		
RELAY		
TRANS. & SUB.		

APPROVED
DATE
☐ INFORMATION
☐ COMMENTS
☐ BID
☐ CONSTRUCTION
☐ _____

ELECTRICAL LIGHTNING PROTECTION PLAN AND DETAILS

SVOC NEW OFFICE ADDITION
TAX MAP ID 56.52–1–2
390 WEST ROUTE 59
VILLAGE OF SPRING VALLEY
TOWN OF RAMAPO
ROCKLAND COUNTY, NEW YORK

DWN.	DES	CHKD	SCALE	FILE NO.	DRAWING NUMBER	SHEET	REV.
DESIGN REVIEW		DATE	AS NOTED		E–701	80 OF 95	

VILLAGE OF SPRING VALLEY — ROCKLAND COUNTY, NEW YORK

SNS Architects & Engineers, PC
ONE PARAGON DRIVE . MONTVALE . NEW JERSEY . 07645
John Lignos, AIA
Lorin J. Sonenshine, AIA
Steven Napolitano, PE, PP
Robert Nocella, AIA