WHITE PLAINS CITY SCHOOL DISTRICT

RENOVATIONS AT THE ROCHAMBEAU ALTERNATIVE HIGH SCHOOL

228 FISHER AVENUE
WHITE PLAINS, NEW YORK 10606

SED PROJECT CONTROL NUMBER 66-22-00-01-0-015-0020

CONTRACT G - GENERAL CONSTRUCTION AND ASBESTOS ABATEMENT WORK,
CONTRACT W - WINDOW REPLACEMENT WORK
CONTRACT M - MECHANICAL WORK,
CONTRACT P - PLUMBING WORK, CONTRACT E - ELECTRICAL WORK

ABBREVIATIONS

AB	Anchor Bolt	FIN	Finish
A/C	Air Conditioning	FR	Fire Retardant
ACI	American Concrete Institute	FTG	Footing
ACST	Acoustic	GA	Gauge
ACT	Acoustical Ceiling Tile	GWB	Gypsum Wall Board
ACU	Air Conditioning Unit	GYP	Gypsum
AD	Access Door	GYP. BD.	Gypsum Board
ADJ	Adjustable	HC	Handicapped
A/E	Architect/Engineer	HM	Hollow Metal
AFF	Above Finish Floor	HOR	Horizontal
ALUM	Aluminum	HW	Hot Water
ANCH	Anchor	INSUL	Insulation/Insulating
ANSI	American National Standards Institute	INT	Interior
APA	Access Panel	LAV	Lavatory
APPROX	Approximately	LDR	Leader
ASPH	Asphalt	LT	Light
ASTM	American Society for Testing & Materials	MAX	Maximum
AWS	American Welding Society	MECH	Mechanical
B	Fire Blanket	MISC	Miscellaneous
BAL	Balance	MO	Masonry Opening
BB	Bulletin Board	MR	Moisture Resistant
BD	Board	NIC	Not in Contract
BLDG	Building	NTS	Not to Scale
BLK	Block	OC	On Center
BLKG	Blocking	OD	Outside Diameter
BM	Beam	PLYWD	Plywood
B.O.	Bottom Of	PSF	Pounds per Square Foot
BOL	Bottom Of Lintel	PSI	Pounds per Square Inch
BOT	Bottom	PTD	Painted
CEIL	Ceiling	PVC	Polyvinyl Chloride
CEM	Cement	R	Radius or Riser
CER	Ceramic	RCP	Reflected Ceiling Plan
CLO	Closet	RD	Roof Drain
CMU	Concrete Masonry Unit	REINF	Reinforced
COL	Column	RM	Room
CONC	Concrete	RO	Rough Opening
CONST	Construction	SIM	Similar
CONT	Continuous	SPEC	Specifications
CORR	Corridor	SQ	Square
CPT	Carpet	SS	Stainless Steel
DS	Downspout	STL	Steel
DW	Dishwasher	TEMP	Temperature
DWG	Drawing	TER	Terrazzo
EA	Each	THK	Thick
EL	Elevation	TYP	Typical
ELEC	Electric/Electrical	UTIL	Utility
ELEV	Elevator	VB	Vapor Barrier
EP	Electrical Panel	VCT	Vinyl Composition Tile
EPY	Epoxy Coating	VERT	Vertical
EQ	Equal	VTR	Vent Thru Roof
EQUIP	Equipment	WC	Water Closet
EXIST	Existing	WH	Water Heater
EXST	Exhaust	WWF	Welded Wire Fabric
FAI	Fresh Air Intake		
F.C.	Fire Code		
FD	Floor Drain		

GENERAL NOTES

1. ALL WORK SHALL COMPLY WITH THE NEW YORK STATE FIRE PREVENTION AND BUILDING CODE AS WELL AS THE NEW YORK STATE EDUCATION DEPARTMENT MANUAL OF PLANNING STANDARDS.
2. ALL NOTES APPEARING HEREIN, WITH THOSE ON VARIOUS DRAWINGS SHALL APPLY TO ALL DRAWINGS AND FORM PART OF THE CONTRACT DOCUMENTS.
3. IT IS THE CONTRACTORS RESPONSIBILITY TO FIELD VERIFY ALL DIMENSIONS, SQUARE FOOTAGES, LOCATIONS AND QUANTITIES OF ALL ITEMS AND/OR SPACES WHETHER INDICATED IN THE DRAWINGS OR NOT.
4. DO NOT SCALE MEASURE ANY DRAWING. VERIFY THE FIGURES, DIMENSIONS AND DESIGN INTENTION SHOWN ON THE DRAWINGS BEFORE BEGINNING LAYOUT OF THE WORK AND REPORT ANY ERRORS, INACCURACIES, OR CONFLICTS TO THE ARCHITECT/ENGINEER IN WRITING BEFORE BEGINNING ANY WORK.
5. ALL WORK SHALL COMPLY WITH ALL APPLICABLE CODES, LAWS AND STATUTES AS REQUIRED. STRICTLY ADHERE TO MANUFACTURER'S PRINTED INSTRUCTIONS.
6. VERIFY EXACT LAYOUT COMPATIBILITY WITH ALL EXISTING CONDITIONS BEFORE BEGINNING WORK.
7. DISTURB ONLY THOSE AREAS OF THE SITE AFFECTED BY RENOVATION, UNLESS NOTED OTHERWISE. PROTECT ALL OTHER AREAS. CONTRACTORS SHALL BE RESPONSIBLE FOR ALL PATCH AND REPAIR OF EXISTING FINISHES WHICH ARE DAMAGED DURING CONSTRUCTION.
8. EACH CONTRACTOR SHALL COMPLY WITH THE REQUIREMENTS OF ANSI AND PROVIDE WHERE APPLICABLE ADA COMPLIANT BUILDING COMPONENTS.
9. THE OWNER RESUMES THE RIGHT AT ALL TIMES TO DELIVER, PLACE AND INSTALL EQUIPMENT AND FURNISHINGS AS THE WORK PROGRESSES SO LONG AS THERE IS NOT A CONFLICT WITH THE CONTRACTORS.
10. THE CONTRACTOR SHALL MAINTAIN AT THE SITE ONE RECORD COPY OF ALL DRAWINGS, SPECIFICATIONS AND APPROVED SHOP DRAWINGS AND APPROVED SAMPLES MARKED CURRENTLY TO RECORD ALL CHANGES DURING CONSTRUCTION.
11. ANY CHANGES TO THE SCOPE OF WORK OR IN THE CONSTRUCTION DETAILS, WHETHER DUE TO FIELD CONDITIONS OR OMISSION SHALL BE DOCUMENTED BY THE ARCHITECT PRIOR TO EXECUTION. ANY INCREASE OR DECREASE IN THE CONTRACT PRICE MUST BE APPROVED IN WRITING PRIOR TO EXECUTION.
12. THE SCOPE OF WORK FOR THIS PROJECT INCLUDES BUT IS NOT LIMITED TO THE WINDOW REPLACEMENTS THROUGHOUT THE ENTIRE BUILDING; RENOVATION OF ALL THE CLASSROOMS INCLUDING NEW CEILINGS, DOORS, AND CASEWORK; RENOVATION OF THE KITCHEN AND CAFETERIA; RENOVATION OF THE SCIENCE AND ART ROOM; VENTILATION, HEATING, AIR CONDITIONING, ELECTRICAL, AND LIGHTING WORK.

DRAWING LIST

INFORMATIONAL DRAWINGS (ALL CONTRACTS)
G000.00 GENERAL NOTES, MAPS, DRAWING LIST, STAGING PLAN, EXIT PLAN & LEGENDS
G100.00 EXISTING BASEMENT PLAN
G101.00 EXISTING GROUND FLOOR PLAN
G102.00 EXISTING FIRST FLOOR PLAN
G103.00 EXISTING SECOND FLOOR PLAN
G104.00 EXISTING THIRD FLOOR PLAN
G111.00 GROUND FLOOR CODE ANALYSIS
G112.00 FIRST FLOOR CODE ANALYSIS
G113.00 SECOND FLOOR CODE ANALYSIS

ASBESTOS ABATEMENT DRAWINGS
H001.00 ASBESTOS ABATEMENT GENERAL NOTES
H002.00 ASBESTOS ABATEMENT DESIGN TABLES
H003.00 ASBESTOS ABATEMENT GROUND FLOOR PLAN
H004.00 ASBESTOS ABATEMENT FIRST FLOOR PLAN
H005.00 ASBESTOS ABATEMENT SECOND FLOOR PLAN

ARCHITECTURE DRAWINGS
AD 101.00 GROUND FLOOR DEMOLITION PLAN
AD 102.00 FIRST FLOOR DEMOLITION PLAN
AD 103.00 SECOND FLOOR DEMOLITION PLAN
AD 104.00 ROOF DEMOLITION PLAN
A 000.00 PARTITION DETAILS
A 101.00 PROPOSED GROUND FLOOR PLAN
A 102.00 PROPOSED FIRST FLOOR PLAN
A 103.00 PROPOSED SECOND FLOOR PLAN
A 104.00 PROPOSED ROOF PLAN, CUPOLA ELEVATION, AND WINDOW TYPE
A 121.00 GROUND FLOOR REFLECTED CEILING PLAN
A 122.00 FIRST FLOOR REFLECTED CEILING PLAN
A 123.00 SECOND FLOOR REFLECTED CEILING PLAN
A 400.00 ENLARGED DEMOLITION AND PROPOSED SECOND FLOOR TOILET ROOM PLANS AND INTERIOR ELEVATIONS
A 401.00 ENLARGED DEMOLITION AND PROPOSED GROUND FLOOR TOILET ROOM PLANS AND INTERIOR ELEVATIONS
A 402.00 ENLARGED CLASSROOM AND ART ROOM PLAN AND INTERIOR ELEVATIONS
A 403.00 ENLARGED SCIENCE ROOM PLAN AND INTERIOR ELEVATIONS
A 500.00 WINDOW DETAILS
A 501.00 SKYLIGHT AND MISCELLANEOUS DETAILS
A 502.00 CASEWORK DETAILS
A 600.00 WINDOW TYPES
A 601.00 WINDOW SCHEDULE AND DETAILS
A 602.00 CASEWORK, FURNITURE, AND FINISH SCHEDULE

PLUMBING DRAWINGS
P 001.00 GENERAL NOTES, LEGEND, ABBREVIATIONS, AND SCHEDULES
PD 100.00 PLUMBING SECOND FLOOR OVERALL DEMOLITION PLAN
P 100.00 PLUMBING ENLARGEMENT PLANS AND RISERS

MECHANICAL DRAWINGS
M 000.00 MECHANICAL LEGENDS, SYMBOLS, ABBREVIATIONS, AND GENERAL NOTES
MD 110.00 MECHANICAL DEMO PLAN- GROUND FLOOR
MD 120.00 MECHANICAL DEMO PLAN- FIRST FLOOR
MD 130.00 MECHANICAL DEMO PLAN- SECOND FLOOR
MD 140.00 MECHANICAL DEMO PLAN- ROOF
M 110.00 MECHANICAL PLAN- GROUND FLOOR
M 120.00 MECHANICAL PLAN-FIRST FLOOR
M 130.00 MECHANICAL PLAN- SECOND FLOOR
M 140.00 MECHANICAL PLAN- ROOF
M 500.00 MECHANICAL DETAILS
M 501.00 MECHANICAL DETAILS
M 600.00 MECHANICAL SCHEDULES
M 601.00 MECHANICAL SCHEDULES

ELECTRICAL DRAWINGS
E 001.00 GENERAL NOTES AND LEGENDS
ED 101.00 GROUND FLOOR DEMOLITION PLAN
ED 102.00 FIRST FLOOR DEMOLITION PLAN
ED 103.00 SECOND FLOOR DEMOLITION PLAN
ED 105.00 ROOF LEVEL DEMOLITION PLAN
E 100.00 BASEMENT PROPOSED FLOOR PLAN
E 101.00 GROUND FLOOR PROPOSED PLAN
E 102.00 FIRST FLOOR PROPOSED PLAN
E 103.00 SECOND FLOOR PROPOSED PLAN
E 105.00 ROOF LEVEL PROPOSED PLAN
E 110.00 ELECTRICAL SITE PLAN
E 121.00 GROUND FLOOR LIGHTING PLAN
E 122.00 FIRST FLOOR LIGHTING PLAN
E 123.00 SECOND FLOOR LIGHTING PLAN
E 500.00 ELECTRICAL ONE LINE DIAGRAM
E 501.00 ELECTRICAL DETAILS
E 600.00 ELECTRICAL SCHEDULES
E 601.00 ELECTRICAL SCHEDULES

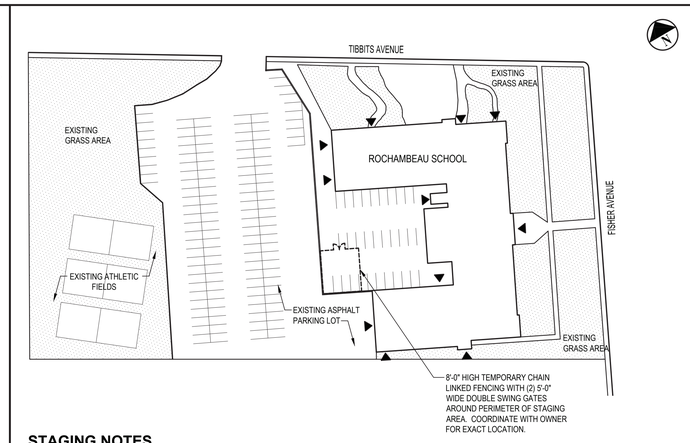

STAGING NOTES

1. POST SIGNS INDICATING CONSTRUCTION AREA AND CONSTRUCTION EMPLOYEE ENTRANCE.
2. CONSTRUCTION FENCE TO BE 8'-0" HIGH CHAIN LINK FENCE LOCATED A MINIMUM OF 15'-0" FROM ALL WINDOW OPENINGS. ALL GATES ARE TO BE LOCKED AT ALL TIMES, EXCEPT FOR WHEN A WORKER IS IN ATTENDANCE TO PREVENT UNAUTHORIZED ENTRY.
3. CONTRACTOR IS TO STAGE ON THE SITE IN SUCH A MANNER AS TO NOT BLOCK OR ENCROACH UPON EXISTING EXITS/ENTRANCES TO BUILDING, AND VEHICLE ACCESS.

SYMBOLS
▲ STAFF ENTRANCE / EGRESS

LOCATION MAPS

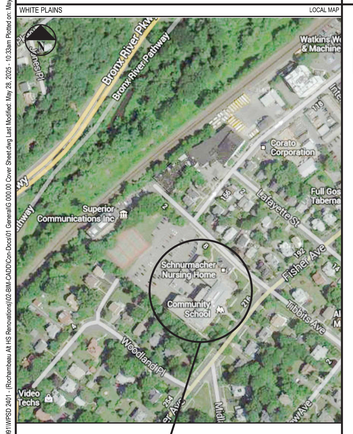

PROJECT SITE

SYMBOLS LEGEND

GYMNASIUM -	ROOM DESIGNATION
1 A5.0	SECTION MARK
1 A5.1	DETAIL SYMBOL
1 A4.0	ELEVATION KEY
C 101 A	INTERIOR ELEVATION REFERENCE
	ELEVATION LINE
3	REVISION
3	PARTITION TYPE
	GYPSUM
	CONCRETE
	AGGREGATE SUB-BASE
	EARTH
	BATT INSULATION
	PLYWOOD
	RIGID INSULATION
	STEEL
	WOOD
	WOOD BLOCKING

UNIFORM SAFETY STANDARDS - FOR SCHOOL CONSTRUCTION AND MAINTENANCE PROJECTS

1. "THE OCCUPIED PORTION OF ANY SCHOOL BUILDING SHALL ALWAYS COMPLY WITH THE MINIMUM REQUIREMENTS NECESSARY TO MAINTAIN A CERTIFICATE OF OCCUPANCY."
2. ALL SCHOOL AREAS TO BE DISTURBED DURING RENOVATION OR DEMOLITION HAVE BEEN TESTED FOR ASBESTOS AND SOME MATERIALS WERE FOUND TO BE POSITIVE. IF ENCOUNTERED, THE CONTRACTOR SHALL ABATE MATERIAL AS PER SPECIFICATION SECTION 020810 - ASBESTOS ABATEMENT, ALL TEST RESULTS CAN BE FOUND IN THIS SPECIFICATION SECTION.
3. "GENERAL SAFETY AND SECURITY STANDARDS FOR CONSTRUCTION PROJECTS:
   (1) ALL CONSTRUCTION MATERIALS SHALL BE STORED IN A SAFE AND SECURE MANNER.
   (2) FENCES AROUND CONSTRUCTION SUPPLIES OR DEBRIS SHALL BE MAINTAINED.
   (3) GATES SHALL ALWAYS BE LOCKED UNLESS A WORKER IS IN ATTENDANCE TO PREVENT UNAUTHORIZED ENTRY.
   (4) DURING EXTERIOR RENOVATION WORK, OVERHEAD PROTECTION SHALL BE PROVIDED FOR ANY SIDEWALKS OR AREAS IMMEDIATELY BENEATH THE WORK SITE OR SUCH AREAS SHALL BE FENCED OFF AND PROVIDED WITH WARNING SIGNS TO PREVENT ENTRY.
   (5) WORKERS SHALL BE REQUIRED TO WEAR PHOTO-IDENTIFICATION BADGES AT ALL TIMES FOR IDENTIFICATION AND SECURITY PURPOSES WHILE WORKING AT OCCUPIED SITES."
4. "SEPARATION OF CONSTRUCTION AREAS FROM OCCUPIED SPACES: CONSTRUCTION AREAS WHICH ARE UNDER THE CONTROL OF A CONTRACTOR AND THEREFORE NOT OCCUPIED BY DISTRICT STAFF OR STUDENTS SHALL BE SEPARATED FROM OCCUPIED AREAS. PROVISIONS SHALL BE MADE TO PREVENT THE PASSAGE OF DUST AND CONTAMINANTS INTO OCCUPIED PARTS OF THE BUILDING. PERIODIC INSPECTION AND REPAIRS OF THE CONTAINMENT BARRIERS MUST BE MADE TO PREVENT EXPOSURE TO DUST OR CONTAMINANTS. GYPSUM BOARD MUST BE USED IN EXIT WAYS OR OTHER AREAS THAT REQUIRE FIRE RATED SEPARATION. HEAVY DUTY PLASTIC SHEETING MAY BE USED ONLY FOR A VAPOR, FINE DUST OR AIR INFILTRATION BARRIER, AND SHALL NOT BE USED TO SEPARATE OCCUPIED SPACES FROM CONSTRUCTION AREAS.
   (1) A SPECIFIC STAIRWELL AND/OR ELEVATOR SHALL BE ASSIGNED FOR CONSTRUCTION WORKER USE DURING WORK HOURS. IN GENERAL, WORKERS MAY NOT USE CORRIDORS, STAIRS OR ELEVATORS DESIGNATED FOR STUDENTS OR SCHOOL STAFF. WHERE NO STAIRWELL AND OR ELEVATOR IS ASSIGNED, WORKERS MUST ENTER THE CONSTRUCTION SPACES DIRECTLY FROM THE BUILDING EXTERIOR.
   (2) LARGE AMOUNTS OF DEBRIS MUST BE REMOVED BY USING ENCLOSED CHUTES OR A SIMILAR SEALED SYSTEM. THERE SHALL BE NO MOVEMENT OF DEBRIS THROUGH HALLS OF OCCUPIED SPACES OF THE BUILDING. NO MATERIAL SHALL BE DROPPED OR THROWN OUTSIDE THE WALLS OF THE BUILDING.
   (3) ALL OCCUPIED PARTS OF THE BUILDING AFFECTED BY RENOVATION ACTIVITY SHALL BE CLEANED AT THE CLOSE OF EACH WORKDAY. SCHOOL BUILDINGS OCCUPIED DURING A CONSTRUCTION PROJECT SHALL MAINTAIN REQUIRED HEALTH, SAFETY AND EDUCATIONAL CAPABILITIES AT ALL TIMES THAT CLASSES ARE IN SESSION."
5. A PLAN DETAILING HOW EXITING REQUIRED BY THE APPLICABLE BUILDING CODE WILL BE MAINTAINED.
6. WORK UNDER THIS CONTRACT WILL BE CONDUCTED DURING THE SUMMER RECESS WHEN THE BUILDING IS UNOCCUPIED. IF THE BUILDING BECOMES OCCUPIED THE CONTRACTOR SHALL BE RESPONSIBLE TO MAINTAIN ALL EXISTING MEANS OF EGRESS IN A CLEAR AND FREE MANNER, INCLUDING THE STORAGE OF MATERIALS AND STAGING OF EQUIPMENT ON THE SITE. IF ANY PORTION OF THE BUILDING DOES BECOME OCCUPIED THE ARCHITECT WILL PROVIDE A DETAILED PLAN FOR EXITING, OVERHEAD PROTECTION AND EGRESS IN ACCORDANCE WITH APPLICABLE BUILDING CODES.
7. A PLAN DETAILING HOW ADEQUATE VENTILATION WILL BE MAINTAINED DURING CONSTRUCTION.
8. WORK UNDER THIS PROJECT WILL BE COMPLETED DURING THE SUMMER RECESS WHEN THE BUILDING WILL NOT BE OCCUPIED BY FACULTY, STAFF OR STUDENTS. IF A PORTION OF THE BUILDING IS TO BECOME OCCUPIED DURING THE CONSTRUCTION PROCESS THE CONTRACTOR SHALL CLOSE OFF ALL INTAKES, OPENINGS, AND MECHANICAL VENTILATION SYSTEMS ADJACENT TO THE WORK AREA. THE ARCHITECT SHALL ASSIST THE CONTRACTOR IN DEVELOPING A PLAN TO PROVIDE ALTERNATE MEANS OF FRESH AIR TO ALL OCCUPIED SPACES.

   "CONSTRUCTION AND MAINTENANCE OPERATIONS SHALL NOT PRODUCE NOISE IN EXCESS OF 60 DBA IN OCCUPIED SPACES OR SHALL BE SCHEDULED FOR TIMES WHEN THE BUILDING OR AFFECTED BUILDING SPACES ARE NOT OCCUPIED OR ACOUSTICAL ABATEMENT MEASURES SHALL BE TAKEN."

   "THE CONTRACTOR SHALL BE RESPONSIBLE FOR THE CONTROL OF CHEMICAL FUMES, GASES, AND OTHER CONTAMINATES PRODUCED BY WELDING, GASOLINE OR DIESEL ENGINES, ROOFING, PAVING, PAINTING, ETC. TO ENSURE THEY DO NOT ENTER OCCUPIED PORTIONS OF THE BUILDING OR AIR INTAKES." ALL VENTS SHALL BE SEALED TO PREVENT CONTAMINANTS FROM THE CONSTRUCTION AREA FROM ENTERING THE OCCUPIED AREAS OF THE BUILDING.
9. "THE CONTRACTOR SHALL BE RESPONSIBLE TO ENSURE THAT ACTIVITIES AND MATERIALS WHICH RESULT IN "OFF-GASSING" OF VOLATILE ORGANIC COMPOUNDS SUCH AS GLUES, PAINTS, FURNITURE, CARPETING, WALL COVERING, DRAPERY, ETC. ARE SCHEDULED, CURED OR VENTILATED IN ACCORDANCE WITH MANUFACTURERS RECOMMENDATIONS BEFORE A SPACE CAN BE OCCUPIED."
10. "LARGE AND SMALL ASBESTOS ABATEMENT PROJECTS AS DEFINED BY 12NYCRR56 SHALL NOT BE PERFORMED WHILE THE BUILDING IS OCCUPIED." IT IS OUR INTERPRETATION THAT THE TERM "BUILDING", AS REFERENCED IN THIS SECTION, MEANS A WING OR MAJOR SECTION OF A BUILDING THAT CAN BE COMPLETELY ISOLATED FROM THE REST OF THE BUILDING WITH SEALED NON COMBUSTIBLE CONSTRUCTION. THE ISOLATED PORTION OF THE BUILDING MUST CONTAIN EXITS THAT DO NOT PASS THROUGH THE OCCUPIED PORTION AND VENTILATION SYSTEMS MUST BE PHYSICALLY SEPARATED AND SEALED AT THE ISOLATION BARRIER.
11. EXTERIOR WORK SUCH AS ROOFING, FLASHING, SIDING, OR SOFFIT WORK MAY BE PERFORMED ON OCCUPIED BUILDINGS PROVIDED PROPER VARIANCES ARE IN PLACE AS REQUIRED, AND COMPLETE ISOLATION OF VENTILATION SYSTEMS AND AT WINDOWS IS PROVIDED. CARE MUST BE TAKEN TO SCHEDULE WORK SO THAT CLASSES ARE NOT DISRUPTED BY NOISE OR VISUAL DISTRACTION.
12. MINOR ASBESTOS PROJECTS DEFINED BY 12NYCRR56 AS AN ASBESTOS PROJECT INVOLVING THE REMOVAL, DISTURBANCE, REPAIR, ENCAPSULATION, ENCLOSURE OR HANDLING OF 10 SQUARE FEET OF ASBESTOS OR ASBESTOS MATERIAL MAY BE PERFORMED IN UNOCCUPIED AREAS OF AN OCCUPIED BUILDING IN ACCORDANCE WITH 12NYCRR56.
13. ALL PAINTED SURFACES TO BE DISTURBED DURING CONSTRUCTION AND/OR DEMOLITION UNDER THE SCOPE OF THIS PROJECT HAVE BEEN TESTED FOR LEAD CONTENT IN ACCORDANCE WITH USEPA REGULATIONS AND PER HUD GUIDELINES. ALL MATERIALS THAT TESTED POSITIVE WHICH ARE TO BE DISTURBED UNDER THE PROJECT ARE SCHEDULED FOR REMOVAL UNDER THE TERMS OF SECTION 026000 OF THE PROJECT SPECIFICATIONS. TRACES OF LEAD WERE ALSO DETECTED IN OTHER MATERIALS, THEREFORE THE CONTRACTOR SHALL TAKE THE PROPER MEASURES TO PROTECT AND TRAIN WORKERS PER OSHA REGULATIONS. ALL TESTING RESULTS ARE ATTACHED TO SPECIFICATION SECTION 028300.
14. UNDER NEW YORK STATE LAW SMOKING IS PROHIBITED ON SCHOOL GROUNDS. EMPLOYEES FOUND TO BE SMOKING ON SCHOOL GROUNDS SHALL BE ORDERED OFF SITE AND A SECOND OFFENSE WILL BE GROUNDS FOR PERMANENT REMOVAL FROM PROJECT. LEGAL PENALTIES MAY ALSO BE APPLIED.
15. ALL CONTRACTORS SHALL TAKE EVERY PRECAUTION AND SHALL PROVIDE SUCH EQUIPMENT AND FACILITIES AS ARE NECESSARY OR REQUIRED FOR THE SAFETY OF ITS EMPLOYEES. IN CASE OF AN ACCIDENT, FIRST AID SHALL BE ADMINISTERED TO ANY WHO MAY BE INJURED IN THE PROGRESS OF THE WORK. IN ADDITION, THE CONTRACTOR SHALL BE PREPARED FOR THE REMOVAL TO THE HOSPITAL FOR TREATMENT OF ANY EMPLOYEE EITHER SERIOUSLY INJURED OR ILL.
16. THE CONTRACTOR FOR GENERAL CONSTRUCTION SHALL PROVIDE TEMPORARY WEATHER-TIGHT AND INSULATED ENCLOSURES AS MAY BE REQUIRED BY THE SCOPE OF WORK FOR ALL EXTERIOR OPENINGS SO AS TO PROTECT ALL WORK FROM THE WEATHER, AND TO PROVIDE SECURITY AGAINST UNAUTHORIZED ENTRY. ENCLOSURES SHALL NOT CREATE DEAD END CONDITIONS, REQUIRED EXITS SHALL BE MAINTAINED FREE AND CLEAR.

H2M architects + engineers
1133 Westchester Ave., Suite N-210
White Plains, NY 10605
914.358.5623 • www.h2m.com
NY Architecture & Landscape Architecture: No Certificate Required
NY Engineering Certificate of Authorization No. 0018178

CONSULTANTS:

MARK	DATE	DESCRIPTION
0	09-11-24	SED SUBMISSION
1	02-25-25	SED ADDENDUM 1
	05-28-25	FINAL BID SET

REGISTERED ARCHITECT KEVIN MICHAEL MEDLER 028379 STATE OF NEW YORK

KEVIN M. MEDLER, R.A.
07/31/2027
EXP. DATE
NY REGISTERED ARCHITECT Lic. No. 028379
"IN ACCORDANCE WITH ARTICLE 145, SECTION 7209 OF THE NYS EDUCATION LAW, ALTERATION OF THIS DOCUMENT EXCEPT BY LICENSE PROFESSIONAL IS ILLEGAL"

DESIGNED BY:	DRAWN BY:	CHECKED BY:	REVIEWED BY:
CWP	NL	CWP	KMM

PROJECT No.:	DATE:	SCALE
WPSD2401	MAY 2025	AS SHOWN

CLIENT
White Plains City School District

Renovations at Rochambeau Alternate High School

228 Fisher Avenue
White Plains, NY 10606

SED #66-22-00-01-0-015-020

CONTRACT
ALL CONTRACTS

STATUS
FINAL BID DOCUMENT

SHEET TITLE
GENERAL NOTES, MAPS, DRAWING LIST, STAGING PLAN, EXIT PLAN AND LEGENDS

DRAWING No.
G 000.00

X:\WPSD (White Plains Central School District) - 1091\WPSD 2401 (Rochambeau Alt HS Renovations)\02 BIM-CAD\Dwgs-Docs\01 General\G 000.00 Cover Sheet.dwg Last Modified: May 28, 2025 - 10:33am Plotted on: May 28, 2025 - 10:34am By: ALongo

LEGEND

SYMBOL	DESCRIPTION
	PIPING UP
	PIPING DOWN
	PIPING RISE OR DROP
	BRANCH-TOP CONNECTION
	BRANCH-BOTTOM CONNECTION
	REDUCER
CO CO	CLEANOUT
	FLOOR CLEANOUT
	CAPPED PIPE
M	METER
	FLOOR DRAIN
	AQUASTAT
	PUMP
	STRAINER
	UNION
	THERMOSTATIC MIXING VALVE
	BALANCING VALVE (BLV)
	GLOBE VALVE (GLV)
	CHECK VALVE (CV)
	GAS COCK, GAS STOP
	BALL VALVE (BV)
	BUTTERFLY VALVE (BFV)
S	SOLENOID VALVE
	PRESSURE-REDUCING VALVE (PRV)
	GATE VALVE (GV)
	PRESSURE-RELIEF VALVE (RV)
	BACKFLOW PREVENTER
	FROST FREE HOSE BIBB
	HOSE BIBB
	RECESSED-BOX HOSE BIBB OR WALL HYDRANT
	EXPANSION JOINT
	WATER HAMMER ARRESTER
	VALVE IN RISER
CO	WALL CLEANOUT (WCO)
	PITCH DOWN OR UP IN DIRECTION OF ARROW
	COLD WATER (CW)
	TEMPERED WATER (TW)
	HOT WATER (HW)
	TEMPERED WATER RETURN (TWR)
	HOT WATER RETURN (HWR)
	WASTE PIPING (W,S,OW)
	BELOW SLAB WASTE PIPING
	VENT PIPING (V)
	GAS PIPING (G)
	TO BE REMOVED
	POINT OF CONNECTION
	POINT OF DISCONNECTION

ABBREVIATIONS

AFF	ABOVE FINISHED FLOOR
BTU	BRITISH THERMAL UNIT
BTUH	BTU PER HOUR
CLG	CEILING
CO	CLEAN OUT
CODP	CLEAN OUT DECK PLATE
COWP	CLEAN OUT WALL PLATE
CW	COLD WATER
(D)	DEMOLISH
DCV	DOUBLE CHECK VALVE DEVICE
DEG. F	° FAHRENHEIT
DIA	DIAMETER
DN	DOWN
(E)	EXISTING
EA	EACH
FAI	FRESH AIR INTAKE
FD	FLOOR DRAIN
G	GAS
'GC'	GENERAL CONSTRUCTION CONTRACTOR
GPM	GALLONS PER MINUTE
GPH	GALLONS PER HOUR
'H'	HVAC CONTRACTOR
HP	HORSEPOWER
HW	HOT WATER
HWR	HOT WATER RETURN
IN.	INCHES
IN. W.C. (W.G.)	INCHES WATER COLUMN (WATER GAUGE)
KW	KILOWATTS
LBS	POUNDS
M	METER
MAX	MAXIMUM
MIN	MINIMUM
NTS	NOT TO SCALE
OD	OUTER DIAMETER
(P)	PROPOSED
'P'	PLUMBING CONTRACTOR
PD	PRESSURE DROP
RD	ROOF DRAIN
RPM	REVOLUTIONS PER MINUTE
RPZ	REDUCED PRESSURE ZONE
SAN / S	SANITARY
ST	STORM DRAIN
TEMP	TEMPERATURE
TYP	TYPICAL
TW	TEMPERED WATER (110°F)
TWR	TEMPERED WATER RETURN
V	VENT
VTR	VENT THROUGH ROOF
W	WASTE

DEMOLITION NOTES

GENERAL

1. PRIOR TO PROPOSAL SUBMISSION, THE CONTRACTOR SHALL VISIT THE SITE TO REVIEW THE EXISTING CONDITIONS ASSOCIATED WITH THE SCOPE OF WORK TO ASCERTAIN THE DIFFICULTIES WHICH WILL AFFECT THE EXECUTION OF THE WORK INCLUDING PIPING ACCESS.
2. SUBMISSION OF A PROPOSAL WILL BE CONSTRUED AS EVIDENCE THAT THE ABOVE SITE EXAMINATION HAS BEEN MADE AND LATER CLAIMS WILL NOT BE RECOGNIZED FOR EXTRA LABOR, EQUIPMENT OR MATERIALS REQUIRED BECAUSE OF DIFFICULTIES ENCOUNTERED WHICH COULD HAVE BEEN FORESEEN HAD SUCH AN EXAMINATION BEEN MADE.
3. ALL DEMOLITION WORK SHALL BE IN COMPLIANCE WITH ALL FEDERAL AND NEW YORK STATE APPLICABLE BUILDING AND LIFE AND SAFETY REGULATIONS.
4. DEMOLITION WORK SHALL INCLUDE ALL MATERIALS, LABOR, EXTENSIONS, CONNECTIONS, CUTTING, REPAIRING, ADAPTING AND OTHER PLUMBING WORK REQUIRED TO MAINTAIN SERVICE IF REQUIRED. COORDINATE THE EXTENT OF DEMOLITION WORK WITH THE ARCHITECT AND BUILDING OWNER.
5. THE CONTRACTOR SHALL REMOVE AND DISPOSE OF ALL CONSTRUCTION DEBRIS AND UNWANTED MATERIAL OFF SITE IN ACCORDANCE WITH CONTRACT SPECIFICATIONS. COORDINATE WITH OWNER FOR ANY EQUIPMENT OR FIXTURES TO BE KEPT ON SITE.
6. THE CONTRACTOR SHALL TAKE CARE NOT TO DAMAGE ADJOINING SURFACES OUTSIDE THE CONTRACT AREA. THE CONTRACTOR SHALL BE RESPONSIBLE TO RESTORE ALL EXISTING CONDITION SURFACES DAMAGED DURING CONSTRUCTION INCLUDING PATCHING AND PAINTING AS REQUIRED AND DEEMED NECESSARY BY THE ARCHITECT.
7. ALL EXISTING WORK REQUIRED TO REMAIN BUT INTERFERING WITH PROPOSED NEW PLUMBING (AS WELL AS ELECTRICAL, MECHANICAL AND GENERAL CONSTRUCTION WORK) SHALL BE RELOCATED AND RECONNECTED USING MATERIALS CONFORMING TO STANDARDS OF THIS CONTRACT.

PIPING SCOPE OF WORK

1. REMOVE ALL ABANDONED BASE BUILDING PIPING BACK AND CAPPED AT THE EXISTING WET COLUMNS OR SHAFTS, OR AS NOTED ON DRAWINGS.
2. IF THE BUILDING IS TO REMAIN OPERATIONAL, CONTRACTOR SHALL COORDINATE WITH THE BUILDING OWNER ON TIMING OF WORK AND TO PROVIDE A MINIMUM OF 48-HOURS IN ADVANCE.
3. PROVIDE ADDITIONAL SUPPORT FOR ALL EXISTING PIPING TO REMAIN WHICH ARE AFFECTED BY DEMOLITION OF EXISTING CEILING AND PARTITIONS.

PLUMBING FIXTURE SCOPE OF WORK

1. ALL FIXTURES INDICATED ON THE PLANS DESIGNATED FOR REMOVAL OR REPLACEMENT SHALL BE COMPLETELY REMOVED AND DISPOSED OF. SCOPE TO INCLUDE ALL PLUMBING FIXTURES INCLUDING, SINKS, FAUCETS, FLOOR DRAINS, STOP VALVES AND ALL DEVICES USED TO SECURE THESE FIXTURES IN PLACE.
2. PRIOR TO THE REMOVAL OF FIXTURES, THE CONTRACTOR SHALL MAKE ALL NECESSARY DISCONNECTS AND CAPPINGS AND WORK REQUIRED TO ACCESS THE PIPING WITHIN CHASES AND WALLS. THE CONTRACTORS SHALL SHUT WATER OFF TO THE FIXTURES AND REPLACE ANY DAMAGED VALVES WITHIN THE SCOPE OF WORK AREA.
3. FLUSH AND SNAKE ALL SANITARY/WASTE LINES BACK TO THEIR ASSOCIATED RISERS PRIOR TO THE START OF THE WORK.

GENERAL PLUMBING NOTES

1. PROVIDE ALL MATERIALS AND EQUIPMENT AND PERFORM ALL LABOR REQUIRED TO INSTALL COMPLETE AND OPERABLE PLUMBING SYSTEMS AS INDICATED ON THE DRAWINGS, AS SPECIFIED AND AS REQUIRED BY CODE.
2. THE CONTRACTOR, BY PRESENTING THEIR BID FOR THE WORK, REPRESENTS THAT HE/SHE HAS INSPECTED THE SITE AND IS COMPLETELY FAMILIAR WITH THE SCOPE OF WORK AND ALL FIELD CONDITIONS RELATED TO, AND AFFECTING THE WORK AND ITS PERFORMANCE. EXCEPTIONS AFFECTING THE WORK AND ITS PERFORMANCE, OR CONFLICTS BETWEEN FIELD CONDITIONS, SHALL BE BROUGHT TO THE ATTENTION OF THE ARCHITECT/ENGINEER PRIOR TO THE SUBMISSION OF BIDS.
3. PERFORM ALL WORK IN ACCORDANCE WITH THE 2020 PLUMBING CODE OF NEW YORK STATE (PCNYS), MECHANICAL (MCNYS), ENERGY CONSERVATION CONSTRUCTION CODE OF NEW YORK STATE (ECCCNYS) CODE AND THE REQUIREMENTS OF THE LOCAL AUTHORITIES HAVING JURISDICTION.
4. APPLY FOR AND SECURE ALL REQUIRED PERMITS AND INSPECTIONS AND PAY ALL COSTS FOR THE SAME.
5. DO NOT SCALE DRAWINGS. DRAWINGS FOR PLUMBING WORK ARE DIAGRAMMATIC AND ARE INTENDED TO CONVEY SCOPE AND GENERAL ARRANGEMENT ONLY. THE LOCATIONS OF ALL ITEMS SHOWN ON THE DRAWINGS OR CALLED FOR IN THE SPECIFICATIONS THAT ARE NOT DEFINITELY FIXED BY DIMENSIONS ARE APPROXIMATE.
6. COORDINATE CONTRACT DOCUMENTS PROJECT REQUIREMENTS, WORK OF OTHERS, AND EQUIPMENT AND MATERIALS PURCHASED WITH FIELD DIMENSIONS, MANUFACTURERS REQUIREMENTS FOR INSTALLATION, OPERATION, AND MAINTENANCE, CONTRACTORS INTENDED MEANS AND METHODS OF INSTALLATION AND CONTRACTORS FABRICATED ITEMS TO ENSURE A PROPER "FIT" AND INSTALLATION. BRING ANY CONFLICTS TO THE ATTENTION OF THE ARCHITECT/ENGINEER DURING THE SUBMITTAL PHASE FOR RESOLUTION PRIOR TO PURCHASING ANY EQUIPMENT.
7. FIELD VERIFY AND COORDINATE ALL PIPING DIMENSIONS BEFORE FABRICATION. MAKE MODIFICATIONS IN THE LAYOUT AS NEEDED TO PREVENT CONFLICT WITH WORK OF OTHER TRADES OR FOR PROPER EXECUTION OF THE WORK. OBTAIN THE APPROVAL OF THE ARCHITECT/ENGINEER FOR MODIFICATIONS.
8. PROVIDE PRODUCTS OF ONE MANUFACTURER WHERE TWO OR MORE ITEMS OF THE SAME TYPE OF MATERIAL OR EQUIPMENT IS REQUIRED.
9. INSTALL ALL EQUIPMENT AND APPURTENANCES IN ACCORDANCE WITH MANUFACTURER'S RECOMMENDATIONS, CONTRACT DOCUMENTS, AND APPLICABLE CODES AND REGULATIONS. REFER TO DETAILS FOR ADDITIONAL PIPING AND EQUIPMENT INSTALLATION REQUIREMENTS.
10. LOCATE ALL TEMPERATURE, PRESSURE, AND FLOW MEASURING DEVICES IN ACCESSIBLE LOCATIONS WITH STRAIGHT SECTION OF PIPE UP- AND DOWNSTREAM AS RECOMMENDED BY THE MANUFACTURER TO ENSURE MANUFACTURER CERTIFIED ACCURACY.
11. COORDINATE ALL EQUIPMENT CONNECTIONS WITH MANUFACTURER'S CERTIFIED DRAWINGS. COORDINATE AND PROVIDE ALL PIPING TRANSITIONS REQUIRED FOR FINAL CONNECTIONS TO EQUIPMENT.
12. COORDINATE LOCATIONS AND SIZES OF ALL FLOOR, WALL, AND ROOF OPENINGS WITH ALL OTHER TRADES. COORDINATE ALL PIPING AND EQUIPMENT SUPPORTED FROM STRUCTURE WITH GENERAL CONSTRUCTION WORK.
13. COMPLETE ALL PRESSURE TESTS BEFORE ANY PLUMBING EQUIPMENT, OR PIPING INSULATION IS APPLIED.
14. MAKE ALL ATTACHMENTS TO JOISTS, TRUSSES, OR JOIST GIRDERS AT PANEL POINTS. PROVIDE BEAM CLAMPS MEETING MSS STANDARDS. THE USE OF C-CLAMPS IS NOT PERMITTED.
15. PROVIDE CONCRETE PADS A MINIMUM OF 4 INCHES HIGH FOR ALL FLOOR MOUNTED EQUIPMENT. EXTEND PAD 4 INCHES BEYOND THE EQUIPMENT ON ALL SIDES.
16. INSTALL PIPING, AND CONDUIT CONCEALED IN AREAS HAVING HUNG CEILINGS AND/OR FURRED SPACES UNLESS OTHERWISE INDICATED ON THE DRAWINGS.
17. REFER TO ARCHITECTURAL DRAWINGS FOR EXACT LOCATION OF ALL ACCESSIBLE FIXTURES. MOUNT ALL SUCH FIXTURES IN ACCORDANCE WITH THE REQUIREMENTS OF THE AUTHORITY HAVING JURISDICTION.
18. PROVIDE ACCESS DOORS IN WALLS, PARTITIONS, AND CEILINGS AS REQUIRED TO MAKE VALVES, WATER HAMMER ARRESTERS, ETC. READILY ACCESSIBLE.
19. ARRANGE FOR, COORDINATE, AND MAKE CONNECTION TO ALL SERVICES PROVIDED BY OTHERS. CONFORM TO ALL REQUIREMENTS APPLICABLE TO CONNECTIONS IMPOSED BY UTILITY COMPANIES AND AUTHORITIES HAVING JURISDICTION.
20. INSTALL FIXTURES AND EQUIPMENT WITH VALVES, UNIONS, ETC. TO ALLOW FOR EASE OF SERVICE AND/OR REMOVAL.
21. PROVIDE A CLEANOUT AT THE BASE OF WASTE AND VENT STACKS WITH A FINISHED WALL PLATE IN FINISHED WALLS.
22. FURNISH AND INSTALL WATER PRESSURE REDUCING VALVE AND PRESSURE RELIEF VALVE IN ACCORDANCE WITH THE PLUMBING CODE OF NEW YORK STATE ON ALL INCOMING DOMESTIC WATER SYSTEMS IN EXCESS OF 80 P.S.I.G.
23. SLOPE ALL VENT PIPING TO DRAIN BACK TO THE DRAINAGE SYSTEM.
24. FLUSH AND DISINFECT ALL DOMESTIC POTABLE WATER PIPING AND TEST THE WATER IN ACCORDANCE WITH THE PLUMBING CODE OF NEW YORK STATE. PROVIDE CERTIFICATE OF PERFORMANCE AND LABORATORY TEST REPORT TO LOCAL AUTHORITIES HAVING JURISDICTION AND OBTAIN THEIR APPROVAL.
25. PROVIDE WATER HAMMER ARRESTORS AT ALL QUICK CLOSING FIXTURE VALVE LOCATIONS.
26. ALL PIPING, VALVES AND FITTINGS USED FOR POTABLE WATER SHALL BE NSF 61/372 COMPLIANT AND BE TESTED FOR LOW LEAD.
27. ANY PENETRATIONS THROUGH AIR BARRIER SHALL BE SEALED AS PER 2020 BCNYS AND COMMERCIAL PROVISIONS .
28. ALL PIPING IN PLENUM SPACES SHALL BE CAST IRON FOR SANITARY, STORM, VENT SYSTEMS, AND COPPER PIPING FOR DOMESTIC SYSTEMS, AND STEEL PIPING FOR GAS SYSTEMS. NO PLASTIC PIPING ALLOWED.
29. HOT WATER TEMPERATURE FOR ALL PUBLIC HAND WASHING FIXTURES SHALL BE TEMPERED TO A MAXIMUM TEMPERATURE OF 110 DEGREES F.
30. ALL FIXTURES SHALL MEET THE WATER CONSERVATION REQUIREMENTS LISTED IN THE TABLE 604.4 OF THE 2020 PLUMBING CODE OF NEW YORK STATE.
31. ALL FIXTURES THAT HAS THE ABILITY TO HAVE A HOSE CONNECTED TO IT, OR DIRECT CONNECTED FIXTURES, SHALL HAVE A BACKFLOW PREVENTION DEVICE ON THE FAUCET, VACUUM BREAKER (ASSE 1052 AND ASME A112.21.3).
32. ALL SANITARY FITTINGS SHALL BE 'WYE' TYPE AND SHALL FOLLOW THE DIRECTION OF FLOW.
33. IN THE EVENT THAT THERE IS A DISCREPANCY BETWEEN DESIGN PLANS, RISER DIAGRAMS, AND/OR SPECIFICATIONS CONCERNING PIPE SIZES, FIXTURES, AND/OR EQUIPMENT, THE MOST STRINGENT REQUIREMENTS SHALL BE APPLIED TO THE PROJECT.
34. FIRE STOP ALL OPENINGS IN FIRE RATED CONSTRUCTION FOR PIPING, CONDUIT, ETC.
35. MAINTAIN MAXIMUM HEADROOM AND SPACE CONDITIONS AT ALL POINTS. WHERE HEADROOM AND SPACE CONDITIONS APPEAR INADEQUATE, NOTIFY ARCHITECT PRIOR TO PROCEEDING WITH INSTALLATION. MAINTAIN A MINIMUM OF 6'-8" CLEARANCE FROM FINISHED FLOOR TO UNDERSIDE OF PIPES, CONDUITS, SUSPENDED EQUIPMENT, ETC., THROUGHOUT ACCESS ROUTES IN MECHANICAL ROOMS.
36. CORE DRILL ALL PENETRATIONS THROUGH CONCRETE FLOORS, WALLS, AND FOOTINGS.
37. INSTALL LINK SEAL TYPE PROTECTION FOR WATER RESISTANT SEALS AT ALL SLAB AND BELOW GROUND WALL FOOTING PENETRATIONS.
38. COVER ALL COPPER PIPING BELOW SLAB WITH "ARMAFLEX" TYPE INSULATION.

ENERGY NOTES

2020 ENERGY CONSERVATION CONSTRUCTION CODE OF NEW YORK STATE NOTES: STATEMENT OF COMPLIANCE:

TO THE BEST OF MY KNOWLEDGE, AND PERSONAL JUDGEMENT, THESE PLANS AND SPECIFICATIONS ARE IN COMPLIANCE WITH THE 2020 NEW YORK STATE ENERGY CONSERVATION CODE (ECCCNYS).

1. SERVICE WATER HEATING EQUIPMENT PERFORMANCE EFFICIENCY:
   - 1.1. WATER HEATING EQUIPMENT AND HOT WATER STORAGE TANKS SHALL MEET THE REQUIREMENTS OF TABLE C404.2 IN THE 2020 ECCCNYS. (ECCCNYS C404.2)
   - 1.2. SERVICE WATER HEATING SHALL BE COMMISSIONED AND COMPLETED IN ACCORDANCE WITH SECTION C408.2 OF THE 2020 ECCCNYS.
2. TEMPERATURE CONTROL:
   - 2.1. SERVICE WATER HEATING EQUIPMENT SHALL BE PROVIDED WITH CONTROLS ALLOWING A SETPOINT OF 110°F AND 90 °F FOR OTHER OCCUPANCIES. PUBLIC REST ROOM LAVATORIES SHALL HAVE A MAXIMUM OUTLET TEMPERATURE OF 110°F.
   - 2.2. WHERE WATER HEATING EQUIPMENT SERVING NONCIRCULATING SYSTEMS IS NOT SUPPLIED WITH INTEGRAL HEAT TRAPS, HEAT TRAPS SHALL BE PROVIDED ON THE SUPPLY AND DISCHARGE PIPING. (ECCCNYS C404.3)
3. PIPE INSULATION:
   - 3.1. AUTOMATIC CIRCULATING HOT WATER SYSTEM PIPING SHALL BE INSULATED WITH 1 INCH OF INSULATION WITH A CONDUCTIVITY NOT EXCEEDING 0.27 BTU PER INCH, OR THE INSULATION REQUIREMENTS, WHICHEVER IS GREATER. THE FIRST 8 FT OF PIPING IN NONCIRCULATING SYSTEMS WITH EQUIPMENT WITHOUT INTEGRAL HEAT TRAPS SHALL BE INSULATED WITH 0.5 INCH OF MATERIAL HAVING A CONDUCTIVITY NOT EXCEEDING 0.27 BTU PER INCH, OR THE INSULATION REQUIREMENTS, WHICHEVER IS GREATER. (ECCCNYS C404.5)
   - 3.2. ALL PIPING TO BE INSULATED WITH 0.21-0.28 CONDUCTIVITY
   - 3.3. COLD WATER PIPING - ALL SIZES - 1-INCH INSULATION, A.S. JACKET.
   - 3.4. STORM DRAINAGE PIPING ALL HORIZONTAL RUNS AND DRAIN BODY - MINIMUM 1-INCH INSULATION, A.S. JACKET.
   - 3.5. HOT WATER PIPING (140°F) AND TEMPERED WATER PIPING (110°F)
     - 3.5.1. PIPE SIZE: < 1" INSULATION: 1"
     - 3.5.2. PIPE SIZE: 1" TO < 1-1/2" INSULATION: 1"
     - 3.5.3. PIPE SIZE: 1-1/2 TO < 4" INSULATION: 1.5"
     - 3.5.4. PIPE SIZE: 4" TO < 8" INSULATION: 1.5"
4. HOT WATER SYSTEM CONTROLS:
   - 4.1. CIRCULATING HOT WATER SYSTEM PUMPS OR HEAT TRACE SHALL BE ARRANGED TO BE TURNED OFF EITHER AUTOMATICALLY OR MANUALLY WHEN THERE IS LIMITED HOT WATER DEMAND. READY ACCESS SHALL BE PROVIDED TO THE OPERATING CONTROLS. (ECCCNYS C404.6)
5. PIPE VOLUME AND MAXIMUM LENGTHS
   - 5.1. PER SECTION OF C404.5.1 OF THE 2020 ECCCNYS, ALL MAXIMUM PIPE LENGTHS FROM FIXTURES SHALL COMPLY WITH THE MAXIMUM PIPE LENGTHS ON THE CHART BELOW. CONTRACTOR TO ENSURE HOT WATER RETURN PIPING IS INSTALLED AS PER PLANS AND THAT THESE LENGTHS ARE MAINTAINED.

NOMINAL PIPE SIZE (INCHES)	VOLUME (LIQUID OUNCES PER FOOT LENGTH)	MAXIMUM PIPING LENGTH (FEET)	
		PUBLIC LAVATORY FAUCETS	OTHER FIXTURES AND APPLIANCES
1/4"	0.33	6	50
5/16"	0.5	4	50
3/8"	0.75	3	50
1/2"	1.5	2	43
5/8"	2	1	32
3/4"	3	0.5	21
7/8"	4	0.5	16
1"	5	0.5	13
1-1/4"	8	0.5	8
1-1/2"	11	0.5	6
2" OR LARGER	18	0.5	4

LEAD FREE NOTE:

1. ALL FAUCETS, FITTINGS, AND VALVES MUST COMPLY WITH NSF 61 AND ASTM 372 FOR LOW LEAD PERCENTAGE.
2. CONTRACTOR SHALL BE RESPONSIBLE TO DEMONSTRATE COMPLIANCE WITH THE NYS DEPARTMENT OF HEALTH LEAD IN WATER REGULATION (10 NYCRR 67-4).
3. AT THE CONCLUSION OF NEW PLUMBING WORK, THE CONTRACTOR SHALL BE RESPONSIBLE TO PROVIDE THE SERVICES OF A THIRD PARTY NYS LICENSED ENVIRONMENTAL TESTING LABORATORY TO PROVIDE LEAD TESTING AT ALL NEW LAVATORIES, SINKS, SHOWERS, DRINKING FOUNTAINS AND ALL OTHER FIXTURES WHERE WATER MAY BE CONSUMED FOR DRINKING. TWO COPIES OF THE REPORT MUST BE SUBMITTED, ONE COPY TO THE ENGINEER AND THE OTHER ONE TO THE OWNER.

HANGER SPACING

PIPING MATERIAL	MAX. HORIZONTAL (FT)	MAX. VERTICAL (FT)
POLYETHYLENE	2.67	4
PEX	2.67	10
CPVC 1" OR SMALLER	3	10
ABS/PVC/CPVC (>1")	4	10
CAST-IRON	5	15
COPPER (<1-1/2)	6	10
COPPER (≥ 1-1/2")/BRASS)	10	10
STEEL	12	15

HANGER ROD SCHEDULE

PIPE SIZE	ROD SIZE (DIA.)	PIPE SIZE	ROD SIZE (DIA.)
≤ 2"	3/8"	4" THRU 5"	5/8"
2 1/2" THRU 3 1/2"	1/2"	6" THRU 8"	3/4"

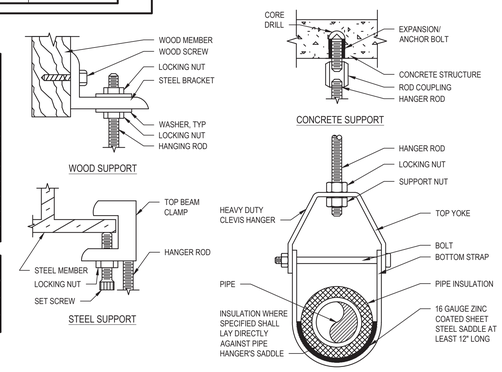

1 **Pipe Hanger Detail**
SCALE: NTS

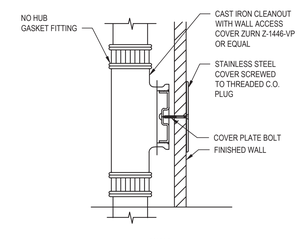

2 **Cleanout Details**
SCALE: NTS

INTERCEPTORS

EQUIPMENT NO.	LOCATION	BASIS OF DESIGN INFORMATION							REMARKS
		FLUID	FLOW (GPM)	CAPACITY (LBS)	INLET AND OUTLET SIZE	MANUFACTURER	MODEL	NOMINAL DIMENSIONS	
CT-1	ART ROOMS	CLAY	35 GPM	-	2"	STRIEM	AA-2	24.5" DIA. X 23" H	UNIT TO BE FLOOR MOUNTED
AI-1	SCIENCE ROOM	ACID		5	1-1/2"	ZURN	Z9A-PHIX	7" DIA. X 15" H	UNIT TO BE MOUNTED IN CASEWORK UNDER SINK

PLUMBING FIXTURE SCHEDULE

FIXTURE TAG	DESCRIPTION	BASIS OF DESIGN						MINIMUM CONNECTION SIZES							SPECIFICATION	REMARKS
		MAKE	MODEL	TRIM / FAUCET				COLD WATER		HOT WATER		DRAIN		VENT		
				MAKE	MODEL	OPERATION	MAX.FLOW	SIZE	WFU	SIZE	WFU	SIZE	DFU			
LAV-1	LAVATORY - WALL MOUNT - SENSOR FAUCET	SLOAN	AD-81000 RUSH STREET	SLOAN	EBF-415	SENSOR BATTERY	0.5 GPM	1/2"	0.5	1/2"	0.5	1-1/2"	1	1-1/2"	SINK: SLOANSTONE RUSH STREET, WALL MOUNTED SQUARE FRONT SINK, 30" W X 34" H, ADA COMPLIANT FAUCET: DECK MOUNTED, ADA COMPLIANT, INTEGRATED SIDE MIXER, VANDAL RESISTANT, CHROME, WITH 0.5 GPM AERATOR. COMPLIES WITH ASME A117.1 AND NSF 372. INCLUDE PK00.PAC PLUG-IN AC POWER KIT.	PROVIDE BRASS ANGLE STOP VALVES WITH FLEXIBLE STAINLESS STEEL SUPPLIES, AND 1-1/2" BRASS P-TRAP. PROVIDE CARRIER SUPPORT WATTS WCA-411 OR APPROVED EQUAL. HOT WATER SHALL NOT EXCEED 105°F. INSULATE ALL EXPOSED DRAIN AND SUPPLY PIPING WITH TRUBRO LAVGUARD. PROVIDE EHD-420-CP-HEPA HAND DRYER AND ESD-410-BN SOAP DISPENSER.
LAV-2	LAVATORY - WALL MOUNT - SENSOR FAUCET	-	-	-	-	-	0.5 GPM	1/2"	0.5	1/2"	0.5	1-1/2"	1	1-1/2"	SINK: PROVIDED BY OWNER FAUCET: PROVIDED BY OWNER	
WC-1	WATER CLOSET - WALL MOUNTED - TOP SPUD	SLOAN	WETS-2450.1201	SLOAN	SOLIS 8111	SENSOR BATTERY	1.28 GPF	1"	10	- - -	- - -	3"	4	1-1/2"	TOILET: VITREOUS CHINA, ELONGATED, ADA HEIGHT, ASME A112.19.2. PROVIDE TOILET SEAT CHURCH 295CT OR APPROVED EQUAL. MINIMUM OF 25 PSI. FLUSH VALVE: CONCEALED SENSOR FLUSHOMETER VALVE, 1.28 GPF, ROUGH BRASS FINISH, FIXTURE CONNECTION REAR SPUD, SOLAR BATTERY CHARGER, TRUE MECHANICAL OVERRIDE, SMALL WALL BOX.	PROVIDE CARRIER SUPPORT WATTS ISCA SERIES OR APPROVED EQUAL. SEE PLANS FOR PIPE ROUTING AND FOR SPECIFIC CARRIER ORIENTATION. COORDINATE GRAB BAR HEIGHT WITH FLUSHVALVE.
WC-2	WATER CLOSET - FLOOR MOUNTED - FLOOR OUTLET - ADA COMPLIANT - TOP SPUD	SLOAN	ST-2029	SLOAN	SOLIS 8111	SENSOR BATTERY	1.28 GPF	1"	10	- - -	- - -	3"	4	1-1/2"	TOILET: VITREOUS CHINA, ELONGATED, ADA HEIGHT, ASME A112.19.2. PROVIDE TOILET SEAT CHURCH 295CT OR APPROVED EQUAL. MINIMUM OF 25 PSI. FLUSH VALVE: CONCEALED SENSOR FLUSHOMETER VALVE, 1.28 GPF, ROUGH BRASS FINISH, FIXTURE CONNECTION REAR SPUD, SOLAR BATTERY CHARGER, TRUE MECHANICAL OVERRIDE, SMALL WALL BOX.	COORDINATE GRAB BAR HEIGHT WITH FLUSH VALVE.
SK-1	ART ROOM TROUGH SINK - ADA	ELKAY	LK50-13037A	ADVANCE TABCO	ELKAY	LK940TS0874S	1.5 GPM	3/4"	1	3/4"	1	1/2"	2	1-1/2"	SINK: 3-DRAIN THROUGH SINK ON LEGS WITH BASIN DIMENSIONS 104"W X 26.5"L X 14"D. 14 GAUGE 304 STAINLESS STEEL GRID STRAINERS. SINK TO COMPLY WITH ASME A112.19.3. FAUCET: FOUR 8" O.C. BACK MOUNTED FAUCETS WITH 8" SWING SPOUTS AND 4" WRIST BLADE HANDLES	PROVIDE BRASS ANGLE STOP VALVES WITH FLEXIBLE STAINLESS STEEL SUPPLIES. PROVIDE SOLIDS INTERCEPTOR CT-1 BELOW SINK. SEE INTERCEPTORS SCHEDULE FOR MORE INFORMATION.
SK-2	SCIENCE ROOM - ADA	-	-	-	-	-	-	1/2"	0.5	1/2"	0.5	1-1/2"	1	1-1/2"	SINK: PROVIDED BY OWNER FAUCET: PROVIDED BY OWNER	
SK-3	SCIENCE ROOM SINK - INSTRUCTOR	-	-	-	-	-	-	1/2"	0.5	1/2"	0.5	1-1/2"	1	1-1/2"	SINK: PROVIDED BY OWNER FAUCET: PROVIDED BY OWNER	
FD-1	FLOOR DRAIN	ZURN	ZN-415-BE	-	-	-	-	-	-	-	-	-	2	2	FLOOR DRAIN: DURA-COATED CAST IRON BODY. POLISHED BRONZE TOP WITH FUNNEL DRAIN	PROVIDE TRAP SEALS: ZURN Z1072. SEE PLANS FOR SIZES.

H2M architects + engineers
1133 Westchester Ave., Suite N-210
White Plains, NY 10605
914.358.5623 • www.h2m.com
NY Architecture & Landscape Architecture: No Certificate Required
NY Engineering Certificate of Authorization No. 0018178

CONSULTANTS:

MARK	DATE	DESCRIPTION
0	09-11-24	SED SUBMISSION
1	02-25-25	SED ADDENDUM 1
	05-28-25	FINAL BID SET

STATE OF NEW YORK · JONATHAN RICHARD MURATORE · 096440-1 · LICENSED PROFESSIONAL ENGINEER

JONATHAN R. MURATORE, P.E.
10/31/2027 EXP. DATE
NY PROFESSIONAL ENGINEER Lic. No. 096440
"IN ACCORDANCE WITH ARTICLE 145, SECTION 7209 OF THE NYS EDUCATION LAW, ALTERATION OF THIS DOCUMENT EXCEPT BY LICENSE PROFESSIONAL IS ILLEGAL"

DESIGNED BY:	DRAWN BY:	CHECKED BY:	REVIEWED BY:
CJM	CJM	JRM	JRM
PROJECT No.: WPSD2401	DATE: MAY 2025	SCALE: AS SHOWN	

CLIENT
White Plains City School District

Renovations at Rochambeau Alternate High School

228 Fisher Avenue White Plains, NY 10606

SED #66-22-00-01-0-015-020

CONTRACT
CONTRACT P PLUMBING CONTRACT

STATUS
FINAL BID DOCUMENT

SHEET TITLE
PLUMBING GENERAL NOTES, LEGEND, ABBREVIATIONS, SCHEDULES, AND DETAILS

DRAWING No.
P 001.00

X:\WPSD\White Plains Central School District_1999\WPSD 2401 - Rochambeau Alt HS Renovations\02 BIM CAD\Cad-Dwgs\12 Plumbing\P 001.dwg, Plumbing General Notes and Schedules.dwg Last Modified: May 27, 2025 - 3:19pm Plotted on: May 27, 2025 - 3:19pm By: CMcDermott

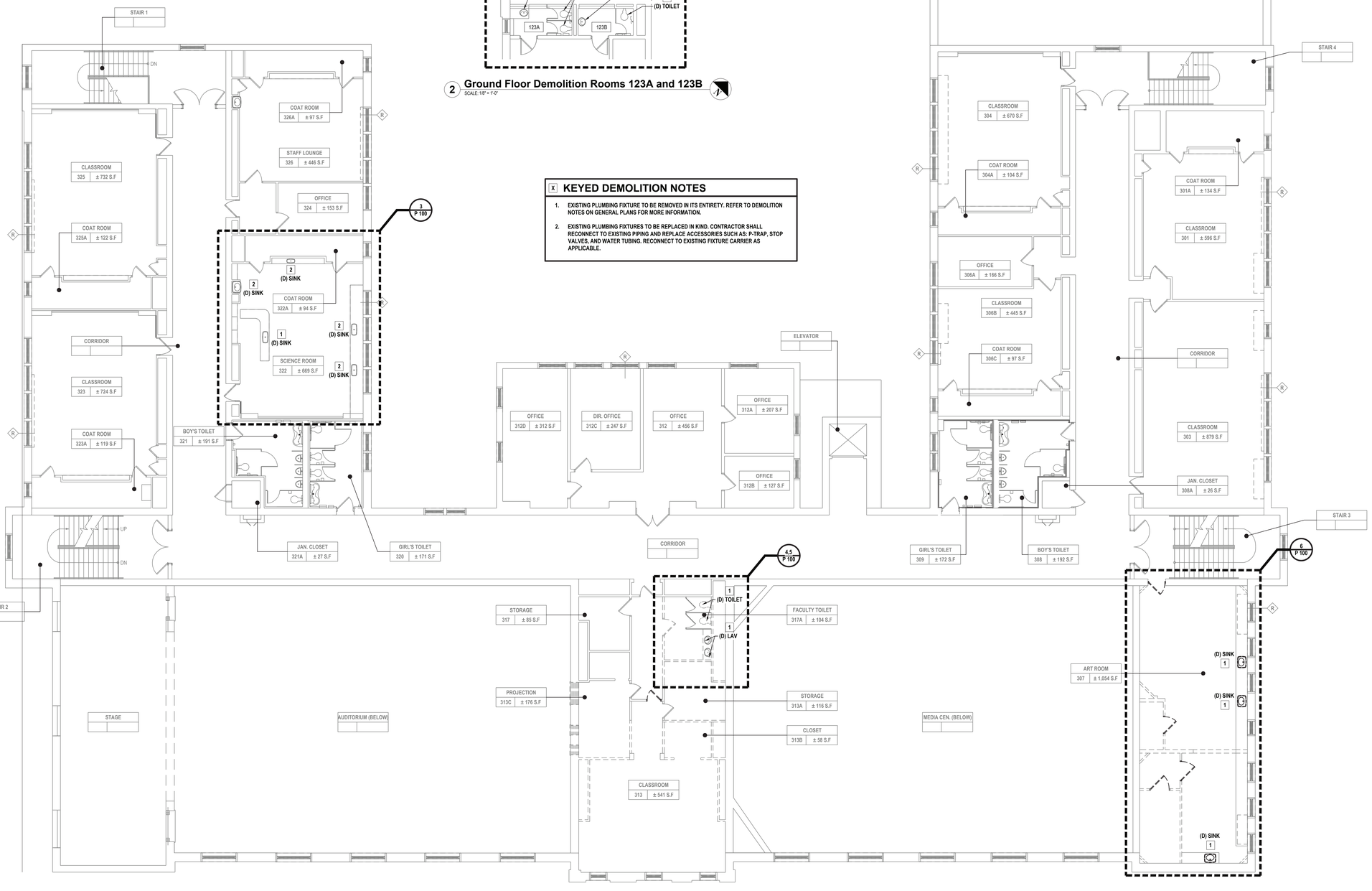

1 **Plumbing Second Floor Overall Demolition Plan**
SCALE: 1/8" = 1'-0"

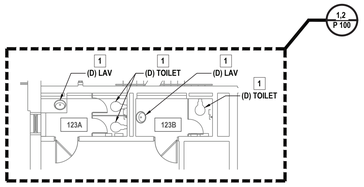

2 **Ground Floor Demolition Rooms 123A and 123B**
SCALE: 1/8" = 1'-0"

X KEYED DEMOLITION NOTES

1. EXISTING PLUMBING FIXTURE TO BE REMOVED IN ITS ENTIRETY. REFER TO DEMOLITION NOTES ON GENERAL PLANS FOR MORE INFORMATION.
2. EXISTING PLUMBING FIXTURES TO BE REPLACED IN KIND. CONTRACTOR SHALL RECONNECT TO EXISTING PIPING AND REPLACE ACCESSORIES SUCH AS: P-TRAP, STOP VALVES, AND WATER TUBING. RECONNECT TO EXISTING FIXTURE CARRIER AS APPLICABLE.

H 2 M architects + engineers

1133 Westchester Ave., Suite N-210
White Plains, NY 10605
914.358.5623 • www.h2m.com
NY Architecture & Landscape Architecture: No Certificate Required
NY Engineering Certificate of Authorization No. 0018178

CONSULTANTS:

MARK	DATE	DESCRIPTION
0	09-11-24	SED SUBMISSION
1	02-25-25	SED ADDENDUM 1
	05-28-25	FINAL BID SET

STATE OF NEW YORK · JONATHAN RICHARD MURATORE · 096440-1 · LICENSED PROFESSIONAL ENGINEER

10/31/2027 EXP. DATE

JONATHAN R. MURATORE, P.E.
NY PROFESSIONAL ENGINEER Lic. No. 096440

"IN ACCORDANCE WITH ARTICLE 145, SECTION 7209 OF THE NYS EDUCATION LAW, ALTERATION OF THIS DOCUMENT EXCEPT BY LICENSE PROFESSIONAL IS ILLEGAL"

DESIGNED BY:	DRAWN BY:	CHECKED BY:	REVIEWED BY:
CJM	CJM	JRM	JRM
PROJECT No.: WPSD2401	DATE: MAY 2025	SCALE: AS SHOWN	

CLIENT
White Plains City School District

Renovations at Rochambeau Alternate High School

228 Fisher Avenue
White Plains, NY 10606

SED #66-22-00-01-0-015-020

CONTRACT
CONTRACT P
PLUMBING CONTRACT

STATUS
FINAL BID DOCUMENT

SHEET TITLE
PLUMBING SECOND FLOOR OVERALL DEMOLITION PLAN

DRAWING No.
PD 100.00

X:\WPSD\White Plains Central School District - 1995\WPSD 2401 - Rochambeau Alt HS Renovations\02-BIM-CADD\Cad-Dwgs\12 Plumbing\P 100.00 Plumbing Overall Plan.dwg, Last Modified: May 27, 2025 - 3:08pm Plotted on: May 27, 2025 - 3:10pm By: CMcDermott

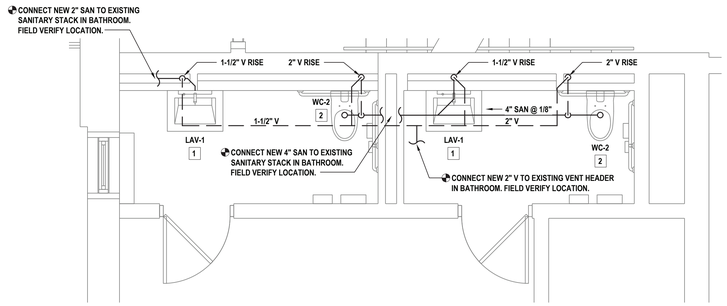

1 **Sanitary and Vent Enlargement Plan of Room 123A and 123B**
SCALE: 3/8" = 1'-0"

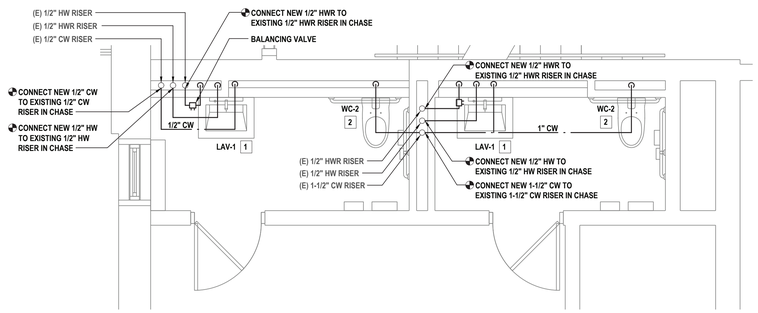

2 **Sanitary and Vent Enlargement Plan of Room 123A and 123B**
SCALE: 3/8" = 1'-0"

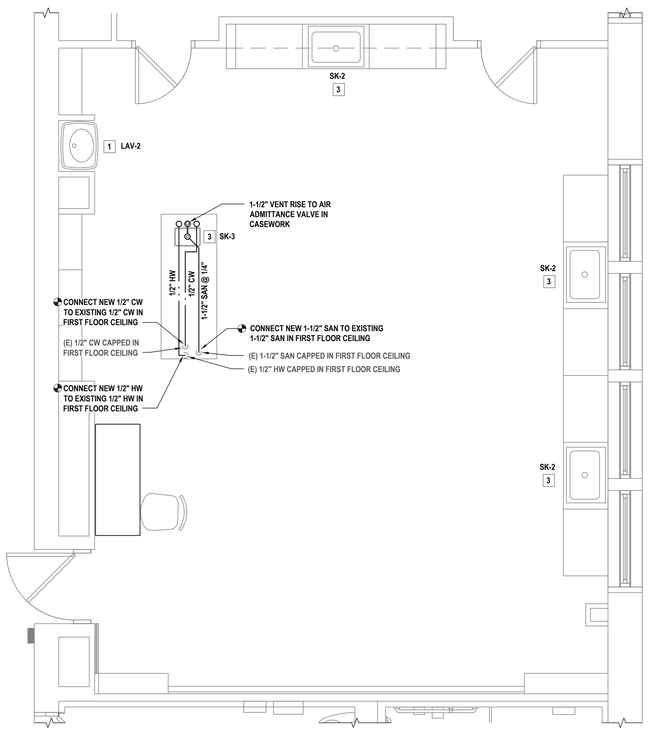

3 **Plumbing Enlargement Plan of Room 322**
SCALE: 3/8" = 1'-0"

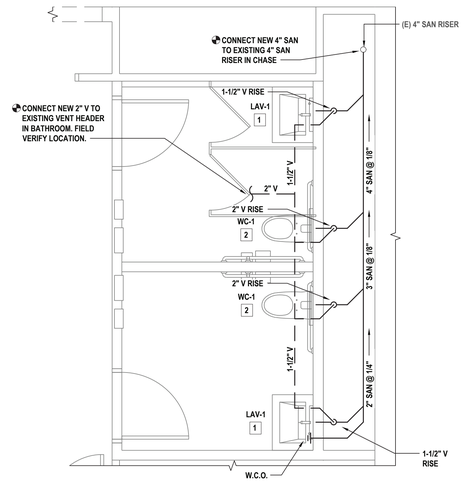

4 **Sanitary and Vent Enlargement Plan of Room 317A and 317B**
SCALE: 3/8" = 1'-0"

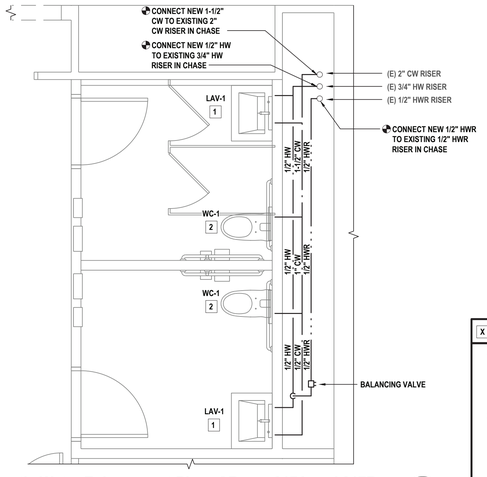

5 **Domestic Water Enlargement Plan of Room 317A and 317B**
SCALE: 3/8" = 1'-0"

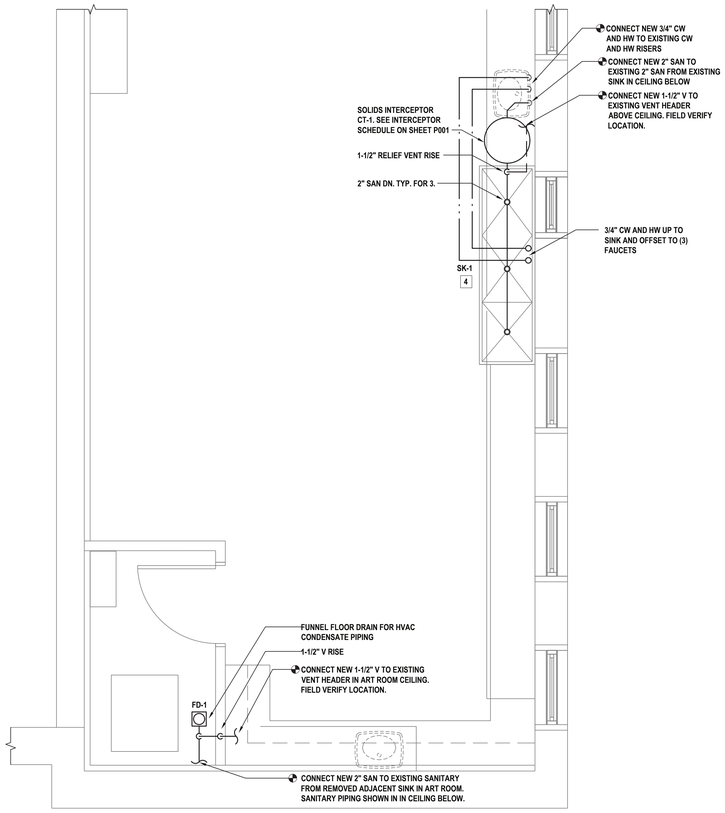

6 **Plumbing Enlargement Plan of Art Room Sink**
SCALE: 3/8" = 1'-0"

X KEYED PLUMBING NOTES

1. PROVIDE NEW LAVATORY/SINK WITH FAUCET. INSTALL 1/2-INCH COLD AND HOT WATER TO FAUCET WITH NEW STOP VALVES AND STAINLESS STEEL FLEXIBLE HOSES. INSTALL 1-1/2-INCH SANITARY AND VENT TO SINK. ADA INSTALLATIONS SHALL INCLUDE INSULATION AROUND THE DRAIN AND SUPPLY PIPING IN EXPOSED PIPING APPLICATIONS BELOW SINK. PROVIDE TEMPERATURE LIMITING DEVICE FOR ON THE HOT WATER LINE TO ALL HAND SINKS AND SET AT 105°F.
2. PROVIDE NEW WATER CLOSET. INSTALL 1-INCH COLD WATER, 3-INCH SANITARY AND 2-INCH VENT TO TOILET WITH WAX SEAL AND SEALANT. FOR WALL MOUNTED FIXTURE, PROVIDE SUPPORT CARRIER AND MOUNT AS PER THE ARCHITECTURAL SPECIFICATIONS.
3. PROVIDE NEW SINK WITH FAUCET AND GAS COCK. PROVIDE NEW ACID NEUTRALIZATION KIT AI-1 WITHIN BASE CABINETRY. INSTALL 1/2-INCH COLD AND HOT WATER TO FAUCET WITH NEW STOP VALVES AND STAINLESS STEEL FLEXIBLE HOSES. INSTALL 1-1/2-INCH SANITARY AND VENT TO SINK AND CONNECT NEW PIPING TO EXISTING ROUGH-INS. INSTALL 3/8" GAS TO NEW GAS COCK. MODIFY PIPING AS REQUIRED. CONTRACTOR RESPONSIBLE FOR PATCHING AND REPAIRING WALL TO MATCH EXISTING CONDITIONS. ADA INSTALLATIONS SHALL INCLUDE INSULATION AROUND THE DRAIN AND SUPPLY PIPING IN EXPOSED PIPING APPLICATIONS BELOW SINK. PROVIDE TEMPERATURE LIMITING DEVICE FOR ON THE HOT WATER LINE TO ALL HAND SINKS AND SET AT 105°F.
4. PROVIDE NEW SINK WITH (3) FAUCETS. INSTALL 3/4-INCH COLD AND HOT WATER TO FAUCETS WITH NEW STOP VALVES AND STAINLESS STEEL FLEXIBLE HOSES. INSTALL 2-INCH SANITARY AND 1-1/2" VENT TO SINK. ADA INSTALLATIONS SHALL INCLUDE INSULATION AROUND THE DRAIN AND SUPPLY PIPING IN EXPOSED PIPING APPLICATIONS BELOW SINK. PROVIDE TEMPERATURE LIMITING DEVICE FOR ON THE HOT WATER LINE TO ALL HAND SINKS AND SET AT 105°F.

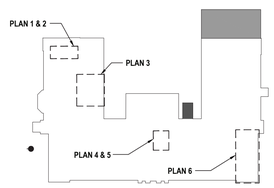

9 **Key Plan**
SCALE: 1/64" = 1'-0"

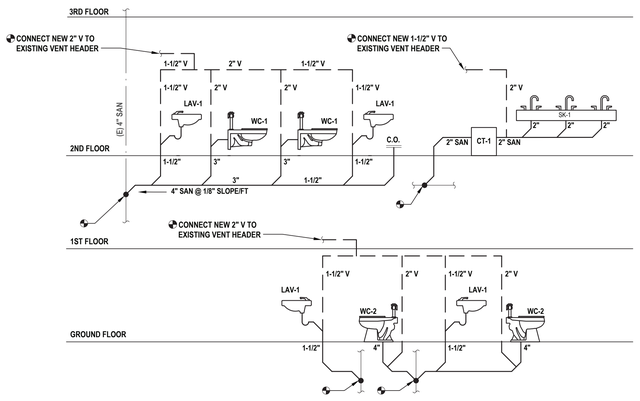

7 **Sanitary and Vent Riser Diagram of Bathroom**
SCALE: NTS

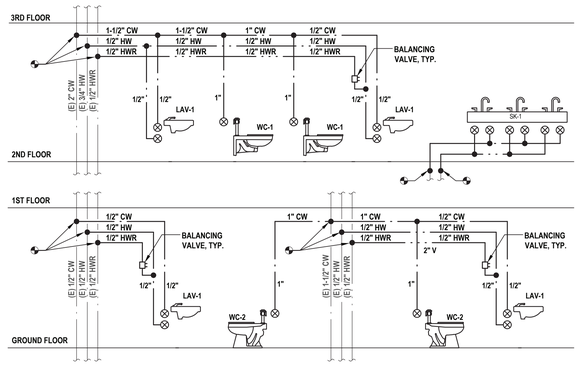

8 **Domestic Riser Diagram of Bathroom**
SCALE: NTS

H 2 M architects + engineers

1133 Westchester Ave., Suite N-210
White Plains, NY 10605
914.358.5623 • www.h2m.com
NY Architecture & Landscape Architecture: No Certificate Required
NY Engineering Certificate of Authorization No. 0018178

CONSULTANTS:

MARK	DATE	DESCRIPTION
0	09-11-24	SED SUBMISSION
1	02-25-25	SED ADDENDUM 1
	05-28-25	FINAL BID SET

STATE OF NEW YORK · JONATHAN RICHARD MURATORE · 086440-1 · LICENSED PROFESSIONAL ENGINEER

10/31/2027
JONATHAN R. MURATORE, P.E. EXP. DATE
NY PROFESSIONAL ENGINEER Lic. No. 086440
"IN ACCORDANCE WITH ARTICLE 145, SECTION 7209 OF THE NYS EDUCATION LAW, ALTERATION OF THIS DOCUMENT EXCEPT BY LICENSE PROFESSIONAL IS ILLEGAL"

DESIGNED BY:	DRAWN BY:	CHECKED BY:	REVIEWED BY:
CJM	CJM	JRM	JRM

PROJECT No.:	DATE:	SCALE:
WPSD2401	MAY 2025	AS SHOWN

CLIENT:
White Plains City School District

Renovations at Rochambeau Alternate High School

228 Fisher Avenue
White Plains, NY 10606

SED #66-22-00-01-0-015-020

CONTRACT
CONTRACT P
PLUMBING CONTRACT

STATUS
FINAL BID DOCUMENT

SHEET TITLE
PLUMBING ENLARGEMENT PLANS AND RISERS

DRAWING No.
P 100.00

X:\WPSD_White Plains Central School District_ - 9999\WPSD 2401 - Rochambeau Alt HS Renovations\02 BIM CAD\Con Docs\12 Plumbing\P 100.00 Enlargement Plans.dwg Last Modified: May 27, 2025 - 3:08pm Printed on: May 27, 2025 - 3:10pm By: CAD\Cernett