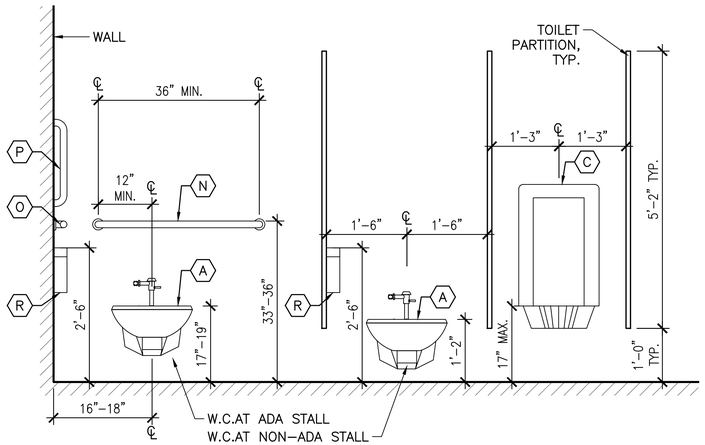

1 TYPICAL TOILET ELEVATION
A-508 SCALE: 3/4"=1'-0"

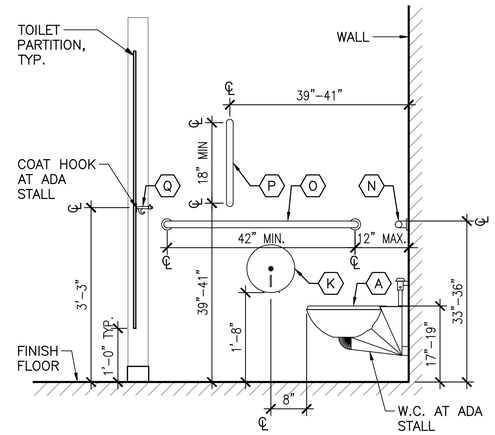

2 TYPICAL ADA TOILET ELEVATION
A-508 SCALE: 3/4"=1'-0"

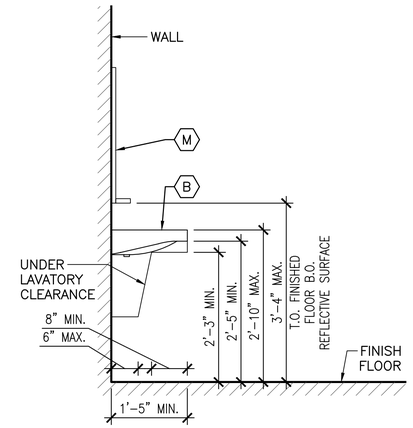

3 TYPICAL ADA LAVATORY ELEVATION
A-508 SCALE: 3/4"=1'-0"

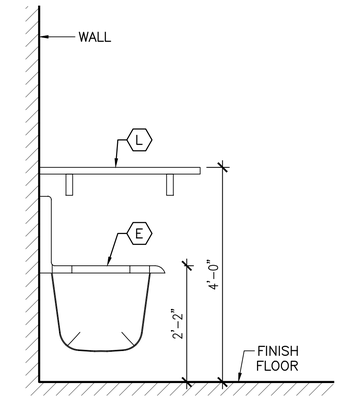

4 TYPICAL JANITOR'S CLOSET ELEVATION
A-508 SCALE: 3/4"=1'-0"

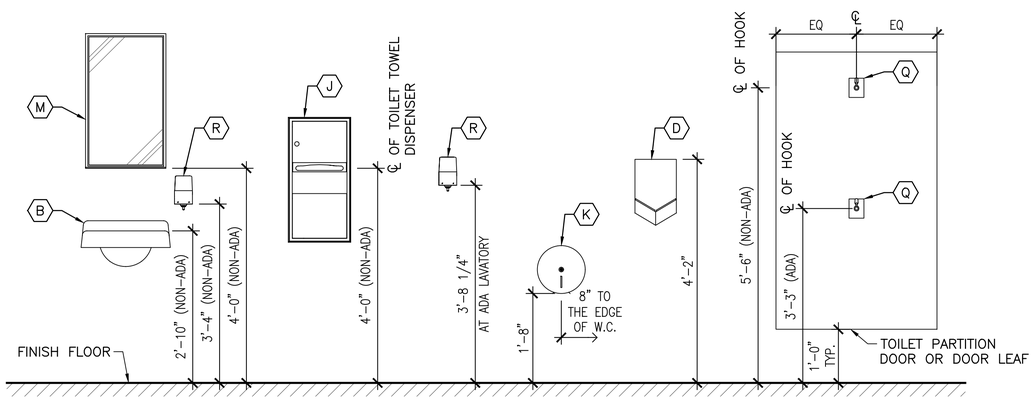

5 TYPICAL TOILET FIXTURE & ACCESORY ELEVATION
A-508 SCALE: 3/4"=1'-0"

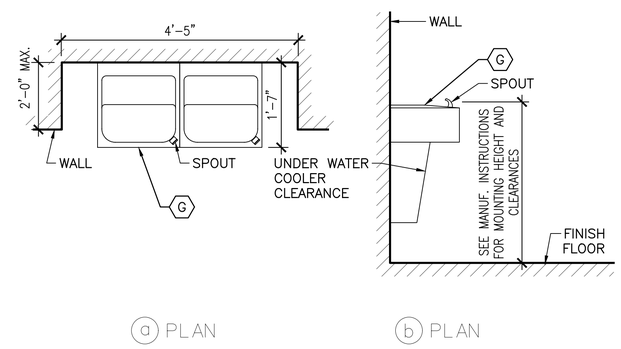

6 TYPICAL WATER COOLER LAYOUT
A-508 SCALE: 3/4"=1'-0"

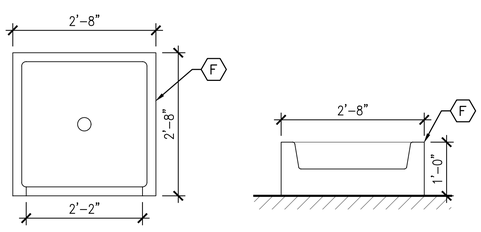

7 MOP SINK PLAN AND ELEVATION
A-508 SCALE: 3/4"=1'-0"

NOTES:

1. REFER TO FIXTURE AND ACCESSORY SCHEDULE ON DWG A-509 FOR ADDITIONAL INFORMATION.

2. WALL ELEVATIONS SHOWN ARE TYPICAL CONDITIONS FOR PURPOSE OF INDICATING THE TYPICAL MOUNTING HEIGHTS OF FIXTURES AND ACCESSORIES. REFER TO ENLARGED PLANS AND INTERIOR ELEVATIONS FOR SPECIFIC CONFIGURATION.

ARCHITECT
di Domenico + Partners LLP
Architecture
Landscape Architecture
Planning
3743 Crescent Street, 3rd Floor
Long Island City, New York 11101
Tel 212-337-0400
Fax 212-337-3567

CIVIL PLANNING ENGINEER
JMC Planning Engineering Landscape Architecture & Land Surveying, PLLC
120 Bedford Road
Armonk, New York 10504
Tel 914-273-5225
Fax 914-273-2102

MEP ENGINEER
BURNS ENGINEERING, PC.
1261 Broadway, Suite 708
New York, New York 10001
Tel 212-962-3503

STRUCTURAL ENGINEER
GEI50
1385 Broadway, 20th FL
New York, New York 10018
Tel 212-687-8282

MANHATTAN BEER DISTRIBUTORS

MANHATTAN BEER DISTRIBUTORS
20 DUNNIGAN DRIVE
SUFFERN, NEW YORK

REV	DESCRIPTION	DATE
–	ISSUED FOR DOB SUBMISSION	9.10.21
–	ISSUED FOR BID	10.15.21
–	ISSUED FOR CONSTRUCTION	11.30.21
–	REVISED BID SET	01.20.22
–	REVISED FOR CONSTRUCTION	04.05.22
–	PER METAL PANEL REDESIGN	07.26.22
–	REVISED FOR CONSTRUCTION	08.15.22

DRAWN BY :	S. WOO
CHECKED BY :	D. TOBAR, R.A.
APPROVED BY :	A. BERGER, R.A.
DATE :	07.30.2021
SCALE :	AS NOTED

DRAWING TITLE :
TYPICAL TOILET ROOM ELEVATIONS AND DETAILS

DWG NUMBER :
A-508